DIST	COUNTY	ROUTE	POST MILES TOTAL PROJECT	SHEET NO.	TOTAL SHEETS

REGISTERED CIVIL ENGINEER

May 1, 2006
PLANS APPROVAL DATE

REGISTERED PROFESSIONAL ENGINEER Dallas Forester No. C37765 Exp. 12-31-06 CIVIL STATE OF CALIFORNIA

The State of California or its officers or agents shall not be responsible for the accuracy or completeness of electronic copies of this plan sheet.

To get to the Caltrans web site, go to: http://www.dot.ca.gov

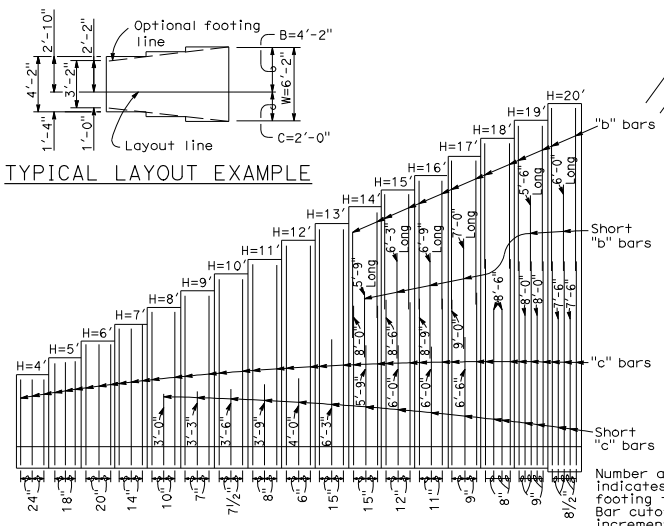

TYPICAL LAYOUT EXAMPLE

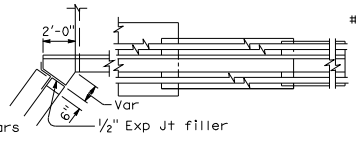

PART PLAN A-A

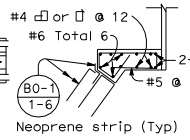

SECTION B-B

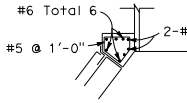

SECTION C-C

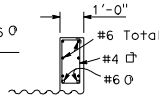

SECTION D-D

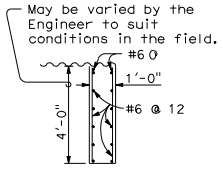

SECTION E-E

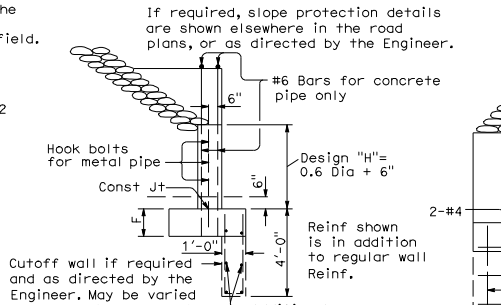

SECTION F-F

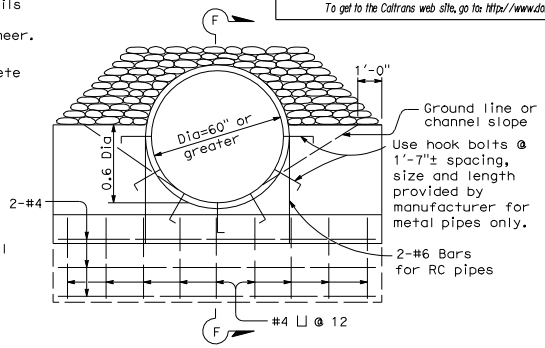

TYPE C WALL

REINFORCED CONCRETE WINGWALLS

Design "H"	4'	5'	6'	7'	8'	9'	10'	11'	12'	13'	14'	15'	16'	17'	18'	19'	20'
W	3'-2"	3'-8"	4'-2"	4'-8"	5'-2"	5'-8"	6'-2"	6'-8"	7'-2"	7'-8"	8'-0"	8'-8"	9'-4"	10'-0"	10'-8"	11'-4"	12'-0"
C	1'-0"	1'-2"	1'-4"	1'-6"	1'-8"	1'-10"	2'-0"	2'-2"	2'-4"	2'-6"	2'-8"	3'-0"	3'-4"	3'-8"	4'-0"	4'-4"	4'-8"
B	2'-2"	2'-6"	2'-10"	3'-2"	3'-6"	3'-10"	4'-2"	4'-6"	4'-10"	5'-2"	5'-4"	5'-8"	6'-0"	6'-4"	6'-8"	7'-0"	7'-4"
F	1'-2"																1'-4"
Batter	None										½:12						
S	1'-0"									1'-6½"	1'-7"	1-7½"	1'-8"	1'-8½"	1'-9"	1'-9½"	1'-10"
"b" bars	None										#5 @ 15	#5 @ 12	#5 @ 11	#5 @ 9	#6 @ 24	#6 @ 18	#7 @ 17
"c" bars	#4 @ 24	#4 @ 18	#5 @ 20	#5 @ 14	#5 @ 10	#5 @ 7	#6 @ 7½	#7 @ 8	#7 @ 6	#9 @ 15	#10 @ 15	#10 @ 12	#10 @ 11	#10 @ 9	#10 @ 8	#11 @ 9	#11 @ 8½
"d" bars	#4 @ 24	#4 @ 18	#5 @ 20	#5 @ 14	#5 @ 10	#6 @ 14	#7 @ 15	#8 @ 16	#7 @ 12	#8 @ 15	#9 @ 15	#9 @ 12	#9 @ 11	#9 @ 9	#9 @ 8	#10 @ 9	#10 @ 8½
Conc CY/LF	0.32	0.38	0.44	0.49	0.55	0.61	0.67	0.73	0.79	1.02	1.10	1.18	1.26	1.36	1.45	1.55	1.72
Reinf LB/LF	13	16	19	25	30	37	49	62	76	73	90	104	123	141	170	189	206

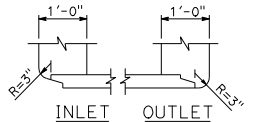

RC PIPE DETAILS

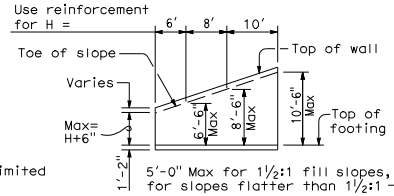

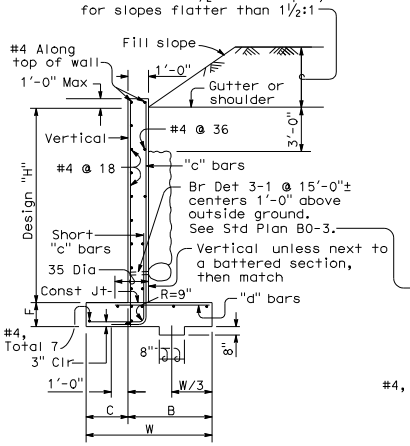

TYPICAL SECTION
H=4' THRU 12'

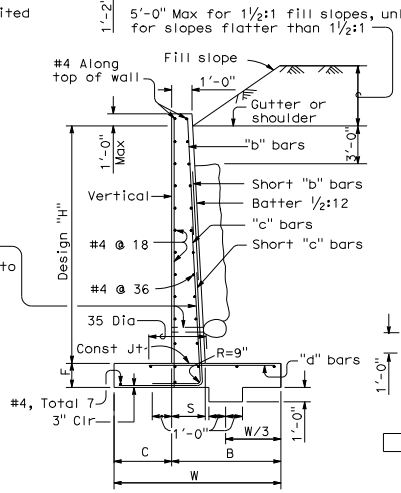

TYPICAL SECTION
H=13' THRU 20'

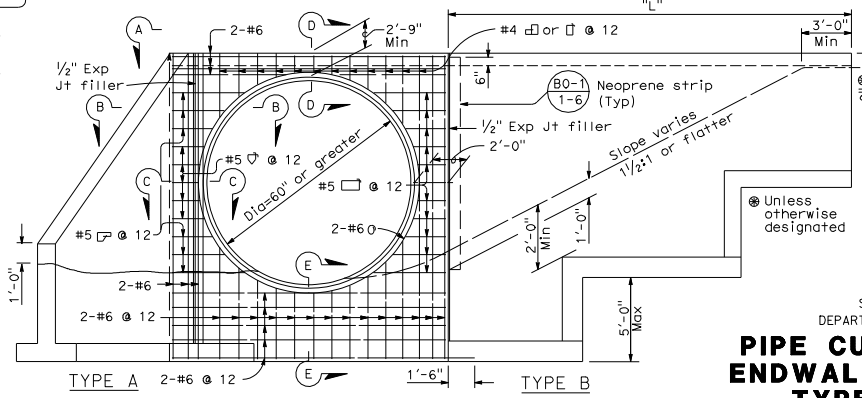

TYPE A

TYPE B

END ELEVATION
STRAIGHT WINGWALLS

For footing step dimensions and reinforcement see "Footing Step" on Std Plan B3-8.

NOTE:

Unit Stresses: f_s = 24,000 psi
f_c = 1,300 psi, n = 10 Maximum
Toe Pressure = 3.0 ksf. Elevation, length and angle of flare of wings may be varied by the Engineer to suit conditions encountered in the field. Walls designed for 2'-0" live load surcharge, 1½:1 sloping surcharge not to exceed 5'-0" in elevation plus 2'-0" live load surcharge, or unlimited 2:1 surcharge. If 1½:1 slope exceeds 5'-0", use Type 2 retaining wall. Wall height may be exceeded by 6" before going to the next greater "H".

STATE OF CALIFORNIA
DEPARTMENT OF TRANSPORTATION

PIPE CULVERT HEADWALLS, ENDWALLS AND WINGWALLS TYPES A, B AND C

NO SCALE

D90

8-8-05

2006 STANDARD PLAN D90