DIST	COUNTY	ROUTE	POST MILES TOTAL PROJECT	SHEET NO.	TOTAL SHEETS

REGISTERED CIVIL ENGINEER

May 1, 2006
PLANS APPROVAL DATE

REGISTERED PROFESSIONAL ENGINEER Dallas Forester No. C37765 Exp. 12-31-06 CIVIL STATE OF CALIFORNIA

The State of California or its officers or agents shall not be responsible for the accuracy or completeness of electronic copies of this plan sheet.

To get to the Caltrans web site, go to: http://www.dot.ca.gov

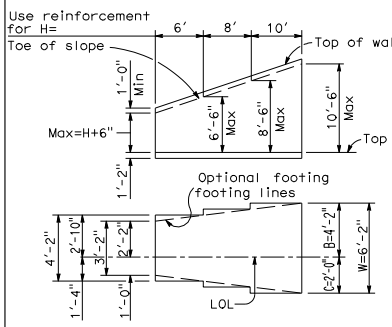

TYPICAL LAYOUT EXAMPLE

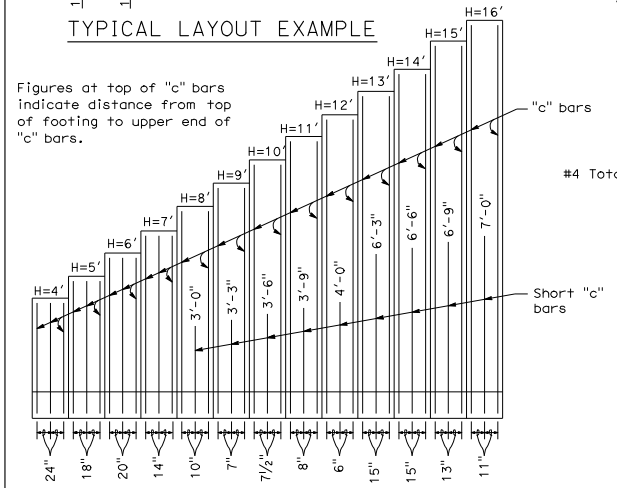

NOTE:

Where 1½:1 surcharge exceeds 5'-0", use Type 2 Retaining Wall.

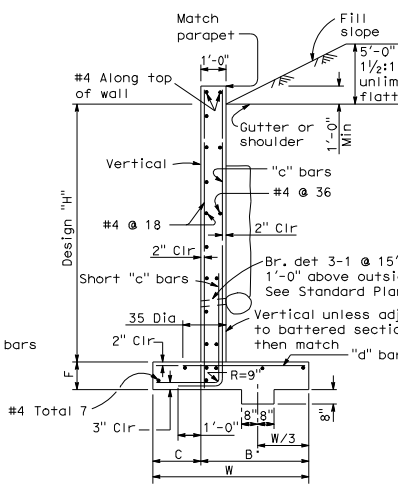

TYPICAL SECTION
H=4' THRU 12'

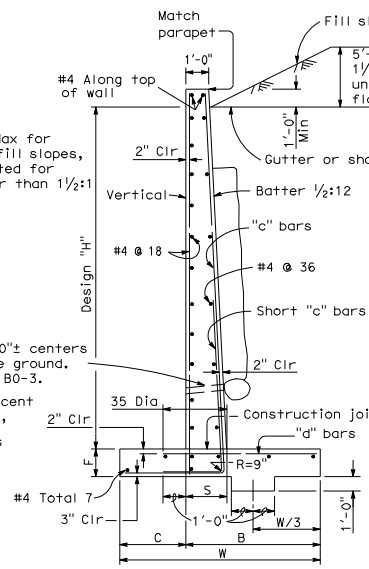

TYPICAL SECTION
H=13' THRU 16'

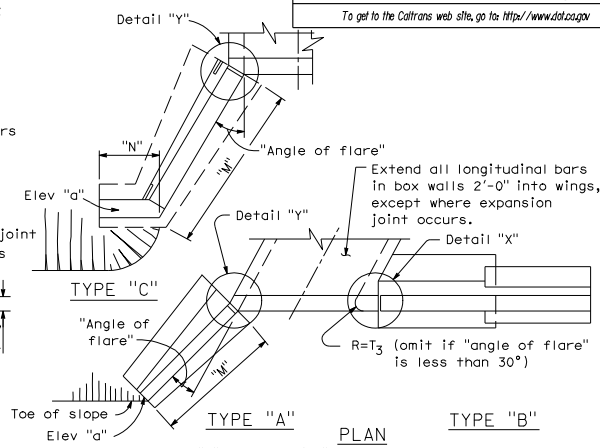

Where design "H" exceeds 9'-0" or length of wingwall exceeds 1.5 "H", place ½" Exp joint filler at junction of box and wall.

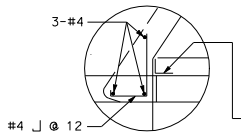

DETAIL "X"

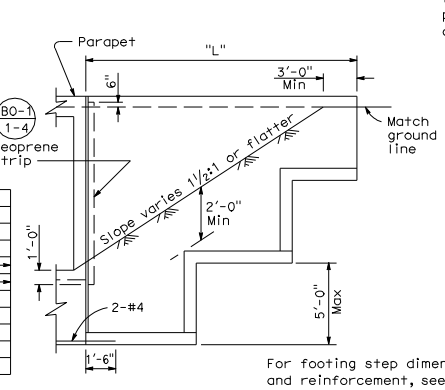

ELEVATION

For footing step dimensions and reinforcement, see "Footing Step" on Std Plan B3-8.

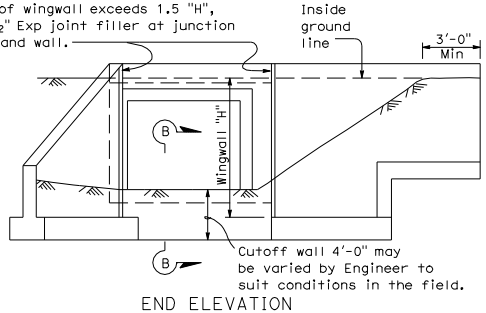

END ELEVATION

TYPE "A" TYPE "B"

STRAIGHT WINGWALLS

REINFORCED CONCRETE WINGWALLS

"H"	4'	5'	6'	7'	8'	9'	10'	11'	12'	13'	14'	15'	16'
W	3'-2"	3'-8"	4'-2"	4'-8"	5'-2"	5'-8"	6'-2"	6'-8"	7'-2"	7'-8"	8'-2"	8'-8"	9'-2"
C	1'-0"	1'-2"	1'-4"	1'-6"	1'-8"	1'-10"	2'-0"	2'-2"	2'-4"	2'-6"	2'-8"	2'-10"	3'-0"
B	2'-2"	2'-6"	2'-10"	3'-2"	3'-6"	3'-10"	4'-2"	4'-6"	4'-10"	5'-2"	5'-6"	5'-10"	6'-2"
F	1'-2"												
Batter	None									½:12			
S	1'-0"	1'-0"	1'-0"	1'-0"	1'-0"	1'-0"	1'-0"	1'-0"	1'-0"	1'-6½"	1'-7"	1'-7½"	1'-8"
"c" Bars	#4@24	#4@18	#5@20	#5@14	@5@10	#5@7	#6@7½	#7@8	#7@6	#9@15	#10@15	#10@13	#10@11
"d" Bars	#4@24	#4@18	#5@20	#5@14	@5@10	#6@14	#7@15	#8@16	#7@12	#8@15	#9@15	#9@13	#9@11
Conc CY/LF	0.32	0.38	0.44	0.49	0.55	0.61	0.67	0.73	0.79	1.02	1.10	1.18	1.26
Reinf LB/LF	13	16	19	25	30	37	49	62	76	73	90	104	125

Quantities do not include that portion above the design "H" limit.

NOTES:

Unit Stresses: f_s =24,000 psi, f_c =1300 psi, n=10

Maximum Toe Pressure = 1½ Tons/SQFT

Elevations, length and angle of flare of wings may be varied by the Engineer to suit conditions encountered in the field. Walls designed for 2'-0" liveload surcharge, 1½:1 sloping surcharge not to exceed 5'-0" in elevation plus 2'-0" liveload surcharge, or unlimited 2:1 surcharge.

Dimensions "H","L","M","N", Elevation "a" and "Angle of flare" (as apply) are shown on the plans.

Wall height may be exceeded by 6" before going to next greater "H".

Eliminate cutoff wall if adjacent channel is paved and skew is 20° maximum.

For wall offset values, see Standard Plan B3-8.

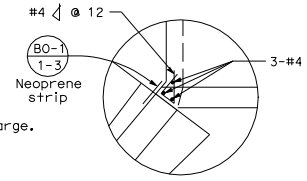

DETAIL "Y"

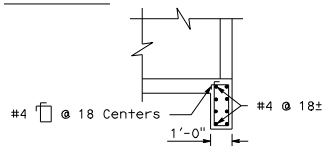

SECTION B-B

STATE OF CALIFORNIA
DEPARTMENT OF TRANSPORTATION

BOX CULVERT WINGWALLS TYPES A, B AND C

NO SCALE

D84

2006 STANDARD PLAN D84

8-8-05