| DIST | COUNTY | ROUTE | POST MILES TOTAL PROJECT | SHEET NO. | TOTAL SHEETS |
|---|---|---|---|---|---|
| | | | | | |

REGISTERED CIVIL ENGINEER

May 1, 2006
PLANS APPROVAL DATE

REGISTERED PROFESSIONAL ENGINEER Glenn DeCou No. C34547 Exp. 9-30-07 CIVIL STATE OF CALIFORNIA

*The State of California or its officers or agents shall not be responsible for the accuracy or completeness of electronic copies of this plan sheet.*

*To get to the Caltrans web site, go to: http://www.dot.ca.gov*

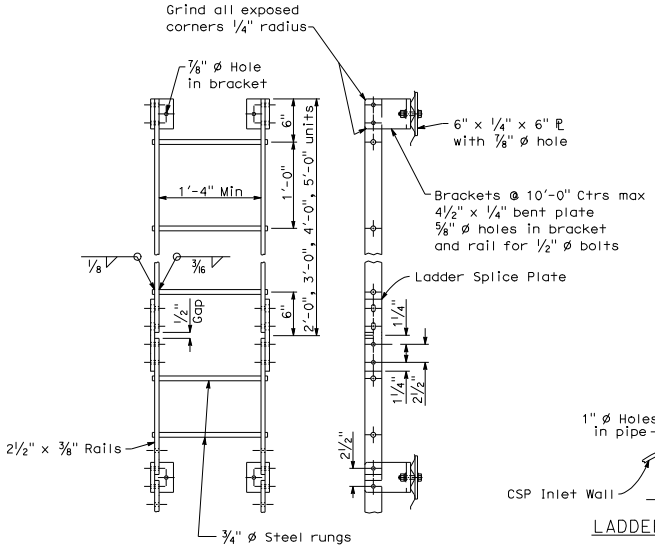


LADDER DETAILS
See Notes 1, 2, 3, 4 and 6

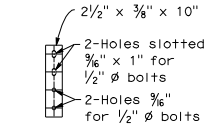


LADDER SPLICE PLATE
(See Notes 4 and 6)

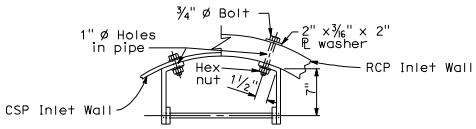


LADDER CONNECTION TO INLET

## NOTES:

1. Ladders and Steps - None required where "H" dimension of pipe inlet is less than 2'-6". Where "H" is 2'-6" or more, install steps or ladder with lowest rung not more than 1'-0" above the floor and highest rung not more than 1'-0" below top of inlet. The distance between steps or rungs shall not exceed 1'-0" and shall be uniform throughout the length of the wall. Place steps or ladder in the wall without an opening.
2. Ladder may be constructed in one length at contractor's option on RCP inlet.
3. On CSP inlet, connect ladder splice plate so joint can compress 1/2".
4. Ladder splice plate to be connected with 1/2" ø bolts with double nuts.
5. Trash racks used on Type OCPI and OMPI inlets. Trash racks required for pumping installations.
6. All hardware to be galvanized after fabrication. See Standard Specifications or Special Provisions.

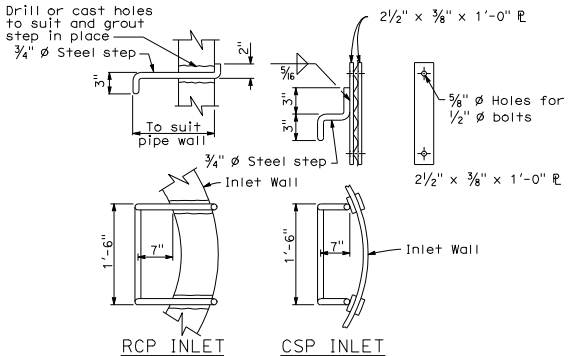


RCP INLET CSP INLET

STEP DETAILS
(See Notes 1 and 6 )

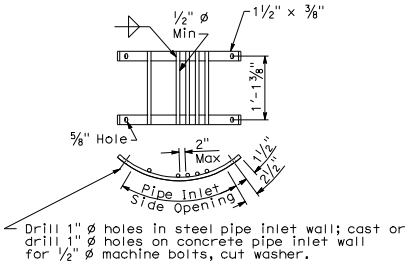


TRASH RACK DETAILS
(See Notes 5 and 6)

STATE OF CALIFORNIA
DEPARTMENT OF TRANSPORTATION

# PIPE INLETS LADDER AND TRASH RACK DETAILS

NO SCALE

**D75C**

2-6-06

**2006 STANDARD PLAN D75C**