DIST	COUNTY	ROUTE	POST MILES TOTAL PROJECT	SHEET NO.	TOTAL SHEETS

REGISTERED CIVIL ENGINEER

May 1, 2006
PLANS APPROVAL DATE

REGISTERED PROFESSIONAL ENGINEER Glenn DeCou No. C34547 Exp. 9-30-07 CIVIL STATE OF CALIFORNIA

The State of California or its officers or agents shall not be responsible for the accuracy or completeness of electronic copies of this plan sheet.

To get to the Caltrans web site, go to: http://www.dot.ca.gov

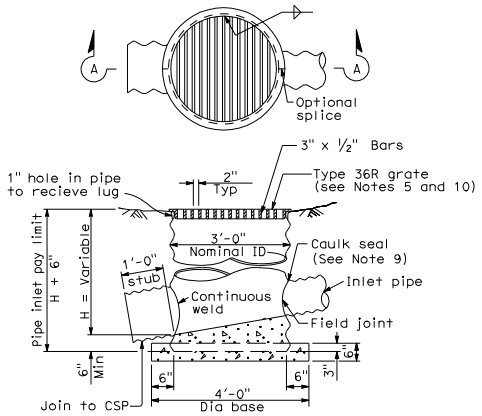

SECTION A-A

TYPE GMP

STEEL PIPE INLET WITH GRATE

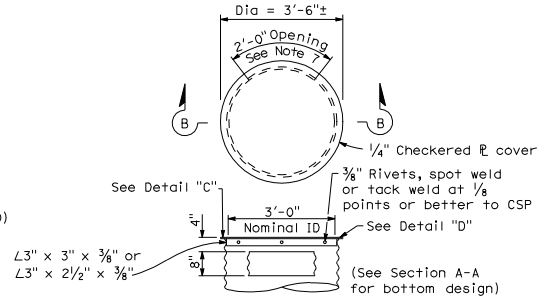

SECTION B-B

TYPE OMP or OMPI

STEEL PIPE INLET WITH SIDE OPENING AND STEEL COVER (See Note 6)

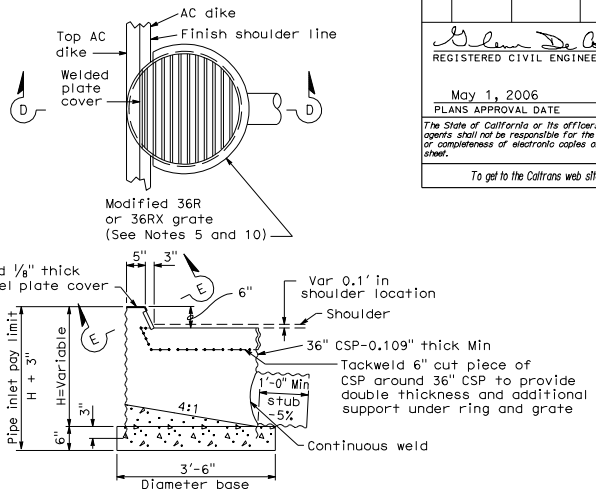

SECTION D-D

TYPE ODI

STEEL PIPE INLET WITH GRATE AND RAISED OPENING AT AC DIKE FLOWLINE

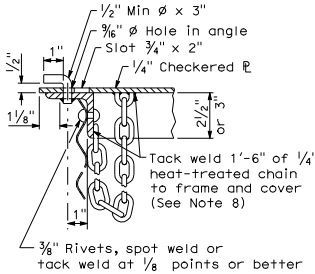

DETAIL "C"

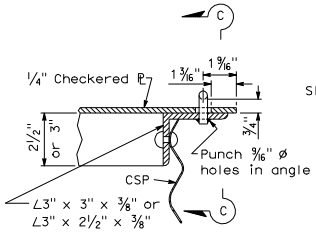

DETAIL "D"

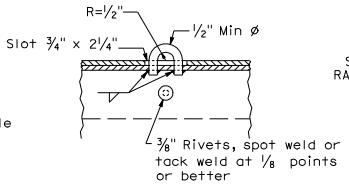

SECTION C-C

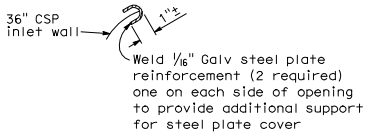

SECTION E-E

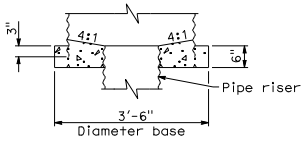

TYPE ODI BASE DETAIL FOR PIPE RISER CONNECTION

NOTES:

1. For Details of concrete pipe inlets, see Standard Plan D75B.
2. For details of ladder and steps and when ladder or steps are required, see Standard Plan D75C.
3. Inlet pipes shall not protrude into basin.
4. Except for inlets used for junction boxes, basin floors shall have minimum slope of 4:1 from all directions toward outlet pipe, and a wood trowel finish.
5. See Standard Plans D77A and D77B for Grate and Frame Details and weights of Miscellaneous Iron and Steel.
6. Designation of Type OMPI pipe inlets on plans indicates trash racks are to be furnished and installed on all side openings. See Standard Plan D75C for trash rack details.
7. More than one side opening may be required. Location and number as ordered by the Engineer.
8. Chain to be provided when specified.
9. Caulk seal with pliable mixture of sand, portland cement, and emulsified asphalt (Mixture of 1 part portland cement, 3-5 parts sand, and 1½" parts SSI emulsified asphalt).
10. Place pipe so bars of grate will be parallel with main surface flow.

STATE OF CALIFORNIA
DEPARTMENT OF TRANSPORTATION

STEEL PIPE INLETS

NO SCALE

D75A

2006 STANDARD PLAN D75A

1-17-06