DIST	COUNTY	ROUTE	POST MILES TOTAL PROJECT	SHEET NO.	TOTAL SHEETS

REGISTERED CIVIL ENGINEER

May 1, 2006
PLANS APPROVAL DATE

REGISTERED PROFESSIONAL ENGINEER Douglas J. Dunnuck No. C47240 Exp. 12-31-07 CIVIL STATE OF CALIFORNIA

The State of California or its officers or agents shall not be responsible for the accuracy or completeness of electronic copies of this plan sheet.

To get to the Caltrans web site, go to: http://www.dot.ca.gov

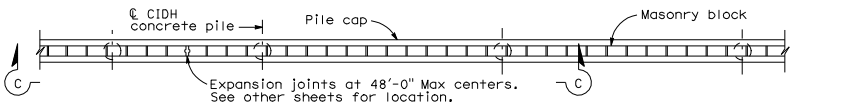

PLAN

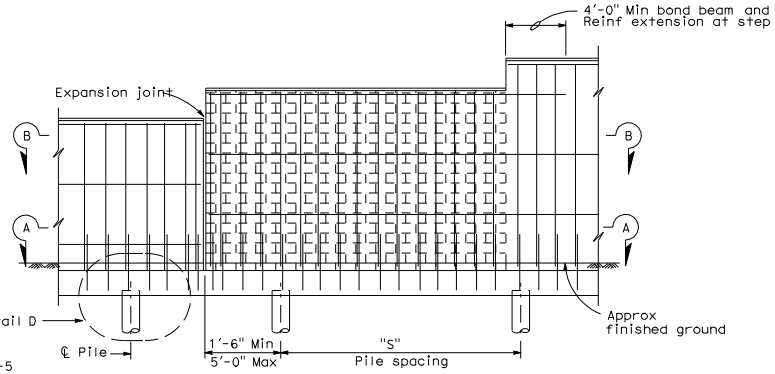

NOTE:
For "Detail D", see Standard Plan B15-5

ELEVATION C-C

Note I : For details not shown, see Standard Plan B14-4 and B14-5.

Note II: See Standard Plans B15-9 for other details.

SOUND WALL REINFORCEMENT TABLE

Maximum "H"	ⓐ bars @ 1'-4" Max	ⓑ bars @ 1'-4" Max	"Y"	f'm (psi)	Compressive Strength of CMU (psi)	Maximum "H"
6'-0"	#4	——	——	1500	1900	6'-0"
8'-0"	#4	——	——	1500	1900	8'-0"
10'-0"	#4	——	——	1500	1900	10'-0"
12'-0"	#5	#4	6'-0"	1500	1900	12'-0"
14'-0"	#6	#4	8'-0"	1500	1900	14'-0"
16'-0"	#6	#4	10'-0"	2000	2800	16'-0"

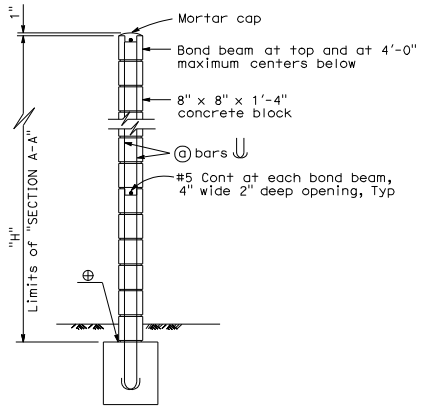

H=6'-0" THRU H=10'-0"

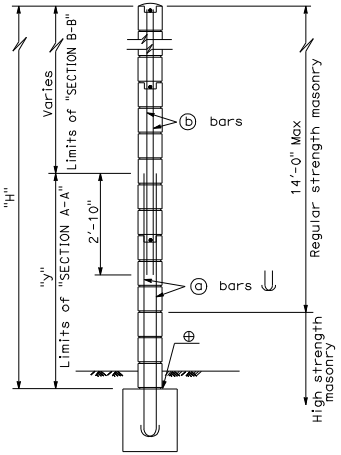

H=12'-0" THRU H=16'-0"

For details not shown, see H=6'-0" thru H=10'-0".

TYPICAL SECTION

⊕ Full mortar bed at bottom of wall.

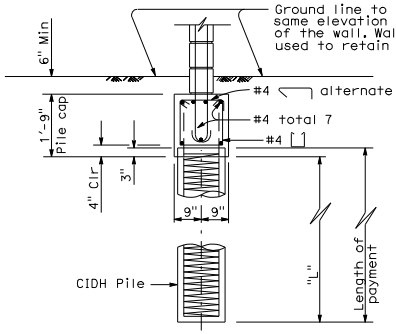

CASE 1

For details not shown, see Case 2.
Level ground (±10%) on one side of the sound wall.

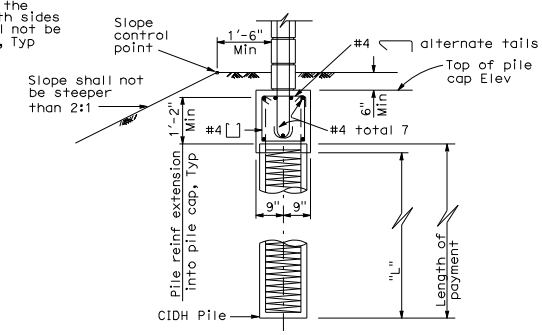

CASE 2

For details not shown, see Case 1.
Level ground (±10%) on one side of the sound wall and sloping ground on the opposite side.

PILE CAP SECTION

STATE OF CALIFORNIA
DEPARTMENT OF TRANSPORTATION

SOUND WALL MASONRY BLOCK ON PILE CAP DETAILS (1)

NO SCALE

B15-3

2006 STANDARD PLAN B15-3

2-14-06