DIST	COUNTY	ROUTE	POST MILES TOTAL PROJECT	SHEET NO.	TOTAL SHEETS

REGISTERED CIVIL ENGINEER

May 1, 2006

PLANS APPROVAL DATE

REGISTERED PROFESSIONAL ENGINEER — Tiliat Satter — No. C42892 — Exp. 03-31-08 — CIVIL — STATE OF CALIFORNIA

The State of California or its officers or agents shall not be responsible for the accuracy or completeness of electronic copies of this plan sheet.

To get to the Caltrans web site, go to: http://www.dot.ca.gov

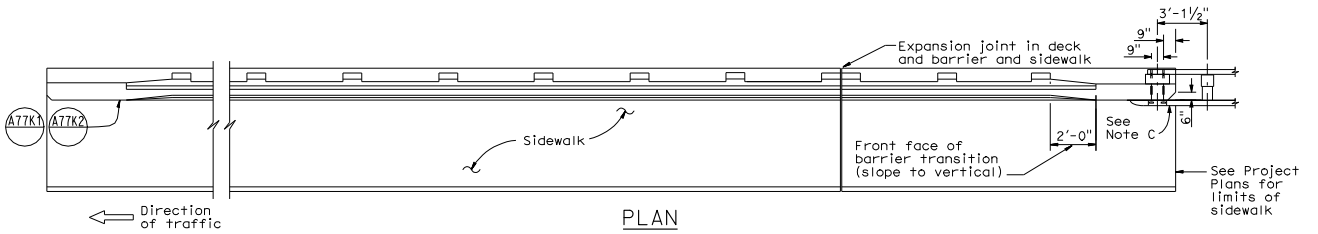

PLAN

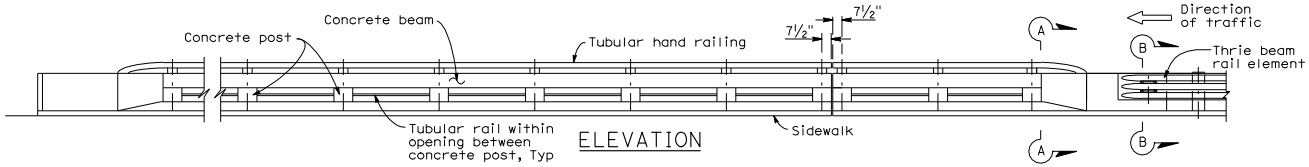

ELEVATION

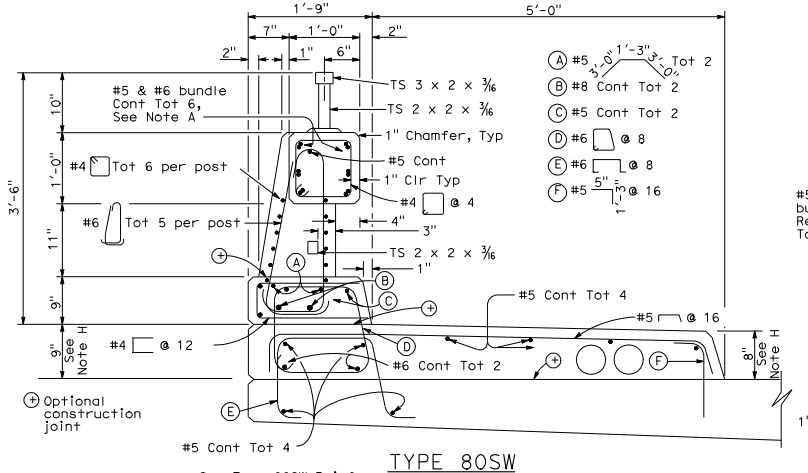

TYPE 80SW

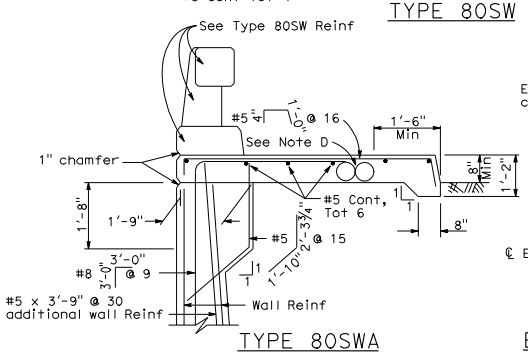

TYPE 80SWA

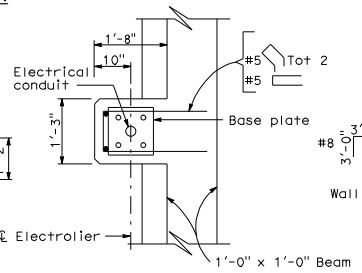

PLAN VIEW

ELECTROLIER PEDESTAL

* Begin barrier transition
** End barrier transition

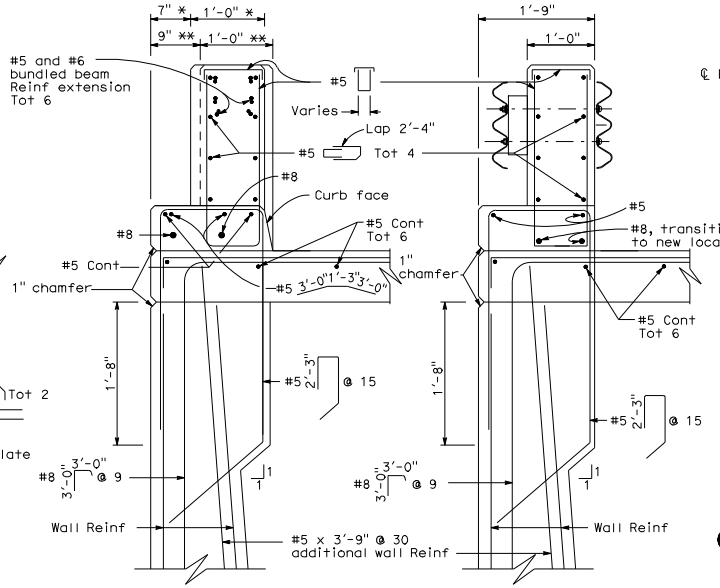

SECTION A-A
(Tubular hand railing not shown)

SECTION B-B

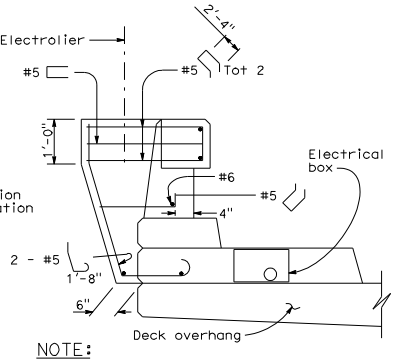

NOTE:
Pedestal design for 1'-0" base plate.

BARRIER MODIFICATION FOR ELECTROLIER

NOTES:

A. No lap splicing allowed on the longitudinal rail reinforcing. Splicing shall be staggered.

B. For electrical details, see Standard Plans ES-9A, ES-9B, ES-9C, ES-9D and ES-9E. See Project Plans for electrical layout.

C. For typical metal railing connection details not shown, see Standard Plans A77K1 and A77K2.

D. A minimum of two - 5" round openings are required for future utilities in addition to those on other plan sheets. Openings are to be sealed at ends and extended 8" minimum past end of sidewalk if not used. Duct forms are to be tied down.

E. Chain link railing is not allowed on Type 80SW Barrier.

F. Walls are to be backfilled before railing is placed.

G. Terminate all longitudinal curb, sidewalk, and deck reinforcement in standard 90° hooks.

H. Dimensions will vary with cross slope and with certain thickness of surfacing.

I. Expansion joint to match deck joint, see Standard Plan B11-63 for expansion joint details.

J. This barrier is to be used only for speeds of 45 MPH or less. For speeds greater than 45 MPH, pedestrians should be protected by a separation traffic barrier.

STATE OF CALIFORNIA
DEPARTMENT OF TRANSPORTATION

CONCRETE BARRIER TYPE 80SW (SHEET 1 OF 3)

NO SCALE

B11-62

2006 STANDARD PLAN B11-62

1-27-06