DIST	COUNTY	ROUTE	POST MILES TOTAL PROJECT	SHEET NO.	TOTAL SHEETS

REGISTERED CIVIL ENGINEER

May 1, 2006
PLANS APPROVAL DATE

REGISTERED PROFESSIONAL ENGINEER
Tiliat Satter
No. C42892
Exp. 03-31-08
CIVIL
STATE OF CALIFORNIA

The State of California or its officers or agents shall not be responsible for the accuracy or completeness of electronic copies of this plan sheet.

To get to the Caltrans web site, go to: http://www.dot.ca.gov

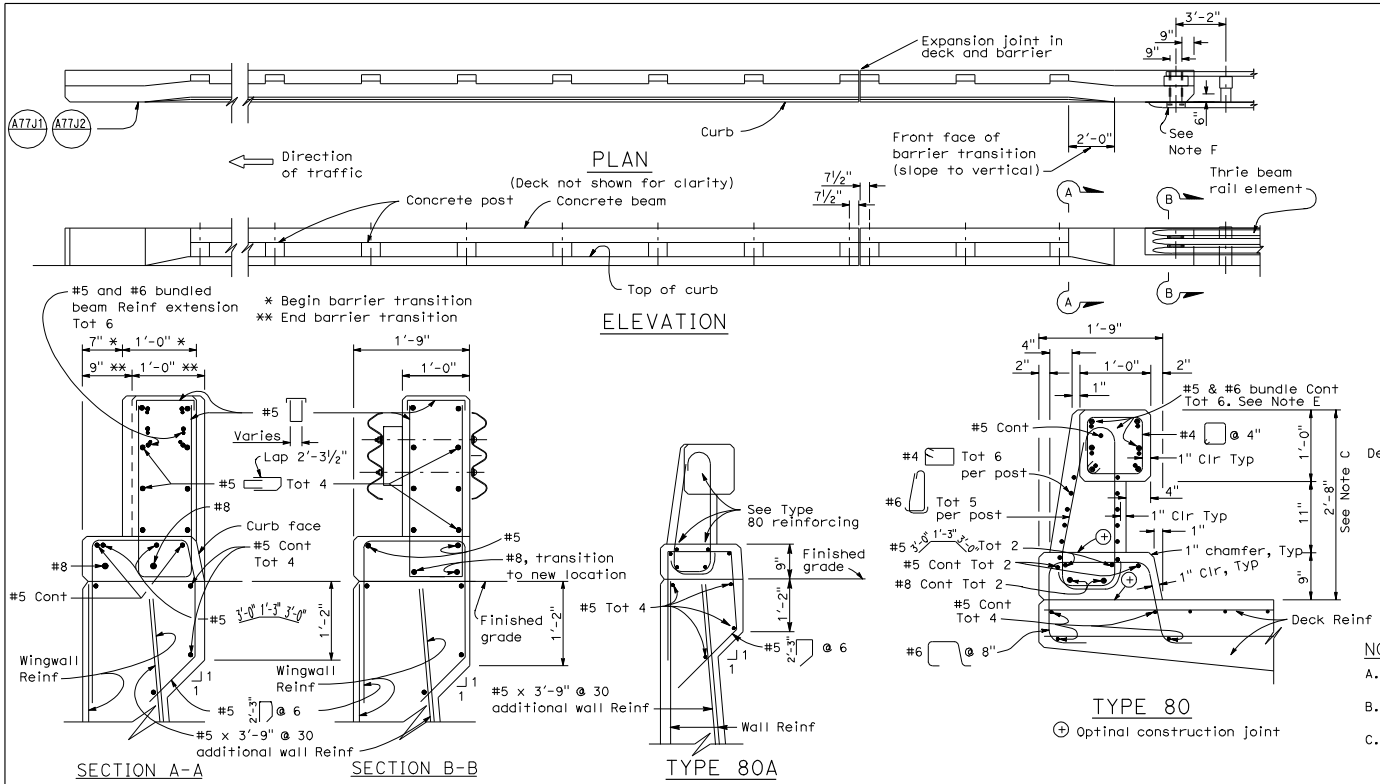

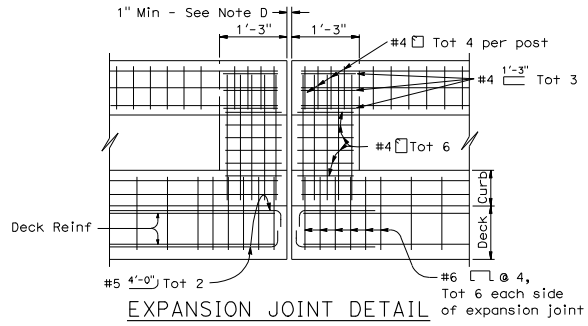

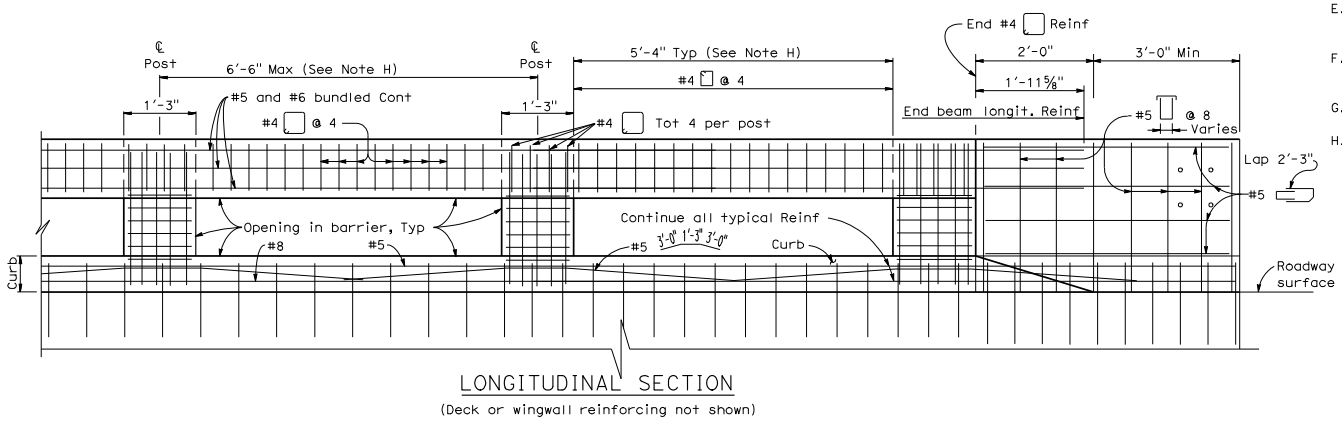

NOTES:

A. Walls are to be backfilled before the barrier is placed.

B. Longitudinal reinforcing steel to stop at all expansion joints.

C. The front face dimensions are to be constant above the finish roadway profile, but the overall height will vary with certain thicknesses of surfacing and roadway slopes.

D. Expansion joint to match deck joint.

E. No lap splicing allowed on the longitudinal rail reinforcing. Splicing shall be staggered.

F. For typical metal railing connection details not shown, see Standard Plans A77J1 and A77J2.

G. Chain link railing is not allowed on Type 80 Barriers.

H. Post to be spaced equally, typically 6'-6" spacing. Post spacing may be reduced where location of hinges or expansion joints or the length of wingwalls will not accommodate the 6'-6" spacing. Maximum see-through availability is to be strived for, where 6'-6" post spacing can not be achieved.

STATE OF CALIFORNIA
DEPARTMENT OF TRANSPORTATION

CONCRETE BARRIER TYPE 80 (SHEET 1 OF 2)

NO SCALE

B11-60

2006 STANDARD PLAN B11-60

2-7-06