DIST	COUNTY	ROUTE	POST MILES TOTAL PROJECT	SHEET NO.	TOTAL SHEETS

REGISTERED CIVIL ENGINEER

May 1, 2006
PLANS APPROVAL DATE

REGISTERED PROFESSIONAL ENGINEER — Tiliat Satter — No. C42892 — Exp. 03-31-08 — CIVIL — STATE OF CALIFORNIA

The State of California or its officers or agents shall not be responsible for the accuracy or completeness of electronic copies of this plan sheet.

To get to the Caltrans web site, go to: http://www.dot.ca.gov

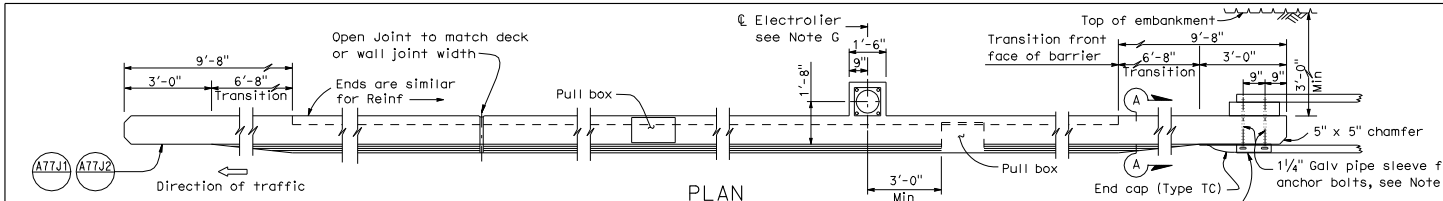

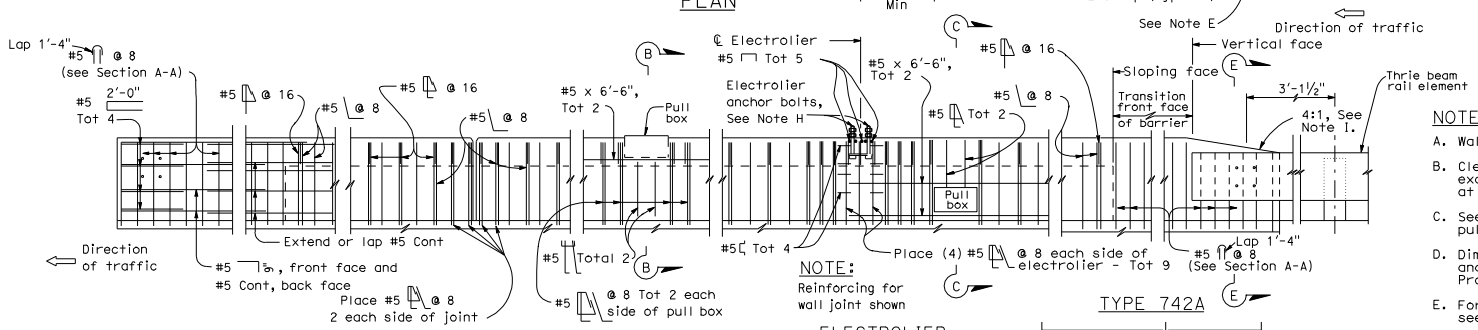

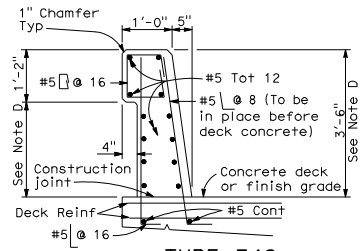

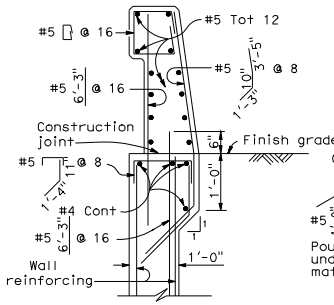

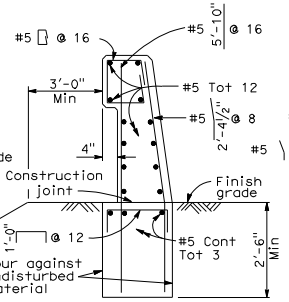

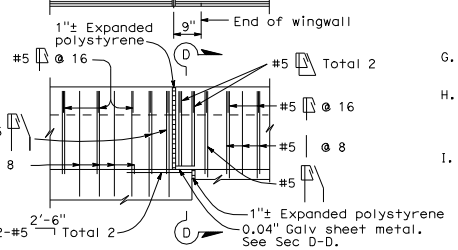

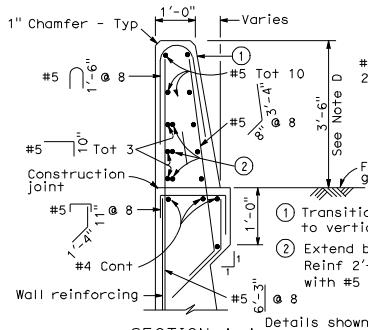

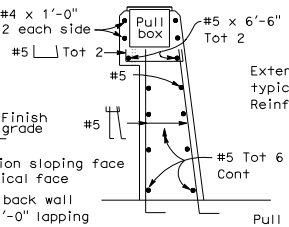

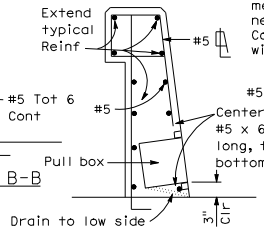

NOTE:
Types 742A & 742B are similar to Type 742 except as noted

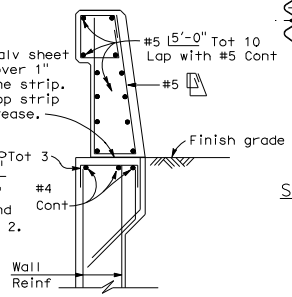

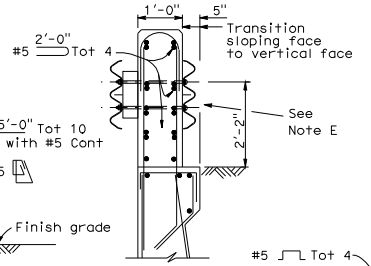

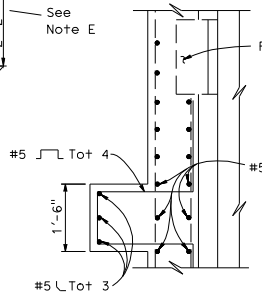

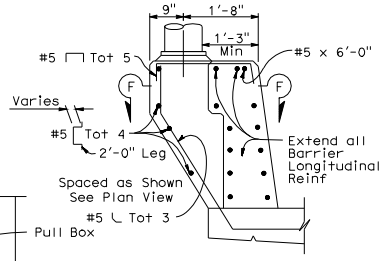

NOTES:

A. Walls are to be backfilled before barrier is placed.

B. Clearance to reinforcing steel in barrier to be 1", except as noted. Longitudinal reinforcement to stop at all expansion joints.

C. See Project Plans for locations of electroliers and pull boxes.

D. Dimensions may vary with roadway cross slope and with certain thickness of surfacing. See Project Plans.

E. For typical metal railing connection details not shown, see Standard Plans A77J1 and A77J2.

F. See Standard Plans ES-9A, ES-9B, ES-9C, ES-9D and ES-9E for electrical details. The maximum number of conduits in the barrier is limited to two (2) 2" conduits along with one (1) 3" conduit. When a 3" conduit is used, it is restricted to the base of the barrier.

G. For electrolier mounting details, See Standard Plans ES-6A and ES-6B.

H. Minimum concrete edge distance, to the reinforcing shown, shall be maintained. Edge distance may be adjusted to accommodate increase in concrete cover for architectual treatment.

I. Taper the top of the end of the bridge railing at 4:1 to match the top elevation of the thrie beam rail element.

STATE OF CALIFORNIA
DEPARTMENT OF TRANSPORTATION

CONCRETE BARRIER TYPE 742

NO SCALE

B11-57

2-7-06

2006 STANDARD PLAN B11-57