DIST	COUNTY	ROUTE	POST MILES TOTAL PROJECT	SHEET NO.	TOTAL SHEETS

REGISTERED CIVIL ENGINEER

May 1, 2006
PLANS APPROVAL DATE

REGISTERED PROFESSIONAL ENGINEER — Tiliat Satter — No. C42892 — Exp. 03-31-08 — CIVIL — STATE OF CALIFORNIA

The State of California or its officers or agents shall not be responsible for the accuracy or completeness of electronic copies of this plan sheet.

To get to the Caltrans web site, go to: http://www.dot.ca.gov

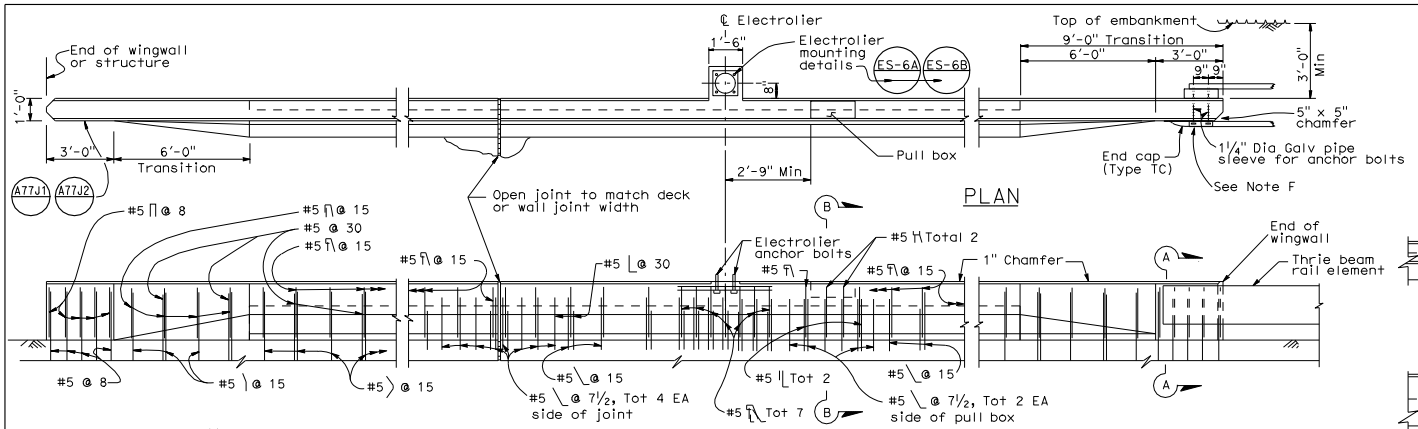

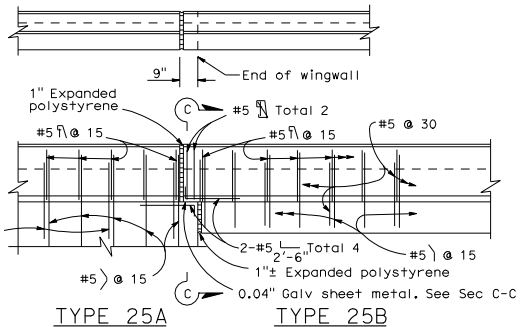

Type 25A and 25B details are similar to Type 25 except as noted.

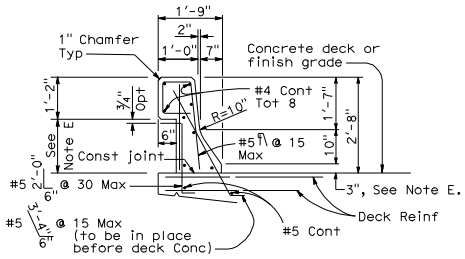

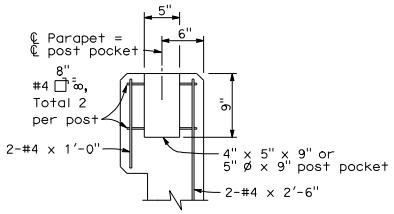

Applies to Chain Link Railing Type 7 and Tubular Hand Railing. See respective Standard Plans for additional details.

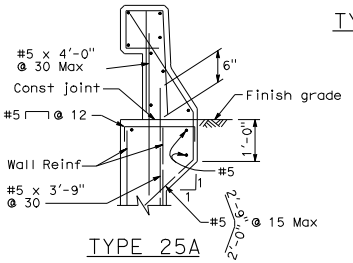

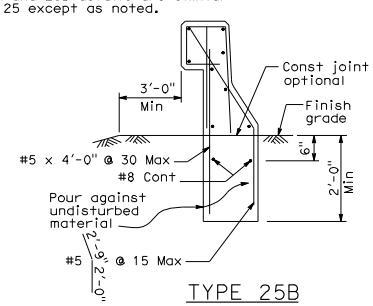

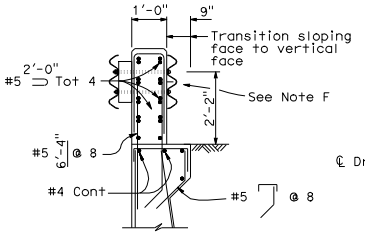

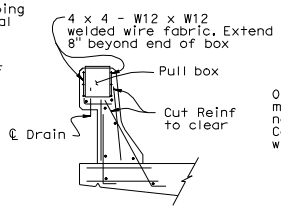

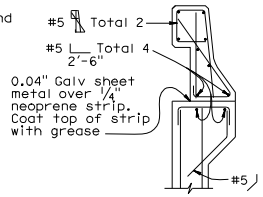

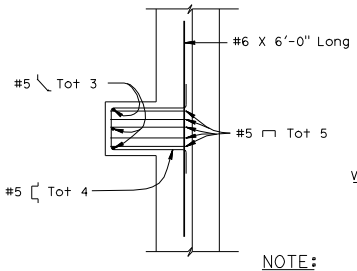

NOTE:
Reinforcing shown is in addition to Type 25 Barrier reinforcing.

PEDESTAL

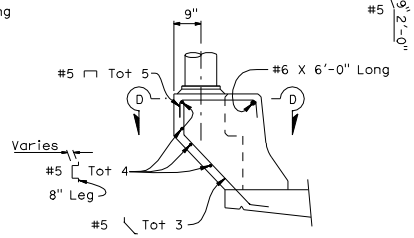

NOTES:

A. Walls are to be backfilled before barrier is placed.

B. Clearance to reinforcing steel in barrier to be 1", except as noted. Longitudinal reinforcement to stop at all expansion joints.

C. See Project Plans for electrolier locations and pull box type.

D. For electrical details, see Standard Plans ES-9A, 9B, 9C, 9D, and 9E.

E. Dimensions may vary with cross slope and with certain thickness of surfacing. See Project Plans.

F. For typical metal railing connection details not shown, see Standard Plans A77J1 and A77J2.

STATE OF CALIFORNIA
DEPARTMENT OF TRANSPORTATION

CONCRETE BARRIER TYPE 25

NO SCALE

B11-53

2-7-06

2006 STANDARD PLAN B11-53