DIST	COUNTY	ROUTE	POST MILES TOTAL PROJECT	SHEET NO.	TOTAL SHEETS

REGISTERED CIVIL ENGINEER

May 1, 2006
PLANS APPROVAL DATE

REGISTERED PROFESSIONAL ENGINEER C.J. Sims No. C46471 Exp. 6-30-07 CIVIL STATE OF CALIFORNIA

The State of California or its officers or agents shall not be responsible for the accuracy or completeness of electronic copies of this plan sheet.

To get to the Caltrans web site, go to: http://www.dot.ca.gov

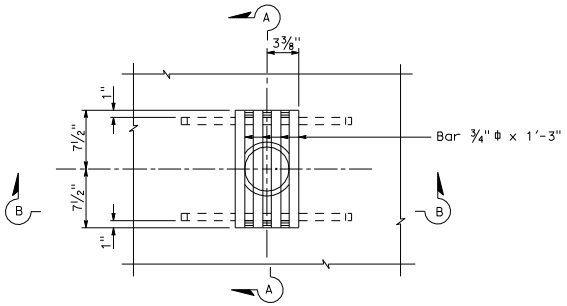

PLAN

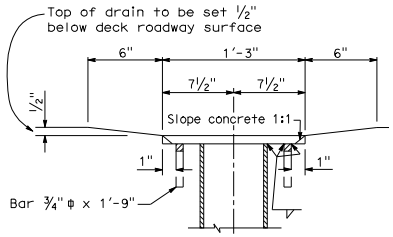

SECTION A-A

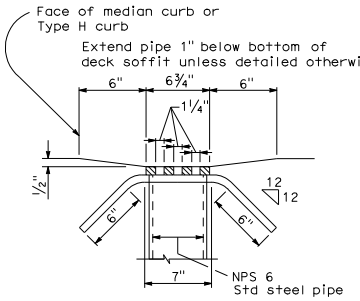

SECTION B-B

NOTE:
Galvanize drain after fabrication.

DRAIN - TYPE "A" DETAIL 7-1

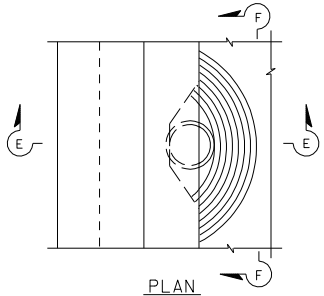

PLAN

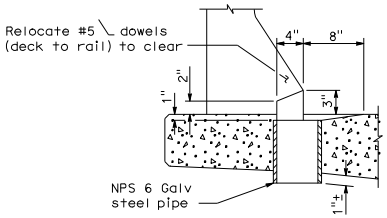

SECTION E-E

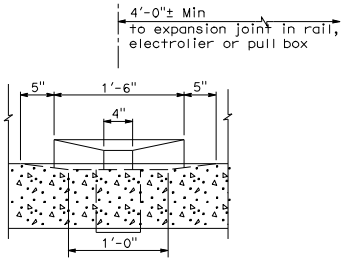

SECTION F-F

DRAIN - TYPE "B" DETAIL 7-3

For Type 25 barrier railing

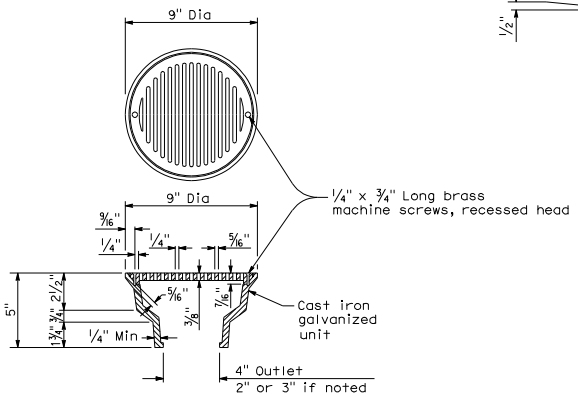

AREA DRAIN DETAIL 7-4

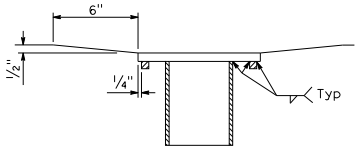

SECTION G-G

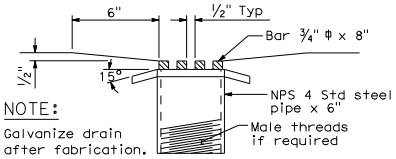

NOTE:
Galvanize drain after fabrication.

SECTION H-H

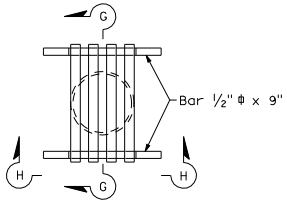

PLAN

PEDESTRIAN STRUCTURE DRAIN DETAIL 7-5

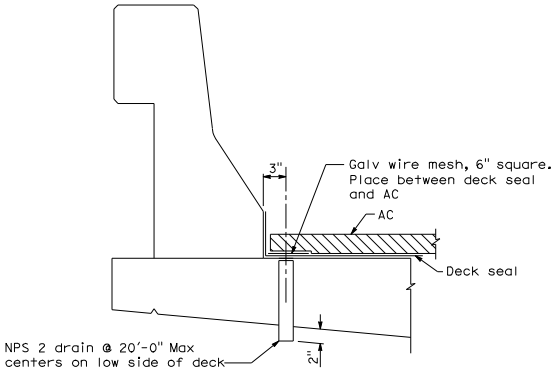

DECK BLEEDER DRAIN DETAIL 7-6

STATE OF CALIFORNIA
DEPARTMENT OF TRANSPORTATION

DECK DRAINS

NO SCALE

B7-5

10-17-05

2006 STANDARD PLAN B7-5