DIST	COUNTY	ROUTE	POST MILES TOTAL PROJECT	SHEET NO.	TOTAL SHEETS

REGISTERED CIVIL ENGINEER

May 1, 2006
PLANS APPROVAL DATE

REGISTERED PROFESSIONAL ENGINEER Overcomer Y. Hor No. C45803 Exp. 12-31-06 CIVIL STATE OF CALIFORNIA

The State of California or its officers or agents shall not be responsible for the accuracy or completeness of electronic copies of this plan sheet.

To get to the Caltrans web site, go to: http://www.dot.ca.gov

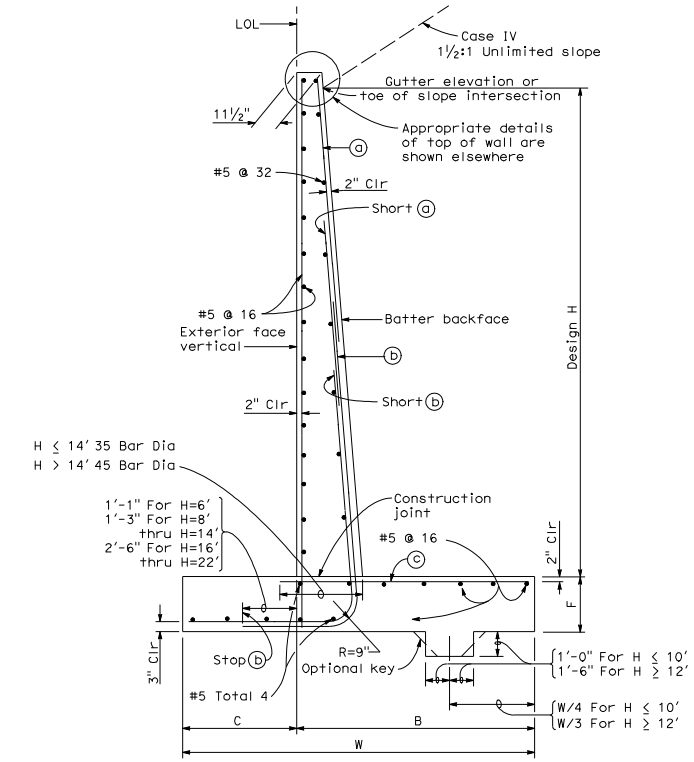

SPREAD FOOTING SECTION

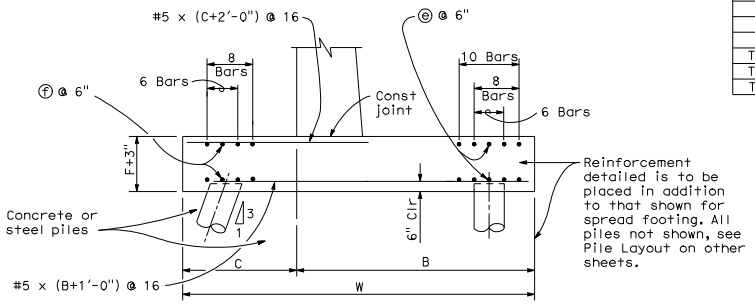

90 KIP PILE FOOTING SECTION

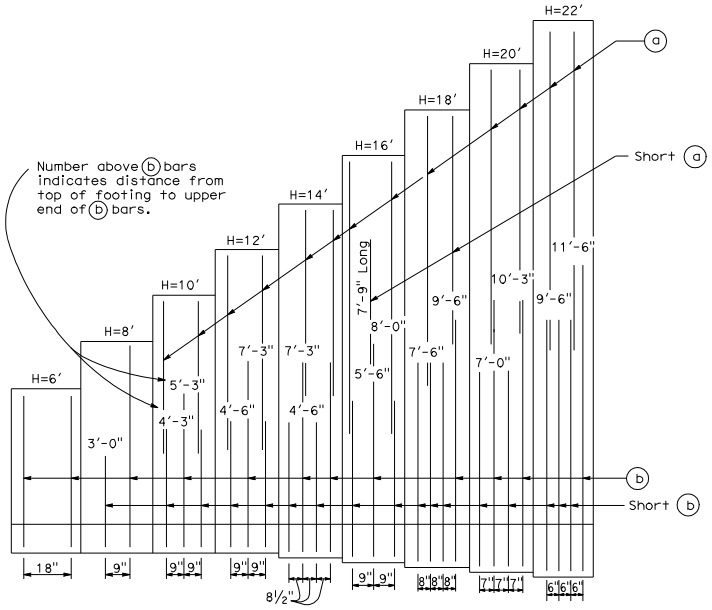

ELEVATION

TABLE OF REINFORCING STEEL, DIMENSIONS AND DATA

Design H	6'	8'	10'	12'	14'	16'	18'	20'	22'
W	3'-10"	5'-3"	6'-7"	8'-3"	9'-10"	11'-4"	13'-0"	14'-10"	17'-6"
C	1'-4"	1'-7"	1'-10"	2'-2"	2'-6"	2'-10"	3'-1"	3'-8"	4'-4"
B	2'-6"	3'-8"	4'-9"	6'-1"	7'-4"	8'-6"	9'-11"	11'-2"	13'-2"
F	1'-2"	1'-2"	1'-2"	1'-2"	1'-4"	1'-7"	1'-10"	2'-1"	2'-4"
Batter	½:12	½:12	½:12	½:12	½:12	½:12	⅝:12	¾:12	⅞:12
ⓐ bars			#5 @ 18	#5 @ 18	#6 @ 17	#6 @ 9	#8 @ 16	#8 @ 14	#8 @ 12
ⓑ bars	#5 @ 18	#5 @ 9	#6 @ 9	#8 @ 9	#9 @ 8½	#11 @ 9	#11 @ 8	#11 @ 7	#11 @ 6
ⓒ bars	#5 @ 18	#5 @ 18	#6 @ 18	#6 @ 9	#6 @ 8½	#8 @ 9	#8 @ 8	#8 @ 7	#8 @ 6
Total ⓔ bars	6-#6	6-#6	8-#8	8-#8	8-#8	8-#8	10-#6	10-#6	10-#6
Total ⓕ bars			8-#6	8-#6	8-#6	8-#6	6-#6	6-#6	6-#6
Toe Press ksf	2.6	3.2	3.9	4.5	5.0	5.7	6.6	7.0	7.0

NOTES:

1. For design notes, drainage notes and other details, See B3-8.
2. For wall stem joint details, see B0-3/3-3 and B0-3/3-4.
3. At ⓑ and Short ⓑ bars:
   H ≤ 6', no splices are allowed within 1'-8" above the top of footing.
   H > 6', no splices are allowed within H/4 above the top of footing.

STATE OF CALIFORNIA
DEPARTMENT OF TRANSPORTATION

RETAINING WALL TYPE 2

NO SCALE

B3-4

2006 STANDARD PLAN B3-4

8-1-05