DIST	COUNTY	ROUTE	POST MILES TOTAL PROJECT	SHEET NO.	TOTAL SHEETS

REGISTERED CIVIL ENGINEER

May 1, 2006
PLANS APPROVAL DATE

REGISTERED PROFESSIONAL ENGINEER Overcomer Y. Hor No. C45803 Exp. 12-31-06 CIVIL STATE OF CALIFORNIA

The State of California or its officers or agents shall not be responsible for the accuracy or completeness of electronic copies of this plan sheet.

To get to the Caltrans web site, go to: http://www.dot.ca.gov

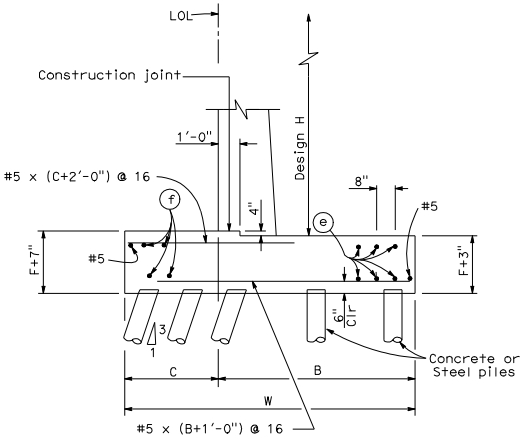

90 KIP PILE FOOTING SECTION

Reinforcement detailed is to be placed in addition to that shown for spread footing. See Pile Layout on other sheets.

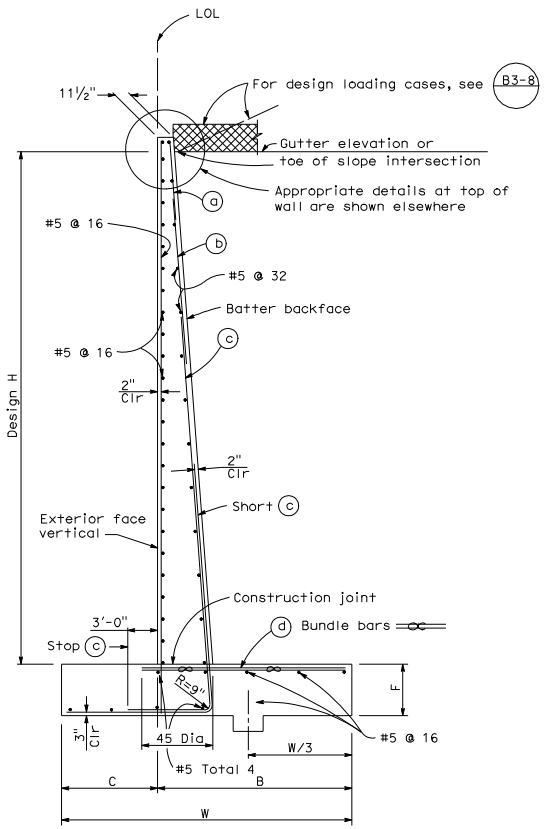

SPREAD FOOTING SECTION

NOTES:

1. For details not shown and drainage notes see B3-8
2. For wall stem joint details, see B0-3 3-3 and B0-3 3-4
3. At c and Short c bars:
   H ≤ 6', no splices are allowed within 1'-8" above the top of footing.
   H > 6', no splices are allowed within H/4 above the top of footing.

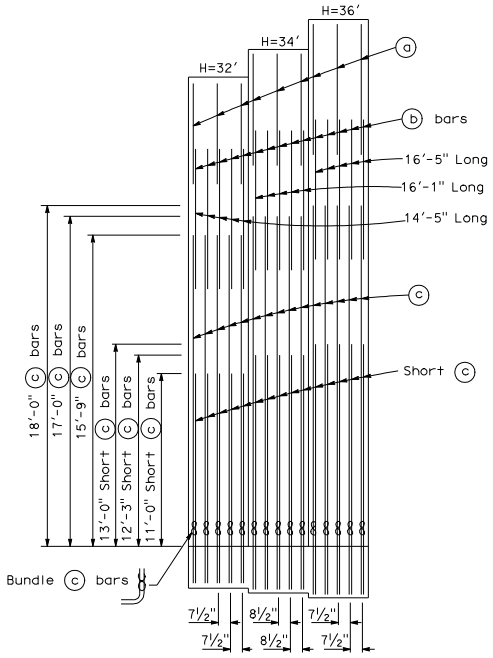

ELEVATION

TABLE OF REINFORCING STEEL, DIMENSIONS AND DATA				
Design H		32'	34'	36'
W		18'-3"	19'-3"	20'-3"
C		5'-10"	6'-3"	6'-7"
B		12'-5"	13'-0"	13'-10"
F Spread Footing		3'-3"	3'-7"	3'-11"
Batter		1:12	1:12	1:12
a bars		#6 @ 16	#6 @ 16	#6 @ 14
b bars		#9 @ 8	#9 @ 8	#9 @ 7
c bars		#11 @ 8 ∞	#11 @ 8 ∞	#11 @ 7 ∞
d bars		#9 @ 8 ∞	#9 @ 8 ∞	#9 @ 7 ∞
Total e bars		6-#6	6-#6	6-#6
Total f bars		4-#5	4-#5	4-#5
Loading Case I	H Comp kip	24.7	28.1	31.5
	V Comp kip	59.6	67.4	74.2
	Toe Pressure ksf	6.3	6.8	7.3
Loading Case II	H Comp kip	37.1	41.6	47.2
	V Comp kip	82.1	92.2	102.3
	Toe Pressure ksf	7.7	8.4	9.1
Loading Case III	H Comp kip	29.2	32.6	36.0
	V Comp kip	66.3	74.2	83.2
	Toe Pressure ksf	7.9	8.4	8.9

∞ Denotes a bundle of 2 bars.

STATE OF CALIFORNIA
DEPARTMENT OF TRANSPORTATION

RETAINING WALL TYPE 1 H=32' THROUGH 36'

NO SCALE

B3-2

2006 STANDARD PLAN B3-2

8-1-05