| DIST | COUNTY | ROUTE | POST MILES TOTAL PROJECT | SHEET NO. | TOTAL SHEETS |
|---|---|---|---|---|---|
| | | | | | |

Randell D. Hiatt
REGISTERED CIVIL ENGINEER

May 1, 2006
PLANS APPROVAL DATE

REGISTERED PROFESSIONAL ENGINEER
Randell D. Hiatt
No. C50200
Exp. 6-30-07
CIVIL
STATE OF CALIFORNIA

*The State of California or its officers or agents shall not be responsible for the accuracy or completeness of electronic copies of this plan sheet.*

*To get to the Caltrans web site, go to: http://www.dot.ca.gov*

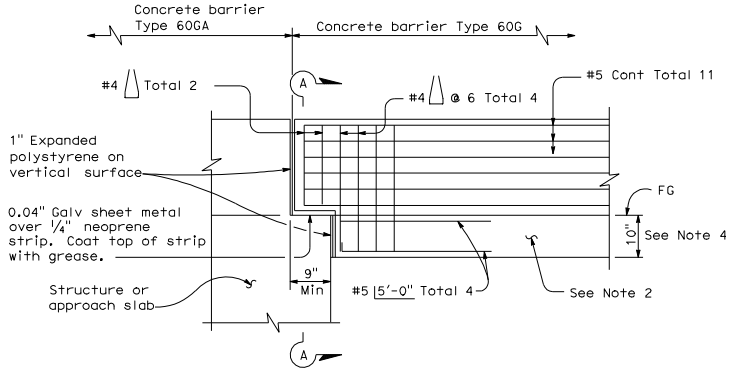


CONCRETE BARRIER TYPE 60G CONNECTION TO STRUCTURE

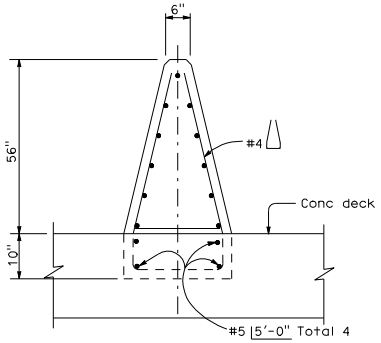


SECTION A-A

NOTES:

1. See Standard Plan A76D for Concrete Barrier Type 60G and Type 60GA.
2. Footing monolithic or doweled with 2-#8 x 8" @ 2'-0". The footing is required at concrete barrier ends and at interruptions in concrete barrier.
3. Expansion joints in concrete barrier shall be located at all deck, pavement and principal wall joints. Expansion joint filler material shall be the same size as joint or 1/2" minimum.
4. 10" Concrete barrier footing extends 10' back from structure.
5. See Standard Plan A78I for transition to Thrie Beam Barrier.

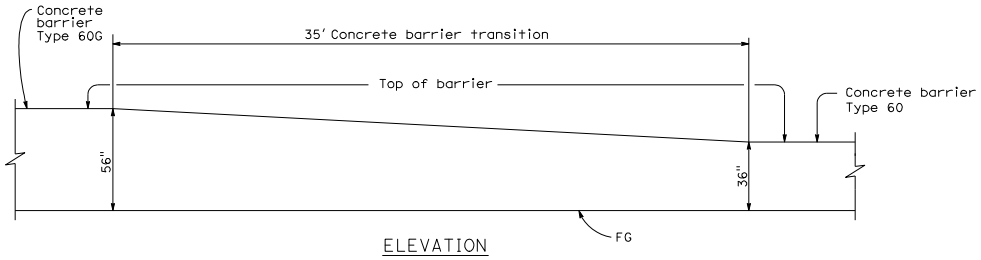


ELEVATION

TRANSITION CONCRETE BARRIER TYPE 60G TO CONCRETE BARRIER TYPE 60

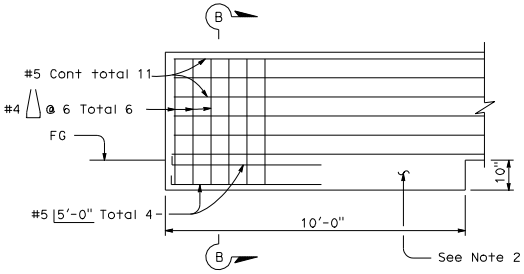


CONCRETE BARRIER TYPE 60G END ANCHORAGE

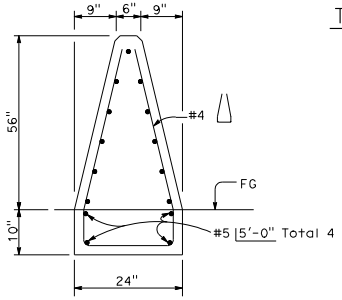


SECTION B-B

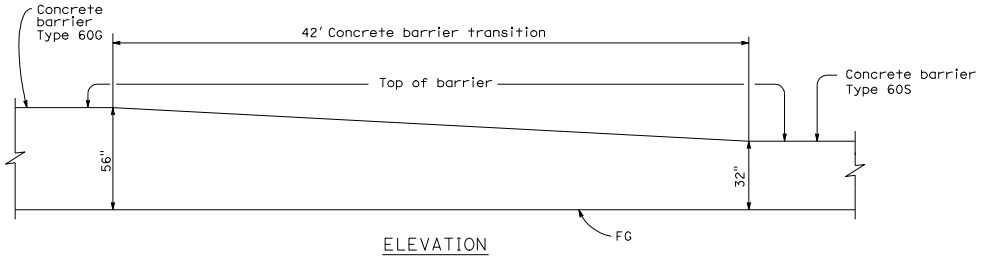


ELEVATION

TRANSITION CONCRETE BARRIER TYPE 60G TO CONCRETE BARRIER TYPE 60S

STATE OF CALIFORNIA
DEPARTMENT OF TRANSPORTATION

# CONCRETE BARRIER TYPE 60G

NO SCALE

A76E

2006 STANDARD PLAN A76E

7-17-05