DIST	COUNTY	ROUTE	POST MILES TOTAL PROJECT	SHEET NO.	TOTAL SHEETS

REGISTERED CIVIL ENGINEER

May 1, 2006
PLANS APPROVAL DATE

REGISTERED PROFESSIONAL ENGINEER
Greg W. Edwards
No. C36386
Exp. 6-30-06
CIVIL
STATE OF CALIFORNIA

The State of California or its officers or agents shall not be responsible for the accuracy or completeness of electronic copies of this plan sheet.

To get to the Caltrans web site, go to: http://www.dot.ca.gov

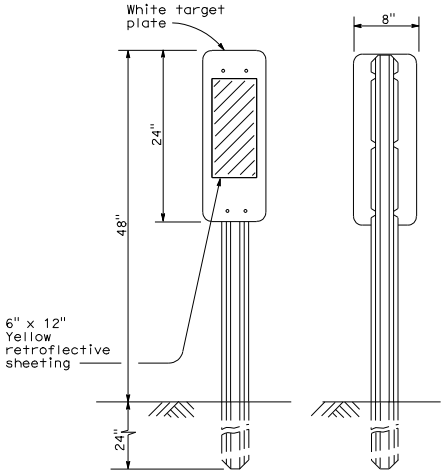

FRONT BACK

TYPE L-1 (CA)

See Note 1

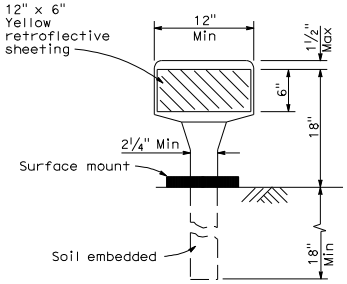

TYPE K-1 (CA)

(Flexible post with horizonal orientation of sheeting)

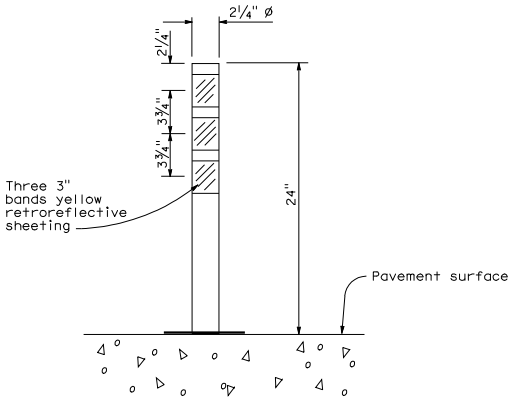

TYPE Q (CA)

(Tubular flexible post surface mount)

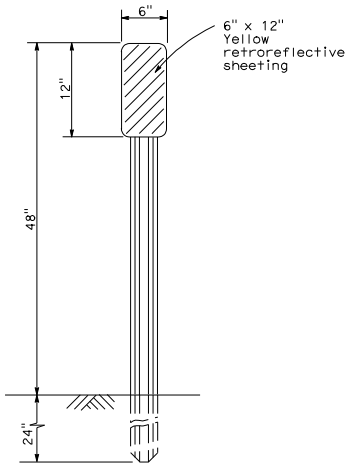

TYPE L-2 (CA)

See Note 1

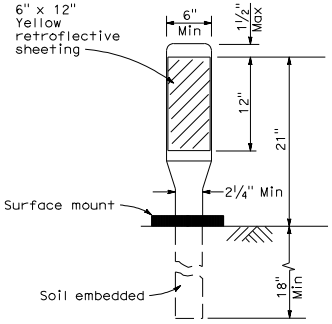

TYPE K-2 (CA)

(Flexible post with vertical orientation of sheeting)

NOTE:

1. See Standard Plan A73B for metal post details and additional markers.

STATE OF CALIFORNIA
DEPARTMENT OF TRANSPORTATION

OBJECT MARKERS

NO SCALE

A73A

9-27-05

2006 STANDARD PLAN A73A