DIST	COUNTY	ROUTE	KILOMETER POST TOTAL PROJECT	SHEET NO.	TOTAL SHEETS

REGISTERED CIVIL ENGINEER

December 30, 2004
PLANS APPROVAL DATE

REGISTERED PROFESSIONAL ENGINEER — Tillat Sattar — No. C42892 — Exp. 3-31-06 — CIVIL — STATE OF CALIFORNIA

The State of California or its officers or agents shall not be responsible for the accuracy or completeness of electronic copies of this plan sheet.

To get to the Caltrans web site, go to: http://www.dot.ca.gov

To accompany plans dated _____

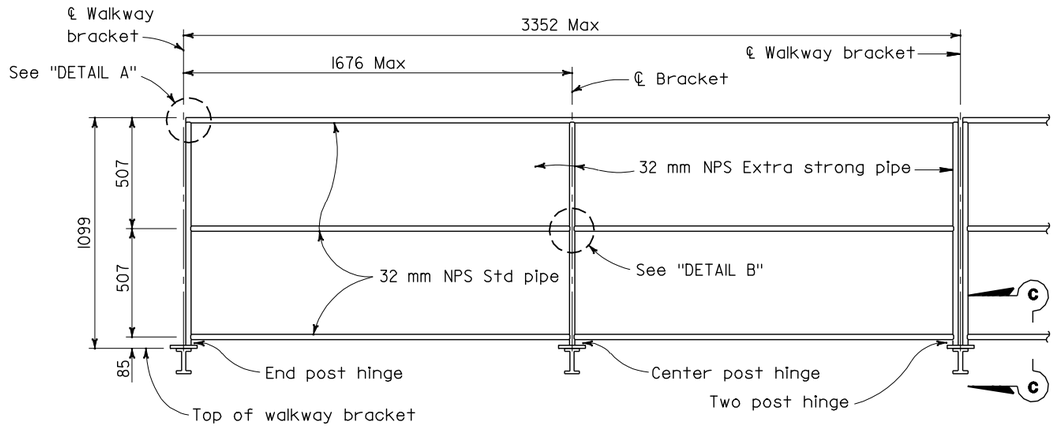

SAFETY RAILING ELEVATION

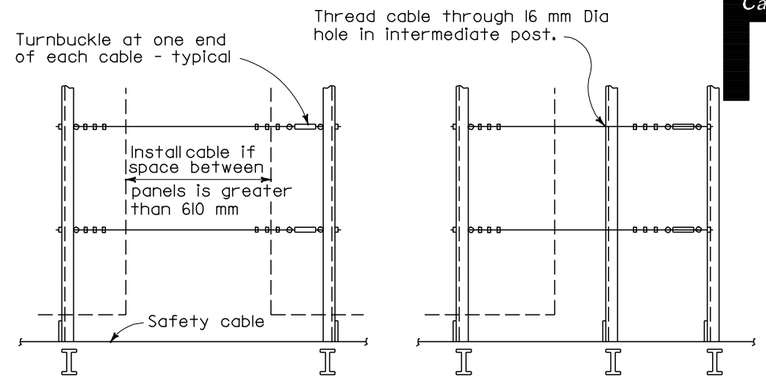

BETWEEN PANELS — BEYOND PANELS

UPPER SAFETY CABLE ELEVATION

For tubular structures

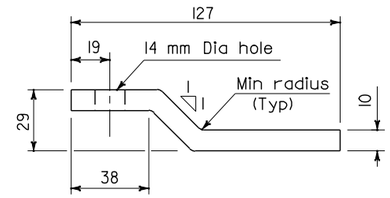

PLAN - KICKER BAR

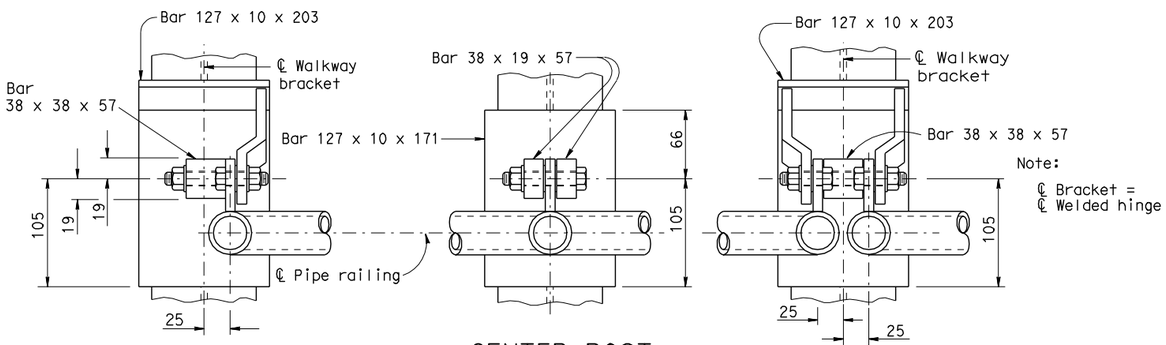

END POST — CENTER POST WELDED HINGE - PLAN — TWO POST

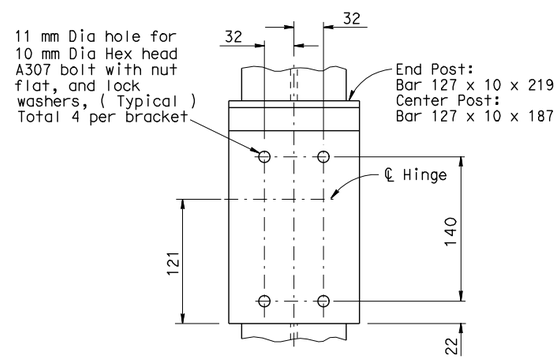

TYPICAL BOLTED (ALTERNATIVE) HINGED CONNECTION

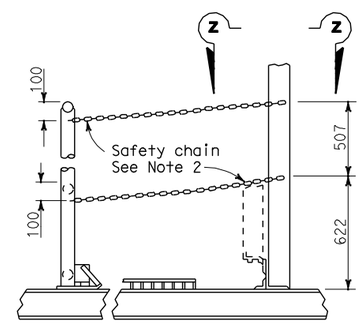

CHAIN ASSEMBLY

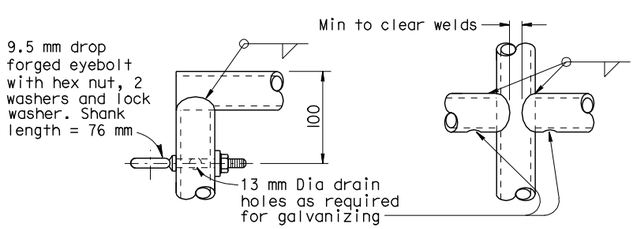

DETAIL A — DETAIL B

Note: Alternative venting methods may be used if approved by the Engineer.

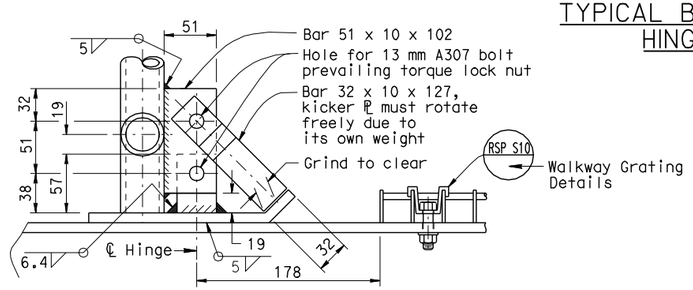

DETAIL C

NOTES

1. Special care shall be taken to insure that the complete hinge and latch assembly will hold the safety railing in a steady manner, free of wobble while in the raised position. Maximum allowable displacement from vertical at top of railing when latched shall be 12 mm.
2. Safety chain shall be 9.5 mm galvanized steel coil chain, approximately 39.4 links per meter. Length shall be minimum which allows lock-up of safety railing. Minimum of two safety chains per safety railing. Material shall be Grade 43 high test chain ASTM A413.
3. Cable clips shall be installed according to manufacturer's recommendations.

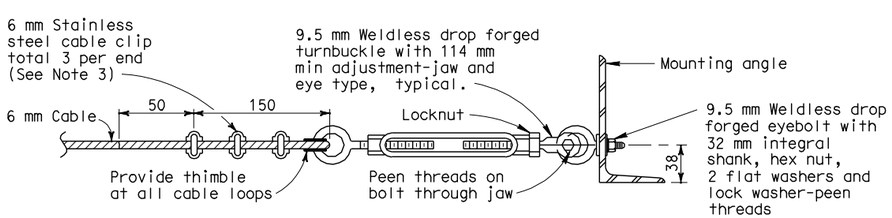

TURNBUCKLE DETAILS

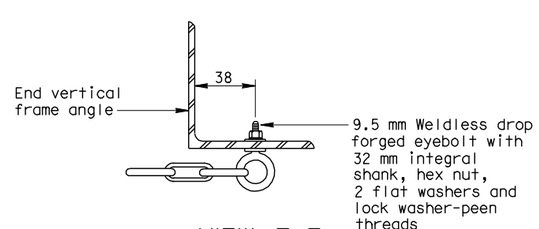

VIEW Z-Z

STATE OF CALIFORNIA
DEPARTMENT OF TRANSPORTATION

OVERHEAD SIGNS WALKWAY SAFETY RAILING DETAILS

NO SCALE

ALL DIMENSIONS ARE IN MILLIMETERS UNLESS OTHERWISE SHOWN

RSP S11 DATED DECEMBER 30, 2004 SUPERSEDES
RSP S11 DATED OCTOBER 26, 2000 AND STANDARD PLAN S11
DATED JULY 1, 1999-PAGE 231 OF THE STANDARD PLANS BOOK DATED JULY 1999.

REVISED STANDARD PLAN RSP S11

1999 REVISED Std PLAN RSP S11

1-03-05