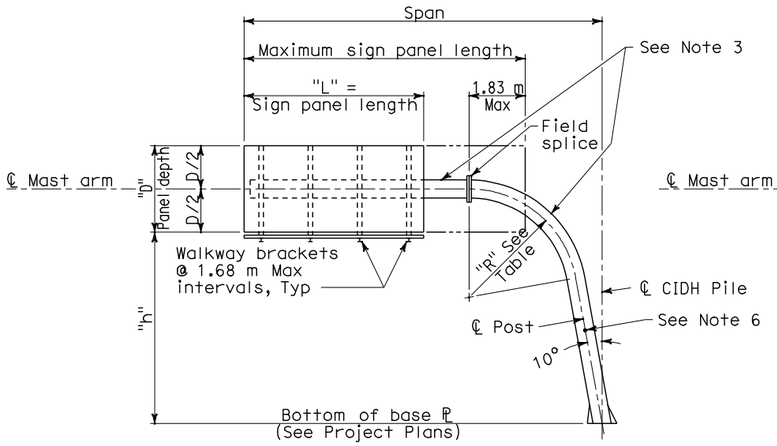

SLANTED POST CANTILEVER

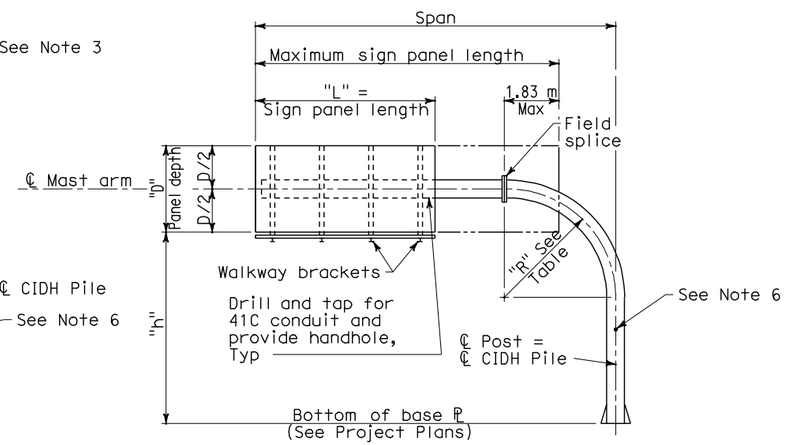

VERTICAL POST CANTILEVER

"D" (mm) Panel Depth	"D" (m) Panel Depth	"H" (m) Post Height	POST TYPE # FOR SPANS OF CANTILEVER																		
			11.59 m span Col #	11.28 m span Col #	10.98 m span Col #	10.67 m span Col #	10.37 m span Col #	10.06 m span Col #	9.76 m span Col #	9.45 m span Col #	9.15 m span Col #	8.84 m span Col #	8.54 m span Col #	8.23 m span Col #	7.93 m span Col #	7.62 m span Col #	7.32 m span Col #	7.01 m span Col #	6.71 m span Col #	6.40 m span Col #	6.10 m span Col #
3048	3.05	8.84	-	-	-	-	-	-	-	5	4	4	4	4	4	3	3	3	3	2	2
3048	3.05	8.23	-	-	-	-	-	-	-	4	4	4	4	4	3	3	3	3	2	2	2
3048	3.05	7.62	-	-	-	-	-	-	-	4	4	4	4	3	3	3	3	2	2	2	2
3048	3.05	7.01	-	-	-	-	-	-	-	4	4	4	3	3	3	3	2	2	2	2	2
3048	3.05	6.40	-	-	-	-	-	-	-	4	3	3	3	3	3	2	2	2	2	2	2
2794	2.79	8.84	-	-	-	-	-	-	4	4	4	4	4	4	3	3	3	3	2	2	2
2794	2.79	8.23	-	-	-	-	-	-	4	4	4	4	4	3	3	3	3	2	2	2	2
2794	2.79	7.62	-	-	-	-	-	-	4	4	4	4	3	3	3	3	2	2	2	2	2
2794	2.79	7.01	-	-	-	-	-	-	4	4	3	3	3	3	3	2	2	2	2	2	2
2794	2.79	6.40	-	-	-	-	-	-	4	3	3	3	3	2	2	2	2	2	2	2	1
2540	2.54	8.84	-	-	-	-	5	4	4	4	4	4	3	3	3	3	2	2	2	2	2
2540	2.54	8.23	-	-	-	-	4	4	4	4	4	3	3	3	3	3	2	2	2	2	2
2540	2.54	7.62	-	-	-	-	4	4	4	4	3	3	3	3	3	2	2	2	2	2	2
2540	2.54	7.01	-	-	-	-	4	4	4	3	3	3	3	2	2	2	2	2	2	2	1
2540	2.54	6.40	-	-	-	-	4	4	3	3	3	3	2	2	2	2	2	2	2	1	1
2286	2.29	8.84	-	-	5	5	4	4	4	4	4	3	3	3	3	2	2	2	2	2	2
2286	2.29	8.23	-	-	4	4	4	4	4	4	3	3	3	3	2	2	2	2	2	2	2
2286	2.29	7.62	-	-	4	4	4	4	4	3	3	3	3	2	2	2	2	2	2	2	1
2286	2.29	7.01	-	-	4	4	4	4	3	3	3	3	2	2	2	2	2	2	2	1	1
2286	2.29	6.40	-	-	4	4	4	3	3	3	3	2	2	2	2	2	2	2	1	1	1
2032	2.03	8.84	-	4	4	4	4	4	4	3	3	3	3	3	2	2	2	2	2	2	1
2032	2.03	8.23	-	4	4	4	4	4	3	3	3	3	3	2	2	2	2	2	2	1	1
2032	2.03	7.62	-	4	4	4	4	3	3	3	3	3	2	2	2	2	2	2	1	1	1
2032	2.03	7.01	-	4	4	4	3	3	3	3	3	2	2	2	2	2	2	2	1	1	1
2032	2.03	6.40	-	4	4	4	3	3	3	3	2	2	2	2	2	2	2	1	1	1	1
1778	1.78	8.84	4	4	4	4	4	3	3	3	3	3	2	2	2	2	2	2	2	1	1
1778	1.78	8.23	4	4	4	4	4	3	3	3	3	2	2	2	2	2	2	2	1	1	1
1778	1.78	7.62	4	4	4	4	3	3	3	3	3	2	2	2	2	2	2	1	1	1	1
1778	1.78	7.01	4	4	4	3	3	3	3	2	2	2	2	2	2	2	1	1	1	1	1
1778	1.78	6.40	4	4	3	3	3	3	2	2	2	2	2	2	2	1	1	1	1	1	1
1524	1.52	8.84	4	4	4	4	3	3	3	3	2	2	2	2	2	2	2	1	1	1	1
1524	1.52	8.23	4	4	4	4	3	3	3	2	2	2	2	2	2	2	1	1	1	1	1
1524	1.52	7.62	4	4	3	3	3	3	2	2	2	2	2	2	2	1	1	1	1	1	1
1524	1.52	7.01	4	3	3	3	3	3	2	2	2	2	2	2	2	1	1	1	1	1	1
1524	1.52	6.40	3	3	3	3	3	2	2	2	2	2	2	2	1	1	1	1	1	1	1
1270	1.27	8.84	4	3	3	3	3	3	2	2	2	2	2	2	2	1	1	1	1	1	1
1270	1.27	8.23	4	3	3	3	3	2	2	2	2	2	2	2	1	1	1	1	1	1	1
1270	1.27	7.62	3	3	3	3	3	2	2	2	2	2	2	2	1	1	1	1	1	1	1
1270	1.27	7.01	3	3	3	2	2	2	2	2	2	2	2	1	1	1	1	1	1	1	1
1270	1.27	6.40	3	3	2	2	2	2	2	2	2	2	1	1	1	1	1	1	1	1	1

Caltrans Metric

DIST	COUNTY	ROUTE	KILOMETER POST TOTAL PROJECT	SHEET NO.	TOTAL SHEETS

REGISTERED CIVIL ENGINEER

December 30, 2004
PLANS APPROVAL DATE

REGISTERED PROFESSIONAL ENGINEER
Tillat Sattar
No. C42892
Exp. 03-31-06
CIVIL
STATE OF CALIFORNIA

The State of California or its officers or agents shall not be responsible for the accuracy or completeness of electronic copies of this plan sheet.

To get to the Caltrans web site, go to: http://www.dot.ca.gov

To accompany plans dated _____

NOTES

1. The maximum sign panel overlap onto the post elbow shall not exceed 1.83 m from the field splice.
2. When several sign panels are to be installed with a space between the panels, the space shall be as small as possible and 610 mm maximum.
3. All posts between base plate and field splice shall be as scheduled in table. All mast arms are standard pipe.
4. During sign erection the post shall be raked as necessary with the use of leveling nuts to level the sign panel.
5. At final position of post all top and bottom anchor bolt nuts shall be snug tighten against base plate.
6. Drill and tap for 41C chase nipple and plug with recessed pipe plugs. Place perpendicular to sign panel axis and away from approaching traffic. See Standard Plan ES-15C.
7. NPS - Nominal Pipe Size.
8. Post type # in Roman or Numerical implies the same specification of pipe post.

Post type #	Specification of pipe post	"R" radius (mm)	kg/m
I	pipe NPS 20 x 12.7 tk	3658	154.9
II	pipe NPS 24 x 12.7 tk	3658	186.8
III	pipe NPS 24 x 15.9 tk	3658	232.2
IV	pipe NPS 30 x 12.7 tk	3658	234.5
V	pipe NPS 30 x 15.9 tk	3658	291.7
VI	pipe NPS 30 x 19.05 tk	3658	348.2

STATE OF CALIFORNIA
DEPARTMENT OF TRANSPORTATION

OVERHEAD SIGNS-TUBULAR SINGLE POST TYPE LAYOUT AND PIPE SELECTION

NO SCALE

ALL DIMENSIONS ARE IN MILLIMETERS UNLESS OTHERWISE SHOWN

NSP S31 DATED DECEMBER 30, 2004 SUPERSEDES STANDARD PLAN S40P DATED JULY 1, 1999-PAGE 257 OF THE STANDARD PLANS BOOK DATED JULY 1999.

NEW STANDARD PLAN NSP S31

1999 NEW Std PLAN NSP S31

241B

1-03-05