DIST	COUNTY	ROUTE	KILOMETER POST TOTAL PROJECT	SHEET NO.	TOTAL SHEETS

Caltrans Metric

REGISTERED CIVIL ENGINEER

December 30, 2004
PLANS APPROVAL DATE

REGISTERED PROFESSIONAL ENGINEER Tillat Sattar No. C42892 Exp. 3-31-06 CIVIL STATE OF CALIFORNIA

The State of California or its officers or agents shall not be responsible for the accuracy or completeness of electronic copies of this plan sheet.

To get to the Caltrans web site, go to: http://www.dot.ca.gov

To accompany plans dated _____

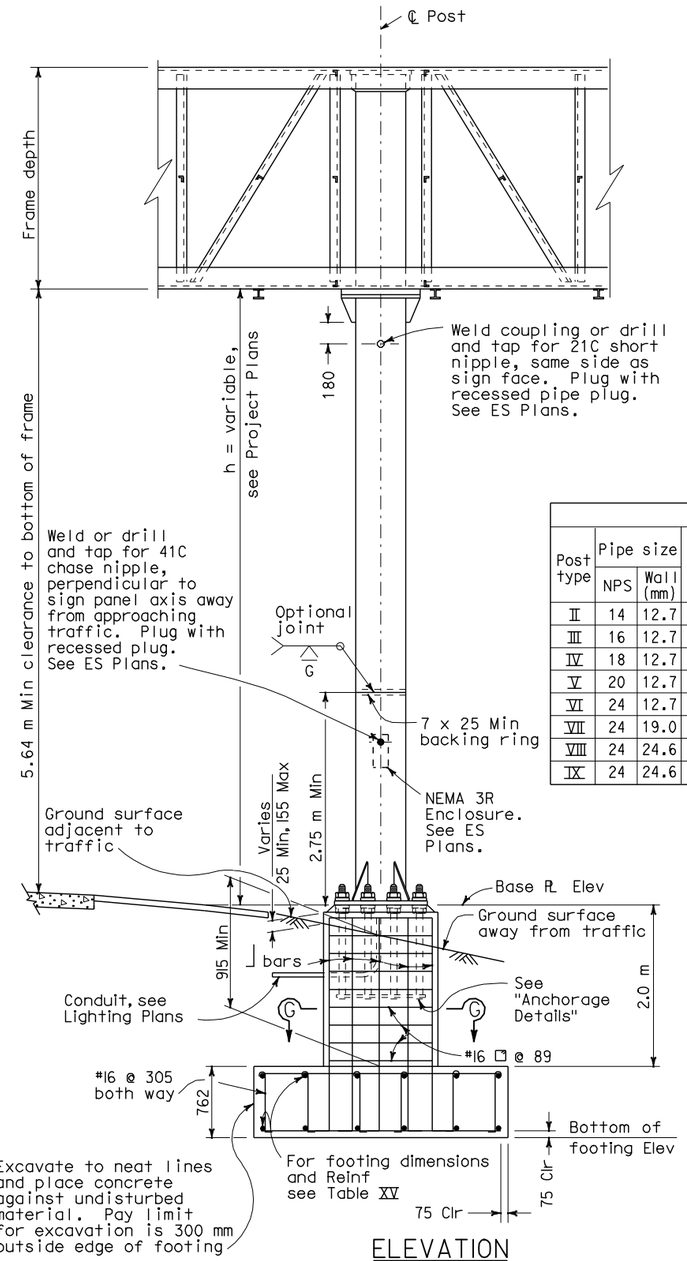

ELEVATION

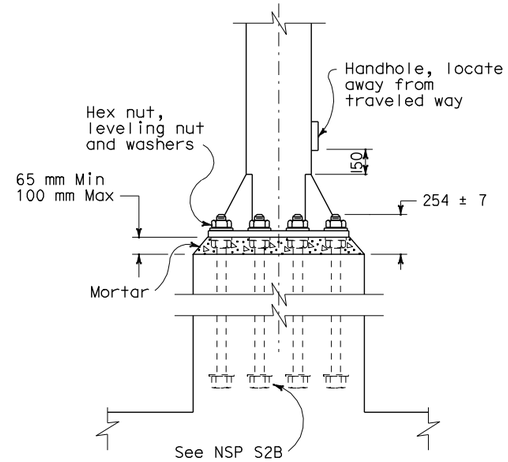

ANCHORAGE DETAILS

TABLE XV

Post type	Pipe size NPS	Pipe size Wall (mm)	Cap Plate for L 127x127 (mm)	Cap Plate for L 152x152 (mm)	Round Pedestal: Pedestal Size Dia (mm)	Round Pedestal: Vertical J-Bars Equally spaced total	Round Pedestal: Vertical J-Bars Bar Size	Round Pedestal: Vertical J-Bars Bar B.C. (mm)	Round Pedestal: Spiral Bar Size	Round Pedestal: Spiral Pitch (mm)	Square Pedestal: Pedestal Size Square (mm)	Square Pedestal: Vertical J-Bars Equally spaced total	Square Pedestal: Vertical J-Bars Bar Size	Square Pedestal: Vertical J-Bars Spacing ea face (mm)	Square Pedestal: Hoop Bar Size	Square Pedestal: Hoop Spacing (mm)	Pile footing Dia (mm)	Pile footing Depth (mm)	Alternate: Spread Footing See note 2 (mm)	Spread Footing Reinforcement: Width Top	Spread Footing Reinforcement: Width Bottom	Spread Footing Reinforcement: Longitudinal Top	Spread Footing Reinforcement: Longitudinal Bottom	Spread Footing Reinforcement: Footing Stirrups
II	14	12.7	610 x 610 x 25	660 x 660 x 25	1600	16	32	1372	16	89	1600	16	32	346	16	89	1372	4.5	3658 x 4267 x 762	14-#19	14-#22	13-#29	13-#29	#16 @ 305
III	16	12.7	660 x 660 x 25	711 x 711 x 25	1600	16	32	1372	16	89	1600	16	32	346	16	89	1372	4.9	3658 x 4267 x 762	15-#19	15-#22	13-#29	13-#29	#16 @ 305
IV	18	12.7	711 x 711 x 25	762 x 762 x 25	1600	16	32	1372	16	89	1600	16	32	346	16	89	1372	5.5	3658 x 4267 x 762	15-#19	15-#22	13-#29	13-#29	#16 @ 305
V	20	12.7	762 x 762 x 25	813 x 813 x 25	1600	16	32	1372	16	89	1600	16	32	346	16	89	1372	5.8	3962 x 4267 x 762	15-#19	15-#22	14-#29	14-#29	#16 @ 305
VI	24	12.7	864 x 864 x 25	914 x 914 x 25	1753	16	36	1534	16	89	1753	16	36	381	16	89	1524	6.7	3962 x 4877 x 762	17-#22	17-#22	14-#29	14-#36	#16 @ 305
VII	24	19.0	864 x 864 x 25	914 x 914 x 25	1753	16	36	1534	16	89	1753	16	36	381	16	89	1524	7.0	3962 x 5182 x 762	18-#22	18-#22	14-#29	14-#36	#16 @ 305
VIII	24	24.6	864 x 864 x 25	914 x 914 x 25	1753	16	36	1534	16	89	1753	16	36	381	16	89	1524	7.6	3962 x 5486 x 762	19-#22	19-#22	14-#29	14-#36	#16 @ 305
IX	24	24.6	864 x 864 x 25	914 x 914 x 25	1753	16	36	1534	16	89	1753	16	36	381	16	89	1524	7.6	3962 x 5486 x 762	19-#22	19-#22	14-#29	14-#36	#16 @ 305

Notes:

1. For "General Notes" see Revised Standard Plan RSP S1.
2. Longer side of footing shall be normal to axis of sign.
3. Backfill shall be in place prior to erection of post.
4. Thread upper 254 mm of anchor bolts and galvanize upper 305 mm.
5. Spread footing shown, use Pile Foundation when shown on the Project Plans.
6. Anchor plates may be retained with hexagon nut or formed head as alternatives to details shown.
7. On single post sign structures, the post shall be raked out of plumb, with the use of the leveling nuts to make the bottom of the sign frame level.
8. At final position of post all top and bottom nuts shall be tightened against base plate.
9. When foundation is located on a steep slope with exposed face of concrete adjacent to traffic, see "Detail C" on New Standard Plans NSP S13A and NSP S13B, as applicable.
10. Slope protection required when indicated on the Project Plans.

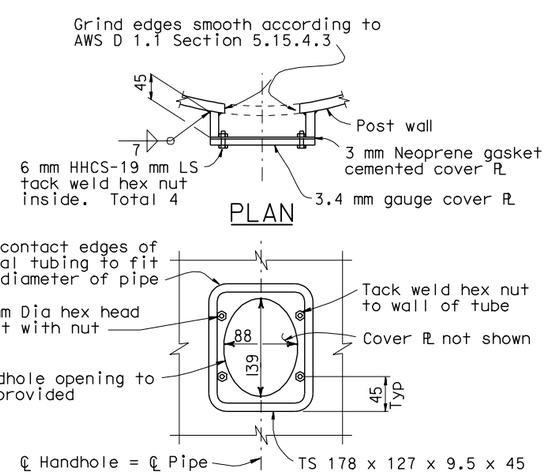

PLAN

ELEVATION

TYPICAL DETAILS OF HANDHOLE AND COVER

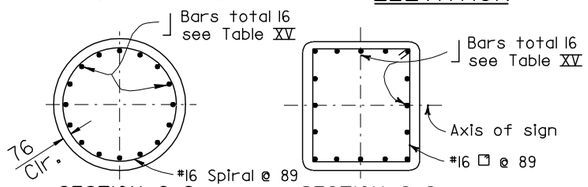

SECTION G-G
ROUND PEDESTAL

SECTION G-G
RECTANGLE PEDESTAL

STATE OF CALIFORNIA
DEPARTMENT OF TRANSPORTATION

OVERHEAD SIGNS-TRUSS SINGLE POST TYPE POST TYPES II THROUGH IX

NO SCALE

ALL DIMENSIONS ARE IN MILLIMETERS UNLESS OTHERWISE SHOWN

NSP S2A AND NSP S2B DATED DECEMBER 30, 2004
SUPERSEDES RSP S2 DATED OCTOBER 26, 2000 AND STANDARD PLAN S2
DATED JULY 1, 1999-PAGE 219 OF THE STANDARD PLANS BOOK DATED JULY 1999.

NEW STANDARD PLAN NSP S2A

1999 NEW Std PLAN NSP S2A

1-03-05