© 2012 California Department of Transportation
All Rights Reserved

Dist	COUNTY	ROUTE	POST MILES TOTAL PROJECT	SHEET No.	TOTAL SHEETS

REGISTERED CIVIL ENGINEER

October 19, 2012
PLANS APPROVAL DATE

REGISTERED PROFESSIONAL ENGINEER — Illiat Satter — No. C42892 — Exp. 3-31-14 — CIVIL — STATE OF CALIFORNIA

THE STATE OF CALIFORNIA OR ITS OFFICERS OR AGENTS SHALL NOT BE RESPONSIBLE FOR THE ACCURACY OR COMPLETENESS OF SCANNED COPIES OF THIS PLAN SHEET.

TO ACCOMPANY PLANS DATED _____

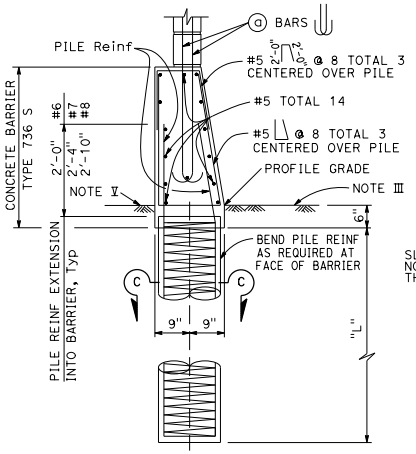

CASE 1

For details not shown, See Case 2.
Level ground ±10% on both sides of barrier.

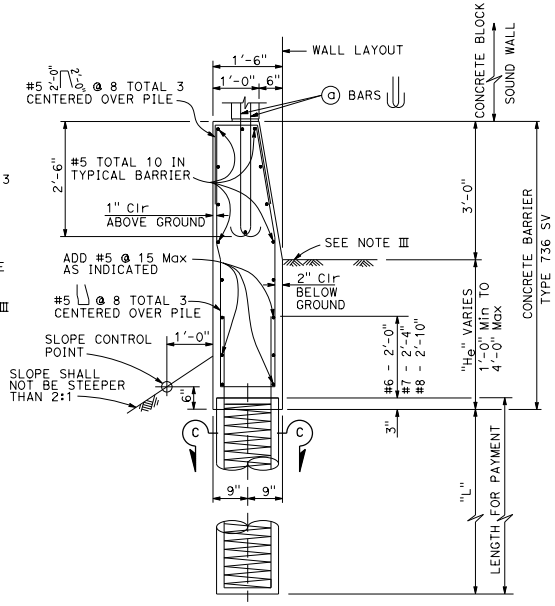

CASE 2

For details not shown, See Case 1.
Level ground ±10% at the traffic side of barrier and sloping ground on the opposite side.

BARRIER SECTIONS

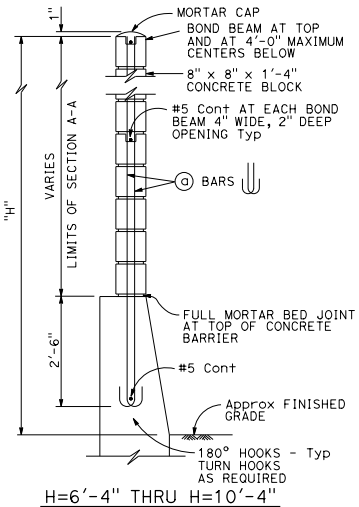

H=6'-4" THRU H=10'-4"

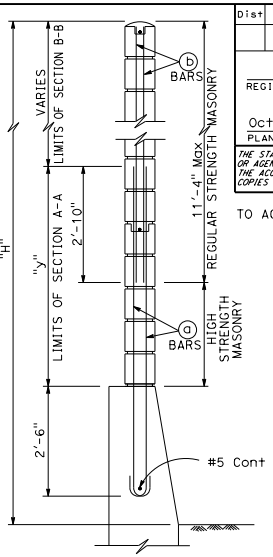

H=12'-4" THRU H=16'-4"

For details not shown, see H=6'-4" thru H=10'-4".

TYPICAL SECTIONS

See Standard Plan B15-8 for pile details.

SOUND WALL REINFORCEMENT TABLE

MAXIMUM H	(a) BARS @ 1'-4" Max	(b) BARS @ 1'-4" Max	"y"	f'm (psi)	COMPRESSIVE STRENGTH OF CMU (psi)	H
6'-4"	#4	---	---	1500	1900	6'-4"
8'-4"	#4	---	---	1500	1900	8'-4"
10'-4"	#4	---	---	1500	1900	10'-4"
12'-4"	#5	#4	5'-0"	1500	1900	12'-4"
14'-4"	#6	#4	7'-0"	1500	1900	14'-4"
16'-4"	#6	#4	9'-0"	2500	3750	16'-4"

NOTES I THROUGH VI:

I. Details shown are primarily to conform design of sound walls to Type 736S and Type 736 SV Concrete Barriers. For sound wall details conforming with barriers see Standard Plans B15-7 and B15-8.

II. For details and sections not shown, see Standard Plans B15-7 and B15-8.

III. Slope ground at traffic side of barrier to drain. Maximum slope ±10%. See Std Plan B11-56, Note 3.

IV. Pile spacing may be varied, but shall not exceed the tabular values. See Standard Plan B15-8.

V. For Case 1 - ground line to be at the same elevation on both sides of the barrier. Barrier shall not be used to retain earth.

VI. See Standard Plan B15-9 for other details.

NOTES A THROUGH F:

A. For type of block, type of block bond, and joint finish, see other sheets.

B. When blocks are laid in stacked bond, ladder type, galvanized joint reinforcement shall be provided. A minimum of 2-9 gauge wires continuous at 4'-0" maximum to be used. Locate reinforcement in joints that are at the approximate midpoint between bond beams.

C. Horizontal joints shall be tooled concave or may be weathered. Vertical joints shall be tooled concave or may be raked.

D. For intermediate wall heights (H), or barrier depths (H_e), that are between the values given, use the tabular information for the next higher (H) or (H_e).

E. Concrete to be used for the barrier shall contain not less than 590 pounds of cementitious material per cubic yard.

F. Masonry strengths are listed in the "SOUND WALL REINFORCEMENT TABLE".

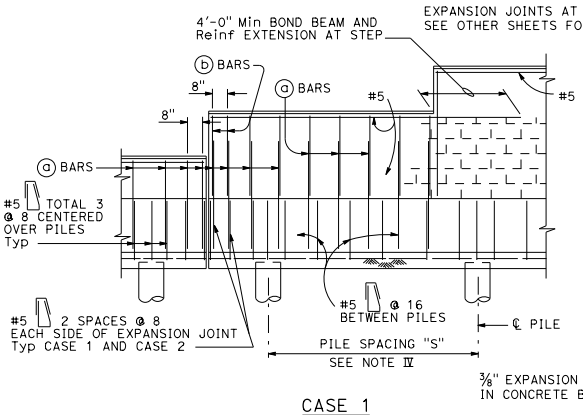

CASE 1

For details not shown, See Case 2.

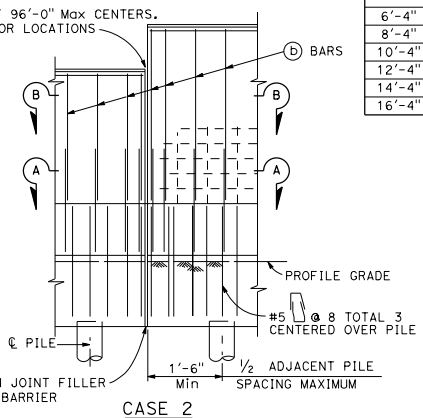

CASE 2

For details not shown, See Case 1.

PARTIAL ELEVATIONS

STATE OF CALIFORNIA
DEPARTMENT OF TRANSPORTATION

SOUND WALL MASONRY BLOCK ON TYPE 736S/SV BARRIER DETAILS (1)

NO SCALE

RSP B15-6 DATED OCTOBER 19, 2012 SUPERSEDES STANDARD PLAN B15-6
DATED MAY 20, 2011 - PAGE 320 OF THE STANDARD PLANS BOOK DATED 2010.

REVISED STANDARD PLAN RSP B15-6

2010 REVISED STANDARD PLAN RSP B15-6

7-19-12