© 2011 California Department of Transportation
All Rights Reserved

Dist	COUNTY	ROUTE	POST MILES TOTAL PROJECT	SHEET No.	TOTAL SHEETS

REGISTERED CIVIL ENGINEER

May 20, 2011
PLANS APPROVAL DATE

REGISTERED PROFESSIONAL ENGINEER
Stanley P. Johnson
No. C57793
Exp. 3-31-12
CIVIL
STATE OF CALIFORNIA

THE STATE OF CALIFORNIA OR ITS OFFICERS OR AGENTS SHALL NOT BE RESPONSIBLE FOR THE ACCURACY OR COMPLETENESS OF SCANNED COPIES OF THIS PLAN SHEET.

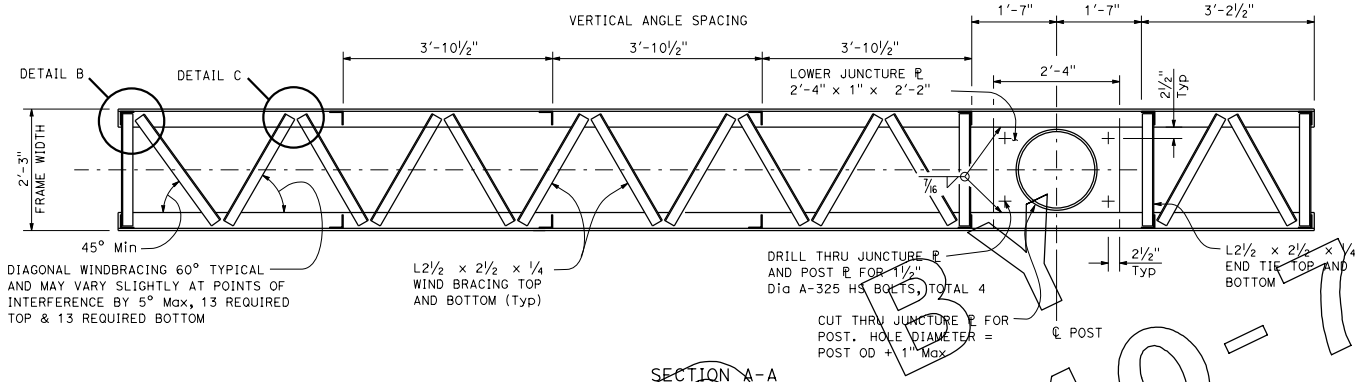

SECTION A-A

LOWER JUNCTURE CONNECTION

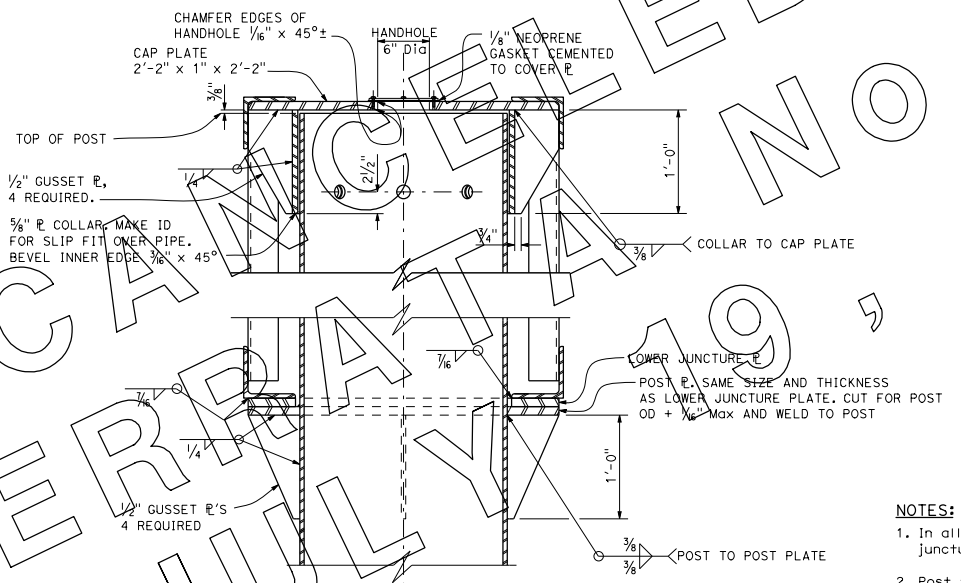

SECTION B-B

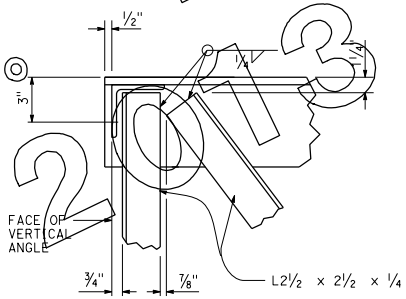

DETAIL B

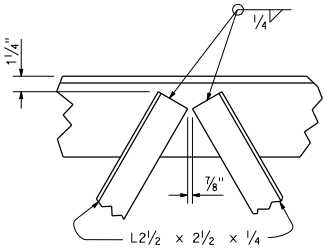

DETAIL C

NOTES:

1. In all cases, truss shall be supported at lower juncture connection.
2. Post to truss connections shall be fitted in shop.
3. For gussets parallel to the sign panel, cut to clear bolts as shown on Standard Plan S125.

STATE OF CALIFORNIA
DEPARTMENT OF TRANSPORTATION

OVERHEAD SIGN-TRUSS SINGLE POST TYPE FRAME JUNCTURE DETAILS UNBALANCED BUTTERFLY CHANGEABLE MESSAGE SIGNS MODEL 510

NO SCALE

S123

2010 STANDARD PLAN S123

10-1-09

CANCELLED BY ERRATA NO 2013-7 ON JULY 19,