DIST	COUNTY	ROUTE	KILOMETER POST TOTAL PROJECT	SHEET NO.	TOTAL SHEETS

REGISTERED CIVIL ENGINEER

January 24, 2005
PLANS APPROVAL DATE

REGISTERED PROFESSIONAL ENGINEER Tillat Sattar No. C42892 Exp. 03-31-2006 CIVIL STATE OF CALIFORNIA

The State of California or its officers or agents shall not be responsible for the accuracy or completeness of electronic copies of this plan sheet.

To get to the Caltrans web site, go to: http://www.dot.ca.gov

To accompany plans dated _____

Caltrans Metric

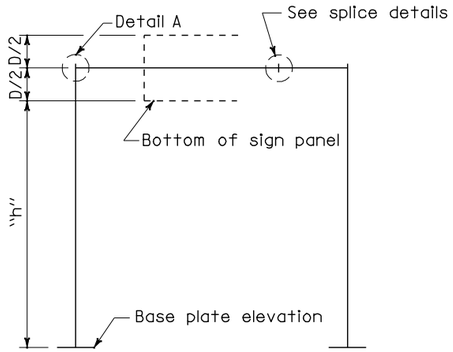

SINGLE CROSS BEAM SERIES
TYPE A-1

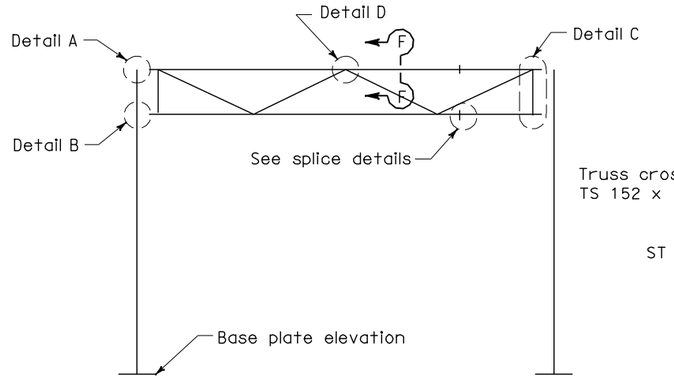

TRUSS CROSS BEAM SERIES
TYPE A-2

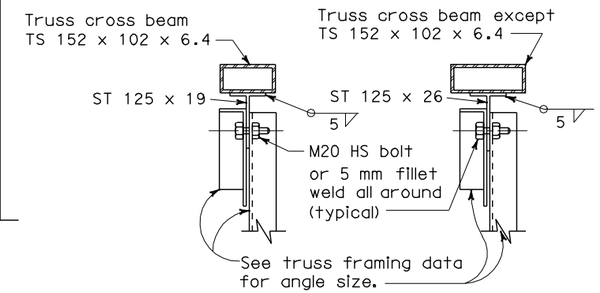

SECTION F-F

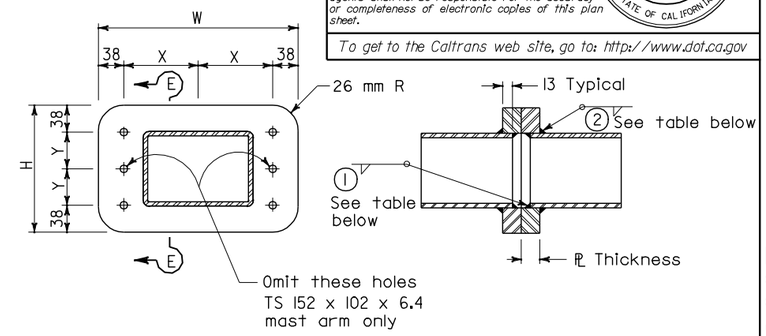

END VIEW

SECTION E-E

SPLICE DETAILS

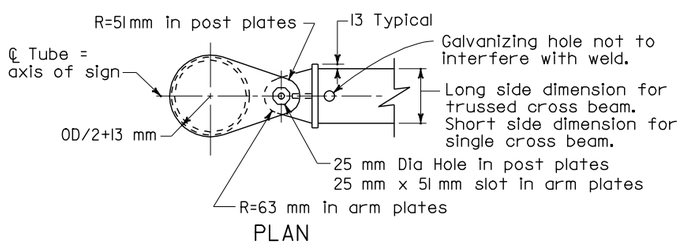

PLAN

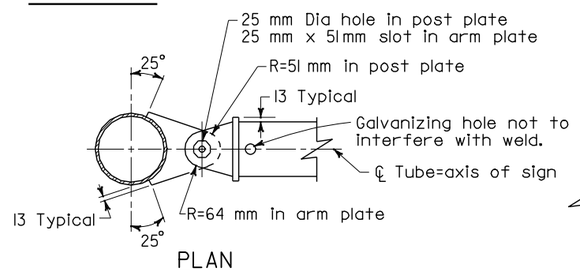

PLAN

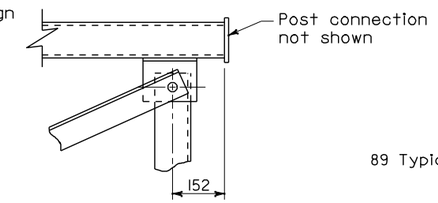

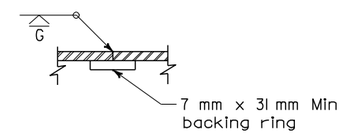

OPTIONAL
WELDED SPLICE

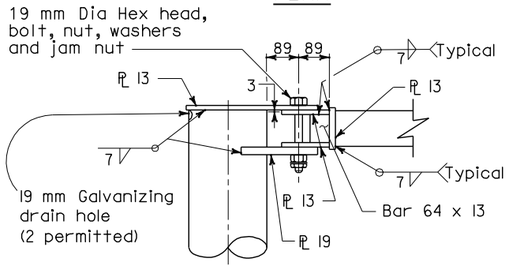

DETAIL A

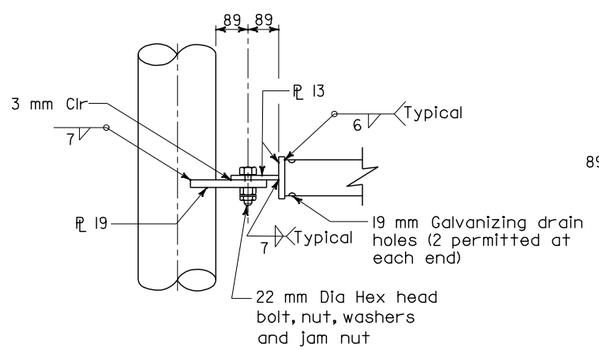

DETAIL B

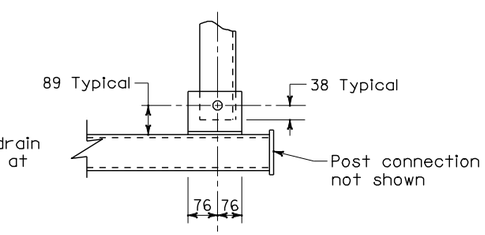

DETAIL C

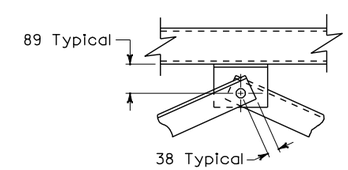

DETAIL D

NOTE

For post connection to base PL see RSP S48 A

For cross beam to sign panel connections see S46

See Format sheet for:

1. Sign type and location.
2. Panel type and location on structure.
3. Post size and dimension "h".
4. Cross beam size.
5. Foundation type.
6. Illumination if required.

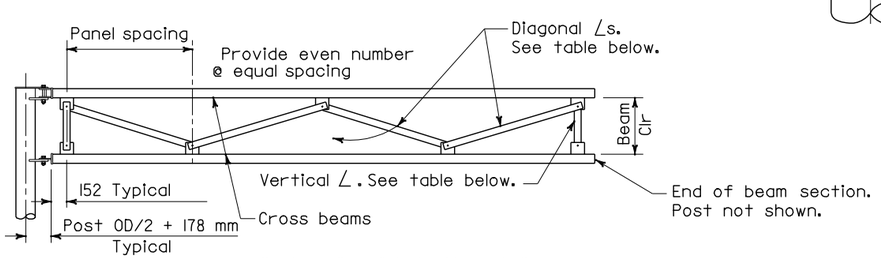

Camber for fabrication at ℄ span
Span < 9 m=0 mm
Span ≥ 9 m=13 mm

TRUSS FRAMING DATA

SIGN DEPTH (mm)	BEAM CLEARANCE (mm)	MAXIMUM PANEL SPACING (mm)	VERTICAL ANGLE (mm)	DIAGONAL ANGLE (mm)
1016-1778	610	1676	∠ 89x64x6.4 *	∠ 89x64x6.4 *
2032-2540	1372	1981	∠ 89x64x6.4 *	∠ 89x64x6.4 *

* Short leg outstanding.

SPLICE DATA

TUBULAR CROSS BEAM SIZE (mm)	HIGH STRENGTH BOLTS				A-36 PLATES (mm)			WELDING	
	No.	SIZE	X (mm)	Y (mm)	W (mm)	H (mm)	THICK-NESS	1	2
TS 152x102x6.4	4	M20	108	51	292	178	25.4	5	8
TS 203x102x6.4	6	M20	133	51	343	178	25.4	5	8
TS 203x152x6.4	6	M20	133	64	343	203	29	5	10
TS 203x152x9.5*	6	M20	108	89	292	254	29	7	8
TS 254x152x6.4	6	M20	165	64	406	203	35	5	10
TS 254x152x9.5	6	M20	165	76	406	229	41	8	13

* Long dimension vertical for single cross beam

STATE OF CALIFORNIA
DEPARTMENT OF TRANSPORTATION

OVERHEAD SIGNS-LIGHTWEIGHT TYPE A CONNECTION DETAILS

NO SCALE

ALL DIMENSIONS ARE IN
MILLIMETERS UNLESS OTHERWISE SHOWN

RSP S43 DATED JANUARY 24, 2005 SUPERSEDES STANDARD PLAN S43
DATED JULY 1, 2004-PAGE 342 OF THE STANDARD PLANS BOOK DATED JULY 2004.

REVISED STANDARD PLAN RSP S43

2004 REVISED Std PLAN RSP S43

1-24-05