DIST	COUNTY	ROUTE	KILOMETER POST TOTAL PROJECT	SHEET NO.	TOTAL SHEETS

REGISTERED CIVIL ENGINEER

January 24, 2005
PLANS APPROVAL DATE

REGISTERED PROFESSIONAL ENGINEER Tillat Sattar No. C42892 Exp. 03-31-2006 CIVIL STATE OF CALIFORNIA

The State of California or its officers or agents shall not be responsible for the accuracy or completeness of electronic copies of this plan sheet.

To get to the Caltrans web site, go to: http://www.dot.ca.gov

Caltrans Metric

To accompany plans dated _____

Notes:

1. Post not shown.
2. Photoelectric unit and 3-prong, EEI-NEMA standard, twist lock plug reception.

See RSP S2 Table for cap ℙ dimensions.

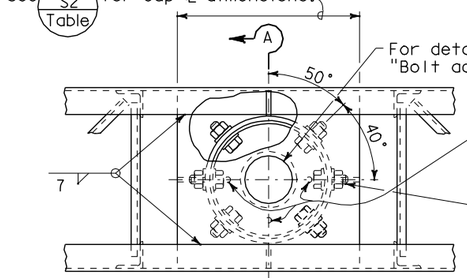

For details see "Bolt access hole"

High strength bolts total 6 (See table VIII for size). See note 3

Drill thru outer collar and post wall for bolts. Provide hardened contoured washers under bolt head and nut. Hardened contoured washers to be 76x76x7.9 Min. Grind face to fit.

PLAN

13 mm Gusset ℙ (4 required). Where gusset interferes with bolt, cut to clear

See RSP S2 Table for Cap ℙ size and thickness. Chamfer to fit chord fillets.

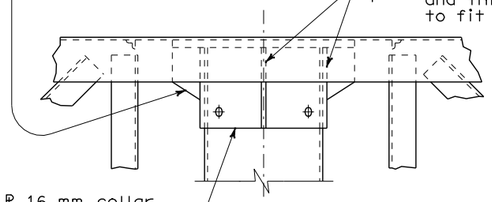

ℙ 16 mm collar. Make ID for slip fit over pipe

Bevel inner edge of collar 5 mm x 45°

ELEVATION

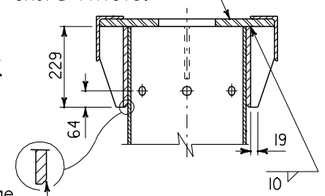

SECTION A-A

UPPER JUNCTURE CONNECTION

Single Post Type

Optional galvanizing drain holes: Drill and tap through cap plate for 16 mm Max Dia bolt. Hole shall be 7 mm clear of inside collar wall. Bolt length sized not to interfere with post. Install bolt after galvanizing.

ℙ length = Frame width less thickness of chord angles. Chamfer to fit chord fillets.

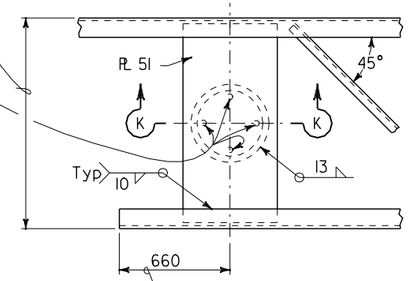

At post without cantilever

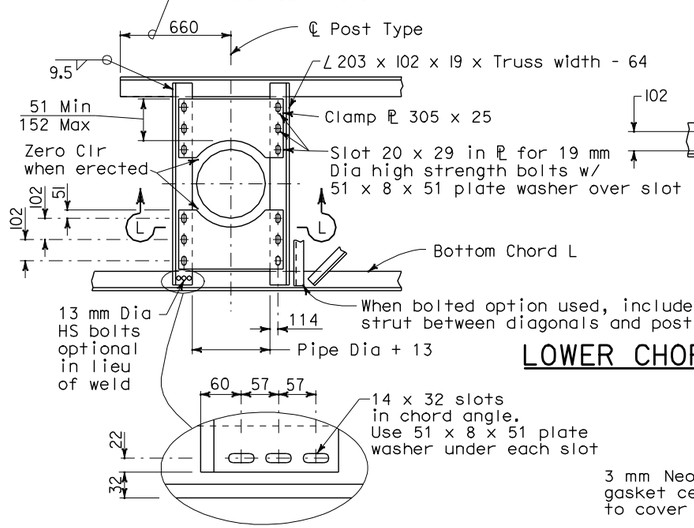

℄ Post Type

∠ 203 x 102 x 19 x Truss width - 64

Clamp ℙ 305 x 25

Slot 20 x 29 in ℙ for 19 mm Dia high strength bolts w/ 51 x 8 x 51 plate washer over slot

Bottom Chord L

When bolted option used, include strut between diagonals and post

13 mm Dia HS bolts optional in lieu of weld

14 x 32 slots in chord angle. Use 51 x 8 x 51 plate washer under each slot

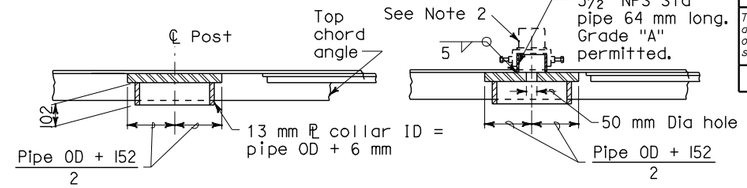

SECTION K-K
Without photoelectric unit

SECTION K-K
With photoelectric unit

UPPER CHORD CONNECTION TO POST

Two Post Type

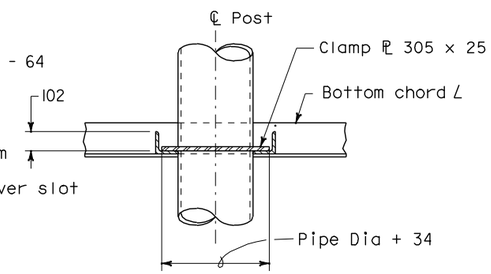

SECTION L-L

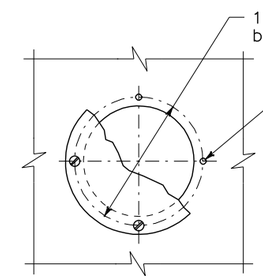

PLAN

TABLE VIII	
Post Type	Bolt Size
II	M22
III	M24
IV	M27
V	M27
VI	M30
VII	M30
VIII	M36
IX	M36

LOWER CHORD CONNECTION TO POST

Two Post Type

Cap ℙ width + 102

Lower junction ℙ width=cap ℙ width

Drill thru juncture ℙ and post ℙ for HS bolts, size as specified in table VIII. Total 4 bolts. See note 3

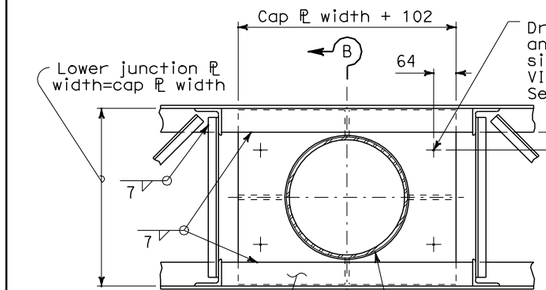

25 Typ, See Note 4.

25 Typ, See Note 4.

Lower juncture ℙ same thickness as corresponding cap ℙ. See RSP S2 Table

Cut thru juncture ℙ for post. Hole diameter = post OD + 25 mm Max

PLAN

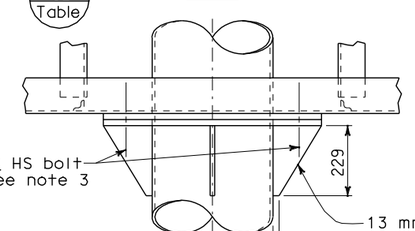

℄ HS bolt See note 3

13 mm Gusset ℙ's 4 required

ELEVATION

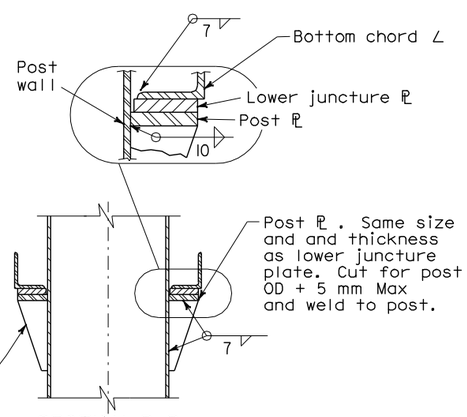

Post ℙ . Same size and and thickness as lower juncture plate. Cut for post OD + 5 mm Max and weld to post.

SECTION B-B

LOWER JUNCTURE CONNECTION

Single Post Type

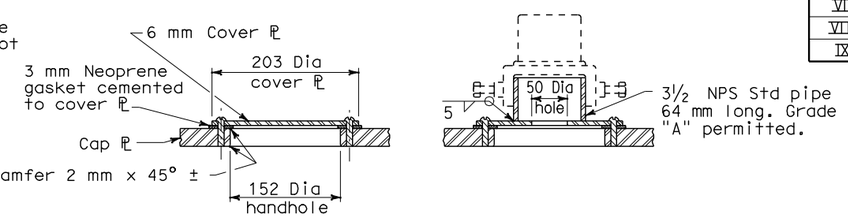

SECTION
Without photoelectric unit

SECTION
With photoelectric unit

BOLT-ACCESS HOLE

Single Post Type

Notes: (Single Post Type)

1. In all cases, truss shall be supported at lower juncture connection. Bearing surface shall be finished true.
2. Post to truss connections shall be fitted in shop.
3. High strength bolts shall be snug tighten. Torque requirements are waived.
4. See Part Plan of Cantilever Type at post on Revised Standard Plan RSP S4.

STATE OF CALIFORNIA
DEPARTMENT OF TRANSPORTATION

OVERHEAD SIGNS-TRUSS FRAME JUNCTURE DETAILS

NO SCALE

ALL DIMENSIONS ARE IN MILLIMETERS UNLESS OTHERWISE SHOWN

RSP S13 DATED JANUARY 24, 2005 SUPERSEDES STANDARD PLAN S13 DATED JULY 1, 2004-PAGE 322 OF THE STANDARD PLANS BOOK DATED JULY 2004.

REVISED STANDARD PLAN RSP S13

2004 REVISED Std PLAN RSP S13

1-24-05