Pole Type	Pole Data				Base Plate Data				"d" 610 mm ø CIDH Pile (m)	Structural Steel kg plus 3.5% Galvanizing
	Height "h" (m)	Min OD (mm)		Thickness (mm)	"C" (mm)	Thickness (mm)	Anchor Bolts (mm)			
		BASE	TOP				SIZE	BC=BOLT CIRCLE		
CCTV 25	7.62	187	98	4.55	305	25.4	25 x 920 x 102	267	1.83	180
CCTV 30	9.14	203	98	4.55	305	25.4	25 x 920 x 102	279	2.13	215
CCTV 35	10.67	219	98	4.55	305	25.4	25 x 920 x 102	305	2.13	250
CCTV 40	12.19	238	98	4.55	330	25.4	32 x 920 x 102	330	2.13	295
CCTV 45	13.72	254	98	4.55	330	25.4	32 x 920 x 102	343	2.44	340

Caltrans Metric

DIST	COUNTY	ROUTE	KILOMETER POST TOTAL PROJECT	SHEET NO.	TOTAL SHEETS

REGISTERED CIVIL ENGINEER

January 24, 2005
PLANS APPROVAL DATE

REGISTERED PROFESSIONAL ENGINEER Tillat Sattar No. C42892 Exp. 03-31-2006 CIVIL STATE OF CALIFORNIA

The State of California or its officers or agents shall not be responsible for the accuracy or completeness of electronic copies of this plan sheet.

To get to the Caltrans web site, go to: http://www.dot.ca.gov

To accompany plans dated _____

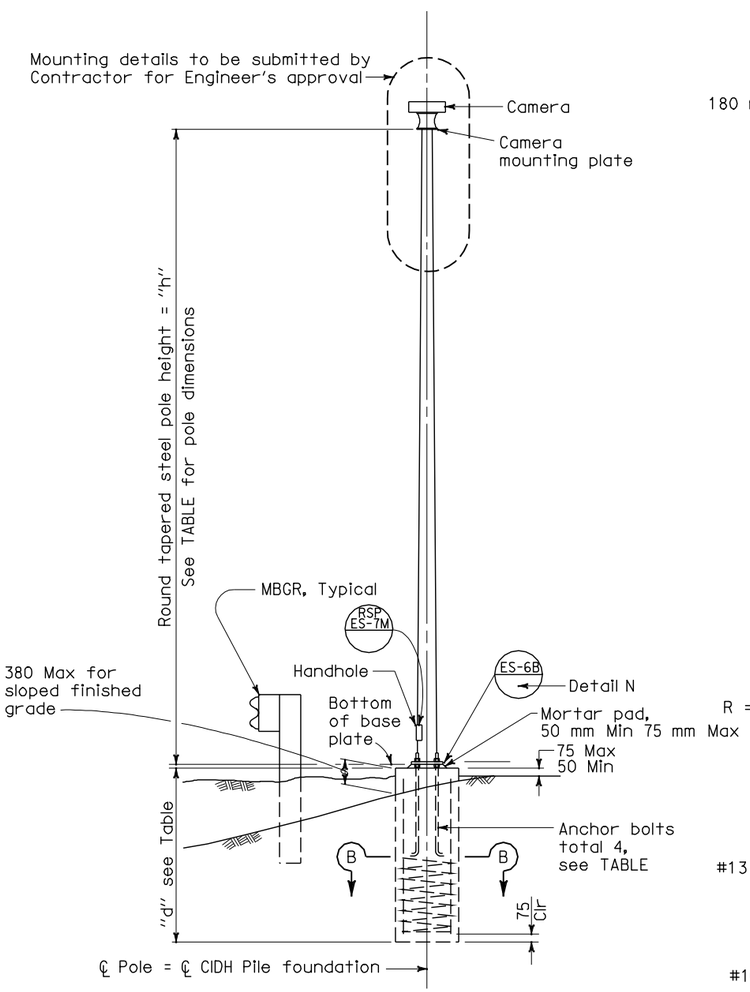

ELEVATION

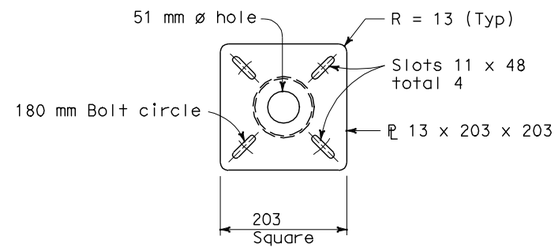

CAMERA MOUNTING PLATE

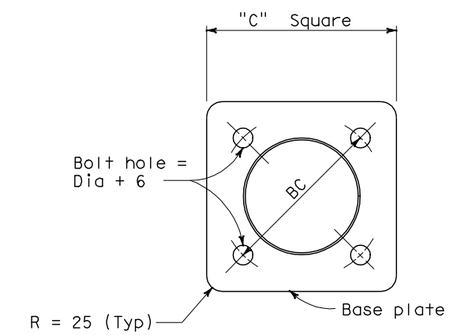

BASE PLATE

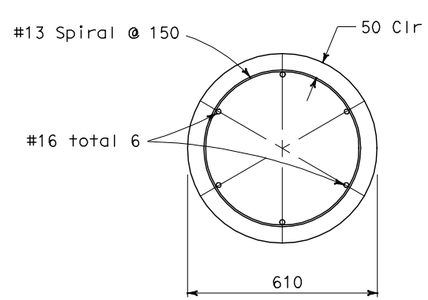

SECTION B-B

GENERAL NOTES:

SPECIFICATIONS

Design : AASHTO Standard specifications for structural supports for highway signs, luminaires and traffic signals dated 2001.

LOADING

Wind Loadings : 161km/h

UNIT STRESSES

Structural Steel : fy = 330 MPa tapered steel tube
fy = 250 MPa unless otherwise noted
Anchor bolts = A307
Reinforced Concrete : f'c = 25 MPa
fy = 415 MPa

NOTES:

1. The Contractor shall verify controlling field dimensions before ordering or fabricating any material.
2. All steel shall be galvanized after fabrication.
3. During pole erection, the post shall be raked as necessary with the use of leveling nuts to provide a plumb pole axis.

STATE OF CALIFORNIA
DEPARTMENT OF TRANSPORTATION

ELECTRICAL SYSTEMS (CLOSED CIRCUIT TELEVISION POLE DETAILS)

NO SCALE

ALL DIMENSIONS ARE IN MILLIMETERS UNLESS OTHERWISE SHOWN

RSP ES-16A DATED JANUARY 24, 2005 SUPERSEDES STANDARD PLAN ES-16A DATED JULY 1, 2004-PAGE 487 OF THE STANDARD PLANS BOOK DATED JULY 2004.

REVISED STANDARD PLAN RSP ES-16A

2004 REVISED Std PLAN RSP ES-16A

1-24-05