DIST	COUNTY	ROUTE	KILOMETER POST TOTAL PROJECT	SHEET NO.	TOTAL SHEETS

To accompany plans dated _____

Caltrans Metric

REGISTERED CIVIL ENGINEER

January 24, 2005
PLANS APPROVAL DATE

REGISTERED PROFESSIONAL ENGINEER — Tillat Sattar — No. C42892 — Exp. 03-31-2006 — CIVIL — STATE OF CALIFORNIA

The State of California or its officers or agents shall not be responsible for the accuracy or completeness of electronic copies of this plan sheet.

To get to the Caltrans web site, go to: http://www.dot.ca.gov

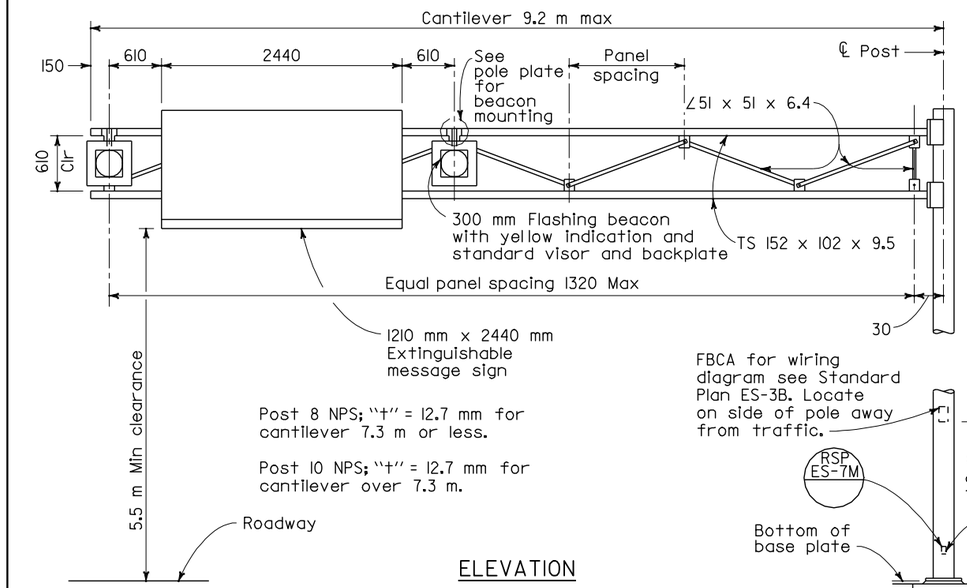

Post 8 NPS; "t" = 12.7 mm for cantilever 7.3 m or less.

Post 10 NPS; "t" = 12.7 mm for cantilever over 7.3 m.

ELEVATION

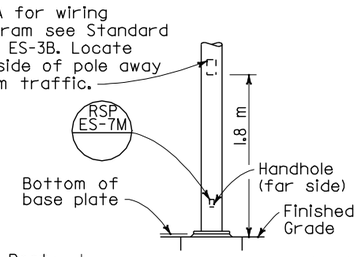

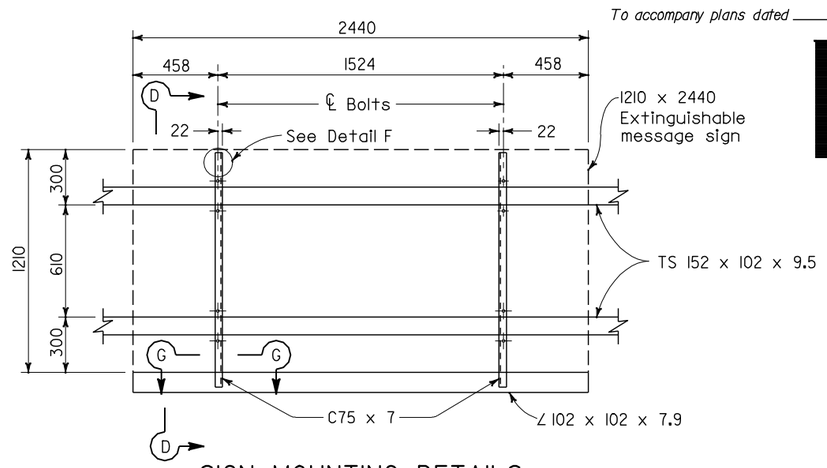

SIGN MOUNTING DETAILS

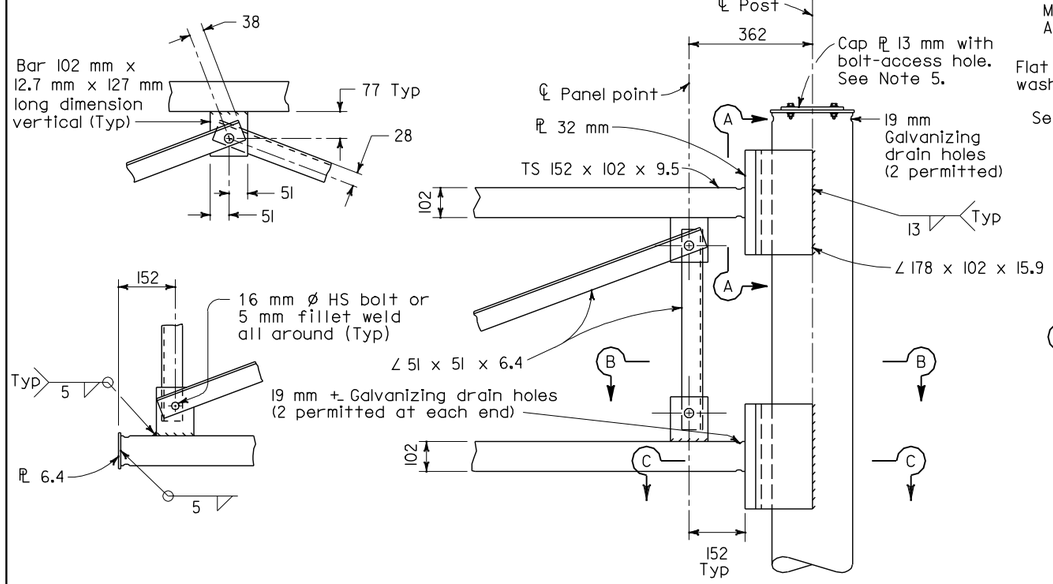

TRUSS FRAME CONNECTION DETAILS

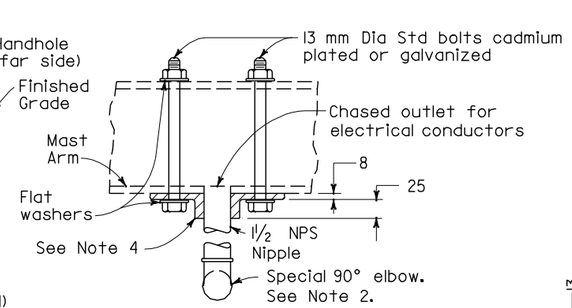

SECTION E-E

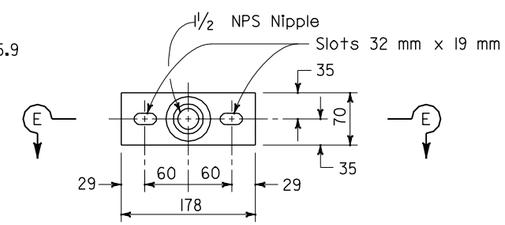

ELEVATION

POLE PLATE FOR BEACON MOUNTING

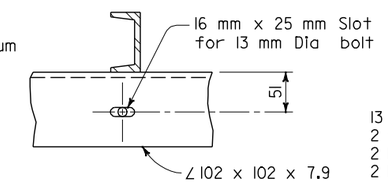

SECTION G-G

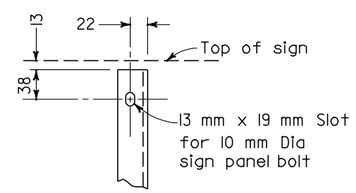

DETAIL F

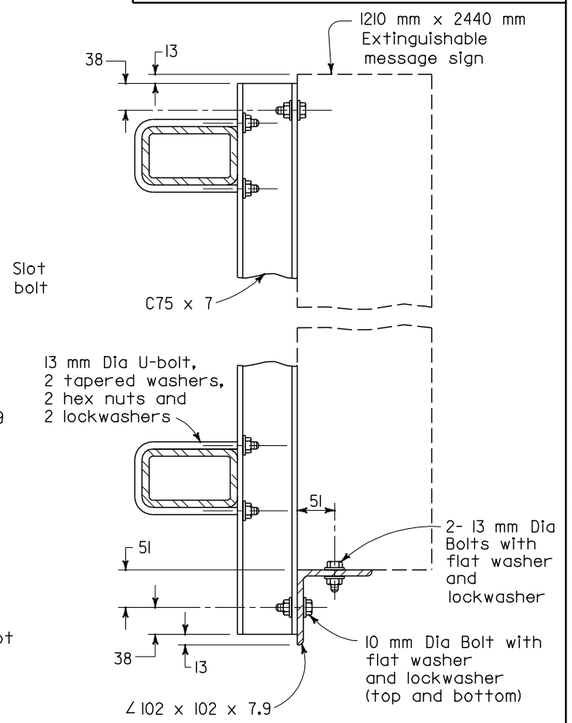

SECTION D-D

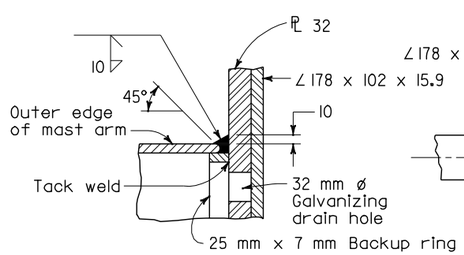

SECTION C-C

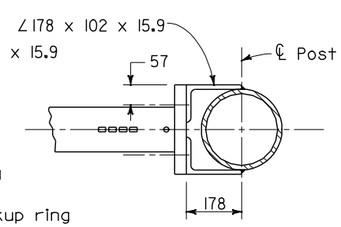

SECTION B-B

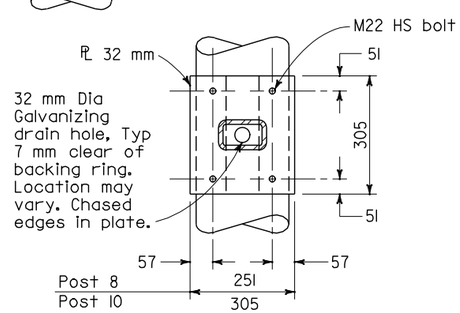

SECTION A-A

NOTES

1. For general notes, base plates, anchor bolts and foundations refer to Lightweight Signs, Post Details and Foundation Details sheets of the Standard Plans.
2. For details of special 90° elbow, see Standard Plans ES-4D.
3. For sign structure dimensions, see Project Plans.
4. Pole plate shall be bronze, aluminum or ductile iron as specified in the Standard Specifications.
5. For Bolt-Access Hole Details, see Overhead Signs-Truss Frame Juncture Details.

STATE OF CALIFORNIA
DEPARTMENT OF TRANSPORTATION

ELECTRICAL SYSTEMS EXTINGUISHABLE MESSAGE SIGN AND FLASHING BEACONS

NO SCALE

ALL DIMENSIONS ARE IN MILLIMETERS UNLESS OTHERWISE SHOWN

RSP ES-14C DATED JANUARY 24, 2005 SUPERSEDES STANDARD PLAN ES-14C DATED JULY 1, 2004-PAGE 482 OF THE STANDARD PLANS BOOK DATED JULY 2004.

REVISED STANDARD PLAN RSP ES-14C

2004 REVISED Std PLAN RSP ES-14C

1-24-05