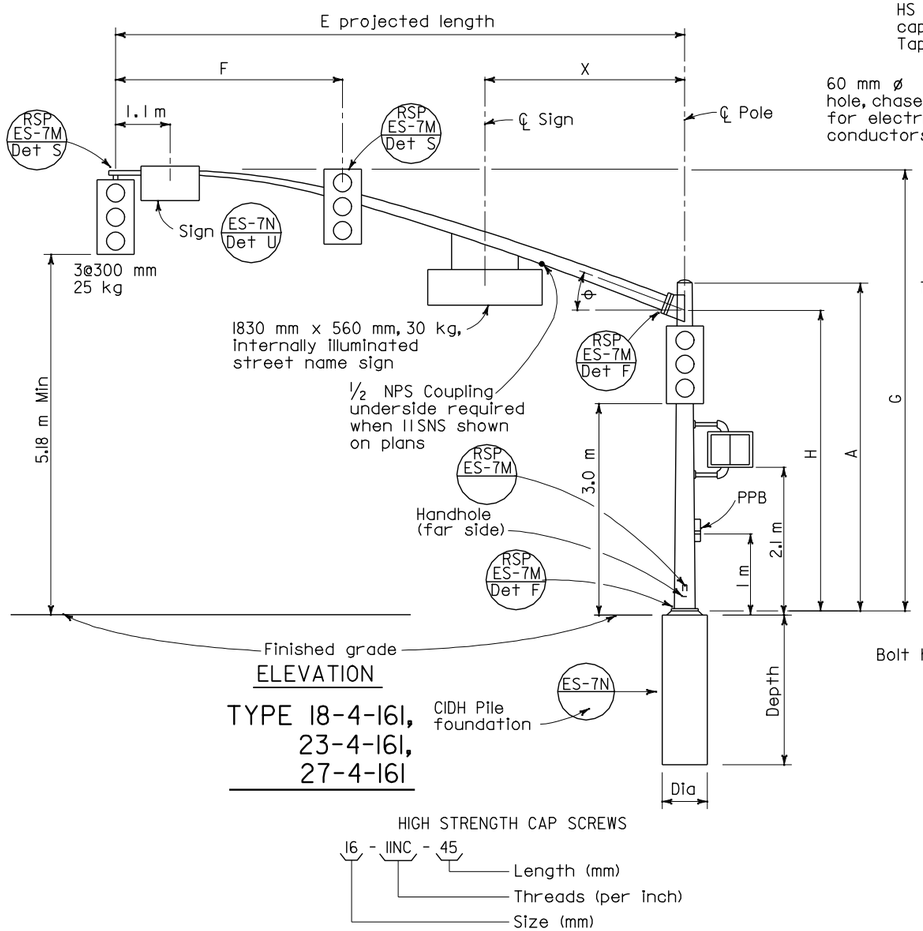

ELEVATION

TYPE 18-4-161, 23-4-161, 27-4-161

HIGH STRENGTH CAP SCREWS

16 - 11NC - 45

Length (mm)

Threads (per inch)

Size (mm)

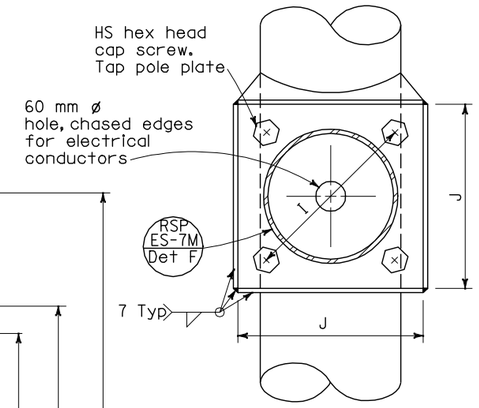

SECTION A-A

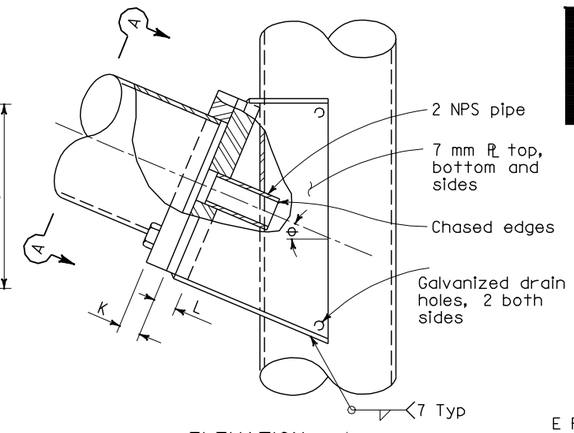

ELEVATION

SIGNAL ARM CONNECTION DETAILS

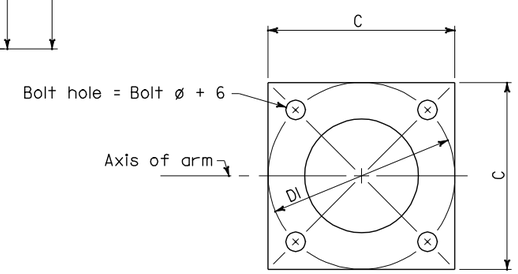

BASE PLATE

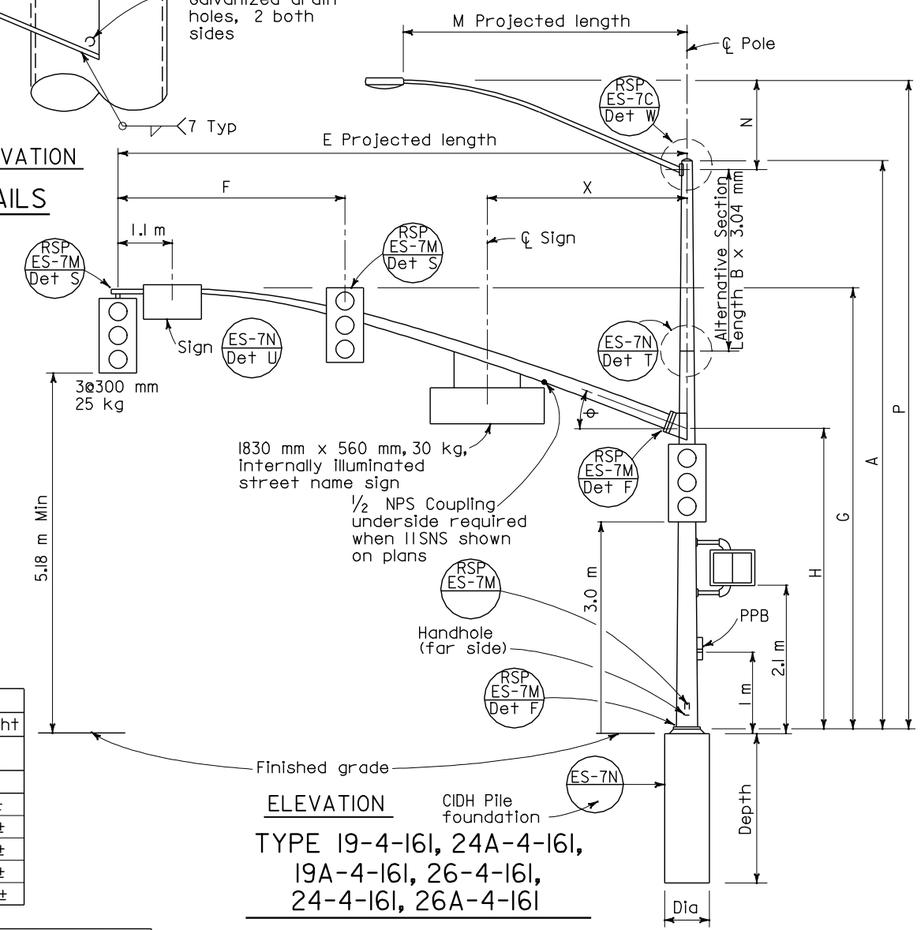

ELEVATION

TYPE 19-4-161, 24A-4-161, 19A-4-161, 26-4-161, 24-4-161, 26A-4-161

SIGNAL ARM DATA												
E Projected Length	F Min Spacing	G Mounting Height	H	Min OD At Pole	Thickness	I Bolt Circle	HS Cap Screws	J Plate Size	K Arm ⅊ Thickness	L Pole ⅊ Thickness	⊖	X Max
m				mm								m
7.6	3.1	6.9 ±	4.88	186	6.07	305	32-7NC-76	305	32	38	23°	3.2
9.1	3.7	7.0 ±		203								
10.7	4.3			222		343		343	38	45	21°	
12.2	4.6			238							15°	4.0
13.7		7.2 ±		260								

LUMINAIRE ARM DATA					
M Projected Length	N Rise	Min OD at Pole	Thickness	P Mounting Height 9.1 Pole	P Mounting Height 10.7 Pole
m	mm			m	
1.8	610 ±	83	3.04	9.5 ±	11.1 ±
2.4	760 ±	89		9.7 ±	11.3 ±
3.1	990 ±	98		9.9 ±	11.5 ±
3.7	1290 ±			10.2 ±	11.8 ±
4.6	1450 ±	108		10.4 ±	12.0 ±

Pole Type	Load Case	Wind Velocity km/h	POLE DATA: A Height	Min OD Base	Min OD Top	Thickness	Alternative Section B Length	Alternative Section Bottom	Alternative Section Top	BASE PLATE DATA: C	DI Bolt Circle	Thickness	Anchor Bolts Size	Luminaire Arm	Signal Arm	CIDH PILE FOUNDATION: Diameter	Depth	Reinforced
			m	mm			m	mm		mm				m		mm	m	
18-4-161	4	161	5.2	305	229	6.07	None	238		457	457	38	51ø x 1067 x 152	None	7.6 or 9.1	914	2.7	Yes
19-4-161			9.1		203		3.1		203					1.8-4.6 3.7				
19A-4-161			10.7		186		4.6		186					1.8-4.6 4.6				
23-4-161			5.2		229		None							None	10.7			
24-4-161			9.1		203		3.1	238	203					1.8-4.6 3.7				
24A-4-161			10.7		186		4.6		186					1.8-4.6 4.6				
26-4-161			9.1	318	203	7.94	3.1	248	213					1.8-4.6 3.7	12.2 or 13.7			
26A-4-161			10.7		186		4.6		196					1.8-4.6 4.6				
27-4-161			5.2		248		None							None				

☐ Indicates arm length to be used unless otherwise noted on plans.

DIST	COUNTY	ROUTE	KILOMETER POST TOTAL PROJECT	SHEET NO.	TOTAL SHEETS

REGISTERED CIVIL ENGINEER

January 24, 2005
PLANS APPROVAL DATE

REGISTERED PROFESSIONAL ENGINEER Tillat Sattar No. C42892 Exp. 03-31-06 CIVIL STATE OF CALIFORNIA

The State of California or its officers or agents shall not be responsible for the accuracy or completeness of electronic copies of this plan sheet.

To get to the Caltrans web site, go to: http://www.dot.ca.gov

To accompany plans dated _____

STATE OF CALIFORNIA
DEPARTMENT OF TRANSPORTATION

ELECTRICAL SYSTEMS (SIGNAL AND LIGHTING STANDARDS CASE 4 ARM LOADING WIND VELOCITY=161 km/h ARM LENGTHS 7.6 m TO 13.7 m)

NO SCALE

ALL DIMENSIONS ARE IN MILLIMETERS UNLESS OTHERWISE SHOWN

RSP ES-7F DATED JANUARY 24, 2005 SUPERSEDES STANDARD PLAN ES-7F DATED JULY 1, 2004-PAGE 456 OF THE STANDARD PLANS BOOK DATED JULY 2004.

REVISED STANDARD PLAN RSP ES-7F

2004 REVISED Std PLAN RSP ES-7F

1-24-05