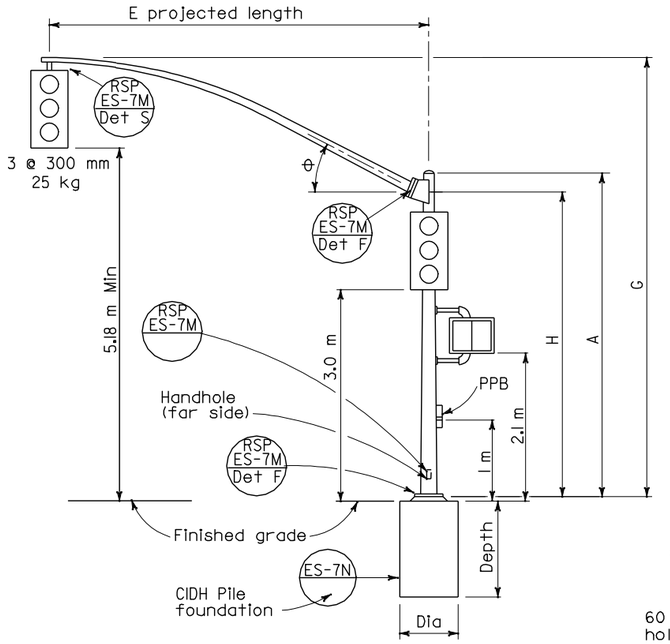


ELEVATION

TYPE 18-1-161

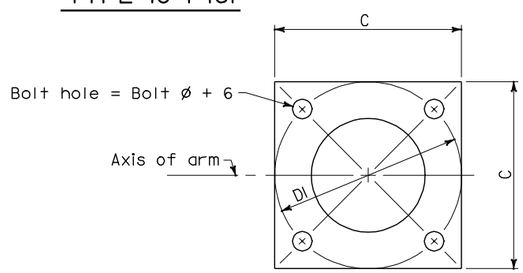


BASE PLATE

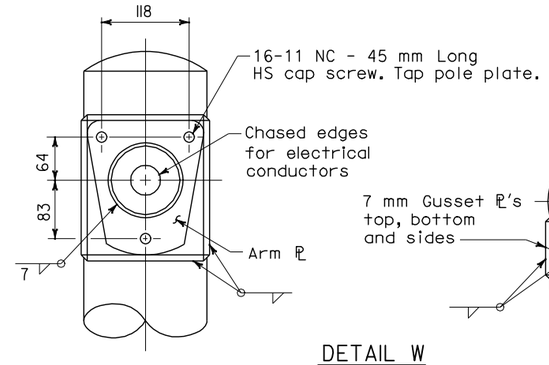


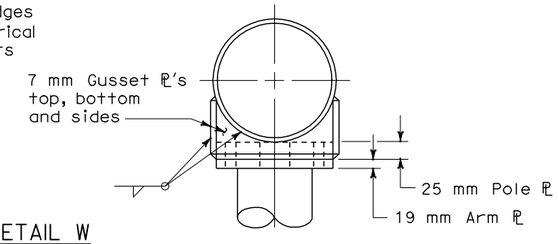


DETAIL W

LUMINAIRE ARM CONNECTION

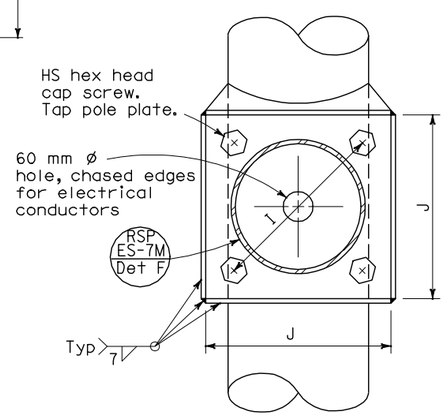


SECTION A-A

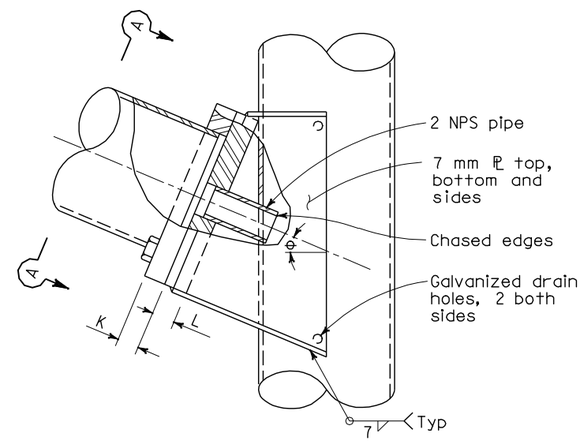


ELEVATION

SIGNAL ARM CONNECTION DETAILS

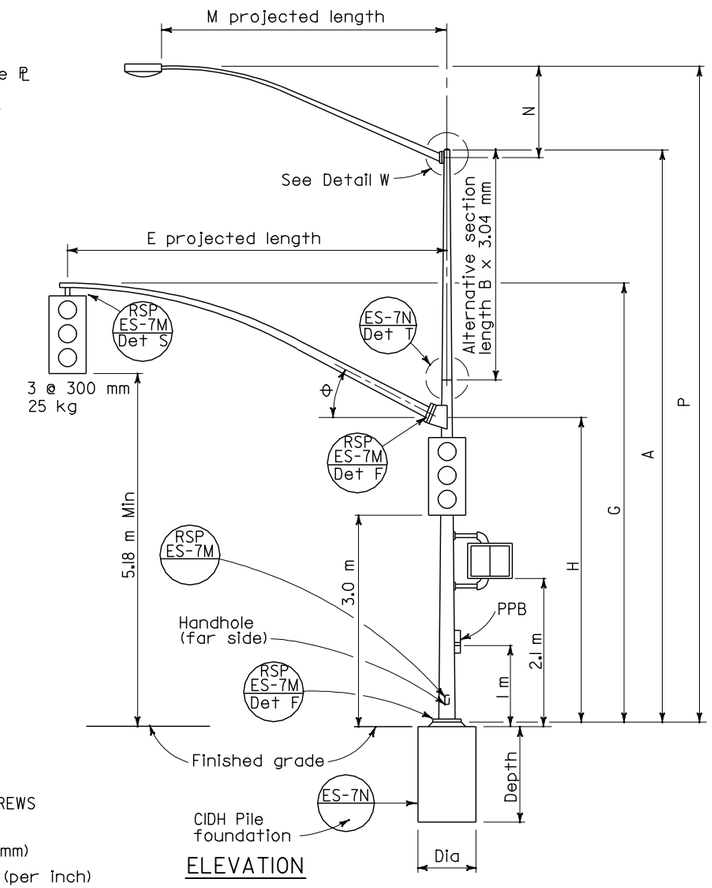


ELEVATION

TYPE 19-1-161, 19A-1-161

HIGH STRENGTH CAP SCREWS

16 - 11NC - 45

- Length (mm)
- Threads (per inch)
- Size (mm)

| SIGNAL ARM DATA | | | | | | | | | | |
|---|---|---|---|---|---|---|---|---|---|---|
| E Projected Length | G Mounting Height | H | Min OD At Pole | Thickness | I Bolt Circle | HS Cap Screws | J Plate Size | K Arm ℙ Thickness | L Pole ℙ Thickness | θ |
| m | | | mm | | | | | | | |
| 4.6 | 6.8 ± | 4.9 | 178 | 3.04 | 305 | 32-7NC-76 | 305 | 32 | 38 | 23° |
| 6.1 | 6.6 ± | | 181 | | | | | | | |
| 7.6 | 6.9 ± | | 186 | | | | | | | |
| 9.1 | 7.0 ± | | 203 | | | | | | | |

| LUMINAIRE ARM DATA | | | | | |
|---|---|---|---|---|---|
| M Projected Length | N Rise | Min OD at Pole | Thickness | P Mounting Height | |
| | | | | 9.1 Pole | 10.7 Pole |
| m | mm | | | m | |
| 1.8 | 610 ± | 83 | 3.04 | 9.5 ± | 11.1 ± |
| 2.4 | 760 ± | 89 | | 9.7 ± | 11.3 ± |
| 3.1 | 990 ± | 98 | | 9.9 ± | 11.5 ± |
| 3.7 | 1290 ± | | | 10.2 ± | 11.8 ± |
| 4.6 | 1450 ± | 108 | | 10.4 ± | 12.0 ± |

| Pole Type | Load Case | Wind Velocity km/h | POLE DATA | | | | | | | BASE PLATE DATA | | | | Luminaire Arm | Signal Arm | CIDH PILE FOUNDATION | | |
|---|---|---|---|---|---|---|---|---|---|---|---|---|---|---|---|---|---|---|
| | | | A Height | Min OD | | Thickness | Alternative Section | | | C | DI Bolt Circle | Thickness | Anchor Bolts | | | Diameter | Depth | Reinforced |
| | | | | Base | Top | | B Length | Bottom | Top | | | | Size | | | | | |
| | | | m | mm | | | m | mm | | mm | | | | m | | mm | m | |
| 18-1-161 | 1 | 161 | 5.2 | 273 | 214 | 4.55 | None | 203 | 168 | 457 | 445 | 32 | 38 ø x 925 x 152 | None | 4.6 to 9.1 | 760 | 2.2 | Yes |
| 19-1-161 | | | 9.1 | | 168 | | 3.0 | | | | | | | 1.8-4.6 [3.7] | | | | |
| 19A-1-161 | | | 10.7 | | 151 | | 4.6 | | 151 | | | | | 1.8-4.6 [4.6] | | | | |

☐ Indicates arm length to be used unless otherwise noted on plans.

To accompany plans dated _____

Caltrans Metric

| DIST | COUNTY | ROUTE | KILOMETER POST TOTAL PROJECT | SHEET NO. | TOTAL SHEETS |
|---|---|---|---|---|---|
| | | | | | |

REGISTERED CIVIL ENGINEER

January 24, 2005
PLANS APPROVAL DATE

REGISTERED PROFESSIONAL ENGINEER — Tillat Sattar — No. C42892 — Exp. 03-31-06 — CIVIL — STATE OF CALIFORNIA

*The State of California or its officers or agents shall not be responsible for the accuracy or completeness of electronic copies of this plan sheet.*

*To get to the Caltrans web site, go to: http://www.dot.ca.gov*

STATE OF CALIFORNIA
DEPARTMENT OF TRANSPORTATION

# ELECTRICAL SYSTEMS (SIGNAL AND LIGHTING STANDARDS CASE 1 ARM LOADING WIND VELOCITY=161 km/h ARM LENGTHS 4.6 m TO 9.1 m)

NO SCALE

ALL DIMENSIONS ARE IN MILLIMETERS UNLESS OTHERWISE SHOWN

RSP ES-7C DATED JANUARY 24, 2005 SUPERSEDES STANDARD PLAN ES-7C DATED JULY 1, 2004-PAGE 453 OF THE STANDARD PLANS BOOK DATED JULY 2004.

**REVISED STANDARD PLAN RSP ES-7C**

**2004 REVISED Std PLAN RSP ES-7C**

1-24-05