DIST	COUNTY	ROUTE	KILOMETER POST TOTAL PROJECT	SHEET NO.	TOTAL SHEETS

REGISTERED CIVIL ENGINEER

April 28, 2005
PLANS APPROVAL DATE

REGISTERED PROFESSIONAL ENGINEER NAHED ABDIN No. C48719 Exp. 9-30-06 CIVIL STATE OF CALIFORNIA

The State of California or its officers or agents shall not be responsible for the accuracy or completeness of electronic copies of this plan sheet.

To get to the Caltrans web site, go to: http://www.dot.ca.gov

To accompany plans dated _____

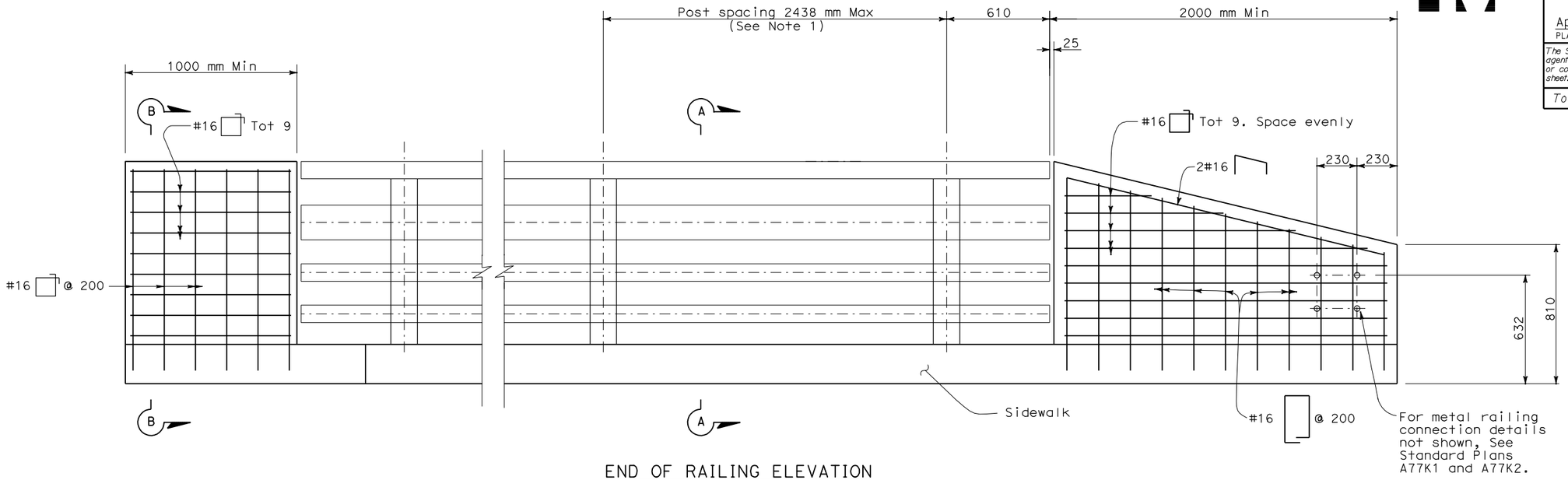

END OF RAILING ELEVATION

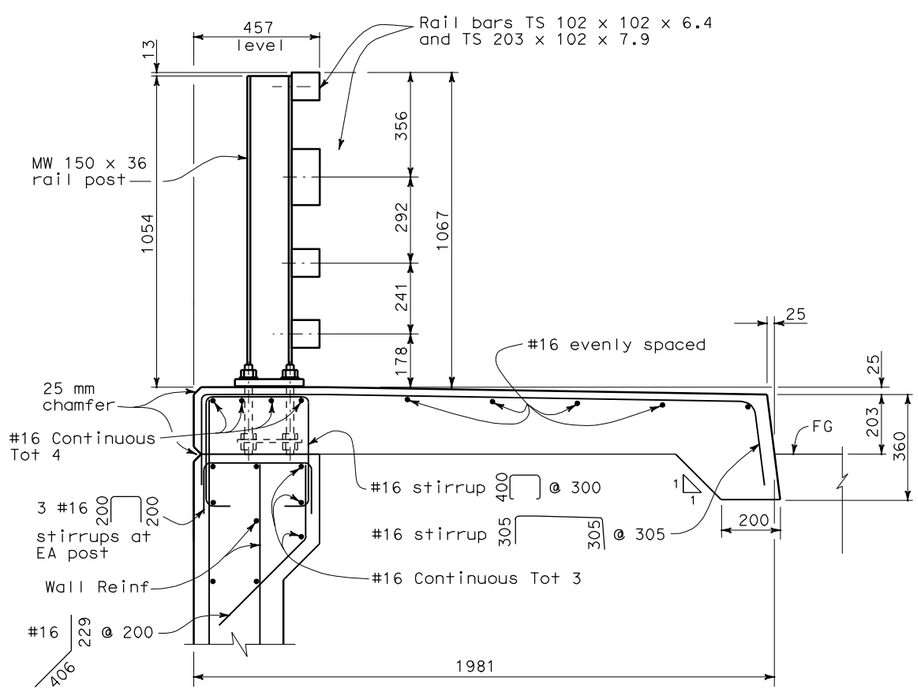

SECTION A-A

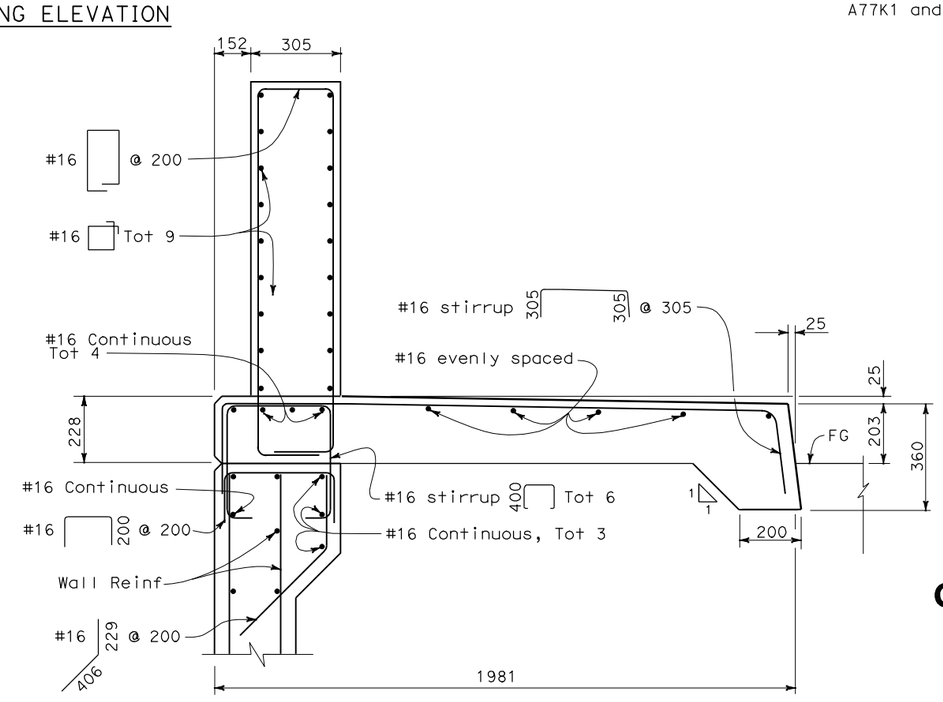

SECTION B-B

NOTE

Post spacing and/or end block length to be adjusted to fit bridge length or approach slab.

STATE OF CALIFORNIA
DEPARTMENT OF TRANSPORTATION

CALIFORNIA ST-40 BRIDGE RAIL (SHEET 2 OF 2)

NO SCALE

ALL DIMENSIONS ARE IN MILLIMETERS UNLESS OTHERWISE SHOWN

RSP B11-67 DATED APRIL 28, 2005 SUPERSEDES STANDARD PLAN B11-67 DATED JULY 1, 2004-PAGE 283 OF THE STANDARD PLANS BOOK DATED JULY 2004.

REVISED STANDARD PLAN RSP B11-67

2004 REVISED Std PLAN RSP B11-67

04-26-05