DIST	COUNTY	ROUTE	POST MILES TOTAL PROJECT	SHEET NO.	TOTAL SHEETS

REGISTERED CIVIL ENGINEER

January 18, 2008
PLANS APPROVAL DATE

REGISTERED PROFESSIONAL ENGINEER Raymond Don Tsztoo No. C37332 Exp. 6-30-08 CIVIL STATE OF CALIFORNIA

The State of California or its officers or agents shall not be responsible for the accuracy or completeness of electronic copies of this plan sheet.

To accompany plans dated _____

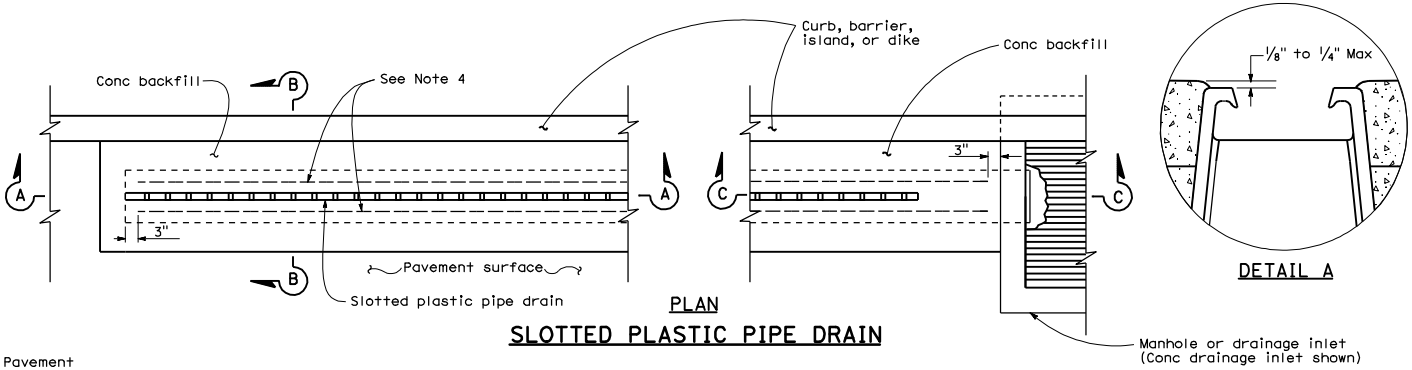

PLAN

SLOTTED PLASTIC PIPE DRAIN

DETAIL A

NOTES:

1. Plastic weld shall be factory fabricated.
2. When Heel Resistant Grate is to be used, see New Standard Plan NSP D98E for details.
3. Exterior wall stiffener ridges and details not shown on section views. See transition fitting detail for typical exterior ridges and throat stiffeners.
4. Lateral support, #4 bar, to be placed on both sides of slotted plastic pipe.

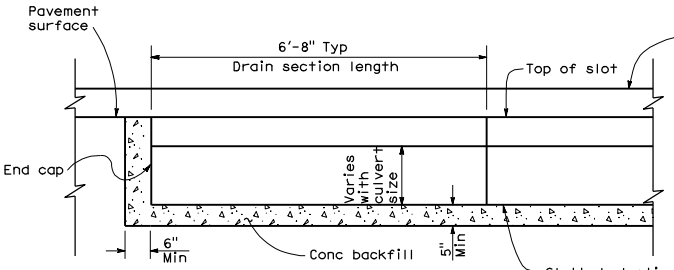

SECTION A-A

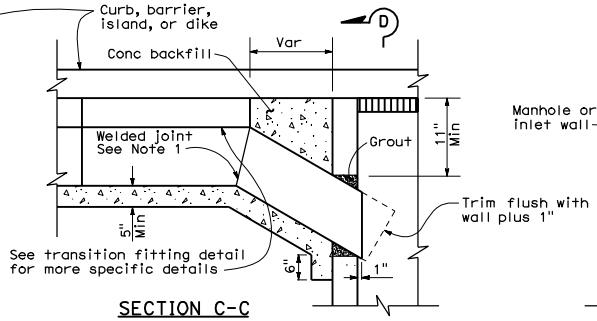

SECTION C-C

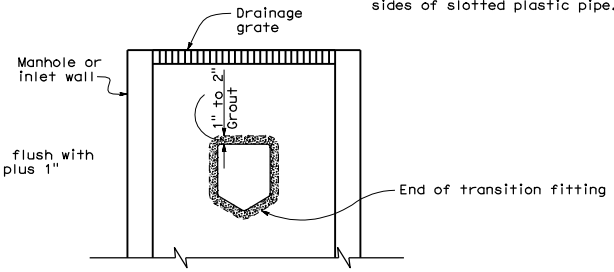

SECTION D-D

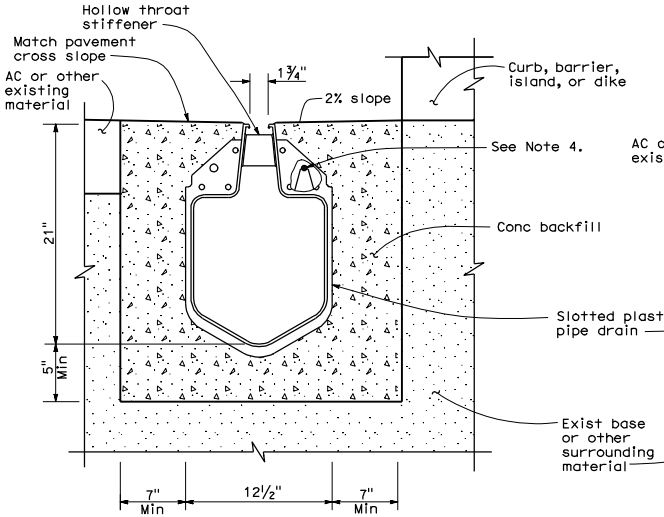

SECTION B-B
18" Slotted Plastic Pipe Drain

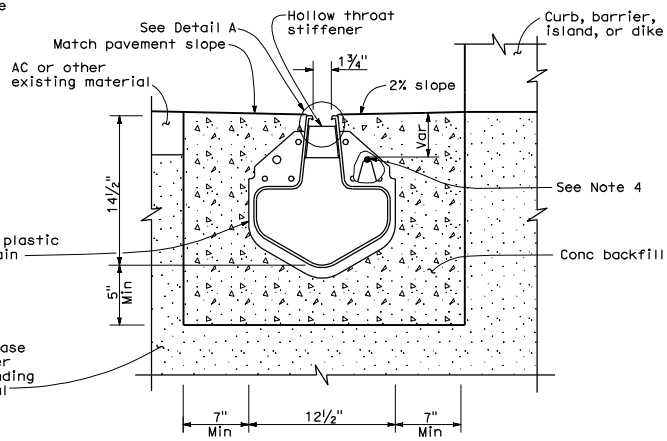

SECTION B-B
12" Slotted Plastic Pipe Drain

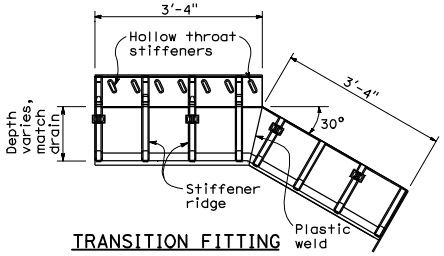

TRANSITION FITTING
with stiffeners and details shown

STATE OF CALIFORNIA
DEPARTMENT OF TRANSPORTATION

SLOTTED PLASTIC PIPE DRAIN DETAILS

NO SCALE

NSP D98D DATED JANUARY 18, 2008 SUPPLEMENTS THE STANDARD PLANS BOOK DATED MAY 2006.

NEW STANDARD PLAN NSP D98D

2006 NEW STANDARD PLAN NSP D98D

11-5-07

DIST	COUNTY	ROUTE	POST MILES TOTAL PROJECT	SHEET NO.	TOTAL SHEETS

REGISTERED CIVIL ENGINEER

January 18, 2008
PLANS APPROVAL DATE

The State of California or its officers or agents shall not be responsible for the accuracy or completeness of electronic copies of this plan sheet.

REGISTERED PROFESSIONAL ENGINEER Raymond Don Tazioo No. C37332 Exp. 6-30-08 CIVIL STATE OF CALIFORNIA

To accompany plans dated _____

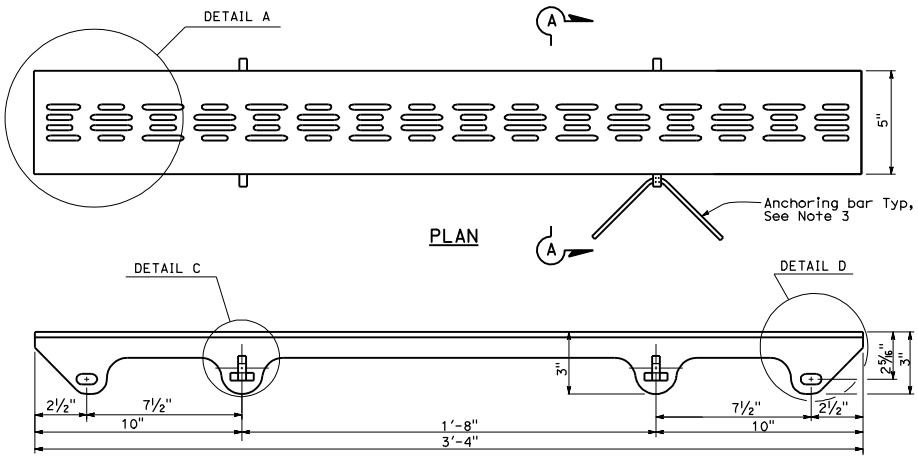

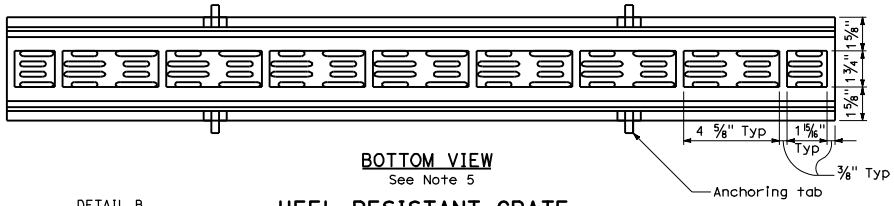

HEEL RESISTANT GRATE

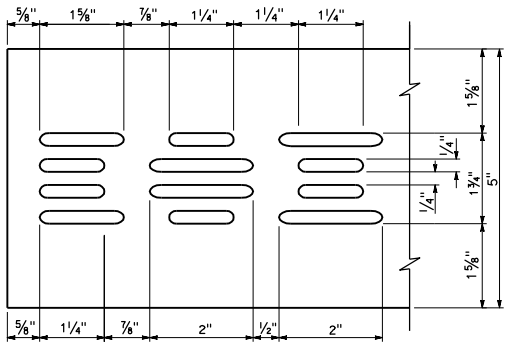

DETAIL A

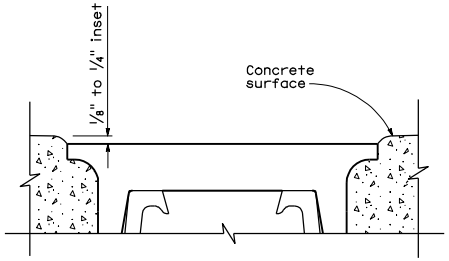

DETAIL B

NOTES:

1. Grate patterns may vary from detail shown. See special provisions for requirements.
2. 3/16" maximum gap between adjacent gratings.
3. Use anchoring bar through each anchoring tab to anchor heel resistant grate to concrete backfill. 4 locations for each grate section.
4. Use 3/8" diameter bolt, nut, and washer to hold grate to slotted drain, prior to backfilling with concrete. 4 locations.
5. Anchoring bars are not shown.

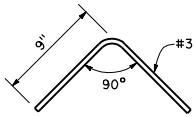

ANCHORING BAR DETAIL
See Note 3

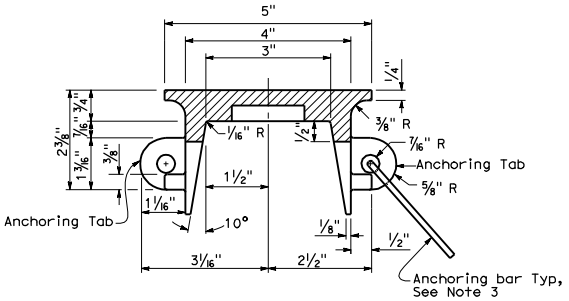

SECTION A-A

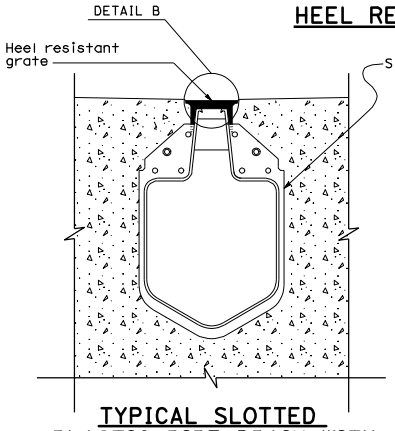

TYPICAL SLOTTED PLASTIC PIPE DRAIN WITH HEEL RESISTANT GRATE

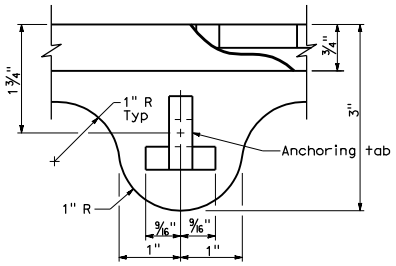

DETAIL C

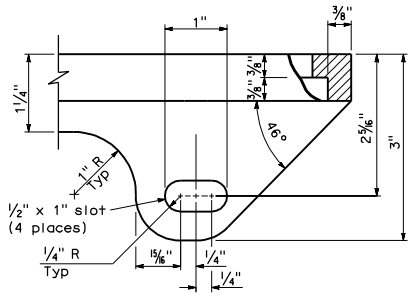

DETAIL D
See Note 4

STATE OF CALIFORNIA
DEPARTMENT OF TRANSPORTATION

HEEL RESISTANT GRATE FOR SLOTTED PLASTIC PIPE DRAIN

NO SCALE

NSP D98E DATED JANUARY 18, 2008 SUPPLEMENTS THE STANDARD PLANS BOOK DATED MAY 2006.

NEW STANDARD PLAN NSP D98E

2006 NEW STANDARD PLAN NSP D98E

11-19-07

DIST	COUNTY	ROUTE	POST MILES TOTAL PROJECT	SHEET NO.	TOTAL SHEETS

REGISTERED ~~CIVIL~~ ENGINEER

January 18, 2008
PLANS APPROVAL DATE

REGISTERED PROFESSIONAL ENGINEER — Tillat Satter — No. C42892 — Exp. 03-31-08 — CIVIL — STATE OF CALIFORNIA

The State of California or its officers or agents shall not be responsible for the accuracy or completeness of electronic copies of this plan sheet.

To accompany plans dated _____

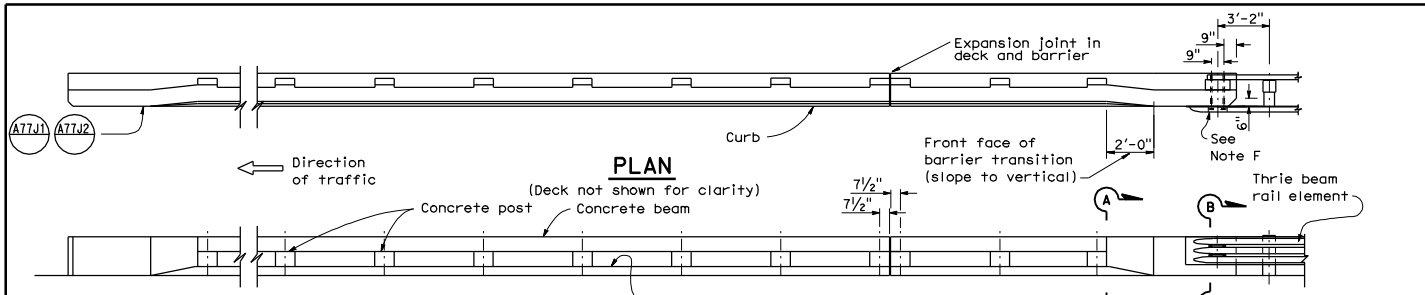

PLAN
(Deck not shown for clarity)

ELEVATION

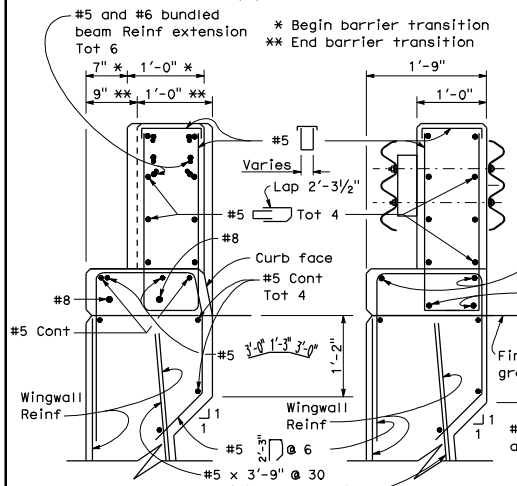

SECTION A-A

SECTION B-B

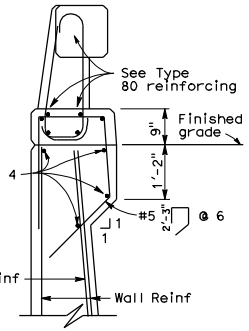

TYPE 80A

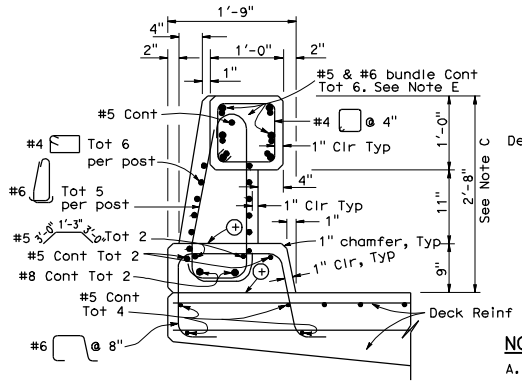

TYPE 80
⊕ Construction joint

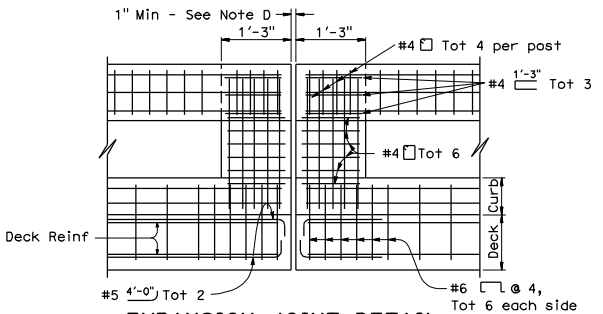

EXPANSION JOINT DETAIL

NOTES:

A. Walls are to be backfilled before the barrier is placed.

B. Longitudinal reinforcing steel to stop at all expansion joints.

C. The front face dimensions are to be constant above the finish roadway profile, but the overall height will vary with certain thicknesses of surfacing and roadway slopes.

D. Expansion joint to match deck joint.

E. No lap splicing allowed on the longitudinal rail reinforcing. Splicing shall be staggered.

F. For typical metal railing connection details not shown, see Standard Plans A77J1 and A77J2.

G. Chain link railing is not allowed on Type 80 Barriers.

H. Post to be spaced equally, typically 6'-6" spacing. Post spacing may be reduced where location of hinges or expansion joints or the length of wingwalls will not accommodate the 6'-6" spacing. Maximum see-through availability is to be strived for, where 6'-6" post spacing can not be achieved.

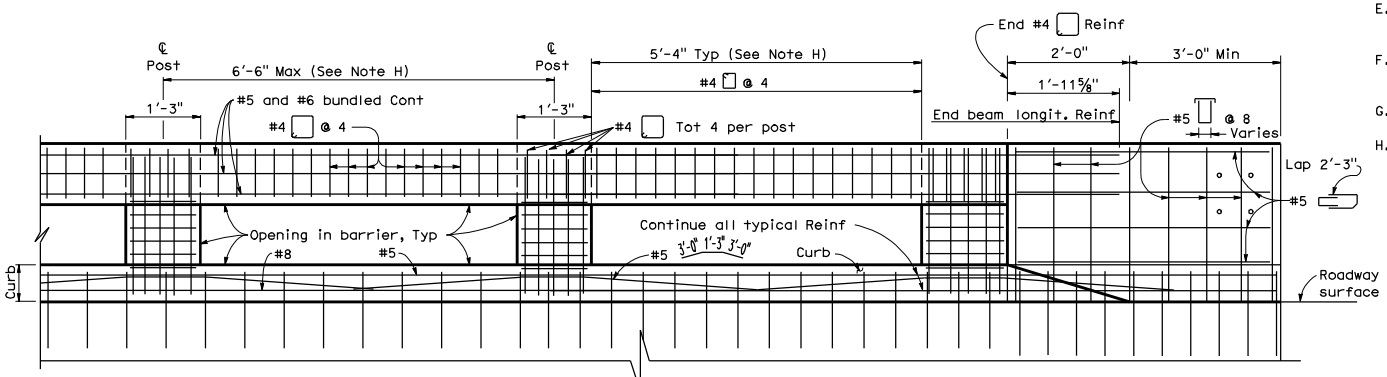

LONGITUDINAL SECTION
(Deck or wingwall reinforcing not shown)

STATE OF CALIFORNIA
DEPARTMENT OF TRANSPORTATION

CONCRETE BARRIER TYPE 80 (SHEET 1 OF 2)

NO SCALE

RSP B11-60 DATED JANUARY 18, 2008 SUPERSEDES STANDARD PLAN B11-60 DATED MAY 1, 2006 - PAGE 276 OF THE STANDARD PLANS BOOK DATED MAY 2006.

REVISED STANDARD PLAN RSP B11-60

10-22-07

To accompany plans dated _____

DIST	COUNTY	ROUTE	POST MILES TOTAL PROJECT	SHEET NO.	TOTAL SHEETS

REGISTERED ~~CIVIL~~ ENGINEER

January 18, 2008
PLANS APPROVAL DATE

REGISTERED PROFESSIONAL ENGINEER — Tilliat Satter — No. C42892 — Exp. 03-31-08 — CIVIL — STATE OF CALIFORNIA

The State of California or its officers or agents shall not be responsible for the accuracy or completeness of electronic copies of this plan sheet.

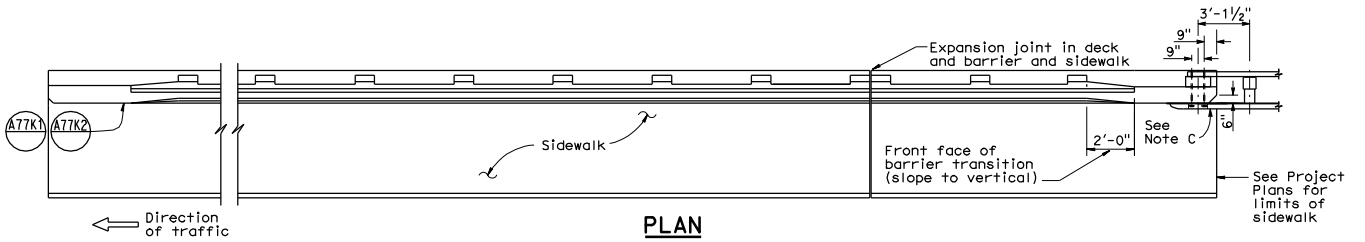

PLAN

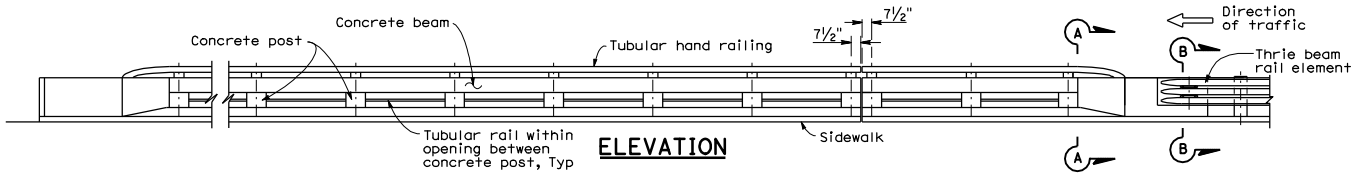

ELEVATION

NOTES:

A. No lap splicing allowed on the longitudinal rail reinforcing. Splicing shall be staggered.

B. For electrical details, see Revised Standard Plans RSP ES-9A and RSP ES-9C and Standard Plans ES-9B, ES-9D and ES-9E. See Project Plans for electrical layout.

C. For typical metal railing connection details not shown, see Standard Plans A77K1 and A77K2.

D. A minimum of two - 5" round openings are required for future utilities in addition to those on other plan sheets. Openings are to be sealed at ends and extended 8" minimum past end of sidewalk if not used. Duct forms are to be tied down.

E. Chain link railing is not allowed on Type 80SW Barrier.

F. Walls are to be backfilled before railing is placed.

G. Terminate all longitudinal curb, sidewalk, and deck reinforcement in standard 90° hooks.

H. Dimensions will vary with cross slope and with certain thickness of surfacing.

I. Expansion joint to match deck joint, see Standard Plan B11-63 for expansion joint details.

J. This barrier is to be used only for speeds of 45 MPH or less. For speeds greater than 45 MPH, pedestrians should be protected by a separation traffic barrier.

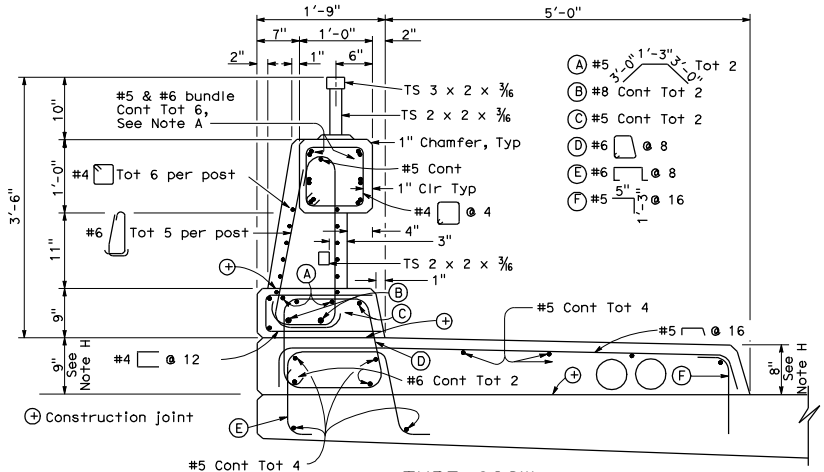

TYPE 80SW

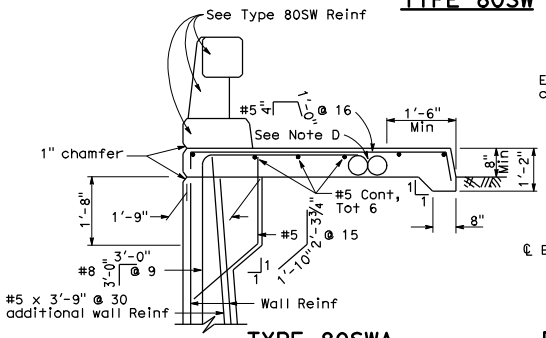

TYPE 80SWA

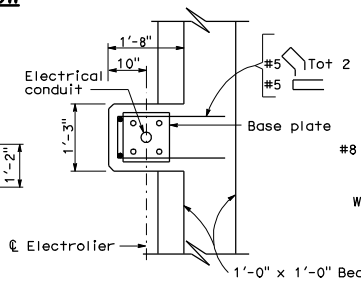

PLAN VIEW

ELECTROLIER PEDESTAL

* Begin barrier transition
** End barrier transition

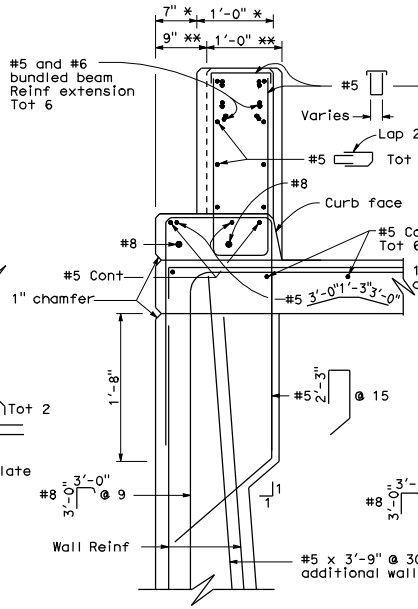

SECTION A-A
(Tubular hand railing not shown)

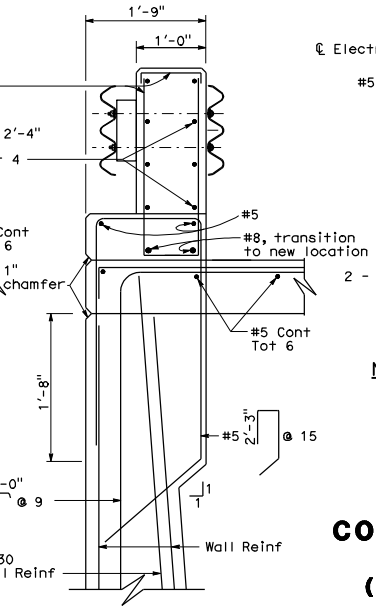

SECTION B-B

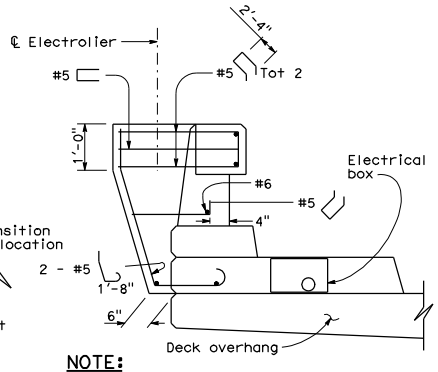

NOTE:
Pedestal design for 1'-0" base plate.

BARRIER MODIFICATION FOR ELECTROLIER

STATE OF CALIFORNIA
DEPARTMENT OF TRANSPORTATION

CONCRETE BARRIER TYPE 80SW (SHEET 1 OF 3)

NO SCALE

RSP B11-62 DATED JANUARY 18, 2008 SUPERSEDES STANDARD PLAN B11-62 DATED MAY 1, 2006 - PAGE 278 OF THE STANDARD PLANS BOOK DATED MAY 2006.

REVISED STANDARD PLAN RSP B11-62

2006 REVISED STANDARD PLAN RSP B11-62

10-22-07

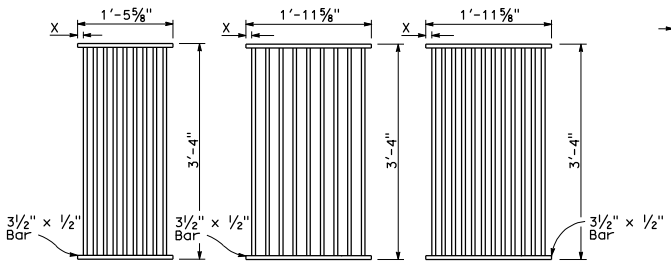

TYPE 18-9
1⅜" Clear spacing. Use within the roadbed on highways where bicycles and pedestrians are excluded.

TYPE 24-9
2" Clear spacing. Use in locations off the roadbed on all types of highways.

TYPE 24-12
1⅜" Clear spacing. Use within the roadbed on highways where bicycles and pedestrians are excluded.

RECTANGULAR GRATE DETAILS
(See table below)

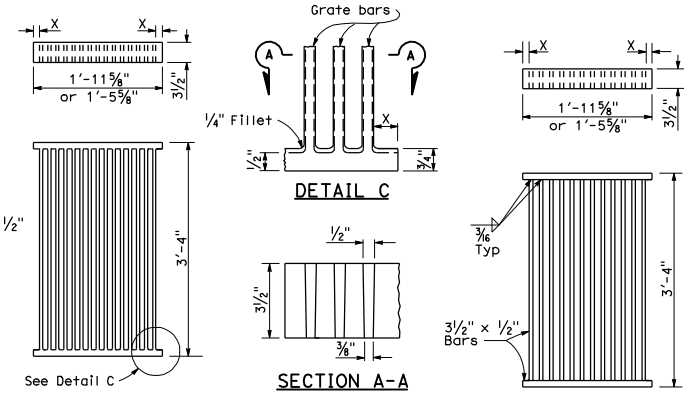

DETAIL C

SECTION A-A

ALTERNATIVE CAST NODULAR IRON GRATE OR CAST STEEL GRATE

ALTERNATIVE WELDED GRATE

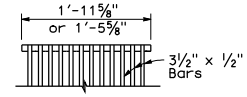

CAST END BLOCK

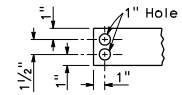

END OF BAR

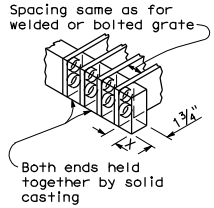

ALTERNATIVE CAST NODULAR IRON OR CAST STEEL END BLOCK GRATE

NOTES:

1. Grate type numbers refer to approximate width of grate in inches and number of bars, respectively.
2. Contractor has the option of using cast nodular iron, cast steel, welded, bolted, or cast end block grate.
3. See Special Provisions for requirements pertaining to galvanizing or asphalt dipping of grates and frames.
4. Rounded top of bars optional on all grates.
5. Pipe inlets with a grate shall be placed so that bars parallel direction of principle surface flow.
6. Full penetration butt welds may be substituted for the fillet welds on all anchors.
7. Standard square, hexagon, round or equivalent headed anchors may be substituted for the right angle hooks on the anchors shown on this plan.
8. Grate and frame weights are based on welded grates (weights of face angles, steps, protection bars, etc. are not included).

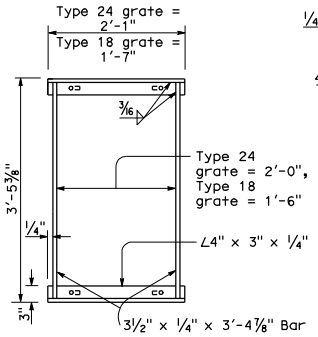

TYPICAL FRAME

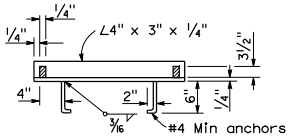

CROSS SECTION
(Thru frame)

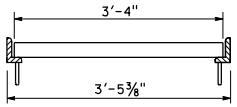

LONGITUDINAL SECTION
(Thru frame and grate)

RECTANGULAR FRAME DETAILS
(For all rectangular grates)

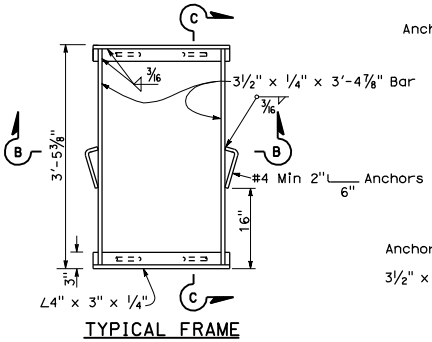

TYPICAL FRAME

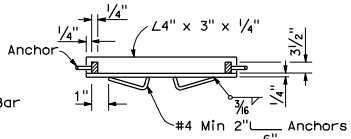

SECTION B-B

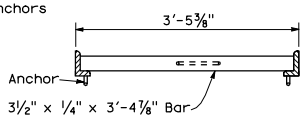

SECTION C-C

ALTERNATIVE ANCHOR FOR RECTANGULAR FRAME
(For details not shown, See Rectangular Frame Details)

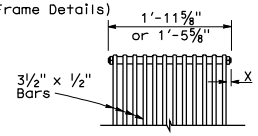

BOLTED END BLOCK

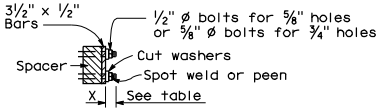

BOLTING DETAIL

ALTERNATIVE BOLTED GRATE

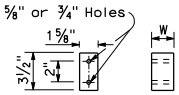

BAR SPACER

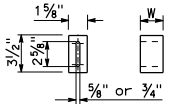

ALTERNATIVE SPACER
W = 1⅜" or 2"

GRATE BAR SPACING TABLE

TYPE	No. OF BARS	CLEAR BAR SPACING	X
18-9	9	1⅜"	1 1/16"
24-9	9	2"	1 9/16"
24-12	12	1⅜"	1¼"

INLET TYPE	COVER TYPE	WEIGHT LB
OS	PLATE	174
OL-7	PLATE	170
OL-10	PLATE	170
OL-14	PLATE	170
OL-21	PLATE	170
OCP	PLATE	112
OCPI	PLATE	112
OCPI	REDWOOD	42
OMP	PLATE	177
OMPI	PLATE	177

INLET TYPE	GRATE TYPE	No. OF GRATES	WEIGHT LB
GDO	24-12	2	634
GOL-7	24-12	1	326
GOL-10	24-12	1	326
GO,G1,G2,G3,G4 (TYPE 24)	24-9	1	263
	24-12	1	326
G4 (TYPE 18),G5,G6	18-9	1	249
GT1	18-9	2	498
GT2	18-9	2	498
GT3	24-12	2	652
GT4	24-12	2	652
TRASH RACK			22

BASIS FOR MISC IRON & STEEL FINAL PAY WEIGHTS FOR DRAINAGE INLETS
(See General Notes, No 8)

DIST	COUNTY	ROUTE	POST MILES TOTAL PROJECT	SHEET NO.	TOTAL SHEETS

REGISTERED CIVIL ENGINEER

January 18, 2008
PLANS APPROVAL DATE

The State of California or its officers or agents shall not be responsible for the accuracy or completeness of electronic copies of this plan sheet.

REGISTERED PROFESSIONAL ENGINEER Raymond Dan Tarlton No. C37332 Exp. 6-30-08 CIVIL STATE OF CALIFORNIA

To accompany plans dated _____

STATE OF CALIFORNIA
DEPARTMENT OF TRANSPORTATION

GRATE DETAILS

NO SCALE

RSP D77A DATED JANUARY 18, 2008 SUPERSEDES STANDARD PLAN D77A
DATED MAY 1, 2006 - PAGE 155 OF THE STANDARD PLANS BOOK DATED MAY 2006.

REVISED STANDARD PLAN RSP D77A

2006 REVISED STANDARD PLAN RSP D77A

DIST	COUNTY	ROUTE	POST MILES TOTAL PROJECT	SHEET NO.	TOTAL SHEETS

REGISTERED CIVIL ENGINEER

January 18, 2008
PLANS APPROVAL DATE

The State of California or its officers or agents shall not be responsible for the accuracy or completeness of electronic copies of this plan sheet.

REGISTERED PROFESSIONAL ENGINEER Stanley P. Johnson No. C57793 Exp. 03-31-08 CIVIL STATE OF CALIFORNIA

To accompany plans dated _____

LUMINAIRE ARM DATA

PROJECTED LENGTH	THICKNESS	MINIMUM OD @ POLE	MOUNTING HEIGHT
* 6'-0"	0.1196"	3¼"	36'-9"±
8'-0"		3½"	37'-3"±
10'-0"		3¾"	38'-0"±
12'-0"		3¾"	39'-0"±
15'-0"		4¼"	39'-6"±
** 20'-0"	0.1793"	5"	37'-0"±

* Type 30 - arm length 6'-0" - 15'-0" maximum
** Type 31 - arm lengths 20'-0"

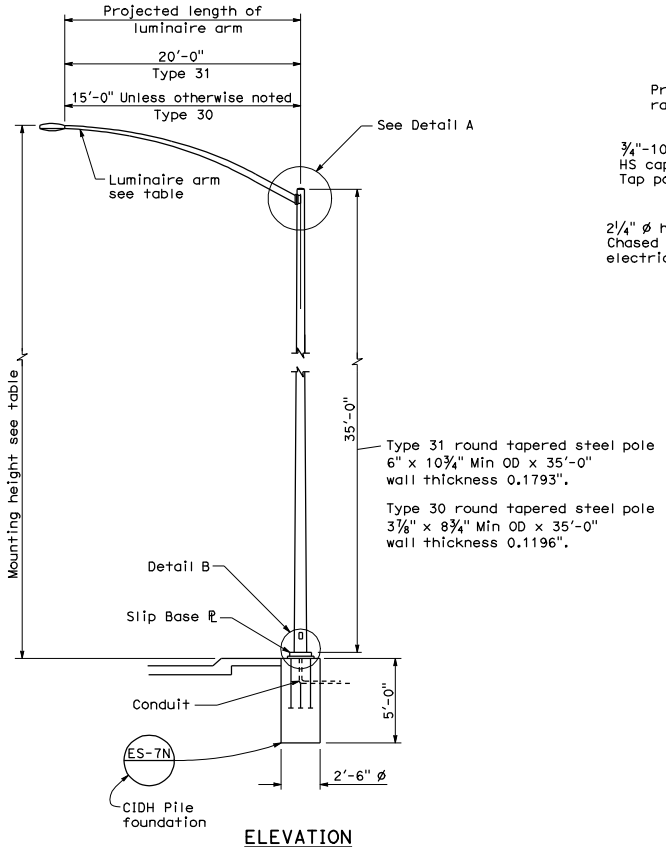

ELEVATION

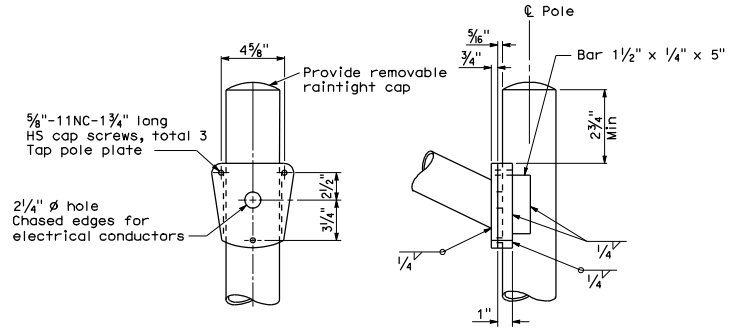

DETAIL A - TYPE 30

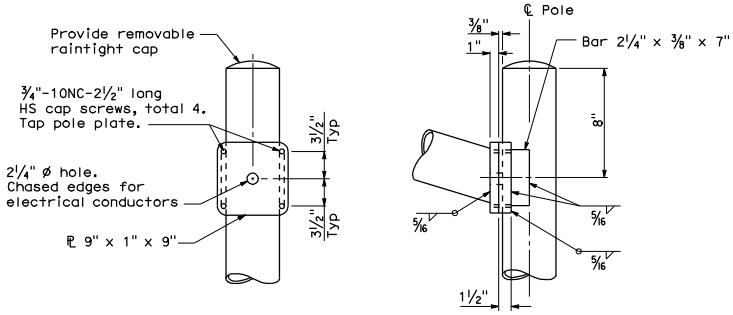

DETAIL A - TYPE 31

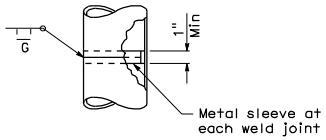

POLE SPLICE

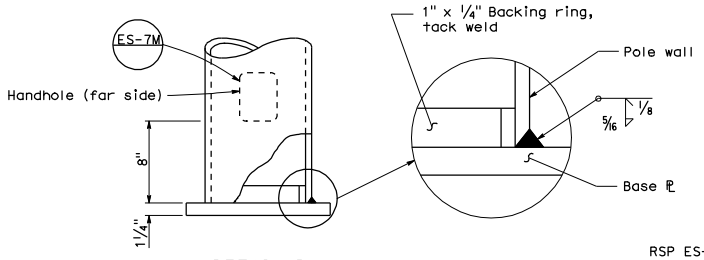

DETAIL B

NOTES:

1. Sheet steel shall have a minimum yield of 48,000 psi.
2. For slip base details see Standard Plan ES-6F.
3. For Type 30 fixed base use Type 15 base plate, and foundation shown on Revised Standard Plan RSP ES-6A. Use 1¼" Dia x 3'-6" x 4" anchor bolts.
4. For Type 31 fixed base use Type 32 base plate, anchor bolts and foundation on Standard Plan ES-6G.
5. Handhole shall be located on downstream side of traffic unless noted otherwise on plans.
6. For additional general notes refer to Standard Plan ES-7M.

STATE OF CALIFORNIA
DEPARTMENT OF TRANSPORTATION

ELECTRICAL SYSTEMS (LIGHTING STANDARD TYPES 30 AND 31)

NO SCALE

RSP ES-6E DATED JANUARY 18, 2008 SUPERCEDES STANDARD PLAN ES-6E DATED MAY 1, 2006 - PAGE 430 OF THE STANDARD PLANS BOOK DATED MAY 2006.

REVISED STANDARD PLAN RSP ES-6E

2006 REVISED STANDARD PLAN RSP ES-6E

11-19-07