DIST	COUNTY	ROUTE	KILOMETER POST TOTAL PROJECT	SHEET NO.	TOTAL SHEETS

Caltrans Metric

REGISTERED CIVIL ENGINEER

November 17, 2006
PLANS APPROVAL DATE

REGISTERED PROFESSIONAL ENGINEER Michael Janzen No. 44788 Exp. 03-31-08 CIVIL STATE OF CALIFORNIA

The State of California or its officers or agents shall not be responsible for the accuracy or completeness of electronic copies of this plan sheet.

To get to the Caltrans web site, go to: http://www.dot.ca.gov

To accompany plans dated _____

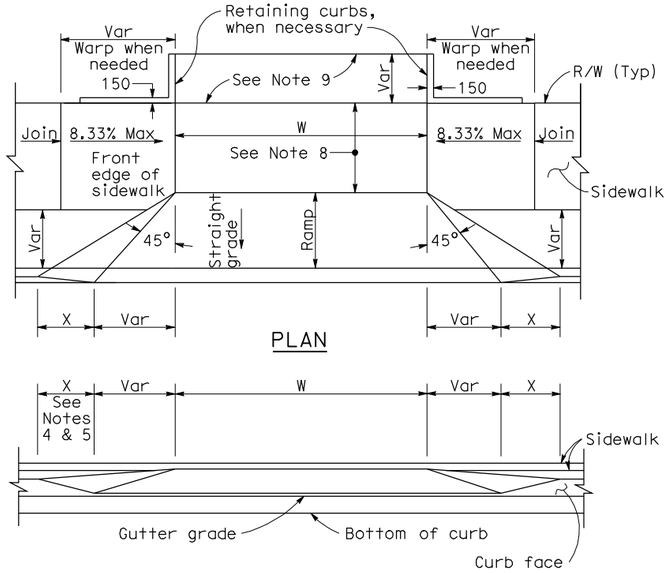

PLAN

ELEVATION

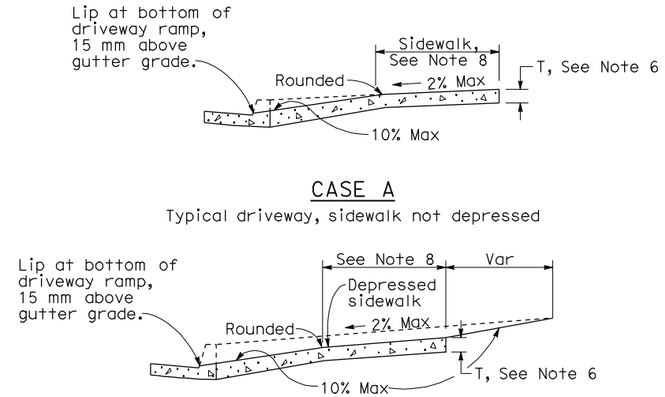

CASE A
Typical driveway, sidewalk not depressed

CASE B
Driveway with depressed sidewalk

SECTIONS

CURB QUANTITIES

TYPE	CUBIC METERS PER METER
A1-150	0.064
A1-200	0.075
A2-150	0.144
A2-200	0.155
A3-150	0.025
A3-200	0.035
B1-100	0.056
B1-150	0.073
B2-100	0.137
B2-150	0.152
B3-100	0.017
B3-150	0.027
B4	0.142
D-100	0.100
D-150	0.162
E	0.161

TABLE A

CURB TYPE	DIMENSIONS "H1"	"H2"	"W1"	"W2"
A1-150	350	150	190	40
A1-200	400	200	200	50
A2-150	300	150	790	40
A2-200	350	200	800	50
A3-150	150	130	185	35
A3-200	200	180	198	48
B1-100	300	100	200	70
B1-150	350	150	230	100
B2-100	250	100	800	70
B2-150	300	150	830	100
B3-100	100	80	185	55
B3-150	150	130	217	87
D-100	250	100	452	322
D-150	300	150	652	522

DRIVEWAYS

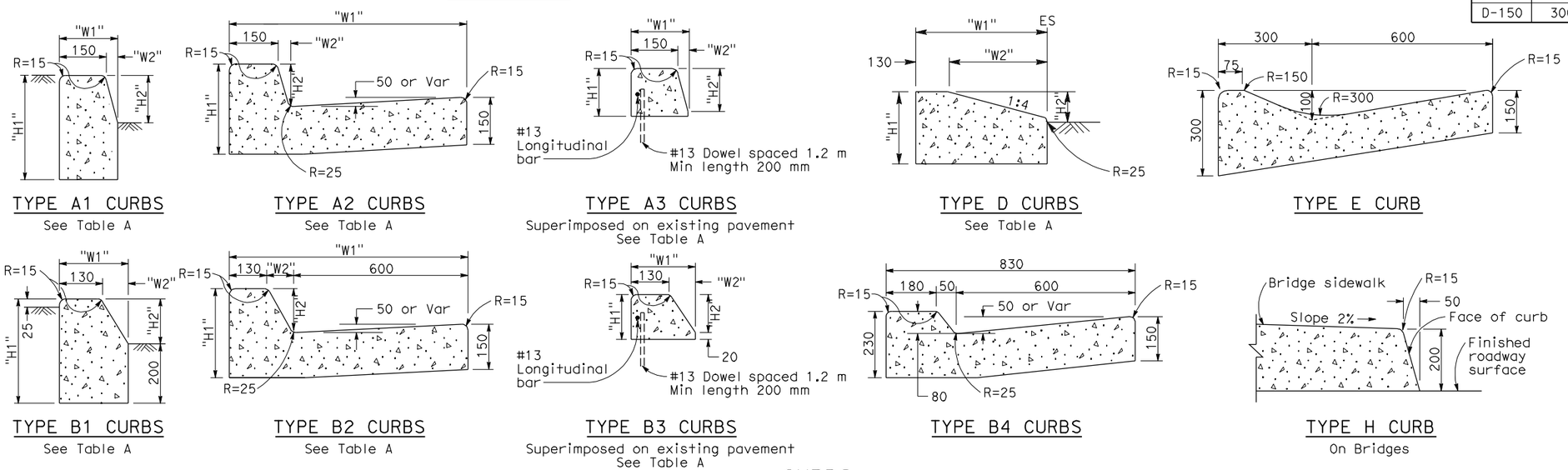

TYPE A1 CURBS
See Table A

TYPE A2 CURBS
See Table A

TYPE A3 CURBS
Superimposed on existing pavement
See Table A

TYPE D CURBS
See Table A

TYPE E CURB

TYPE B1 CURBS
See Table A

TYPE B2 CURBS
See Table A

TYPE B3 CURBS
Superimposed on existing pavement
See Table A

TYPE B4 CURBS

TYPE H CURB
On Bridges

CURBS

NOTES

1. Case A driveway section typically applies.
2. Use Case B driveway section when ramp slopes would exceed 10% in Case A.
3. Use Case B driveway section when sidewalk cross slope would exceed 2% in Case A.
4. X=900 mm except for curb heights over 250 mm where 1:4 slopes shall be used on curb slope.
5. X is a variable when sidewalk is located where wheelchairs may traverse the surface. Slopes shall not exceed 8.33%.
6. Sidewalk and ramp thickness ``T'' at driveway shall be 100 mm for residental and 150 mm for commercial.
7. Difference in slope of the driveway ramp and the slope of a line between the gutter and a point on the roadway 1.5 meters from gutter line shall not exceed 15%. Reduce driveway ramp slope, not gutter slope, where required.
8. Minimum width of clear passageway for sidewalk shall be 1.22 meters.
9. Retaining curbs and acquisition of construction easement may be necessary for narrow sidewalks or curb heights in excess of 150 mm.
10. Across the pedestrian route at curb ramp locations, the gutter pan slope shall not exceed 25 mm of depth for each 600 mm of width.

STATE OF CALIFORNIA
DEPARTMENT OF TRANSPORTATION

CURBS AND DRIVEWAYS

NO SCALE

ALL DIMENSIONS ARE IN MILLIMETERS UNLESS OTHERWISE SHOWN

RSP A87A DATED NOVEMBER 17, 2006 SUPERSEDES STANDARD PLAN A87A DATED JULY 1, 2004-PAGE 115 OF THE STANDARD PLANS BOOK DATED JULY 2004.

REVISED STANDARD PLAN RSP A87A

2004 REVISED Std PLAN RSP A87A

10-25-06