STANDARD PLANS

STATE OF CALIFORNIA
BUSINESS, TRANSPORTATION AND HOUSING AGENCY
DEPARTMENT OF TRANSPORTATION

JULY, 2004

ISSUED BY
CALIFORNIA DEPARTMENT
OF TRANSPORTATION

Copies of this book may be obtained from

STATE OF CALIFORNIA
DEPARTMENT OF TRANSPORTATION
PUBLICATIONS DISTRIBUTION UNIT
1900 ROYAL OAKS DRIVE
SACRAMENTO, CALIFORNIA 95815-3800
Telephone (916) 445-3520
Fax (916) 324-8997
Publications Unit Website: http://caltrans-opac.ca.gov/publicat.htm

Editors JOHN GIZINOS
SANTO WONG
ELAINE TSENG
Division of Engineering
Services - Office Engineer

FOREWORD

This July 2004 edition of the California Department of Transportation Standard Plans is the fourth edition of the Department's Standard Plans based on metric values using the International System of Units (SI).

Symbols for (SI) metric units used in this July 2004 edition of the Standard Plans are shown on the included Standard Plan A10B, "Acronyms and Abbreviation".

The July 2004 edition of the Standard Plans is supported by the July 1999 edition of the California Department of Transportation Standard Specifications.

Caltrans Metric

TABLE OF CONTENTS

PLAN TITLE	PLAN No.	PAGE
GENERAL ROAD WORK (Miscellaneous)		
ACRONYMS AND ABBREVIATIONS (A - L)	A10A	1
ACRONYMS AND ABBREVIATIONS (M - Z)	A10B	2
SYMBOLS (SHEET 1 OF 2)	A10C	3
SYMBOLS (SHEET 2 OF 2)	A10D	4
PAVEMENT MARKERS AND TRAFFIC LINES, TYPICAL DETAILS	A20A	5
PAVEMENT MARKERS AND TRAFFIC LINES, TYPICAL DETAILS	A20B	6
PAVEMENT MARKERS AND TRAFFIC LINES, TYPICAL DETAILS	A20C	7
PAVEMENT MARKERS AND TRAFFIC LINES, TYPICAL DETAILS	A20D	8
PAVEMENT MARKINGS - ARROWS	A24A	9
PAVEMENT MARKINGS - ARROWS	A24B	10
PAVEMENT MARKINGS - SYMBOLS AND NUMERALS	A24C	11
PAVEMENT MARKINGS - WORDS	A24D	12
PAVEMENT MARKINGS - WORDS AND CROSSWALKS	A24E	13
SHOULDER RUMBLE STRIP DETAILS - ROLLED-IN INDENTATIONS	A40A	14
SHOULDER RUMBLE STRIP DETAILS - GROUND-IN INDENTATIONS	A40B	15
EXCAVATION AND BACKFILL - MISCELLANEOUS DETAILS	A62A	16
LIMITS OF PAYMENT FOR EXCAVATION AND BACKFILL - BRIDGE SURCHARGE AND WALL	A62B	17
LIMITS OF PAYMENT FOR EXCAVATION AND BACKFILL - BRIDGE	A62C	18
EXCAVATION AND BACKFILL - CONCRETE PIPE CULVERTS	A62D	19
EXCAVATION AND BACKFILL - CONCRETE PIPE CULVERTS	A62DA	20
EXCAVATION AND BACKFILL - CAST-IN-PLACE REINFORCED CONCRETE BOX AND ARCH CULVERTS	A62E	21
EXCAVATION AND BACKFILL - METAL AND PLASTICS CULVERTS	A62F	22
PORTABLE CONCRETE BARRIER (TYPE 60K)	A63A	23
PORTABLE CONCRETE BARRIER (TYPE 60K)	A63B	24
OBJECT MARKERS	A73A	25
MARKERS	A73B	26
DELINEATORS, CHANNELIZERS AND BARRICADES	A73C	27
SURVEY MONUMENTS	A74	28
CONCRETE BARRIER TYPE 60	A76A	29
CONCRETE BARRIER TYPE 60	A76B	30
CONCRETE BARRIER TYPE 60E	A76C	31
CONCRETE BARRIER TYPE 60G	A76D	32
CONCRETE BARRIER TYPE 60G	A76E	33
CONCRETE BARRIER TYPE 60GE	A76F	34
CONCRETE BARRIER TYPE 60S	A76G	35
CONCRETE BARRIER TYPE 60S	A76H	36
CONCRETE BARRIER TYPE 60SE	A76I	37
CONCRETE BARRIER TYPE – WILDLIFE PASSAGE WAY (TYPE S)	A76J	38
CONCRETE BARRIER TYPE - WILDLIFE PASSAGE WAY (TYPE M)	A76K	39
CONCRETE BARRIER TYPE - WILDLIFE PASSAGE WAY (TYPE L)	A76L	40
METAL BEAM GUARD RAILING - STANDARD RAILING SECTION (WOOD POST WITH WOOD BLOCK)	A77A1	41
METAL BEAM GUARD RAILING -STANDARD RAILING SECTION (STEEL POST WITH NOTCHED WOOD OR NOTCHED PLASTIC BLOCK)	A77A2	42

PLAN TITLE PLAN No. PAGE

GENERAL ROAD WORK (Miscellaneous) (Cont'd)

METAL BEAM GUARD RAILING - STANDARD HARDWARE A77B1 43
METAL BEAM GUARD RAILING -WOOD POST AND WOOD BLOCK DETAILS A77C1 44
METAL BEAM GUARD RAILING STEEL POST, NOTCHED WOOD BLOCK AND NOTCHED PLASTIC BLOCK DETAILS A77C2 45
METAL BEAM GUARD RAILING - TYPICAL LINE POST EMBEDMENT AND HINGE POINT OFFSET DETAILS A77C3 46
METAL BEAM GUARD RAILING - TYPICAL RAILING DELINEATION AND DIKE POSITIONING DETAILS A77C4 47
METAL BEAM GUARD RAILING AT STRUCTURES, FIXED OBJECTS AND EMBANKMENTS (PLACEMENT DIAGRAMS) A77D1 48
METAL BEAM GUARD RAILING AND THRIE BEAM BARRIER RAILING AT STRUCTURES (PLACEMENT DIAGRAMS) A77D2 49
METAL BEAM GUARD RAILING - TYPICAL LAYOUTS FOR EMBANKMENTS A77E1 50
METAL BEAM GUARD RAILING - TYPICAL LAYOUTS FOR EMBANKMENTS A77E2 51
METAL BEAM GUARD RAILING - TYPICAL LAYOUTS FOR EMBANKMENTS A77E3 52
METAL BEAM GUARD RAILING - TYPICAL LAYOUTS FOR EMBANKMENTS A77E4 53
METAL BEAM GUARD RAILING - TYPICAL LAYOUTS FOR EMBANKMENTS A77E5 54
METAL BEAM GUARD RAILING - TYPICAL LAYOUTS FOR EMBANKMENTS A77E6 55
METAL BEAM GUARD RAILING - TYPICAL LAYOUTS FOR STRUCTURE APPROACH A77F1 56
METAL BEAM GUARD RAILING - TYPICAL LAYOUTS FOR STRUCTURE APPROACH AND BETWEEN STRUCTURES A77F2 57
METAL BEAM GUARD RAILING - TYPICAL LAYOUTS FOR STRUCTURE APPROACH A77F3 58
METAL BEAM GUARD RAILING - TYPICAL LAYOUTS FOR STRUCTURE DEPARTURE A77F4 59
METAL BEAM GUARD RAILING - TYPICAL LAYOUTS FOR STRUCTURE DEPARTURE A77F5 60
METAL BEAM GUARD RAILING - TYPICAL LAYOUTS FOR FIXED OBJECTS BETWEEN SEPARATE ROADBEDS (TWO-WAY TRAFFIC) A77G1 61
METAL BEAM GUARD RAILING - TYPICAL LAYOUTS FOR FIXED OBJECTS BETWEEN SEPARATE ROADBEDS (ONE-WAY TRAFFIC) A77G2 62
METAL BEAM GUARD RAILING - TYPICAL LAYOUTS FOR ROADSIDE FIXED OBJECTS A77G3 63
METAL BEAM GUARD RAILING - TYPICAL LAYOUTS FOR ROADSIDE FIXED OBJECTS A77G4 64
METAL BEAM GUARD RAILING - TYPICAL LAYOUTS FOR ROADSIDE FIXED OBJECTS A77G5 65

PLAN TITLE PLAN No. PAGE

GENERAL ROAD WORK (Miscellaneous) (Cont'd)

METAL BEAM GUARD RAILING - TYPICAL LAYOUTS FOR ROADSIDE FIXED OBJECTS A77G6 66
METAL BEAM GUARD RAILING - TYPICAL LAYOUTS FOR ROADSIDE FIXED OBJECTS A77G7 67
METAL BEAM GUARD RAILING - TYPICAL LAYOUTS FOR ROADSIDE FIXED OBJECTS A77G8 68
METAL RAILING END ANCHOR ASSEMBLY (TYPE SFT) A77H1 69
METAL RAILING RAIL TENSIONING ASSEMBLY A77H2 70
METAL RAILING ANCHOR CABLE AND ANCHOR PLATE DETAILS A77H3 71
METAL RAILING END ANCHOR ASSEMBLY (TYPE CA) A77I1 72
METAL BEAM GUARD RAILING - BURIED POST END ANCHOR A77I2 73
METAL BEAM GUARD RAILING CONNECTIONS TO BRIDGE RAILINGS WITHOUT SIDEWALKS DETAILS No. 1 ..... A77J1 74
METAL BEAM GUARD RAILING CONNECTIONS TO BRIDGE RAILINGS WITHOUT SIDEWALKS DETAILS No. 2 ..... A77J2 75
METAL BEAM GUARD RAILING CONNECTIONS TO ABUTMENTS AND WALLS A77J3 76
METAL BEAM GUARD RAILING TRANSITION RAILING (TYPE WB) A77J4 77
METAL BEAM GUARD RAILING CONNECTIONS TO BRIDGE RAILINGS WITH SIDEWALKS DETAILS No. 1 ..... A77K1 78
METAL BEAM GUARD RAILING CONNECTIONS TO BRIDGE RAILINGS WITH SIDEWALKS DETAILS No. 2 ..... A77K2 79
METAL BEAM RAILING TERMINAL SYSTEM (TYPE SRT) A77L1 80
METAL BEAM RAILING TERMINAL SYSTEM (TYPE SKT) A77L2 81
METAL BEAM RAILING TERMINAL SYSTEM (TYPE ET) A77L3 82
METAL BEAM RAILING TERMINAL SYSTEM (TYPE CAT) A77L4 83
METAL BEAM RAILING TERMINAL SYSTEM (TYPE FLEAT) A77L5 84
THRIE BEAM BARRIER STANDARD BARRIER RAILING SECTION (WOOD POST WITH WOOD BLOCK) A78A 85
THRIE BEAM BARRIER - STANDARD BARRIER RAILING SECTION (STEEL POST WITH NOTCHED WOOD BLOCK OR NOTCHED PLASTIC BLOCK) A78B 86
THRIE BEAM BARRIER - STANDARD HARDWARE DETAILS A78C1 87
THRIE BEAM BARRIER POST AND BLOCK DETAILS A78C2 88
THRIE BEAM BARRIER AT FIXED OBJECTS IN MEDIAN A78D1 89
DOUBLE THRIE BEAM BARRIER ON BRIDGE A78D2 90
SINGLE THRIE BEAM BARRIER - END ANCHOR ASSEMBLY AND TERMINAL SYSTEM END TREATMENT A78E1 91
DOUBLE THRIE BEAM BARRIER - EMERGENCY PASSAGEWAY AND END ANCHOR ASSEMBLY DETAILS A78E2 92
DOUBLE THRIE BEAM BARRIER - CRASH CUSHION END TREATMENT A78E3 93
DOUBLE THRIE BEAM BARRIER CONNECTION TO BRIDGE RAILINGS WITHOUT SIDEWALKS A78F1 94
SINGLE THRIE BEAM BARRIER CONNECTIONS TO BRIDGE RAILINGS WITHOUT SIDEWALKS A78F2 95
THRIE BEAM BARRIER CONNECTIONS TO ABUTMENTS AND WALLS A78G 96
THRIE BEAM BARRIER - TYPICAL LAYOUT FOR CONNECTION TO BRIDGE RAILING A78H 97

PLAN TITLE PLAN No. PAGE

GENERAL ROAD WORK (Miscellaneous) (Cont'd)

THRIE BEAM BARRIER CONNECTION TO CONCRETE BARRIER A78I 98
THRIE BEAM BARRIER TRANSITION RAILING (TYPE STB) A78J 99
THRIE BEAM BARRIER TRANSITION RAILING (TYPE DTB) A78K 100
CRASH CUSHION, SAND FILLED (UNIDIRECTIONAL) A81A 101
CRASH CUSHION, SAND FILLED (UNIDIRECTIONAL) A81B 102
CRASH CUSHION, SAND FILLED (BIDIRECTIONAL) A81C 103
CRASH CUSHION (TYPE CAT) A82A1 104
CRASH CUSHION (TYPE ADIEM) A82B1 105
CRASH CUSHION (TYPE REACT 9CBB) A82C1 106
CRASH CUSHION (TYPE REACT 9CBB) – BACKUP BLOCK DETAILS A82C2 107
CRASH CUSHION (TYPE REACT 9CBB) – CONCRETE BARRIER TRANSITION DETAILS A82C3 108
CRASH CUSHION (TYPE REACT 9SCBS) A82D1 109
CRASH CUSHION (TYPE REACT 9SCBS) – CONNECTION TO CONCRETE BARRIER A82D2 110
CRASH CUSHION (TYPE REACT 9SCBS) – ALIGNMENT OFFSET DETAILS A82D3 111
CRASH CUSHION (TYPE REACT 62B060) A82D4 112
CHAIN LINK FENCE A85 113
BARBED WIRE AND WIRE MESH FENCES A86 114
CURBS AND DRIVEWAYS A87A 115
ASPHALT CONCRETE DIKES A87B 116
CURB RAMP DETAILS A88A 117
CURB RAMP AND ISLAND PASSAGEWAY DETAILS A88B 118
ACCESSIBLE PARKING - OFF-STREET A90A 119
ACCESSIBLE PARKING - ON-STREET A90B 120

GENERAL ROAD WORK (Pavements)

JOINTED PLAIN CONCRETE PAVEMENT P1 121
JOINTED PLAIN CONCRETE PAVEMENT - WIDE PANEL DETAILS P2 122
UNDOWELED JOINTED PLAIN CONCRETE PAVEMENT P5 123
DOWEL BAR RETROFIT IN EXISTING CONCRETE PAVEMENT (LONGITUDINAL JOINTS COINCIDE WITH LANELINE PAVEMENT DELINEATION) P7 124
CONCRETE PAVEMENT - DOWEL BAR DETAILS P10 125
CONCRETE PAVEMENT - DOWEL BAR BASKET DETAILS P12 126
CONCRETE PAVEMENT TIE BAR BASKET DETAILS P17 127
CONCRETE PAVEMENT - LANE SCHEMATICS AND ISOLATION JOINT DETAIL P18 128
CONCRETE PAVEMENT - JOINT DETAILS P20 129
CONCRETE PAVEMENT - END PANEL PAVEMENT TRANSITIONS P30 130
CONCRETE PAVEMENT - RAMP GORE AREA PAVING DETAILS P35 131
CONCRETE PAVEMENT DRAINAGE INLET DETAILS No. 1 ..... P45 132
CONCRETE PAVEMENT DRAINAGE INLET DETAILS No. 2 ..... P46 133
ASPHALT CONCRETE PAVING (LONGITUDINAL TAPERED NOTCHED WEDGE JOINT) P70 134

PLAN TITLE PLAN No. PAGE

GENERAL ROAD WORK (Crib Walls)

REINFORCED CONCRETE CRIB WALL - BATTERED WALL - TYPES A, B AND C C7A 135
REINFORCED CONCRETE CRIB WALL - BATTERED WALL - TYPES D, E AND F C7B 136
REINFORCED CONCRETE CRIB WALL - VERTICAL WALL - TYPES A, B, AND C C7C 137
REINFORCED CONCRETE CRIB WALL - VERTICAL WALL - TYPES D, E AND F C7D 138
REINFORCED CONCRETE CRIB WALL - TYPES A, B, C, D, E AND F - HEADER AND STRETCHER DETAILS C7E 139
DESIGN DATA FOR REINFORCED CONCRETE CRIB WALL FOUNDATION PRESSURE-BATTERED WALL C7F 140
REINFORCED CONCRETE CRIB WALL FOUNDATION PRESSURE - VERTICAL WALL C7G 141
STEEL CRIB WALL CONSTRUCTION DETAILS C8A 142
STEEL CRIB WALL DESIGN DATA C8B 143
STEEL CRIB WALL DESIGN DATA C8C 144
TIMBER CRIB WALL - TYPES A, B, C AND D C9A 145
TIMBER CRIB WALL - TYPES A, B, C AND D - DESIGN DATA C9B 146

GENERAL ROAD WORK (Drainage)

DRAINAGE INLETS D72 147
DRAINAGE INLETS D73 148
DRAINAGE INLETS D74A 149
DRAINAGE INLETS D74B 150
DRAINAGE INLET DETAILS D74C 151
PIPE INLETS D75A 152
PIPE INLETS D75B 153
PIPE INLETS D75C 154
GRATE DETAILS D77A 155
BICYCLE PROOF GRATE DETAILS D77B 156
ALTERNATIVE HINGED COVER FOR TYPE OL AND OS INLETS AND TRASH RACK FOR TYPE OCP INLET D77C 157
GUTTER DEPRESSIONS D78A 158
INLET DEPRESSIONS - PORTLAND CEMENT CONCRETE SHOULDERS D78B 159
INLET DEPRESSIONS - ASPHALT CONCRETE SHOULDERS D78C 160
PRECAST REINFORCED CONCRETE PIPE - DIRECT DESIGN METHOD D79 161
CAST-IN-PLACE REINFORCED CONCRETE SINGLE BOX CULVERT D80 162
CAST-IN-PLACE REINFORCED CONCRETE DOUBLE BOX CULVERT D81 163
CAST-IN-PLACE REINFORCED CONCRETE BOX CULVERT MISCELLANEOUS DETAILS D82 164
BOX CULVERT WINGWALLS - TYPES A, B AND C D84 165
BOX CULVERT WINGWALLS - TYPES D AND E D85 166
BOX CULVERT WARPED WINGWALLS D86A 167
PIPE CULVERT HEADWALLS, ENDWALLS AND WARPED WINGWALLS D86B 168
ARCH CULVERT HEADWALLS, ENDWALLS AND WARPED WINGWALLS D86C 169
CORRUGATED METAL PIPE DOWNDRAIN DETAILS D87A 170

PLAN TITLE PLAN No. PAGE

GENERAL ROAD WORK (Drainage) (Cont'd)

PLASTIC PIPE DOWNDRAIN DETAILS D87B 171
CABLE ANCHORAGE SYSTEM D87C 172
OVERSIDE DRAINS D87D 173
CONSTRUCTION LOADS ON CULVERTS D88 174
STRUT DETAILS FOR STRUCTURAL STEEL PIPES, ARCHES AND VEHICULAR UNDERCROSSING D88A 175
PIPE HEADWALLS D89 176
PIPE CULVERT HEADWALLS, ENDWALLS AND WINGWALLS - TYPES A, B AND C D90 177
PIPE RISER CONNECTIONS D93A 178
DRAINAGE INLET RISER CONNECTIONS D93B 179
PIPE RISER WITH DEBRIS RACK CAGE D93C 180
METAL AND PLASTIC FLARED END SECTIONS D94A 181
CONCRETE FLARED END SECTIONS D94B 182
CORRUGATED METAL PIPE COUPLING DETAILS No. 1 - ANNULAR COUPLING BAND BAR AND STRAP AND ANGLE CONNECTIONS D97A 183
CORRUGATED METAL PIPE COUPLING DETAILS No. 2 - HAT BAND COUPLER AND FLANGE DETAILS D97B 184
CORRUGATED METAL PIPE COUPLING DETAILS No. 3 - HELICAL AND UNIVERSAL COUPLERS D97C 185
CORRUGATED METAL PIPE COUPLING DETAILS No. 4 - HUGGER COUPLING BANDS D97D 186
CORRUGATED METAL PIPE COUPLING DETAILS No. 5 - STANDARD JOINT D97E 187
CORRUGATED METAL PIPE COUPLING DETAILS No. 6 - POSITIVE JOINT D97F 188
CORRUGATED METAL PIPE COUPLING DETAILS No. 7 - POSITIVE JOINTS AND DOWNDRAIN D97G 189
REINFORCED CONCRETE PIPE OR NON - REINFORCED CONCRETE PIPE - STANDARD AND POSITIVE JOINTS D97H 190
SLOTTED CORRUGATED STEEL PIPE DRAIN DETAILS D98A 191
SLOTTED CORRUGATED STEEL PIPE DRAIN DETAILS D98B 192
GRATED LINE DRAIN DETAILS D98C 193
STRUCTURAL SECTION DRAINAGE SYSTEM DETAILS D99A 194
EDGE DRAIN OUTLET AND VENT DETAILS D99B 195
EDGE DRAIN CLEANOUT AND VENT DETAILS D99C 196
CROSS DRAIN INTERCEPTOR DETAILS D99D 197
GABION BASKET DETAILS No. 1 ..... D100A 198
GABION BASKET DETAILS No.2 ..... D100B 199
UNDERDRAINS D102 200

GENERAL ROAD WORK (Planting and Irrigation)

PLANTING AND IRRIGATION - ABBREVIATIONS H1 201
PLANTING AND IRRIGATION - SYMBOLS H2 202
PLANTING AND IRRIGATION DETAILS H3 203
PLANTING AND IRRIGATION DETAILS H4 204
PLANTING AND IRRIGATION DETAILS H5 205
PLANTING AND IRRIGATION DETAILS H6 206

PLAN TITLE PLAN No. PAGE

GENERAL ROAD WORK (Planting and Irrigation) (Cont'd)

PLANTING AND IRRIGATION DETAILS H7 207
PLANTING AND IRRIGATION DETAILS H8 208
PLANTING AND IRRIGATION DETAILS H9 209
IRRIGATION CONTROLLER ENCLOSURE CABINET H10 210

GENERAL ROAD WORK (Temporary Facilities)

TEMPORARY CRASH CUSHION, SAND FILLED (UNIDIRECTIONAL) T1A 211
TEMPORARY CRASH CUSHION, SAND FILLED (BIDIRECTIONAL) T1B 212
TEMPORARY CRASH CUSHION, SAND FILLED (SHOULDER INSTALLATIONS) T2 213
TEMPORARY RAILING (TYPE K) T3 214
TEMPORARY TRAFFIC SCREEN T4 215
TEMPORARY TERMINAL SECTION (TYPE K) T5 216
CONSTRUCTION PROJECT FUNDING IDENTIFICATION SIGNS T7 217
TRAFFIC CONTROL SYSTEM FOR LANE CLOSURE ON FREEWAYS AND EXPRESSWAYS T10 218
TRAFFIC CONTROL SYSTEM FOR LANE AND COMPLETE CLOSURES ON FREEWAYS AND EXPRESSWAYS T10A 219
TRAFFIC CONTROL SYSTEM FOR LANE CLOSURE ON MULTILANE CONVENTIONAL HIGHWAYS T11 220
TRAFFIC CONTROL SYSTEM FOR LANE CLOSURE ON MULTILANE CONVENTIONAL HIGHWAYS T12 221
TRAFFIC CONTROL SYSTEM FOR LANE CLOSURE ON TWO LANE CONVENTIONAL HIGHWAYS T13 222
TRAFFIC CONTROL SYSTEM FOR RAMP CLOSURE T14 223
TRAFFIC CONTROL SYSTEM FOR MOVING LANE CLOSURE ON MULTILANE HIGHWAYS T15 224
TRAFFIC CONTROL SYSTEM FOR MOVING LANE CLOSURE ON MULTILANE HIGHWAYS T16 225
TRAFFIC CONTROL SYSTEM FOR MOVING LANE CLOSURE ON TWO LANE HIGHWAYS T17 226
TEMPORARY WATER POLLUTION CONTROL DETAILS (TEMPORARY SILT FENCE) T51 227
TEMPORARY WATER POLLUTION CONTROL DETAILS (TEMPORARY STRAW BALE BARRIER) T52 228
TEMPORARY WATER POLLUTION CONTROL DETAILS (TEMPORARY COVER) T53 229
TEMPORARY WATER POLLUTION CONTROL DETAILS (TEMPORARY EROSION CONTROL BLANKET) T54 230
TEMPORARY WATER POLLUTION CONTROL DETAILS (TEMPORARY EROSION CONTROL BLANKET) T55 231
TEMPORARY WATER POLLUTION CONTROL DETAILS (TEMPORARY FIBER ROLL) T56 232
TEMPORARY WATER POLLUTION CONTROL DETAILS (TEMPORARY CHECK DAM) T57 233
TEMPORARY WATER POLLUTION CONTROL DETAILS (TEMPORARY CONSTRUCTION ENTRANCE) T58 234

PLAN TITLE PLAN No. PAGE

GENERAL ROAD WORK (Temporary Facilities) (Cont'd)

TEMPORARY WATER POLLUTION CONTROL DETAILS
(TEMPORARY CONCRETE WASHOUT FACILITY) T59 235

BRIDGE

BRIDGE DETAILS B0-1 236
BRIDGE DETAILS B0-3 237
BRIDGE DETAILS B0-5 238
BRIDGE DETAILS B0-13 239
400 mm AND 610 mm CAST-IN-DRILLED-HOLE CONCRETE PILE B2-3 240
PILE DETAILS-CLASS 400 AND CLASS 625 ..... B2-5 241
PILE DETAILS-CLASS 900 ..... B2-8 242
LOAD TEST PILE DETAILS (1) B2-9 243
LOAD TEST PILE DETAILS (2) B2-10 244
LOAD TEST PILE DETAILS (3) B2-11 245
RETAINING WALL TYPE 1 - H=1200 THROUGH 9100 mm B3-1 246
RETAINING WALL TYPE 1 - H=9700 THROUGH 10 900 mm B3-2 247
RETAINING WALL TYPE 1A B3-3 248
RETAINING WALL TYPE 2 ..... B3-4 249
COUNTERFORT RETAINING WALL TYPE 3 ..... B3-5 250
COUNTERFORT RETAINING WALL TYPE 4 ..... B3-6 251
RETAINING WALL TYPE 5 ..... B3-7 252
RETAINING WALL DETAILS No. 1 ..... B3-8 253
RETAINING WALL DETAILS No. 2 ..... B3-9 254
RETAINING WALL TYPE 6 - 1829 mm MAXIMUM B3-11 255
T-BEAM DETAILS B6-1 256
UTILITY OPENINGS, T-BEAM B6-10 257
JOINT SEALS (MAXIMUM MOVEMENT RATING = 50 mm) B6-21 258
BOX GIRDER DETAILS B7-1 259
DECK DRAINS B7-5 260
DECK DRAINS - TYPES D-1 AND D-2 ..... B7-6 261
DECK DRAIN - TYPE D-3 ..... B7-7 262
DECK DRAINAGE DETAILS B7-8 263
UTILITY OPENING – BOX GIRDER B7-10 264
UTILITY DETAILS B7-11 265
CAST-IN-PLACE PRESTRESSED GIRDER DETAILS B8-5 266
CHAIN LINK RAILING B11-7 267
CABLE RAILING B11-47 268
TUBULAR HAND RAILING B11-51 269
CHAIN LINK RAILING TYPE 7 ..... B11-52 270
CONCRETE BARRIER TYPE 25 ..... B11-53 271
CONCRETE BARRIER TYPE 26 ..... B11-54 272
CONCRETE BARRIER TYPE 732 ..... B11-55 273
CONCRETE BARRIER TYPE 736 ..... B11-56 274
CONCRETE BARRIER TYPE 742 ..... B11-57 275
CONCRETE BARRIER TYPE 80 (SHEET 1 OF 2) B11-60 276
CONCRETE BARRIER TYPE 80 (SHEET 2 OF 2) B11-61 277
CONCRETE BARRIER TYPE 80SW (SHEET 1 OF 3) B11-62 278

PLAN TITLE PLAN No. PAGE

BRIDGE (Cont'd)

CONCRETE BARRIER TYPE 80SW (SHEET 2 OF 3) B11-63 279
CONCRETE BARRIER TYPE 80SW (SHEET 3 OF 3) B11-64 280
CALIFORNIA ST-30 BRIDGE RAIL B11-65 281
CALIFORNIA ST-40 BRIDGE RAIL (SHEET 1 OF 2) B11-66 282
CALIFORNIA ST-40 BRIDGE RAIL (SHEET 2 OF 2) B11-67 283
CALIFORNIA ST-10 BRIDGE RAIL (SHEET 1 OF 3) B11-68 284
CALIFORNIA ST-10 BRIDGE RAIL (SHEET 2 OF 3) B11-69 285
CALIFORNIA ST-10 BRIDGE RAIL (SHEET 3 OF 3) B11-70 286
STRUCTURAL STEEL PLATE VEHICULAR UNDERCROSSING B14-1 287
COMMUNICATION AND SPRINKLER CONTROL CONDUITS
(CONDUIT LESS THAN SIZE 103) B14-3 288
WATER SUPPLY LINE (BRIDGE) (PIPE SIZES LESS THAN NPS 4) B14-4 289
WATER SUPPLY LINE (DETAILS) (PIPE SIZES LESS THAN NPS 4) B14-5 290
SOUNDWALL MASONRY BLOCK ON FOOTING DETAIL (1) B15-1 291
SOUNDWALL MASONRY BLOCK ON FOOTING DETAIL (2) B15-2 292
SOUNDWALL MASONRY BLOCK ON PILE CAP DETAIL (1) B15-3 293
SOUNDWALL MASONRY BLOCK ON PILE CAP DETAIL (2) B15-4 294
SOUNDWALL MASONRY BLOCK ON PILE CAP DETAIL (3) B15-5 295
SOUNDWALL MASONRY BLOCK ON TYPE 736S/SV BARRIER DETAILS (1) B15-6 296
SOUNDWALL MASONRY BLOCK ON TYPE 736S/SV BARRIER DETAILS (2) B15-7 297
SOUNDWALL MASONRY BLOCK ON TYPE 736S/SV BARRIER DETAILS (3) B15-8 298
SOUNDWALL MASONRY BLOCK MISCELLANEOUS DETAILS B15-9 299
SOUNDWALL MASONRY BLOCK ON FOOTING OR PILE CAP
1.524 m ACCESS GATE DETAIL (1) B15-10 300
SOUNDWALL MASONRY BLOCK ON FOOTING OR PILE CAP
1.524 m ACCESS GATE DETAILS (2) B15-11 301
SOUNDWALL MASONRY BLOCK ON BARRIER
1.524 m ACCESS GATE DETAILS (1) B15-12 302
SOUNDWALL MASONRY BLOCK ON BARRIER
1.524 m ACCESS GATE DETAILS (2) B15-13 303
SOUNDWALL MASONRY BLOCK ACCESS GATE LOCKING DETAILS B15-14 304
SOUNDWALL MASONRY BLOCK ON TYPE 736S/SV BARRIER
ON PILE FOOTING FOR SPANNING UTILITIES B15-15 305

ROADSIDE SIGNS

ROADSIDE SIGNS, TYPICAL INSTALLATION DETAILS No. 1 ..... RS1 306
ROADSIDE SIGNS - WOOD POST, TYPICAL INSTALLATION DETAILS No. 2 ..... RS2 307
ROADSIDE SIGNS - LAMINATED WOOD BOX POST
TYPICAL INSTALLATION DETAILS No. 3 ..... RS3 308
ROADSIDE SIGNS, TYPICAL INSTALLATION DETAILS No. 4 ..... RS4 309

OVERHEAD SIGNS

OVERHEAD SIGNS - TRUSS, INSTRUCTIONS AND EXAMPLES S1 310
OVERHEAD SIGNS - TRUSS, SINGLE POST TYPE - POST TYPES II THRU IX S2 311
OVERHEAD SIGNS - TRUSS, SINGLE POST TYPE – BASE PLATE AND
ANCHORAGE DETAILS S3 312

PLAN TITLE PLAN No. PAGE

OVERHEAD SIGNS (Cont'd)

OVERHEAD SIGNS - TRUSS, SINGLE POST TYPE - STRUCTURAL FRAME MEMBERS DETAILS No. 1 ..... S4 313
OVERHEAD SIGNS - TRUSS, SINGLE POST TYPE - STRUCTURAL FRAME MEMBERS DETAILS No. 2 ..... S5 314
OVERHEAD SIGNS - TRUSS, GUSSET PLATE DETAILS S6 315
OVERHEAD SIGNS - TRUSS, SINGLE POST TYPE - SQUARE PEDESTAL FOUNDATION S7 316
OVERHEAD SIGNS - TRUSS, SINGLE POST TYPE - ROUND PEDESTAL FOUNDATION S8 317
OVERHEAD SIGNS - TRUSS, TWO POST TYPE - POST TYPES I-S THRU VII-S S9 318
OVERHEAD SIGNS - TRUSS, TWO POST TYPE - BASE PLATE AND ANCHORAGE DETAILS S10 319
OVERHEAD SIGNS - TRUSS, TWO POST TYPE - STRUCTURAL FRAME MEMBERS S11 320
OVERHEAD SIGNS - TRUSS, STRUCTURAL FRAME DETAILS S12 321
OVERHEAD SIGNS - TRUSS, FRAME JUNCTURE DETAILS S13 322
OVERHEAD SIGNS - TRUSS, TWO POST TYPE - SQUARE PEDESTAL FOUNDATION S14 323
OVERHEAD SIGNS - TRUSS, TWO POST TYPE - ROUND PEDESTAL FOUNDATION S15 324
OVERHEAD SIGNS - WALKWAY DETAILS No. 1 ..... S16 325
OVERHEAD SIGNS - WALKWAY DETAILS No. 2 ..... S17 326
OVERHEAD SIGNS - WALKWAY SAFETY RAILING DETAILS S18 327
OVERHEAD SIGNS - TRUSS, SIGN MOUNTING DETAILS – LAMINATED PANEL – TYPE A S19 328
OVERHEAD SIGNS - STEEL FRAMES – REMOVABLE SIGN PANEL FRAMES S20 329
OVERHEAD SIGNS - REMOVABLE SIGN PANEL FRAMES MOUNTING DETAILS S21 330
OVERHEAD SIGNS - TRUSS, REMOVABLE SIGN PANEL FRAMES – 2794 mm AND 3048 mm SIGN PANELS S22 331
OVERHEAD SIGNS - TUBULAR, INSTRUCTIONS AND EXAMPLES S30 332
OVERHEAD SIGNS - TUBULAR, SINGLE POST TYPE - LAYOUT AND PIPE SELECTION S31 333
OVERHEAD SIGNS - TUBULAR, TWO POST TYPE - LAYOUT AND PIPE SELECTION S32 334
OVERHEAD SIGNS - TUBULAR, STRUCTURAL FRAME - DETAILS No. 1 ..... S33 335
OVERHEAD SIGNS - TUBULAR, STRUCTURAL FRAME - DETAILS No. 2 ..... S34 336
OVERHEAD SIGNS - TUBULAR, SINGLE AND TWO POST TYPE - BASE PLATE AND ANCHORAGE DETAILS S35 337
OVERHEAD SIGNS - TUBULAR, SINGLE POST AND TWO POST TYPE - SQUARE PEDESTAL PILE FOUNDATION S36 338
OVERHEAD SIGNS - TUBULAR, SINGLE POST AND TWO POST TYPE- ROUND PEDESTAL PILE FOUNDATION S37 339
OVERHEAD SIGNS - LIGHTWEIGHT BALANCED - SINGLE STEEL POST CONNECTION AND MOUNTING DETAILS S41 340
OVERHEAD SIGNS - LIGHTWEIGHT BALANCED - SINGLE STEEL POST DETAILS S42 341
OVERHEAD SIGNS - LIGHTWEIGHT, TYPE A, CONNECTION DETAILS S43 342

PLAN TITLE PLAN No. PAGE

OVERHEAD SIGNS (Cont'd)

OVERHEAD SIGNS - LIGHTWEIGHT, TYPE B, CONNECTION DETAILS S44 343
OVERHEAD SIGNS - LIGHTWEIGHT, TYPE C, CONNECTION DETAILS S45 344
OVERHEAD SIGNS - LIGHTWEIGHT, SIGN PANEL MOUNTING DETAILS,
LAMINATED PANEL - TYPE A S46 345
OVERHEAD SIGNS - LIGHTWEIGHT, LIGHT FIXTURE MOUNTING DETAILS S47 346
OVERHEAD SIGNS - LIGHTWEIGHT POST DETAILS S48 347
OVERHEAD SIGNS - LIGHTWEIGHT FOUNDATION DETAILS S49 348
OVERHEAD SIGNS - BOX BEAM CLOSED TRUSS, FOUNDATION DETAILS S60 349
OVERHEAD SIGNS - BOX BEAM CLOSED TRUSS,
TWO POST TYPE FRAME MEMBERS S61 350
OVERHEAD SIGNS - BOX BEAM CLOSED TRUSS,
SINGLE AND TWO POST TYPE GENERAL FRAME DETAILS S62 351
OVERHEAD SIGNS - BOX BEAM CLOSED TRUSS,
RIBBED SHEET METAL DETAILS S63 352
OVERHEAD SIGNS - BOX BEAM CLOSED TRUSS,
TWO POST TYPE , FRAME DETAILS S64 353
OVERHEAD SIGNS - BOX BEAM CLOSED TRUSS,
TWO POST TYPE, FRAME JUNCTURE DETAILS S65 354
OVERHEAD SIGNS - BOX BEAM CLOSED TRUSS,
TWO POST TYPE, POST DETAILS S66 355
OVERHEAD SIGNS - BOX BEAM CLOSED TRUSS
SINGLE POST TYPE, FRAME MEMBERS S67 356
OVERHEAD SIGNS - BOX BEAM CLOSED TRUSS,
SINGLE POST CANTILEVER, FRAME DETAILS S68 357
OVERHEAD SIGNS - BOX BEAM CLOSED TRUSS,
SINGLE POST CANTILEVER, FRAME JUNCTURE DETAILS S69 358
OVERHEAD SIGNS - BOX BEAM CLOSED TRUSS,
SINGLE POST CANTILEVER, POST DETAILS S70 359
OVERHEAD SIGNS - BOX BEAM CLOSED TRUSS,
SINGLE POST BUTTERFLY, FRAME DETAILS S71 360
OVERHEAD SIGNS - BOX BEAM CLOSED TRUSS,
SINGLE POST BUTTERFLY, FRAME JUNCTURE DETAILS S72 361
OVERHEAD SIGNS - BOX BEAM CLOSED TRUSS,
SINGLE POST BUTTERFLY, POST DETAILS S73 362
OVERHEAD LAMINATED SIGN - SINGLE OR MULTIPLE PANEL,
TYPE A (25.4 mm THICK) S81 363
ROADSIDE LAMINATED SIGN - SINGLE OR MULTIPLE PANEL,
TYPE B (25.4 mm THICK) S82 364
ROADSIDE LAMINATED SIGN - SINGLE OR MULTIPLE PANEL,
TYPE B (63.5 mm THICK) S83 365
ROADSIDE LAMINATED SIGN - SINGLE OR MULTIPLE PANEL,
TYPE H (63.5 mm THICK) S84 366
SEAM CLOSURE, "H" SECTION EXTRUSION AND POST SPACING TABLES,
MULTI-HORIZONTAL LAMINATED PANEL ALUMINUM SIGNS S85 367
LAMINATED PANEL DETAILS - EXTRUSIONS FOR TYPE A, B AND H PANELS S86 368
TYPE A-1 MOUNTING HARDWARE - OVERHEAD LAMINTED TYPE A PANEL,
TRUSS AND LIGHTWEIGHT SIGN STRUCTURES S87 369

PLAN TITLE PLAN No. PAGE

OVERHEAD SIGNS (Cont'd)

TYPE A-2 MOUNTING HARDWARE - OVERHEAD LAMINATED TYPE A PANEL, BOX BEAM CLOSED TRUSS, BRIDGE MOUNTED AND TUBUAR SIGN STRUCTURES S88 370
ROADSIDE FORMED SINGLE SHEET ALUMINUM PANEL S89 371
CHANNEL AND BOLT HOLE LOCATION, OVERHEAD FORMED SIGN PANEL S90 372
OVERHEAD FORMED SIGN PANEL, TYPE A-3 MOUNTING HARDWARE S91 373
OVERHEAD FORMED SIGN PANEL S92 374
FRAMING DETAILS FOR FRAMED SINGLE SHEET ALUMINUM SIGNS, RECTANGULAR SHAPE S93 375
ROADSIDE SINGLE SHEET ALUMINUM SIGNS, RECTANGULAR SHAPE S94 376
ROADSIDE SINGLE SHEET ALUMINUM SIGNS, DIAMOND SHAPE S95 377
OVERHEAD SIGN - TRUSS, SINGLE POST TYPE, LAYOUT UNBALANCED BUTTERFLY CHANGEABLE MESSAGE SIGNS, MODEL 500 ..... S101 378
OVERHEAD SIGN - TRUSS, SINGLE POST TYPE, STRUCTURAL FRAME DETAILS, UNBALANCED BUTTERFLY CHANGEABLE MESSAGE SIGNS, MODEL 500 ..... S102 379
OVERHEAD SIGN - TRUSS, SINGLE POST TYPE, PLAN AND UPPPER BOLT DETAILS, UNBALANCED BUTTERFLY CHANGEABLE MESSAGE SIGNS, MODEL 500 ..... S103 380
OVERHEAD SIGN - TRUSS, SINGLE POST TYPE, FRAME JUNCTURE DETAILS, UNBALANCE BUTTERFLY CHANGEABLE MESSAGE SIGNS, MODEL 500 ..... S104 381
OVERHEAD SIGN - TRUSS, SINGLE POST TYPE, LAYOUT, BALANCED BUTTERFLY CHANGEABLE MESSAGE SIGNS, MODEL 500 ..... S105 382
OVERHEAD SIGN - TRUSS, SINGLE POST TYPE, STRUCTURAL FRAME DETAILS, BALANCED BUTTERFLY CHANGEABLE MESSAGE SIGNS, MODEL 500 ..... S106 383
OVERHEAD SIGN - TRUSS, SINGLE POST TYPE, PLAN AND UPPER BOLT DETAILS, BALANCED BUTTERFLY CHANGEABLE MESSAGE SIGNS, MODEL 500 ..... S107 384
OVERHEAD SIGN - TRUSS, SINGLE POST TYPE, FRAME JUNCTURE DETAILS BALANCED BUTTERFLY CHANGEABLE MESSAGE SIGNS, MODEL 500 ..... S108 385
OVERHEAD SIGN - TRUSS, SINGLE POST TYPE LAYOUT, FULL CANTILEVER CHANGEABLE MESSAGE SIGNS, MODEL 500 ..... S109 386
OVERHEAD SIGN - TRUSS, SINGLE POST TYPE, STRUCTURAL FRAME DETAILS, FULL CANTILEVER CHANGEABLE MESSAGE SIGNS, MODEL 500 ..... S110 387
OVERHEAD SIGN - TRUSS, SINGLE POST TYPE, PLAN AND UPPER BOLT DETAILS, FULL CANTILEVER CHANGEABLE MESSAGE SIGNS, MODEL 500 ..... S111 388
OVERHEAD SIGN - TRUSS, SINGLE POST TYPE, FRAME JUNCTURE DETAILS, FULL CANTILEVER CHANGEABLE MESSAGE SIGNS, MODEL 500 ..... S112 389
OVERHEAD SIGN - TRUSS, SINGLE POST TYPE, MOUNTING DETAILS, CHANGEABLE MESSAGE SIGNS, MODEL 500 ..... S113 390
OVERHEAD SIGN - TRUSS, SINGLE POST TYPE, WALKWAY DETAILS, CHANGEABLE MESSAGE SIGNS, MODEL 500 ..... S114 391

PLAN TITLE PLAN No. PAGE

OVERHEAD SIGNS (Cont'd)

OVERHEAD SIGN - TRUSS, SINGLE POST TYPE, ANCHORAGE AND BASE PLATE DETAILS, CHANGEABLE MESSAGE SIGNS, MODEL 500 ..... S115 392
OVERHEAD SIGN - TRUSS, SINGLE POST TYPE, FOUNDATION AND MISCELLANEOUS DETAILS, CHANGEABLE MESSAGE SIGNS, MODEL 500 ..... S116 393
OVERHEAD SIGN - TRUSS, SINGLE POST TYPE, LAYOUT, UNBALANCED BUTTERFLY CHANGEABLE MESSAGE SIGNS, MODEL 510 ..... S120 394
OVERHEAD SIGN - TRUSS, SINGLE POST TYPE, STRUCTURAL FRAME DETAILS, UNBALANCED BUTTERFLY CHANGEABLE MESSAGE SIGNS, MODEL 510 ..... S121 395
OVERHEAD SIGN - TRUSS, SINGLE POST TYPE, PLAN AND UPPER BOLT DETAILS, UNBALANCED BUTTERFLY CHANGEABLE MESSAGE SIGNS, MODEL 510 ..... S122 396
OVERHEAD SIGN - TRUSS, SINGLE POST TYPE, FRAME JUNCTURE DETAILS UNBALANCED BUTTERFLY CHANGEABLE MESSAGE SIGNS, MODEL 510 ..... S123 397
OVERHEAD SIGN - TRUSS, SINGLE POST TYPE, LAYOUT, BALANCED BUTTERFLY CHANGEABLE MESSAGE SIGNS, MODEL 510 ..... S124 398
OVERHEAD SIGN - TRUSS, SINGLE POST TYPE, STRUCTURAL FRAME DETAILS, BALANCED BUTTERFLY CHANGEABLE MESSAGE SIGNS, MODEL 510 ..... S125 399
OVERHEAD SIGN - TRUSS, SINGLE POST TYPE, PLAN AND UPPER BOLT DETAILS, BALANCED BUTTERFLY CHANGEABLE MESSAGE SIGNS, MODEL 510 ..... S126 400
OVERHEAD SIGN - TRUSS, SINGLE POST TYPE, FRAME JUNCTURE DETAILS BALANCED BUTTERFLY CHANGEABLE MESSAGE SIGNS, MODEL 510 ..... S127 401
OVERHEAD SIGN - TRUSS, SINGLE POST TYPE, LAYOUT, FULL CANTILEVER CHANGEABLE MESSAGE SIGNS, MODEL 510 ..... S128 402
OVERHEAD SIGN - TRUSS, SINGLE POST TYPE, STRUCTURAL FRAME DETAILS, FULL CANTILEVER CHANGEABLE MESSAGE SIGNS, MODEL 510 ..... S129 403
OVERHEAD SIGN - TRUSS, SINGLE POST TYPE, PLAN AND UPPER BOLT DETAILS, FULL CANTILEVER CHANGEABLE MESSAGE SIGNS, MODEL 510 ..... S130 404
OVERHEAD SIGN - TRUSS, SINGLE POST TYPE, FRAME JUNCTURE DETAILS FULL CANTILEVER CHANGEABLE MESSAGE SIGNS, MODEL 510 ..... S131 405
OVERHEAD SIGN - TRUSS, SINGLE POST TYPE, MOUNTING DETAILS, CHANGEABLE MESSAGE SIGNS, MODEL 510 ..... S132 406
OVERHEAD SIGN - TRUSS, SINGLE POST TYPE, WALKWAY DETAILS, CHANGEABLE MESSAGE SIGNS, MODEL 510 ..... S133 407
OVERHEAD SIGN - TRUSS, SINGLE POST TYPE, ANCHORAGE AND BASE PLATE DETAILS, CHANGEABLE MESSAGE SIGNS, MODEL 510 ..... S134 408
OVERHEAD SIGN - TRUSS, SINGLE POST TYPE, FOUNDATION AND MISCELLANEOUS DETAILS, CHANGEABLE MESSAGE SIGNS, MODEL 510 ..... S135 409
OVERHEAD SIGN - TRUSS, SINGLE POST TYPE, WALKWAY SAFETY RAILING DETAILS, CHANGEABLE MESSAGE SIGNS, MODEL 500 AND 510 ..... S140 410

PLAN TITLE PLAN No. PAGE

OVERHEAD SIGNS (Cont'd)

OVERHEAD SIGN - TRUSS, SINGLE POST TYPE, SAFETY CABLE ANCHORAGE DETAILS, CHANGEABLE MESSAGE SIGNS, MODEL 500 AND 510 ..... S141 411
OVERHEAD SIGN - TRUSS, SINGLE POST TYPE, GUSSET PLATE DETAILS, CHANGEABLE MESSAGE SIGNS, MODEL 500 AND 510 ..... S142 412

SIGNALS, LIGHTING AND ELECTRICAL SYSTEMS

ELECTRICAL SYSTEMS (SYMBOLS AND ABBREVIATIONS) ES-1A 413
ELECTRICAL SYSTEMS (SYMBOLS AND ABBREVIATIONS) ES-1B 414
ELECTRICAL SYSTEMS (SYMBOLS AND ABBREVIATIONS) ES-1C 415
ELECTRICAL SYSTEMS (SERVICE EQUIPMENT) ES-2A 416
ELECTRICAL SYSTEMS (SERVICE EQUIPMENT, TYPE II SERIES) ES-2B 417
ELECTRICAL SYSTEMS (SERVICE EQUIPMENT NOTES, TYPE III SERIES) ES-2C 418
ELECTRICAL SYSTEMS (SERVICE EQUIPMENT AND TYPICAL WIRING DIAGRAM, TYPE III-A SERIES) ES-2D 419
ELECTRICAL SYSTEMS (SERVICE EQUIPMENT AND TYPICAL WIRING DIAGRAM, TYPE III-B SERIES) ES-2E 420
ELECTRICAL SYSTEMS (SERVICE EQUIPMENT AND TYPICAL WIRING DIAGRAM TYPE III-C SERIES) ES-2F 421
ELECTRICAL SYSTEMS (SERVICE EQUIPMENT AND TYPICAL WIRING DIAGRAM TYPE III-D SERIES) ES-2G 422
ELECTRICAL SYSTEMS (CONTROLLER CABINET DETAILS) ES-3A 423
ELECTRICAL SYSTEMS (CONTROLLER CABINET DETAILS) ES-3B 424
ELECTRICAL SYSTEMS (CONTROLLER CABINET DETAILS) ES-3C 425
ELECTRICAL SYSTEMS (TELEPHONE DEMARCATION CABINET, TYPE A) ES-3D 426
ELECTRICAL SYSTEMS (TELEPHONE DEMARCATION CABINET, TYPE B) ES-3E 427
ELECTRICAL SYSTEMS (TELEPHONE DEMARCATION CABINET, TYPE C) ES-3F 428
ELECTRICAL SYSTEMS (TELEPHONE DEMARCATION CABINET, TYPE C DETAILS) ES-3G 429
ELECTRICAL SYSTEMS (IRRIGATION CONTROLLER ENCLOSURE CABINET) ES-3H 430
ELECTRICAL SYSTEMS (SIGNAL HEADS AND MOUNTINGS) ES-4A 431
ELECTRICAL SYSTEMS (SIGNAL HEADS AND MOUNTINGS) ES-4B 432
ELECTRICAL SYSTEMS (SIGNAL HEADS AND MOUNTINGS) ES-4C 433
ELECTRICAL SYSTEMS (SIGNAL HEADS AND MOUNTINGS) ES-4D 434
ELECTRICAL SYSTEMS (SIGNAL FACES AND MOUNTINGS) ES-4E 435
ELECTRICAL SYSTEMS (DETECTORS) ES-5A 436
ELECTRICAL SYSTEMS (DETECTORS) ES-5B 437
ELECTRICAL SYSTEMS (DETECTORS) ES-5C 438
ELECTRICAL SYSTEMS (DETECTORS) ES-5D 439
ELECTRICAL SYSTEMS (LIGHTING STANDARDS TYPES 15 AND 21) ES-6A 440
ELECTRICAL SYSTEMS (LIGHTING STANDARDS TYPES 15 AND 21, BARRIER RAIL MOUNTED DETAILS) ES-6B 441
ELECTRICAL SYSTEMS (LIGHTING STANDARDS TYPE 15, SLIP BASE INSERT) ES-6C 442
ELECTRICAL SYSTEMS (LIGHTING STANDARDS TYPE S 15D AND 21D, DOUBLE ARM) ES-6D 443
ELECTRICAL SYSTEMS (LIGHTING STANDARDS TYPE 30 AND 31) ES-6E 444

PLAN TITLE PLAN No. PAGE

SIGNALS, LIGHTING AND ELECTRICAL SYSTEMS (Cont'd)

ELECTRICAL SYSTEMS (LIGHTING STANDARDS TYPE 30 AND 31, BASE PLATE DETAILS) ES-6F 445
ELECTRICAL SYSTEMS (LIGHTING STANDARDS TYPE 32) ES-6G 446
ELECTRICAL SYSTEMS (LIGHTING STANDARDS TYPES 35 AND 36-20A, 10 DEGREE TYPE) ES-6H 447
ELECTRICAL SYSTEMS (LIGHTING STANDARDS TYPE 35 AND 36-20A, 10 DEGREE TYPE DETAILS) ES-6I 448
ELECTRICAL SYSTEMS (LIGHTING STANDARDS - 24.4 m TO 48.8 m HIGH MAST LIGHT POLE FOUNDATION DETAILS) ES-6J 449
ELECTRICAL SYSTEMS (LIGHTING STANDARDS TYPE 5 AND TYPE 10 OVERHEAD SIGN MOUNTED) ES-6K 450
ELECTRICAL SYSTEMS (SIGNAL STANDARDS PUSH BUTTON POSTS AND TYPE 15TS STANDARD) ES-7A 451
ELECTRICAL SYSTEMS (SIGNAL AND LIGHTING STANDARDS - TYPE 1 STANDARDS AND EQUIPMENT NUMBERING) ES-7B 452
ELECTRICAL SYSTEMS (SIGNAL AND LIGHTING STANDARDS - CASE 1 ARM LOADING, WIND VELOCITY = 129 km/h, ARM LENGTHS 4.6 m TO 9.1 m) ES-7C 453
ELECTRICAL SYSTEMS (SIGNAL AND LIGHTING STANDARDS - CASE 2 ARM LOADING, WIND VELOCITY = 129 km/h, ARM LENGTHS 4.6 m TO 9.1 m) ES-7D 454
ELECTRICAL SYSTEMS (SIGNAL AND LIGHTING STANDARDS - CASE 3 ARM LOADING, WIND VELOCITY = 129 km/h, ARM LENGHTS 4.6 m TO 13.7 m) ES-7E 455
ELECTRICAL SYSTEMS (SIGNAL AND LIGHTING STANDARDS - CASE 4 ARM LOADING, WIND VELOCITY = 129 km/h, ARM LENGHTS 7.6 m TO 13.7 m) ES-7F 456
ELECTRICAL SYSTEMS (SIGNAL AND LIGHTING STANDARDS - CASE 5 ARM LOADING, WIND VELOCITY = 129 km/h, ARM LENGHTS 15.2 m TO 16.8 m) ES-7G 457
ELECTRICAL SYSTEMS (SIGNAL AND LIGHTING STANDARDS - CASE 5 ARM LOADING, WIND VELOCITY = 129 km/h, ARM LENGHTS 18.2 m TO 19.8 m) ES-7H 458
ELECTRICAL SYSTEMS (SIGNAL AND SIGN STANDARDS - TYPE 33, LEFT TURN) ES-7I 459
ELECTRICAL SYSTEMS (SIGNAL AND LIGHTING STANDARDS - ADVANCE FLASHING BEACONS) ES-7J 460
ELECTRICAL SYSTEMS (SIGNAL, LIGHTING AND ELECTRICAL SYSTEMS - CANTILEVER FLASHING BEACON, TYPE 9, 9A AND 9B) ES-7K 461
ELECTRICAL SYSTEMS (SIGNAL, LIGHTING AND ELECTRICAL SYSTEMS - CANTILEVER FLASHING BEACON, TYPES 9, 9A AND 9B ES-7L 462
ELECTRICAL SYSTEMS (SIGNAL AND LIGHTING STANDARDS - DETAILS No. 1) ES-7M 463
ELECTRICAL SYSTEMS (SIGNAL AND LIGHTING STANDARDS - DETAILS No. 2) ES-7N 464
ELECTRICAL SYSTEMS (SIGN ILLUMINATION - INTERNALLY ILLUMINATED STREET NAME SIGN) ES-7O 465
ELECTRICAL SYSTEMS (PEDESTRIAN BARRICADES) ES-7P 466

PLAN TITLE PLAN No. PAGE

SIGNALS, LIGHTING AND ELECTRICAL SYSTEMS (Cont'd)

ELECTRICAL SYSTEMS (PULL BOX DETAILS) ES-8 467
ELECTRICAL SYSTEMS (ELECTRICAL DETAILS, STRUCTURE INSTALLATIONS) ES-9A 468
ELECTRICAL SYSTEMS (ELECTRICAL DETAILS, STRUCTURE INSTALLATIONS) ES-9B 469
ELECTRICAL SYSTEMS (ELECTRICAL DETAILS, STRUCTURE INSTALLATIONS) ES-9C 470
ELECTRICAL SYSTEMS (ELECTRICAL DETAILS, STRUCTURE INSTALLATIONS) ES-9D 471
ELECTRICAL SYSTEMS (ELECTRICAL DETAILS, STRUCTURE INSTALLATIONS) ES-9E 472
ELECTRICAL SYSTEMS (FLUSH SOFFIT LUMINAIRE MODIFICATION DETAILS, STRUCTURE INSTALLATIONS) ES-9F 473
ELECTRICAL SYSTEMS (ISOLUX DIAGRAMS) ES-10 474
ELECTRICAL SYSTEMS (FOUNDATION INSTALLATIONS) ES-11 475
ELECTRICAL SYSTEMS (PEDESTRIAN OVERCROSSING FLUORESCENT LIGHTING FIXTURE) ES-12A 476
ELECTRICAL SYSTEMS (PEDESTRIAN UNDERCROSSING FLUORESCENT LIGHTING FIXTURE) ES-12B 477
ELECTRICAL SYSTEMS (SPLICING DETAILS) ES-13A 478
ELECTRICAL SYSTEMS (WIRING DETAILS AND FUSE RATINGS) ES-13B 479
ELECTRICAL SYSTEMS (EXTINGUISHABLE MESSAGE SIGN, 250 mm LETTERS) ES-14A 480
ELECTRICAL SYSTEMS (EXTINGUISHABLE MESSAGE SIGN) ES-14B 481
ELECTRICAL SYSTEMS (EXTINGUISHABLE MESSAGE SIGN AND FLASHING BEACONS) ES-14C 482
ELECTRICAL SYSTEMS (SIGN ILLUMINATION EQUIPMENT) ES-15A 483
ELECTRICAL SYSTEMS (915 mm FLUORESCENT SIGN ILLUMINATION EQUIPMENT) ES-15B 484
ELECTRICAL SYSTEMS (SIGN ILLUMINATION EQUIPMENT) ES-15C 485
ELECTRICAL SYSTEMS (LIGHTING SIGN ILLUMINATION CONTROL) ES-15D 486
ELECTRICAL SYSTEMS (CLOSED CIRCUIT TELEVISION POLE DETAILS) ES-16A 487
ELECTRICAL SYSTEMS (CLOSED CIRCUIT TELEVISION POLE DETAILS – OVERHEAD SIGN MOUNTED) ES-16B 488
ELECTRICAL SYSTEMS (CLOSED CIRCUIT TELEVISION – 18.2 m TO 27.4 m HIGH MAST POLE, FOUNDATION DETAILS) ES-16C 489

DIST	COUNTY	ROUTE	KILOMETER POST TOTAL PROJECT	SHEET NO.	TOTAL SHEETS

REGISTERED CIVIL ENGINEER

July 1, 2004
PLANS APPROVAL DATE

REGISTERED PROFESSIONAL ENGINEER
Santo Wong
No. 58698
Exp. 12-31-06
CIVIL
STATE OF CALIFORNIA

The State of California or its officers or agents shall not be responsible for the accuracy or completeness of electronic copies of this plan sheet.

To get to the Caltrans web site, go to: http://www.dot.ca.gov

Caltrans Metric

A

AB	aggregate base
ABBC	asbestos bonded bituminous coated
ABM	air-blown mortar
Abn	abandon
Abut	abutment
AC	asphalt concrete
ACB	asphalt concrete base
ACP	asbestos cement pipe
ADL	added dead load
Adj	adjust
AFES	alternative flared end section
Ahd	ahead
Alt	alternate
AM	time from midnight to noon
AP	alternative pipe
APC	alternative pipe culvert
Approx	approximate
APU	alternative pipe underdrain
ARS	acceleration response spectrum
AS	aggregate subbase
ASRP	aluminum spiral rib pipe
Assy	assembly
ATPB	asphalt treated permeable base
ATPM	asphalt treated permeable material
Ave	avenue
Avg	average
@	at

B

BAGR	bridge approach guard railing
BB	beginning of bridge
B-B	back-to-back
BC	begin horizontal curve
BCR	begin curb return
Beg	begin
Bit Ctd	bituminous coated
Bk	back
Bkf	backfill
Bldg	building
BLM	bridge-log mile
Blvd	boulevard
BM	bench mark
Bot	bottom
Br	bridge
Brg	bearing
BTU	british thermal unit
BVC	begin vertical curve
BW	barbed wire

C

CAA	cable anchor assembly
cal	calorie
CAP	corrugated aluminum pipe
CAPA	corrugated aluminum pipe arch
CAS	construction area sign
CB	concrete barrier
CBW	concrete block wall
C-C	center to center
CG	center of gravity

C continued

Chnl	channel
CI	cast iron
CIDH	cast-in-drilled-hole
CIP	cast-in-place, cast iron pipe
CIPCP	cast in place concrete pipe
CISS	cast-in-steel-shell
CJP	complete joint penetration
CL	chain link
CL-6	chain link fence (6 ft)
Cl	class
Clr	clear, clearance
CM	corrugated metal
cm	centimeters
CMP	corrugated metal pipe
Co	county
Col	column
Conc	concrete
Cond	conduit
Conn	connector
Const	construct, construction
Cont	continuous
Coord	coordinate
CP	candlepower
Cr	creek
CRSP	concreted rock slope protection
CSP	corrugated steel pipe
CSPA	corrugated steel pipe arch
CTB	cement treated base
CTPB	cement treated permeable base
CTPM	cement treated permeable material
Ctrs	centers
Culv	culvert
℄	centerline

D

D	depth
DD	downdrain
Dbl	double
Deg	degree
Del	delineator
Det	detail, detour
DF	douglas fir
DI	drainage inlet, drop inlet
Dia	diameter
Diaph	diaphragm
Dist	distance, district
DMBB	double metal beam barrier
Dr	drive
DTBB	double thrie beam barrier
Dwy	driveway

E

E	east
EA	each
Ease	easement
EB	end of bridge, eastbound
EC	end horizontal curve
ECR	end curb return
ED	edge drain
EDC	edge drain cleanout
EDO	edge drain outlet
EDV	edge drain vent
Elec	electrolier
Elect	electric
Elev	elevation
Emb	embankment
Engr	Engineer
EOD	edge of deck
EP	edge of pavement
Eq	equation
ES	edge of shoulder
ETW	edge of traveled way
EVC	end vertical curve
EW	endwall
Exc	excavation
Exist, (E)	existing
Exp	expansion, expressway
Exp Jt	expansion joint
Ext	exterior

F

F & C	frame and cover
F & G	frame and grate
FB	floor beam
Fdn	foundation
FEBT	facing eastbound traffic
FES	flared end section
FF	filter fabric
FG	finished grade
FH	fire hydrant
Fig	figure
FL	flow line
FNBT	facing northbound traffic
FOB	free on board
FOC	face of concrete
Fr Rd	frontage road
FS	far side, finished surface
FSBT	facing southbound traffic
Ftg	footing
FWBT	facing westbound traffic
Fwy	freeway

G

g	acceleration due to gravity
Ga	gage
Galv	galvanized
GP	grading plane
GR	guard railing
GSP	galvanized steel pipe

G continued

Gtr	gutter

H

H	height
h, hr	hour
HD	horizontal drain
hdwl	headwall
Hex Hd	hexagonal head
Horiz	horizontal
HP	hinge point, horsepower
HPS	high performance steel
HS	high strength
HW	headwall, high water
HWM	high water mark
Hwy	highway

I

IB	imported borrow
ID	inside diameter
IF	inside face
Int	interior
Inv	invert
Irr	irrigation

J

Jct	junction
JP	joint pole
JPCP	jointed plain concrete pavement
JS	junction structure
Jt	joint

K

km	kilometer (always lower case)
KP	kilometer post

L

L	length
Lat	latitude
LCB	lean concrete base
Ln	lane
Loc	location
LOL	layout line
Long	longitude
Longit	longitudinal
LS	lump sum
Lt	left

STATE OF CALIFORNIA
DEPARTMENT OF TRANSPORTATION

ACRONYMS AND ABBREVIATIONS (A-L)

NO SCALE

A10A

2004 Std PLAN A10A

1

07-20-04

Back to Table of Contents

M

Maint	maintenance
Max	maximum
MB	metal beam
MBB	metal beam barrier
MBGR	metal beam guard railing
Med	median
MH	manhole
Min	minimum
Misc	miscellaneous
Misc I & S	miscellaneous iron and steel
Mkr	marker
mm	millimeter(s)
Mod	modified,
	modify
Mon	monument
MP	metal plate
MPGR	metal plate guard railing
MR	movement rating
MSE	mechanically stabilized embankment
Mtl	material

N

N	north
(N)	new
NB	northbound
No.	number (must have period)
Nos.	numbers (must have period)
NPS	nominal pipe size
NS	near side
NTS	not to scale
ø	nominal diameter

O

Oblr	obliterate
OC	overcrossing
OD	outside diameter
OF	outside face
OG	original ground
OGAC	open graded asphalt concrete
OH	overhead
O-O	out to out
Opp	opposite

P

p	page
PAP	perforated aluminum pipe
PB	pull box
PC	point of curvature,
	precast
PCC	point of compound curve,
	portland cement concrete
PCP	perforated concrete pipe,
	prestressed concrete pipe
PCVC	point of compound vertical curve
Ped	pedestrian
Ped OC	pedestrian overcrossing
Ped UC	pedestrian undercrossing
Perm Mtl	permeable material
PG	profile grade

P continued

PI	point of intersection
PJP	partial joint penetration
PL	plate
P/L	property line
PM	post mile,
	time from noon to midnight
PN	paving notch
POC	point of horizontal curve
POT	point of tangent
POVC	point of vertical curve
PP	pipe pile,
	plastic pipe,
	power pole
PPL	preformed permeable liner
PPP	perforated plastic pipe
PRC	point of reverse curve
PRF	pavement reinforcing fabric
PRVC	point of reverse vertical curve
PS&E	plans, specifications and estimates
PS, P/S	prestressed
PSP	perforated steel pipe
PT	point of tangency
PVC	polyvinyl chloride
Pvmt	pavement

Q

Qty	quantity

R

R	radius
R & D	remove and dispose
R & S	remove and salvage
R/C	rate of change
RCA	reinforced concrete arch
RCB	reinforced concrete box
RCP	reinforced concrete pipe
RCPA	reinforced concrete pipe arch
Rd	road
Reinf	reinforced,
	reinforcement,
	reinforcing
Rel	relocate
Repl	replacement
Ret	retaining
Rev	revised
Rdwy	roadway
RM	road-mixed
RP	radius point,
	reference point
RR	railroad
RSP	rock slope protection
Rt	right
Rte	route
RW	redwood,
	retaining wall
R/W	right of way
Rwy	railway

S

S	south,
	supplement
SAE	structure approach embankment
Salv	salvage
SAPP	structural aluminum plate pipe
SB	southbound
SC	sand cushion
SCSP	sacked concrete slope protection,
	slotted corrugated steel pipe
SD	storm drain
Sec	second,
	section
Sep	separation
SG	subgrade
Shld	shoulder
Sht	sheet
SI	international system of units
Sim	similar
SL	station line
SM	selected material
Spec	special,
	specifications
SPP	slotted plastic pipe
SS	slope stake
SSBM	strap and saddle bracket method
SSD	structural section drain
SSPA	structural steel plate arch
SSPP	structural steel plate pipe
SSPPA	structural steel plate pipe arch
SSRP	steel spiral rib pipe
St	street
STA, Sta	station
STBB	single thrie beam barrier
Std	standard
Str	structure
Surf	surfacing
SW	sidewalk,
	sound wall
Swr	sewer
Sym	symmetrical
S4S	surface 4 sides

T

T	semi-tangent
TAB	tablet
Tan	tangent
TBB	thrie beam barrier
Tbr	timber
TC	top of curb
TCB	traffic control box
Tel	telephone
Temp	temporary
TG	top of grade
Tot	total
TP	telephone pole
TPB	treated permeable base
TPM	treated permeable material
Trans	transition,
	transverse

T continued

TS	traffic signal,
	tubular steel
Typ	typical

U

UC	undercrossing
UD	underdrain
UON	unless otherwise noted
UP	underpass

V

V	valve,
	design speed
Var	variable
VC	vertical curve
VCP	vitrified clay pipe
Vert	vertical
Via	viaduct
Vol	volume

W

W	west,
	width
WB	westbound
WH	weep hole
WM	wire mesh
WS	water surface
WSP	welded steel pipe
Wt	weight
WV	water valve
WW	wing wall
WWLOL	wingwall layout line

X

X Sec	cross section
Xing	crossing

Y

Yr	year
Yrs	years

Caltrans Metric

DIST	COUNTY	ROUTE	KILOMETER POST TOTAL PROJECT	SHEET NO.	TOTAL SHEETS

REGISTERED CIVIL ENGINEER

July 1, 2004
PLANS APPROVAL DATE

REGISTERED PROFESSIONAL ENGINEER Santo Wong No. 58698 Exp. 12-31-06 CIVIL STATE OF CALIFORNIA

The State of California or its officers or agents shall not be responsible for the accuracy or completeness of electronic copies of this plan sheet.

To get to the Caltrans web site, go to: http://www.dot.ca.gov

SI PREFIXES

SYMBOL	PREFIX	MULTIPLICATION FACTOR
m	milli-	10^{-3}
k	kilo-	10^{3}
M	mega-	10^{6}
G	giga-	10^{9}

METRIC UNITS (SI)

SYMBOL	UNIT
m	meter
g	gram
s	second
A	ampere
°C	degrees Celsius
Hz	hertz
N	newton
Pa	pascal
L	liter
ha	hectare
W	Watt

STATE OF CALIFORNIA
DEPARTMENT OF TRANSPORTATION

ACRONYMS AND ABBREVIATIONS (M-Z)

NO SCALE

A10B

2004 Std PLAN A10B

07-20-04

Back to Table of Contents

DIST	COUNTY	ROUTE	KILOMETER POST TOTAL PROJECT	SHEET NO.	TOTAL SHEETS

Caltrans Metric

REGISTERED CIVIL ENGINEER

July 1, 2004
PLANS APPROVAL DATE

REGISTERED PROFESSIONAL ENGINEER Jeff C. Kepley No. 53561 Exp. 6-30-07 CIVIL STATE OF CALIFORNIA

The State of California or its officers or agents shall not be responsible for the accuracy or completeness of electronic copies of this plan sheet.

To get to the Caltrans web site, go to: http://www.dot.ca.gov

SYMBOLOGY FOR CONSTRUCTION FEATURES

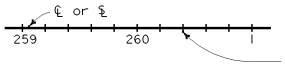

Centerline
Station Line
Alignment Line

Intermediate ticks @ 20 m intervals

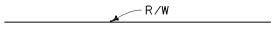

Right of Way Line

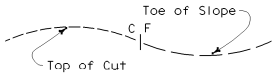

Slope Line

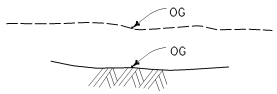

Original Ground Line

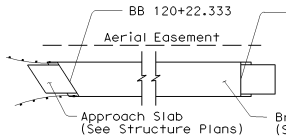

Structure (Bridge

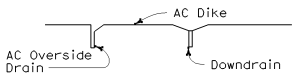

Dike, Downdrain and Oversize Drain

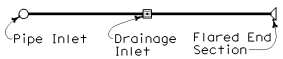

Pipe Culvert - single line
(900 mm or less in diameter)
(plus - other drainage features)

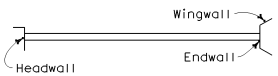

Pipe Culvert - two lines
greater than 900 mm in diameter)
(plus - other drainage features)

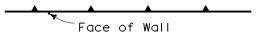

Wall

Existing Guard Railing
(to be modified)

New Guard Railing

Concrete (Median) Barrier

Wall on Barrier

Temporary Railing (Type K)

Double Thrie Beam Barrier

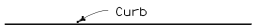

Curb without Gutter

Curb with Gutter
(curb-lip, flow line, back-top of curb)

Fence

Ditch Flow Line

Existing Walls or Barriers should be shown as hollow filled
(See example of Wall below)

Existing Wall

AERIAL UTILITES

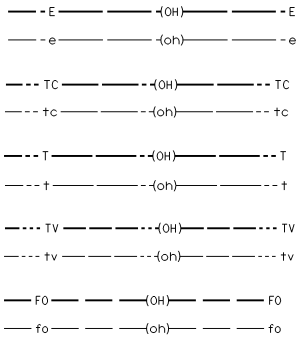

New Electrical
Exist Electrical
New Telemeter Cable
Exist Telemeter Cable
New Telephone
Exist Telephone
New Television
Exist Television
New Fiber Optic
Exist Fiber Optic

UNDERGROUND UTILITIES

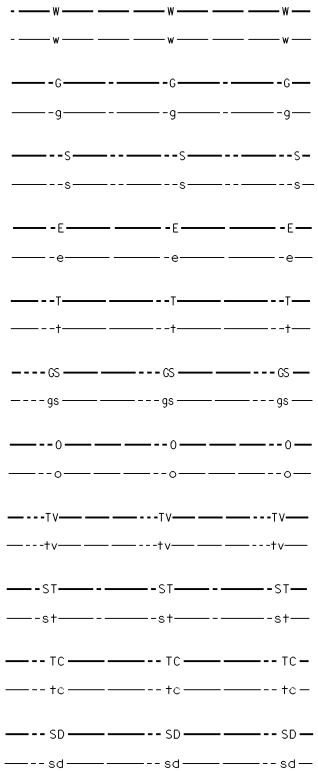

New Water
Exist Water
New Gas
Exist Gas
New Sewer
Exist Sewer
New Electrical
Exist Electrical
New Telephone
Exist Telephone
New Gasoline
Exist Gasoline
New Oil
Exist Oil
New Television
Exist Televison
New Steam
Exist Steam
New Telemeter Cable
Exist Telemeter Cable
New Storm Drain
Exist Storm Drain

STATE OF CALIFORNIA
DEPARTMENT OF TRANSPORTATION

SYMBOLS
(SHEET 1 OF 2)

NO SCALE

A10C

2004 Std PLAN A10C

3

07-14-04

Back to Table of Contents

PHOTOGRAMMETRIC MAPPING LINES AND SYMBOLS

PHOTOGRAMMETRIC MAPPING IS DPOPPED OUT ON FINAL CONTRACT PLANS

Curb

Lane Stripe

Edge of Traveled Way (State Highway)

Edge of Traveled Way (Other)

Edge of Asphalt (Shoulder)

Concrete

Guard Railing

Median Barrier

Fence

Masonry Wall

Masonry Wall and Fence

Retaining Wall

Retaining Wall and Fence

Retaining Wall and Masonry Wall

Flowline (Natural and Manmade)

22.67 — Edge of Body of Water, Surface Hatched and Spot Elevation on Surface

DECK — Deck, Building, Covered Porch or Parking

DP, R — Dirt Pile, Rock

POOL (P), SPA (S) — Pool, Spa

Trees, Brush, or Vegetation over ½ contour interval in height

Vineyard Row

Cattle Guard

Overhead Sign - Single Post

Overhead Sign - Two Post

Trail

DIRT — Dirt Road

SYMBOLS

ENLARGED FOR CLARITY

Left Turn Lane Arrow

HOV Lane (High Occupancy Vehicle)

Drop Inlet, Round Drop Inlet

Manhole

Fire Hydrant

VC, SP, WELL, UB, RS — Valve Cover, Stand Pipe, Well, Utility Box, Railroad Crossing Standard

Utility Pole, Pole and Wires, Pole with Wires and Anchor

Transmission Tower

Electrolier, Electrolier on Pole

TS, RS — Traffic Signal, Railroad Signal

Call Box

Signs - Single Post, Two Posts

P — Single Tree, Palm

Marsh or Swamp

CC — Crash Cushion

TANK, T — Tank

TOPOGRAPHY

324, 322 — Index Contour, Intermediate Contours, Index Contour

GNV Contour (Ground Not Visible)

Depression Contour

GNV Depresion Contour

342.43 — Spot Elevation (at decimal point)

RAILROAD

Scale 1:1000

Scale 1:500, 1:200

CONTROL POINTS

Horizontal and Vertial Control Point

Horizontal Control Point

Vertial Control Point

BOUNDARY LINE

State

County

City

Forest

Subdivision, Section, Grant

Rancho

WATER WAYS

Rivers, Streams and Creeks - small (One Line)

Rivers, Streams and Creeks - large (Two Lines) (which defines the water edge)

Land, Ocean — Ocean -(Graduated Line Weights)

Water Edge, Lake, Pond, Swamp

Caltrans Metric

DIST	COUNTY	ROUTE	KILOMETER POST TOTAL PROJECT	SHEET NO.	TOTAL SHEETS

REGISTERED CIVIL ENGINEER

July 1, 2004
PLANS APPROVAL DATE

REGISTERED PROFESSIONAL ENGINEER Jeff C. Kepley No. 53361 Exp. 6-30-07 CIVIL STATE OF CALIFORNIA

The State of California or its officers or agents shall not be responsible for the accuracy or completeness of electronic copies of this plan sheet.

To get to the Caltrans web site, go to: http://www.dot.ca.gov

STATE OF CALIFORNIA
DEPARTMENT OF TRANSPORTATION

SYMBOLS (SHEET 2 OF 2)

NO SCALE

A10D

2004 Std PLAN A10D

07-14-04

Back to Table of Contents

DIST	COUNTY	ROUTE	KILOMETER POST TOTAL PROJECT	SHEET NO.	TOTAL SHEETS

Donald E. Howe
REGISTERED CIVIL ENGINEER

July 1, 2004
PLANS APPROVAL DATE

REGISTERED PROFESSIONAL ENGINEER Donald E. Howe No. C46402 Exp. 3-31-07 CIVIL STATE OF CALIFORNIA

The State of California or its officers or agents shall not be responsible for the accuracy or completeness of electronic copies of this plan sheet.

Caltrans Metric

CENTERLINES
(2 LANE HIGHWAYS)

DETAIL 1

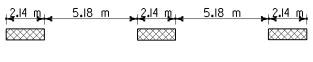

DETAIL 2

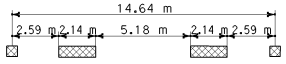

DETAIL 3

Detail 3 deleted

DETAIL 4

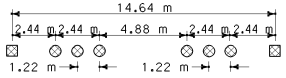

DETAIL 5

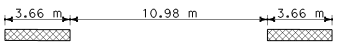

DETAIL 6

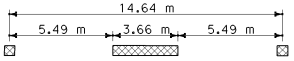

DETAIL 7

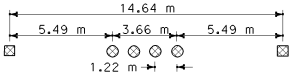

LANELINES
(MULTILANE HIGHWAYS)

DETAIL 8

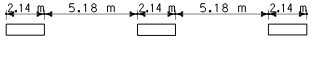

DETAIL 9

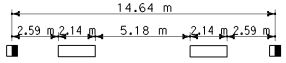

DETAIL 10

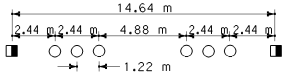

DETAIL 11

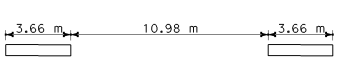

LANELINES (CONT)
(MULTILANE HIGHWAYS)

DETAIL 12

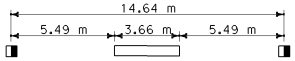

DETAIL 13

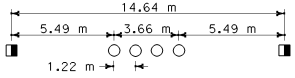

DETAIL 14

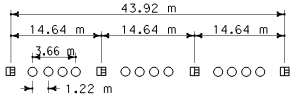

DETAIL 14A

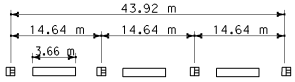

NO PASSING ZONES-ONE DIRECTION

DETAIL 15

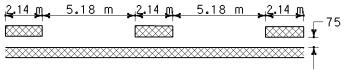

DETAIL 16

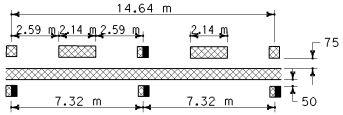

DETAIL 17

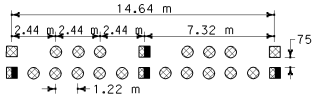

DETAIL 18

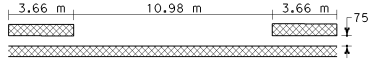

DETAIL 19

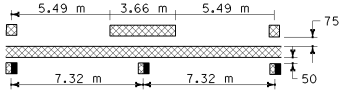

DETAIL 20

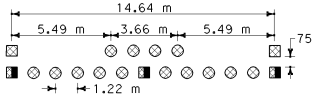

NO PASSING ZONES-TWO DIRECTION

DETAIL 21

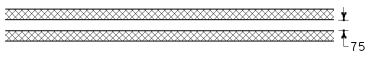

DETAIL 22

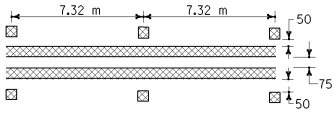

DETAIL 23

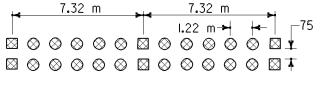

LEGEND

MARKERS

- TYPE A White Non-reflective
- TYPE AY Yellow Non-reflective
- TYPE C Red-clear Retroreflective
- TYPE D Two-way Yellow Retroreflective
- TYPE G One-way Clear Retroreflective
- TYPE H One-way Yellow Retroreflective

LINES

- 100 mm White
- 100 mm Yellow
- Direction of Travel

MARKER DETAILS

Retroreflective Face

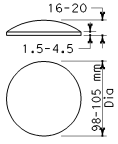

TYPE A & TYPE AY

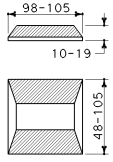

TYPE C & TYPE D

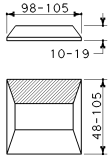

TYPE G & TYPE H

TYPICAL LANE LINE DELINEATION IN ADVANCE OF EXIT RAMP

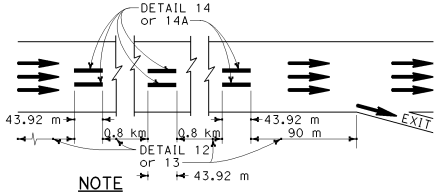

NOTE

Detail 14 is to be used in combination with Detail 13. Detail 14A is to be used in combination with Detail 12.

STATE OF CALIFORNIA
DEPARTMENT OF TRANSPORTATION

PAVEMENT MARKERS AND TRAFFIC LINES TYPICAL DETAILS

NO SCALE

ALL DIMENSIONS ARE IN MILLIMETERS UNLESS OTHERWISE SHOWN

A20A

2004 Std PLAN A20A

05-07-04

Back to Table of Contents

LEFT EDGELINES
(DIVIDED HIGHWAYS)

DETAIL 24

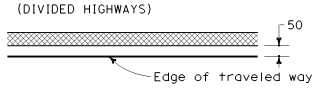

DETAIL 25

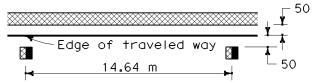

DETAIL 25A

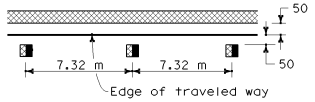

DETAIL 26

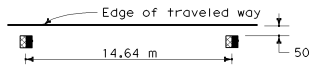

DETAIL 27

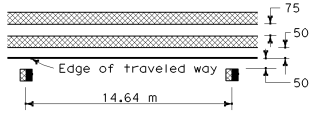

RIGHT EDGELINES

DETAIL 27A

Detail 27A deleted

DETAIL 27B

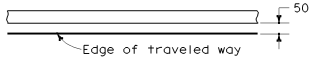

RIGHT EDGELINE EXTENSION THROUGH INTERSECTIONS

DETAIL 27C

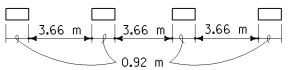

MEDIAN ISLANDS

DETAIL 28

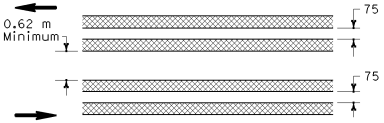

DETAIL 29

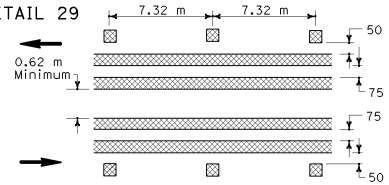

DETAIL 30

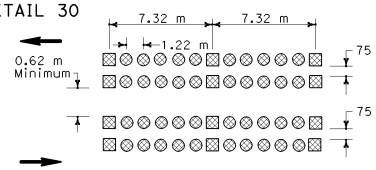

TWO-WAY LEFT TURN LANES

DETAIL 31

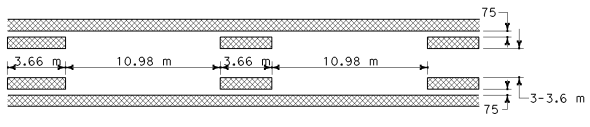

DETAIL 32

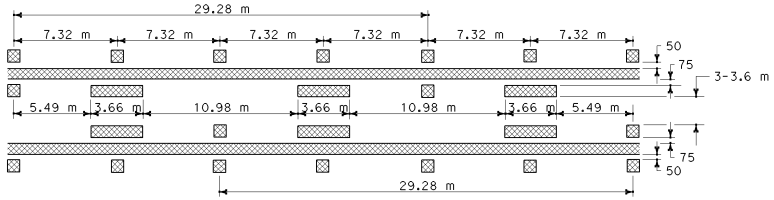

DETAIL 33

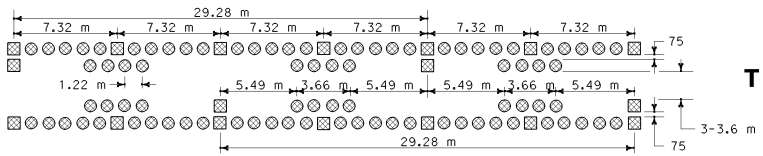

LEGEND

MARKERS

- TYPE AY Yellow Non-reflective
- TYPE D Two-way Yellow Retroreflective
- TYPE H One-way Yellow Retroreflective

LINES

- 100 mm White
- 100 mm Yellow
- Direction of Travel

Caltrans Metric

DIST	COUNTY	ROUTE	KILOMETER POST TOTAL PROJECT	SHEET NO.	TOTAL SHEETS

Donald E. Howe
REGISTERED CIVIL ENGINEER

July 1, 2004
PLANS APPROVAL DATE

REGISTERED PROFESSIONAL ENGINEER Donald E. Howe NO. C46402 Exp. 3-31-07 CIVIL STATE OF CALIFORNIA

The State of California or its officers or agents shall not be responsible for the accuracy or completeness of electronic copies of this plan sheet.

To get to the Caltrans web site, go to: http://www.dot.ca.gov

INTERSECTION TREATMENTS

DETAIL 34

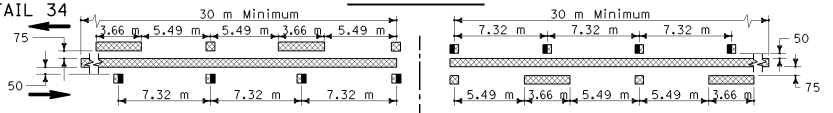

DETAIL 34A

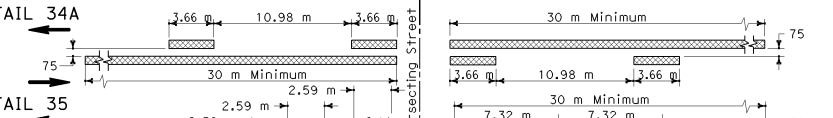

DETAIL 35

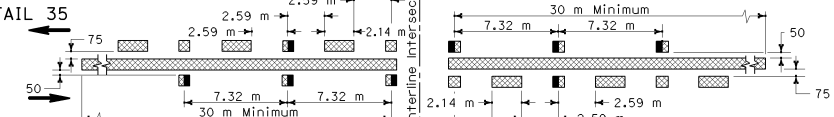

DETAIL 35A

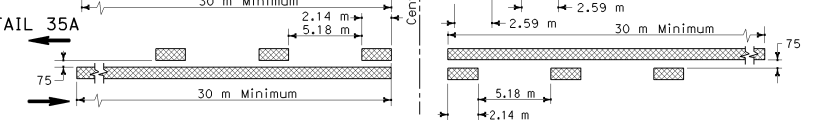

MARKER DETAILS

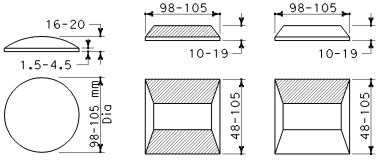

TYPE AY TYPE D TYPE H

Retroreflective Face

STATE OF CALIFORNIA
DEPARTMENT OF TRANSPORTATION

PAVEMENT MARKERS AND TRAFFIC LINES TYPICAL DETAILS

NO SCALE

ALL DIMENSIONS ARE IN MILLIMETERS UNLESS OTHERWISE SHOWN

A20B

04-23-04

Back to Table of Contents

DIST	COUNTY	ROUTE	KILOMETER POST TOTAL PROJECT	SHEET NO.	TOTAL SHEETS

Caltrans Metric

REGISTERED CIVIL ENGINEER

July 1, 2004
PLANS APPROVAL DATE

REGISTERED PROFESSIONAL ENGINEER Donald E. Howe No. C46402 Exp. 3-31-07 CIVIL STATE OF CALIFORNIA

The State of California or its officers or agents shall not be responsible for the accuracy or completeness of electronic copies of this plan sheet.

To get to the Caltrans web site, go to: http://www.dot.ca.gov

EXIT RAMP NEUTRAL AREA (GORE) TREATMENT

DETAIL 36

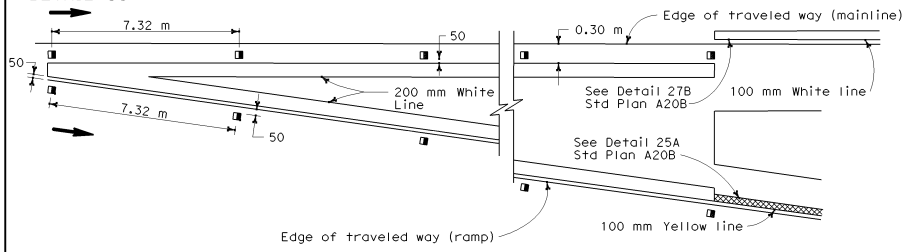

ENTRANCE RAMP NEUTRAL AREA (MERGE) TREATMENT

DETAIL 36A

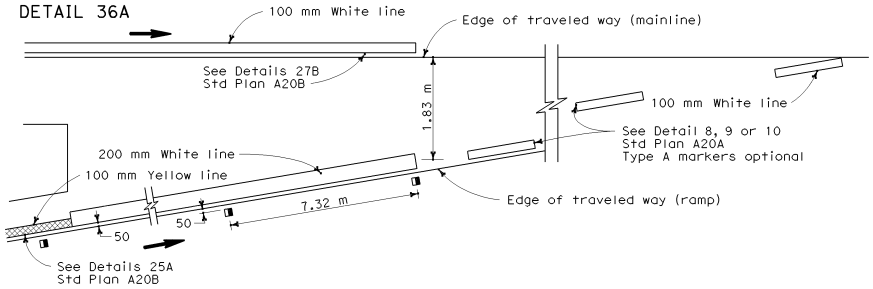

ENTRANCE RAMP NEUTRAL AREA (ACCELERATION LANE) TREATMENT

DETAIL 36B

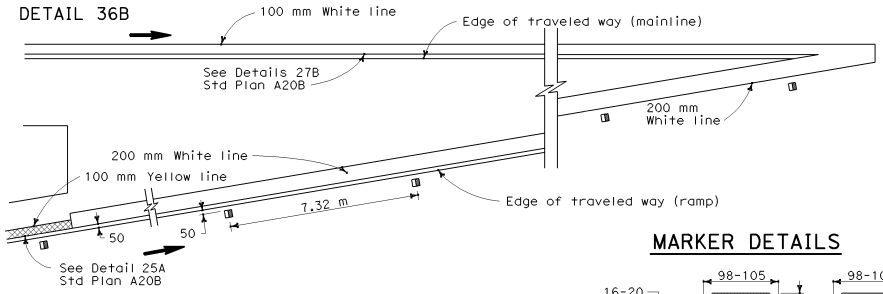

LANE DROP AT EXIT RAMPS

DETAIL 37

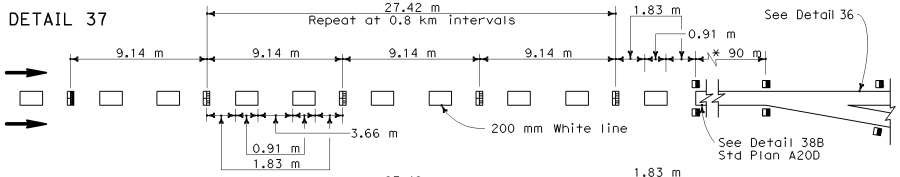

DETAIL 37A

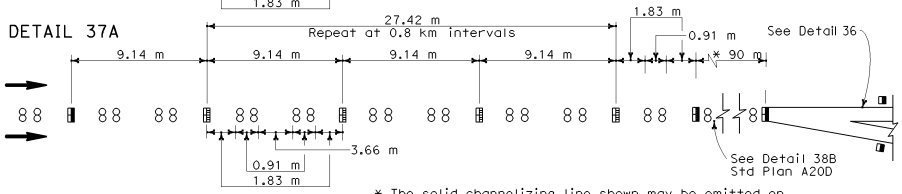

* The solid channelizing line shown may be omitted on short auxiliary lanes where weaving length is critical.

LANE DROP AT INTERSECTIONS

DETAIL 37B

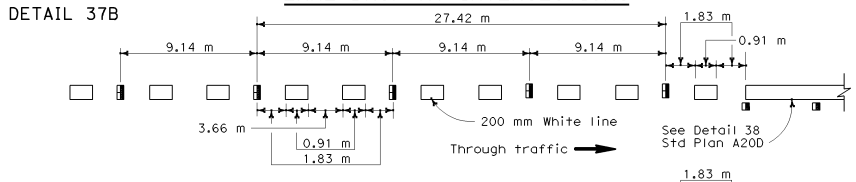

DETAIL 37C

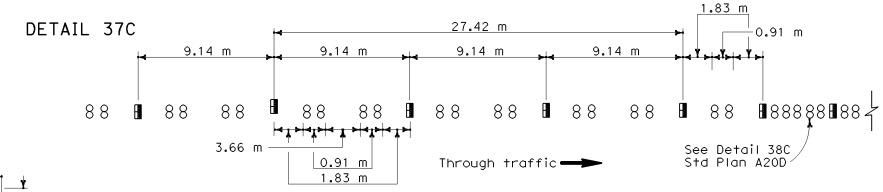

MARKER DETAILS

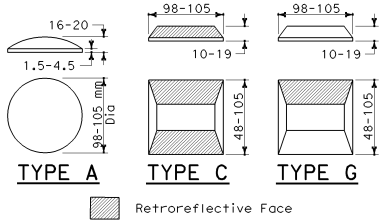

LEGEND

MARKERS

- TYPE A White Non-reflective
- TYPE C Red-clear Retroreflective
- TYPE G One-way Clear Retroreflective
- Direction of Travel

STATE OF CALIFORNIA
DEPARTMENT OF TRANSPORTATION

PAVEMENT MARKERS AND TRAFFIC LINE TYPICAL DETAILS

NO SCALE

ALL DIMENSIONS ARE IN MILLIMETERS UNLESS OTHERWISE SHOWN

A20C

2004 Std PLAN A20C

7

04-23-04

Back to Table of Contents

CHANNELIZING LINE

DETAIL 38

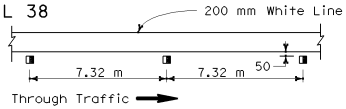

DETAIL 38A

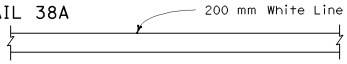

DETAIL 38B

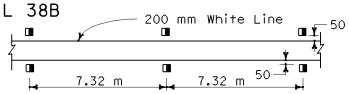

DETAIL 38C

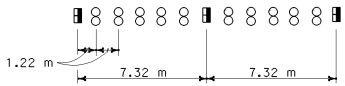

BIKE LANE LINE

DETAIL 39

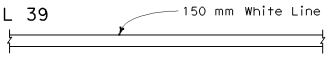

INTERSECTION LINE
BIKE LANE

DETAIL 39A

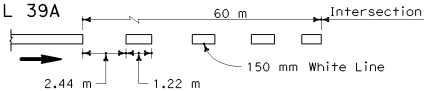

LEGEND

MARKERS

- TYPE A White Non-reflective
- TYPE AY Yellow Non-Reflective
- TYPE G One-way Clear Retroreflective
- 100 mm Yellow Line
- Direction of Travel

MARKER DETAILS

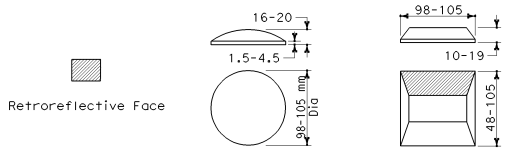

TYPE A & TYPE AY

TYPE G

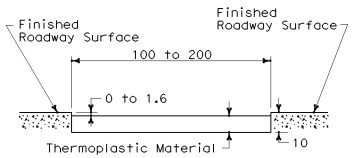

DETAIL FOR RECESSED THERMOPLASTIC TRAFFIC STRIPE

See Notes A and B.

RECESSED THERMOPLASTIC NOTES

A. See typical traffic line details for pavement marking patterns.

B. The top of the thermoplastic installed in recessed pavement shall be 0 to 1.6 mm below the pavement surface.

LANE LINE EXTENSIONS THROUGH INTERSECTIONS

DETAIL 40

DETAIL 40A

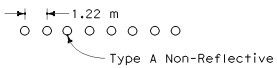

CENTER LINE EXTENSIONS THROUGH INTERSECTIONS

DETAIL 41

DETAIL 41A

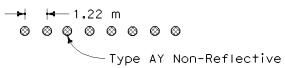

Caltrans Metric

DIST	COUNTY	ROUTE	KILOMETER POST TOTAL PROJECT	SHEET NO.	TOTAL SHEETS

REGISTERED CIVIL ENGINEER

July 1, 2004
PLANS APPROVAL DATE

REGISTERED PROFESSIONAL ENGINEER Donald E. Howe No. C46402 Exp. 3-31-07 CIVIL STATE OF CALIFORNIA

The State of California or its officers or agents shall not be responsible for the accuracy or completeness of electronic copies of this plan sheet.

To get to the Caltrans web site, go to: http://www.dot.ca.gov

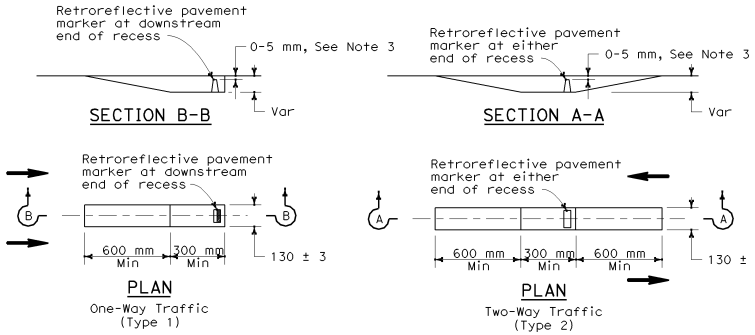

RECESS DETAIL FOR RETROREFLECTIVE PAVEMENT MARKER

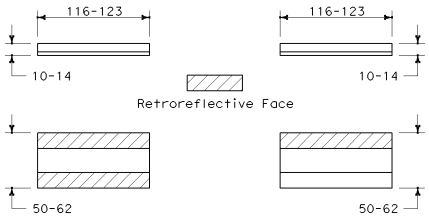

TYPE C & TYPE D

TYPE G & TYPE H

See Notes 1 and 2.

RETROREFLECTIVE PAVEMENT MARKER FOR RECESSED INSTALLATION

RECESSED MARKER NOTES

1. See typical traffic line details for marker patterns to be used with recessed pavement markers. Detail 14 requires a Type 2 recess.
2. The retroreflective pavement markers shown for recessed installations are not to be used for non-recessed installations.
3. The top of pavement markers installed in recesses shall be 0-5 mm below the pavement surface.

STATE OF CALIFORNIA
DEPARTMENT OF TRANSPORTATION

PAVEMENT MARKERS AND TRAFFIC LINES TYPICAL DETAILS

NO SCALE

ALL DIMENSIONS ARE IN MILLIMETERS UNLESS OTHERWISE SHOWN

A20D

2004 Std PLAN A20D

04-23-04

Back to Table of Contents

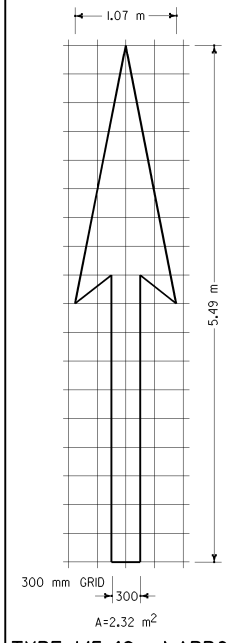

TYPE I(5.49 m) ARROW

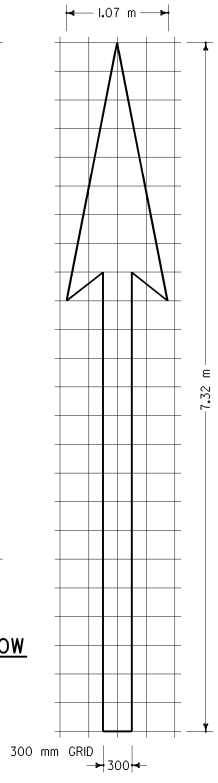

TYPE I(7.32 m) ARROW

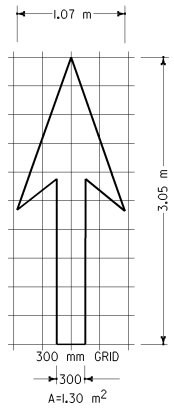

TYPE I(3.05 m) ARROW

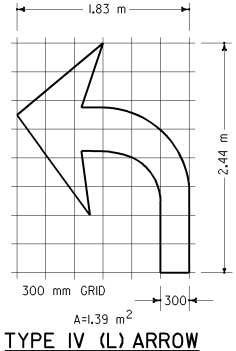

TYPE IV (L) ARROW

(FOR TYPE IV(R) ARROW, USE MIRROR IMAGE)

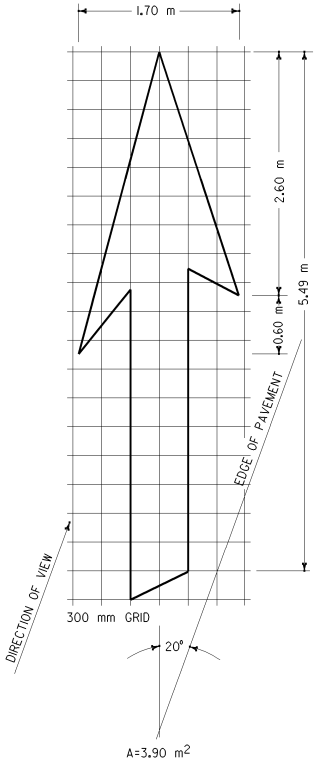

TYPE VI ARROW

RIGHT LANE DROP ARROW (FOR LEFT LANE, USE MIRROR IMAGE)

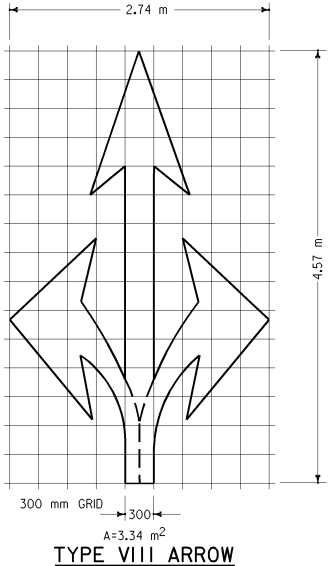

TYPE VIII ARROW

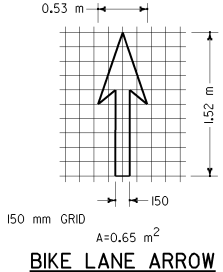

BIKE LANE ARROW

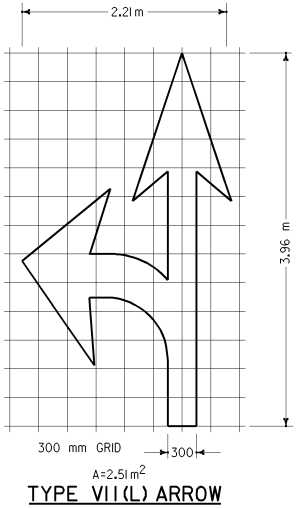

TYPE VII(L) ARROW

(FOR TYPE VII(R) ARROW, USE MIRROR IMAGE)

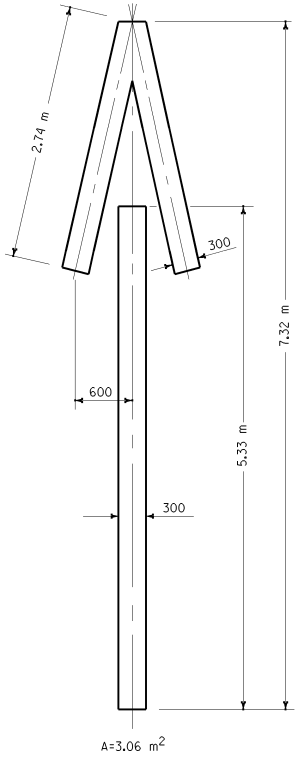

TYPE V ARROW

NOTE

MINOR VARIATIONS IN DIMENSIONS MAY BE ACCEPTED BY THE ENGINEER.

Caltrans Metric

DIST	COUNTY	ROUTE	KILOMETER POST TOTAL PROJECT	SHEET NO.	TOTAL SHEETS

Donald E. Howe
REGISTERED CIVIL ENGINEER

July 1, 2004
PLANS APPROVAL DATE

REGISTERED PROFESSIONAL ENGINEER Donald E. Howe No. C46402 Exp. 3-31-07 CIVIL STATE OF CALIFORNIA

The State of California or its officers or agents shall not be responsible for the accuracy or completeness of electronic copies of this plan sheet.

To get to the Caltrans web site, go to: http://www.dot.ca.gov

STATE OF CALIFORNIA
DEPARTMENT OF TRANSPORTATION

PAVEMENT MARKINGS ARROWS

NO SCALE

ALL DIMENSIONS ARE IN MILLIMETERS UNLESS OTHERWISE SHOWN

A24A

04-23-04

Back to Table of Contents

DIST	COUNTY	ROUTE	KILOMETER POST TOTAL PROJECT	SHEET NO.	TOTAL SHEETS

Caltrans Metric

Donald E. Howe
REGISTERED CIVIL ENGINEER

July 1, 2004
PLANS APPROVAL DATE

REGISTERED PROFESSIONAL ENGINEER Donald E. Howe NO. C46402 Exp. 3-31-07 CIVIL STATE OF CALIFORNIA

The State of California or its officers or agents shall not be responsible for the accuracy or completeness of electronic copies of this plan sheet.

To get to the Caltrans web site, go to: http://www.dot.ca.gov

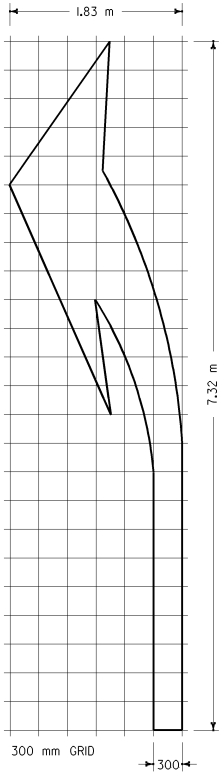

A=3.90 m^2

TYPE III(L) ARROW

(FOR TYPE III(R) USE MIRROR IMAGE)

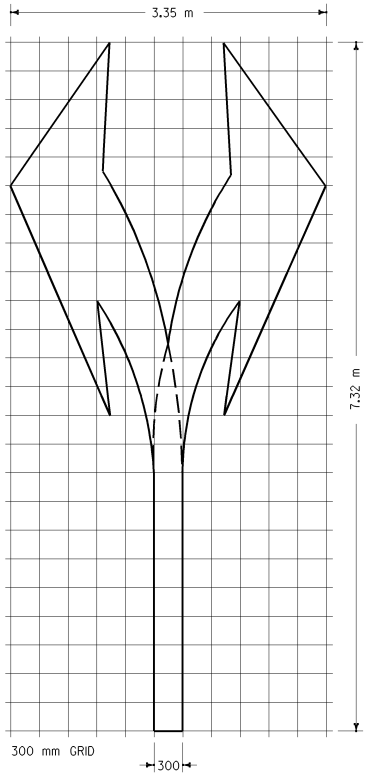

A=6.78 m^2

TYPE III(B) ARROW

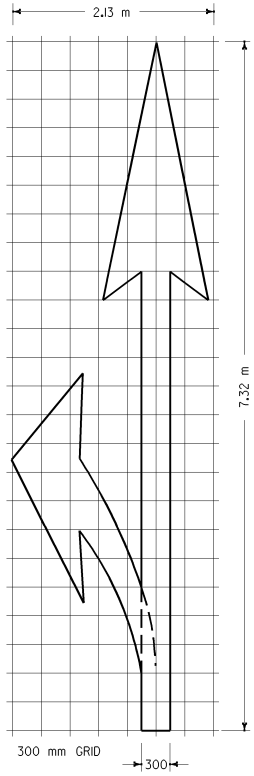

A=4.18 m^2

TYPE II(L) ARROW

(FOR TYPE II(R) USE MIRROR IMAGE)

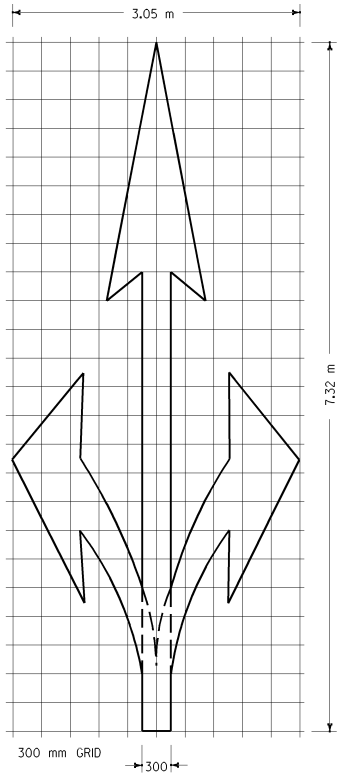

A=5.48 m^2

TYPE II(B) ARROW

NOTE

MINOR VARIATIONS IN DIMENSIONS
MAY BE ACCEPTED BY THE ENGINEER.

STATE OF CALIFORNIA
DEPARTMENT OF TRANSPORTATION

PAVEMENT MARKINGS ARROWS

NO SCALE

ALL DIMENSIONS ARE IN
MILLIMETERS UNLESS OTHERWISE SHOWN

A24B

2004 Std PLAN A24B

04-23-04

Back to Table of Contents

DIST	COUNTY	ROUTE	KILOMETER POST TOTAL PROJECT	SHEET NO.	TOTAL SHEETS

Donald E. Howe
REGISTERED CIVIL ENGINEER

July 1, 2004
PLANS APPROVAL DATE

REGISTERED PROFESSIONAL ENGINEER
Donald E. Howe
No. C46402
Exp. 3-31-07
CIVIL
STATE OF CALIFORNIA

The State of California or its officers or agents shall not be responsible for the accuracy or completeness of electronic copies of this plan sheet.

To get to the Caltrans web site, go to: http://www.dot.ca.gov

Caltrans Metric

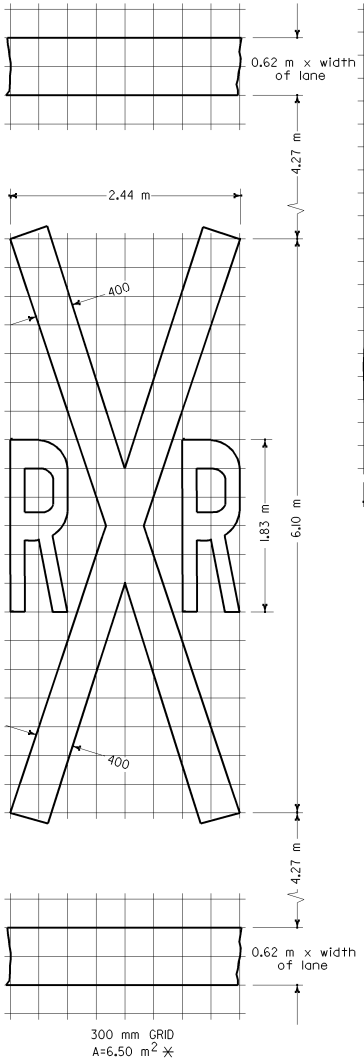

RAILROAD CROSSING SYMBOL

✳6.5 m^2 DOES NOT INCLUDE THE 0.6 m x VARIABLE WIDTH TRANSVERSE LINES.

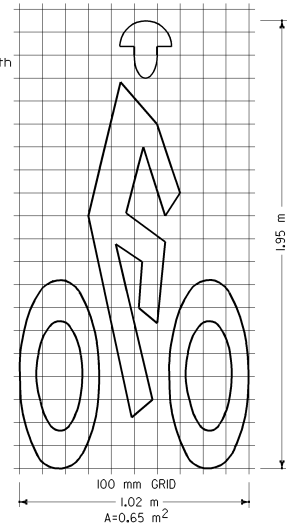

BIKE LANE SYMBOL

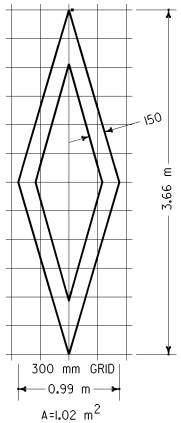

DIAMOND SYMBOL

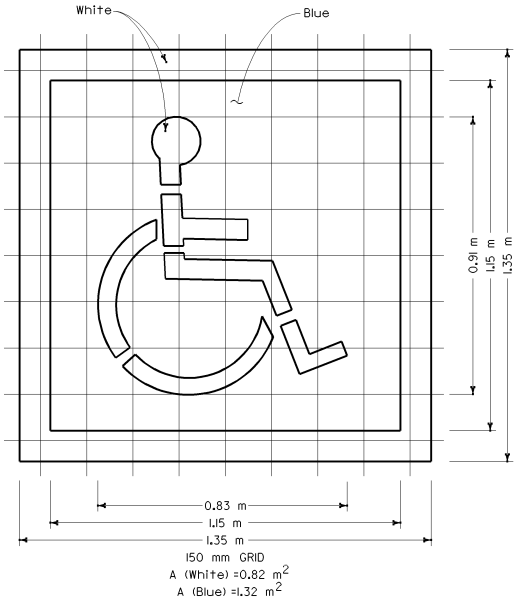

DISABLED PERSONS PARKING SYMBOL

See Note 2

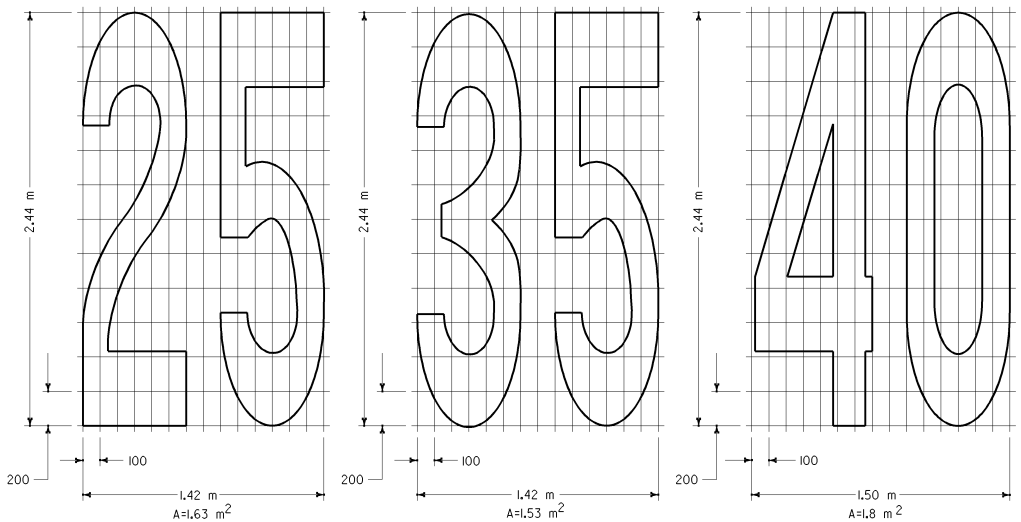

NUMERALS

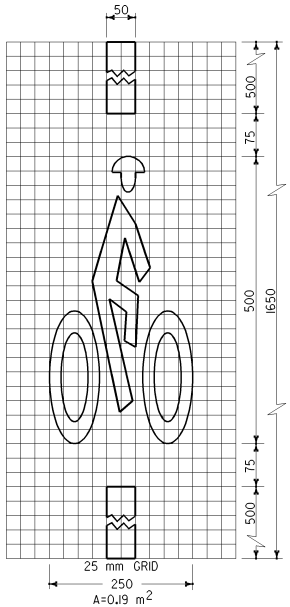

BICYCLE LOOP DETECTOR SYMBOL

NOTES

1. Minor variations in dimensions may be accepted by the Engineer.
2. This parking symbol is also known as the International Symbol of Accessibility (ISA)

STATE OF CALIFORNIA
DEPARTMENT OF TRANSPORTATION

PAVEMENT MARKINGS SYMBOLS AND NUMERALS

NO SCALE

ALL DIMENSIONS ARE IN MILLIMETERS UNLESS OTHERWISE SHOWN

A24C

2004 Std PLAN A24C

04-23-04

Back to Table of Contents

DIST	COUNTY	ROUTE	KILOMETER POST TOTAL PROJECT	SHEET NO.	TOTAL SHEETS

Caltrans Metric

Donald E. Howe
REGISTERED CIVIL ENGINEER

July 1, 2004
PLANS APPROVAL DATE

REGISTERED PROFESSIONAL ENGINEER Donald E. Howe NO. C46402 Exp. 3-31-07 CIVIL STATE OF CALIFORNIA

The State of California or its officers or agents shall not be responsible for the accuracy or completeness of electronic copies of this plan sheet.

To get to the Caltrans web site, go to: http://www.dot.ca.gov

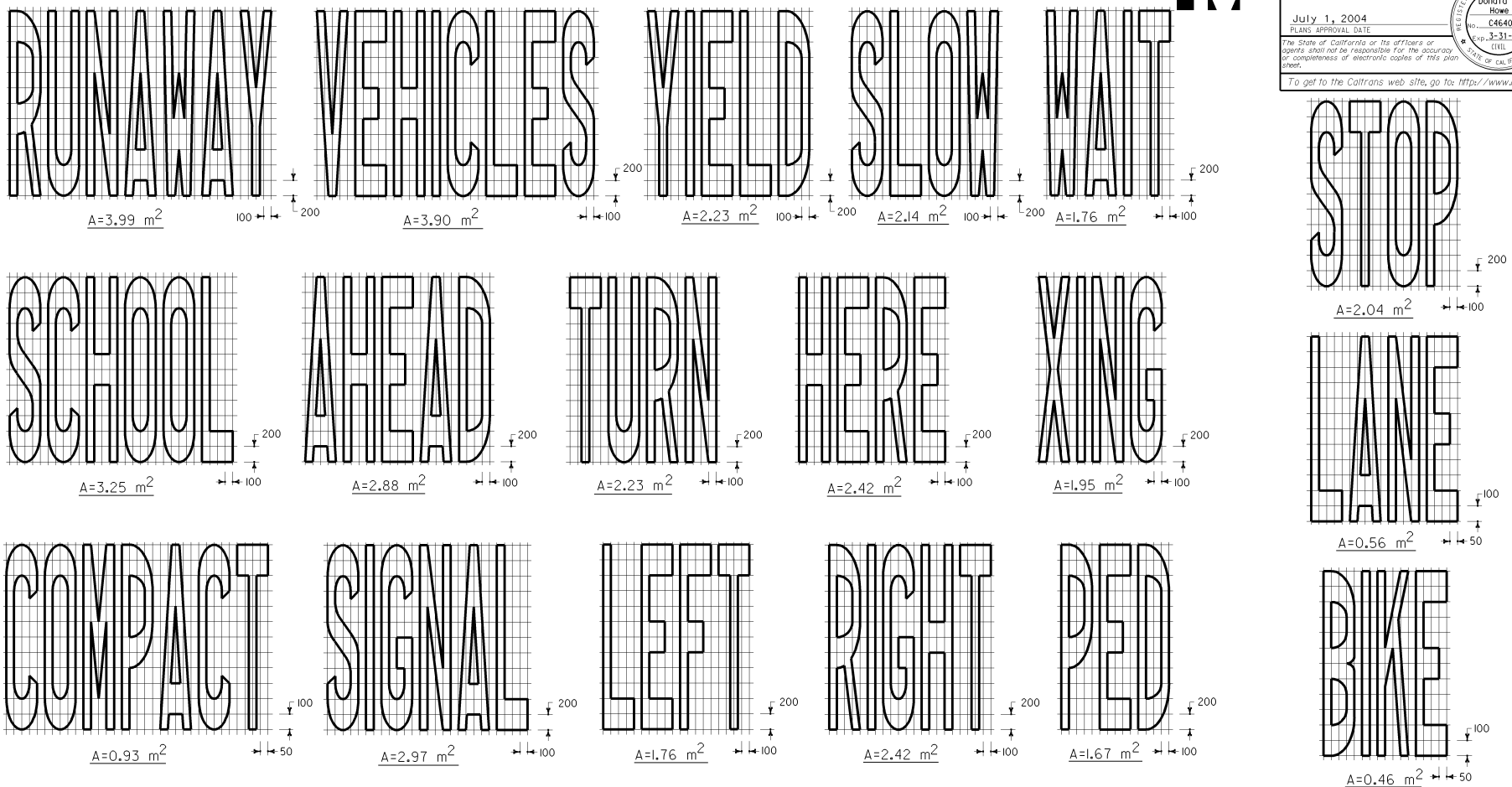

NOTES

(1) If a message consists of more than one word, it should read "UP", i.e., the first word should be nearest the driver.

(2) The space between words should be at least four times the height of the characters for low speed roads, but not more than ten times the height of the characters. The space may be reduced appropriately where there is limited space because of local conditions.

(3) Minor variations in dimensions may be accepted by the Engineer.

(4) Portions of a letter, number or symbol may be separated by connecting segments not to exceed 50 mm in width.

WORD MARKINGS

ITEM	m^2	ITEM	m^2	ITEM	m^2	ITEM	m^2
XING	1.95	YIELD	2.23	BIKE	0.46	PED	1.67
AHEAD	2.88	SCHOOL	3.25	SLOW	2.14	COMPACT	0.93
WAIT	1.76	SIGNAL	2.97	STOP	2.04	RUNAWAY	3.99
LANE	0.56	TURN	2.23	LEFT	1.76	VEHICLES	3.90
RIGHT	2.42	HERE	2.42				

STATE OF CALIFORNIA
DEPARTMENT OF TRANSPORTATION

PAVEMENT MARKINGS WORDS

NO SCALE

ALL DIMENSIONS ARE IN MILLIMETERS UNLESS OTHERWISE SHOWN

A24D

04-23-04

2004 Std PLAN A24D

Back to Table of Contents

DIST	COUNTY	ROUTE	KILOMETER POST TOTAL PROJECT	SHEET NO.	TOTAL SHEETS

Caltrans Metric

REGISTERED CIVIL ENGINEER

July 1, 2004
PLANS APPROVAL DATE

REGISTERED PROFESSIONAL ENGINEER Donald E. Howe No. C46402 Exp. 3-31-07 CIVIL STATE OF CALIFORNIA

The State of California or its officers or agents shall not be responsible for the accuracy or completeness of electronic copies of this plan sheet.

To get to the Caltrans web site, go to: http://www.dot.ca.gov

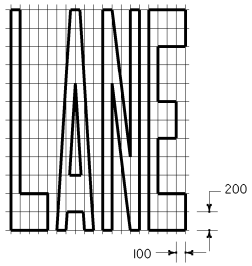

A=2.23 m²

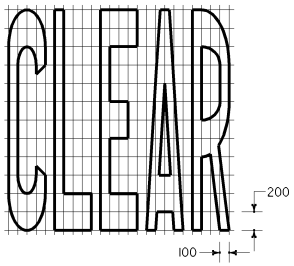

A=2.51 m²

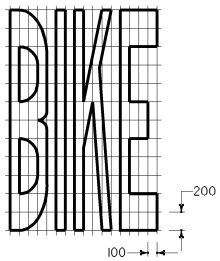

A=1.95 m²

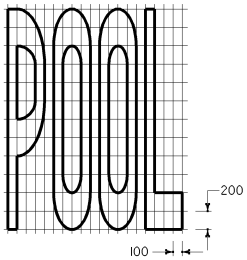

A=2.14 m²

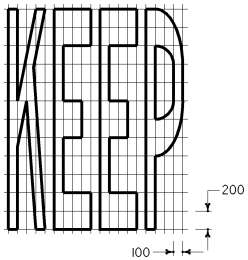

A=2.23 m²

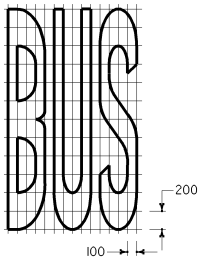

A=1.86 m²

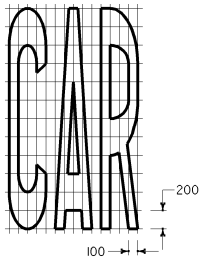

A=1.58 m²

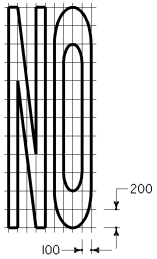

A=1.30 m²

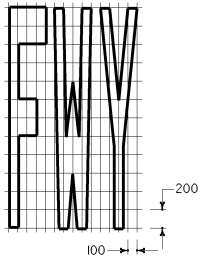

A=1.49 m²

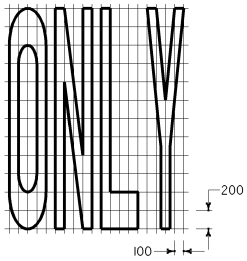

A=2.04 m²

CROSSWALK AND LIMIT LINE

See Note 5

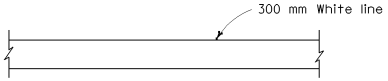

YIELD LINE

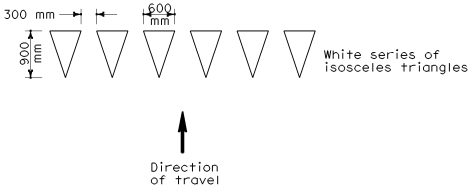

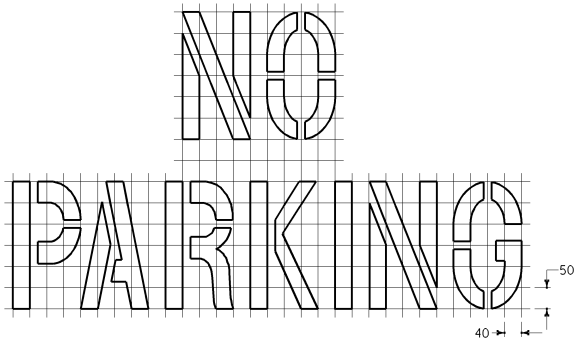

A=0.21 m²

See Notes 6 and 7

NOTES

1. If a message consists of more than one word, it should read "UP", i.e., the first word should be nearest the driver.
2. The space between words should be at least four times the height of the characters for low speed roads, but not more than ten times the height of the characters. The space may be reduced appropriately where there is limited space because of local conditions.
3. Minor variations in dimensions may be accepted by the Engineer.
4. Portions of a letter, number or symbol may be separated by connecting segments not to exceed 50 mm in width.
5. Crosswalks contiguous to schoolgrounds are to be 300 mm yellow lines in place of 300 mm white shown.
6. The words "NO PARKING" pavement marking is to be used for parking facilities. For typical locations of markings, see Standard Plans A90A and A90B.
7. The words "NO PARKING", shall be painted in white letters no less than 300 mm high on a contrasting background and located so that it is visible to traffic enforcement officials.

WORD MARKINGS			
ITEM	m²	ITEM	m²
LANE	2.23	NO	1.30
POOL	2.14	BIKE	1.95
CAR	1.58	BUS	1.86
CLEAR	2.51	ONLY	2.04
KEEP	2.23	FWY	1.49

STATE OF CALIFORNIA
DEPARTMENT OF TRANSPORTATION

PAVEMENT MARKINGS WORDS AND CROSSWALKS

NO SCALE

ALL DIMENSIONS ARE IN MILLIMETERS UNLESS OTHERWISE SHOWN

A24E

06-08-04

Back to Table of Contents

DIST	COUNTY	ROUTE	KILOMETER POST TOTAL PROJECT	SHEET NO.	TOTAL SHEETS

Craig A. Copelan
REGISTERED CIVIL ENGINEER

July 1, 2004
PLANS APPROVAL DATE

REGISTERED PROFESSIONAL ENGINEER Craig A. Copelan No. C36301 Exp. 6-30-06 CIVIL STATE OF CALIFORNIA

The State of California or its officers or agents shall not be responsible for the accuracy or completeness of electronic copies of this plan sheet.

To get to the Caltrans web site, go to: http://www.dot.ca.gov

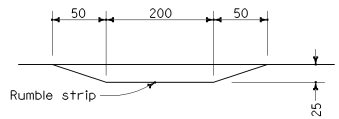

SECTION A-A

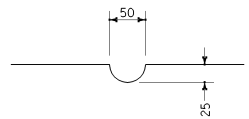

SECTION B-B

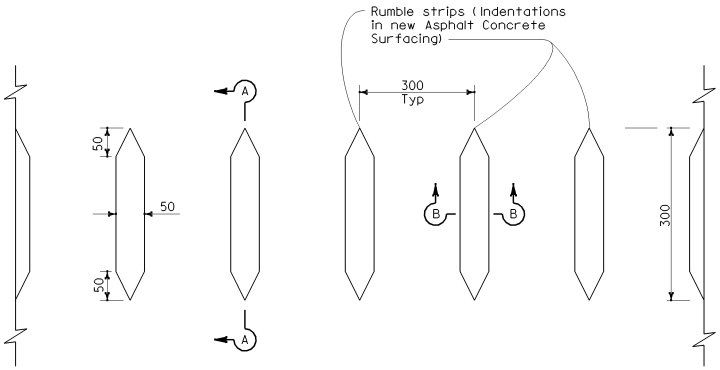

PLAN
ASPHALT CONCRETE SURFACING
ROLLED-IN INDENTATIONS
DETAIL A

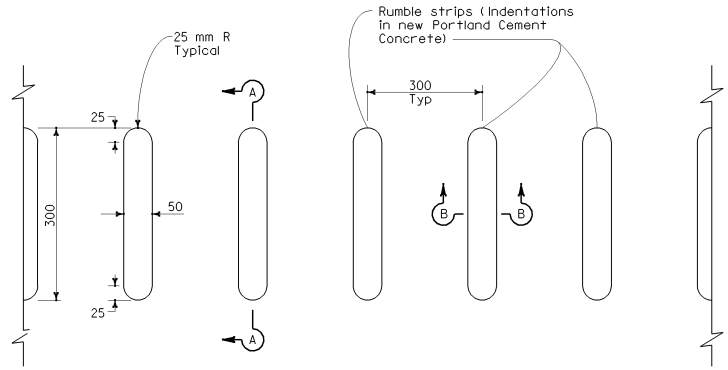

PLAN
PORTLAND CEMENT CONCRETE
ROLLED-IN INDENTATIONS
DETAIL B

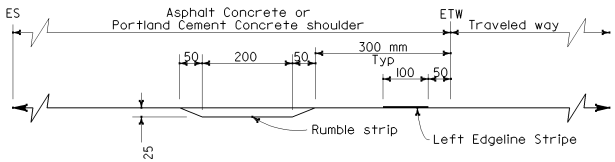

RUMBLE STRIP PLACEMENT
LEFT OF DIRECTION OF TRAVEL

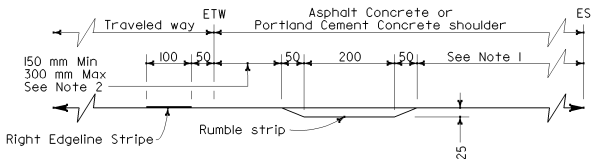

RUMBLE STRIP PLACEMENT
RIGHT OF DIRECTION OF TRAVEL

TYPICAL ROLLED-IN RUMBLE STRIP SHOULDER PLACEMENT

NOTES:

1. Where bicycles are permitted, shoulder rumble strips should not be used right of direction of travel unless a minimum of 1.5 meters of clear shoulder width for bicycle use is available between the rumble strip and the outer edge of the shoulder. Where bicycles are not permitted, a minimum of 1.2 meters of distance is required between the rumble strip and the outer edge of the shoulder.

2. Unless otherwise shown on the plans or specified in the special provisions, the 150 mm offset from the edge of traveled way to the edge of the rumble strip shall be used for rumble strip placement right of the direction of travel.

STATE OF CALIFORNIA
DEPARTMENT OF TRANSPORTATION

SHOULDER RUMBLE STRIP DETAILS ROLLED-IN INDENTATIONS

NO SCALE

ALL DIMENSIONS ARE IN MILLIMETERS UNLESS OTHERWISE SHOWN

A40A

05-13-04

2004 Std PLAN A40A

Back to Table of Contents

DIST	COUNTY	ROUTE	KILOMETER POST TOTAL PROJECT	SHEET NO.	TOTAL SHEETS

Craig A. Copelan
REGISTERED CIVIL ENGINEER

July 1, 2004
PLANS APPROVAL DATE

REGISTERED PROFESSIONAL ENGINEER
Craig A. Copelan
No. C36301
Exp. 6-30-06
CIVIL
STATE OF CALIFORNIA

The State of California or its officers or agents shall not be responsible for the accuracy or completeness of electronic copies of this plan sheet.

To get to the Caltrans web site, go to: http://www.dot.ca.gov

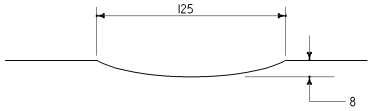

SECTION A-A

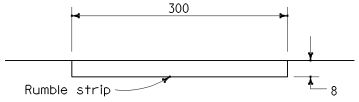

SECTION B-B

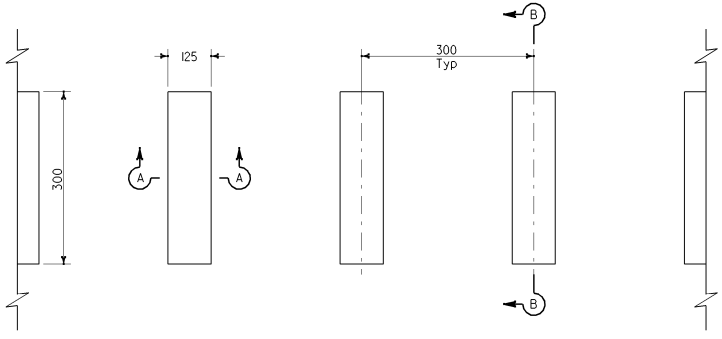

PLAN
GROUND-IN INDENTATIONS

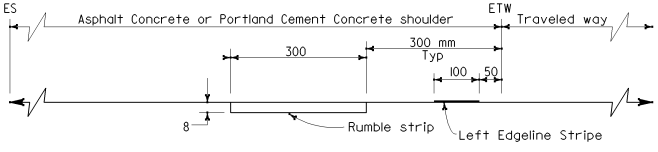

RUMBLE STRIP PLACEMENT
LEFT OF DIRECTION OF TRAVEL

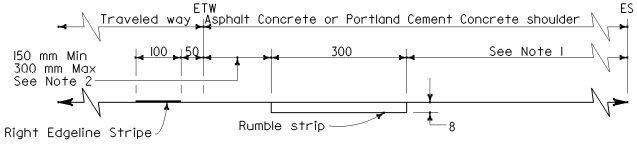

RUMBLE STRIP PLACEMENT
RIGHT OF DIRECTION OF TRAVEL

TYPICAL GROUND-IN RUMBLE STRIP
SHOULDER PLACEMENT

NOTES:

1. Where bicycles are permitted, shoulder rumble strips should not be used right of direction of travel unless a minimum of 1.5 meters of clear shoulder width for bicycle use is available between the rumble strip and the outer edge of the shoulder. Where bicycles are not permitted, a minimum of 1.2 meters of distance is required between the rumble strip and the outer edge of the shoulder.

2. Unless otherwise shown on the plans or specified in the special provisions, the 150 mm offset from the edge of traveled way to the edge of the rumble strip shall be used for rumble strip placement right of the direction of travel.

STATE OF CALIFORNIA
DEPARTMENT OF TRANSPORTATION

SHOULDER RUMBLE STRIP DETAILS
GROUND-IN INDENTATIONS

NO SCALE

ALL DIMENSIONS ARE IN MILLIMETERS UNLESS OTHERWISE SHOWN

A40B

05-13-04

2004 Std PLAN A40B

Back to Table of Contents

DIST	COUNTY	ROUTE	KILOMETER POST TOTAL PROJECT	SHEET NO.	TOTAL SHEETS

Dallas Forester
REGISTERED CIVIL ENGINEER

July 1, 2004
PLANS APPROVAL DATE

REGISTERED PROFESSIONAL ENGINEER Dallas Forester No. C37765 Exp. 12-31-04 CIVIL STATE OF CALIFORNIA

The State of California or its officers or agents shall not be responsible for the accuracy or completeness of electronic copies of this plan sheet.

To get to the Caltrans web site, go to: http://www.dot.ca.gov

Caltrans Metric

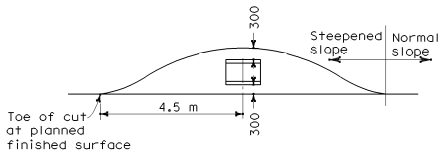

PLAN
See Note 2

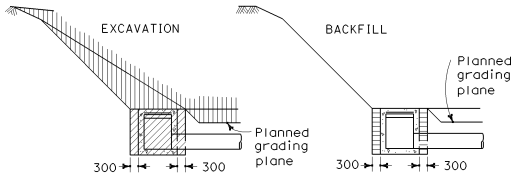

SECTION
RECESSES AT DRAINAGE INLETS

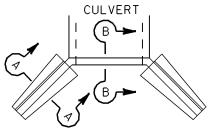

PLAN OF WING WALL

SECTION A-A

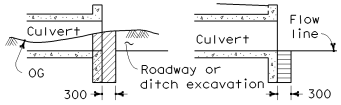

SECTION B-B
WING WALLS

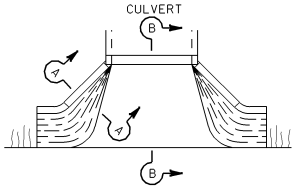

PLAN OF WRARPED WING WALL

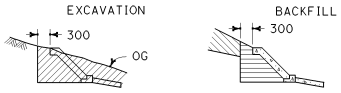

SECTION A-A

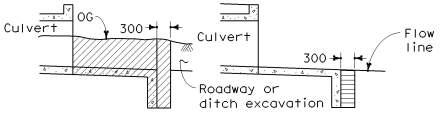

SECTION B-B
WARPED WING WALLS

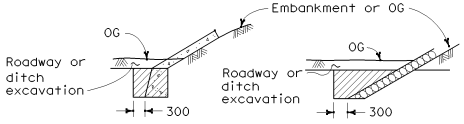

SLOPE PROTECTION
See Note 3

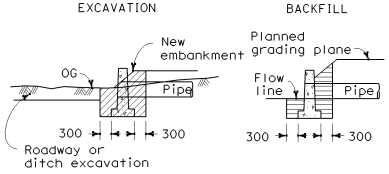

PIPE HEADWALLS

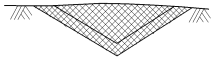

PAVED OR LINED DITCH

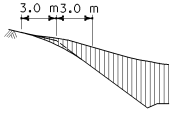

SLOPE ROUNDING

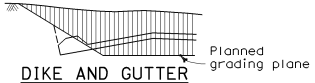

DIKE AND GUTTER

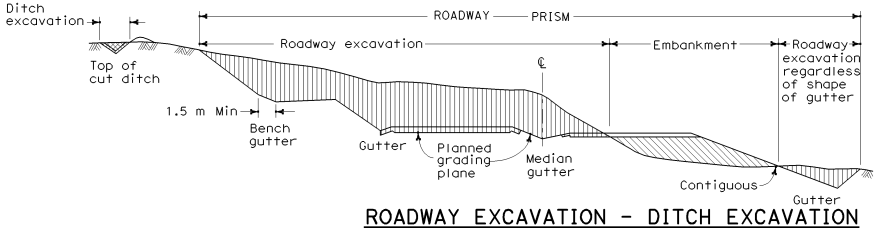

ROADWAY EXCAVATION - DITCH EXCAVATION

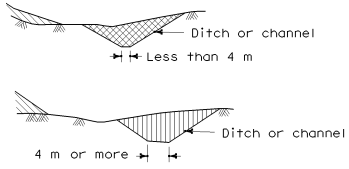

NOTES

1. This drawing indicates the work to be done and limits of payment for:
   - Roadway Excavation
   - Ditch Excavation
   - Structure Excavation for Slope Protection
2. Slopes and dimensions may vary to fit field conditions.
3. Top limit of structure excavation is original ground if ditch is not excavated.

LEGEND

- Structure Excavation
- Structure Backfill
- Ditch Excavation
- Slope Protection
- Roadway Excavation
- Roadway Embankment
- Original Ground

STATE OF CALIFORNIA
DEPARTMENT OF TRANSPORTATION

EXCAVATION AND BACKFILL MISCELLANEOUS DETAILS

NO SCALE

ALL DIMENSIONS ARE IN MILLIMETERS UNLESS OTHERWISE SHOWN

A62A

04-30-04

Back to Table of Contents

DIST	COUNTY	ROUTE	KILOMETER POST TOTAL PROJECT	SHEET NO.	TOTAL SHEETS

Caltrans Metric

REGISTERED CIVIL ENGINEER

July 1, 2004
PLANS APPROVAL DATE

REGISTERED PROFESSIONAL ENGINEER Overcomer Y. Hor No. 45803 Exp. 12-31-06 CIVIL STATE OF CALIFORNIA

The State of California or its officers or agents shall not be responsible for the accuracy or completeness of electronic copies of this plan sheet.

To get to the Caltrans web site, go to: http://www.dot.ca.gov

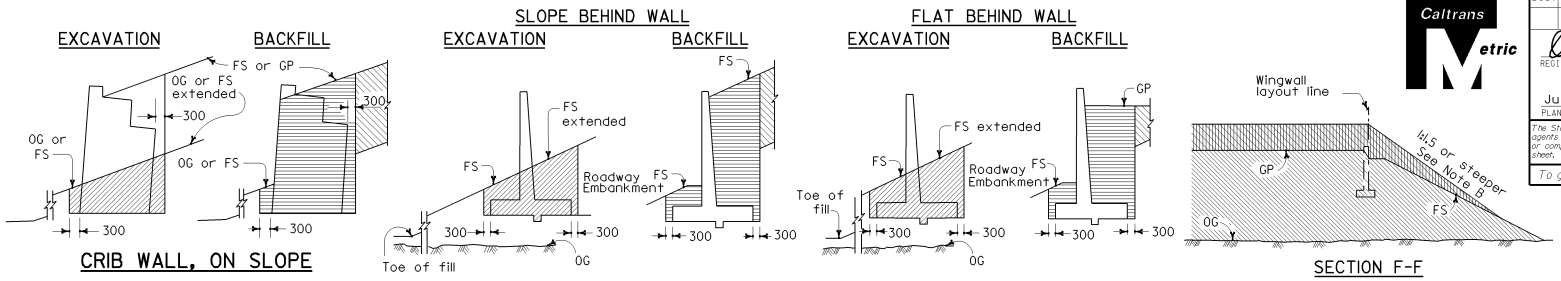

CRIB WALL, ON SLOPE

RETAINING WALL IN FILL, ON SLOPE

SECTION F-F

SURCHARGE NOTES

A. Bridge embankment surcharges to be placed at locations and to the heights listed in the special provisions.

B. Surcharge slopes to be as steep as stability of material permits.

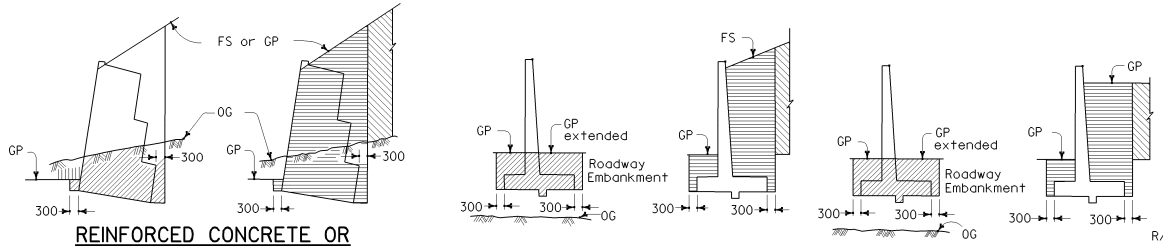

REINFORCED CONCRETE OR TIMBER CRIB WALL

RETAINING WALL IN FILL

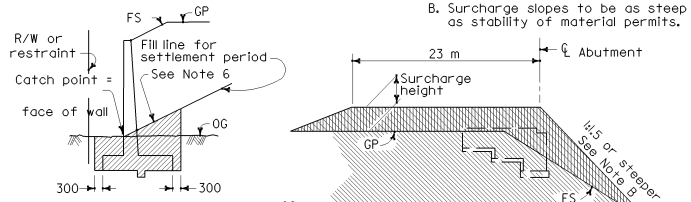

EXCAVATION

ELEVATION

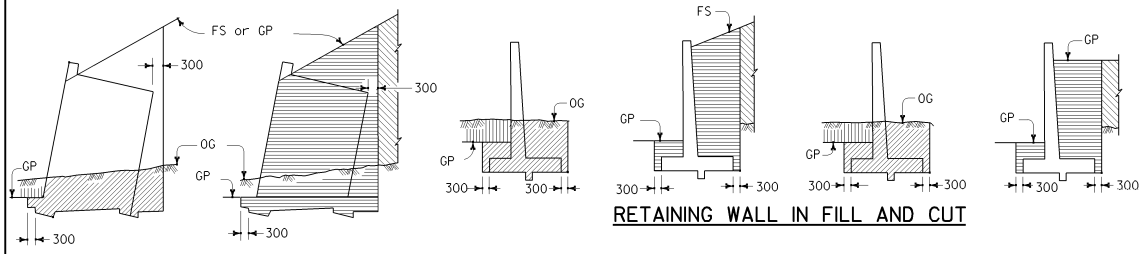

METAL CRIB WALL

RETAINING WALL IN FILL AND CUT

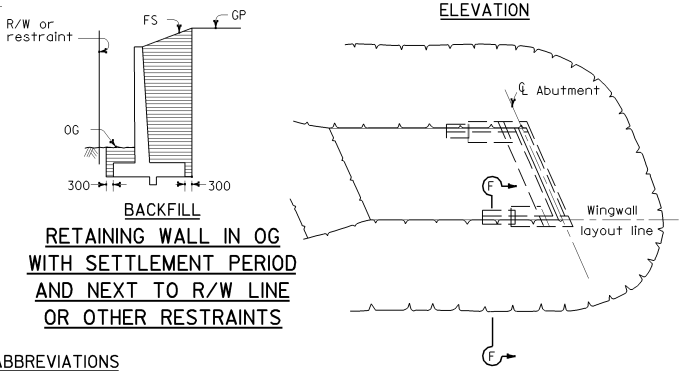

BACKFILL

RETAINING WALL IN OG WITH SETTLEMENT PERIOD AND NEXT TO R/W LINE OR OTHER RESTRAINTS

PLAN

BRIDGE EMBANKMENT SURCHARGE

NOTES

1. Roadway embankment is not delineated on excavation drawings for clarity.
2. Embankment, if any, must be in place before structure excavation is made.
3. If no roadway or ditch excavation or embankment is involved at the wall, structure excavation will be measured from the original ground.
4. No deduction for crib wall member volumes is made from structure backfill quantities.
5. When an embankment settlement period is required, the upper limits of structure excavation are raised to conform to the elevation of the embankment after the settlement period or, when an embankment surcharge is used to the finished surface and grading plane elevations.
6. Embankment slopes to be as steep as material permits. Slope assumed to be 1:1 for purposes of quantity calculations.

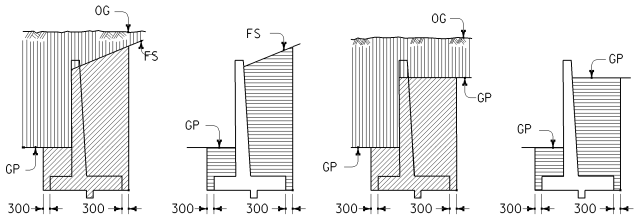

RETAINING WALL IN CUT

ABBREVIATIONS

OG - Original Ground
FS - Planned Finished Surface
GP - Planned Grading Plane

LEGEND

- Structure Excavation
- Structure Backfill
- Roadway Excavation
- Roadway Embankment
- Bridge Embankment Surcharge

STATE OF CALIFORNIA
DEPARTMENT OF TRANSPORTATION

LIMITS OF PAYMENT FOR EXCAVATION AND BACKFILL BRIDGE SURCHARGE AND WALL

NO SCALE

ALL DIMENSIONS ARE IN MILLIMETERS UNLESS OTHERWISE SHOWN

A62B

03-26-04

Back to Table of Contents

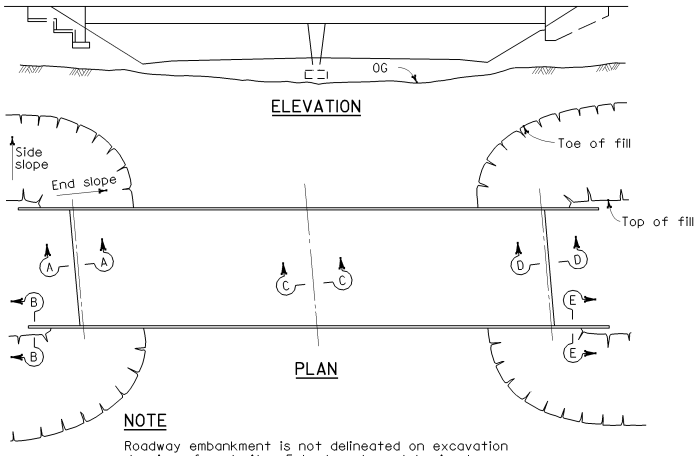

NOTE

Roadway embankment is not delineated on excavation drawings for clarity. Embankment must be in place before structure excavation is made.

IN FILL

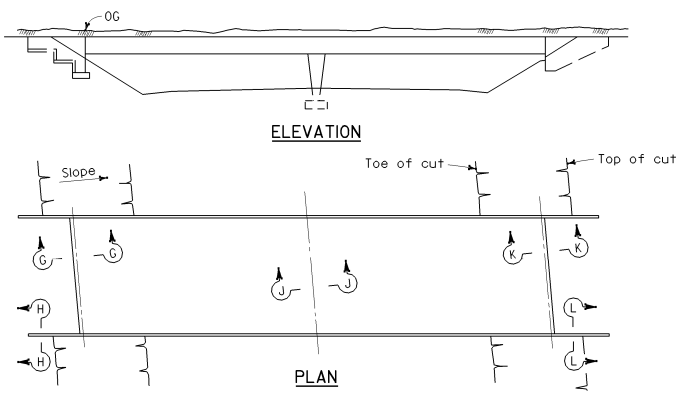

NOTE

If no roadway excavation is involved at bridge, structure excavation is measured from original ground.

IN CUT

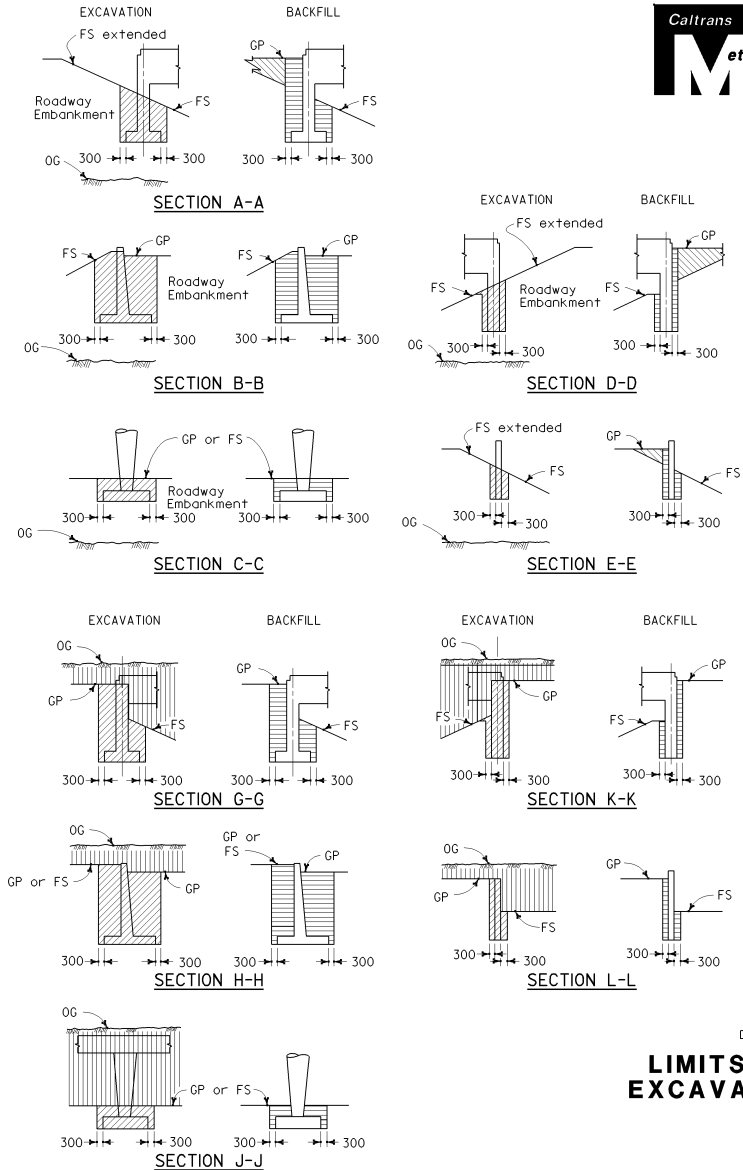

Caltrans Metric

DIST	COUNTY	ROUTE	KILOMETER POST TOTAL PROJECT	SHEET NO.	TOTAL SHEETS

REGISTERED CIVIL ENGINEER

July 1, 2004

PLANS APPROVAL DATE

REGISTERED PROFESSIONAL ENGINEER Overcomer Y. Hor No. 45803 Exp. 12-31-06 CIVIL STATE OF CALIFORNIA

The State of California or its officers or agents shall not be responsible for the accuracy or completeness of electronic copies of this plan sheet.

To get to the Caltrans web site, go to: http://www.dot.ca.gov

ABBREVIATIONS

OG	Original Ground
FS	Planned Finished Surface
GP	Planned Grading Plane

LEGEND

- Structure Excavation
- Structure Backfill
- Roadway Excavation
- Roadway Embankment

STATE OF CALIFORNIA
DEPARTMENT OF TRANSPORTATION

LIMITS OF PAYMENT FOR EXCAVATION AND BACKFILL BRIDGE

NO SCALE

ALL DIMENSIONS ARE IN MILLIMETERS UNLESS OTHERWISE SHOWN

A62C

03-26-04

Back to Table of Contents

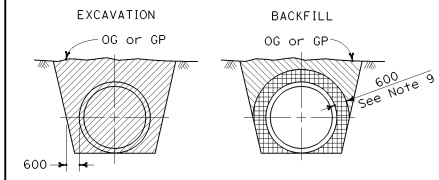

IN TRENCH

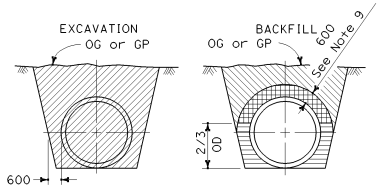

IN TRENCH

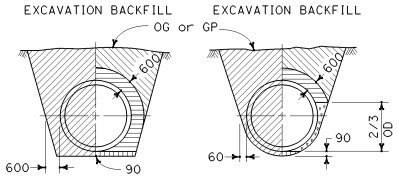

SAND BEDDING SOIL CEMENT BEDDING

IN TRENCH

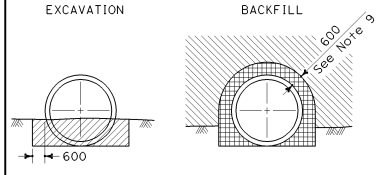

IN EMBANKMENT

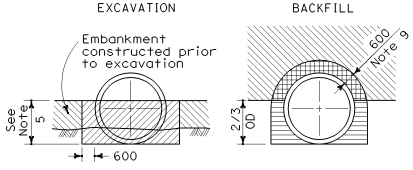

IN EMBANKMENT

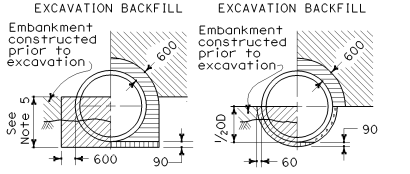

SAND BEDDING SOIL CEMENT BEDDING

A B

IN EMBANKMENT

MINIMUM ALLOWABLE CLASSES OF RCP FOR METHOD 1

Cover (in meters)	Minimum Class & D-Load
1.80	Class 11 50D
1.81 - 2.40	Class 111 65D
2.41 - 3.00	Class 111 Special 80D
3.01 - 3.60	Class 1V 100D
3.61 - 4.20	Class 1V Special 120D
4.21 - 5.10	Class V 140D
5.11 - 6.00	Class V Special 170D

See Notes 6 and 9

METHOD 1

MINIMUM ALLOWABLE CLASSES OF RCP FOR METHOD 2

Cover (in meters)	Minimum Class & D-Load
4.80	Class 11 50D
4.81 - 6.00	Class 111 65D
6.01 - 7.50	Class 111 Special 80D
7.51 - 8.50	Class 1V 100D
8.51 - 10.60	Class 1V Special 120D
10.61 - 12.80	Class V 140D
12.81 - 15.00	Class V Special 170D

See Notes 8 and 9

METHOD 2

REINFORCED CONCRETE PIPE

See Notes 1, 2, 7 and 10

MINIMUM ALLOWABLE CLASSES OF RCP FOR METHOD 3

Cover (in meters)	Minimum Class & D-Load
7.90	Class 11 50D
7.91 - 9.70	Class 111 65D
9.71 - 11.50	Class 111 Special 80D
11.51 - 13.70	Class 1V 100D
13.71 - 17.00	Class 1V Special 120D
17.01 - 20.70	Class V 140D
20.71 - 24.00	Class V Special 170D

METHOD 3

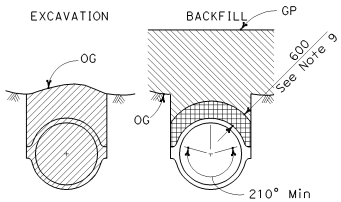

IN TRENCH ONLY

CAST-IN-PLACE

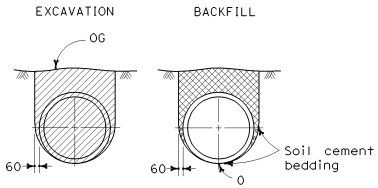

IN TRENCH ONLY

PRECAST

See Notes 7 and 11

NON-REINFORCED CONCRETE PIPE

LEGEND

- Structure Excavation (Culvert)
- Structure Backfill (Culvert) 95% relative compaction
- Structure Backfill (Culvert) 90% relative compaction
- Loose Backfill
- Sand Bedding
- Soil Cement Bedding
- Roadway Embankment
- Original Ground

OD = Outside diameter for circular pipes and maximum vertical dimension for other shapes

ID = Inside diameter for circular pipes and minimum vertical dimension for other shapes

RCP = Reinforced concrete pipe

Caltrans Metric

DIST	COUNTY	ROUTE	KILOMETER POST TOTAL PROJECT	SHEET NO.	TOTAL SHEETS

REGISTERED CIVIL ENGINEER

July 1, 2004

PLANS APPROVAL DATE

REGISTERED PROFESSIONAL ENGINEER Dallas Forester No. C37765 Exp. 12-31-04 CIVIL STATE OF CALIFORNIA

The State of California or its officers or agents shall not be responsible for the accuracy or completeness of electronic copies of this plan sheet.

To get to the Caltrans web site, go to: http://www.dot.ca.gov

NOTES

1. Unless otherwise shown on the plans or specified in the special provisions, the Contractor shall have the option of selecting the class of RCP and the method of backfill to be used, provided the height of cover does not exceed the value shown for the RCP selected.
   Example:
   600 mm RCP culvert with maximum cover of 5.80 m the options are:
   a) Class V Special or stronger with Method 1.
   b) Class 111 or stronger with Method 2.
   c) Class 11 or stronger with Method 3.
   Cover is defined as the maximum vertical distance from top of pipe to finished grade within the length of any given culvert.
2. The class of RCP, method of backfill and bedding selected shall be the same throughout the length of any given culvert.
3. The ``length of any culvert'' is defined as the culvert between:
   a) Successive drainage structures (inlets, junction boxes, headwalls, etc.).
   b) A drainage structure and the inlet or outlet end of the culvert.
   c) The inlet and outlet end of the culvert when there are no intervening drainage structures.
4. Slope or shore excavation sides as necessary.
5. Embankment height prior to excavation for installation of all classes of RCP under Methods 2 and 3A shall be as follows:
   Pipe sizes 300 mm to 1050 mm I D = 750 mm
   Pipe sizes 1200 mm to 2100 mm I D = 2/3 OD
   Pipe sizes larger than 2100 mm I D = 1500 mm
6. The maximum size for all classes of RCP placed under Method 1 is 1950 mm ID.
7. Non-reinforced precast pipe sizes 900 mm or smaller may also be placed under Methods 1, 2 or 3.
8. Oval or arch shaped RCP shall be placed under Method 2 only.
9. Embankment compaction requirements govern over the 90% relative compaction backfill requirement within 750 mm of finished grade.
10. Backfill shall be placed full width of excavation except where dimensions are shown for backfill width or thickness. Dimensions shown are minimums.
11. Where the precast non-reinforced concrete pipe is used as a substitute for the cast-in-place pipe, both the wall thickness and the concrete strength shall be at least as great as that specified for the cast-in-place pipe. The fill height allowed shall not exceed that shown for the cast-in-place pipe.

STATE OF CALIFORNIA
DEPARTMENT OF TRANSPORTATION

EXCAVATION AND BACKFILL CONCRETE PIPE CULVERTS

NO SCALE

ALL DIMENSIONS ARE IN MILLIMETERS UNLESS OTHERWISE SHOWN

A62D

04-01-04

Back to Table of Contents

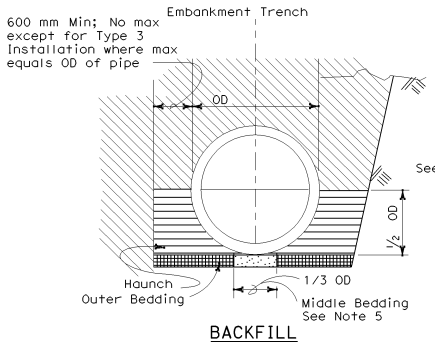

BACKFILL

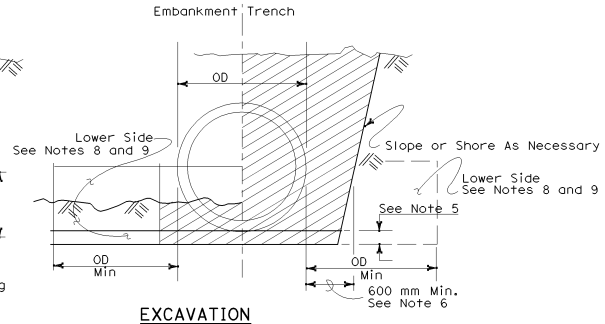

EXCAVATION

Roadway Embankment

Structure Backfill (Culvert) See Note 6

Structure Backfill (Culvert) See Note 6

Loose Backfill

Excavation Structure (Culvert)

OD - Outside diameter of pipe
RCP - Reinforced concrete pipe

TYPE 1 INSTALLATION:

The haunch and outer bedding shall be compacted to a minimum 90 percent relative compaction. In addition, the minimum sand equivalent in these areas shall be 30 and the maximum percentage passing the 75 μm sieve size shall be 12.

TYPE 2 INSTALLATION:

The haunch and outer bedding shall be compacted to a minimum 90 percent relative compaction. In addition, the minimum sand equivalent in these areas shall be 25.

TYPE 3 INSTALLATION:

The haunch and outer bedding shall be compacted to a minimum 85 percent relative compaction. 90 percent relative compaction will be required where the fill over the pipe is less than 1.2 meters or ½ OD.

INSTALLATION TYPE 1

MINIMUM CLASS AND D-LOAD	COVER (IN METERS)	
	2700 DIA. AND SMALLER	OVER 2700 DIA
Class II 50D	4.50	4.00
Class III 65D	4.51 - 6.40	4.01 - 5.80
Class III Special 80D	6.41 - 8.20	5.81 - 7.60
Class IV 100D	8.21 - 9.70	7.61 - 9.10
Class IV Special 120D	9.71 - 12.50	9.11 - 11.90
Class V 140D	12.51 - 15.20	11.91 - 14.30
Class V Special 170D	15.21 - 18.00	14.31 - 17.70

INSTALLATION TYPE 2

MINIMUM CLASS AND D-LOAD	COVER (IN METERS)
Class II 50D	3.00
Class III 65D	3.01 - 4.60
Class III Special 80D	4.61 - 6.10
Class IV 100D	6.11 - 7.60
Class IV Special 120D	7.61 - 9.80
Class V 140D	9.81 - 11.90
Class V Special 170D	11.91 - 14.30

INSTALLATION TYPE 3

MINIMUM CLASS AND D-LOAD	COVER (IN METERS)	
	1200 DIA. AND SMALLER	OVER 1200 DIA
Class II 50D	2.40	1.80
Class III 65D	2.41 - 3.40	1.81 - 2.70
Class III Special 80D	3.41 - 4.60	2.71 - 4.00
Class IV 100D	4.61 - 5.50	4.01 - 4.90
Class IV Special 120D	5.51 - 6.70	4.91 - 6.10
Class V 140D	6.71 - 8.20	6.11 - 7.60
Class V Special 170D	8.21 - 10.00	7.61 - 9.50

Caltrans Metric

DIST	COUNTY	ROUTE	KILOMETER POST TOTAL PROJECT	SHEET NO.	TOTAL SHEETS

REGISTERED CIVIL ENGINEER

July 1, 2004
PLANS APPROVAL DATE

REGISTERED PROFESSIONAL ENGINEER Dallas Forester No. C37765 Exp. 12-31-04 CIVIL STATE OF CALIFORNIA

The State of California or its officers or agents shall not be responsible for the accuracy or completeness of electronic copies of this plan sheet.

To get to the Caltrans web site, go to: http://www.dot.ca.gov

NOTES:

1. Unless otherwise shown on the plans or specified in the special provision, the Contractor shall have the option of selecting the class of RCP and the type of installation to be used, provided the height of cover does not exceed the value shown for the RCP selected.
   Example: 600 mm RCP culvert with maximum cover of 5.80 m the options are:
   a) Class III or stronger with Installation Type 1.
   b) Class III Special or stronger with Installation Type 2.
   c) Class IV Special or stronger with Installation Type 3.
   Cover is defined as the maximum vertical distance from top of the pipe to finished grade within the length of any given culvert.
2. The class of RCP and Installation Type selected shall be the same throughout the length of any given culvert.
3. The "length of any culvert" is defined as the culvert between:
   a) Successive drainage structure (inlets, junction boxes, headwalls, etc.).
   b) A drainage structure and the inlet or outlet end of the culvert.
   c) The inlet and outlet end of the culvert when there are no intervening drainage structures.
4. Oval and arch shaped RCP shall not be used.
5. 1/25 OD min, not less than 75 mm.
6. Slurry cement backfill may be substituted for backfill in the outer bedding and haunch areas. If slurry is used the outer and middle beddings shall be omitted. Prior to installation the soil under the middle 1/3 of the outside diameter of the pipe shall be softened by scarifying or other means to a minimum depth of 1/25 OD, but not less than 75 mm. Where slurry cement backfill is used clear distance to trench wall may be reduced as set forth in Section 19-3.062 of the Standard Specifications.
7. Backfill shall be placed full width of excavation except where dimensions are shown for backfill width or thickness. Dimensions shown are minimums.
8. Lower side shall be suitable material as determined by the Engineer. Otherwise it shall be considered unsuitable as set forth in Section 19-2.02 of the Standard Specifications. See Note 9.
9. Where the pipe is placed in a trench, if the trench walls are sloped at 5 vertical to 1 horizontal or steeper for at least 90 percent of the trench height or up to not less than 300 mm from the grading plane, the firmness of the soil in the lower side need not be considered.
10. Non-reinforced precast concrete pipe sizes 900 mm or smaller may be placed under installation Types 1, 2 or 3.

STATE OF CALIFORNIA
DEPARTMENT OF TRANSPORTATION

EXCAVATION AND BACKFILL CONCRETE PIPE CULVERTS

NO SCALE

ALL DIMENSIONS ARE IN MILLIMETERS UNLESS OTHERWISE SHOWN

A62DA

2004 Std PLAN A62DA

04-20-04

Back to Table of Contents

DIST	COUNTY	ROUTE	KILOMETER POST TOTAL PROJECT	SHEET NO.	TOTAL SHEETS

Caltrans Metric

REGISTERED CIVIL ENGINEER

July 1, 2004
PLANS APPROVAL DATE

REGISTERED PROFESSIONAL ENGINEER Dallas Forester No. C37765 Exp. 12-31-04 CIVIL STATE OF CALIFORNIA

The State of California or its officers or agents shall not be responsible for the accuracy or completeness of electronic copies of this plan sheet.

To get to the Caltrans web site, go to: http://www.dot.ca.gov

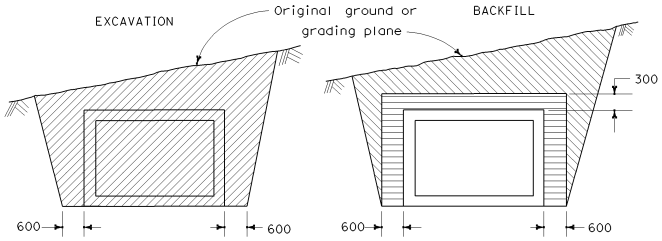

IN TRENCH

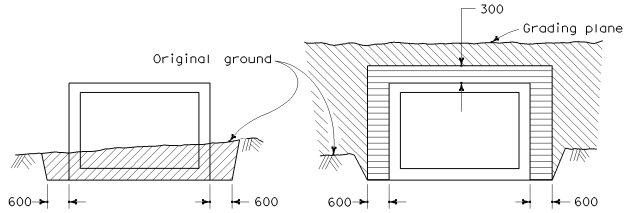

IN EMBANKMENT

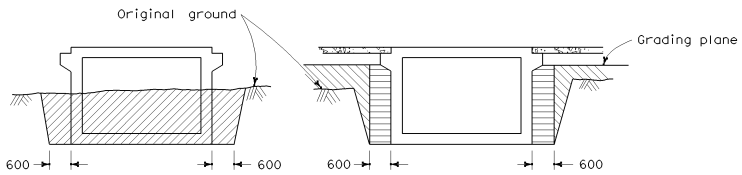

EXPOSED TOP

REINFORCED CONCRETE BOX CULVERT

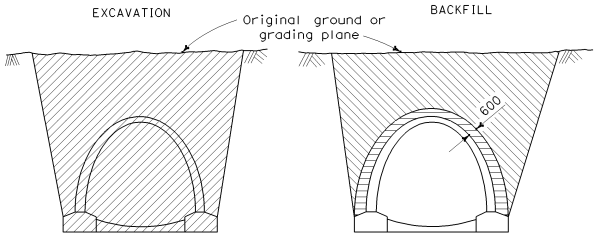

IN TRENCH

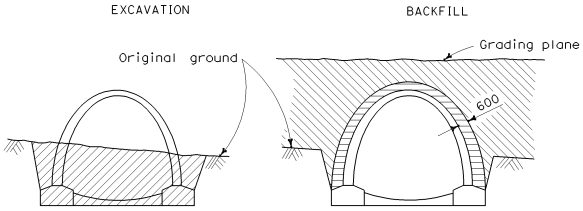

IN EMBANKMENT

REINFORCED CONCRETE ARCH CULVERT

NOTES

1. Slope or shore excavation sides as necessary.
2. Dimensions shown are minimum.

LEGEND

- Structure Excavation (Culvert)
- Structure Backfill (Culvert) 95% relative compaction
- Roadway Embankment
- Original Ground

STATE OF CALIFORNIA
DEPARTMENT OF TRANSPORTATION

EXCAVATION AND BACKFILL CAST-IN-PLACE REINFORCED CONCRETE BOX AND ARCH CULVERTS

NO SCALE

ALL DIMENSIONS ARE IN MILLIMETERS UNLESS OTHERWISE SHOWN

A62E

2004 Std PLAN A62E

04-01-04

Back to Table of Contents

DIST	COUNTY	ROUTE	KILOMETER POST TOTAL PROJECT	SHEET NO.	TOTAL SHEETS

REGISTERED CIVIL ENGINEER

July 1, 2004
PLANS APPROVAL DATE

REGISTERED PROFESSIONAL ENGINEER Dallas Forester No. C37765 Exp. 12-31-04 CIVIL STATE OF CALIFORNIA

The State of California or its officers or agents shall not be responsible for the accuracy or completeness of electronic copies of this plan sheet.

To get to the Caltrans web site, go to: http://www.dot.ca.gov

Caltrans Metric

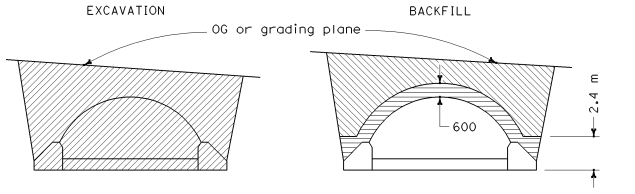

IN TRENCH

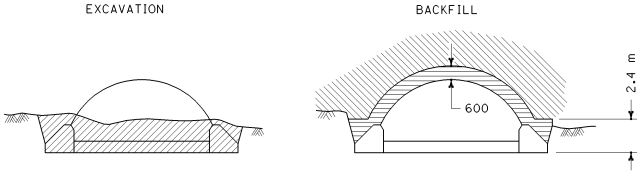

IN EMBANKMENT

STRUCTURAL STEEL PLATE ARCHES

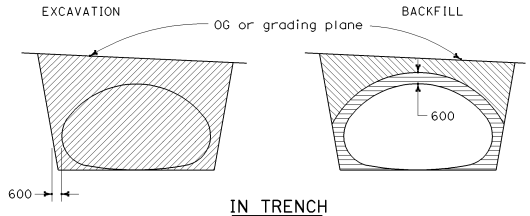

IN TRENCH

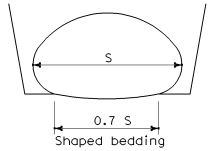

SHAPED BEDDING

S = Larger than 2100 mm

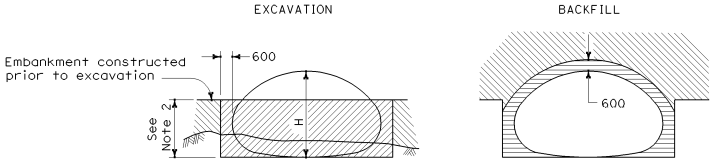

IN EMBANKMENT

STRUCTURAL STEEL PLATE PIPE ARCHES AND VEHICULAR UNDERCROSSING

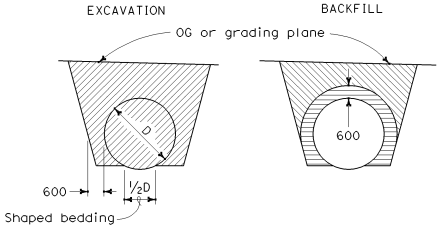

IN TRENCH

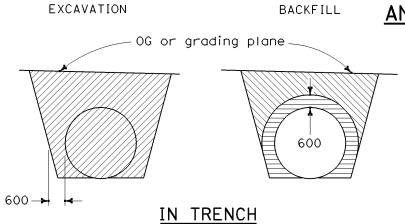

IN TRENCH

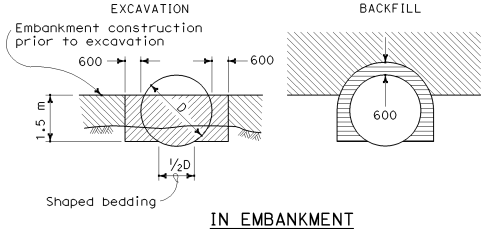

IN EMBANKMENT

PIPES

Larger than 2100 mm

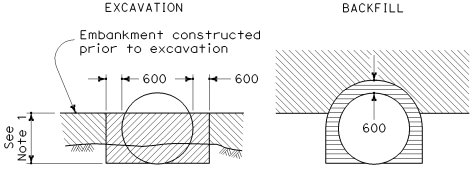

IN EMBANKMENT

METAL AND PLASTIC PIPES AND CORRUGATED METAL PIPE ARCHES

2100 mm or Smaller

NOTES

1. PIPES: 750 mm minimum for diameters up to and including 1050 mm then 2/3 diameter but no more than 1500 mm required. CORRUGATED METAL PIPE ARCHES: 750 mm maximum.
2. 2/3 H up to 1500 mm maximum.
3. Slope or shore excavation sides as necessary.
4. Backfill shall be placed full width of excavation except as noted.
5. Diagrams do not apply to overside drains.
6. Dimensions shown are minimum.
7. For strutting requirement of structural steel plate pipe, arches and vehicular undercrossing during construction, see Standard Plan D88A.

LEGEND

- Structure Excavation (Culvert)
- Structure Backfill (Culvert) 95% Relative Compaction
- Roadway Embankment
- Original ground

STATE OF CALIFORNIA
DEPARTMENT OF TRANSPORTATION

EXCAVATION AND BACKFILL METAL AND PLASTIC CULVERTS

NO SCALE

ALL DIMENSIONS ARE IN MILLIMETERS UNLESS OTHERWISE SHOWN

A62F

2004 Std PLAN A62F

04-01-04

Back to Table of Contents

DIST	COUNTY	ROUTE	KILOMETER POST TOTAL PROJECT	SHEET NO.	TOTAL SHEETS

Caltrans Metric

REGISTERED CIVIL ENGINEER

July 1, 2004
PLANS APPROVAL DATE

REGISTERED PROFESSIONAL ENGINEER Ellis K. Hirst No. C17926 Exp. 6-30-05 CIVIL STATE OF CALIFORNIA

The State of California or its officers or agents shall not be responsible for the accuracy or completeness of electronic copies of this plan sheet.

To get to the Caltrans web site, go to: http://www.dot.ca.gov

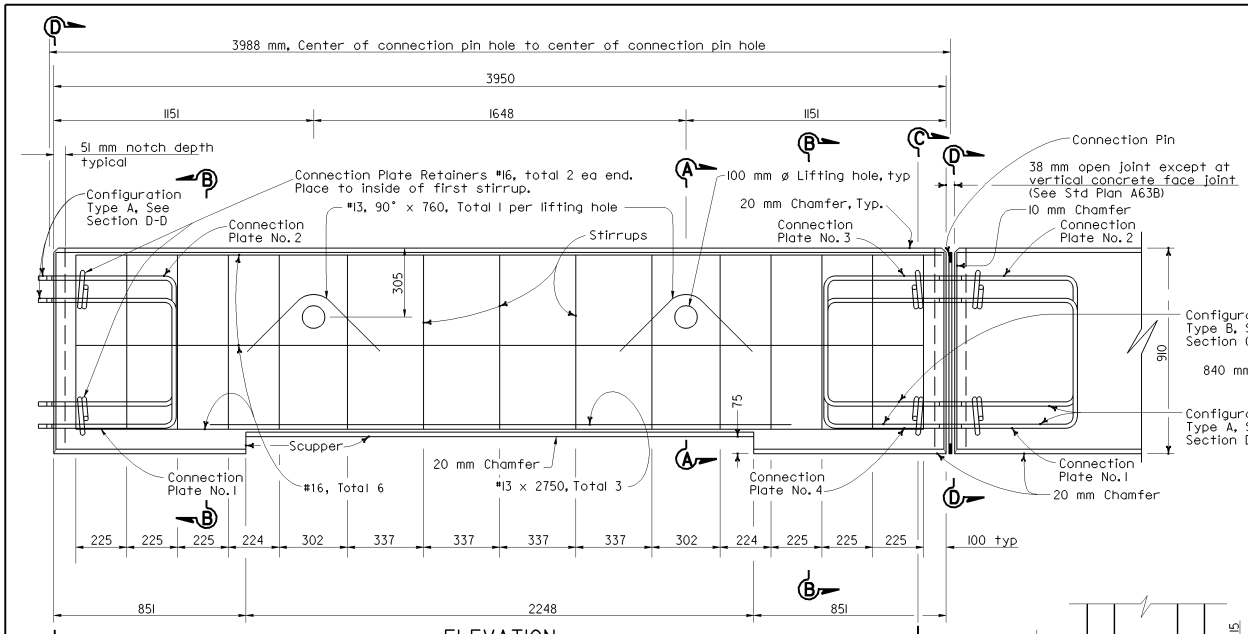

ELEVATION
'N' PANEL
(See Note 1)

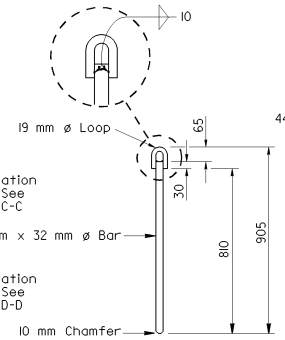

ELEVATION
CONNECTION PIN

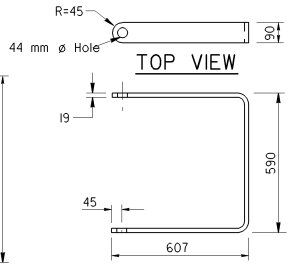

TOP VIEW

SIDE VIEW
CONNECTION PLATE

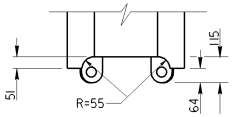

SECTION E-E
Notched Concrete Panel End

NOTES

1. Portable concrete barrier (Type 60K) consist of a layout of interconnected precast panels of the following types:

   "N" Panels - Notched concrete end at both ends of panel. Majority of panels used for portable (Type 60K) barrier are "N" Panels.

   "T" Panels - Notched concrete end at one end of the panel and a vertical concrete face at the other end of the panel. Used to connect "N" Panels to the "R" Panels.

   "R" Panels - Vertical concrete face at both ends of the panel. Used between "T" Panels. Also connects to vertical concrete end of "T" Panels and vertical concrete end of the connection to permanent concrete barrier.

   For Details of "T" and "R" Panels and Typical layouts of portable concrete barrier (Type 60K), see Standard Plan A63B.

2. Connection Plate Configurations Type A and Type B apply to "N", "T" and "R" Panels. The ends of Connection Plate No. 3 overlap the ends of Connection Plate No. 1. The ends of Connection Plate No. 4 overlap the ends of Connection Plate No. 2. One connection pin inserted through the holes in Connection Plates No. 3 and No. 1 and the other connection pin inserted through the holes in Connection Plates No. 4 and No. 2.

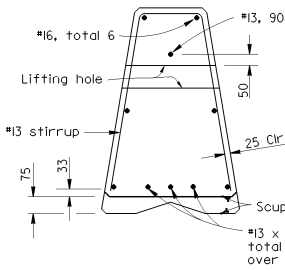

SECTION A-A

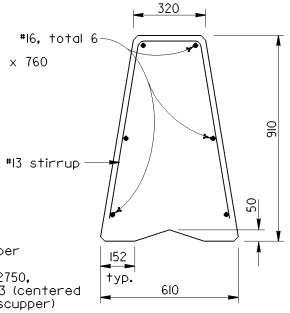

SECTION B-B

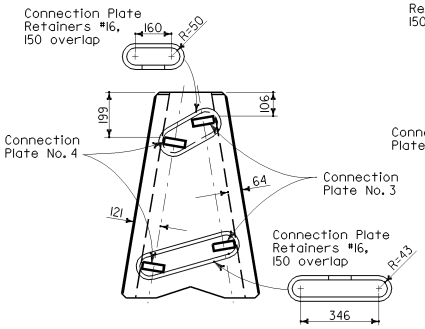

SECTION C-C
Connection Plate Configuration Type B
(See Note 2)

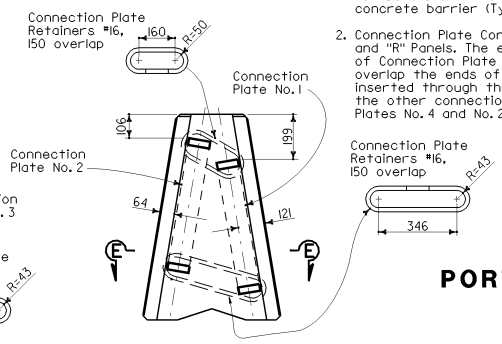

SECTION D-D
Connection Plate Configuration Type A
(See Note 2)

STATE OF CALIFORNIA
DEPARTMENT OF TRANSPORTATION

PORTABLE CONCRETE BARRIER (TYPE 60K)

NO SCALE

ALL DIMENSIONS ARE IN MILLIMETERS UNLESS OTHERWISE SHOWN

A63A

06-08-04

Back to Table of Contents

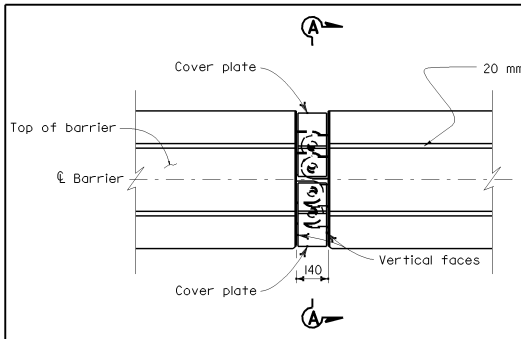

Connection pins not shown in this view.

TOP VIEW

VERTICAL CONCRETE FACE JOINTS

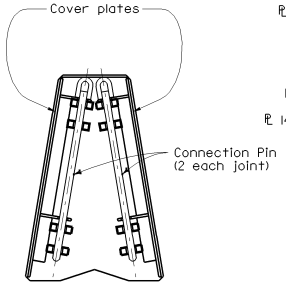

SECTION A-A

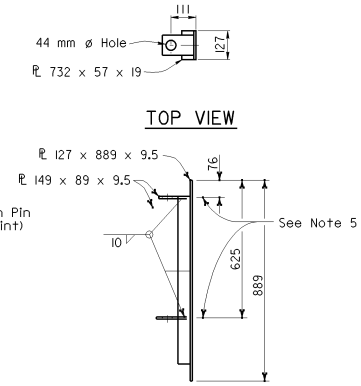

SIDE VIEW

COVER PLATE

Caltrans Metric

DIST	COUNTY	ROUTE	KILOMETER POST TOTAL PROJECT	SHEET NO.	TOTAL SHEETS

REGISTERED CIVIL ENGINEER

July 1, 2004
PLANS APPROVAL DATE

REGISTERED PROFESSIONAL ENGINEER Ellis K. Hirst No. C17926 Exp. 6-30-05 CIVIL STATE OF CALIFORNIA

The State of California or its officers or agents shall not be responsible for the accuracy or completeness of electronic copies of this plan sheet.

To get to the Caltrans web site, go to: http://www.dot.ca.gov

NOTES

1. "R" Panels are to be placed at a maximum of 10 panel segment intervals and at connections to permanent concrete barrier. "R" panels provide for quick and easy placement and removal by lateral movement of panel (NO Notched Ends). "N" Panels have concrete notches at each end of the panel. "T" panels have a concrete notch at one end of the panel and a vertical face at the other end of the panel. Notched end connections plus overlapping connection plates require longitudinal movement of the panels during placement or removal. If portable concrete barrier (Type 60K) is to be removed after installation, "R" panels are to be removed first to facilitate removal of the remaining panels.
2. Reinforcement and dimensioning details for "R" and "T" Panels are similar to the "N" Panel details shown on Standard Plan A63A.
3. Modify end of permanent concrete barrier with the installation of connection plates for connection pins and cover plates. Remove 600 mm of existing Type 60 permanent concrete barrier to install connection plates for "R" Panel connection. Where the connection to existing barrier requires a height transition, remove existing barrier to end of the height transition.
4. All metal plates to be galvanized after fabrication.
5. Dimension to bottom of the 732 x 57 x 19 plate.
6. The minimum radius of curve for horizontal alignment of portable concrete barrier (Type 60K) is 50 meters.
7. For additional details of connection plate configurations, see Sections C-C and D-D of Standard Plan A63A.

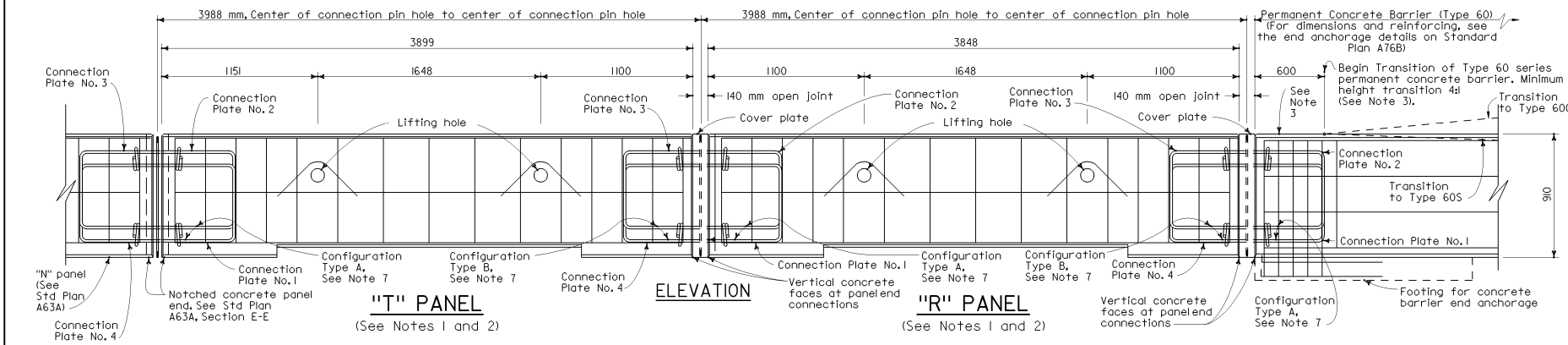

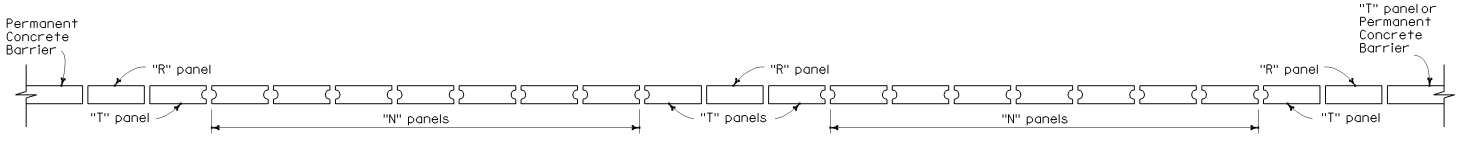

PLAN

TYPICAL PORTABLE CONCRETE BARRIER (TYPE 60K) LAYOUT

See Notes 1 and 6

STATE OF CALIFORNIA
DEPARTMENT OF TRANSPORTATION

PORTABLE CONCRETE BARRIER (TYPE 60K)

NO SCALE

ALL DIMENSIONS ARE IN MILLIMETERS UNLESS OTHERWISE SHOWN

A63B

06-07-04

Back to Table of Contents

DIST	COUNTY	ROUTE	KILOMETER POST TOTAL PROJECT	SHEET NO.	TOTAL SHEETS

Caltrans Metric

REGISTERED CIVIL ENGINEER

July 1, 2004
PLANS APPROVAL DATE

REGISTERED PROFESSIONAL ENGINEER Greg W. Edwards No. C36386 Exp. 6-30-06 CIVIL STATE OF CALIFORNIA

The State of California or its officers or agents shall not be responsible for the accuracy or completeness of electronic copies of this plan sheet.

To get to the Caltrans web site, go to: http://www.dot.ca.gov

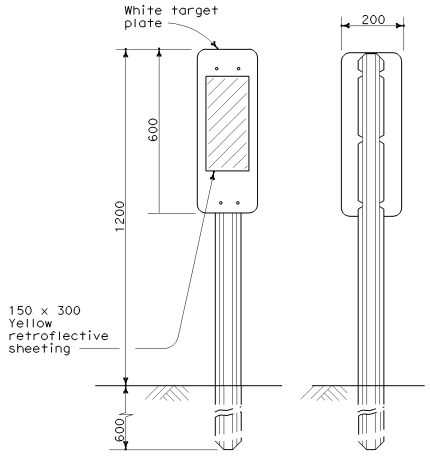

FRONT BACK

TYPE L-1

See Note 1

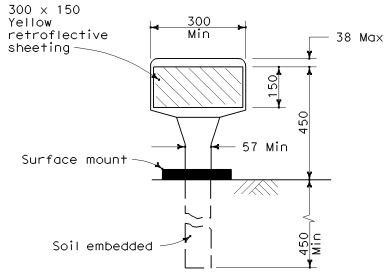

TYPE K-1

(Flexible post with horizonal orientation of sheeting)

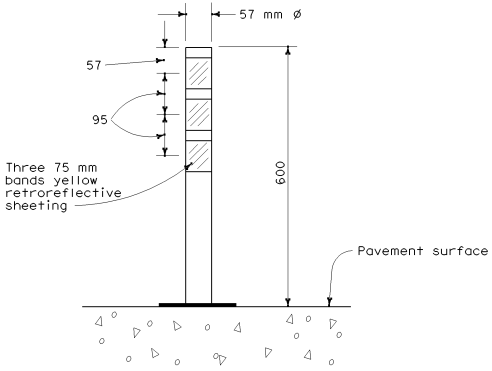

TYPE Q

(Tubular flexible post surface mount)

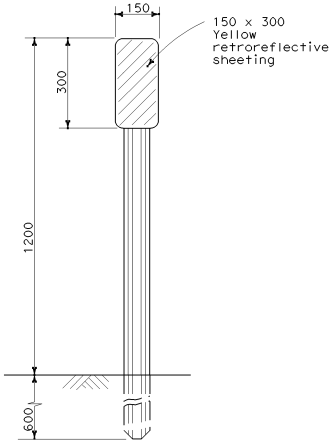

TYPE L-2

See Note 1

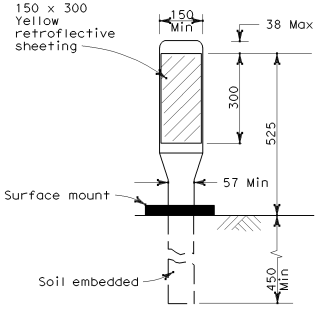

TYPE K-2

(Flexible post with vertical orientation of sheeting)

NOTE

1. See Standard Plan A73B for metal post details and additional markers.

STATE OF CALIFORNIA
DEPARTMENT OF TRANSPORTATION

OBJECT MARKERS

NO SCALE

ALL DIMENSIONS ARE IN MILLIMETERS UNLESS OTHERWISE SHOWN

A73A

2004 Std PLAN A73A

04-09-04

Back to Table of Contents

DIST	COUNTY	ROUTE	KILOMETER POST TOTAL PROJECT	SHEET NO.	TOTAL SHEETS

REGISTERED CIVIL ENGINEER

July 1, 2004
PLANS APPROVAL DATE

REGISTERED PROFESSIONAL ENGINEER Greg W. Edwards No. C36386 Exp. 6-30-06 CIVIL STATE OF CALIFORNIA

The State of California or its officers or agents shall not be responsible for the accuracy or completeness of electronic copies of this plan sheet.

To get to the Caltrans web site, go to: http://www.dot.ca.gov

Caltrans Metric

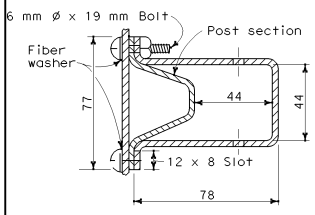

TOP VIEW

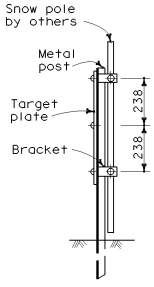

POST SIDE VIEW

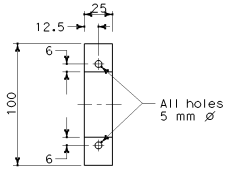

SIDE VIEW

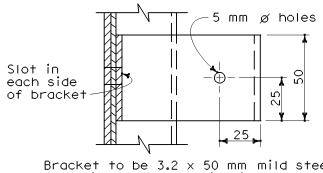

Bracket to be 3.2 x 50 mm mild steel galvanized after fabrication

SIDE VIEW

SNOW POLE BRACKET

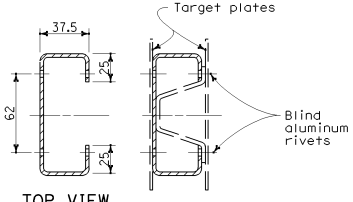

TOP VIEW

Material:
Aluminum 1.25 mm thick
(3003-H14 Alloy)

TWO PLATE POST MOUNT

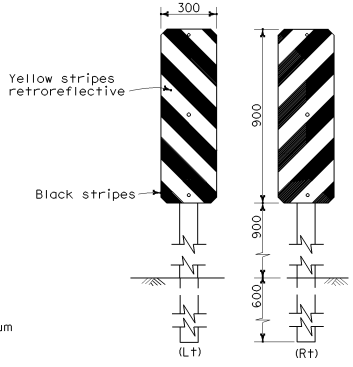

TYPE P

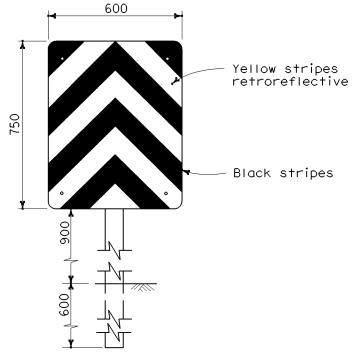

TYPE R

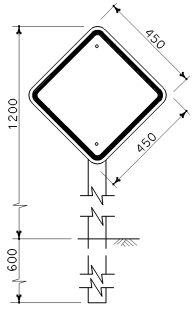

TYPE N-1, N-2, N-3

N-1. Yellow retroreflective background with black border.
N-2. Red retroreflective background with black border.
N-3. Orange retroreflective background with black border.

OBJECT MARKERS

NOTES

1. See Standard Plan A73A for additional object markers.
2. Type P and R markers shall have orange and white retroreflective stripes in work zones.

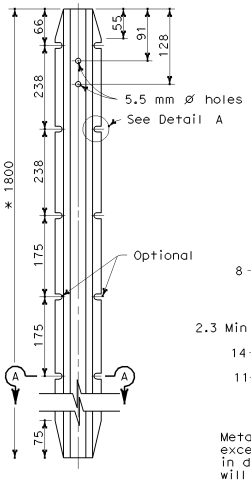

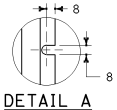

DETAIL A

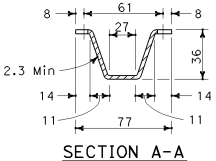

SECTION A-A

Metal post to be as shown except that minor variations in design and dimensions will be permitted to meet manufacturer's standards.

* 2400 mm for Type P object marker

METAL POST DETAIL

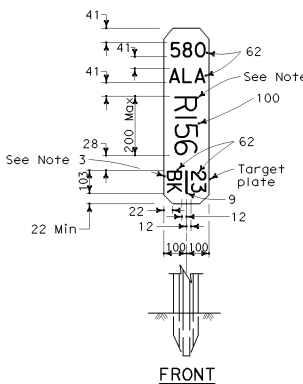

FRONT

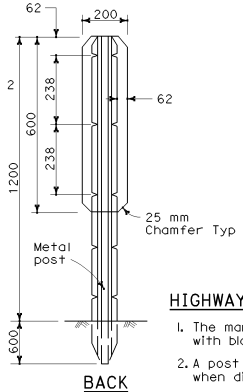

BACK

HIGHWAY POST MARKER

HIGHWAY POST MARKER NOTES

1. The marker shall be white (non-reflective) target plate with black Series D numerals and letters.
2. A post mile prefix, such as "R", shall apply only when directed by the Engineer.
3. "BK" (Back), "AH" (Ahead), or a blank space shall apply as directed by the Engineer.
4. All information shall be in English units (miles).

STATE OF CALIFORNIA
DEPARTMENT OF TRANSPORTATION

MARKERS

NO SCALE

ALL DIMENSIONS ARE IN MILLIMETERS UNLESS OTHERWISE SHOWN

A73B

04-09-04

Back to Table of Contents

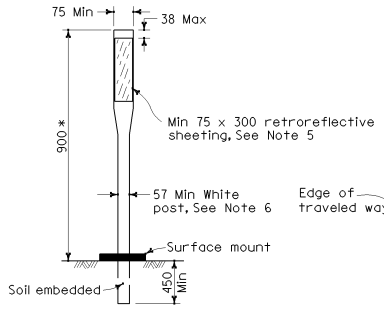

* 700 Min where speeds are 65 km/h or less.

CHANNELIZERS

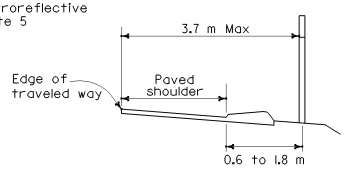

DELINEATOR POSITIONING

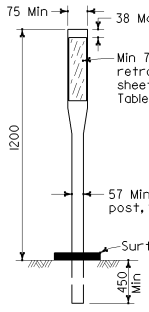

CLASS I
FLEXIBLE POST

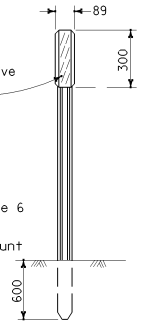

CLASS 2
METAL POST
See Note 4

DELINEATORS

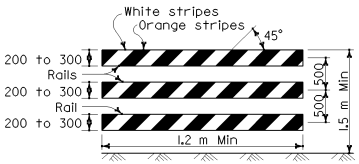

TYPE III BARRICADE

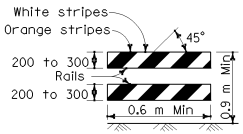

TYPE II BARRICADE

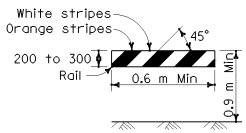

TYPE I BARRICADE
See Note A

BARRICADES (See Note 3)

Only face of rails shown. Barricade construction materials and supports as specified in the specifications.

TABLE 2 - BARRICADES

BARRICADE	TYPE I	TYPE II	TYPE III
Width of Rail	200 Min-300 Max *	200 Min-300 Max *	200 Min-300 Max *
Length of Rail	0.6 m Min	0.6 m Min	1.2 m Min
Width of Stripes * *	150	150	150
Height	0.9 m Min	0.9 m Min	1.5 m Min
Number of Retroreflective Rail Faces	2 (one each direction)	4 (two each direction)	3 if facing traffic in one direction 6 if facing traffic in two direction

* For the wooden option dimensions are nominal lumber dimensions.
* * For rails less than 0.9 m long, 100 mm wide stripes shall be used.

NOTE A

Barricades to have a minimum of 0.17 m^2 of retroreflective area facing traffic when used on freeways, expressways, and other high speed highways.

TABLE I - DELINEATORS

TYPE	RETROREFLECTIVE SHEETING	
	FRONT	BACK
E	White	White (See Note I)
F	White	None
G	Yellow	None
I	Yellow	Yellow (See Note I)
J	Red	None

NOTES

1. The retroreflective sheeting used on the back of delineator shall be a minimum size of 75 mm x 75 mm.
2. The type of delineator to be installed will be designated on the plans.
3. All barricade stripes shall be retroreflective.
4. See Standard Plan A73B for Metal Post Details.
5. Unless shown otherwise on the plans, or as directed by the Engineer, the color of the retroreflective sheeting for permanent channelizers shall conform to the color of the pavement markings it supplements.
6. Except, Class 1 (Flexible Post) temporary delineators and temporary channelizers in work zones shall be orange post with white retroreflective sheeting.

Caltrans Metric

DIST	COUNTY	ROUTE	KILOMETER POST TOTAL PROJECT	SHEET NO.	TOTAL SHEETS

REGISTERED CIVIL ENGINEER
July 1, 2004
PLANS APPROVAL DATE

REGISTERED PROFESSIONAL ENGINEER Greg W. Edwards No. C36386 Exp. 6-30-06 CIVIL STATE OF CALIFORNIA

The State of California or its officers or agents shall not be responsible for the accuracy or completeness of electronic copies of this plan sheet.

To get to the Caltrans web site, go to: http://www.dot.ca.gov

STATE OF CALIFORNIA
DEPARTMENT OF TRANSPORTATION

DELINEATORS, CHANNELIZERS AND BARRICADES

NO SCALE

ALL DIMENSIONS ARE IN MILLIMETERS UNLESS OTHERWISE SHOWN

A73C

2004 Std PLAN A73C

04-09-04

Back to Table of Contents

DIST	COUNTY	ROUTE	KILOMETER POST TOTAL PROJECT	SHEET NO.	TOTAL SHEETS

Caltrans Metric

Mark S. Turner
PROFESSIONAL LAND SURVEYOR

July 1, 2004
PLANS APPROVAL DATE

PROFESSIONAL LAND SURVEYOR — Mark S. Turner — No. 6228 — Exp. 3-31-06 — STATE OF CALIFORNIA

The State of California or its officers or agents shall not be responsible for the accuracy or completeness of electronic copies of this plan sheet.

To get to the Caltrans web site, go to: http://www.dot.ca.gov

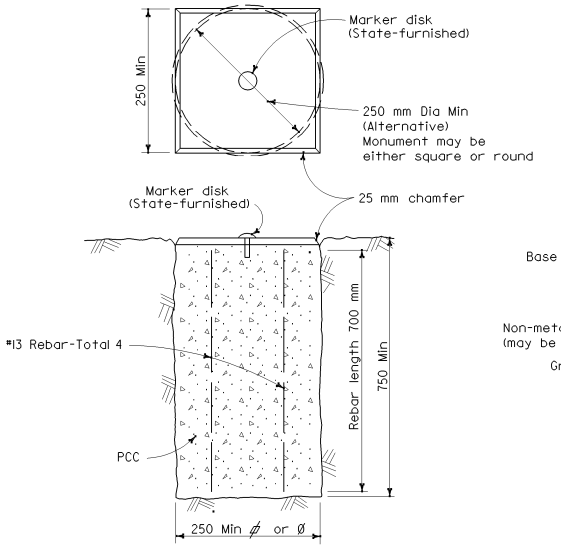

TYPE A

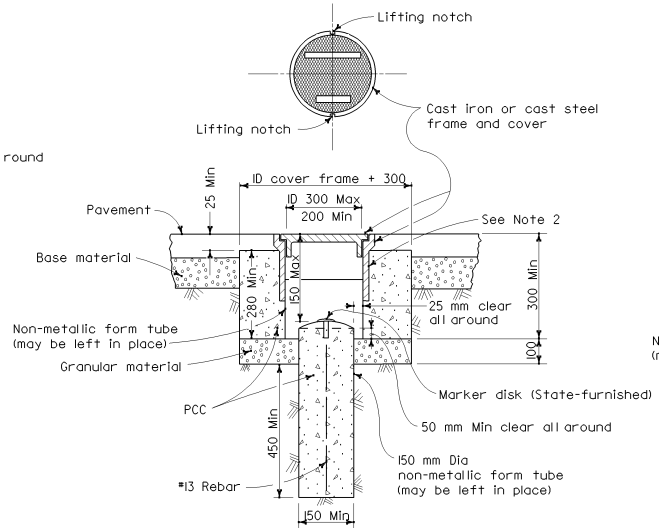

TYPE D
Alternative No. 1

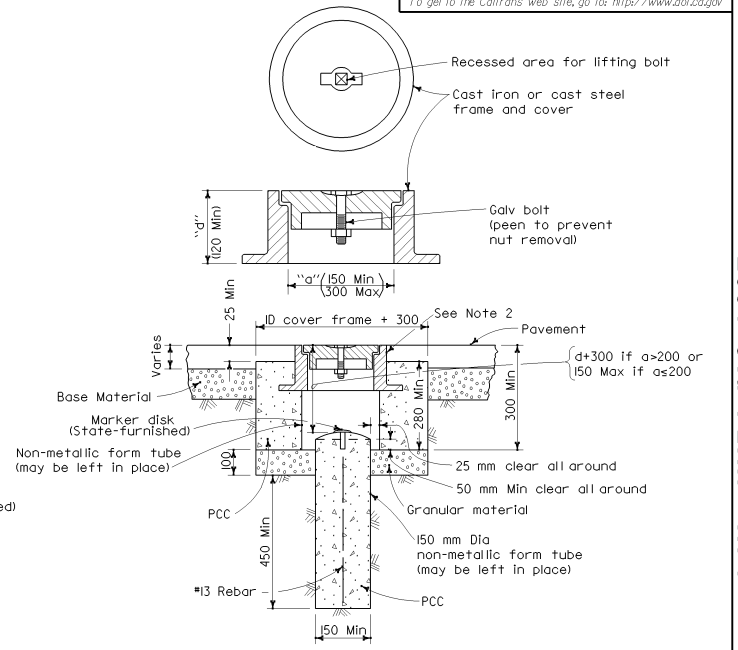

TYPE D
Alternative No. 2

NOTES

1. The configuration of the cast iron or cast steel frame and cover may vary from that shown.
2. Frame shall be embedded in the concrete a minimum of 75 mm.
3. Type D monument shall be either Alternative No. 1 or Alternative No. 2 at the contractor's option.
4. All portland cement concrete shall be Class 2 or minor concrete with 25 mm maximum aggregate.

STATE OF CALIFORNIA
DEPARTMENT OF TRANSPORTATION

SURVEY MONUMENTS

NO SCALE

ALL DIMENSIONS ARE IN
MILLIMETERS UNLESS OTHERWISE SHOWN

A74

03-25-04

2004 Std PLAN A74

Back to Table of Contents

DIST	COUNTY	ROUTE	KILOMETER POST TOTAL PROJECT	SHEET NO.	TOTAL SHEETS

Caltrans Metric

REGISTERED CIVIL ENGINEER

July 1, 2004
PLANS APPROVAL DATE

REGISTERED PROFESSIONAL ENGINEER Ellis K. Hirst No. C17926 Exp. 6-30-05 CIVIL STATE OF CALIFORNIA

The State of California or its officers or agents shall not be responsible for the accuracy or completeness of electronic copies of this plan sheet.

To get to the Caltrans web site, go to: http://www.dot.ca.gov

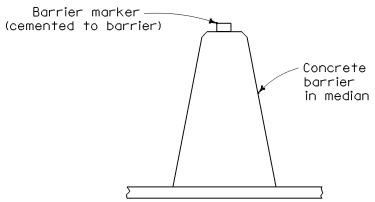

CONCRETE BARRIER TYPE 60 DELINEATION

See Notes 7 and 8

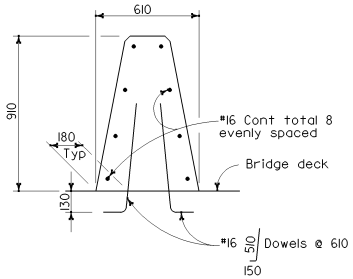

CONCRETE BARRIER TYPE 60A

Details similar to Type 60 except as noted.

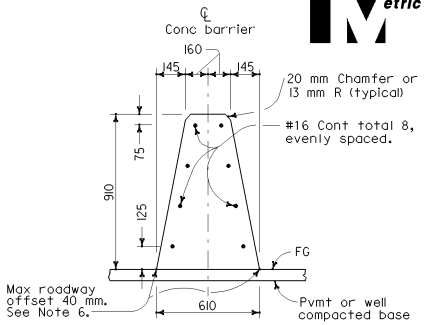

CONCRETE BARRIER TYPE 60

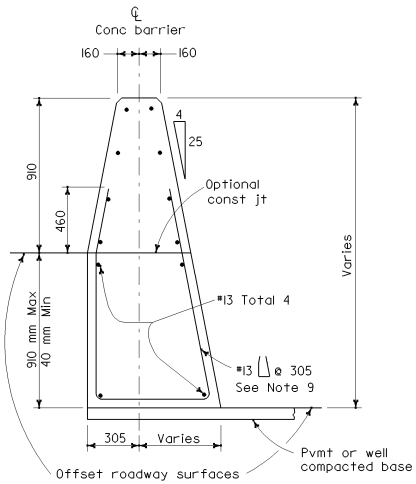

CONCRETE BARRIER TYPE 60C

Details similar to Type 60 except as noted.
Concrete barrier end anchor when necessary.

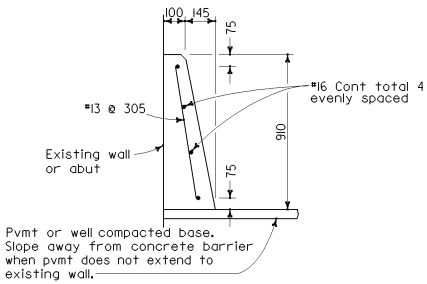

CONCRETE BARRIER TYPE 60D

NOTES

1. See Standard Plan A76B for details of Concrete Barrier Type 60 end anchors, connection to structures and transitions to Concrete Barrier Type 50 and Concrete Barrier Type 60S.
2. See Standard Plan A76C for Concrete Barrier Type 60 transitions at bridge column and sign pedestals.
3. Where glare screen is required on Concrete Barrier Type 60, use Concrete Barrier Type 60G.
4. Where the concrete barrier is added to the face of existing concrete structure, match existing weep holes.
5. Expansion joints in concrete barrier shall be located at all deck, pavement and principal wall joints. Expansion joint filler material shall be the same size as joint or 13 mm minimum.
6. Where roadway offset is greater than 40 mm, see Concrete Barrier Type 60C.
7. Barrier delineation to be used when required by the Special Provisions.
8. Spacing of barrier markers to match spacing of raised pavement markers on the adjacent median edgeline pavement delineation.
9. Reinforcing stirrup not required for roadway offsets less than 305 mm.

STATE OF CALIFORNIA
DEPARTMENT OF TRANSPORTATION

CONCRETE BARRIER TYPE 60

NO SCALE

ALL DIMENSIONS ARE IN
MILLIMETERS UNLESS OTHERWISE SHOWN

A76A

2004 Std PLAN A76A

04-20-04

Back to Table of Contents

DIST	COUNTY	ROUTE	KILOMETER POST TOTAL PROJECT	SHEET NO.	TOTAL SHEETS

Caltrans Metric

REGISTERED CIVIL ENGINEER

July 1, 2004
PLANS APPROVAL DATE

REGISTERED PROFESSIONAL ENGINEER Ellis K. Hirst No. C17926 Exp. 6-30-05 CIVIL STATE OF CALIFORNIA

The State of California or its officers or agents shall not be responsible for the accuracy or completeness of electronic copies of this plan sheet.

To get to the Caltrans web site, go to: http://www.dot.ca.gov

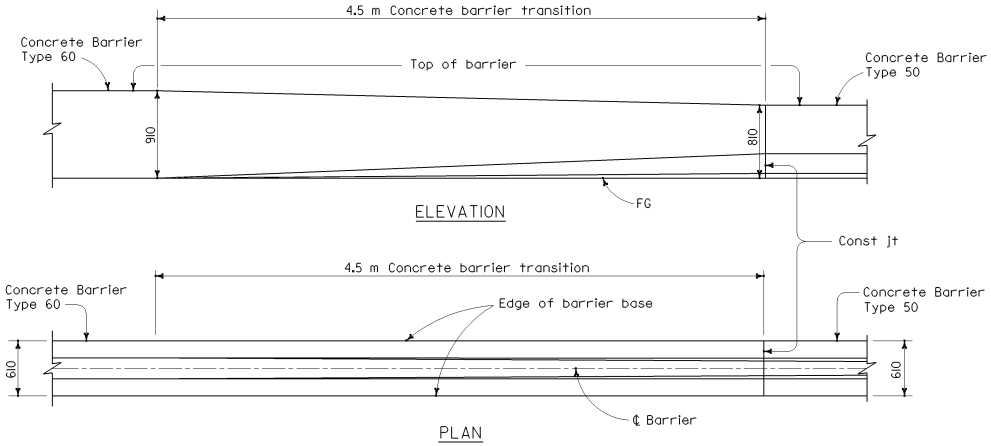

TRANSITION CONCRETE BARRIER TYPE 60 TO CONCRETE BARRIER TYPE 50

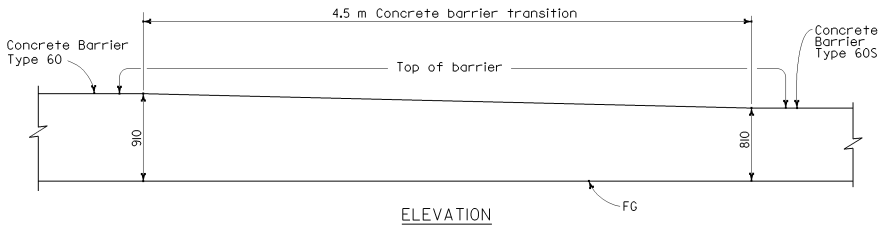

TRANSITION CONCRETE BARRIER TYPE 60 TO CONCRETE BARRIER TYPE 60S

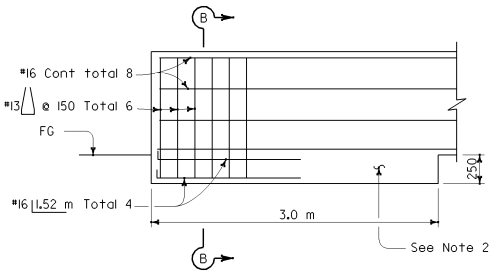

CONCRETE BARRIER TYPE 60

CONCRETE BARRIER END ANCHORAGE

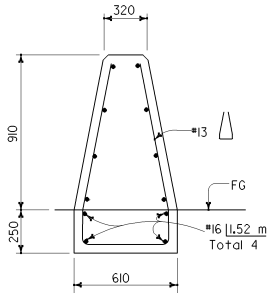

SECTION B-B

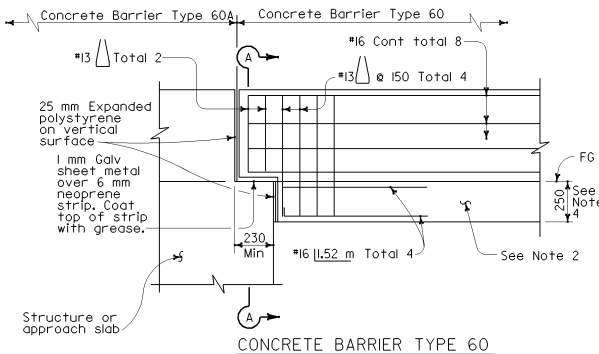

CONCRETE BARRIER TYPE 60

CONNECTION TO STRUCTURE

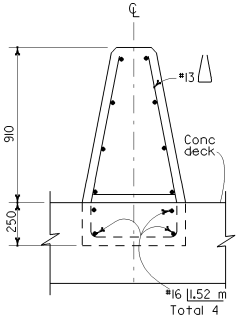

SECTION A-A

NOTES

1. See Standard Plan A76A for Concrete Barrier Type 60 and Type 60A.
2. Footing monolithic or doweled with 2-#25x205 mm @ 610 mm. The footing is required at concrete barrier ends and at interruptions in concrete barrier.
3. Expansion joints in concrete barrier shall be located at all deck, pavement and principal wall joints. Expansion joint filler material shall be the same size as joint or 13 mm minimum.
4. 250 mm Concrete barrier footing extends 3.0 m back from structure.
5. See Standard Plan A78I for transition to Thrie Beam Barrier.

STATE OF CALIFORNIA
DEPARTMENT OF TRANSPORTATION

CONCRETE BARRIER TYPE 60

NO SCALE

ALL DIMENSIONS ARE IN MILLIMETERS UNLESS OTHERWISE SHOWN

A76B

04-20-04

Back to Table of Contents

DIST	COUNTY	ROUTE	KILOMETER POST TOTAL PROJECT	SHEET NO.	TOTAL SHEETS

Caltrans Metric

REGISTERED CIVIL ENGINEER

July 1, 2004
PLANS APPROVAL DATE

REGISTERED PROFESSIONAL ENGINEER Ellis K. Hirst No. C17926 Exp. 6-30-05 CIVIL STATE OF CALIFORNIA

The State of California or its officers or agents shall not be responsible for the accuracy or completeness of electronic copies of this plan sheet.

To get to the Caltrans web site, go to: http://www.dot.ca.gov

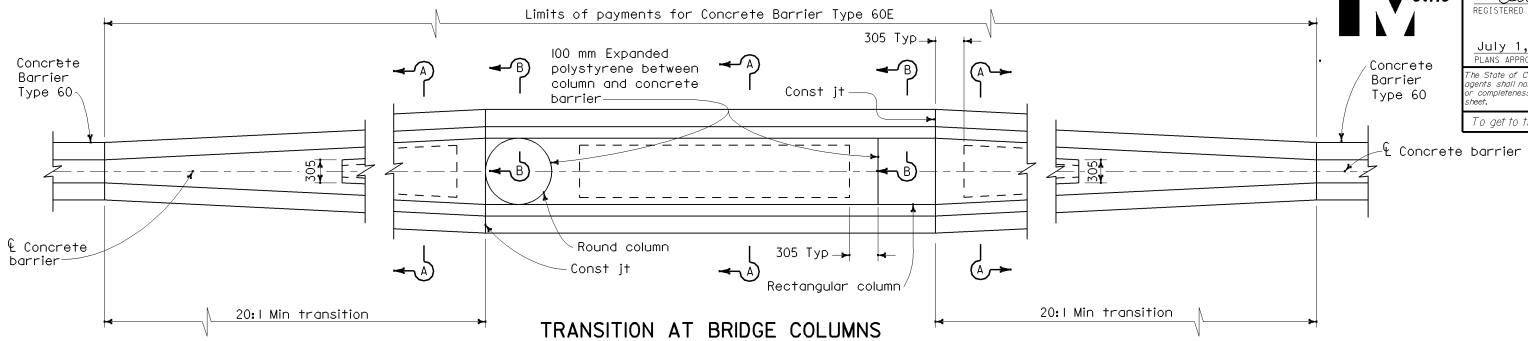

TRANSITION AT BRIDGE COLUMNS

CONCRETE BARRIER TYPE 60E

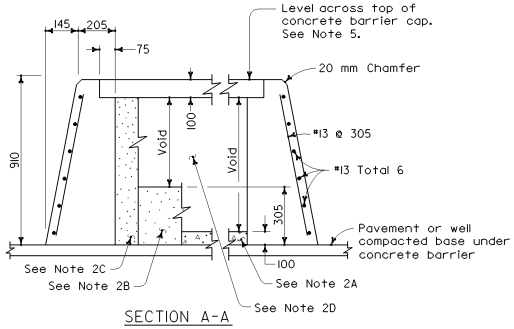

SECTION A-A

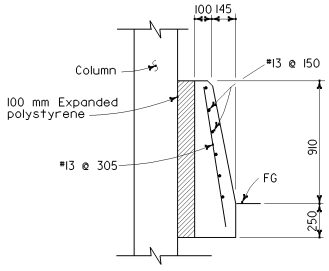

SECTION B-B

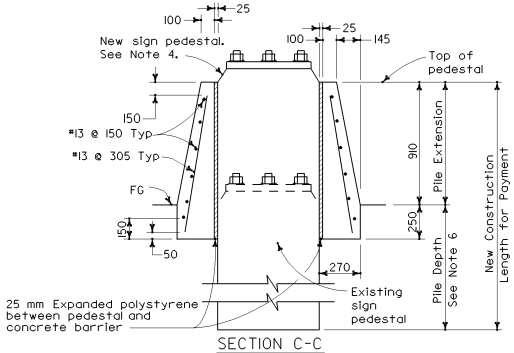

SECTION C-C

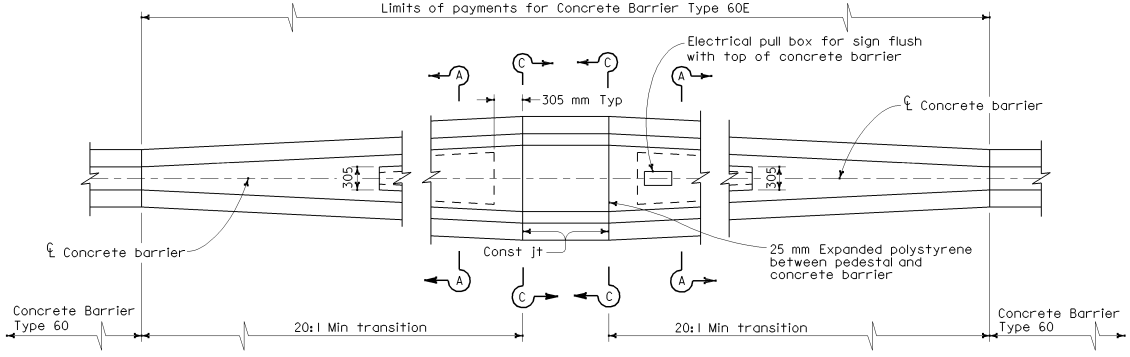

TRANSITION AT SIGN PEDESTAL

CONCRETE BARRIER TYPE 60E

NOTES

1. See Standard Plan A76A for Concrete Barrier Type 60.
2. Contractor options for fill between concrete barrier walls:
   A. Place 100 mm PCC at base between concrete barrier walls.
   B. Place 305 mm of granular material at base between walls.
   C. Place granular material from base to bottom of 100 mm cap.
   D. Monolithic concrete with foam blockouts is not permitted.
3. Reinforcing steel shall extend continuous through construction joints.
4. See "Overhead Sign" plans for sign pedestal elevations on new construction.
5. Adjust height of concrete barrier wall on low side of offset or superelevated roadways to provide level grade across top of concrete barrier cap.
6. See Overhead Signs Standard Plan Pile Foundation Tables.

STATE OF CALIFORNIA
DEPARTMENT OF TRANSPORTATION

CONCRETE BARRIER TYPE 60E

NO SCALE

ALL DIMENSIONS ARE IN MILLIMETERS UNLESS OTHERWISE SHOWN

A76C

04-21-04

Back to Table of Contents

Caltrans Metric

DIST	COUNTY	ROUTE	KILOMETER POST TOTAL PROJECT	SHEET NO.	TOTAL SHEETS

REGISTERED CIVIL ENGINEER

July 1, 2004
PLANS APPROVAL DATE

REGISTERED PROFESSIONAL ENGINEER Ellis K. Hirst No. C17926 Exp. 6-30-05 CIVIL STATE OF CALIFORNIA

The State of California or its officers or agents shall not be responsible for the accuracy or completeness of electronic copies of this plan sheet.

To get to the Caltrans web site, go to: http://www.dot.ca.gov

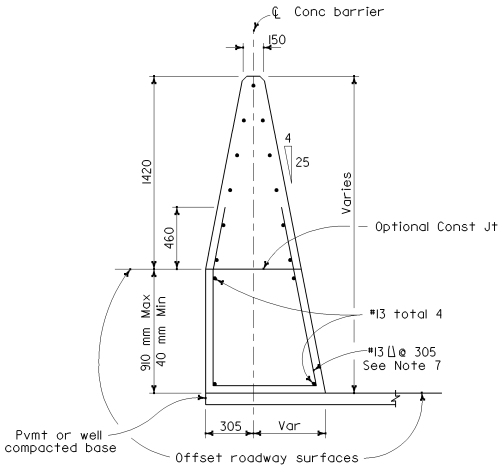

CONCRETE BARRIER TYPE 60GC

Details similar to Type 60G except as noted.

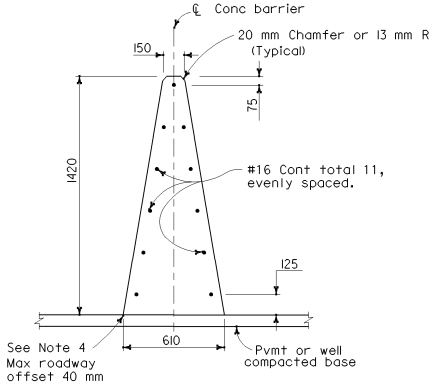

CONCRETE BARRIER TYPE 60G

(Monolithic concrete glare screen/barrier)

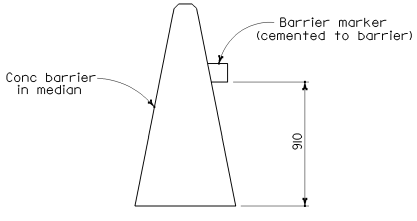

CONCRETE BARRIER TYPE 60G DELINEATION

See Notes 5 and 6

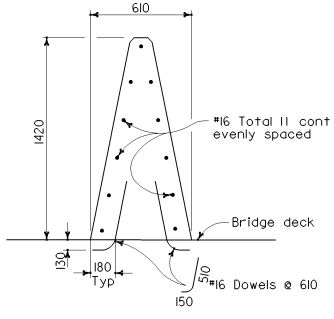

CONCRETE BARRIER TYPE 60GA

Details similar to Type 60G except as noted.

NOTES

1. See Standard Plan A76E for details of Concrete Barrier Type 60G end anchors, connection to structures and transitions to Concrete Barrier Type 60.
2. See Standard Plan A76F for Concrete Barrier Type 60G transitions at bridge column and sign pedestals.
3. Expansion joints in concrete barrier shall be located at all deck, pavement and principal wall joints. Expansion joint filler material shall be the same size as joint or 13 mm minimum.
4. Where roadway offset is greater than 40 mm, see Concrete Barrier Type 60GC.
5. Barrier delineation to be used when required by the Special Provisions.
6. Spacing of barrier markers to match spacing of raised pavement markers on the adjacent median edgeline pavement delineation.
7. Reinforcing stirrup not required for offsets less than 305 mm.

STATE OF CALIFORNIA
DEPARTMENT OF TRANSPORTATION

CONCRETE BARRIER TYPE 60G

NO SCALE

ALL DIMENSIONS ARE IN MILLIMETERS UNLESS OTHERWISE SHOWN

A76D

2004 Std PLAN A76D

04-21-04

Back to Table of Contents

DIST	COUNTY	ROUTE	KILOMETER POST TOTAL PROJECT	SHEET NO.	TOTAL SHEETS

Caltrans Metric

REGISTERED CIVIL ENGINEER

July 1, 2004
PLANS APPROVAL DATE

REGISTERED PROFESSIONAL ENGINEER Ellis K. Hirst No. C17926 Exp. 6-30-05 CIVIL STATE OF CALIFORNIA

The State of California or its officers or agents shall not be responsible for the accuracy or completeness of electronic copies of this plan sheet.

To get to the Caltrans web site, go to: http://www.dot.ca.gov

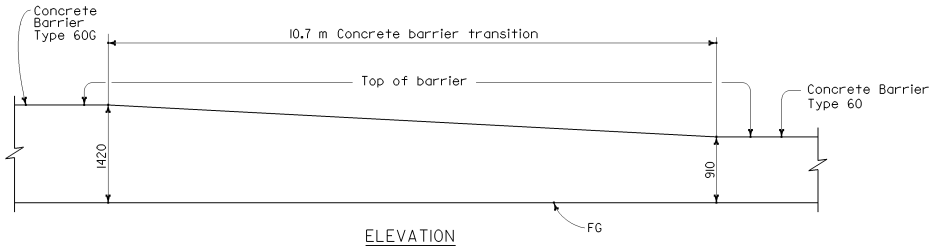

ELEVATION

TRANSITION CONCRETE BARRIER TYPE 60G TO CONCRETE BARRIER TYPE 60

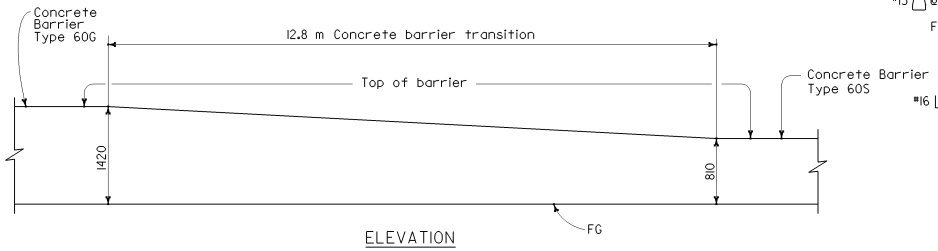

ELEVATION

TRANSITION CONCRETE BARRIER TYPE 60G TO CONCRETE BARRIER TYPE 60S

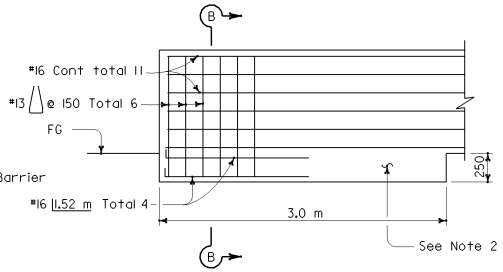

CONCRETE BARRIER TYPE 60G

CONCRETE BARRIER END ANCHORAGE

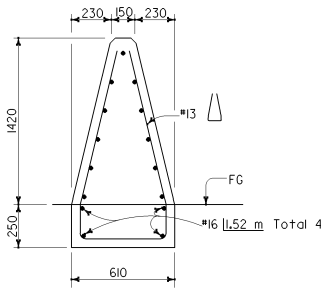

SECTION B-B

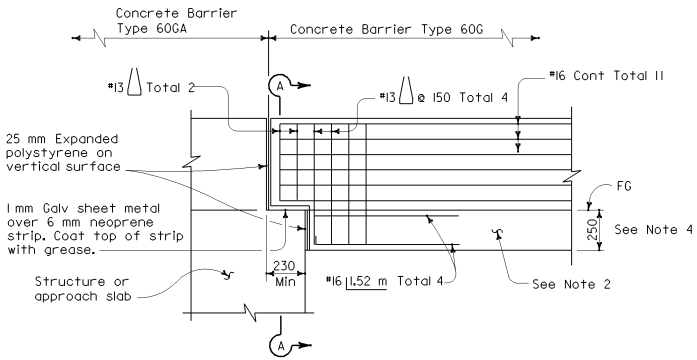

CONCRETE BARRIER TYPE 60G

CONNECTION TO STRUCTURE

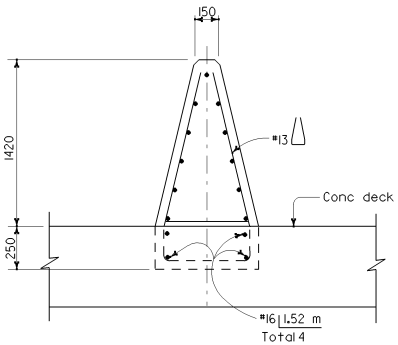

SECTION A-A

NOTES

1. See Standard Plan A76D for Concrete Barrier Type 60G and Type 60GA.
2. Footing monolithic or doweled with 2-#25x205 mm @ 610 mm. The footing is required at concrete barrier ends and at interruptions in concrete barrier.
3. Expansion joints in concrete barrier shall be located at all deck, pavement and principal wall joints. Expansion joint filler material shall be the same size as joint or 13 mm minimum.
4. 250 mm Concrete barrier footing extends 3.0 m back from structure.
5. See Standard Plan A78I for transition to Thrie Beam Barrier.

STATE OF CALIFORNIA
DEPARTMENT OF TRANSPORTATION

CONCRETE BARRIER TYPE 60G

NO SCALE

ALL DIMENSIONS ARE IN MILLIMETERS UNLESS OTHERWISE SHOWN

A76E

04-20-04

Back to Table of Contents

DIST	COUNTY	ROUTE	KILOMETER POST TOTAL PROJECT	SHEET NO.	TOTAL SHEETS

Caltrans Metric

REGISTERED CIVIL ENGINEER

July 1, 2004
PLANS APPROVAL DATE

REGISTERED PROFESSIONAL ENGINEER Ellis K. Hirst No. C17926 Exp. 6-30-05 CIVIL STATE OF CALIFORNIA

The State of California or its officers or agents shall not be responsible for the accuracy or completeness of electronic copies of this plan sheet.

To get to the Caltrans web site, go to: http://www.dot.ca.gov

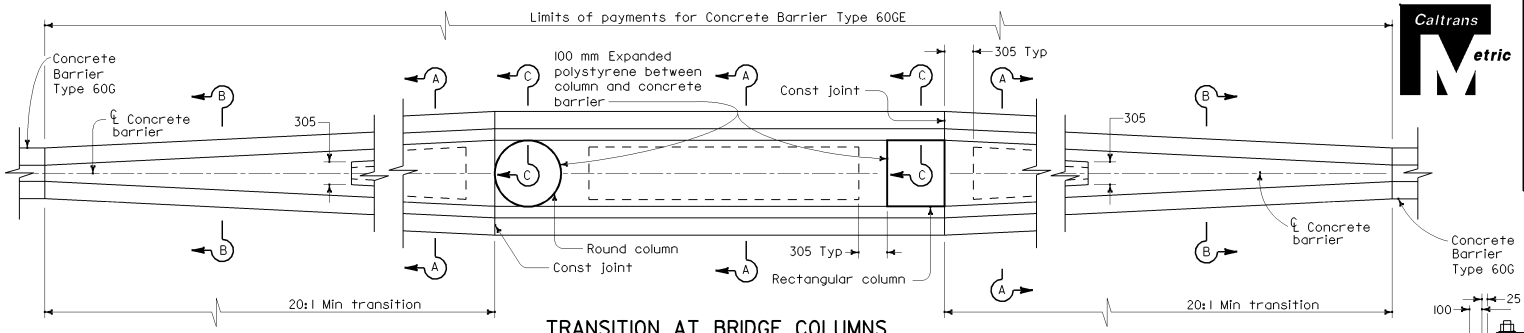

TRANSITION AT BRIDGE COLUMNS

CONCRETE BARRIER TYPE 60GE

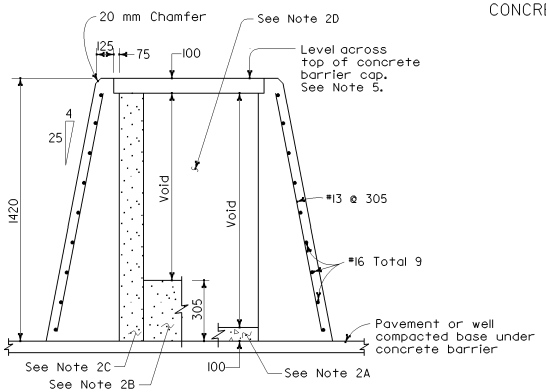

SECTION A-A

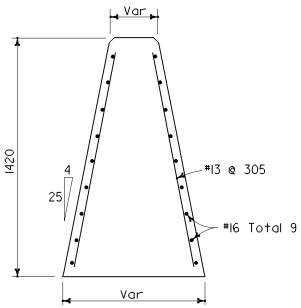

SECTION B-B

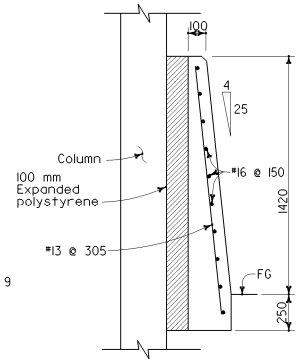

SECTION C-C

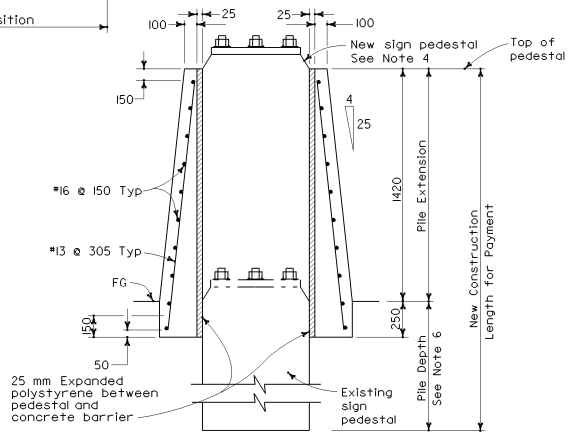

SECTION D-D

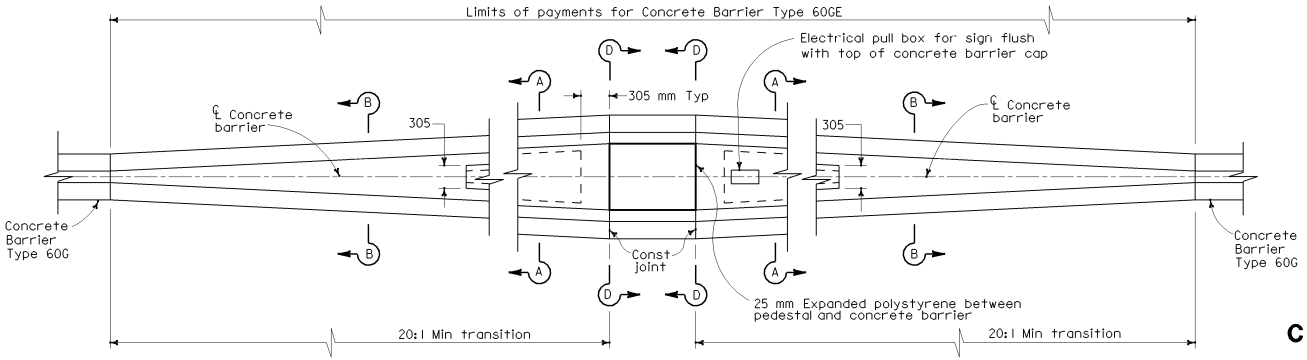

TRANSITION AT SIGN PEDESTAL

CONCRETE BARRIER TYPE 60GE

NOTES

1. See Standard Plan A76D for Concrete Barrier Type 60G.
2. Contractor options for fill between concrete barrier walls:
   A. Place 100 mm PCC at base between concrete barrier walls.
   B. Place 305 mm of granular material at base between walls.
   C. Place granular material from base to bottom of 100 mm cap.
   D. Monolithic concrete with foam blockouts is not permitted.
3. Reinforcing steel shall extend continuous through construction joints.
4. See "Overhead Sign" plans for sign pedestal elevations on new construction.
5. Adjust height of concrete barrier wall on low side of offset or superelevated roadways to provide level grade across top of concrete barrier cap.
6. See Overhead Signs Standard Plan Pile Foundation Tables.

STATE OF CALIFORNIA
DEPARTMENT OF TRANSPORTATION

CONCRETE BARRIER TYPE 60GE

NO SCALE

ALL DIMENSIONS ARE IN MILLIMETERS UNLESS OTHERWISE SHOWN

A76F

04-21-04

Back to Table of Contents

DIST	COUNTY	ROUTE	KILOMETER POST TOTAL PROJECT	SHEET NO.	TOTAL SHEETS

Caltrans Metric

REGISTERED CIVIL ENGINEER

July 1, 2004
PLANS APPROVAL DATE

REGISTERED PROFESSIONAL ENGINEER Ellis K. Hirst No. C17926 Exp. 6-30-05 CIVIL STATE OF CALIFORNIA

The State of California or its officers or agents shall not be responsible for the accuracy or completeness of electronic copies of this plan sheet.

To get to the Caltrans web site, go to: http://www.dot.ca.gov

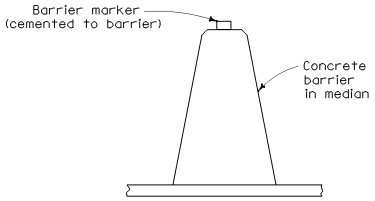

CONCRETE BARRIER TYPE 60S DELINEATION

See Notes 7 and 8

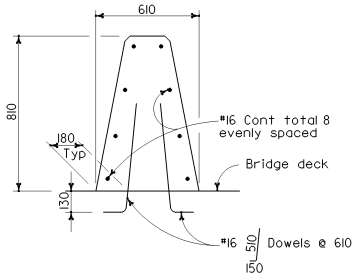

CONCRETE BARRIER TYPE 60SA

Details similar to Type 60S except as noted.

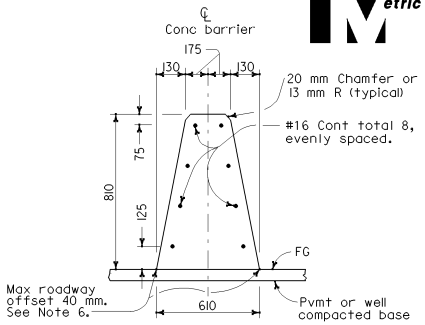

CONCRETE BARRIER TYPE 60S

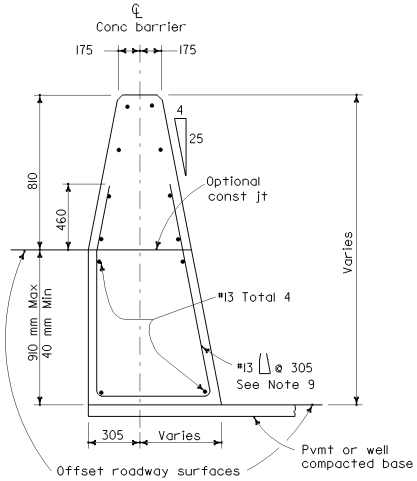

CONCRETE BARRIER TYPE 60SC

Details similar to Type 60S except as noted.
Concrete barrier end anchor when necessary.

NOTES

1. See Standard Plan A76H for details of Concrete Barrier Type 60S end anchors, connection to structures and transitions to Concrete Barrier Type 50.
2. See Standard Plan A76I for Concrete Barrier Type 60S transitions at bridge column and sign pedestals.
3. Where glare screen is required on top of concrete barrier, use Concrete Barrier Type 60G.
4. Where the concrete barrier is added to the face of existing concrete structure, match existing weep holes.
5. Expansion joints in concrete barrier shall be located at all deck, pavement and principal wall joints. Expansion joint filler material shall be the same size as joint or 13 mm minimum.
6. Where roadway offset is greater than 40 mm, see Concrete Barrier Type 60SC.
7. Barrier delineation to be used when required by the Special Provisions.
8. Spacing of barrier markers to match spacing of raised pavement markers on the adjacent median edgeline pavement delineation.
9. Reinforcing stirrup not required for roadway offsets less than 305 mm.

STATE OF CALIFORNIA
DEPARTMENT OF TRANSPORTATION

CONCRETE BARRIER TYPE 60S

NO SCALE

ALL DIMENSIONS ARE IN
MILLIMETERS UNLESS OTHERWISE SHOWN

A76G

2004 Std PLAN A76G

04-20-04

Back to Table of Contents

DIST	COUNTY	ROUTE	KILOMETER POST TOTAL PROJECT	SHEET NO.	TOTAL SHEETS

Caltrans Metric

REGISTERED CIVIL ENGINEER

July 1, 2004
PLANS APPROVAL DATE

REGISTERED PROFESSIONAL ENGINEER Ellis K. Hirst No. C17926 Exp. 6-30-05 CIVIL STATE OF CALIFORNIA

The State of California or its officers or agents shall not be responsible for the accuracy or completeness of electronic copies of this plan sheet.

To get to the Caltrans web site, go to: http://www.dot.ca.gov

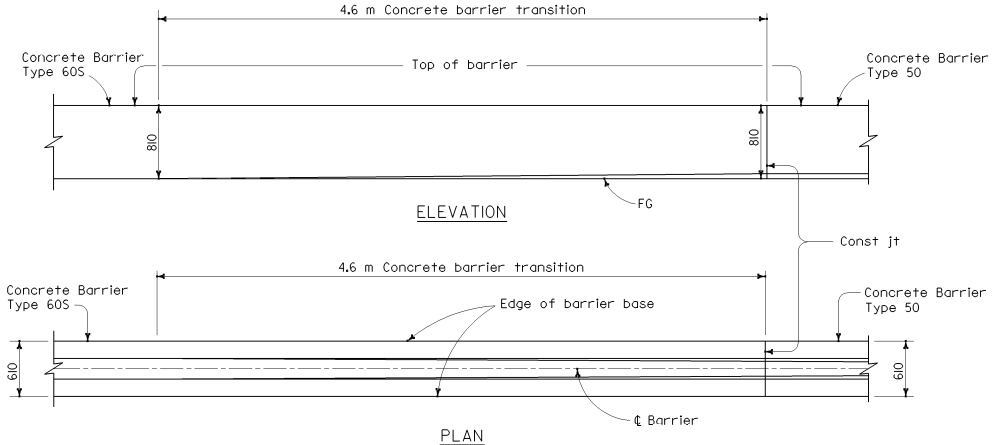

TRANSITION TYPE 60S CONCRETE BARRIER TO TYPE 50 CONCRETE BARRIER

NOTES

1. See Standard Plan A76G for Concrete Barrier Type 60S and Type 60SA.
2. Footing monolithic or doweled with 2-#25x205 mm @ 610 mm. The footing is required at concrete barrier ends and at interruptions in concrete barrier.
3. Expansion joints in concrete barrier shall be located at all deck, pavement and principal wall joints. Expansion joint filler material shall be the same size as joint or 13 mm minimum.
4. 250 mm Concrete barrier footing extends 3.0 m back from structure.
5. See Standard Plan A78I for transition to Thrie Beam Barrier.

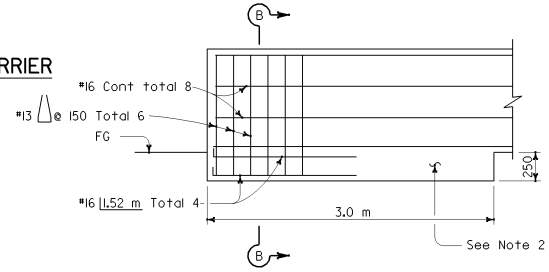

CONCRETE BARRIER TYPE 60S

CONCRETE BARRIER END ANCHORAGE

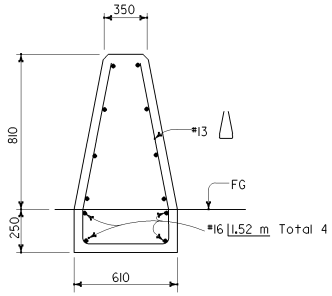

SECTION B-B

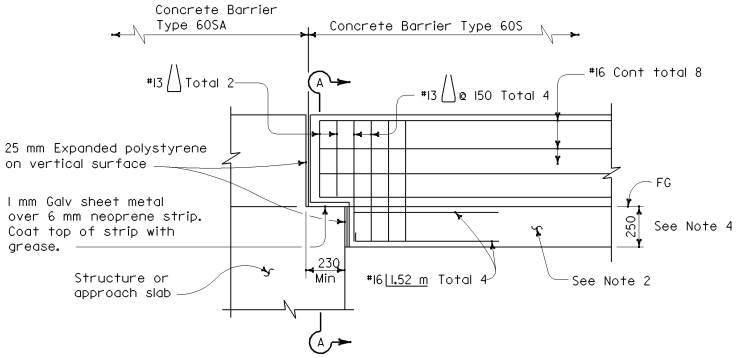

CONCRETE BARRIER TYPE 60S

CONNECTION TO STRUCTURE

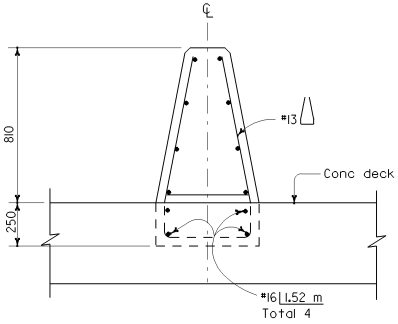

SECTION A-A

STATE OF CALIFORNIA
DEPARTMENT OF TRANSPORTATION

CONCRETE BARRIER TYPE 60S

NO SCALE

ALL DIMENSIONS ARE IN MILLIMETERS UNLESS OTHERWISE SHOWN

A76H

04-20-04

Back to Table of Contents

DIST	COUNTY	ROUTE	KILOMETER POST TOTAL PROJECT	SHEET NO.	TOTAL SHEETS

Caltrans Metric

REGISTERED CIVIL ENGINEER

July 1, 2004
PLANS APPROVAL DATE

REGISTERED PROFESSIONAL ENGINEER Ellis K. Hirst No. C17926 Exp. 6-30-05 CIVIL STATE OF CALIFORNIA

The State of California or its officers or agents shall not be responsible for the accuracy or completeness of electronic copies of this plan sheet.

To get to the Caltrans web site, go to: http://www.dot.ca.gov

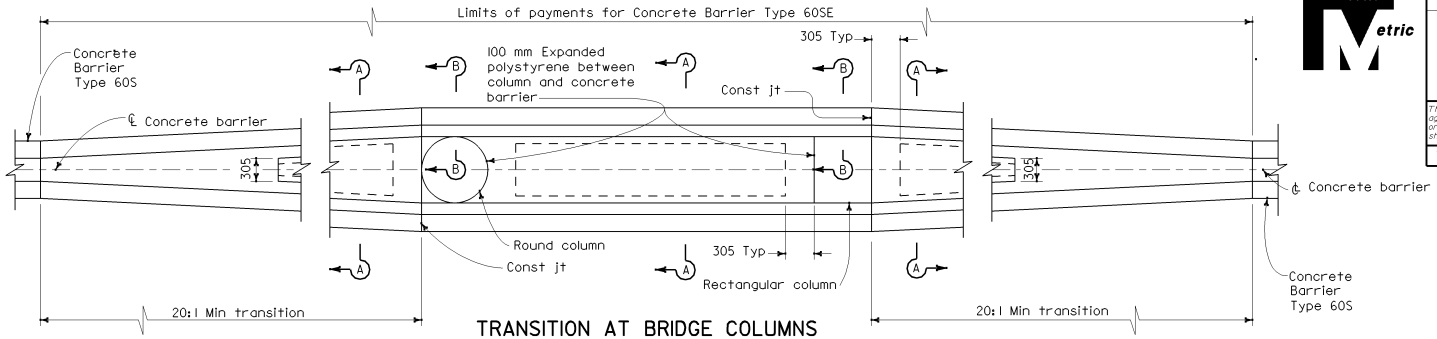

TRANSITION AT BRIDGE COLUMNS

CONCRETE BARRIER TYPE 60SE

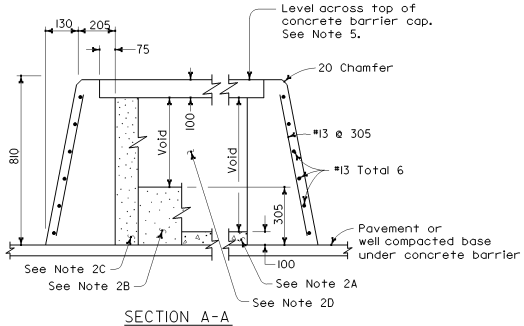

SECTION A-A

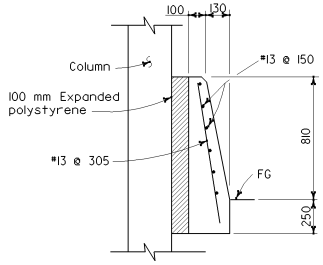

SECTION B-B

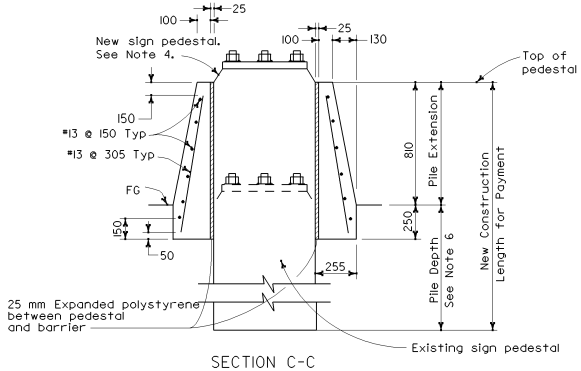

SECTION C-C

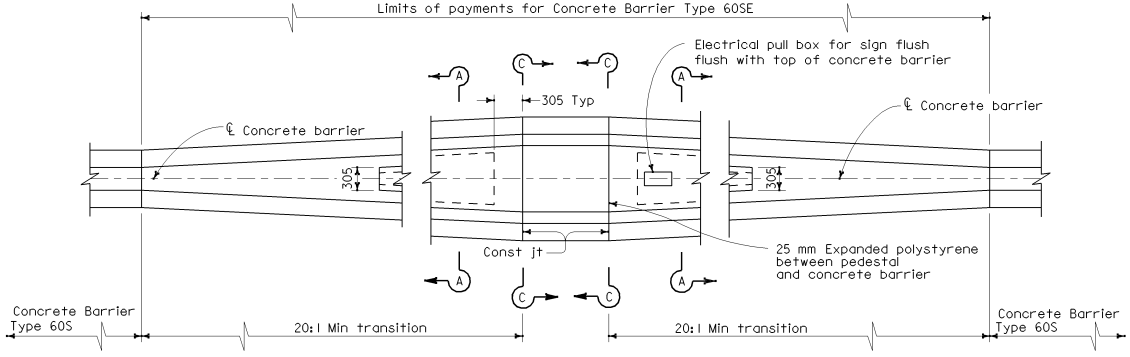

TRANSITION AT SIGN PEDESTAL

CONCRETE BARRIER TYPE 60SE

NOTES

1. See Standard Plan A76G for Concrete Barrier Type 60S.
2. Contractor options for fill between concrete barrier walls:
   A. Place 100 mm PCC at base between concrete barrier walls.
   B. Place 305 mm of granular material at base between walls.
   C. Place granular material from base to bottom of 100 mm cap.
   D. Monolithic concrete with foam blockouts is not permitted.
3. Reinforcing steel shall extend continuous through construction joints.
4. See "Overhead Sign" plans for sign pedestal elevations on new construction.
5. Adjust height of concrete barrier wall on low side of offset or superelevated roadways to provide level grade across top of concrete barrier cap.
6. See Overhead Signs Standard Plan Pile Foundation Tables.

STATE OF CALIFORNIA
DEPARTMENT OF TRANSPORTATION

CONCRETE BARRIER TYPE 60SE

NO SCALE

ALL DIMENSIONS ARE IN MILLIMETERS UNLESS OTHERWISE SHOWN

A76I

2004 Std PLAN A76I

04-21-04

Back to Table of Contents

Caltrans Metric

DIST	COUNTY	ROUTE	KILOMETER POST TOTAL PROJECT	SHEET NO.	TOTAL SHEETS

REGISTERED CIVIL ENGINEER

July 1, 2004
PLANS APPROVAL DATE

REGISTERED PROFESSIONAL ENGINEER
Ellis K. Hirst
No. C17926
Exp. 6-30-05
CIVIL
STATE OF CALIFORNIA

The State of California or its officers or agents shall not be responsible for the accuracy or completeness of electronic copies of this plan sheet.

To get to the Caltrans web site, go to: http://www.dot.ca.gov

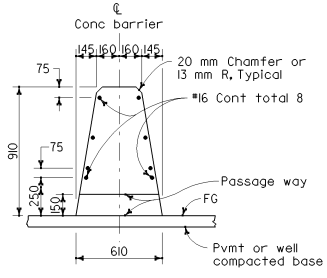

SECTION A-A
(Concrete Barrier Type 60 shown)

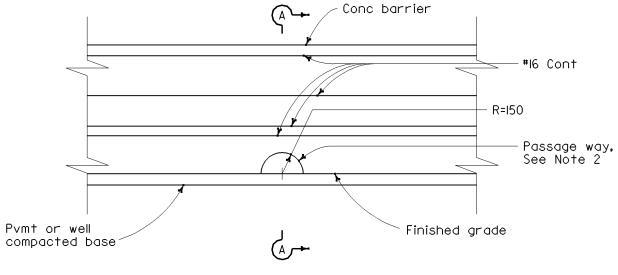

ELEVATION
(See Notes 1 and 3)

NOTES

1. Type S Passage Way typically used for crossing of small size animals.
2. At the option of the Contractor, the passage way opening shall be constructed by using either the cast-in-place method, with the allowance of the form to be left in place, or once the barrier is constructed, drilling through the barrier to create the opening.
3. See Standard Plan A76A for typical details of Concrete Barrier Type 60.
4. Direction of traffic indicated by ⟶.

STATE OF CALIFORNIA
DEPARTMENT OF TRANSPORTATION

CONCRETE BARRIER WILDLIFE PASSAGE WAY (TYPE S)

NO SCALE

ALL DIMENSIONS ARE IN MILLIMETERS UNLESS OTHERWISE SHOWN

A76J

2004 Std PLAN A76J

06-23-04

Back to Table of Contents

DIST	COUNTY	ROUTE	KILOMETER POST TOTAL PROJECT	SHEET NO.	TOTAL SHEETS

Caltrans Metric

REGISTERED CIVIL ENGINEER

July 1, 2004
PLANS APPROVAL DATE

REGISTERED PROFESSIONAL ENGINEER
Ellis K. Hirst
No. C17926
Exp. 6-30-05
CIVIL
STATE OF CALIFORNIA

The State of California or its officers or agents shall not be responsible for the accuracy or completeness of electronic copies of this plan sheet.

To get to the Caltrans web site, go to: http://www.dot.ca.gov

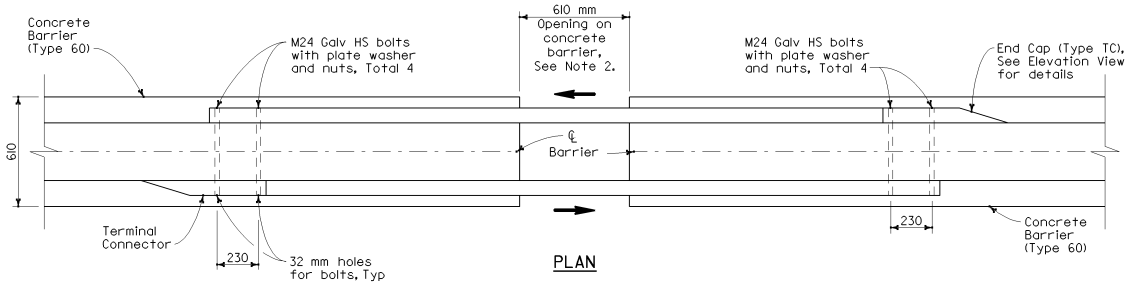

PLAN

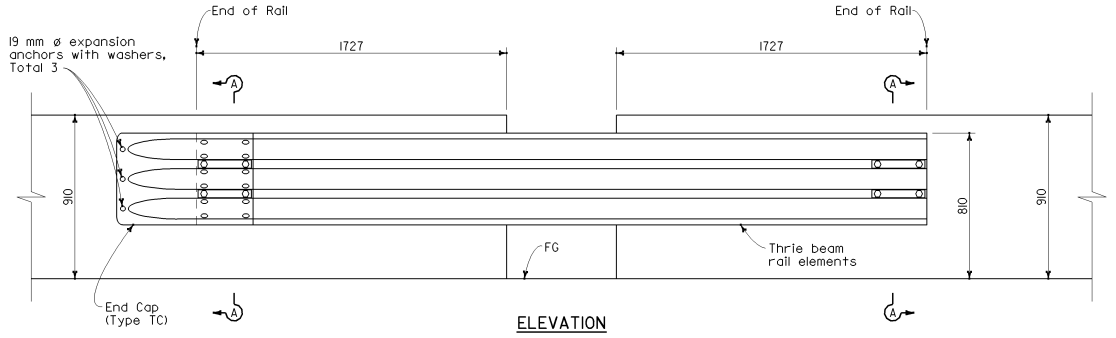

ELEVATION

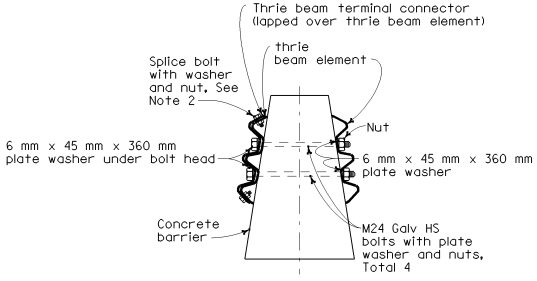

SECTION A-A

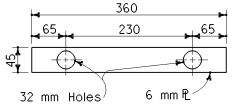

DETAIL A

6 mm PLATE WASHER

NOTES

1. Type M Passage Way typically used for crossing of medium size animals.
2. At the option of the Contractor, the passage way opening shall be constructed by either forming the opening in the concrete barrier, or after the concrete barrier is constructed, saw-cutting the outline of the opening and removing the concrete and bar reinforcing steel within the limits of the opening.
3. For details of the thrie beam element and hardware, see the A78 series of the Standard Plans. For details of Concrete Barrier, Type 60, see the A76 series of the Standard Plans.
4. The end cap, and the thrie beam element, may be spliced together prior to bolting the elements to the concrete barrier. All 8 splice bolts to connect the end cap to the rail element are not required. The 2 top and the 2 bottom splice bolts with washers and nuts shall be used.
5. Direction of traffic indicated by → .

STATE OF CALIFORNIA
DEPARTMENT OF TRANSPORTATION

CONCRETE BARRIER WILDLIFE PASSAGE WAY (TYPE M)

NO SCALE

ALL DIMENSIONS ARE IN MILLIMETERS UNLESS OTHERWISE SHOWN

A76K

2004 Std PLAN A76K

06-23-04

Back to Table of Contents

DIST	COUNTY	ROUTE	KILOMETER POST TOTAL PROJECT	SHEET NO.	TOTAL SHEETS

Caltrans Metric

REGISTERED CIVIL ENGINEER

July 1, 2004
PLANS APPROVAL DATE

REGISTERED PROFESSIONAL ENGINEER
Ellis K. Hirst
No. C17926
Exp. 6-30-05
CIVIL
STATE OF CALIFORNIA

The State of California or its officers or agents shall not be responsible for the accuracy or completeness of electronic copies of this plan sheet.

To get to the Caltrans web site, go to: http://www.dot.ca.gov

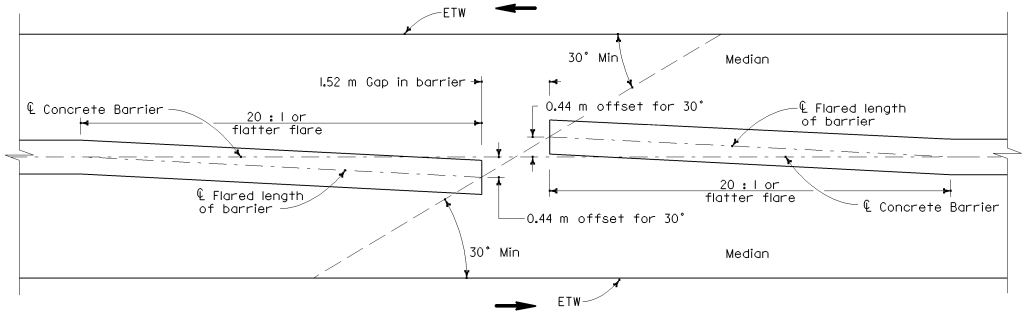

PLAN

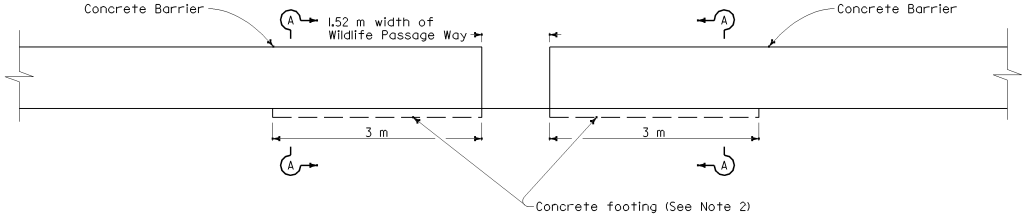

ELEVATION

NOTES

1. Type L Passage Way typically used for crossing of large size animals.
2. Barrier end anchorage shall be constructed as shown in Section A-A of this plan or as shown on Standard Plan A76B.
3. Direction of traffic indicated by ➡.

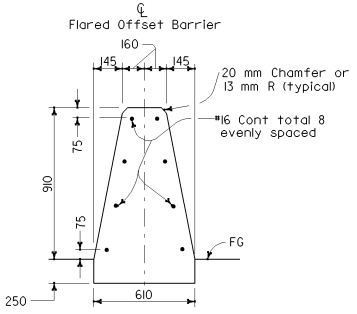

SECTION A-A
See Note 2

STATE OF CALIFORNIA
DEPARTMENT OF TRANSPORTATION

CONCRETE BARRIER WILDLIFE PASSAGE WAY (TYPE L)

NO SCALE

ALL DIMENSIONS ARE IN MILLIMETERS UNLESS OTHERWISE SHOWN

A76L

06-23-04

2004 Std PLAN A76L

Back to Table of Contents

DIST	COUNTY	ROUTE	KILOMETER POST TOTAL PROJECT	SHEET NO.	TOTAL SHEETS

Caltrans Metric

REGISTERED CIVIL ENGINEER

July 1, 2004
PLANS APPROVAL DATE

REGISTERED PROFESSIONAL ENGINEER Ellis K. Hirst No. C17926 Exp. 6-30-05 CIVIL STATE OF CALIFORNIA

The State of California or its officers or agents shall not be responsible for the accuracy or completeness of electronic copies of this plan sheet.

To get to the Caltrans web site, go to: http://www.dot.ca.gov

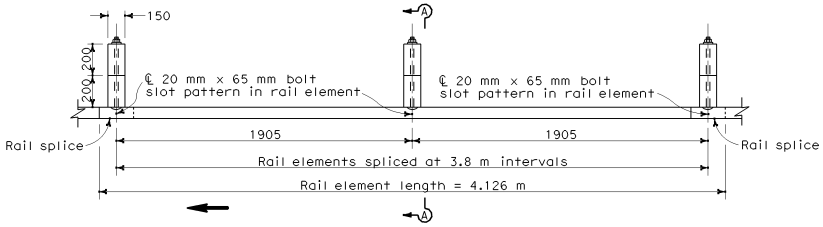

PLAN

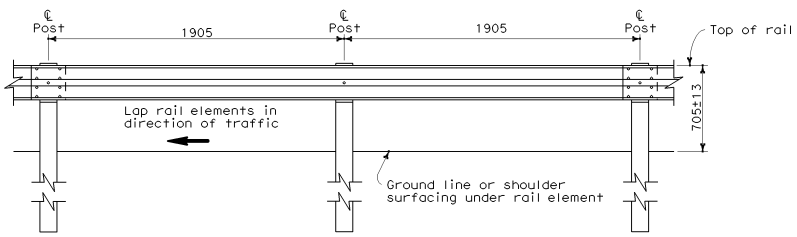

ELEVATION

METAL BEAM GUARD RAILING WITH WOOD POST AND BLOCKS

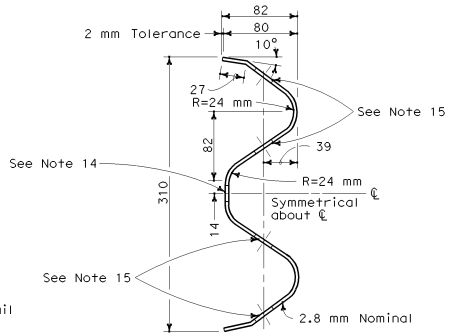

SECTION THRU RAIL ELEMENT

NOTES

1. For details of steel post installations, see Standard Plan A77A2.
2. For details of standard hardware used to construct guard railing, see Standard Plan A77B1.
3. For details of wood posts and wood blocks used to construct guard railing, see Standard Plan A77C1.
4. For additional installation details, see Standard Plan A77C3.
5. Guard railing post spacing to be 1905 mm center to center, except as otherwise noted.
6. For guard railing typical layouts, see the A77E, A77F and A77G Series of Standard Plans.
7. For terminal system end treatment details, see the A77L Series of Standard Plans.
8. For guard railing end anchor details, see Standard Plans A77H1 and A77I2.
9. For details of guard railing transition to bridge railing, see Standard Plan A77J4.
10. For additional details of guard railing connection to bridge railings, see Standard Plans A77J1, A77J2 and A77K1.
11. For guard railing connection details to abutments and walls, see Standard Plan A77J3.
12. Direction of adjacent traffic indicated by ➡ .
13. For typical guard railing delineation and dike positioning details, see Standard Plan A77C4.
14. Slotted hole for bolted connection of rail element to block and post. See "Section Thru Rail Element".
15. Slotted holes for splice bolts to overlap ends of rail element. See "Section Thru Rail Element".
16. Additional hole in uppermost portion of line post is for potential future adjustments of railing height. See Standard Plan A77C1.

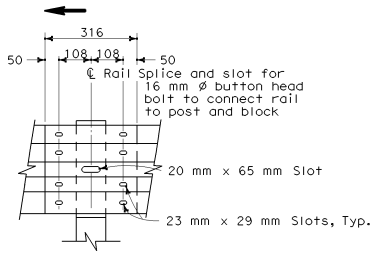

ELEVATION

RAIL ELEMENT SPLICE DETAIL

a) Connect the over lapped end of the rail elements with 16 mm ø x 35 mm button head oval shoulder splice bolts inserted into the 23 mm x 29 mm slots and bolted together with 16 mm ø x 35 mm recessed hex nuts. Recess of hex nut points toward rail element. A total of 8 bolts and nuts are to be used at each rail splice connection.

b) The ends of the rail elements are to be overlapped in the direction of traffic (see details).

c) Where end cap is to be attached to the end of a rail element, a total of 4 of the above described splice bolts and nuts are to be used.

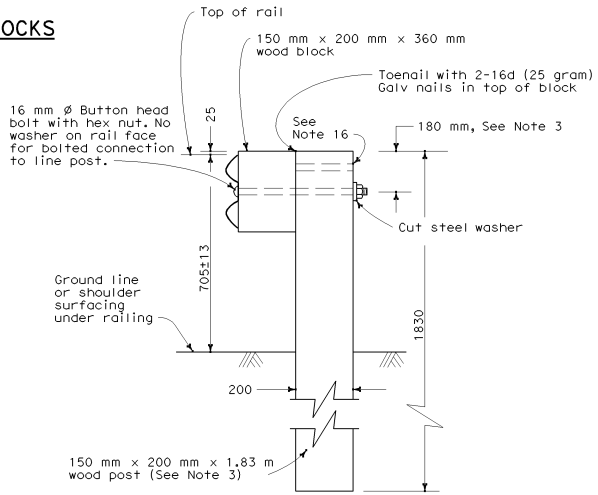

SECTION A-A

TYPICAL WOOD LINE POST INSTALLATION

See Note 4

STATE OF CALIFORNIA
DEPARTMENT OF TRANSPORTATION

METAL BEAM GUARD RAILING STANDARD RAILING SECTION (WOOD POST WITH WOOD BLOCK)

NO SCALE

ALL DIMENSIONS ARE IN MILLIMETERS UNLESS OTHERWISE SHOWN

A77A1

08-09-04

Back to Table of Contents

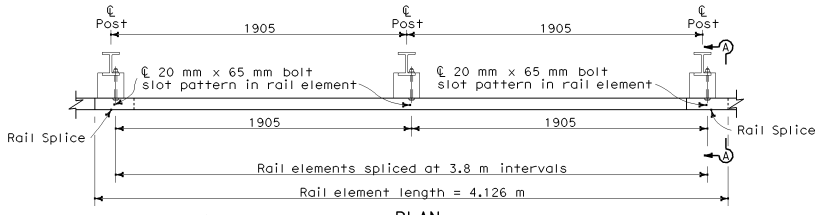

PLAN

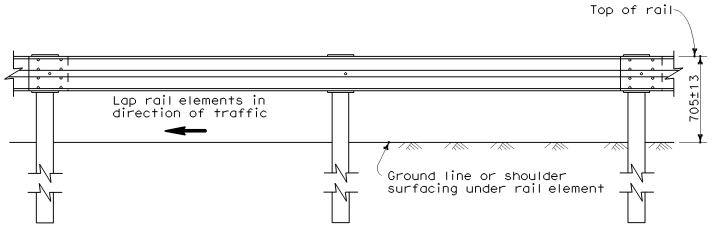

ELEVATION

METAL BEAM GUARD RAILING WITH STEEL POSTS AND NOTCHED WOOD OR NOTCHED PLASTIC BLOCKS

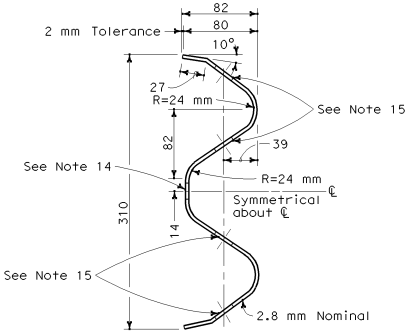

SECTION THRU RAIL ELEMENT

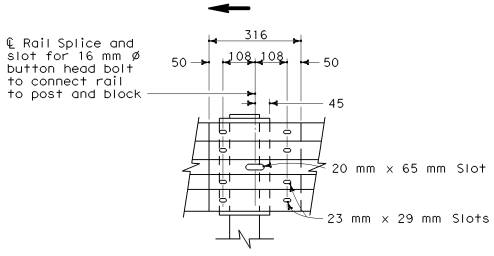

ELEVATION

RAIL ELEMENT SPLICE DETAIL

a) Connect the over lapped end of the rail elements with 16 mm ø x 35 mm button head oval shoulder splice bolts inserted into the 23 mm x 29 mm slots and bolted together with 16 mm ø x 35 mm recessed hex nuts. Recess of hex nut points toward rail element. A total of 8 bolts and nuts are to be used at each rail splice connection.

b) The ends of the rail elements are to be overlapped in the direction of traffic (see details).

c) Where end cap is to be attached to the end of a rail element, a total of 4 of the above described splice bolts and nuts are to be used.

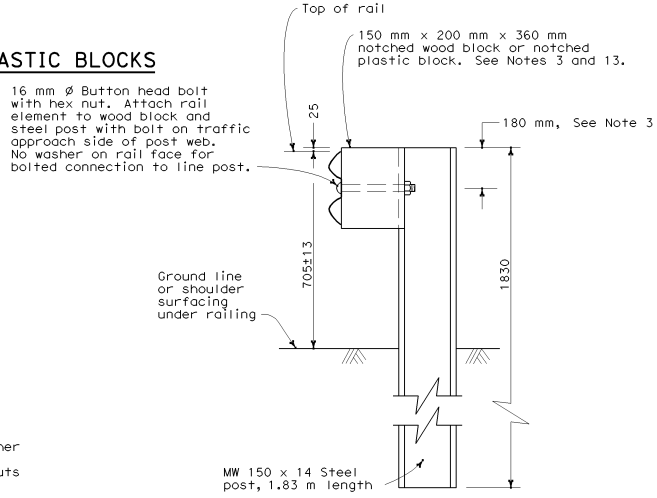

SECTION A-A

TYPICAL STEEL LINE POST INSTALLATION

See Note 4

Caltrans Metric

DIST	COUNTY	ROUTE	KILOMETER POST TOTAL PROJECT	SHEET NO.	TOTAL SHEETS

REGISTERED CIVIL ENGINEER

July 1, 2004
PLANS APPROVAL DATE

REGISTERED PROFESSIONAL ENGINEER Ellis K. Hirst No. C17926 Exp. 6-30-05 CIVIL STATE OF CALIFORNIA

The State of California or its officers or agents shall not be responsible for the accuracy or completeness of electronic copies of this plan sheet.

To get to the Caltrans web site, go to: http://www.dot.ca.gov

NOTES

1. For details of wood post installations, see Standard Plan A77A1.
2. For details of standard hardware used to construct guard railing, see Standard Plan A77B1.
3. For details of steel posts, wood blocks and plastic blocks used to construct guard railing, see Standard Plan A77C2.
4. For additional installation details, see Standard Plan A77C3.
5. Guard railing post spacing to be 1905 mm center to center, except as otherwise noted.
6. For guard railing typical layouts, see the A77E, A77F and A77G Series of Standard Plans.
7. For terminal system end treatment details, see the A77L Series of Standard Plans.
8. For guard railing end anchor details, see Standard Plans A77H1 and A77I2.
9. For details of guard railing transition to bridge railing, see Standard Plan A77J4.
10. For additional details of guard railing connection to bridge railings, see Standard Plans A77J1, A77J2 and A77K1.
11. For dike positioning and guard railing delineation details, see Standard Plan A77C4.
12. Direction of adjacent traffic indicated by ➡ .
13. Notched face of block faces steel post.
14. Slotted hole for bolted connection of rail element to block and post. See "Section Thru Rail Element".
15. Slotted holes for splice bolts to overlap ends of rail element. See "Section Thru Rail Element".

STATE OF CALIFORNIA
DEPARTMENT OF TRANSPORTATION

METAL BEAM GUARD RAILING STANDARD RAILING SECTION (STEEL POST WITH NOTCHED WOOD OR NOTCHED PLASTIC BLOCK)

NO SCALE

ALL DIMENSIONS ARE IN MILLIMETERS UNLESS OTHERWISE SHOWN

A77A2

2004 Std PLAN A77A2

08-09-04

Back to Table of Contents

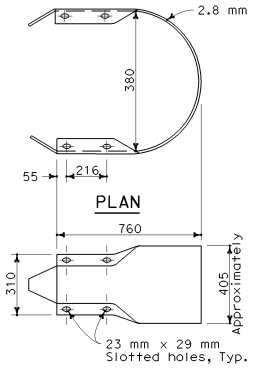

ELEVATION

RETURN CAP (TYPE A)

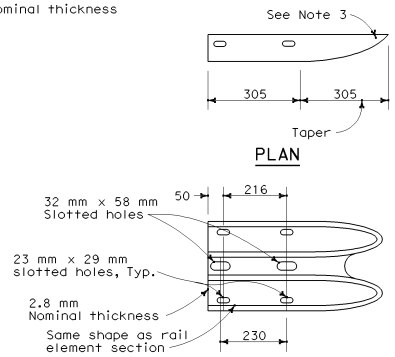

ELEVATION

END CAP (TYPE A)

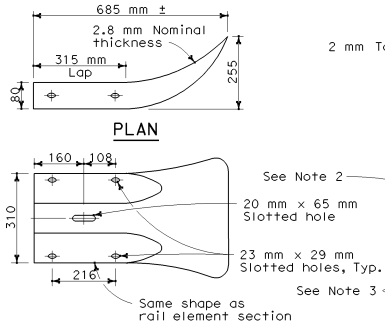

ELEVATION

END CAP (TYPE B)

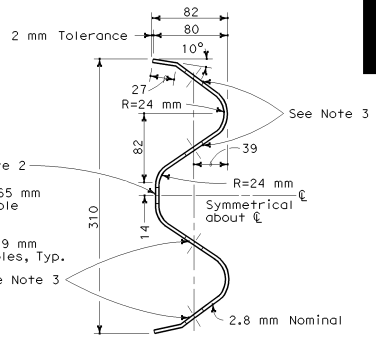

SECTION THRU RAIL ELEMENT

Caltrans Metric

DIST	COUNTY	ROUTE	KILOMETER POST TOTAL PROJECT	SHEET NO.	TOTAL SHEETS

REGISTERED CIVIL ENGINEER

July 1, 2004

PLANS APPROVAL DATE

REGISTERED PROFESSIONAL ENGINEER Ellis K. Hirst No. C17926 Exp. 6-30-05 CIVIL STATE OF CALIFORNIA

The State of California or its officers or agents shall not be responsible for the accuracy or completeness of electronic copies of this plan sheet.

To get to the Caltrans web site, go to: http://www.dot.ca.gov

NOTES

1. Flat plate washer detail has been deleted.
2. Slotted hole for bolted connection of rail element to block and post.
3. Slotted holes for splice bolts to overlap ends of rail element.

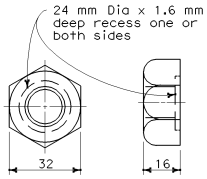

16 mm ø RECESS NUT

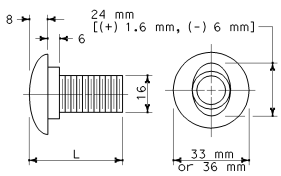

16 mm ø BUTTON HEAD BOLT

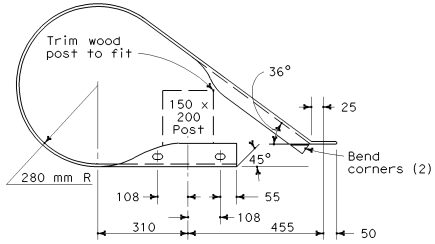

L	THREAD LENGTH
35 mm	full thread length
50 mm	full thread length
255 mm	100 mm Min thread length
460 mm	100 mm Min thread length
**70 mm	50 mm Min thread length
**480 mm	100 mm Min thread length

**For nested rail applications.

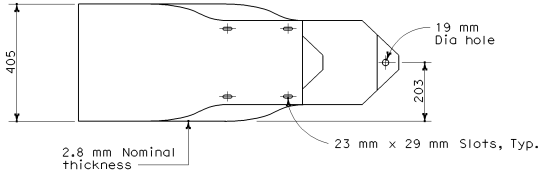

ELEVATION

END CAP (TYPE C)

STATE OF CALIFORNIA
DEPARTMENT OF TRANSPORTATION

METAL BEAM GUARD RAILING STANDARD HARDWARE

NO SCALE

ALL DIMENSIONS ARE IN MILLIMETERS UNLESS OTHERWISE SHOWN

A77B1

04-30-04

Back to Table of Contents

NOTES

1. All holes in wood posts and blocks shall be 20 mm dia ± 1.6 mm.
2. Dimensions shown for wood post are nominal.
3. This post and block combination used for standard line post sections of guard railing.
4. This post and 200 mm x 200 mm block combination used for line post sections of guard railing on narrow roadways.
5. This post and 200 mm x 200 mm block combination is typically used where strengthened line post sections of guard railings are warranted to shield fixed objects.

Caltrans Metric

DIST	COUNTY	ROUTE	KILOMETER POST TOTAL PROJECT	SHEET NO.	TOTAL SHEETS

REGISTERED CIVIL ENGINEER

July 1, 2004
PLANS APPROVAL DATE

REGISTERED PROFESSIONAL ENGINEER
Ellis K. Hirst
No. C17926
Exp. 6-30-05
CIVIL
STATE OF CALIFORNIA

The State of California or its officers or agents shall not be responsible for the accuracy or completeness of electronic copies of this plan sheet.

To get to the Caltrans web site, go to: http://www.dot.ca.gov

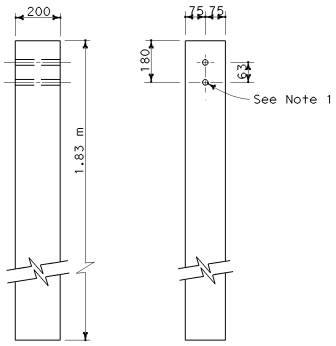

SIDE FRONT

150 mm x 200 mm
WOOD POST
See Note 3

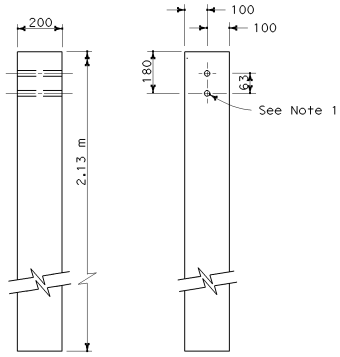

SIDE FRONT

200 mm x 200 mm
WOOD POST
See Note 4

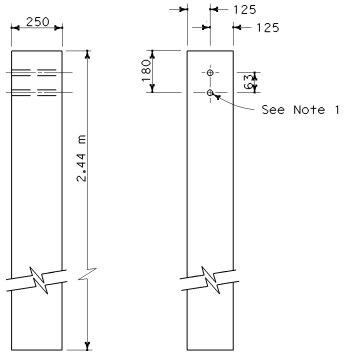

SIDE FRONT

250 mm x 250 mm
WOOD POST
See Note 5

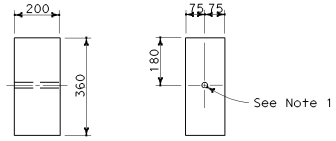

SIDE FRONT

150 mm x 200 mm
WOOD BLOCK
See Note 3

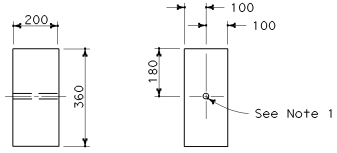

SIDE FRONT

200 mm x 200 mm
WOOD BLOCK

STATE OF CALIFORNIA
DEPARTMENT OF TRANSPORTATION

METAL BEAM GUARD RAILING WOOD POST AND WOOD BLOCK DETAILS

NO SCALE

ALL DIMENSIONS ARE IN MILLIMETERS UNLESS OTHERWISE SHOWN

A77C1

04-30-04

2004 Std PLAN A77C1

Back to Table of Contents

Caltrans Metric

DIST	COUNTY	ROUTE	KILOMETER POST TOTAL PROJECT	SHEET NO.	TOTAL SHEETS

REGISTERED CIVIL ENGINEER

July 1, 2004
PLANS APPROVAL DATE

REGISTERED PROFESSIONAL ENGINEER Ellis K. Hirst No. C17926 Exp. 6-30-05 CIVIL STATE OF CALIFORNIA

The State of California or its officers or agents shall not be responsible for the accuracy or completeness of electronic copies of this plan sheet.

To get to the Caltrans web site, go to: http://www.dot.ca.gov

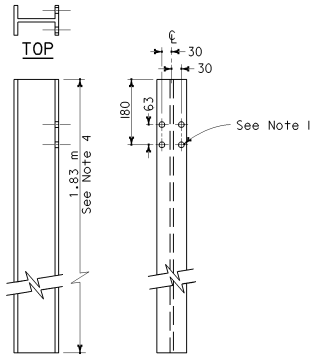

SIDE FRONT

MW 150 x 14
STEEL POST

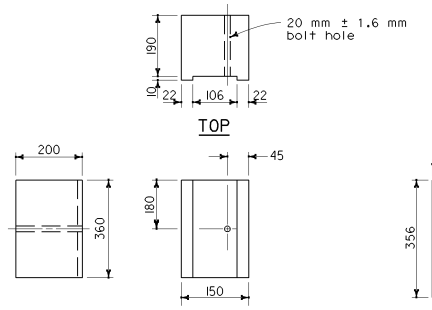

SIDE FRONT

150 mm x 200 mm
NOTCHED WOOD BLOCK
See Notes 2 and 3

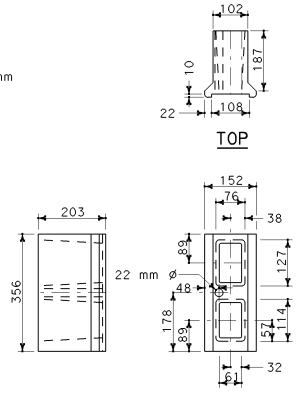

SIDE FRONT

NOTCHED PLASTIC BLOCK
Option 'A'

NOTES

1. All holes in steel post shall be 21 mm dia maximum.
2. Dimensions shown for wood block are nominal.
3. Notched face of block faces steel post.
4. 2.13-meter length posts to be used for narrow roadway installation. See Standard Plan A77FA.

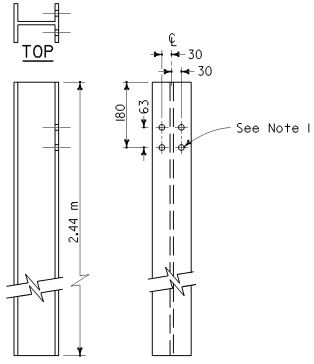

SIDE FRONT

MW 150 x 22
STEEL POST

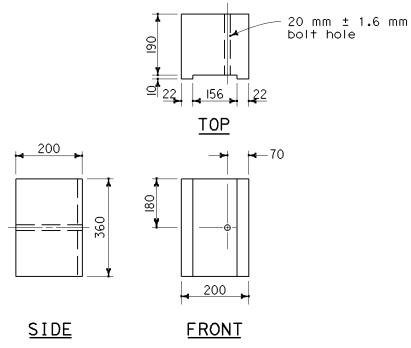

SIDE FRONT

200 mm x 200 mm
NOTCHED WOOD BLOCK
See Notes 2 and 3

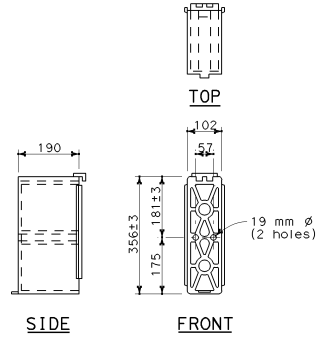

SIDE FRONT

NOTCHED PLASTIC BLOCK
Option 'B'

STATE OF CALIFORNIA
DEPARTMENT OF TRANSPORTATION

METAL BEAM GUARD RAILING STEEL POST, NOTCHED WOOD BLOCK AND NOTCHED PLASTIC BLOCK DETAILS

NO SCALE

ALL DIMENSIONS ARE IN MILLIMETERS UNLESS OTHERWISE SHOWN

A77C2

04-30-04

Back to Table of Contents

DIST	COUNTY	ROUTE	KILOMETER POST TOTAL PROJECT	SHEET NO.	TOTAL SHEETS

Caltrans Metric

REGISTERED CIVIL ENGINEER

July 1, 2004
PLANS APPROVAL DATE

REGISTERED PROFESSIONAL ENGINEER Ellis K. Hirst No. C17926 Exp. 6-30-05 CIVIL STATE OF CALIFORNIA

The State of California or its officers or agents shall not be responsible for the accuracy or completeness of electronic copies of this plan sheet.

To get to the Caltrans web site, go to: http://www.dot.ca.gov

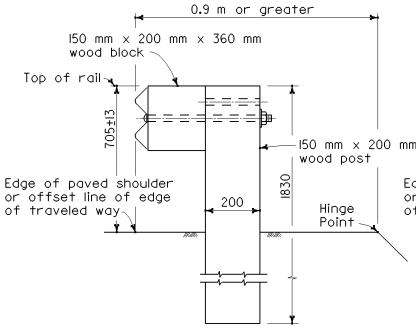

DETAIL A
TYPICAL ROADWAY INSTALLATION
See Note 1

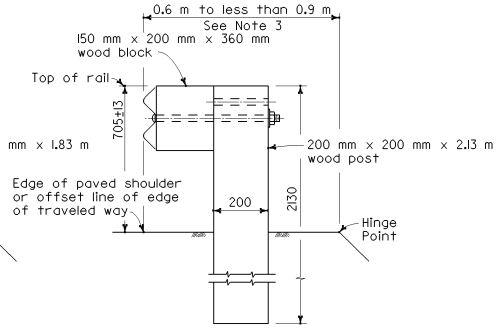

DETAIL B
NARROW ROADWAY INSTALLATION
See Note 1

POST EMBEDMENT

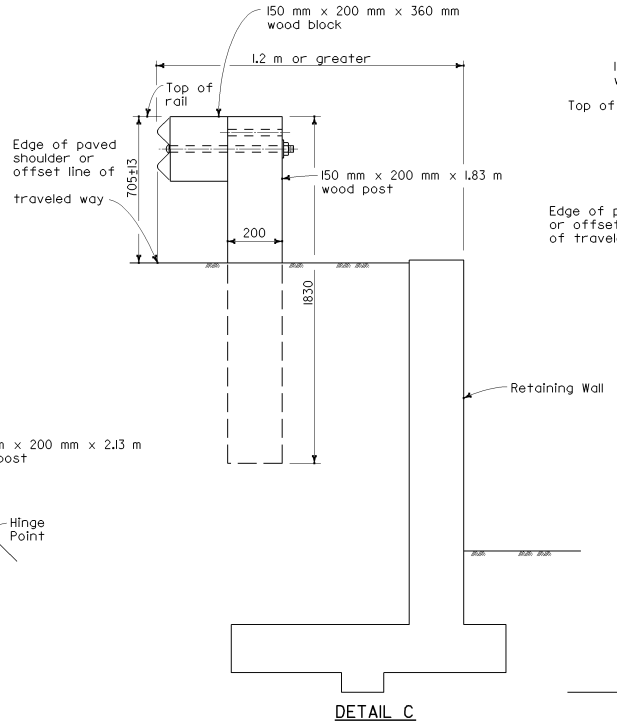

DETAIL C

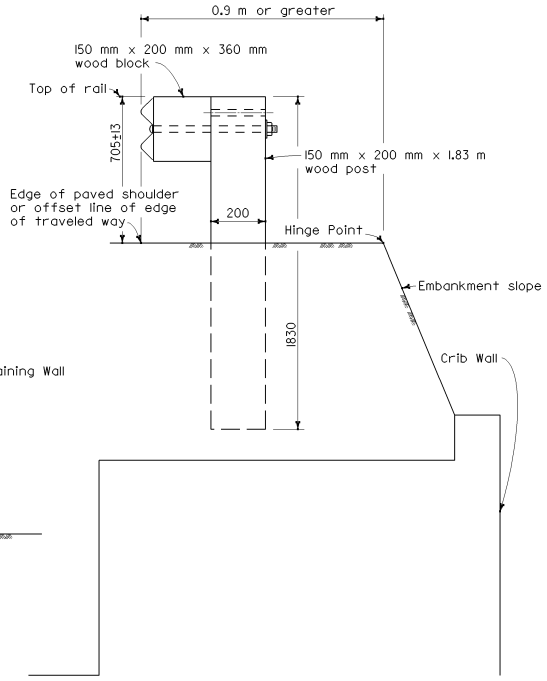

DETAIL D

INSTALLATION AT EARTH RETAINING WALLS

NOTES

1. These installation details also applicable to steel line post installations with notched blocks. For additional installation details, see Standard Plans A77A1 and A77A2.
2. Where the distance between the face of the rail and the hinge point is less than 0.6 m, see the Project Plans for special details.
3. For dike positioning with guard railing installations, see Standard Plan A77C4.

STATE OF CALIFORNIA
DEPARTMENT OF TRANSPORTATION

METAL BEAM GUARD RAILING TYPICAL LINE POST EMBEDMENT AND HINGE POINT OFFSET DETAILS

NO SCALE

ALL DIMENSIONS ARE IN MILLIMETERS UNLESS OTHERWISE SHOWN

A77C3

2004 Std PLAN A77C3

04-30-04

Back to Table of Contents

NOTES

1. When necessary to place dike in front of face of guard railing, only Type C dike may be used. For dike details, see Standard Plan A87A.
2. For standard railing post embedment, see Standard Plans A77C3.
3. Guard railing delineation to be used where shown on the Project Plans.
4. When dike or curb is placed under guard railing, the maximum height of the dike or curb shall be 100 mm. Mountable dike should not be used. For dike and curb details, see Standard Plans A87A and A87B.
5. For details of typical distance between the face of rail and hinge point, see Standard Plan A77C3.

Caltrans Metric

DIST	COUNTY	ROUTE	KILOMETER POST TOTAL PROJECT	SHEET NO.	TOTAL SHEETS

REGISTERED CIVIL ENGINEER

July 1, 2004
PLANS APPROVAL DATE

REGISTERED PROFESSIONAL ENGINEER Ellis K. Hirst No. C17926 Exp. 6-30-05 CIVIL STATE OF CALIFORNIA

The State of California or its officers or agents shall not be responsible for the accuracy or completeness of electronic copies of this plan sheet.

To get to the Caltrans web site, go to: http://www.dot.ca.gov

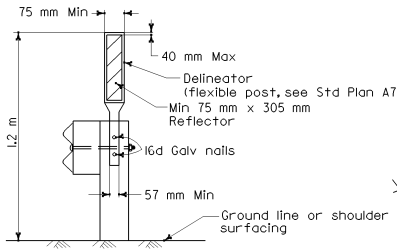

GUARD RAILING DELINEATION
See Note 3

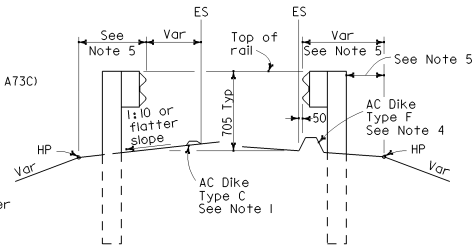

DIKE POSITIONING
See Note 1

STATE OF CALIFORNIA
DEPARTMENT OF TRANSPORTATION

METAL BEAM GUARD RAILING TYPICAL RAILING DELINEATION AND DIKE POSITIONING DETAILS

NO SCALE

ALL DIMENSIONS ARE IN MILLIMETERS UNLESS OTHERWISE SHOWN

A77C4

2004 Std PLAN A77C4

04-30-04

Back to Table of Contents

RAILING AT STRUCTURES

See Notes 10 AND 11

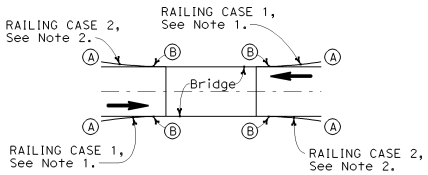

"DIAGRAM 1"
TWO-WAY HIGHWAY BRIDGE ROADBED WIDTH LESS THAN 12 METERS

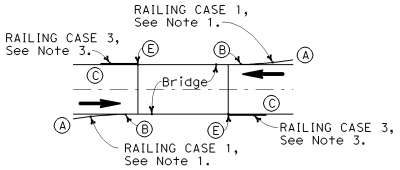

"DIAGRAM 2"
TWO-WAY HIGHWAY BRIDGE ROADBED WIDTH EQUAL TO OR GREATER THAN 12 METERS

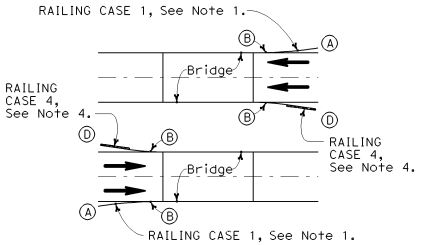

"DIAGRAM 3"
MULTILANE HIGHWAY WITH SEPARATE STRUCTURE FOR EACH DIRECTION OF TRAVEL

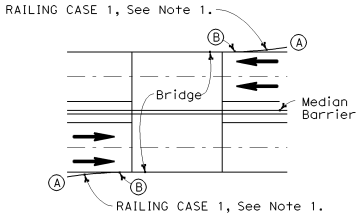

"DIAGRAM 4"
MULTILANE HIGHWAY WITH DECKED MEDIAN ON STRUCTURE

RAILING AT FIXED OBJECTS OR EMBANKMENT INSTALLATIONS

See Notes 9 and 11

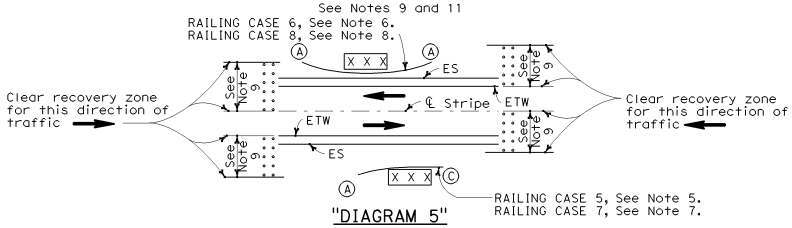

"DIAGRAM 5"
TWO-WAY HIGHWAY

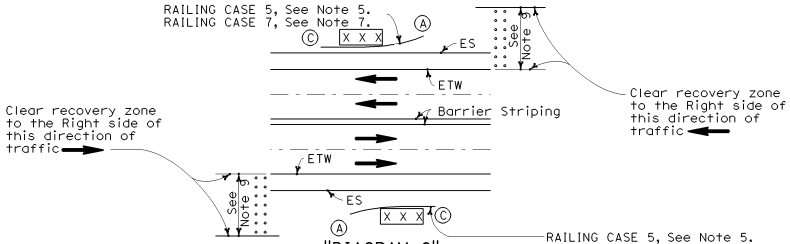

"DIAGRAM 6"
TWO-WAY MULTILANE HIGHWAY WITH BARRIER STRIPING

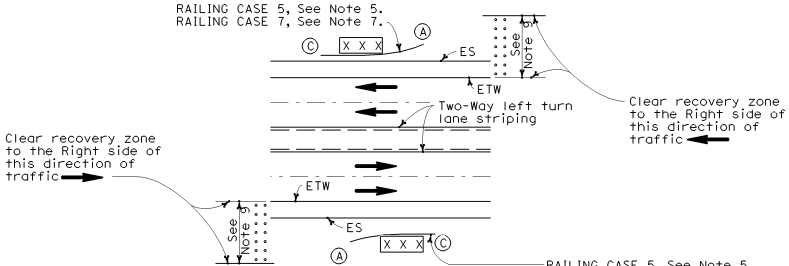

"DIAGRAM 7"
TWO-WAY MULTILANE HIGHWAY WITH TWO-WAY LEFT TURN LANE STRIPING

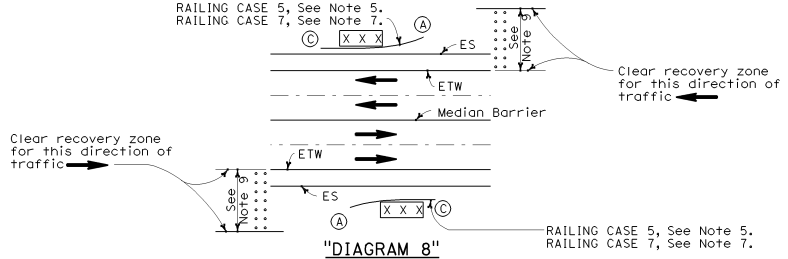

"DIAGRAM 8"
TWO-WAY MULTILANE HIGHWAY WITH MEDIAN BARRIER

Caltrans Metric

DIST	COUNTY	ROUTE	KILOMETER POST TOTAL PROJECT	SHEET NO.	TOTAL SHEETS

REGISTERED CIVIL ENGINEER

July 1, 2004
PLANS APPROVAL DATE

REGISTERED PROFESSIONAL ENGINEER Ellis K. Hirst No. C17926 Exp. 6-30-05 CIVIL STATE OF CALIFORNIA

The State of California or its officers or agents shall not be responsible for the accuracy or completeness of electronic copies of this plan sheet.

To get to the Caltrans web site, go to: http://www.dot.ca.gov

NOTES:

1. Where railing is constructed to shield the ends of structures for the conditions shown in RAILING CASE 1 on DIAGRAM Nos. 1, 2, 3 and 4, Layout Types 12A or 12B shown on Standard Plan A77F1 or Layout Type 12C shown on Standard Plan A77F2 are typically used.
2. Where railing is constructed to shield the ends of structures for the conditions shown in RAILING CASE 2 on DIAGRAM No. 1, Layout Types 12AA or 12BB shown on Standard Plan A77F4 or Layout Type 12CC shown on Standard Plan A77F5 are typically used.
3. Where railing is constructed at the ends of structures for the conditions shown in RAILING CASE 3 on DIAGRAM No. 2, Layout Type 12DD shown on Standard Plan A77F5 is typically used.
4. Where railing is constructed to shield the ends of structures for the conditions shown in RAILING CASE 4 on DIAGRAM No.3, Layout Type 12E shown on Standard Plan A77F3 is typically used where median barrier is not constructed. See Standard Plan A77D2 where median barrier is provided.
5. Where construction of railing is recommended to shield embankment slopes for the conditions shown in RAILING CASE 5 on DIAGRAM Nos. 5, 6, 7 and 8, Layout Types 11A, or 11B or 11C shown on Standard Plan A77E1 are typically used.
6. Where construction of railing is recommended to shield embankment slopes for the conditions shown in RAILING CASE 6 on DIAGRAM No. 5, one of the series of Layout Types (11D through 11L) shown on the A77E Series of Standard Plans are typically used. The layout type to be used is dependent on site specific conditions.
7. Where construction of railing is recommended to shield fixed object(s) for the condition shown in RAILING CASE 7 on DIAGRAM Nos. 5, 6, 7 and 8, Layout Types 16A, 16B or 16C shown on Standard Plan A77G3 are typically used.
8. Where construction of railing is recommended to shield fixed objects for the conditions shown in RAILING CASE 8 on DIAGRAM No. 5, one of the series of Layout Types (16D through 16L) shown on Standard Plan A77G Series of Standard Plan are typically used. The layout type to be used is dependent on site specific conditons.
9. Clear recovery zone is 6 m for Conventional Highways and 9 m for Expressways or Freeways.
10. See Standard Plan A77D2 for additional guard railing at structure placement diagrams.
11. These diagrams are not intended to provide geometric design standard guidance. See the Highway Design Manual for this type of guidance.

LEGEND

- (A) Caltrans approved end treatment or buried post end anchor.
- (B) Transition railing with anchorage to structure.
- (C) Railing end anchor assembly.
- (D) Caltrans approved crash cushion or end-treatment.
- (E) Positive anchorage to structure.
- X X X Fixed object(s) or non-recoverable embankment slope.

STATE OF CALIFORNIA
DEPARTMENT OF TRANSPORTATION

METAL BEAM GUARD RAILING AT STRUCTURES, FIXED OBJECTS AND EMBANKMENTS (PLACEMENT DIAGRAMS)

NO SCALE

ALL DIMENSIONS ARE IN MILLIMETERS UNLESS OTHERWISE SHOWN

A77D1

2004 Std PLAN A77D1

05-10-04

Back to Table of Contents

DIST	COUNTY	ROUTE	KILOMETER POST TOTAL PROJECT	SHEET NO.	TOTAL SHEETS

Caltrans Metric

REGISTERED CIVIL ENGINEER

July 1, 2004
PLANS APPROVAL DATE

REGISTERED PROFESSIONAL ENGINEER
Ellis K. Hirst
No. C17926
Exp. 6-30-05
CIVIL
STATE OF CALIFORNIA

The State of California or its officers or agents shall not be responsible for the accuracy or completeness of electronic copies of this plan sheet.

To get to the Caltrans web site, go to: http://www.dot.ca.gov

GUARD RAILING AND METAL BARRIER RAILING AT STRUCTURE APPROACHES AND DEPARTURES

See Notes 5 and 6

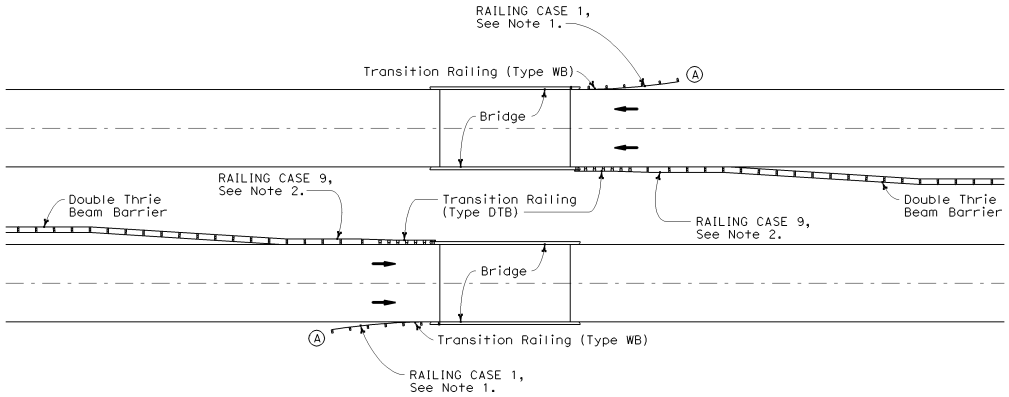

"DIAGRAM 9"
MULTILANE HIGHWAY WITH SEPARATE STRUCTURE
FOR EACH DIRECTION OF TRAVEL

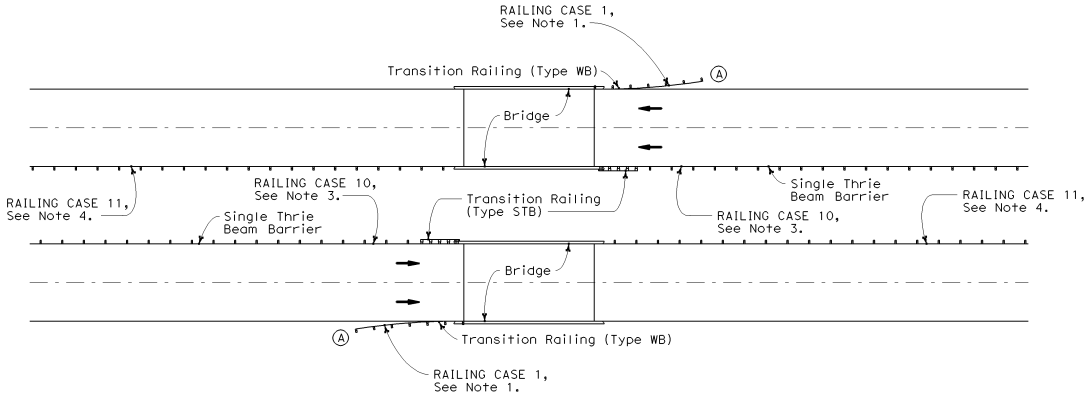

"DIAGRAM 10"
MULTILANE HIGHWAY WITH SEPARATE STRUCTURE
FOR EACH DIRECTION OF TRAVEL

NOTES:

1. Where guard railing is constructed to shield the ends of structures for the conditions shown in RAILING CASE 1 on DIAGRAM Nos. 9 and 10, Layout Types 12A or 12B shown on Standard Plan A77F1 or Layout Type 12C shown on Standard Plan A77F2 are typically used.
2. Where double thrie beam barrier railing is constructed to shield the ends of structures for the conditions shown in RAILING CASE 9 on DIAGRAM No. 9, Type 25A Connection Layout shown on Standard Plan A78H is typically used. For bridge railing connection details, see Standard Plans A78F1 and A78K.
3. Where single thrie beam barrier railing is constructed to shield the ends of structures for the conditions shown in RAILING CASE 10 on DIAGRAM No. 10, Type 25A Connection Layout shown on Standard Plan A78H is typically used. For bridge railing connection details, see Standard Plan A78J. Connection Detail 2A shown on Standard Plan A78F2 applies to the bridge railing connection.
4. Where single thrie beam barrier railing is constructed to shield opposing directions of traffic as shown in RAILING CASE 11 on DIAGRAM No. 10, Connection Detail 3A shown on Standard Plan A78F2 applies to the bridge railing connection.
5. See Standard Plan A77D1 for additional guard railing at structure placement diagrams.
6. These diagrams are not intended to provide geometric design standard guidance. See the Highway Design Manual for this type of guidance.

LEGEND

(A) Caltrans approved end treatment or buried post end anchor.

STATE OF CALIFORNIA
DEPARTMENT OF TRANSPORTATION

METAL BEAM GUARD RAILING AND THRIE BEAM BARRIER RAILING AT STRUCTURES (PLACEMENT DIAGRAMS)

NO SCALE

ALL DIMENSIONS ARE IN MILLIMETERS UNLESS OTHERWISE SHOWN

A77D2

2004 Std PLAN A77D2

05-13-04

Back to Table of Contents

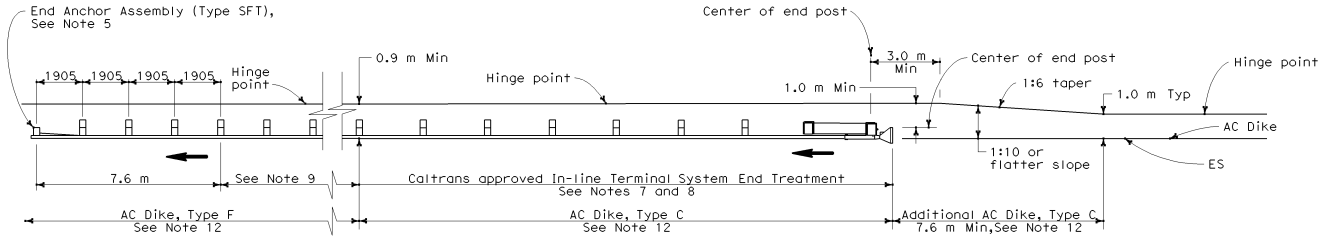

TYPE 11A LAYOUT

(EMBANKMENT GUARD INSTALLATION WITH IN-LINE END TREATMENT
AT TRAFFIC APPROACH END OF RAILING)
See Note 6

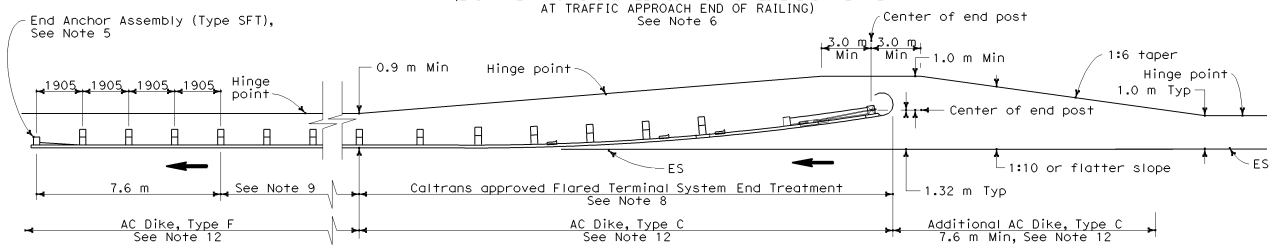

TYPE 11B LAYOUT

(EMBANKMENT GUARD RAILING INSTALLATION WITH FLARED END TREATMENT
AT TRAFFIC APPROACH END OF RAILING)
See Note 6

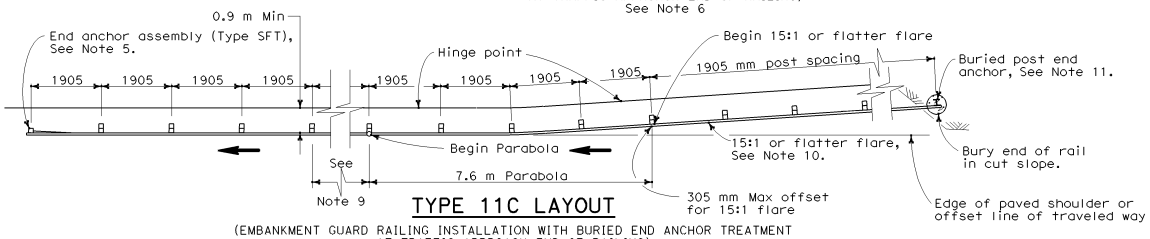

TYPE 11C LAYOUT

(EMBANKMENT GUARD RAILING INSTALLATION WITH BURIED END ANCHOR TREATMENT
AT TRAFFIC APPROACH END OF RAILING)
See Notes 6 and 12

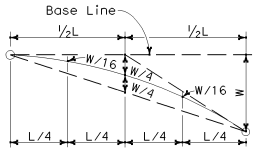

TYPICAL PARABOLIC LAYOUT

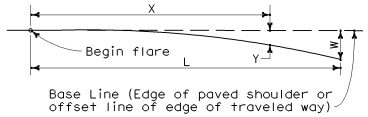

$$Y = \frac{WX^2}{L^2}$$

Y = Offset from base line
W = Maximum offset
X = Distance along base line
L = Length of flare

PARABOLIC FLARE OFFSETS

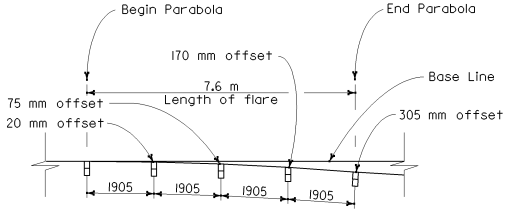

TYPICAL FLARE OFFSETS FOR 305 mm MAX END OFFSET

NOTES

1. Line post, blocks and hardware to be used are shown on Standard Plans A77A1, A77A2, A77B1, A77C1, and A77C2.
2. Guard rail post spacing to be 1905 mm center to center, except as otherwise noted.
3. Except as noted, line posts are 150 mm x 200 mm x 1.83 m wood with 150 mm x 200 mm x 360 mm wood blocks. MW 150 x 14 steel posts, 1.83 m in length, with 150 mm x 200 mm x 360 mm notched wood blocks or plastic blocks may be used for 150 mm x 200 mm x 1.83 m wood post with 150 mm x 200 mm x 360 mm wood blocks where applicable and when specified.
4. Direction of adjacent traffic indicated by ➡ .
5. For End Anchor Assembly (Type SFT) details, see Standard Plan A77H1.
6. Layout Types 11A, 11B or 11C are typically used where guard railing is recommended to shield embankment slopes and a crashworthy end treatment is required for only one direction of traffic. See Railing Case 5 in Diagram Nos. 5, 6, 7 and 8 on Standard Plan A77D1.
7. In-line Terminal System End Treatments are used where site conditions will not accommodate a flared end treatment.
8. The type of terminal system end treatment to be used will be shown on the Project Plans.
9. Dependent on site conditions (embankment height and side slope), construction of additional guard railing (length equal to multiples of 3.8 m with 1.9 m post spacing) may be advisable.
10. The 15:1 or flatter flare used with buried end anchors is based on the edge of the paved shoulder or offset line of edge of the traveled way. The length of guard railing within the 15:1 or flatter flare is based on site conditions and should be a length equal to multiples of 3.8 meters.
11. For details of the buried post end anchor used with Type 11C Layout, see Standard Plan A77I2.
12. Where placement of dike is required with guard railing installations, see Standard Plan A77C4 for dike positioning details.

Caltrans Metric

DIST	COUNTY	ROUTE	KILOMETER POST TOTAL PROJECT	SHEET NO.	TOTAL SHEETS

REGISTERED CIVIL ENGINEER
July 1, 2004
PLANS APPROVAL DATE

REGISTERED PROFESSIONAL ENGINEER Ellis K. Hirst No. C17926 Exp. 6-30-05 CIVIL STATE OF CALIFORNIA

The State of California or its officers or agents shall not be responsible for the accuracy or completeness of electronic copies of this plan sheet.

To get to the Caltrans web site, go to: http://www.dot.ca.gov

STATE OF CALIFORNIA
DEPARTMENT OF TRANSPORTATION

METAL BEAM GUARD RAILING TYPICAL LAYOUTS FOR EMBANKMENTS

NO SCALE

ALL DIMENSIONS ARE IN MILLIMETERS UNLESS OTHERWISE SHOWN

A77E1

08-11-04

2004 Std PLAN A77E1

Back to Table of Contents

DIST	COUNTY	ROUTE	KILOMETER POST TOTAL PROJECT	SHEET NO.	TOTAL SHEETS

Caltrans Metric

REGISTERED CIVIL ENGINEER

July 1, 2004
PLANS APPROVAL DATE

REGISTERED PROFESSIONAL ENGINEER Ellis K. Hirst No. C17926 Exp. 6-30-05 CIVIL STATE OF CALIFORNIA

The State of California or its officers or agents shall not be responsible for the accuracy or completeness of electronic copies of this plan sheet.

To get to the Caltrans web site, go to: http://www.dot.ca.gov

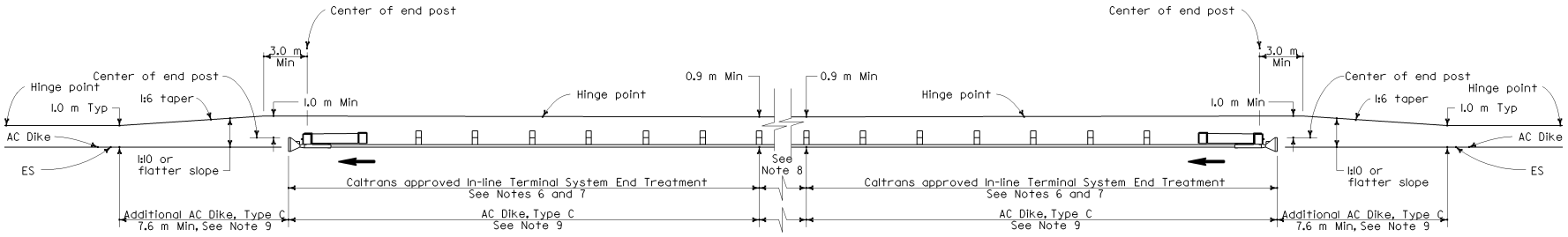

TYPE IID LAYOUT

(EMBANKMENT GUARD RAILING INSTALLATION WITH IN-LINE END TREATMENT AT EACH END OF RAILING)
See Note 5

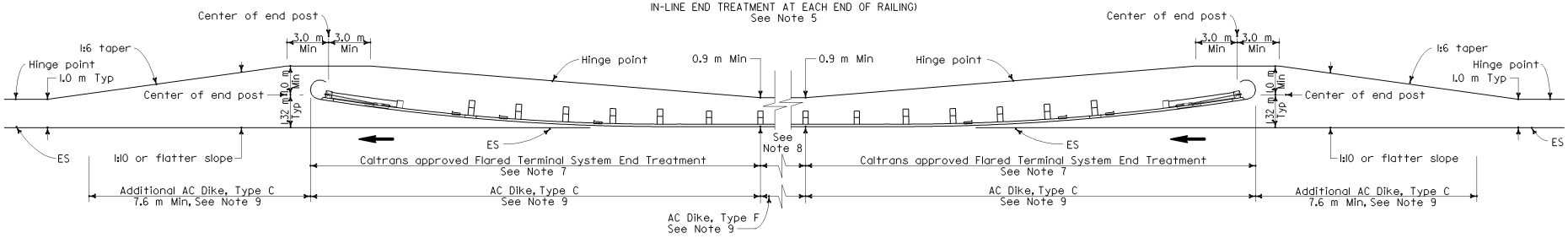

TYPE IIE LAYOUT

(EMBANKMENT GUARD RAILING INSTALLATION WITH FLARED END TREATMENT AT EACH END OF RAILING)
See Note 5

NOTES

1. Line post, blocks and hardware to be used are shown on Standard Plans A77A1, A77A2, A77B1, A77C1 and A77C2.
2. Guard rail post spacing to be 1905 mm center to center, except as otherwise noted.
3. Except as noted, line posts are 150 mm x 200 mm x 1.83 m wood with 150 mm x 200 mm x 360 mm wood blocks. MW 150 x 14 steel posts, 1.83 m in length, with 150 mm x 200 mm x 360 mm notched wood blocks or plastic blocks may be used for 150 mm x 200 mm x 1.83 m wood post with 150 mm x 200 mm x 360 mm wood blocks where applicable and when specified.
4. Direction of adjacent traffic indicated by ⟶ .
5. Layout Types 11D through 11L, shown on the A77E Series of Standard Plans, are typically used where guard railing is recommended to shield embankment slopes and a crashworthy end treatment is required for both directions of traffic. See Railing Case 6 in Diagram No. 5 on Standard Plan A77D1.
6. In-line Terminal System End Treatments are used where site conditions will not accommodate a flared end treatment.
7. The type of terminal system end treatment to be used will be shown on the Project Plans.
8. Dependent on site conditions (embankment height and side slope), construction of additional guard railing (length equal to multiples of 3.8 m with 1.9 m post spacing) may be advisable.
9. Where placement of dike is required with guard railing installations, see Standard Plan A77C4 for dike positioning details.

STATE OF CALIFORNIA
DEPARTMENT OF TRANSPORTATION

METAL BEAM GUARD RAILING TYPICAL LAYOUTS FOR EMBANKMENTS

NO SCALE

ALL DIMENSIONS ARE IN MILLIMETERS UNLESS OTHERWISE SHOWN

A77E2

2004 Std PLAN A77E2

05-24-04

Back to Table of Contents

DIST	COUNTY	ROUTE	KILOMETER POST TOTAL PROJECT	SHEET NO.	TOTAL SHEETS

Caltrans Metric

REGISTERED CIVIL ENGINEER

July 1, 2004
PLANS APPROVAL DATE

REGISTERED PROFESSIONAL ENGINEER Ellis K. Hirst No. C17926 Exp. 6-30-05 CIVIL STATE OF CALIFORNIA

The State of California or its officers or agents shall not be responsible for the accuracy or completeness of electronic copies of this plan sheet.

To get to the Caltrans web site, go to: http://www.dot.ca.gov

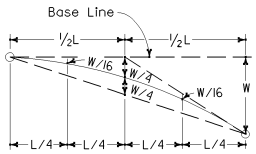

TYPICAL PARABOLIC LAYOUT

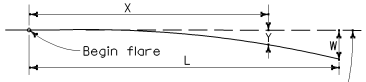

Base Line (Edge of paved shoulder or offset line of edge of traveled way)

$$Y = \frac{WX^2}{L^2}$$

Y = Offset from base line
W = Maximum offset
X = Distance along base line
L = Length of flare

PARABOLIC FLARE OFFSETS

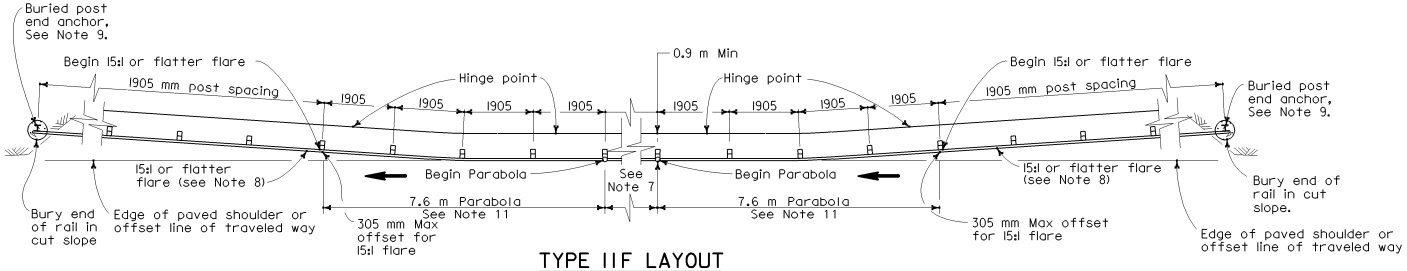

TYPE 11F LAYOUT

(EMBANKMENT GUARD RAILING INSTALLATION WITH A BURIED END ANCHOR TREATMENT AT EACH END OF RAILING)
See Notes 5 and 10

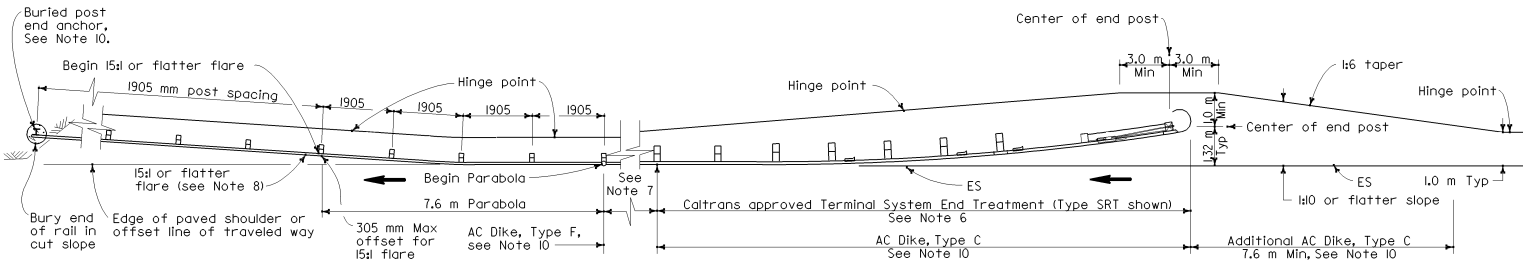

TYPE 11G LAYOUT

(EMBANKMENT GUARD RAILING INSTALLATION WITH FLARED END TREATMENT AND A BURIED END ANCHOR TREATMENT AT THE ENDS OF RAILING)
See Notes 5 and 10

NOTES

1. Line post, blocks and hardware to be used are shown on Standard Plans A77A1, A77A2, A77B1, A77C1 and A77C2.
2. Guard rail post spacing to be 1905 mm center to center, except as otherwise noted.
3. Except as noted, line posts are 150 mm x 200 mm x 1.83 m wood with 150 mm x 200 mm x 360 mm wood blocks. MW 150 x 14 steel posts, 1.83 m in length, with 150 mm x 200 mm x 360 mm notched wood blocks or plastic blocks may be used for 150 mm x 200 mm x 1.83 m wood post with 150 mm x 200 mm x 360 mm wood blocks where applicable and when specified.
4. Direction of adjacent traffic indicated by ⟶ .
5. Layout Types 11D through 11L, shown on the A77E Series of Standard Plans, are typically used where guard railing is recommended to shield embankment slopes and a crashworthy end treatment is required for both directions of traffic. See Railing Case 6 in Diagram No. 5 on Standard Plan A77D1
6. The type of terminal system end treatment to be used will be shown on the Project Plans.
7. Dependent on site conditions (embankment height and side slope), construction of additional guard railing (length equal to multiples of 3.8 m with 1.9 m post spacing) may be advisable.
8. The 15:1 or flatter flare used with buried end anchors is based on the edge of the paved shoulder or offset line of edge of the traveled way. The length of guard railing within the 15:1 or flatter flare is based on site conditions and should be a length equal to multiples of 3.8 meters.
9. For details of the buried post end anchor used with Type 11F and 11G Layouts, see Standard Plan A77I2.
10. Where placement of dike is required with guard railing installations, see Standard Plan A77C4 for dike positioning details.
11. For typical flare offsets for 7.6 m length parabola with maximum offset of 305 mm, see Standard Plan A77E1.

STATE OF CALIFORNIA
DEPARTMENT OF TRANSPORTATION

METAL BEAM GUARD RAILING TYPICAL LAYOUTS FOR EMBANKMENTS

NO SCALE

ALL DIMENSIONS ARE IN MILLIMETERS UNLESS OTHERWISE SHOWN

A77E3

08-09-04

2004 Std PLAN A77E3

Back to Table of Contents

DIST	COUNTY	ROUTE	KILOMETER POST TOTAL PROJECT	SHEET NO.	TOTAL SHEETS

Caltrans Metric

REGISTERED CIVIL ENGINEER

July 1, 2004
PLANS APPROVAL DATE

REGISTERED PROFESSIONAL ENGINEER
Ellis K. Hirst
No. C17926
Exp. 6-30-05
CIVIL
STATE OF CALIFORNIA

The State of California or its officers or agents shall not be responsible for the accuracy or completeness of electronic copies of this plan sheet.

To get to the Caltrans web site, go to: http://www.dot.ca.gov

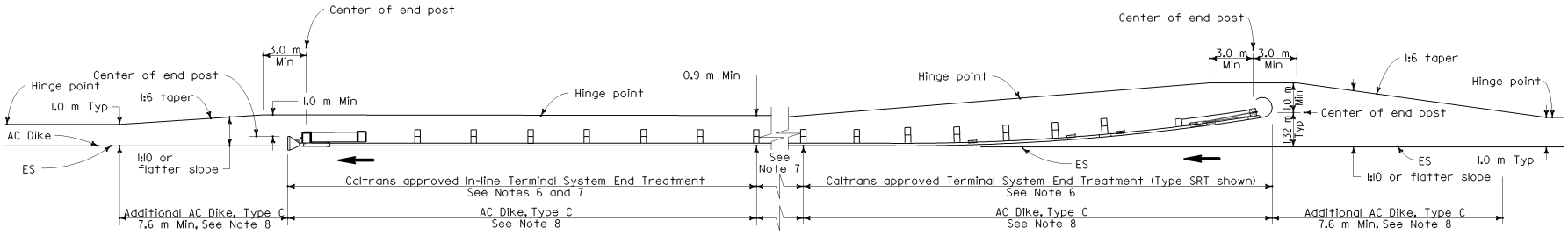

TYPE 11H LAYOUT

(EMBANKMENT GUARD RAILING INSTALLATION WITH FLARED END TREATMENT
AND AN IN-LINE TREATMENT AT THE ENDS OF RAILING)
See Notes 5 and 8

NOTES

1. Line post, blocks and hardware to be used are shown on Standard Plans A77A1, A77A2, A77B1, A77C1 and A77C2.
2. Guard rail post spacing to be 1905 mm center to center, except as otherwise noted.
3. Except as noted, line posts are 150 mm x 200 mm x 1.83 m wood with 150 mm x 200 mm x 360 mm wood blocks. MW 150 x 14 steel posts, 1.83 m in length, with 150 mm x 200 mm x 360 mm notched wood blocks or plastic blocks may be used for 150 mm x 200 mm x 1.83 m wood post with 150 mm x 200 mm x 360 mm wood blocks where applicable and when specified.
4. Direction of adjacent traffic indicated by ➡ .
5. Layout Types 11D through 11L, shown on the A77E Series of Standard Plans, are typically used where guard railing is recommended to shield embankment slopes and a crashworthy end treatment is required for both directions of traffic. See Railing Case 6 in Diagram No. 5 on Standard Plan A77D1
6. The type of terminal system end treatment to be used will be shown on the Project Plans.
7. Dependent on site conditions (embankment height and side slope), construction of additional guard railing (length equal to multiples of 3.8 m with 1.9 m post spacing) may be advisable.
8. Where placement of dike is required with guard railing installations, see Standard Plan A77C4 for dike positioning details.

STATE OF CALIFORNIA
DEPARTMENT OF TRANSPORTATION

METAL BEAM GUARD RAILING TYPICAL LAYOUTS FOR EMBANKMENTS

NO SCALE

ALL DIMENSIONS ARE IN MILLIMETERS UNLESS OTHERWISE SHOWN

A77E4

2004 Std PLAN A77E4

05-24-04

Back to Table of Contents

DIST	COUNTY	ROUTE	KILOMETER POST TOTAL PROJECT	SHEET NO.	TOTAL SHEETS

Caltrans Metric

REGISTERED CIVIL ENGINEER

July 1, 2004
PLANS APPROVAL DATE

REGISTERED PROFESSIONAL ENGINEER Ellis K. Hirst No. C17926 Exp. 6-30-05 CIVIL STATE OF CALIFORNIA

The State of California or its officers or agents shall not be responsible for the accuracy or completeness of electronic copies of this plan sheet.

To get to the Caltrans web site, go to: http://www.dot.ca.gov

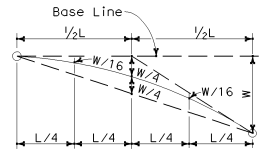

TYPICAL PARABOLIC LAYOUT

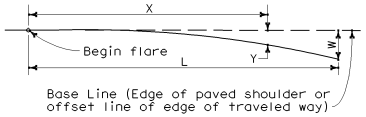

Base Line (Edge of paved shoulder or offset line of edge of traveled way)

$$Y = \frac{WX^2}{L^2}$$

Y = Offset from base line
W = Maximum offset
X = Distance along base line
L = Length of flare

PARABOLIC FLARE OFFSETS

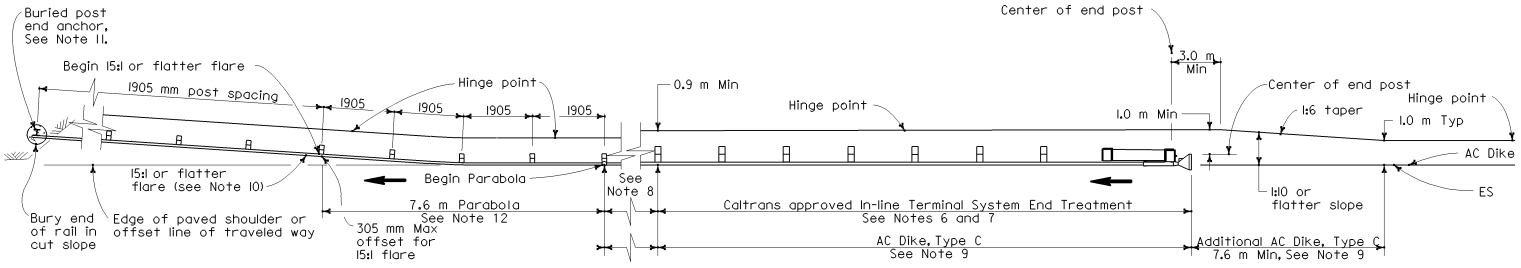

TYPE 11I LAYOUT

(EMBANKMENT GUARD RAILING INSTALLATION WITH IN-LINE END TREATMENT AND A BURIED END ANCHOR TREATMENT AT THE ENDS OF RAILING)
See Note 5

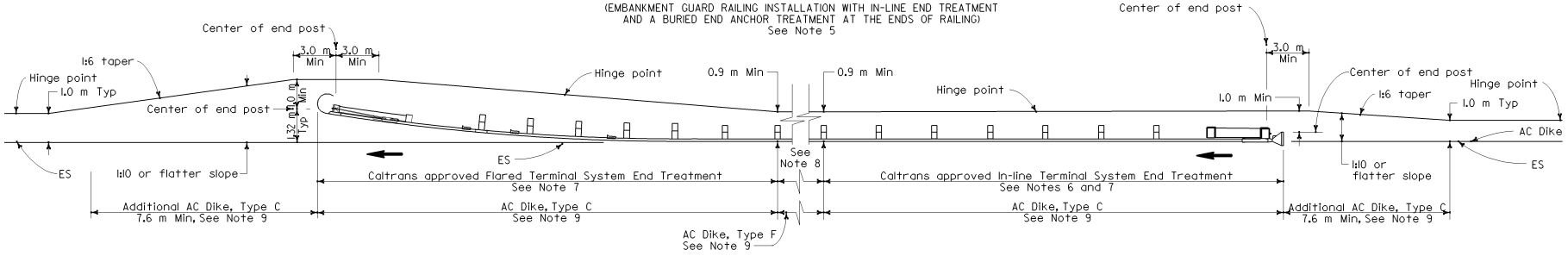

TYPE 11J LAYOUT

(EMBANKMENT GUARD RAILING INSTALLATION WITH IN-LINE END TREATMENT AND FLARED END TREATMENT AT THE ENDS OF RAILING)
See Note 5

NOTES

1. Line post, blocks and hardware to be used are shown on Standard Plans A77A1, A77A2, A77B1, A77C1 and A77C2.
2. Guard rail post spacing to be 1905 mm center to center, except as otherwise noted.
3. Except as noted, line posts are 150 mm x 200 mm x 1.83 m wood with 150 mm x 200 mm x 360 mm wood blocks. MW 150 x 14 steel posts, 1.83 m in length, with 150 mm x 200 mm x 360 mm notched wood blocks or plastic blocks may be used for 150 mm x 200 mm x 1.83 m wood post with 150 mm x 200 mm x 360 mm wood blocks where applicable and when specified.
4. Direction of adjacent traffic indicated by ⟶ .
5. Layout Types 11D through 11L, shown on the A77E Series of Standard Plans, are typically used where guard railing is recommended to shield embankment slopes and a crashworthy end treatment is required for both directions of traffic. See Railing Case 6 in Diagram No. 5 on Standard Plan A77D1.
6. In-line Terminal System End Treatments are used where site conditions will not accommodate a flared end treatment.
7. The type of terminal system end treatment to be used will be shown on the Project Plans.
8. Dependent on site conditions (embankment height and side slope), construction of additional guard railing (length equal to multiples of 3.8 m with 1.9 m post spacing) may be advisable.
9. Where placement of dike is required with guard railing installations, see Standard Plan A77C4 for dike positioning details.
10. The 15:1 or flatter flare used with buried end anchors is based on the edge of the paved shoulder or offset line of edge of the traveled way. The length of guard railing within the 15:1 or flatter flare is based on site conditions and should be a length equal to multiples of 3.8 meters.
11. For details of the buried post end anchor used with Type 11I Layout, see Standard Plan A77I2.
12. For typical flare offsets for 7.6 m length parabola with maximum offset of 305 mm, see Standard Plan A77E1.

STATE OF CALIFORNIA
DEPARTMENT OF TRANSPORTATION

METAL BEAM GUARD RAILING TYPICAL LAYOUTS FOR EMBANKMENTS

NO SCALE

ALL DIMENSIONS ARE IN MILLIMETERS UNLESS OTHERWISE SHOWN

A77E5

08-09-04

Back to Table of Contents

DIST	COUNTY	ROUTE	KILOMETER POST TOTAL PROJECT	SHEET NO.	TOTAL SHEETS

Caltrans Metric

REGISTERED CIVIL ENGINEER

July 1, 2004
PLANS APPROVAL DATE

REGISTERED PROFESSIONAL ENGINEER Ellis K. Hirst No. C17926 Exp. 6-30-05 CIVIL STATE OF CALIFORNIA

The State of California or its officers or agents shall not be responsible for the accuracy or completeness of electronic copies of this plan sheet.

To get to the Caltrans web site, go to: http://www.dot.ca.gov

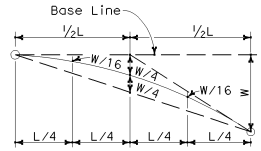

TYPICAL PARABOLIC LAYOUT

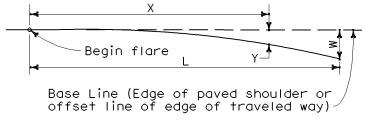

$$Y = \frac{WX^2}{L^2}$$

Y = Offset from base line
W = Maximum offset
X = Distance along base line
L = Length of flare

PARABOLIC FLARE OFFSETS

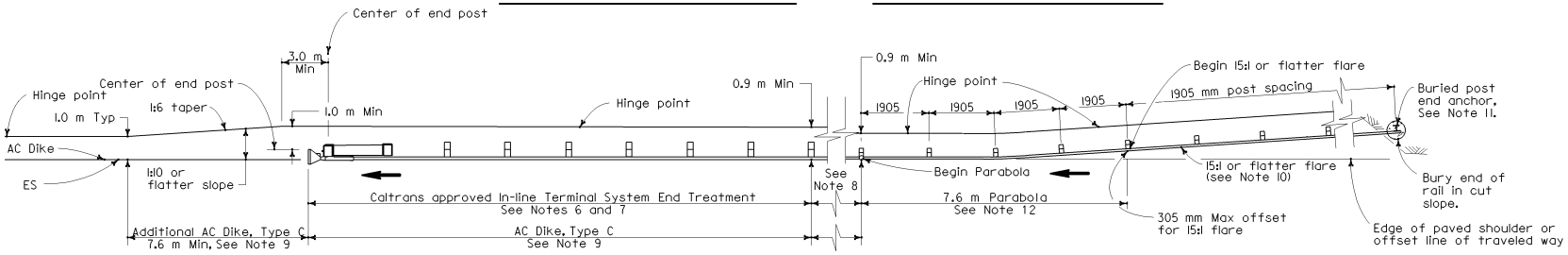

TYPE 11K LAYOUT

(EMBANKMENT GUARD RAILING INSTALLATION WITH A BURIED END ANCHOR TREATMENT AND AN IN-LINE END TREATMENT AT THE ENDS OF RAILING)
See Note 5

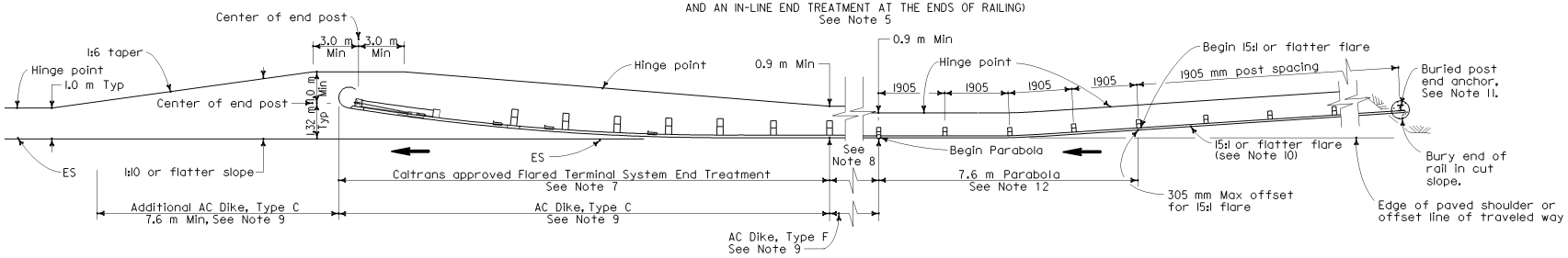

TYPE 11L LAYOUT

(EMBANKMENT GUARD RAILING INSTALLATION WITH A BURIED END ANCHOR TREATMENT AND A FLARED END TREATMENT AT THE ENDS OF RAILING)
See Note 5

NOTES

1. Line post, blocks and hardware to be used are shown on Standard Plans A77A1, A77A2, A77B1, A77C1 and A77C2.
2. Guard rail post spacing to be 1905 mm center to center, except as otherwise noted.
3. Except as noted, line posts are 150 mm x 200 mm x 1.83 m wood with 150 mm x 200 mm x 360 mm wood blocks. MW 150 x 14 steel posts, 1.83 m in length, with 150 mm x 200 mm x 360 mm notched wood blocks or plastic blocks may be used for 150 mm x 200 mm x 1.83 m wood post with 150 mm x 200 mm x 360 mm wood blocks where applicable and when specified.
4. Direction of adjacent traffic indicated by ⟶ .
5. Layout Types 11D through 11L, shown on the A77E Series of Standard Plans, are typically used where guard railing is recommended to shield embamkment slopes and a crashworthy end treatment is required for both directions of traffic. See Railing Case 6 in Diagram No. 5 on Standard Plan A77D1.
6. In-line Terminal System End Treatments are used where site conditions will not accommodate a flared end treatment.
7. The type of terminal system end treatment to be used will be shown on the Project Plans.
8. Dependent on site conditions (embankment height and side slope), construction of additional guard railing (length equal to multiples of 3.8 m with 1.9 m post spacing) may be advisable.
9. Where placement of dike is required with guard railing installations, see Standard Plan A77C4 for dike positioning details.
10. The 15:1 or flatter flare used with buried end anchors is based on the edge of the paved shoulder or offset line of edge of the traveled way. The length of guard railing within the 15:1 or flatter flare is based on site conditions and should be a length equal to multiples of 3.8 meters.
11. For details of the buried post end anchor used with Type 11K and 11L Layouts, see Standard Plan A77I2.
12. For typical flare offsets for 7.6 m length parabola with maximum offset of 305 mm, see Standard Plan A77E1.

STATE OF CALIFORNIA
DEPARTMENT OF TRANSPORTATION

METAL BEAM GUARD RAILING TYPICAL LAYOUTS FOR EMBANKMENTS

NO SCALE

ALL DIMENSIONS ARE IN MILLIMETERS UNLESS OTHERWISE SHOWN

A77E6

08-09-04

Back to Table of Contents

DIST	COUNTY	ROUTE	KILOMETER POST TOTAL PROJECT	SHEET NO.	TOTAL SHEETS

Ellis K. Hirst
REGISTERED CIVIL ENGINEER

July 1, 2004
PLANS APPROVAL DATE

REGISTERED PROFESSIONAL ENGINEER Ellis K. Hirst No. C17926 Exp. 6-30-05 CIVIL STATE OF CALIFORNIA

The State of California or its officers or agents shall not be responsible for the accuracy or completeness of electronic copies of this plan sheet.

To get to the Caltrans web site, go to: http://www.dot.ca.gov

Caltrans Metric

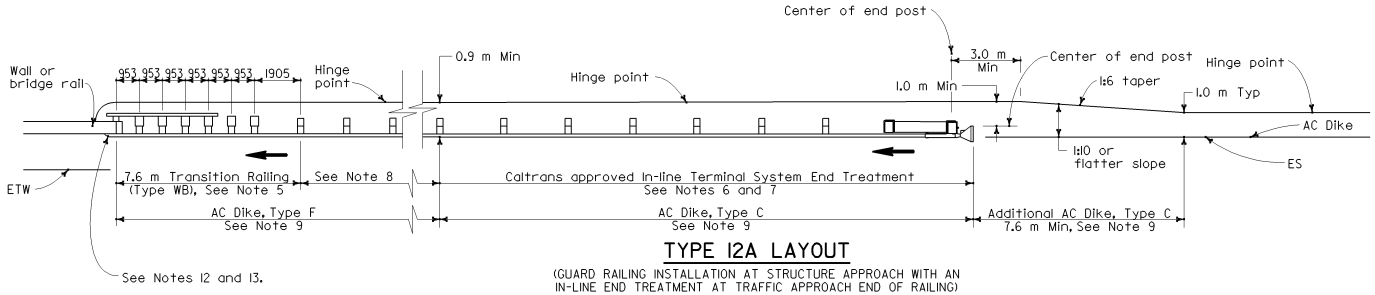

TYPE 12A LAYOUT

(GUARD RAILING INSTALLATION AT STRUCTURE APPROACH WITH AN IN-LINE END TREATMENT AT TRAFFIC APPROACH END OF RAILING)
See Notes 10

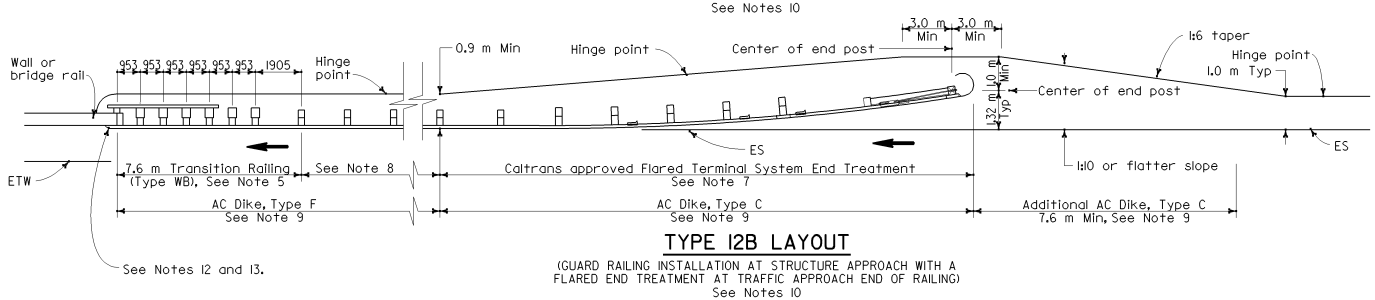

TYPE 12B LAYOUT

(GUARD RAILING INSTALLATION AT STRUCTURE APPROACH WITH A FLARED END TREATMENT AT TRAFFIC APPROACH END OF RAILING)
See Notes 10

NOTES

1. Line post, blocks and hardware to be used are shown on Standard Plans A77A1, A77A2, A77B1, A77C1 and A77C2.
2. Guard rail post spacing to be 1905 mm center to center, except a otherwise noted.
3. Except as noted, line posts are 150 mm x 200 mm x 1.83 m wood with 150 mm x 200 mm x 360 mm wood blocks. MW 150 x 14 steel posts, 1.83 m in length, with 150 mm x 200 mm x 360 mm notched wood blocks or plastic blocks may be used for 150 mm x 200 mm x 1.83 wood posts with 150 mm x 200 mm x 360 mm wood blocks where applicable and when specified.
4. Direction of adjacent traffic indicated by ➡ .
5. For Transition Railing (Type WB) details for Types 12A and 12B Layouts, see Standard Plan A77J4.
6. In-line Terminal System End Treatments are used where site conditions will not accommodate a flared end treatment.
7. The type of terminal system end treatment to be used will be shown on the Project Plans.
8. Dependent on site conditions (embankment height, side slopes, or other fixed objects), it may be advisable to construct additional guard railing (a length equal to multiples of 3.8 m with 1.9 m post spacing) between the transition railing and end treatment.
9. Where placement of dike is required with guard railing installations, see Standard Plan A77C4 for dike positioning details.
10. Type 12A or Type 12B Layouts are typically used:
    a. To the right of approaching traffic, at the end of a structure, on two-lane conventional highway where the roadbed width across the structure is less than 12 meters. See Railing Case 1 in Diagram No. 1 on Standard Plan A77D1.
    b. To the left of approaching traffic, at the end of a structure, on two-lane conventional highway where the roadbed width across the structure is less than 12 meters. See Railing Case 2 in Diagram No. 1 on Standard Plan A77D1.
    c. To the right of approaching traffic at the end of each structure on multilane freeways or expressways with separate adjacent or parallel bridges. See Railing Case 1 in Diagram No. 3 on Standard Plan A77D1.
    d. To the right of approaching traffic at the end of the structure on multilane freeways or expressways with decked median on the bridge. See Railing Case 1 in Diagram No. 4 on Standard Plan A77D1.
11. See Standard Plan A77F3 for typical layout used left of approaching traffic at the ends of each structure on multilane freeways or expressways with separate adjacent or parallel bridges. See RAILING CASE 4 in Diagrams No. 3 on Standard Plan A77D1.
12. For additional details of typical connections to bridge rail, see Connection Detail AA on Standard Plans A77J1 and A77J2 and Connection Detail FF on Standard Plans A77K1 and A77K2.
13. For additional details of a typical connection to walls or abutments, see Standard Plan A77J3.

STATE OF CALIFORNIA
DEPARTMENT OF TRANSPORTATION

METAL BEAM GUARD RAILING TYPICAL LAYOUTS FOR STRUCTURE APPROACH

NO SCALE

ALL DIMENSIONS ARE IN MILLIMETERS UNLESS OTHERWISE SHOWN

A77F1

04-30-04

2004 Std PLAN A77F1

Back to Table of Contents

DIST	COUNTY	ROUTE	KILOMETER POST TOTAL PROJECT	SHEET NO.	TOTAL SHEETS

Caltrans Metric

REGISTERED CIVIL ENGINEER

July 1, 2004
PLANS APPROVAL DATE

REGISTERED PROFESSIONAL ENGINEER Ellis K. Hirst No. C17926 Exp. 6-30-05 CIVIL STATE OF CALIFORNIA

The State of California or its officers or agents shall not be responsible for the accuracy or completeness of electronic copies of this plan sheet.

To get to the Caltrans web site, go to: http://www.dot.ca.gov

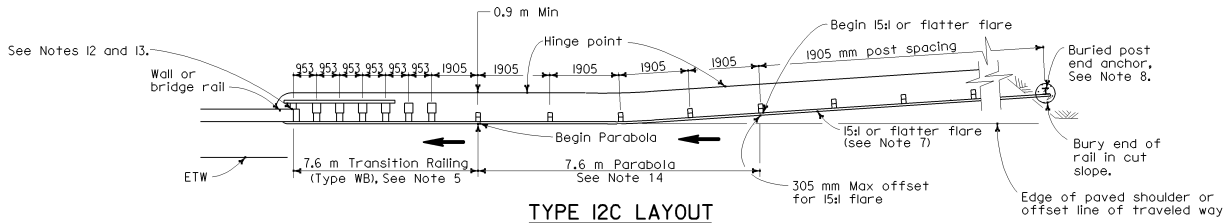

TYPE 12C LAYOUT

(GUARD RAILING INSTALLATION AT STRUCTURE APPROACH WITH A BURIED END ANCHOR TREATMENT AT TRAFFIC APPROACH END OF RAILING)
See Notes 9 and 10

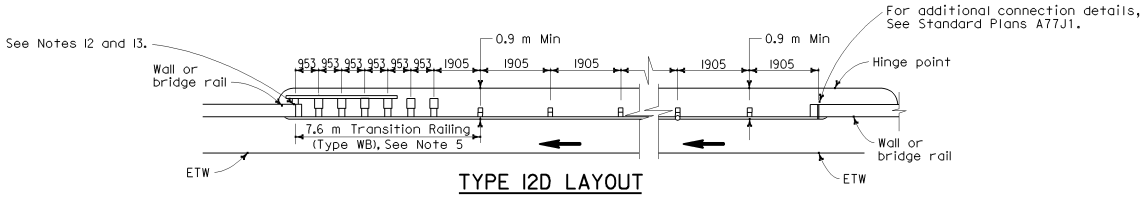

TYPE 12D LAYOUT

(CONTINUOUS GUARD RAILING INSTALLATION BETWEEN STRUCTURES)
See Notes 6 and 10

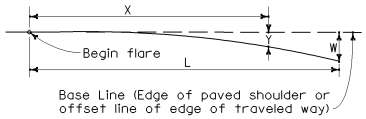

$$Y = \frac{WX^2}{L^2}$$

Y = Offset from base line
W = Maximum offset
X = Distance along base line
L = Length of flare

PARABOLIC FLARE OFFSETS

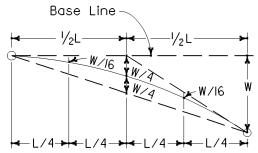

TYPICAL PARABOLIC LAYOUT

NOTES

1. Line post, blocks and hardware to be used are shown on Standard Plans A77A1, A77A2, A77B1, A77C1 and A77C2.
2. Guard rail post spacing to be 1905 mm center to center, except as otherwise noted.
3. Except as noted, line posts are 150 mm x 200 mm x 1.83 m wood with 150 mm x 200 mm x 360 mm wood blocks. MW 150 x 14 steel posts, 1.83 m in length, with 150 mm x 200 mm x 360 mm notched wood blocks or plastic blocks may be used for 150 mm x 200 mm x 1.83 wood posts with 150 mm x 200 mm x 360 mm wood blocks where applicable and when specified.
4. Direction of adjacent traffic indicated by ➡ .
5. For Transition Railing (Type WB) details for Types 12C and 12D Layouts, see Standard Plan A77J4.
6. Type 12D layout is typically used where continous guard railing is recommended between structures.
7. The 15:1 or flatter flare for Type 12C Layout is based on the edge of the paved shoulder or offset line of edge of the traveled way. The length of guard railing with the 15:1 or flatter flare is based on site conditions and should be a length equal to multiples of 3.8 meters.
8. For details of the buried post end anchor used with Type 12C Layout, see Standard Plan A77I2.
9. Where placement of dike is required with guard railing installations, see Standard Plan A77C4 for dike positioning details.
10. Type 12C Layout is typically used:
    a. To the right of approaching traffic, at the end of the structure, on two-lane conventional highway where the roadbed width across the structure is less than 12 meters. See Railing Case 1 in Diagram No. 1 on Standard Plan A77D1.
    b. To the left of approaching traffic, at each of a structure, on two-lane conventional highway where the roadbed width across the structure is less than12 meters. See Railing Case 2 in Diagram No. 1 on Standard Plan A77D1.
    c. To the right of approaching traffic at the end of each structure on multilane freeways or expressways with separate adjacent or parallel bridges. See Railing Case 1 in Diagram No. 3 on New Standard Plan A77D1.
    d. To the right of approaching traffic at the end of the structure on multilane freeways or expressways with decked median on the bridge. See Railing Case 1 in Diagram No. 4 on Standard Plan A77D1.
11. See Standard Plan A77F3 for typical layout used left of approaching traffic at the ends of each structure on multilane freeways or expressways with separate adjacent or parallel bridges. See RAILING CASE 4 in Diagram No. 3 on Standard Plan A77D1.
12. For additional details of typical connections to bridge rail, see Connection Detail AA on Standard Plans A77J1 and A77J2 and Connection Detail FF on Standard Plans A77K1 and A77K2.
13. For additional details of a typical connection to walls or abutments, see Standard Plan A77J3.
14. For typical flare offsets for 7.6 m length parabola with maximum offset of 305 mm, see Standard Plan A77E1.

STATE OF CALIFORNIA
DEPARTMENT OF TRANSPORTATION

METAL BEAM GUARD RAILING TYPICAL LAYOUTS FOR STRUCTURE APPROACH AND BETWEEN STRUCTURES

NO SCALE

ALL DIMENSIONS ARE IN MILLIMETERS UNLESS OTHERWISE SHOWN

A77F2

2004 Std PLAN A77F2

08-09-04

Back to Table of Contents

NOTES

1. Line post, blocks and hardware to be used are shown on Standard Plans A77A1, A77A2, A77B1, A77C1 and A77C2.
2. Guard railing post spacing to be 1905 mm center to center, except as otherwise noted.
3. Except as noted, line posts are 150 mm x 200 m x 1.83 m wood with 150 mm x 200 mm x 360 mm wood blocks. MW 150 x 14 steel posts, 1.83 m in length, with 150 mm x 200 mm x 360 mm notched wood blocks or plastic blocks may be used for 150 mm x 200 mm x 1.83 m wood posts with 150 mm x 200 mm x 360 mm wood blocks where applicable and when specified.
4. Direction of adjacent traffic indicated by ➡ .
5. For Transition Railing (Type WB) details, see Standard Plan A77J4.
6. For additional details of a typical connection to bridge rail, see Connection Detail AA on Standard Plan A77J1.
7. For Rail Tensioning Assembly details, see Standard Plan A77H2.
8. For details of crash cushions, see the A82A Series of the Standard Plans.
9. The type of Crash Cushion to be used will be shown on the Project Plans.
10. Type 12E Layout is typically used left of approaching traffic at the end of each structure on multilane freeways or expressways where a median type barrier is not constructed between separated roadbeds. See Railing Case 4 in Diagram No. 3 on Standard Plan A77D1.

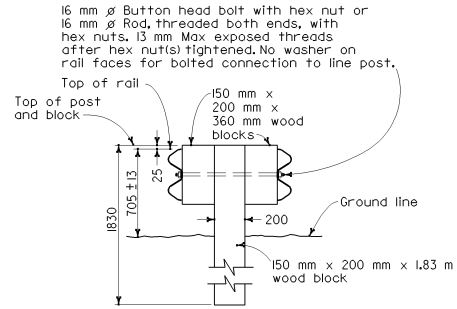

SECTION A-A

TYPICAL DOUBLE METAL BEAM GUARD RAILING

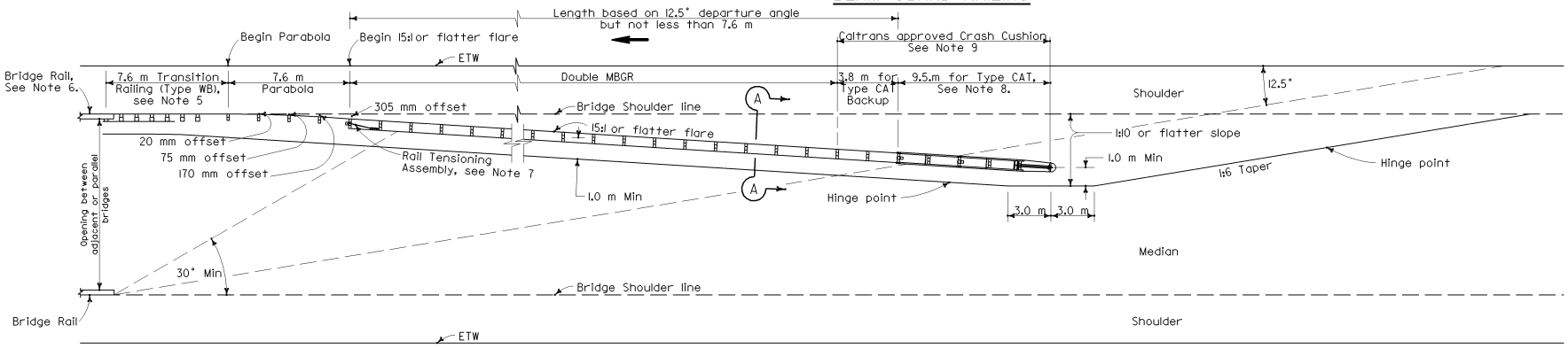

TYPE 12E LAYOUT

See Note 10

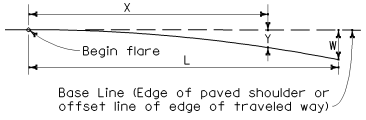

$$Y = \frac{WX^2}{L^2}$$

Y = Offset from base line
W = Maximum offset
X = Distance along base line
L = Length of flare

PARABOLIC FLARE OFFSETS

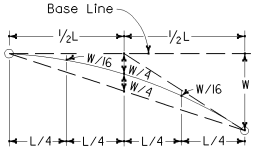

TYPICAL PARABOLIC LAYOUT

STATE OF CALIFORNIA
DEPARTMENT OF TRANSPORTATION

METAL BEAM GUARD RAILING TYPICAL LAYOUTS FOR STRUCTURE APPROACH

NO SCALE

ALL DIMENSIONS ARE IN MILLIMETERS UNLESS OTHERWISE SHOWN

A77F3

Caltrans Metric

DIST	COUNTY	ROUTE	KILOMETER POST TOTAL PROJECT	SHEET NO.	TOTAL SHEETS

REGISTERED CIVIL ENGINEER

July 1, 2004
PLANS APPROVAL DATE

REGISTERED PROFESSIONAL ENGINEER Ellis K. Hirst No. C17926 Exp. 6-30-05 CIVIL STATE OF CALIFORNIA

The State of California or its officers or agents shall not be responsible for the accuracy or completeness of electronic copies of this plan sheet.

To get to the Caltrans web site, go to: http://www.dot.ca.gov

2004 Std PLAN A77F3

05-24-04

Back to Table of Contents

DIST	COUNTY	ROUTE	KILOMETER POST TOTAL PROJECT	SHEET NO.	TOTAL SHEETS

Ellis K. Hirst
REGISTERED CIVIL ENGINEER

July 1, 2004
PLANS APPROVAL DATE

REGISTERED PROFESSIONAL ENGINEER
Ellis K.Hirst
No. C17926
Exp. 6-30-05
CIVIL
STATE OF CALIFORNIA

The State of California or its officers or agents shall not be responsible for the accuracy or completeness of electronic copies of this plan sheet.

To get to the Caltrans web site, go to: http://www.dot.ca.gov

Caltrans Metric

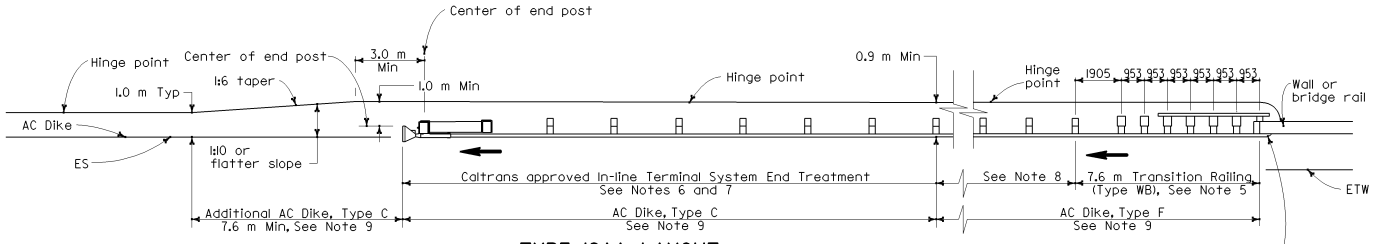

TYPE 12AA LAYOUT

(GUARD RAILING INSTALLATION AT STRUCTURE DEPARTURE WITH AN IN-LINE END TREATMENT AT TRAILING END OF RAILING)
See Notes 9 and 10

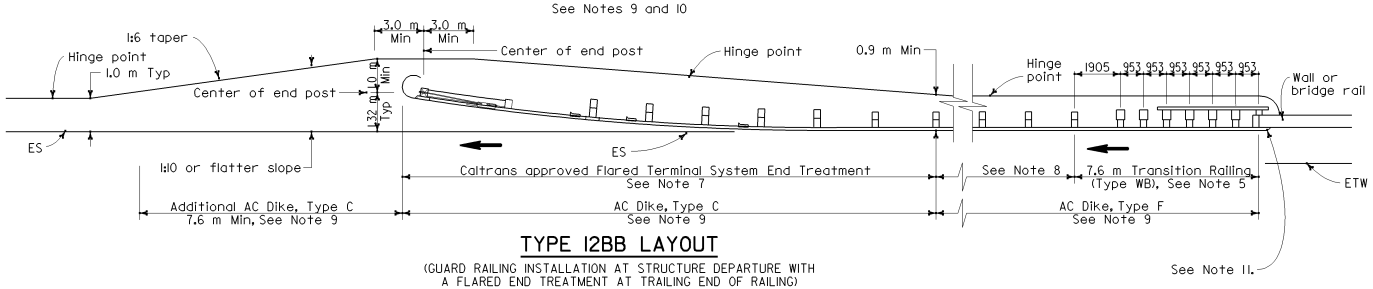

TYPE 12BB LAYOUT

(GUARD RAILING INSTALLATION AT STRUCTURE DEPARTURE WITH A FLARED END TREATMENT AT TRAILING END OF RAILING)
See Notes 9 and 10

NOTES

1. Line post, blocks and hardware to be used are shown on Standard Plans A77A1, A77A2, A77B1, A77C1 and A77C2.
2. Guard rail post spacing to be 1905 mm center to center, except as otherwise noted.
3. Except as noted, line posts are 150 mm x 200 mm x 1.83 m wood with 150 mm x 200 mm x 360 mm wood blocks. MW 150 x 14 steel posts, 1.83 m in length, with 150 mm x 200 mm x 360 mm notched wood blocks or plastic blocks may be used for 150 mm x 200 mm x 1.83 wood posts with 150 mm x 200 mm x 360 mm wood blocks where applicable and when specified.
4. Direction of adjacent traffic indicated by ⟶ .
5. For Transition Railing (Type WB) details for Types 12AA and 12BB Layouts, see Standard Plan A77J4.
6. In-line Terminal System Treatments are used where site conditions will not accommodate a flared end treatment.
7. The type of terminal system to be used will be shown on the Project Plans.
8. Dependent on site conditions (embankment height, side slopes, other fixed objects), it may be advisable to construct additional guard railing (a length equal to multiples of 3.8 m with 1.9 m post spacing) between the transition railing and end treatments.
9. Where placement of dike is required with guard railing installations, see Standard Plan A77C4 for dike positioning details.
10. Type 12AA or Type 12BB Layouts are typically used to the right of traffic departing a structure on two-way conventional highways where the roadbed width across the structure is less than 12 meters. See Railing Case 2 in Diagram No. 1 on Standard Plan A77D1.
11. For additional details of typical connections to bridge rail, see Connection Detail BB on Standard Plans A77J1, Connection Detail CC on Standard Plan A77J2, Connection Detail GG on Standard Plans A77K1 and Connection Detail HH on Standard Plans A77K2.

STATE OF CALIFORNIA
DEPARTMENT OF TRANSPORTATION

METAL BEAM GUARD RAILING TYPICAL LAYOUTS FOR STRUCTURE DEPARTURE

NO SCALE

ALL DIMENSIONS ARE IN MILLIMETERS UNLESS OTHERWISE SHOWN

A77F4

2004 Std PLAN A77F4

04-30-04

Back to Table of Contents

DIST	COUNTY	ROUTE	KILOMETER POST TOTAL PROJECT	SHEET NO.	TOTAL SHEETS

REGISTERED CIVIL ENGINEER

July 1, 2004
PLANS APPROVAL DATE

REGISTERED PROFESSIONAL ENGINEER Ellis K. Hirst No. C17926 Exp. 6-30-05 CIVIL STATE OF CALIFORNIA

The State of California or its officers or agents shall not be responsible for the accuracy or completeness of electronic copies of this plan sheet.

To get to the Caltrans web site, go to: http://www.dot.ca.gov

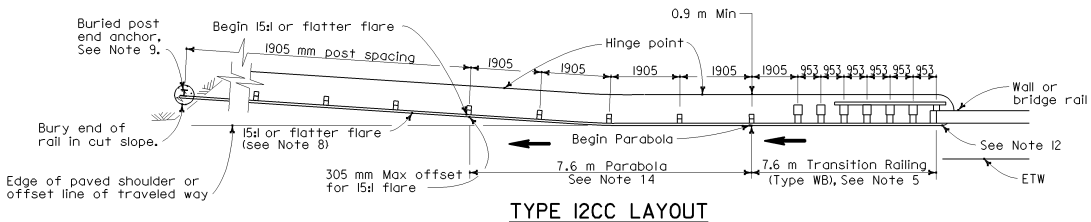

TYPE 12CC LAYOUT

(GUARD RAILING INSTALLATION AT STRUCTURE DEPARTURE WITH A BURIED END ANCHOR TREATMENT AT TRAILING END OF RAILING)
See Notes 10 and 11

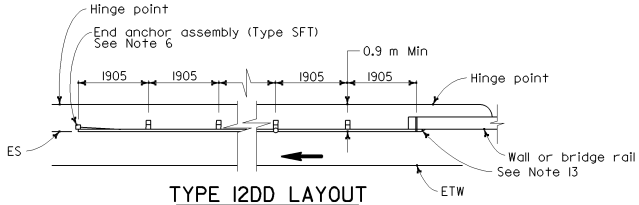

TYPE 12DD LAYOUT

(GUARD RAILING INSTALLATION AT STRUCTURE DEPARTURE WITH END ANCHOR ASSEMBLY AT TRAILING END OF RAILING)
See Notes 7 and 10

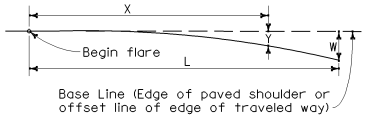

$$Y = \frac{WX^2}{L^2}$$

Y = Offset from base line
W = Maximum offset
X = Distance along base line
L = Length of flare

PARABOLIC FLARE OFFSETS

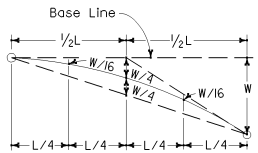

TYPICAL PARABOLIC LAYOUT

NOTES

1. Line post, blocks and hardware to be used are shown on Standard Plans A77A1, A77A2, A77B1, A77C1 and A77C2.
2. Guard rail post spacing to be 1905 mm center to center, except as otherwise noted.
3. Except as noted, line posts are 150 mm x 200 mm x 1.83 m wood with 150 mm x 200 mm x 360 mm wood blocks. MW 150 x 14 steel posts, 1.83 m in length, with 150 mm x 200 mm x 360 mm notched wood blocks or plastic blocks may be used for 150 mm x 200 mm x 1.83 wood posts with 150 mm x 200 mm x 360 mm wood blocks where applicable and when specified.
4. Direction of adjacent traffic indicated by ⟶ .
5. For Transition Railing (Type WB) details for Type 12C Layout, see Standard Plan A77J4.
6. For details of End Anchor Assembly (Type SFT) used with Type 12DD Layout, see Standard Plan A77H1.
7. Type 12DD layout is typically used to the right of traffic departing a structure on two-way conventional highways where the roadbed width across the structure is equal to or greater than 12 meters and guard railing is recommended (embankment height, side slopes, other fixed objects). See Railing Case 3 in Diagram No. 2 on Standard Plan A77D1. Length of railing to be equal to multiples of 3.8 meters. For guard railing connection details to bridge rail, see Standard Plans A77J1 and A77K1. For guard railing connection details to wall, see Standard Plan A77J3.
8. The 15:1 or flatter flare for Type 12CC Layout is based on the edge of the paved shoulder or offset line of edge of the traveled way. The length of guard railing within the 15:1 or flatter flare is based on site conditions and should be a length equal to multiples of 3.8 meters.
9. For details of the buried post end anchor used with Type 12CC Layout, see Standard Plan A77I2.
10. Where placement of dike is required with guard railing installations, see Standard Plan A77C4 for dike positioning details.
11. Type 12CC Layout is typically used to the right of traffic departing a structure on two-way conventional highways where the roadbed width across the structure is less than 12 meters. See Railing Case 2 in Diagram No. 1 on Standard Plan A77D1.
12. For additional details of a typical connection to bridge rail for Layout Type 12CC, see Connection Detail CC on Standard Plan A77J2 and Connection Detail HH on Standard Plan A77K2.
13. For additional details of a typical connection to bridge rail for Layout Type 12DD, see Connection Detail BB on Standard Plan A77J1 and Connection Detail GG on Standard Plan A77K1.
14. For typical flare offsets for 7.6 m length parabola with maximum offset of 305 mm, see Standard Plan A77E1.

STATE OF CALIFORNIA
DEPARTMENT OF TRANSPORTATION

METAL BEAM GUARD RAILING TYPICAL LAYOUTS FOR STRUCTURE DEPARTURE

NO SCALE

ALL DIMENSIONS ARE IN MILLIMETERS UNLESS OTHERWISE SHOWN

A77F5

08-09-04

2004 Std PLAN A77F5

Back to Table of Contents

NOTES

1. Line post, blocks and hardware to be used are shown on Standard Plans A77A1, A77A2, A77B1, A77C1 and A77C2.
2. Guard railing post spacing to be 1905 mm center to center, except as otherwise noted.
3. Except as noted, line posts are 150 mm x 200 mm x 1.83 m wood with 150 mm x 200 mm x 360 mm wood blocks. MW 150 x 14 steel posts, 1.83 m in length, with 150 mm x 200 mm x 360 mm notched wood blocks or plastic blocks may be used for 150 mm x 200 mm x 1.83 m wood posts with 150 mm x 200 mm x 360 mm wood blocks where applicable and when specified.
4. A 1.2 m minimum clearance is required between the face of the railing and the face of a fixed object located directly behind guard railing with post spacing of 1905 mm. Construct guard railing as shown in the detail "Strengthened Railing Sections for Fixed Objects" on this plan, where the clearance between the face of the railing and the face of a fixed object is less than 1.2 m, but not less than 685 mm. Where the clearance is less than 685 mm, a concrete wall or barrier should be constructed to shield the fixed object(s).
5. Direction of adjacent traffic indicated by ➡.
6. For End Anchor Assembly (Type SFT) details, see Standard Plan A77H1.
7. For details of Rail Tensioning Assembly, see Standard Plan A77H2.
8. The type of crash cushion to be used will be shown on the Project Plans.
9. For details of crash cushions, see the A82A Series of Standard Plans.
10. Type 14A layout is typically used on multilane freeways or expressways to shield fixed objects where a median type barrier is not constructed between the separated roadbeds. See Railing Case 4 in Diagram No. 3 on Standard Plan A77D1.
11. For typical flare offsets for 7.6 m length parabola with maximum offset of 305 mm, see Standard Plan A77E1.

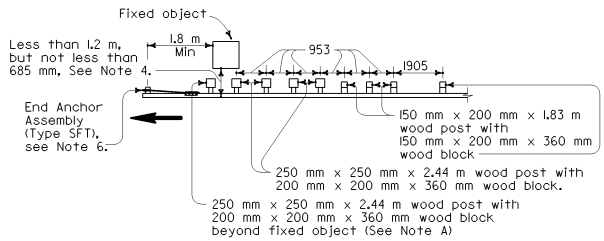

Note A. For a series of fixed objects (bridge columns, overhead sign supports, etc.) additional 250 mm x 250 mm x 2.44 m wood post with 200 mm x 200 mm x 360 mm wood blocks at 953 mm center to center spacing are to be used between fixed objects.

STRENGTHENED RAILING SECTIONS FOR FIXED OBJECT

Use with Type 14A layout where minimum clearance between the face of the guard railing and fixed object(s) is less than 1.2 m, but not less than 685 mm. See Note 4.

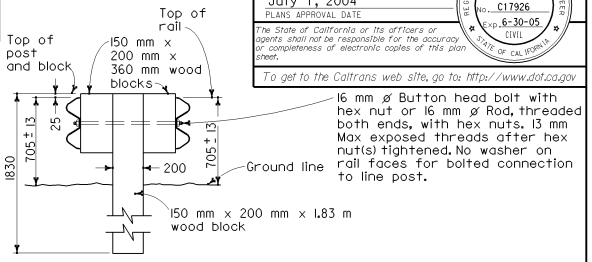

SECTION A-A
TYPICAL DOUBLE METAL BEAM GUARD RAILING

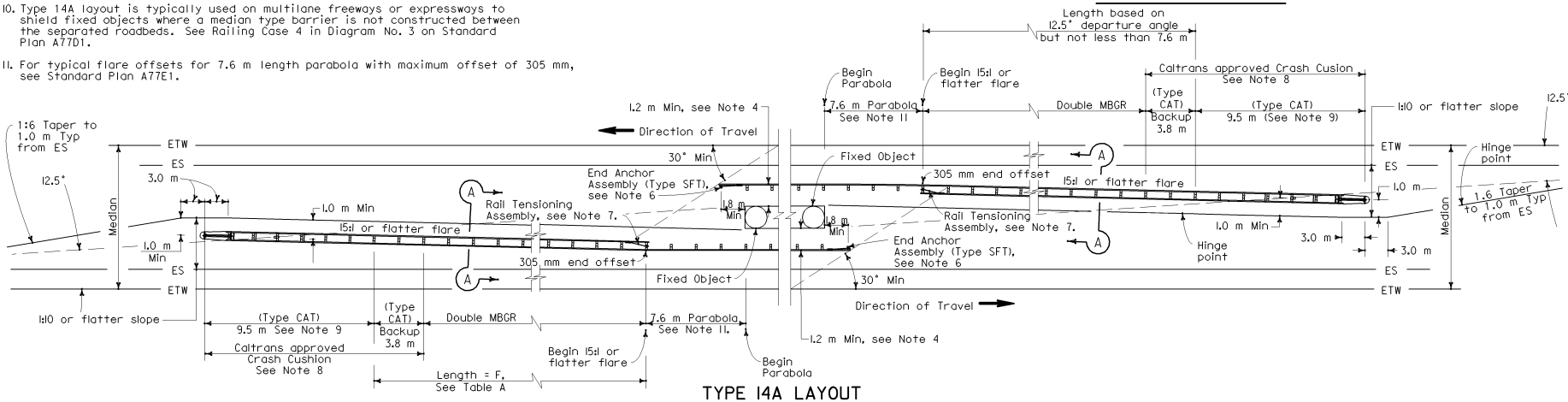

TYPE 14A LAYOUT
See Note 10

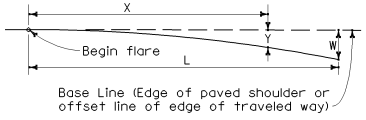

$$Y = \frac{WX^2}{L^2}$$

Y = Offset from base line
W = Maximum offset
X = Distance along base line
L = Length of flare

PARABOLIC FLARE OFFSETS

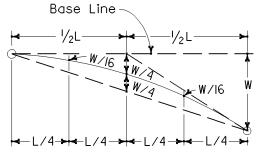

TYPICAL PARABOLIC LAYOUT

STATE OF CALIFORNIA
DEPARTMENT OF TRANSPORTATION

METAL BEAM GUARD RAILING TYPICAL LAYOUTS FOR FIXED OBJECTS BETWEEN SEPARATE ROADBEDS (TWO-WAY TRAFFIC)

NO SCALE

ALL DIMENSIONS ARE IN MILLIMETERS UNLESS OTHERWISE SHOWN

A77G1

Caltrans Metric

DIST	COUNTY	ROUTE	KILOMETER POST TOTAL PROJECT	SHEET NO.	TOTAL SHEETS

REGISTERED CIVIL ENGINEER
July 1, 2004
PLANS APPROVAL DATE
Ellis K. Hirst No. C17926 Exp. 6-30-05 CIVIL
REGISTERED PROFESSIONAL ENGINEER — STATE OF CALIFORNIA

The State of California or its officers or agents shall not be responsible for the accuracy or completeness of electronic copies of this plan sheet.

To get to the Caltrans web site, go to: http://www.dot.ca.gov

2004 Std PLAN A77G1

08-09-04

Back to Table of Contents

NOTES

1. Line post, blocks and hardware to be used are shown on Standard Plans A77A1, A77A2, A77B1, A77C1 and A77C2.
2. Guard railing post spacing to be 1905 mm center to center, except as otherwise noted.
3. Except as noted, line posts are 150 mm x 200 mm x 1.83 m wood with 150 mm x 200 mm x 360 mm wood blocks. MW 150 x 14 steel posts, 1.83 m in length, with 150 mm x 200 mm x 360 m notched wood blocks or plastic blocks may be used for 150 mm x 200 mm x 1.83 m wood posts with 150 mm x 200 mm x 360 mm wood blocks where applicable and when specified.
4. A 1.2 m minimum clearance is required between the face of the railing and the face of a fixed object located directly behind guard railing with post spacing of 1905 mm. Construct guard railing as shown in the detail "Strengthened Railing Sections for Fixed Objects" on this plan, where the clearance between the face of the railing and the face of a fixed object is less than 1.2 m, but not less than 685 mm. Where the clearance is less than 685 mm, a concrete wall or barrier should be constructed to shield the fixed object(s).
5. Direction of adjacent traffic indicated by ⟶ .
6. For End Anchor Assembly (Type SFT) details, see Standard Plan A77H1.
7. For details of crash cushions, see the A82A Series of Standard Plan.
8. Type of crash cushion to be used will be shown on the Project Plans.
9. Type 15A layout is typically used on multilane freeways or expressways to shield fixed objects in the area between separated one-way roadbeds.
10. For typical flare offsets for 7.6 m length parabola with maximum offset of 305 mm, see Standard Plan A77E1.

Caltrans Metric

DIST	COUNTY	ROUTE	KILOMETER POST TOTAL PROJECT	SHEET NO.	TOTAL SHEETS

REGISTERED CIVIL ENGINEER

July 1, 2004
PLANS APPROVAL DATE

REGISTERED PROFESSIONAL ENGINEER Ellis K. Hirst No. C17926 Exp. 6-30-05 CIVIL STATE OF CALIFORNIA

The State of California or its officers or agents shall not be responsible for the accuracy or completeness of electronic copies of this plan sheet.

To get to the Caltrans web site, go to: http://www.dot.ca.gov

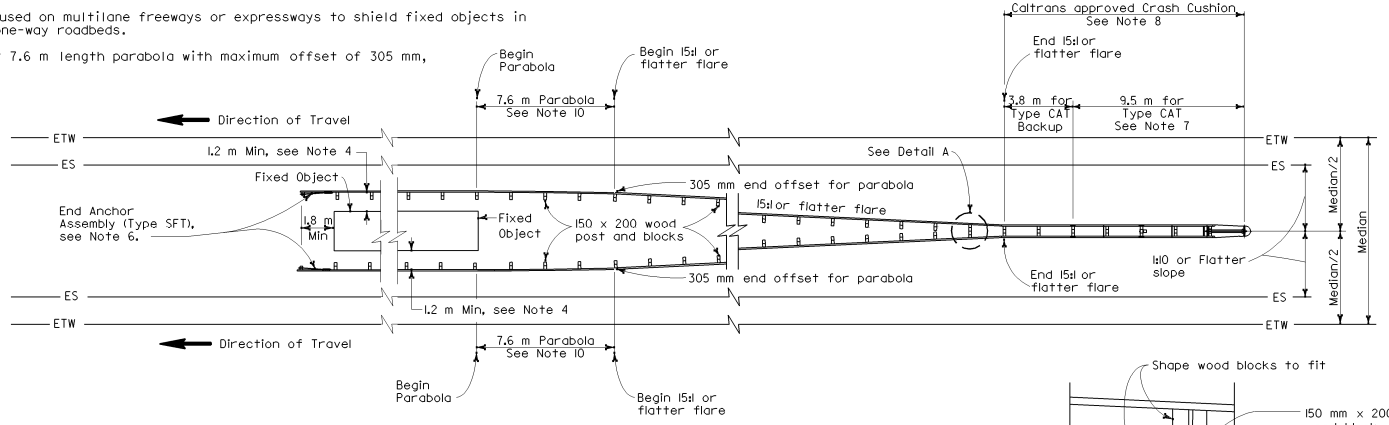

TYPE 15A LAYOUT

See Note 9

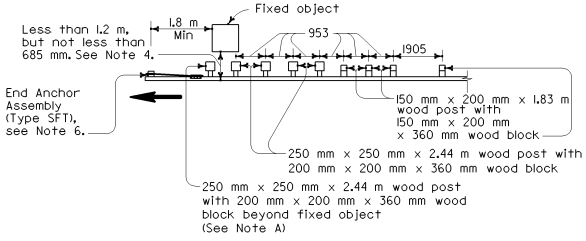

Note A. For a series of fixed objects (bridge columns, overhead sign supports, etc.) additional 250 mm x 250 mm x 2.44 m wood post with 200 mm x 200 mm x 360 mm wood blocks at 953 mm center to center spacing are to be used between fixed objects.

STRENGTHENED RAILING SECTIONS FOR FIXED OBJECT

Use with Type 15A layout where minimum clearance between the face of the guard railing and the fixed object(s) is less than 1.2 m, but not less than 685 mm. See Note 4.

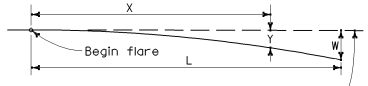

Base Line (Edge of paved shoulder or offset line of edge of traveled way)

$$Y = \frac{WX^2}{L^2}$$

Y = Offset from base line
W = Maximum offset
X = Distance along base line
L = Length of flare

PARABOLIC FLARE OFFSETS

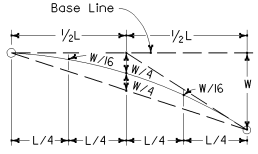

TYPICAL PARABOLIC LAYOUT

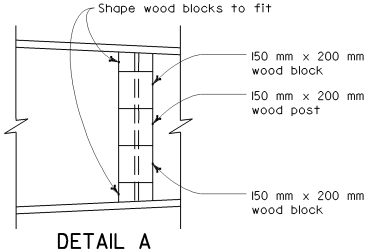

DETAIL A

STATE OF CALIFORNIA
DEPARTMENT OF TRANSPORTATION

METAL BEAM GUARD RAILING TYPICAL LAYOUTS FOR FIXED OBJECTS BETWEEN SEPARATE ROADBEDS (ONE-WAY TRAFFIC)

NO SCALE

ALL DIMENSIONS ARE IN MILLIMETERS UNLESS OTHERWISE SHOWN

A77G2

2004 Std PLAN A77G2

08-09-04

Back to Table of Contents

DIST	COUNTY	ROUTE	KILOMETER POST TOTAL PROJECT	SHEET NO.	TOTAL SHEETS

REGISTERED CIVIL ENGINEER

July 1, 2004
PLANS APPROVAL DATE

REGISTERED PROFESSIONAL ENGINEER Ellis K. Hirst No. C17926 Exp. 6-30-05 CIVIL STATE OF CALIFORNIA

The State of California or its officers or agents shall not be responsible for the accuracy or completeness of electronic copies of this plan sheet.

To get to the Caltrans web site, go to: http://www.dot.ca.gov

Caltrans Metric

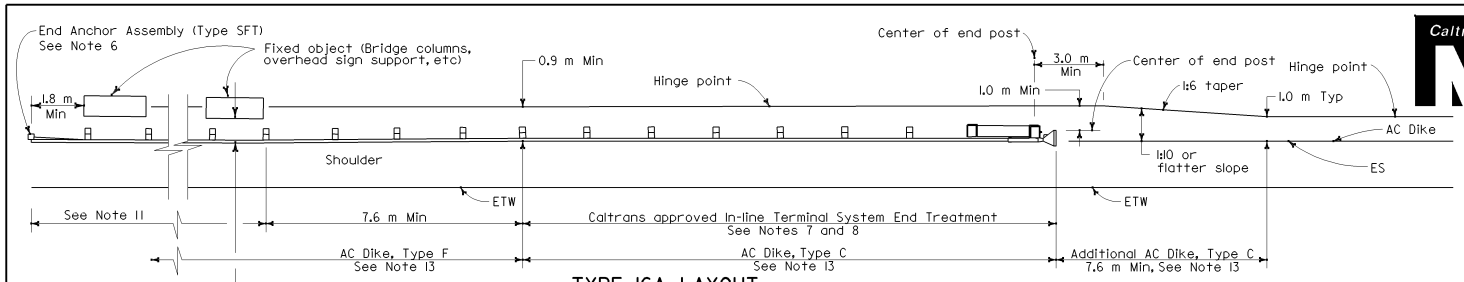

TYPE 16A LAYOUT

(GUARD RAILING INSTALLATION AT ROADSIDE FIXED OBJECT OR OBJECTS WITH AN IN-LINE END TREATMENT AT TRAFFIC APPROACH END OF RAILING)
See Notes 12 and 13

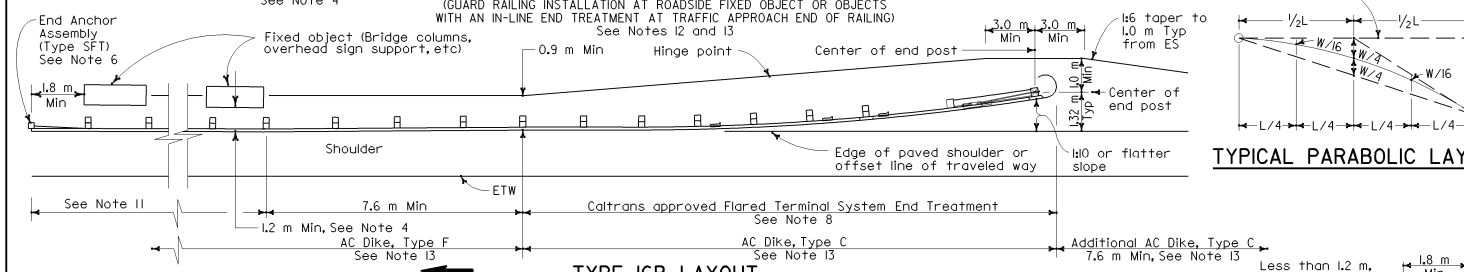

TYPE 16B LAYOUT

(GUARD RAILING INSTALLATION AT ROADSIDE FIXED OBJECT OR OBJECTS WITH A FLARED END TREATMENT AT TRAFFIC APPROACH END OF RAILING)
See Notes 12 and 13

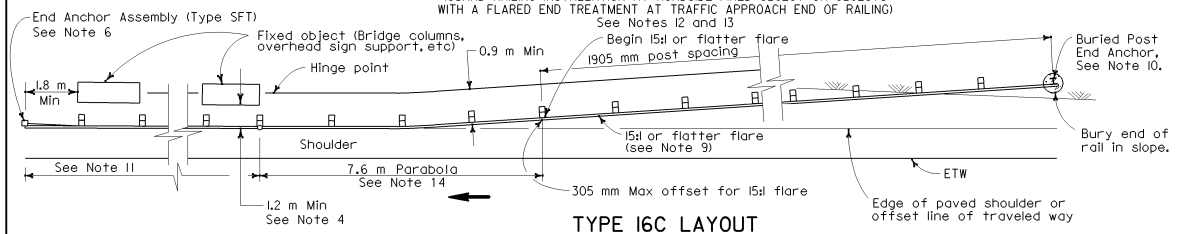

TYPE 16C LAYOUT

(GUARD RAILING INSTALLATION AT ROADSIDE FIXED OBJECT OR OBJECTS WITH A BURIED END ANCHOR TREATMENT AT TRAFFIC APPROACH END OF RAILING)
See Notes 12 and 13

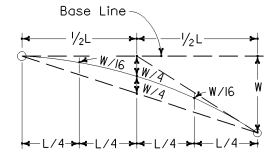

TYPICAL PARABOLIC LAYOUT

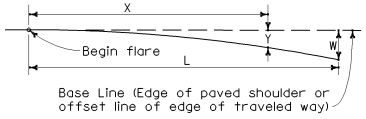

$$Y = \frac{WX^2}{L^2}$$

Y = Offset from base line
W = Maximum offset
X = Distance along base line
L = Length of flare

PARABOLIC FLARE OFFSETS

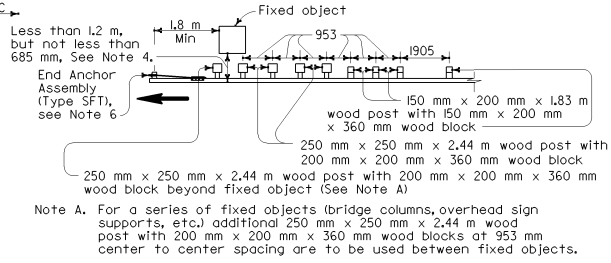

Note A. For a series of fixed objects (bridge columns, overhead sign supports, etc.) additional 250 mm x 250 mm x 2.44 m wood post with 200 mm x 200 mm x 360 mm wood blocks at 953 mm center to center spacing are to be used between fixed objects.

STRENGTHENED RAILING SECTIONS FOR FIXED OBJECT

Use with Types 16A, 16B or 16C Layouts where minimum clearance between the face of the guard railing and fixed object(s) is less than 1.2 m, but not less than 685 mm. See Note 4.

NOTES

1. Line post, blocks and hardware to be used are shown on Revised Standard Plans A77A1, A77A2, A77B1, A77C1 and A77C2.
2. Guard railing post spacing to be 1905 mm center to center, except as otherwise noted.
3. Except as noted, line posts are 150 mm x 200 mm x 1.83 m wood with 150 mm x 200 mm x 360 mm wood blocks. MW 150 x 14 steel posts, 1.83 m in length, with 150 mm x 200 mm x 360 mm notched wood blocks or plastic blocks may be used for 150 mm x 200 mm x 1.83 m wood posts with 150 mm x 200 mm x 360 mm wood blocks where applicable and when specified.
4. A 1.2 m minimum clearance is required between the face of the railing and the face of a fixed object located directly behind guard railing with post spacing of 1905 mm. Construct guard railing as shown in the detail "Strengthened Railing Sections for Fixed Objects" on this plan, where the clearance between the face of the railing and the face of a fixed object is less than 1.2 m, but not less than 685 mm. Where the clearance is less than 685 mm, a concrete wall or barrier should be constructed to shield the fixed object(s).
5. Direction of adjacent traffic indicated by ⟶ .
6. For End Anchor Assembly (Type SFT) details, see Revised Standard Plan RSP A77H1.
7. In-line Terminal System End Treatments are used where site conditions will not accommodate a flared end treatment.
8. The type of terminal system to be used will be shown on the Project Plans.
9. The 15:1 or flatter flare used with Type 16C Layout is based on the edge of the paved shoulder or offset line of edge of the traveled way. The length of guard railing within the 15:1 or flatter flare is based on site conditions and should be a length equal to multiples of 3.8 meters.
10. For details of the Buried Post End Anchor used with Type 16C Layout, see Standard Plan A77I2.
11. As site conditions dictate, construct additional guard railing to shield fixed object(s). Additional guard railing length equal to multiples of 3.8 m. Post spacing at 1905 mm except as specified in Note 4.
12. Layout Types 16A, 16B or 16C are typically used where guard railing is recommended to shield roadside fixed object(s) and a crashworthy end treatment is required for only one direction of traffic. See, Railing Case 7 in Diagram Nos. 5, 6, 7 and 8 on Standard Plan A77D1.
13. Where placement of dike is required with guard railing, see Standard Plan A77C4 for dike positioning details.
14. For typical flare offsets for 7.6 m length parabola with maximum offset of 305 mm, see Standard Plan A77E1.

STATE OF CALIFORNIA
DEPARTMENT OF TRANSPORTATION

METAL BEAM GUARD RAILING TYPICAL LAYOUTS FOR ROADSIDE FIXED OBJECTS

NO SCALE

ALL DIMENSIONS ARE IN MILLIMETERS UNLESS OTHERWISE SHOWN

A77G3

08-09-04

Back to Table of Contents

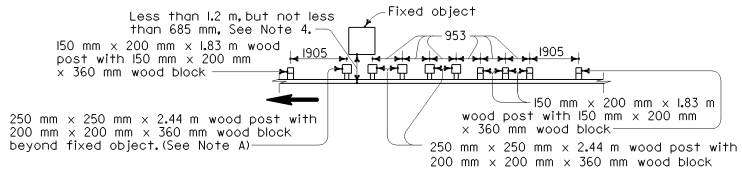

Note A. For a series of fixed objects (bridge columns, overhead sign supports, etc.) additional 250 mm x 250 mm x 2.44 m wood post with 200 mm x 200 mm x 360 mm wood blocks at 953 mm center to center spacing are to be used between fixed object(s).

STRENGTHENED RAILING SECTIONS FOR FIXED OBJECT

Use with Layout Types 16D or 16E where minimum clearance between the face of the guard railing and fixed object(s) is less than 1.2 m, but not less than 685 mm. See Note 4.

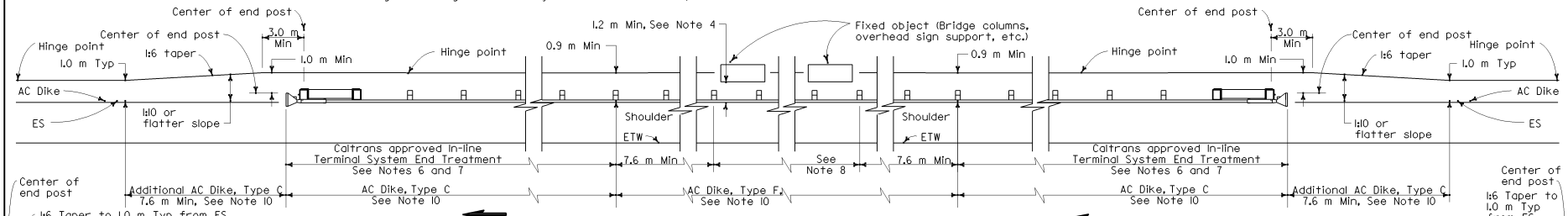

TYPE 16D LAYOUT

(GUARD RAILING INSTALLATION AT ROADSIDE FIXED OBJECT OR OBJECTS WITH AN IN-LINE END TREATMENT AT EACH END OF RAILING) See Note 9

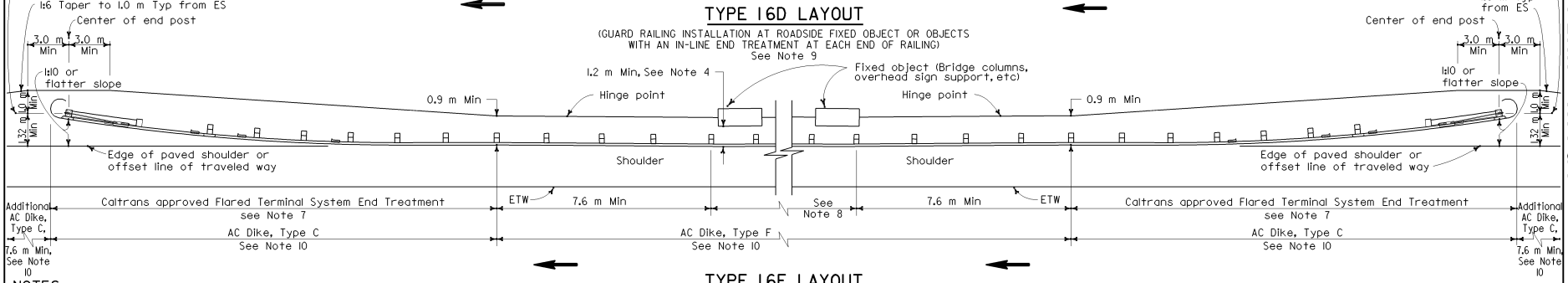

TYPE 16E LAYOUT

(GUARD RAILING INSTALLATION AT ROADSIDE FIXED OBJECT OR OBJECTS WITH A FLARED END TREATMENT AT EACH END OF RAILING) See Note 9

NOTES

1. Line post, blocks and hardware to be used are shown on Standard Plans A77A1, A77A2, A77B1, A77C1 and A77C2.
2. Guard railing post spacing to be 1905 mm center to center, except as otherwise noted.
3. Except as noted, line posts are 150 mm x 200 mm x 1.83 m wood with 150 mm x 200 mm x 360 mm wood blocks. MW 150 x 14 steel posts, 1.83 m in length, with 150 mm x 200 mm x 360 m notched wood blocks or plastic blocks may be used for 150 mm x 200 mm x 1.83 wood posts with 150 mm x 200 mm x 360 mm wood blocks where applicable and when specified.
4. A 1.2 m minimum clearance is required between the face of the railing and the face of a fixed object located directly behind guard railing with post spacing at 1905 mm. Construct guard railing as shown in the detail "Strengthened Railing Sections for Fixed Objects" on this plan, where the clearance between the face of the railing and the face of a fixed object is less than 1.2 m, but not less than 685 mm. Where the clearance is less than 685 mm, a concrete wall or barrier should be constructed to shield the fixed object(s).
5. Direction of adjacent traffic indicated by ⟶ .
6. In-line Terminal System End Treatments are used where site conditions will not accommodate a flared end treatment.
7. The type of terminal system to be used will be shown on the Project Plans.
8. As site conditions dictate, construct additional guard railing to shield fixed object(s). Additional guard railing length equal to multiples of 3.8 m. Post spacing at 1905 mm, except as specified in Note 4.
9. Layout Types 16D through 16L, shown on the A77G Series of Standard Plans, are typically used where guard railing is recommended to shield roadside fixed object(s) and a crashworthy end treatment is required for both directions of traffic. See Railing Case 8 in Diagram No. 5 on Standard Plan A77D1.
10. Where placement of dike is required with guard railing, see Standard Plan A77C4 for dike positioning details.

Caltrans Metric

DIST	COUNTY	ROUTE	KILOMETER POST TOTAL PROJECT	SHEET NO.	TOTAL SHEETS

REGISTERED CIVIL ENGINEER

July 1, 2004
PLANS APPROVAL DATE

REGISTERED PROFESSIONAL ENGINEER Ellis K. Hirst No. C17926 Exp. 6-30-05 CIVIL STATE OF CALIFORNIA

The State of California or its officers or agents shall not be responsible for the accuracy or completeness of electronic copies of this plan sheet.

To get to the Caltrans web site, go to: http://www.dot.ca.gov

STATE OF CALIFORNIA
DEPARTMENT OF TRANSPORTATION

METAL BEAM GUARD RAILING TYPICAL LAYOUTS FOR ROADSIDE FIXED OBJECTS

NO SCALE

ALL DIMENSIONS ARE IN MILLIMETERS UNLESS OTHERWISE SHOWN

A77G4

05-24-04

Back to Table of Contents

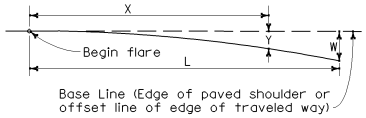

$$Y = \frac{WX^2}{L^2}$$

Y = Offset from base line
W = Maximum offset
X = Distance along base line
L = Length of flare

PARABOLIC FLARE OFFSETS

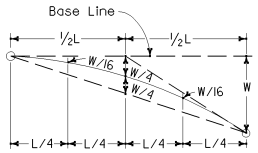

TYPICAL PARABOLIC LAYOUT

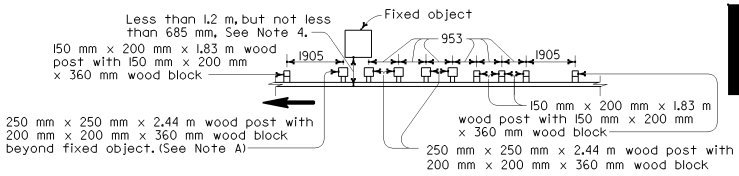

Note A. For a series of fixed objects (bridge columns, overhead sign supports, etc.) additional 250 mm x 250 mm x 2.44 m wood post with 200 mm x 200 mm x 360 mm wood blocks at 953 mm center to center spacing are to be used between fixed object(s).

Caltrans Metric

DIST	COUNTY	ROUTE	KILOMETER POST TOTAL PROJECT	SHEET NO.	TOTAL SHEETS

REGISTERED CIVIL ENGINEER

July 1, 2004
PLANS APPROVAL DATE

REGISTERED PROFESSIONAL ENGINEER Ellis K. Hirst No. C17926 Exp. 6-30-05 CIVIL STATE OF CALIFORNIA

The State of California or its officers or agents shall not be responsible for the accuracy or completeness of electronic copies of this plan sheet.

To get to the Caltrans web site, go to: http://www.dot.ca.gov

STRENGTHENED RAILING SECTIONS FOR FIXED OBJECT

Use with Layout Types 16F or 16G where minimum clearance between the face of the guard railing and fixed object(s) is less than 1.2 m, but not less than 685 mm. See Note 4.

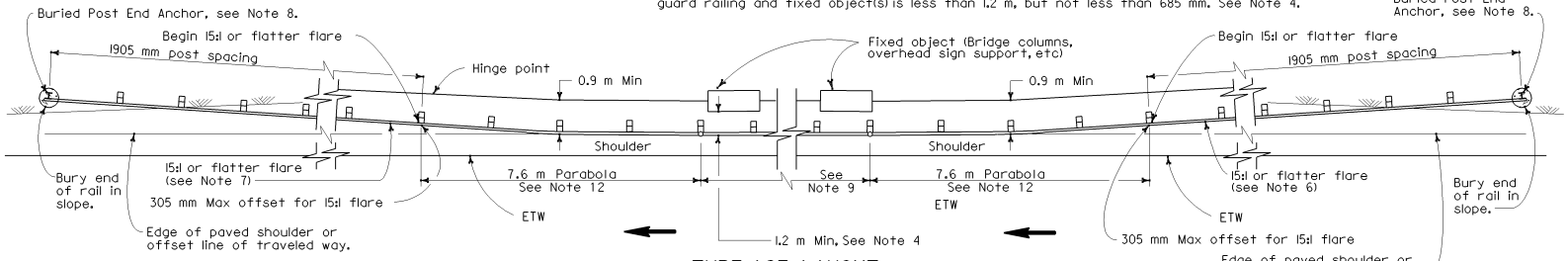

TYPE 16F LAYOUT

(GUARD RAILING INSTALLATION AT ROADSIDE FIXED OBJECT OR OBJECTS WITH A BURIED END ANCHOR TREATMENT AT EACH END OF RAILING)
See Notes 10 and 11

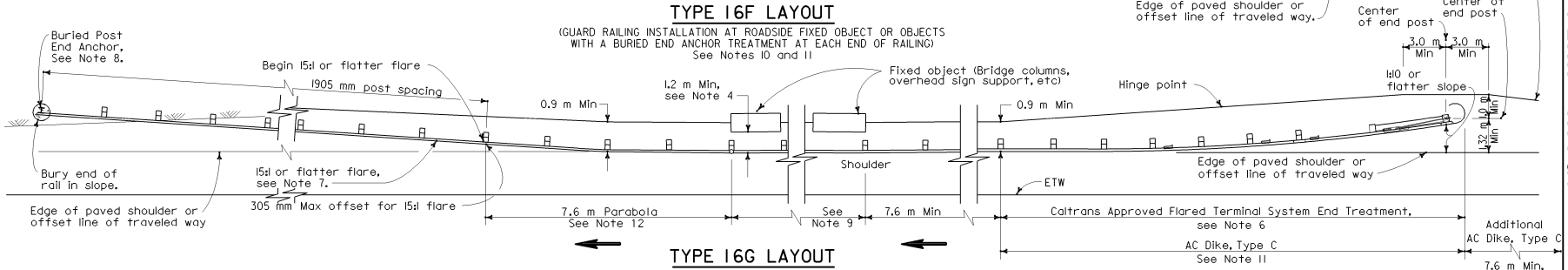

TYPE 16G LAYOUT

(GUARD RAILING INSTALLATION AT ROADSIDE FIXED OBJECT OR OBJECTS WITH A FLARED END TREATMENT AND A BURIED END ANCHOR TREATMENT AT THE ENDS OF RAILING)
See Notes 10 and 11

NOTES

1. Line post, blocks and hardware to be used are shown on Standard Plans A77A1, A77A2, A77B1, A77C1 and A77C2.
2. Guard railing post spacing to be 1905 mm center to center, except as otherwise noted.
3. Except as noted, line posts are 150 mm x 200 mm x 1.83 m wood with 150 mm x 200 mm x 360 mm wood blocks. MW 150 x 14 steel posts, 1.83 m in length, with 200 mm x 200 mm x 360 mm notched wood blocks or plastic blocks may be used for 150 mm x 200 mm x 1.83 m wood posts with 150 mm x 200 mm x 360 mm wood blocks where applicable and when specified.
4. A 1.2 m minimum clearance is required between the face of the railing and the face of a fixed object located directly behind guard railing with post spacing at 1905 mm. Construct guard railing as shown in the detail "Strengthened Railing Sections for Fixed Objects" on this plan, where the clearance between the face of the railing and the face of a fixed object is less than 1.2 m, but not less than 685 mm. Where the clearance is less than 685 mm, a concrete wall or barrier should be constructed to shield the fixed object(s).
5. Direction of adjacent traffic indicated by ➡ .
6. The type of terminal system to be used will be shown on the Project Plans.
7. The 15:1 or flatter flare for the buried post anchor is based on the edge of the paved shoulder or offset line of edge of the traveled way. The length of guard railing within the 15:1 or flatter flare is based on site conditions and should be a length equal to multiples of 3.8 meters.
8. For details of the Buried Post End Anchor details, see Standard Plan A77I2.
9. As site conditions dictate, construct additional guard railing to shield fixed object(s). Additional guard railing length equal to multiples of 3.8 m. Post spacing at 1905 mm, except as specified in Note 4.
10. Layout Types 16D through 16L, shown on the A77G Series of Standard Plans, are typically used on highways where guard railing is recommended to shield roadside fixed object(s) and a crashworthy end treatment is required for both directions of traffic. See Railing Case 8 in Diagram No. 5 on Standard Plan A77D1.
11. Where placement of dike is required with guard railing, see Standard Plan A77C4 for dike positioning details.
12. For typical flare offsets for 7.6 m length parabola with maximum offset of 305 mm, see Standard Plan A77E1.

STATE OF CALIFORNIA
DEPARTMENT OF TRANSPORTATION

METAL BEAM GUARD RAILING TYPICAL LAYOUTS FOR ROADSIDE FIXED OBJECTS

NO SCALE

ALL DIMENSIONS ARE IN MILLIMETERS UNLESS OTHERWISE SHOWN

A77G5

08-09-04

Back to Table of Contents

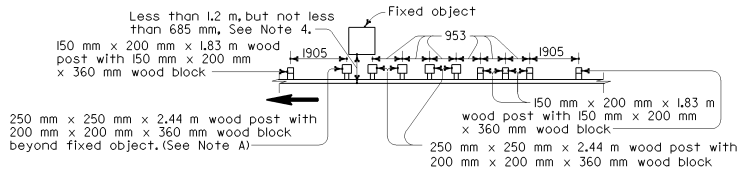

Note A. For a series of fixed objects (bridge columns, overhead sign supports, etc.) additional 250 mm x 250 mm x 2.44 m wood post with 200 mm x 200 mm x 360 mm wood blocks at 953 mm center to center spacing are to be used between fixed object(s).

STRENGTHENED RAILING SECTIONS FOR FIXED OBJECT

Use with Layout Type 16H where minimum clearance between the face of the guard railing and fixed object(s) is less than 1.2 m, but not less than 685 mm. See Note 4.

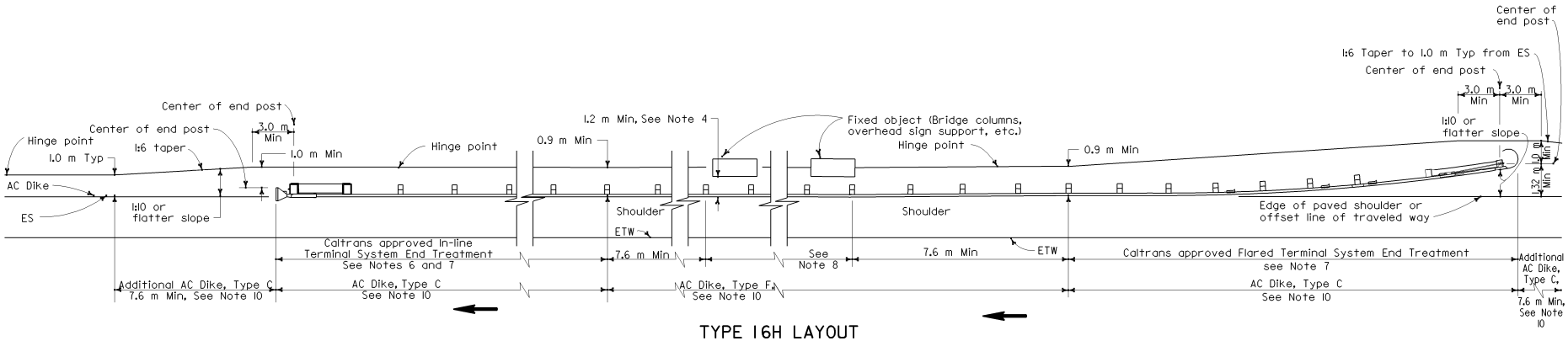

TYPE 16H LAYOUT

(GUARD RAILING INSTALLATION AT ROADSIDE FIXED OBJECT OR OBJECTS WITH A FLARED END TREATMENT AND AN IN-LINE TREATMENT AT THE ENDS OF RAILING) See Note 9

NOTES

1. Line post, blocks and hardware to be used are shown on Standard Plans A77A1, A77A2, A77B1, A77C1 and A77C2.
2. Guard railing post spacing to be 1905 mm center to center, except as otherwise noted.
3. Except as noted, line posts are 150 mm x 200 mm x 1.83 m wood with 150 mm x 200 mm x 360 mm wood blocks. MW 150 x 14 steel posts, 1.83 m in length, with 150 mm x 200 mm x 360 mm notched wood blocks or plastic blocks may be used for 150 mm x 200 mm x 1.83 m wood posts with 150 mm x 200 mm x 360 mm wood blocks where applicable and when specified.
4. A 1.2 m minimum clearance is required between the face of the railing and the face of a fixed object located directly behind guard railing with post spacing at 1905 mm. Construct guard railing as shown in the detail "Strengthened Railing Sections for Fixed Objects" on this plan, where the clearance between the face of the railing and the face of a fixed object is less than 1.2 m, but not less than 685 mm. Where the clearance is less than 685 mm, a concrete wall or barrier should be constructed to shield the fixed object(s).
5. Direction of adjacent traffic indicated by ⟶ .
6. In-line Terminal System End Treatments are used where site conditions will not accommodate a flared end treatment.
7. The type of terminal system to be used will be shown on the Project Plans.
8. As site conditions dictate, construct additional guard railing to shield fixed object(s). Additional guard railing length equal to multiples of 3.8 m. Post spacing at 1905 mm, except as specified in Note 4.
9. Layout Types 16D through 16L, shown on the A77G Series of Standard PLans, typically used where guard railing is recommended to shield roadside fixed object(s) and a crashworthy end treatment is required for both directions of traffic. See Railing Case 8 in Diagram No. 5 on Standard Plan A77D1.
10. Where placement of dike is required with guard railing, see Standard Plan A77C4 for dike positioning details.

Caltrans Metric

DIST	COUNTY	ROUTE	KILOMETER POST TOTAL PROJECT	SHEET NO.	TOTAL SHEETS

REGISTERED CIVIL ENGINEER

July 1, 2004
PLANS APPROVAL DATE

REGISTERED PROFESSIONAL ENGINEER Ellis K. Hirst No. C17926 Exp. 6-30-05 CIVIL STATE OF CALIFORNIA

The State of California or its officers or agents shall not be responsible for the accuracy or completeness of electronic copies of this plan sheet.

To get to the Caltrans web site, go to: http://www.dot.ca.gov

STATE OF CALIFORNIA
DEPARTMENT OF TRANSPORTATION

METAL BEAM GUARD RAILING TYPICAL LAYOUTS FOR ROADSIDE FIXED OBJECTS

NO SCALE

ALL DIMENSIONS ARE IN MILLIMETERS UNLESS OTHERWISE SHOWN

A77G6

2004 Std PLAN A77G6

05-24-04

Back to Table of Contents

DIST	COUNTY	ROUTE	KILOMETER POST TOTAL PROJECT	SHEET NO.	TOTAL SHEETS

REGISTERED CIVIL ENGINEER

July 1, 2004
PLANS APPROVAL DATE

Ellis K. Hirst No. C17926 Exp. 6-30-05 CIVIL — REGISTERED PROFESSIONAL ENGINEER — STATE OF CALIFORNIA

The State of California or its officers or agents shall not be responsible for the accuracy or completeness of electronic copies of this plan sheet.

To get to the Caltrans web site, go to: http://www.dot.ca.gov

Caltrans Metric

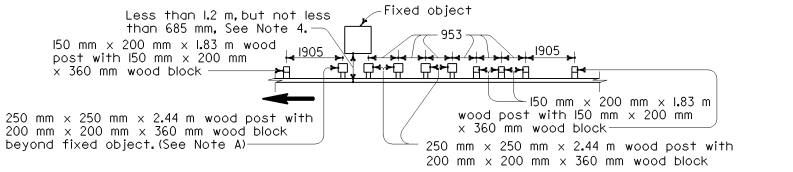

Note A. For a series of fixed objects (bridge columns, overhead sign supports, etc.) additional 250 mm x 250 mm x 2.44 m wood post with 200 mm x 200 mm x 360 mm wood blocks at 953 mm center to center spacing are to be used between fixed object(s).

STRENGTHENED RAILING SECTIONS FOR FIXED OBJECT

Use with Layout Types 16I or 16J Layouts where minimum clearance between the face of the guard railing and fixed object(s) is less than 1.2 m, but not less than 685 mm. See Note 4.

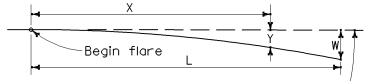

Base Line (Edge of paved shoulder or offset line of edge of traveled way)

$$Y = \frac{WX^2}{L^2}$$

Y = Offset from base line
W = Maximum offset
X = Distance along base line
L = Length of flare

PARABOLIC FLARE OFFSETS

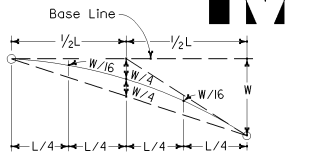

TYPICAL PARABOLIC LAYOUT

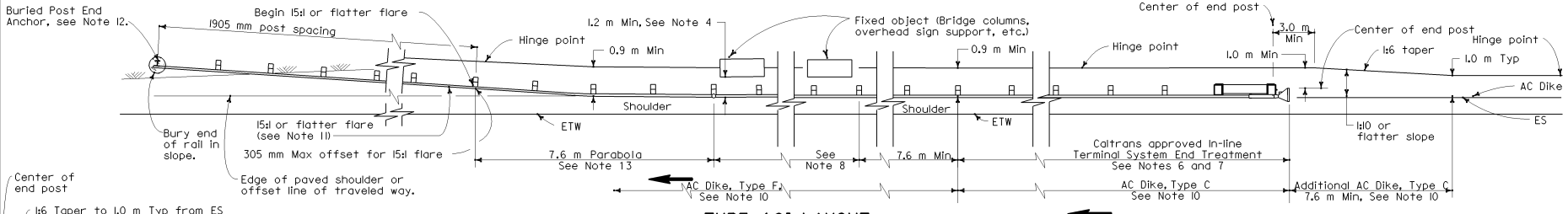

TYPE 16I LAYOUT

(GUARD RAILING INSTALLATION AT ROADSIDE FIXED OBJECT OR OBJECTS WITH AN IN-LINE END TREATMENT AND A BURIED END ANCHOR TREATMENT AT THE ENDS OF RAILING)
See Note 9

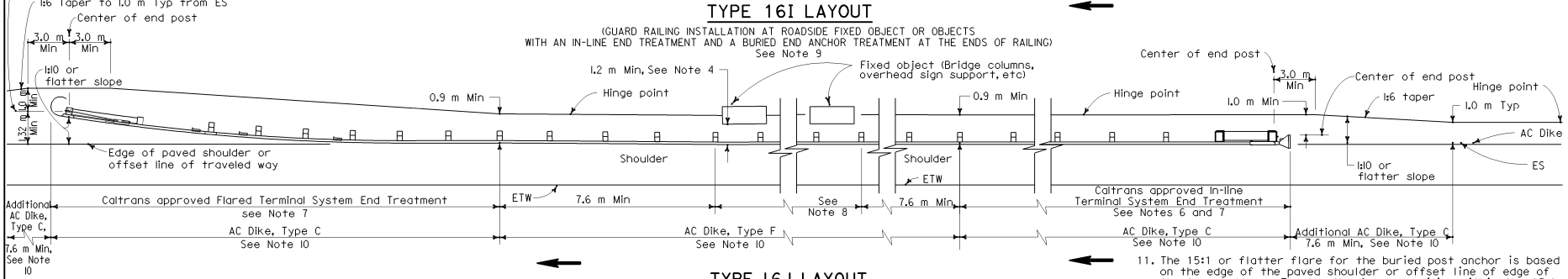

TYPE 16J LAYOUT

(GUARD RAILING INSTALLATION AT ROADSIDE FIXED OBJECT OR OBJECTS WITH AN IN-LINE END TREATMENT AND A FLARED END TREATMENT AT THE ENDS OF RAILING)
See Note 9

NOTES

1. Line post, blocks and hardware to be used are shown on Standard Plans A77A1, A77A2, A77B1, A77C1 and A77C2.
2. Guard railing post spacing to be 1905 mm center to center, except as otherwise noted.
3. Except as noted, line posts are 150 mm x 200 mm x 1.83 m wood with 150 mm x 200 mm x 360 mm wood blocks. MW 150 x 14 steel posts, 1.83 m in length, with 150 mm x 200 mm x 360 mm notched wood blocks or plastic blocks may be used for 150 mm x 200 mm x 1.83 m wood posts with 150 mm x 200 mm x 360 mm wood blocks where applicable and when specified.
4. A 1.2 m minimum clearance is required between the face of the railing and the face of a fixed object located directly behind guard railing with post spacing at 1905 mm. Construct guard railing as shown in the detail "Strengthened Railing Sections for Fixed Objects" on this plan, where the clearance between the face of the railing and the face of a fixed object is less than 1.2 m, but not less than 685 mm. Where the clearance is less than 685 mm, a concrete wall or barrier should be constructed to shield the fixed object(s).
5. Direction of adjacent traffic indicated by ⟶ .
6. In-line Terminal System End Treatments are used where site conditions will not accommodate a flared end treatment.
7. The type of terminal system to be used will be shown on the Project Plans.
8. As site conditions dictate, construct additional guard railing to shield fixed object(s). Additional guard railing length equal to multiples of 3.8 m. Post spacing at 1905 mm, except as specified in Note 4.
9. Layout Types 16D through 16L, shown on the A77G Series of Standard Plans, are typically used where guard railing is recommended to shield roadside fixed object(s) and a crashworthy end treatment is required for both directions of traffic. See Railing Case 8 in Diagram No. 5 on Standard Plan A77D1.
10. Where placement of dike is required with guard railing, see Standard Plan A77C4 for dike positioning details.
11. The 15:1 or flatter flare for the buried post anchor is based on the edge of the paved shoulder or offset line of edge of the traveled way. The length of guard railing within the 15:1 or flatter flare is based on site conditions and should be a length equal to multiples of 3.8 meters.
12. For details of Buried Post End Anchor details, see Standard Plan A77I2.
13. For typical flare offsets for 7.6 m length parabola with maximum offset of 305 mm, see Standard Plan A77E1.

STATE OF CALIFORNIA
DEPARTMENT OF TRANSPORTATION

METAL BEAM GUARD RAILING TYPICAL LAYOUTS FOR ROADSIDE FIXED OBJECTS

NO SCALE

ALL DIMENSIONS ARE IN MILLIMETERS UNLESS OTHERWISE SHOWN

A77G7

2004 Std PLAN A77G7

08-09-04

Back to Table of Contents

DIST	COUNTY	ROUTE	KILOMETER POST TOTAL PROJECT	SHEET NO.	TOTAL SHEETS

REGISTERED CIVIL ENGINEER

July 1, 2004
PLANS APPROVAL DATE

REGISTERED PROFESSIONAL ENGINEER Ellis K. Hirst No. C17926 Exp. 6-30-05 CIVIL STATE OF CALIFORNIA

The State of California or its officers or agents shall not be responsible for the accuracy or completeness of electronic copies of this plan sheet.

To get to the Caltrans web site, go to: http://www.dot.ca.gov

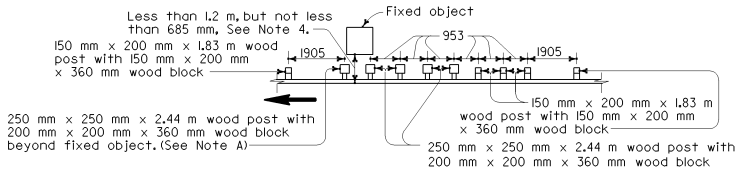

Note A. For a series of fixed objects (bridge columns, overhead sign supports, etc.) additional 250 mm x 250 mm x 2.44 m wood post with 200 mm x 200 mm x 360 mm wood blocks at 953 mm center to center spacing are to be used between fixed object(s).

STRENGTHENED RAILING SECTIONS FOR FIXED OBJECT

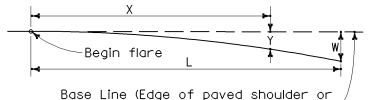

$$Y = \frac{WX^2}{L^2}$$

Y = Offset from base line
W = Maximum offset
X = Distance along base line
L = Length of flare

PARABOLIC FLARE OFFSETS

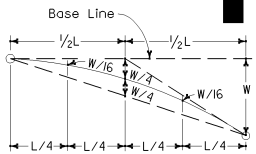

TYPICAL PARABOLIC LAYOUT

Use with Layout Types 16K or 16L Layouts where minimum clearance between the face of the guard railing and fixed object(s) is less than 1.2 m, but not less than 685 mm. See Note 4.

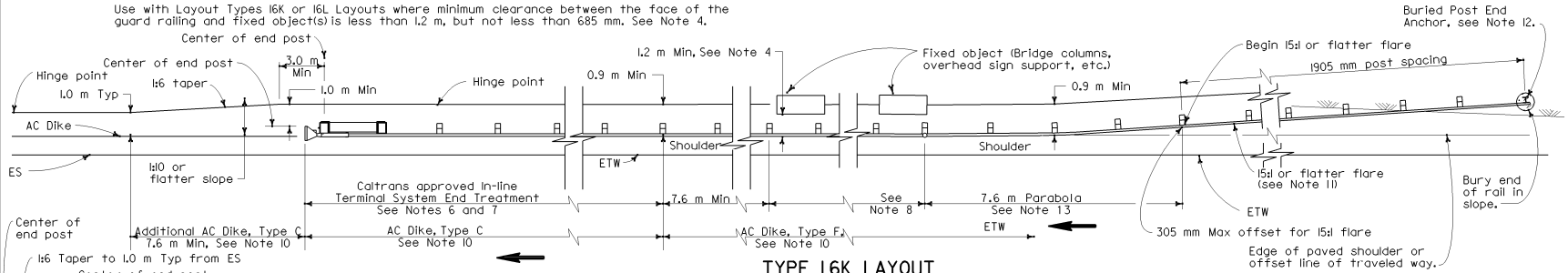

TYPE 16K LAYOUT

(GUARD RAILING INSTALLATION AT ROADSIDE FIXED OBJECT OR OBJECTS WITH A BURIED END ANCHOR TREATMENT AND AN IN-LINE END TREATMENT AT THE ENDS OF RAILING) See Note 9

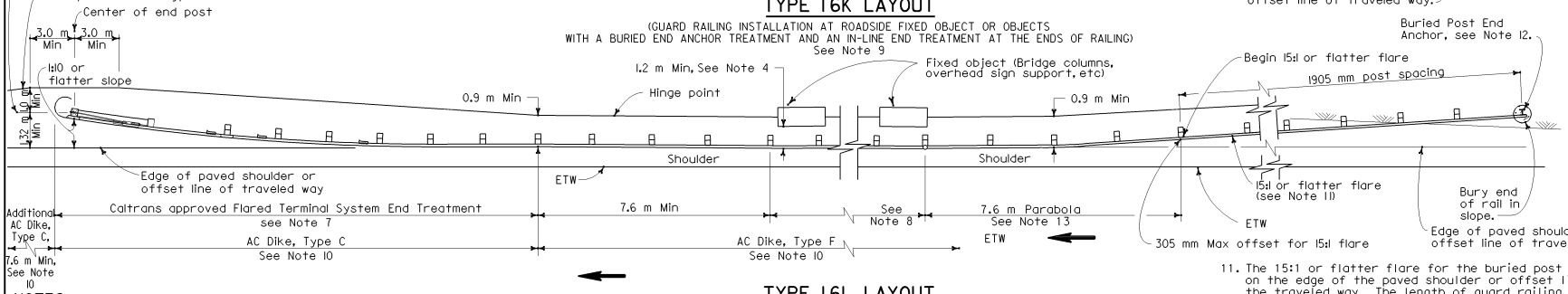

TYPE 16L LAYOUT

(GUARD RAILING INSTALLATION AT ROADSIDE FIXED OBJECT OR OBJECTS WITH A BURIED END ANCHOR TREATMENT AND A FLARED END TREATMENT AT THE ENDS OF RAILING) See Note 9

NOTES

1. Line post, blocks and hardware to be used are shown on Standard Plans A77A1, A77A2, A77B1, A77C1 and A77C2.
2. Guard railing post spacing to be 1905 mm center to center, except as otherwise noted.
3. Except as noted, line posts are 150 mm x 200 mm x 1.83 m wood with 150 mm x 200 mm x 360 mm wood blocks. MW 150 x 14 steel posts, 1.83 m in length, with 150 mm x 200 mm x 360 m notched wood blocks or plastic blocks may be used for 150 mm x 200 mm x 1.83 wood posts with 150 mm x 200 mm x 360 mm wood blocks where applicable and when specified.
4. A 1.2 m minimum clearance is required between the face of the railing and the face of a fixed object located directly behind guard railing with post spacing at 1905 mm. Construct guard railing as shown in the detail "Strengthened Railing Sections for Fixed Objects" on this plan, where the clearance between the face of the railing and the face of a fixed object is less than 1.2 m, but not less than 685 mm. Where the clearance is less than 685 mm, a concrete wall or barrier should be constructed to shield the fixed object(s).
5. Direction of adjacent traffic indicated by ➡ .
6. In-line Terminal System End Treatments are used where site conditions will not accommodate a flared end treatment.
7. The type of terminal system to be used will be shown on the Project Plans.
8. As site conditions dictate, construct additional guard railing to shield fixed object(s). Additional guard railing length equal to multiples of 3.8 m. Post spacing at 1905 mm, except as specified in Note 4.
9. Layout Types 16D through 16L, shown on the A77G Series of Standard Plans, are typically used where guard railing is recommended to shield roadside fixed object(s) and a crashworthy end treatment is required for both directions of traffic. See Railing Case 8 in Diagram No. 5 on Standard Plan A77D1.
10. Where placement of dike is required with guard railing, see Standard Plan A77C4 for dike positioning details.
11. The 15:1 or flatter flare for the buried post anchor is based on the edge of the paved shoulder or offset line of edge of the traveled way. The length of guard railing within the 15:1 or flatter flare is based on site conditions and should be a length equal to multiples of 3.8 meters.
12. For details of Buried Post End Anchor details, see Standard Plan A77I2.
13. For typical flare offsets for 7.6 m length parabola with maximum offset of 305 mm, see Standard Plan A77E1.

STATE OF CALIFORNIA
DEPARTMENT OF TRANSPORTATION

METAL BEAM GUARD RAILING TYPICAL LAYOUTS FOR ROADSIDE FIXED OBJECTS

NO SCALE

ALL DIMENSIONS ARE IN MILLIMETERS UNLESS OTHERWISE SHOWN

A77G8

08-09-04

Back to Table of Contents

DIST	COUNTY	ROUTE	KILOMETER POST TOTAL PROJECT	SHEET NO.	TOTAL SHEETS

Caltrans Metric

REGISTERED CIVIL ENGINEER

July 1, 2004
PLANS APPROVAL DATE

REGISTERED PROFESSIONAL ENGINEER Ellis K. Hirst No. C17926 Exp. 6-30-05 CIVIL STATE OF CALIFORNIA

The State of California or its officers or agents shall not be responsible for the accuracy or completeness of electronic copies of this plan sheet.

To get to the Caltrans web site, go to: http://www.dot.ca.gov

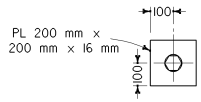

DETAIL A
CABLE CONNECTION
END PLATE

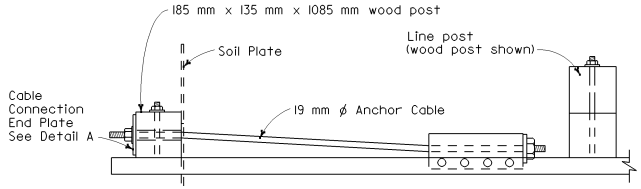

PLAN

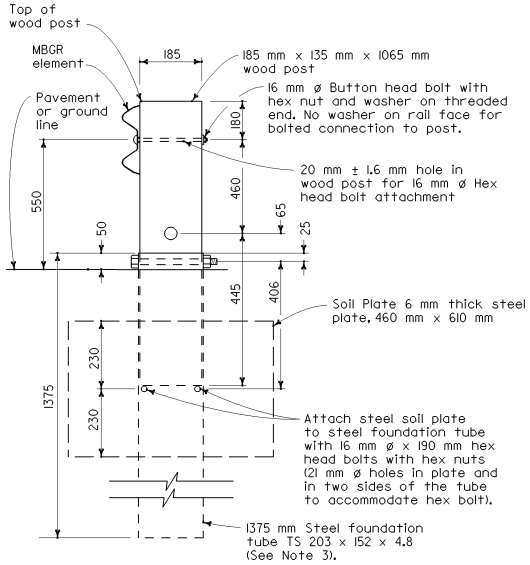

SECTION A-A

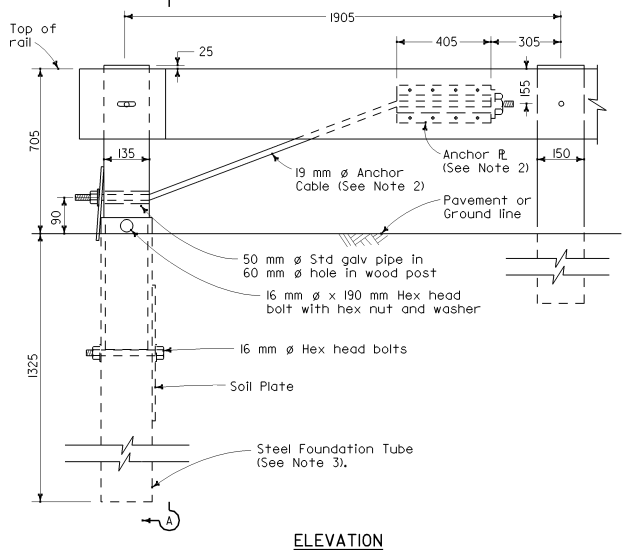

ELEVATION
END ANCHOR
ASSEMBLY (TYPE SFT)
See Note 1

NOTES

1. See the A77E, A77F and A77G series of Standard Plans for typical use of End Anchor Assembly (Type SFT).
2. For details of the anchor plate and 19 mm cable, see Standard Plan A77H3.
3. A 1830 mm length steel foundation tube, TS 203 x 152 x 4.8, without a soil plate, may be furnished and installed in place of the 1375 mm length steel foundation tube and soil plate shown. Minimum embedment of the 1830 mm length tube shall be 1760 mm. A 16 mm ø hex head bolt and nut shall be installed in the hole in the 1830 mm length tube to keep the wood post from dropping into the tube.
4. Direction of traffic indicated by ⟶ .

STATE OF CALIFORNIA
DEPARTMENT OF TRANSPORTATION

METAL RAILING END ANCHOR ASSEMBLY (TYPE SFT)

NO SCALE

ALL DIMENSIONS ARE IN
MILLIMETERS UNLESS OTHERWISE SHOWN

A77H1

2004 Std PLAN A77H1

04-30-04

Back to Table of Contents

DIST	COUNTY	ROUTE	KILOMETER POST TOTAL PROJECT	SHEET NO.	TOTAL SHEETS

Caltrans Metric

REGISTERED CIVIL ENGINEER

July 1, 2004
PLANS APPROVAL DATE

REGISTERED PROFESSIONAL ENGINEER Ellis K. Hirst No. C17926 Exp. 6-30-05 CIVIL STATE OF CALIFORNIA

The State of California or its officers or agents shall not be responsible for the accuracy or completeness of electronic copies of this plan sheet.

To get to the Caltrans web site, go to: http://www.dot.ca.gov

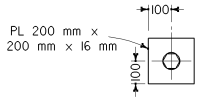

DETAIL A
CABLE CONNECTION
END PLATE

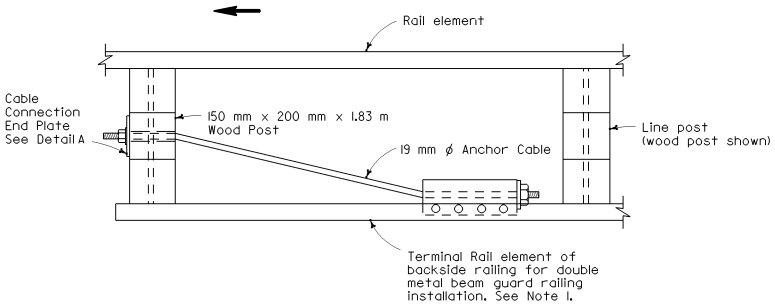

PLAN

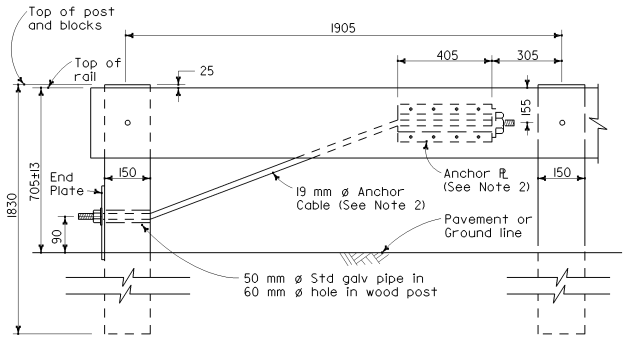

ELEVATION
RAIL TENSIONING
ASSEMBLY
See Note 1

NOTES

1. See Standard Plan A77F3 and Standard Plan A77G1 for typical use of rail tensioning assembly.
2. For details of the anchor plate and 19 mm cable, see Standard Plan A77H3.
3. Direction of traffic indicated by ⟶ .

STATE OF CALIFORNIA
DEPARTMENT OF TRANSPORTATION

METAL RAILING
RAIL TENSIONING ASSEMBLY

NO SCALE

ALL DIMENSIONS ARE IN
MILLIMETERS UNLESS OTHERWISE SHOWN

A77H2

04-30-04

2004 Std PLAN A77H2

Back to Table of Contents

DIST	COUNTY	ROUTE	KILOMETER POST TOTAL PROJECT	SHEET NO.	TOTAL SHEETS

Caltrans Metric

REGISTERED CIVIL ENGINEER

July 1, 2004
PLANS APPROVAL DATE

REGISTERED PROFESSIONAL ENGINEER Ellis K. Hirst No. C17926 Exp. 6-30-05 CIVIL STATE OF CALIFORNIA

The State of California or its officers or agents shall not be responsible for the accuracy or completeness of electronic copies of this plan sheet.

To get to the Caltrans web site, go to: http://www.dot.ca.gov

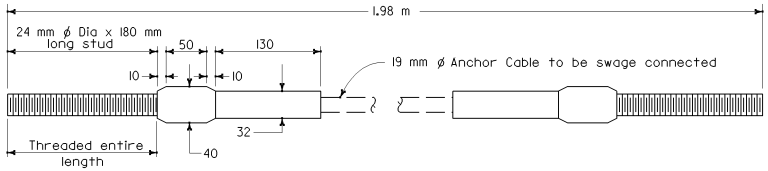

ANCHOR CABLE WITH SWAGED FITTING AND STUD

DETAIL E

NOTE

1. See Standard Plan A77H1 and Standard Plan A77H2 for typical use of anchor cable and anchor plate.

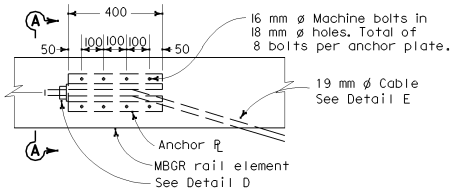

ANCHOR PLATE DETAIL

(MBGR shown, TBB similar)

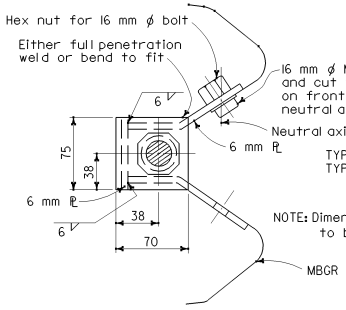

SECTION A-A
(ALTERNATIVE TYPE 1)

SECTION A-A
(ALTERNATIVE TYPE 2)

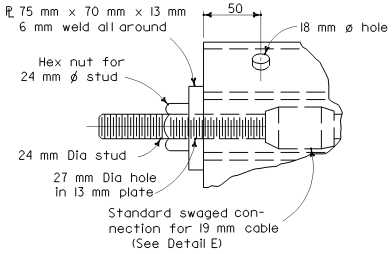

DETAIL D

STATE OF CALIFORNIA
DEPARTMENT OF TRANSPORTATION

METAL RAILING ANCHOR CABLE AND ANCHOR PLATE DETAILS

NO SCALE

ALL DIMENSIONS ARE IN MILLIMETERS UNLESS OTHERWISE SHOWN

A77H3

04-30-04

Back to Table of Contents

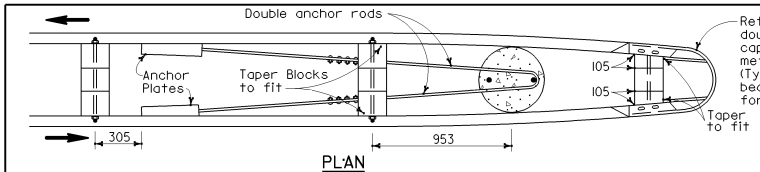

PLAN

See Note 4

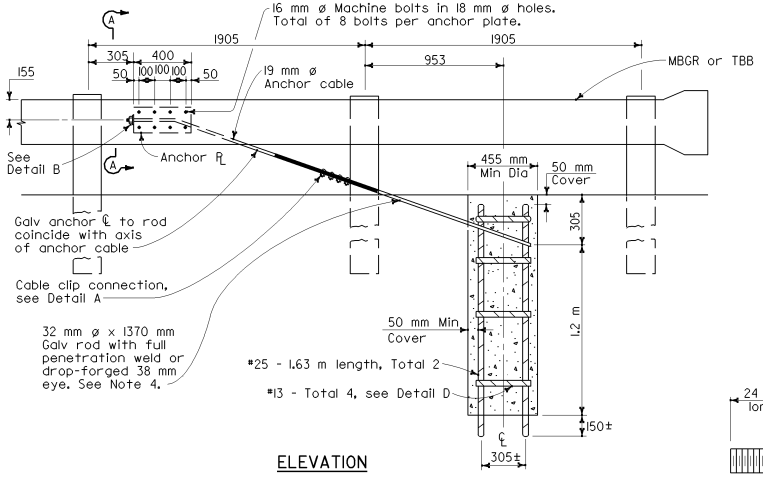

ELEVATION

END ANCHOR ASSEMBLY (TYPE CA)

(Wood post, metal beam guard railing shown, details similar for Thrie Beam Barrier.)

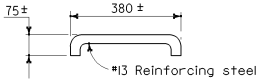

DETAIL D

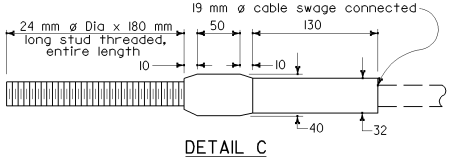

DETAIL C

ANCHOR CABLE WITH SWAGED FITTING AND STUD

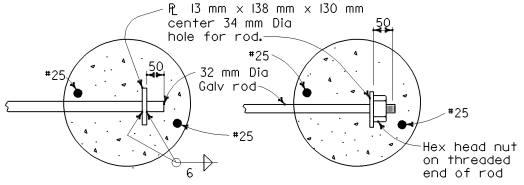

OPTIONAL ENDS ON SINGLE ANCHOR ROD

(Not to be used for double anchors)

NOTE

Use two 32 mm ø dia Galv rods with hook and eye for double guard rail anchor.

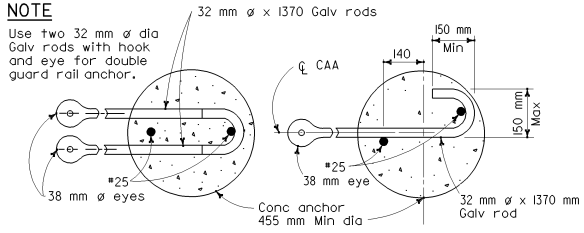

DOUBLE ANCHOR SINGLE ANCHOR

ANCHOR RODS

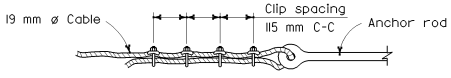

"U" bolts of clip on short end of cable only
"U" bolts tightened to 70 N·m torque

DETAIL A

CABLE CLIP CONNECTION

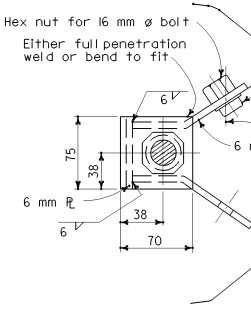

SECTION A-A

(Alternative Type 1)

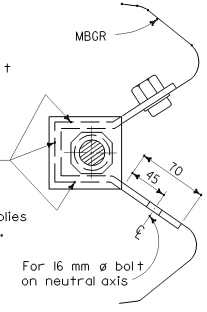

SECTION A-A

(Alternative Type 2)

ANCHOR PLATE DETAILS

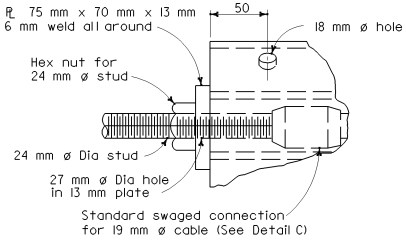

DETAIL B

NOTES

1. For typical use of this type of end anchor, see Standard Plan A78E2.
2. Anchor cable to be parallel to railing for straight runs of rail. Anchor cable may have angle point at anchor plate if railing is curved.
3. Anchor rod hooks to be in contact with anchor reinforcement when concrete is placed. Wire ties may be used to position anchor rods.
4. Single sided railing installations require only one anchor plate, anchor rod and anchor cable. Single sided railing will not have a rail element or blockouts on backside of line posts as shown in the plan view.

Caltrans Metric

DIST	COUNTY	ROUTE	KILOMETER POST TOTAL PROJECT	SHEET NO.	TOTAL SHEETS

REGISTERED CIVIL ENGINEER

July 1, 2004

PLANS APPROVAL DATE

REGISTERED PROFESSIONAL ENGINEER Ellis K. Hirst No. C17926 Exp. 6-30-05 CIVIL STATE OF CALIFORNIA

The State of California or its officers or agents shall not be responsible for the accuracy or completeness of electronic copies of this plan sheet.

To get to the Caltrans web site, go to: http://www.dot.ca.gov

2004 Std PLAN A77I1

STATE OF CALIFORNIA
DEPARTMENT OF TRANSPORTATION

METAL RAILING END ANCHOR ASSEMBLY (TYPE CA)

NO SCALE

ALL DIMENSIONS ARE IN MILLIMETERS UNLESS OTHERWISE SHOWN

A77I1

05-24-04

Back to Table of Contents

DIST	COUNTY	ROUTE	KILOMETER POST TOTAL PROJECT	SHEET NO.	TOTAL SHEETS

Caltrans Metric

REGISTERED CIVIL ENGINEER

July 1, 2004
PLANS APPROVAL DATE

REGISTERED PROFESSIONAL ENGINEER
Ellis K. Hirst
No. C17926
Exp. 6-30-05
CIVIL
STATE OF CALIFORNIA

The State of California or its officers or agents shall not be responsible for the accuracy or completeness of electronic copies of this plan sheet.

To get to the Caltrans web site, go to: http://www.dot.ca.gov

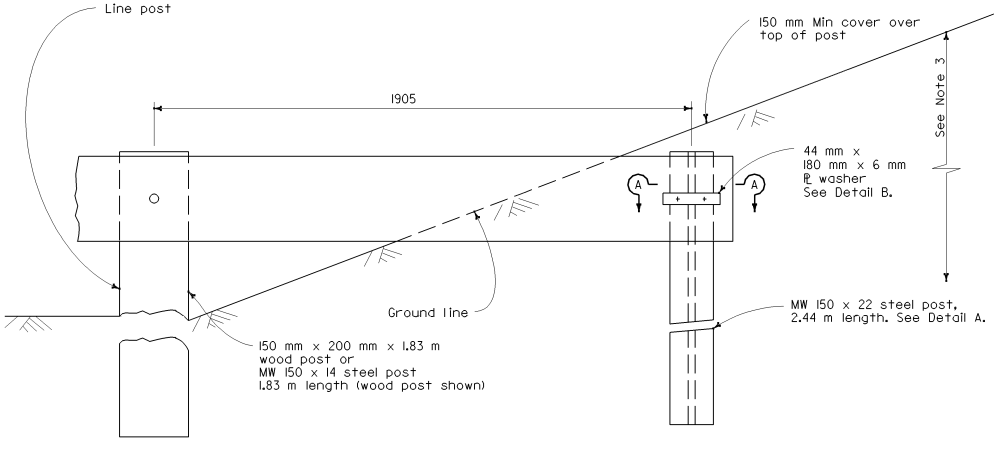

BURIED POST END ANCHOR

See Note 3

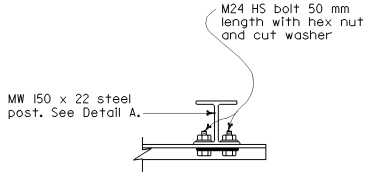

SECTION A-A

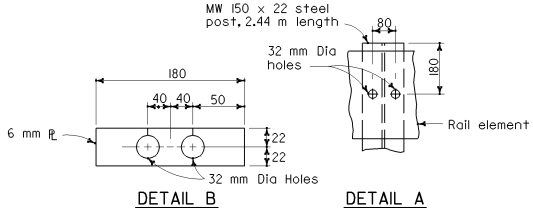

DETAIL B

DETAIL A

NOTES

1. For typical use of this type of end anchor, with guard railing, see the A77E, A77F and A77G Series of the Standard Plans.
2. Holes excavation in the slope to construct the buried post end anchor shall be backfilled with selected earth, placed in layers approximately 0.3 meters thick. Each layer shall be moistened and thoroughly compacted.
3. The buried post end anchor shall only be constructed at those locations where the slope perpendicular to the roadway is non-traversable.

STATE OF CALIFORNIA
DEPARTMENT OF TRANSPORTATION

METAL BEAM GUARD RAILING BURIED POST END ANCHOR

NO SCALE

ALL DIMENSIONS ARE IN MILLIMETERS UNLESS OTHERWISE SHOWN

A77I2

2004 Std PLAN A77I2

05-05-04

Back to Table of Contents

NOTES

1. See Standard Plan A77J2 for additional connection details to bridges without sidewalks.
2. Additional details of posts, blocks and hardware are shown on Standard Plan A77B1, A77C1 and A77C2.
3. Direction of adjacent traffic indicated by ➡ .
4. For additional details of Transition Railing (Type WB), see Standard Plan A77J4. Transition Railing (Type WB) transitions the 12 gage w-beam standard railing section of guard railing to a heavier gage nested thrie beam railing section which is connected to the concrete bridge railing.
5. For typical use of Connection Detail AA, see Layout Types 12A and 12B on Standard Plan A77F1, Layout Types 12C and 12D on Standard Plan A77F2, and Layout Type 12E on Standard Plan A77F3.
6. For typical use of Connection Detail BB, see Layout Type 12D (structure departure railing connection) on Standard Plan A77F2 and Layout Type 12DD on Standard Plan A77F5.
7. Where the height of the bridge railing exceeds the height of the thrie beam railing by more than 25 mm at Connection Detail AA, taper the top of the end of the bridge railing at 1:4 to match the top elevation of the thrie beam rail.

Caltrans Metric

DIST	COUNTY	ROUTE	KILOMETER POST TOTAL PROJECT	SHEET NO.	TOTAL SHEETS

REGISTERED CIVIL ENGINEER

July 1, 2004
PLANS APPROVAL DATE

REGISTERED PROFESSIONAL ENGINEER Ellis K. Hirst No. C17926 Exp. 6-30-05 CIVIL STATE OF CALIFORNIA

The State of California or its officers or agents shall not be responsible for the accuracy or completeness of electronic copies of this plan sheet.

To get to the Caltrans web site, go to: http://www.dot.ca.gov

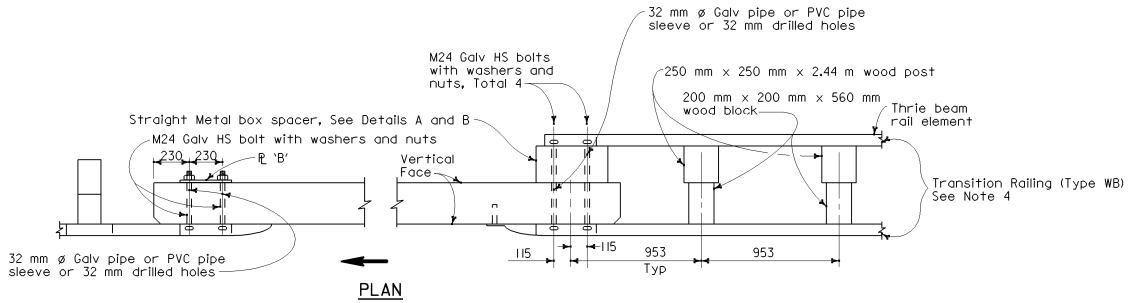

PLAN

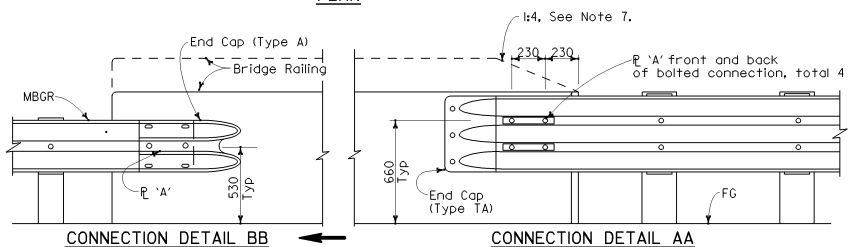

CONNECTION DETAIL BB
See Notes 6

ELEVATION

CONNECTION DETAIL AA
See Notes 5

GUARD RAILING CONNECTION TO BRIDGE RAILING WITHOUT SIDEWALK

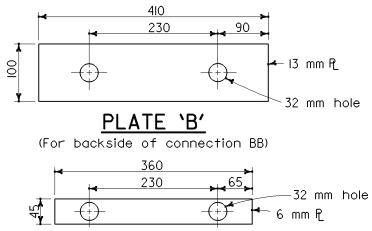

PLATE 'B'
(For backside of connection BB)

PLATE 'A'

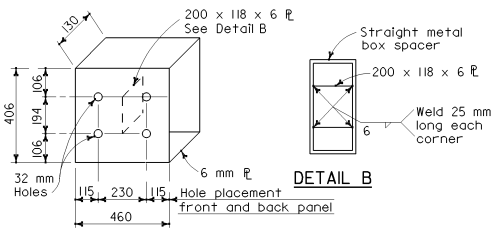

DETAIL A

DETAIL B

STRAIGHT METAL BOX SPACER

STATE OF CALIFORNIA
DEPARTMENT OF TRANSPORTATION

METAL BEAM GUARD RAILING CONNECTIONS TO BRIDGE RAILINGS WITHOUT SIDEWALKS DETAILS No. 1

NO SCALE

ALL DIMENSIONS ARE IN MILLIMETERS UNLESS OTHERWISE SHOWN

A77J1

2004 Std PLAN A77J1

05-24-04

Back to Table of Contents

DIST	COUNTY	ROUTE	KILOMETER POST TOTAL PROJECT	SHEET NO.	TOTAL SHEETS

Caltrans Metric

REGISTERED CIVIL ENGINEER

July 1, 2004
PLANS APPROVAL DATE

REGISTERED PROFESSIONAL ENGINEER Ellis K. Hirst No. C17926 Exp. 6-30-05 CIVIL STATE OF CALIFORNIA

The State of California or its officers or agents shall not be responsible for the accuracy or completeness of electronic copies of this plan sheet.

To get to the Caltrans web site, go to: http://www.dot.ca.gov

NOTES

1. See Standard Plan A77J1 for additional connection details to bridges without sidewalks.
2. Additional details of posts, blocks and hardware are shown on Standard Plan A77B1, A77C1 and A77C2.
3. Direction of adjacent traffic indicated by ⟶ .
4. For additional details of Transition Railing (Type WB), see Standard Plan A77J4. Transition Railing (Type WB) transitions the 12 gage w-beam standard railing section of guard railing to a heavier gage nested thrie beam railing section which is connected to the concrete bridge railing.
5. For typical use of Connection Detail AA, see Layout Types 12A and 12B on Standard Plan A77F1, Layout Types 12C and 12D on Standard Plan A77F2, and Layout Type 12E on Standard Plan A77F3.
6. For typical use of Connection Detail CC, see Layout Types 12AA and 12BB on Standard Plan A77F4 and Layout Type 12CC on Standard Plan A77F5
7. Where the height of the bridge railing exceeds the height of the thrie beam railing by more than 25 mm at Connection Detail AA, taper the top of the end of the bridge railing at 1:4 to match the top elevation of the thrie beam railing.

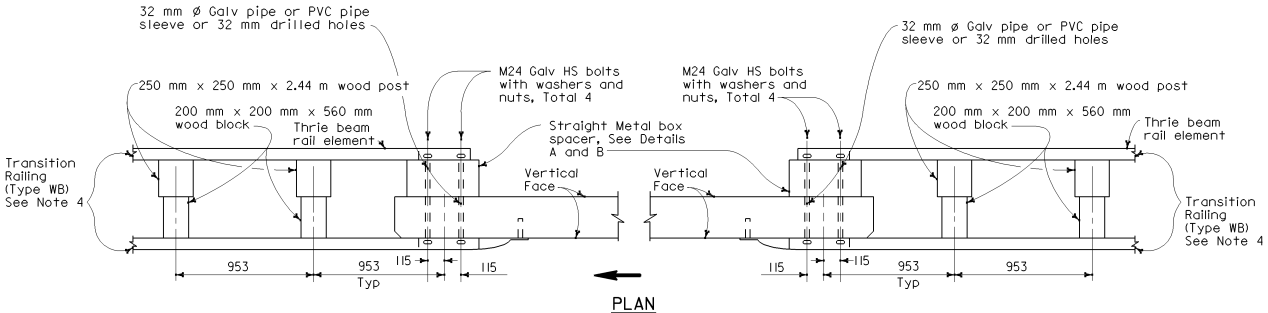

PLAN

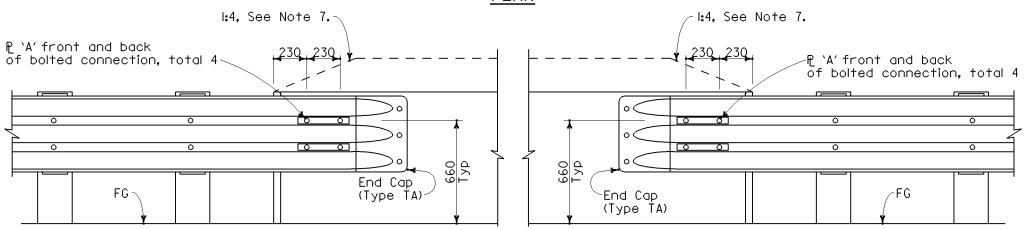

CONNECTION DETAIL CC
See Notes 6

ELEVATION

CONNECTION DETAIL AA
See Notes 5

GUARD RAILING CONNECTION TO BRIDGE RAILING WITHOUT SIDEWALK

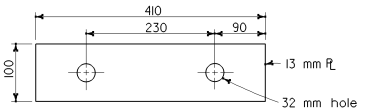

PLATE 'B'
(For backside of connection BB)

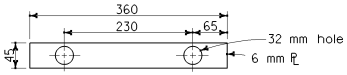

PLATE 'A'

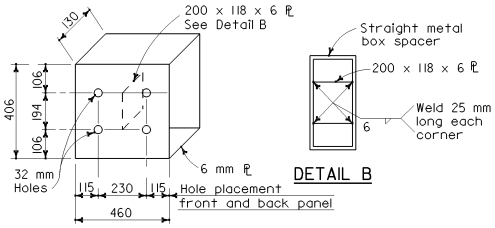

DETAIL B

DETAIL A

STRAIGHT METAL BOX SPACER

STATE OF CALIFORNIA
DEPARTMENT OF TRANSPORTATION

METAL BEAM GUARD RAILING CONNECTIONS TO BRIDGE RAILINGS WITHOUT SIDEWALKS DETAILS No. 2

NO SCALE

ALL DIMENSIONS ARE IN MILLIMETERS UNLESS OTHERWISE SHOWN

A77J2

2004 Std PLAN A77J2

05-24-04

Back to Table of Contents

DIST	COUNTY	ROUTE	KILOMETER POST TOTAL PROJECT	SHEET NO.	TOTAL SHEETS

Caltrans Metric

REGISTERED CIVIL ENGINEER

July 1, 2004
PLANS APPROVAL DATE

REGISTERED PROFESSIONAL ENGINEER Ellis K. Hirst No. C17926 Exp. 6-30-05 CIVIL STATE OF CALIFORNIA

The State of California or its officers or agents shall not be responsible for the accuracy or completeness of electronic copies of this plan sheet.

To get to the Caltrans web site, go to: http://www.dot.ca.gov

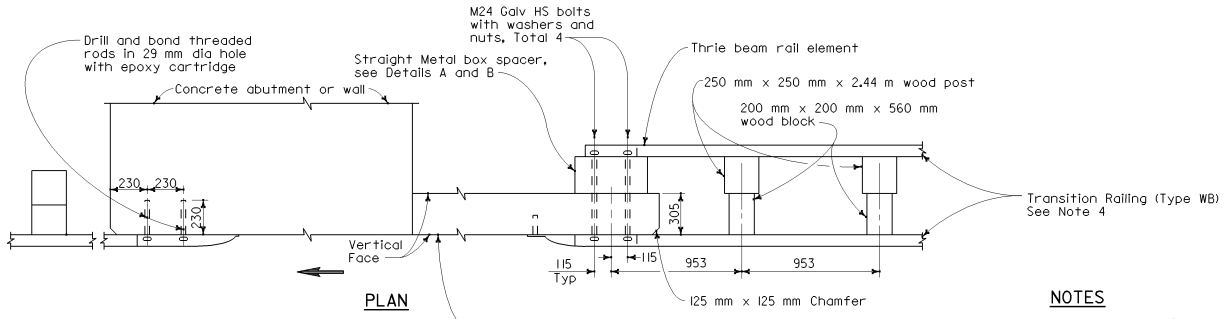

PLAN

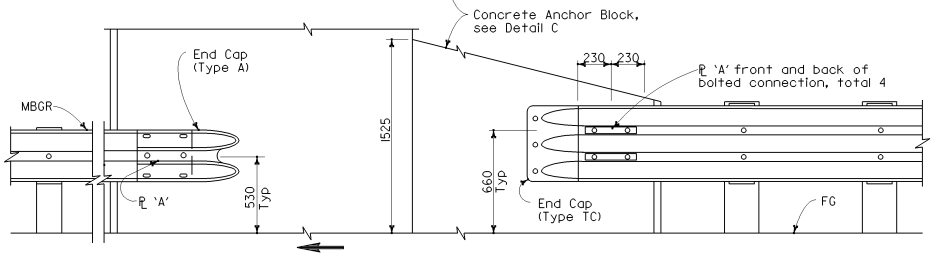

CONNECTION DETAIL EE
See Note 6

ELEVATION

CONNECTION DETAIL DD
See Note 5

GUARD RAILING CONNECTION TO ABUTMENT OR WALL

NOTES

1. These connection details apply to abutments and walls.
2. Additional details of posts, blocks and hardware are shown on Standard Plans A77B1, A77C1 and A77C2.
3. Direction of adjacent traffic indicated by ➡ .
4. For additional details of Transition Railing (Type WB), see Standard Plan A77J4 Transition Railing (Type WB) transitions the 12 gage w-beam standard railing section of guard railing to a heavier gage nested thrie beam railing section which is connected to the concrete anchor block.
5. For typical use of Connection Details DD, See Layout Types 12A and 12B on Standard Plan A77F1 and Layout Types 12C and 12D on Standard Plan A77F2.
6. For typical use of Connection Detail EE, see Layout Type 12D on Standard Plan A77F2 and Layout Type 12DD on Standard Plan A77F5.

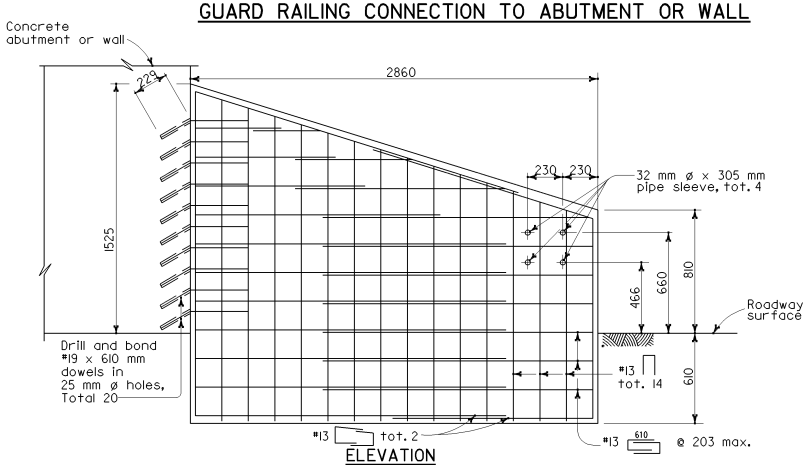

ELEVATION

ANCHOR BLOCK FOR TRANSITION RAILING CONNECTION

DETAIL C

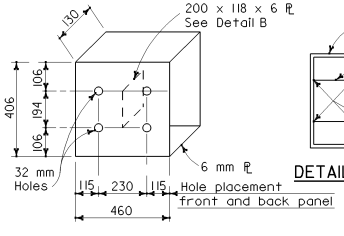

DETAIL A

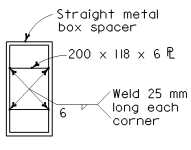

DETAIL B

STRAIGHT METAL BOX SPACER

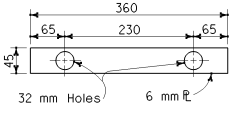

PLATE 'A'

STATE OF CALIFORNIA
DEPARTMENT OF TRANSPORTATION

METAL BEAM GUARD RAILING CONNECTIONS TO ABUTMENTS AND WALLS

NO SCALE

ALL DIMENSIONS ARE IN MILLIMETERS UNLESS OTHERWISE SHOWN

A77J3

05-24-04

Back to Table of Contents

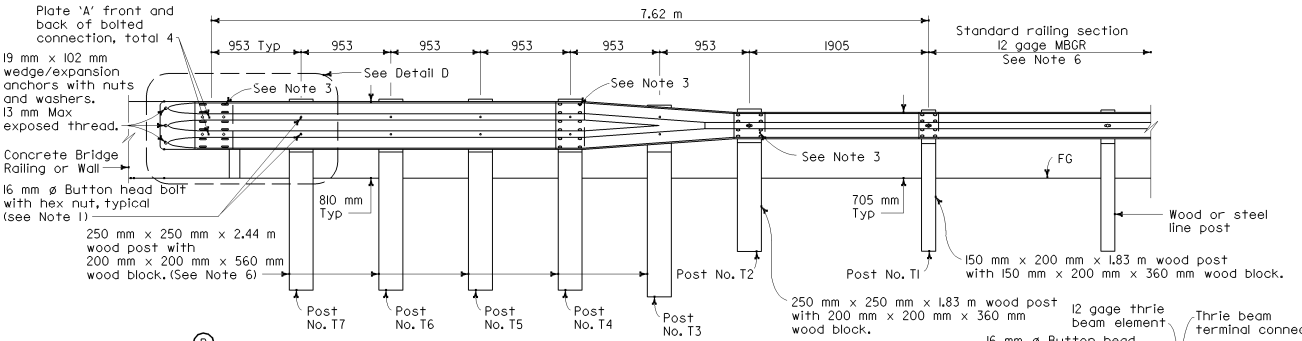

ELEVATION

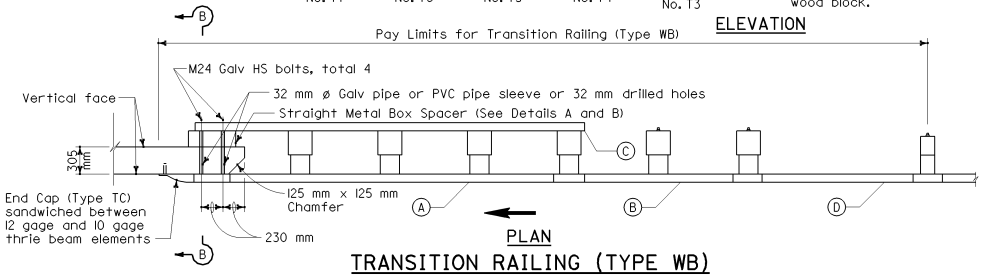

PLAN

TRANSITION RAILING (TYPE WB)

(Blockout Attachment)

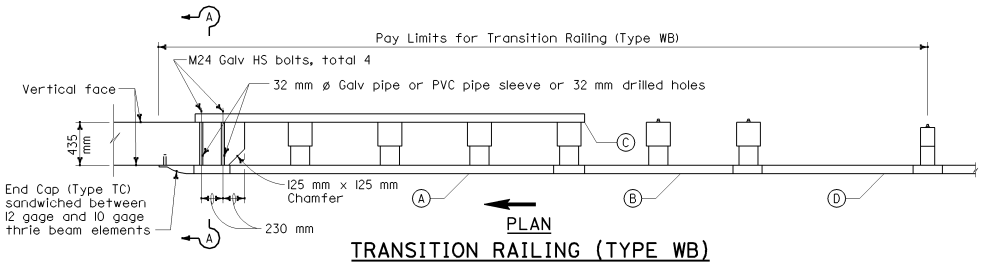

PLAN

TRANSITION RAILING (TYPE WB)

(No Blockout Attachment)

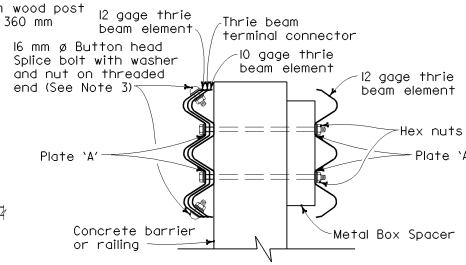

SECTION B-B

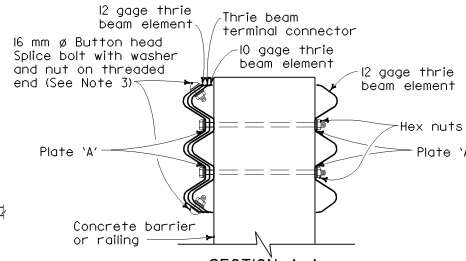

SECTION A-A

NOTES:

1. Use 16 mm ø Button head bolts and hex nuts for connections to posts. No washer on rail face for bolted connections to post.
2. The nested rail elements, end cap, and 'W' beam to thrie beam element may be spliced together prior to bolting the elements to the wood post and concrete barrier or railing.
3. Exterior splice bolt holes for rail splices at Post No. T4 and the connection to the concrete barrier or railing shall be the standard 23 mm x 29 mm slot size. Interior splice bolt holes at these locations may be increased up to 32 mm ø. Only the top 2 and the bottom 2 splice bolts with washers and nuts are required for rail splices at Post No. T4 and the connection to the concrete barrier or railing.
4. Direction of adjacent traffic indicated by →.
5. The top elevation of Post Nos. T2 through T7 shall not project more than 25 mm above the top elevation of the rail element.
6. Typically, the railing connected to Transition Railing (Type WB) will be either standard railing section of metal beam guard railing or an approved Caltrans end treatment attached to Post No. T1.

LEGEND

- (A) Nested thrie beam elements (one 12 gage element nested over one 10 gage element).
- (B) One 10 gage "W" beam to thrie beam element.
- (C) One 12 gage thrie beam element.
- (D) One 10 gage "W" beam rail element (2221 mm length)

10 gage = 3.43 mm thick

12 gage = 2.67 mm thick

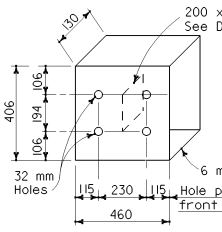

DETAIL A

STRAIGHT METAL BOX SPACER

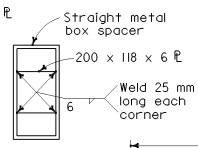

DETAIL B

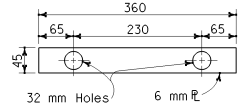

DETAIL C

PLATE 'A'

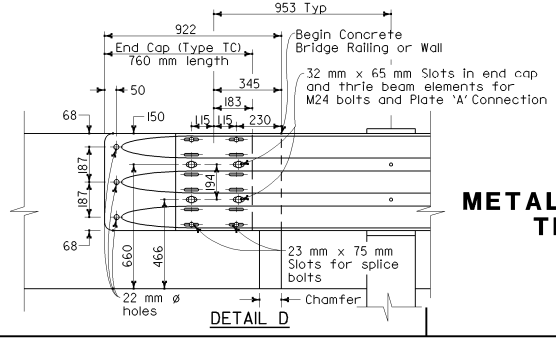

DETAIL D

STATE OF CALIFORNIA
DEPARTMENT OF TRANSPORTATION

METAL BEAM GUARD RAILING TRANSITION RAILING (TYPE WB)

NO SCALE

ALL DIMENSIONS ARE IN MILLIMETERS UNLESS OTHERWISE SHOWN

A77J4

Caltrans Metric

DIST	COUNTY	ROUTE	KILOMETER POST TOTAL PROJECT	SHEET NO.	TOTAL SHEETS

REGISTERED CIVIL ENGINEER

July 1, 2004
PLANS APPROVAL DATE

REGISTERED PROFESSIONAL ENGINEER Ellis K. Hirst No. C17926 Exp. 6-30-05 CIVIL STATE OF CALIFORNIA

The State of California or its officers or agents shall not be responsible for the accuracy or completeness of electronic copies of this plan sheet.

To get to the Caltrans web site, go to: http://www.dot.ca.gov

Back to Table of Contents

NOTES

1. See Standard Plan A77K2 for additional connection details to bridges with sidewalks.
2. Direction of adjacent traffic indicated by ⟶ .
3. For additional details of Transition Railing (Type WB), see Standard Plan A77J4. Transition Railing (Type WB) transitions the 12 gage w-beam standard railing section of guard railing to a heavier gage nested thrie beam railing which is connected to the concrete bridge railing.
4. For typical use of Connection Detail FF, see Layout Types 12A and 12B on Standard Plan A77F1.
5. For typical use of Connection Detail GG, see Layout Type 12D on Standard Plan A77F2 and Layout Type 12DD on Standard Plan A77F5.
6. Where the bridge sidewalk is not continued beyond the end of the bridge railing, the portion of the sidewalk beyond each end of the bridge railing shall be transitioned down from the top elevation of the sidewalk, for its entire width, to the finished grade of the adjacent roadbed. The longitudinal slope of each sidewalk elevation transition shall not exceed 8.33 percent.

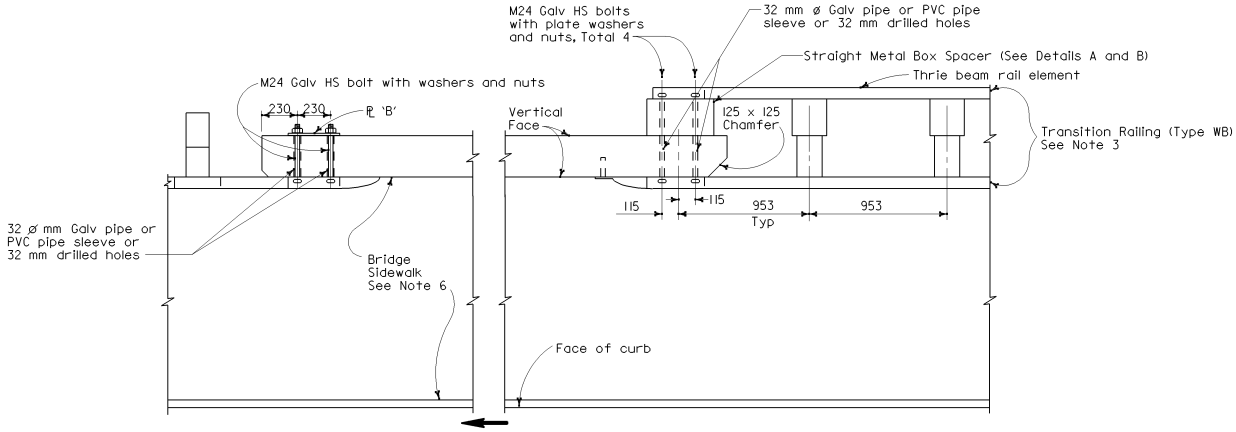

PLAN

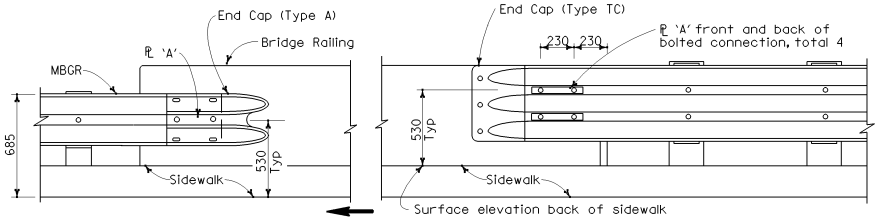

CONNECTION DETAIL GG
See Notes 5

ELEVATION

CONNECTION DETAIL FF
See Notes 4

GUARD RAILING CONNECTION TO BRIDGE RAILING WITH SIDEWALKS

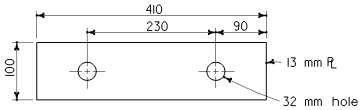

PLATE 'B'
(For backside of connection SB)

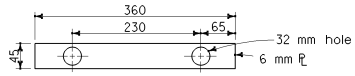

PLATE 'A'

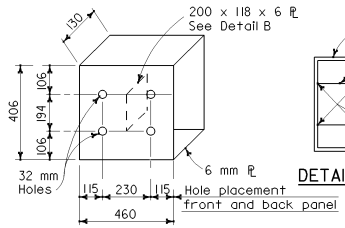

DETAIL A

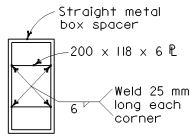

DETAIL B

STRAIGHT METAL BOX SPACER

Caltrans Metric

DIST	COUNTY	ROUTE	KILOMETER POST TOTAL PROJECT	SHEET NO.	TOTAL SHEETS

REGISTERED CIVIL ENGINEER

July 1, 2004
PLANS APPROVAL DATE

REGISTERED PROFESSIONAL ENGINEER Ellis K. Hirst No. C17926 Exp. 6-30-05 CIVIL STATE OF CALIFORNIA

The State of California or its officers or agents shall not be responsible for the accuracy or completeness of electronic copies of this plan sheet.

To get to the Caltrans web site, go to: http://www.dot.ca.gov

STATE OF CALIFORNIA
DEPARTMENT OF TRANSPORTATION

METAL BEAM GUARD RAILING CONNECTIONS TO BRIDGE RAILINGS WITH SIDEWALKS DETAILS No. 1

NO SCALE

ALL DIMENSIONS ARE IN MILLIMETERS UNLESS OTHERWISE SHOWN

A77K1

2004 Std PLAN A77K1

05-24-04

Back to Table of Contents

NOTES

1. See Standard Plan A77K1 for additional connection details to bridges with sidewalks.
2. Direction of adjacent traffic indicated by ➡ .
3. For additional details of Transition Railing (Type WB), see Standard Plan A77J4. Transition Railing (Type WB) transitions the 12 gage w-beam standard railing section of guard railing to a heavier gage nested thrie beam railing which is connected to the concrete bridge railing.
4. For typical use of Connection Detail FF, see Layout Types 12A and 12B on Standard Plan A77F1.
5. For typical use of Connection Detail HH, see Layout Types 12AA and 12BB on Standard Plan A77F4.
6. Where the bridge sidewalk is not continued beyond the end of the bridge railing, the portion of the sidewalk beyond each end of the bridge railing shall be transitioned down from the top elevation of the sidewalk, for its entire width, to the finished grade of the adjacent roadbed. The longitudinal slope of each sidewalk elevation transition shall not exceed 8.33 percent.

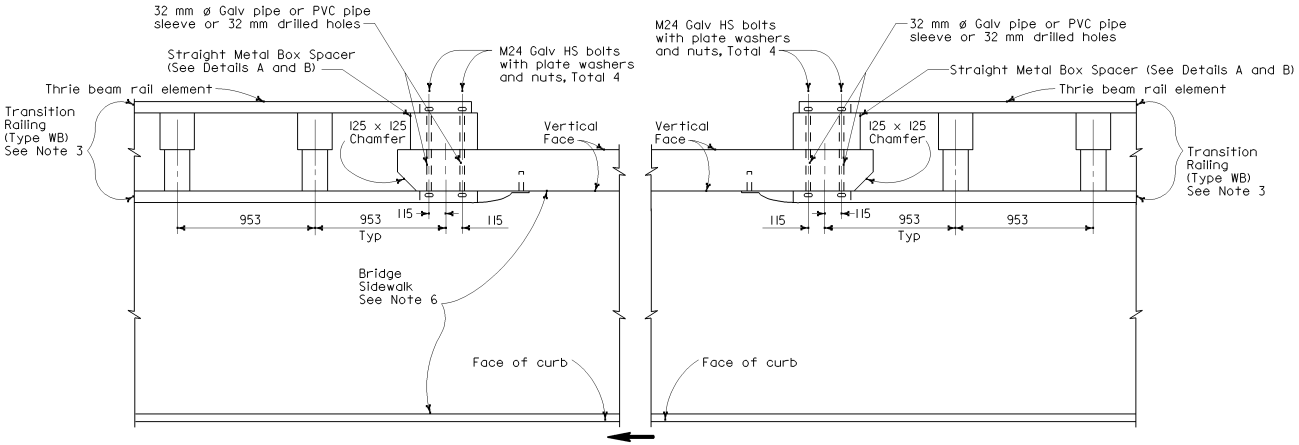

PLAN

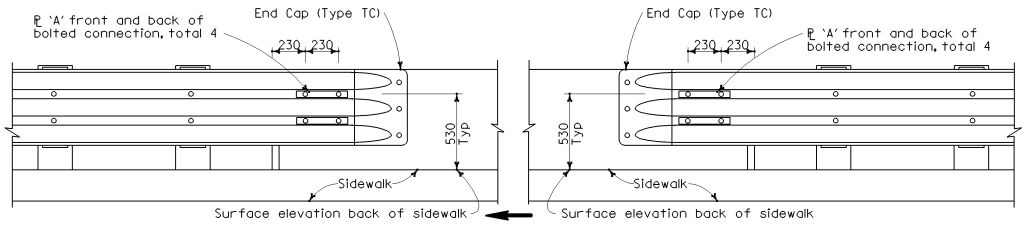

CONNECTION DETAIL HH
See Notes 5

CONNECTION DETAIL FF
See Notes 4

ELEVATION

GUARD RAILING CONNECTION TO BRIDGE RAILING WITH SIDEWALKS

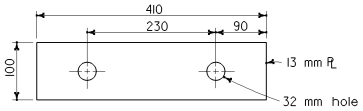

PLATE 'B'
(For backside of connection SB)

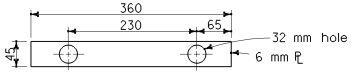

PLATE 'A'

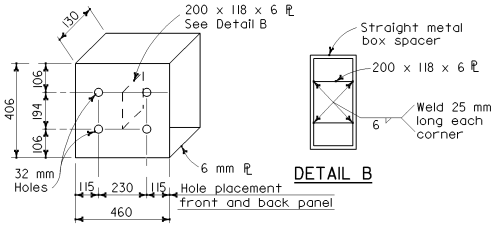

DETAIL B

DETAIL A

STRAIGHT METAL BOX SPACER

Caltrans Metric

DIST	COUNTY	ROUTE	KILOMETER POST TOTAL PROJECT	SHEET NO.	TOTAL SHEETS

REGISTERED CIVIL ENGINEER

July 1, 2004
PLANS APPROVAL DATE

REGISTERED PROFESSIONAL ENGINEER Ellis K. Hirst No. C17926 Exp. 6-30-05 CIVIL STATE OF CALIFORNIA

The State of California or its officers or agents shall not be responsible for the accuracy or completeness of electronic copies of this plan sheet.

To get to the Caltrans web site, go to: http://www.dot.ca.gov

STATE OF CALIFORNIA
DEPARTMENT OF TRANSPORTATION

METAL BEAM GUARD RAILING CONNECTIONS TO BRIDGE RAILINGS WITH SIDEWALKS DETAILS No.2

NO SCALE

ALL DIMENSIONS ARE IN MILLIMETERS UNLESS OTHERWISE SHOWN

A77K2

2004 Std PLAN A77K2

04-30-04

Back to Table of Contents

DIST	COUNTY	ROUTE	KILOMETER POST TOTAL PROJECT	SHEET NO.	TOTAL SHEETS

REGISTERED CIVIL ENGINEER

July 1, 2004
PLANS APPROVAL DATE

REGISTERED PROFESSIONAL ENGINEER Ellis K. Hirst No. C17926 Exp. 6-30-05 CIVIL STATE OF CALIFORNIA

The State of California or its officers or agents shall not be responsible for the accuracy or completeness of electronic copies of this plan sheet.

To get to the Caltrans web site, go to: http://www.dot.ca.gov

Caltrans Metric

TABLE A

POST OFFSET DIMENSIONS		
Post No.	915 mm System End Offset	1070 mm System End Offset
1	915 mm	1070 mm
2	565 mm	705 mm
3	300 mm	420 mm
4	170 mm	270 mm
5	75 mm	150 mm
6	20 mm	70 mm
7	0 mm	20 mm
8	0 mm	0 mm

See Note 12

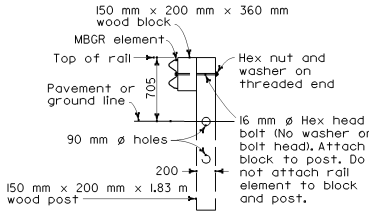

SECTION A-A

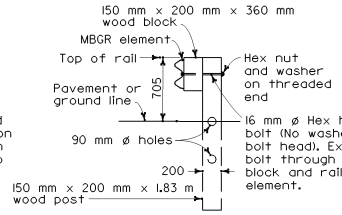

SECTION B-B

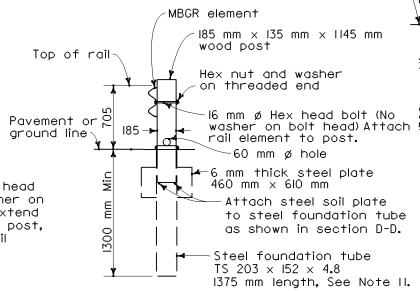

SECTION C-C

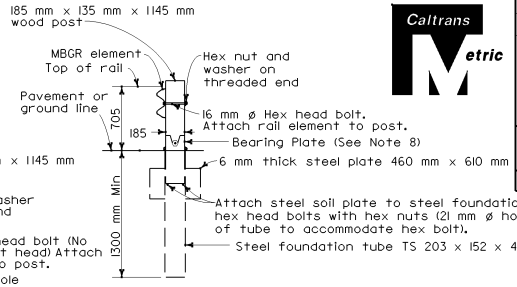

SECTION D-D
(Terminal Section not shown)

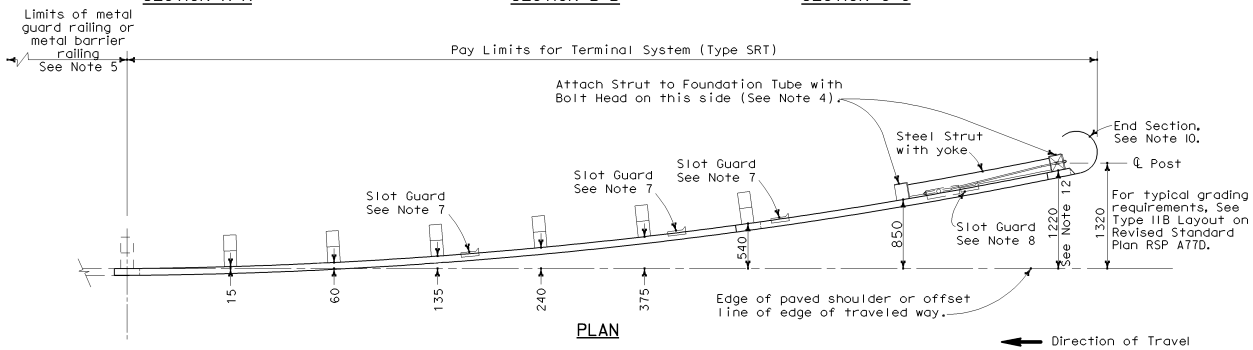

PLAN

Direction of Travel

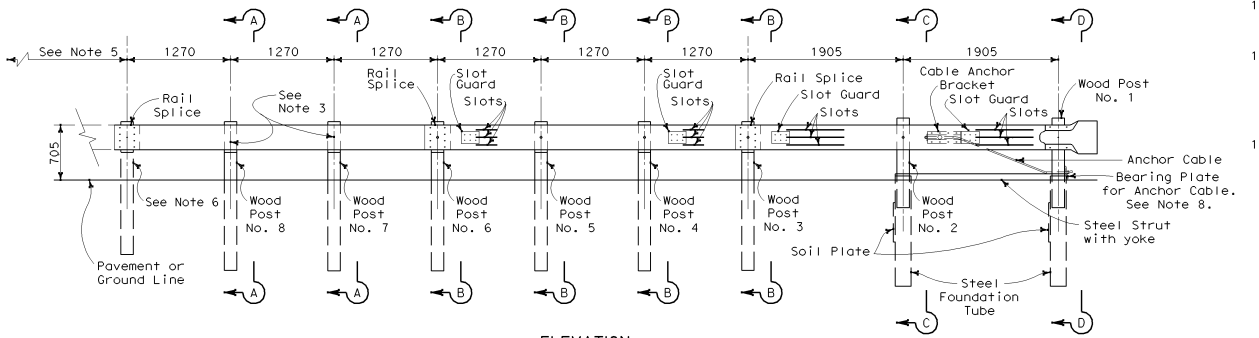

ELEVATION

TERMINAL SYSTEM (TYPE SRT)

(8 Post System)
See Note 9

NOTES:

1. For additional details of Terminal System (Type SRT), refer to the manufacturer's installation instructions.
2. The post offset dimensions are given to the center of the traffic face of the block, except at the first two posts, where the dimension is to the center of the traffic face of the post. Offset points are to be located by chord measurements at the back of the rail equal to the nominal post spacings shown. Posts are to be set approximately radial to the railing at each post locations.
3. Do not attach rail elements to posts 7 and 8.
4. Attach strut to Post Nos. 1 and 2 foundation tubes with 16 mm ø hex head bolts, washers and hex nuts. Bolts extend through the strut, steel foundation tube, and wood posts.
5. For the length and type of metal beam guard railing or metal barrier railing the terminal system is attached to, see the Project Plans.
6. Attach rail element to this post and block. Payment for this post, block and hardware is included in payment for the type of railing or barrier the terminal system is attached to, not part of payment for Terminal System (Type SRT).
7. The deflector angle of the slot guard is to be positioned immediatley downstream of the slots.
8. For bearing plate orientation, refer to the manufacturer's installation instructions.
9. For typical use of this terminal system with guard railing, see the A77E, A77F and A77G Series of Standard Plans. See Standard Plan A78E for typical use of this terminal system with single thrie beam barrier.
10. A complete wrap around end section may continued to be used in existing installations. New installations shall be constructed with the ¾wrap end section shown.
11. A 1830 mm length steel foundation tube, TS 203 x 152 x 4.8, without a soil plate, may be furnished and installed in place of the 1375 mm length steel foundation tube and soil plate shown. Minimum embedment of the 1830 mm length tube shall be 1760 mm. A 16 mm ø hex head bolt and nut shall be installed in the hole in 1830 mm length tube to keep the wood post from dropping into the tube.
12. Where site conditions will not accommodate use of the standard 1220 mm system end offset, 1070 mm or 915 mm system end offsets, as applicable, may be used. See Table A for post offset dimensions for 1070 mm and 915 mm system end offsets.

STATE OF CALIFORNIA
DEPARTMENT OF TRANSPORTATION

METAL BEAM RAILING TERMINAL SYSTEM (TYPE SRT)

NO SCALE

ALL DIMENSIONS ARE IN MILLIMETERS UNLESS OTHERWISE SHOWN

A77L1

2004 Std PLAN A77L1

05-24-04

Back to Table of Contents

DIST	COUNTY	ROUTE	KILOMETER POST TOTAL PROJECT	SHEET NO.	TOTAL SHEETS

Caltrans Metric

REGISTERED CIVIL ENGINEER

July 1, 2004
PLANS APPROVAL DATE

REGISTERED PROFESSIONAL ENGINEER Ellis K. Hirst No. C17926 Exp. 6-30-05 CIVIL STATE OF CALIFORNIA

The State of California or its officers or agents shall not be responsible for the accuracy or completeness of electronic copies of this plan sheet.

To get to the Caltrans web site, go to: http://www.dot.ca.gov

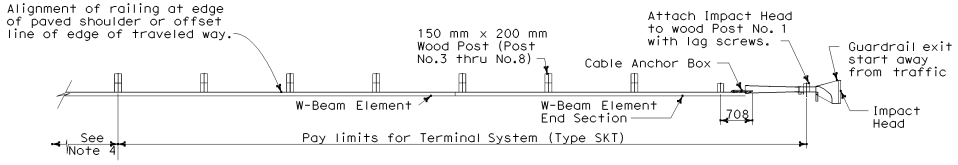

PLAN

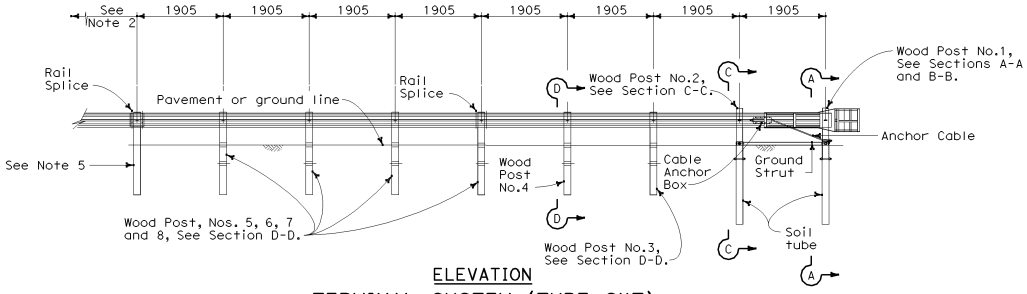

ELEVATION

TERMINAL SYSTEM (TYPE SKT)

NOTES

1. For additional details of Terminal System (Type SKT), refer to the manufacturer's installation instructions.
2. Terminal System (Type SKT) must be constructed so that the full length of the terminal system guard railing is in straight alignment. Terminal System (Type SKT) can be flared at a maximum rate of 25:1 to prevent the impact head from encroaching on the shoulder. The flare is not required and may be decreased or eliminated for specific installations.
3. Terminal System (Type SKT) not to be used where extrusion of the rail on the back side of the installation would be in the path of pedestrian traffic or where there is less than 7.62 m between the outlet side of the Impacted Head and any adjacent vehicle traffic.
4. For the length and type of metal beam guard railing or metal barrier railing the terminal system is attached to, see Project Plans. For typical use of this terminal system with guard railing, see the A77E, A77F and A77G Series of the Standard Plans.
5. Attach rail element to this post and block. Payment for this post, block and hardware is included in payment for the type of railing or barrier the terminal system is attached to, not part of payment for Terminal System (Type SKT).

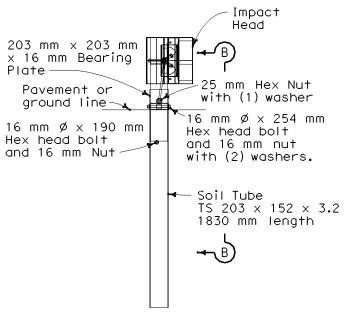

SECTION A-A
Post No. 1

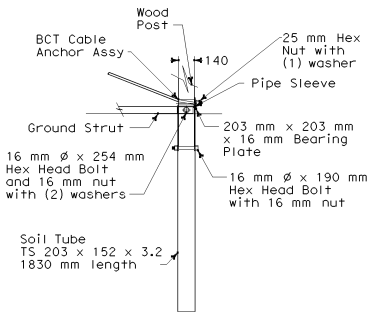

SECTION B-B
Partial view Post No. 1

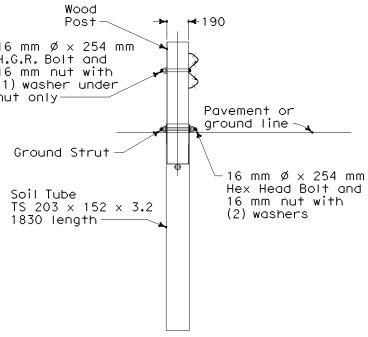

SECTION C-C
at Post #2

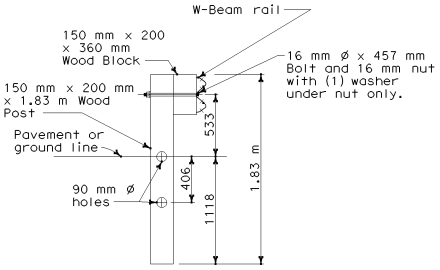

SECTION D-D
Post No. 3 through No. 8.

STATE OF CALIFORNIA
DEPARTMENT OF TRANSPORTATION

METAL BEAM RAILING TERMINAL SYSTEM (TYPE SKT)

NO SCALE

ALL DIMENSIONS ARE IN MILLIMETERS UNLESS OTHERWISE SHOWN

A77L2

2004 Std PLAN A77L2

05-10-04

Back to Table of Contents

NOTES

1. For additional details of Terminal System (Type ET), refer to the manufacturer's installation instructions.
2. Terminal System (Type ET) must be constructed so that the full length of the terminal system guard railing is in straight alignment. The Guard Rail Extruder head of the terminal system shall not encroach upon the adjacent paved shoulder or lane. A traffic approach flare of 25:1 for the full length of Terminal System (Type ET) installation may be used where the Guard Rail Extruder head would encroach upon the adjacent paved shoulder or lane.
3. Slide Guard Rail Extruder over the end of the rail element and attach to Post No. 1 with lag screws. Do not bolt rail element to post. Guard Rail Extruder attachment brackets have 3 holes in each bracket to provide tolerance adjustment. Use the holes in the bracket closest to center of Post No. 1. Drill 6 mm pilot holes to accommodate lag screws.
4. Attach strut to Post Nos. 1 and 2 foundation tubes with hex head bolts, washers and hex nuts. Bolts extend through the strut, steel foundation tube, and wood posts. Channel side of strut to face downward.
5. For length and type of metal beam guard railing or metal barrier railing the terminal system is attached to, see Project Plans. For typical use of this terminal system, see the A77E, A77F and A77G Series of the Standard Plans.
6. Attach rail element to this post and block. Payment for this post, block and hardware included in payment for the type of railing or barrier the terminal system is attached to, not part of the payment for Terminal System (Type ET).
7. Yellow retroreflective sheeting, as provided by Terminal System (Type ET) manufacturer, shall be adhered to the face of extruder head. The sheeting shall be consistent with the design pattern and colors of a Type P object marker panel.
8. Attach rail to Post No. 2 (no wood block) in same manner shown in section A-A. Do not bolt rail to Post No. 1, See Note 3.
9. Terminal System (Type ET) not to be used where extrusion of the rail on the back side of the installation would be in the path of pedestrian or vehicular traffic.
10. A continuous rail element section between Post Nos. 1 and 5 (no intermediate rail splices) may continue to be used in existing installations. New installations shall be constructed as shown width two rail element sections between Post Nos. 1 and 5.
11. A 1830 mm length steel foundation tube, TS 203 x 152 x 4.8, without a soil plate, may be furnished and installed in place of the 1375 mm length steel foundation tube and soil plate shown. Minimum embedment of the 1830 mm length tube shall be 1760 mm. A 16 mm ø hex head bolt and nuts shall be installed in the hole in the 1830 mm length tube to keep the wood post from dropping into the tube.

Caltrans Metric

DIST	COUNTY	ROUTE	KILOMETER POST TOTAL PROJECT	SHEET NO.	TOTAL SHEETS

REGISTERED CIVIL ENGINEER

July 1, 2004
PLANS APPROVAL DATE

REGISTERED PROFESSIONAL ENGINEER Ellis K. Hirst No. C17926 Exp. 6-30-05 CIVIL STATE OF CALIFORNIA

The State of California or its officers or agents shall not be responsible for the accuracy or completeness of electronic copies of this plan sheet.

To get to the Caltrans web site, go to: http://www.dot.ca.gov

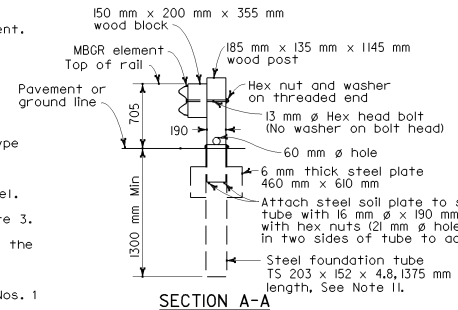

SECTION A-A

Soil plate and wood post attachment to steel foundation tube similar for Post Nos. 1, 2 and 4. Wood blocks not used with Post Nos. 1 and 2. See Note 8.

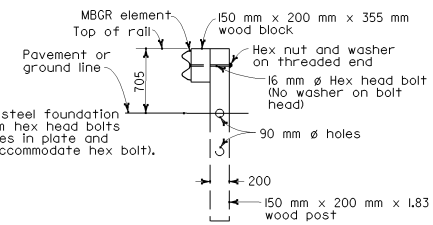

SECTION B-B

Post Nos. 5, 7 and 8 similar except rail elements are not attached to Post Nos. 5 and 7

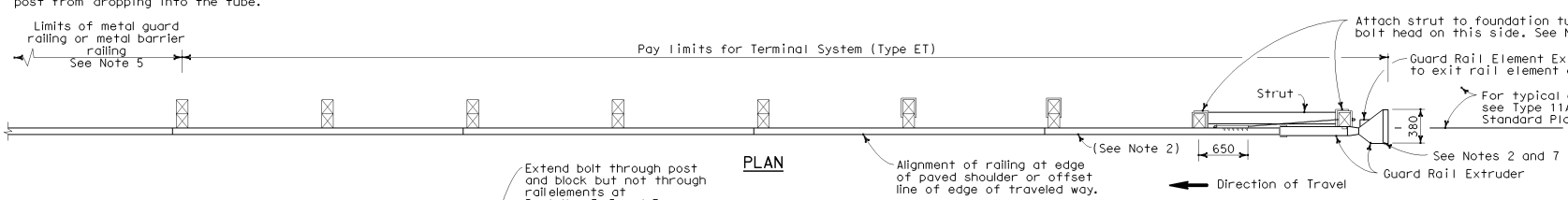

PLAN

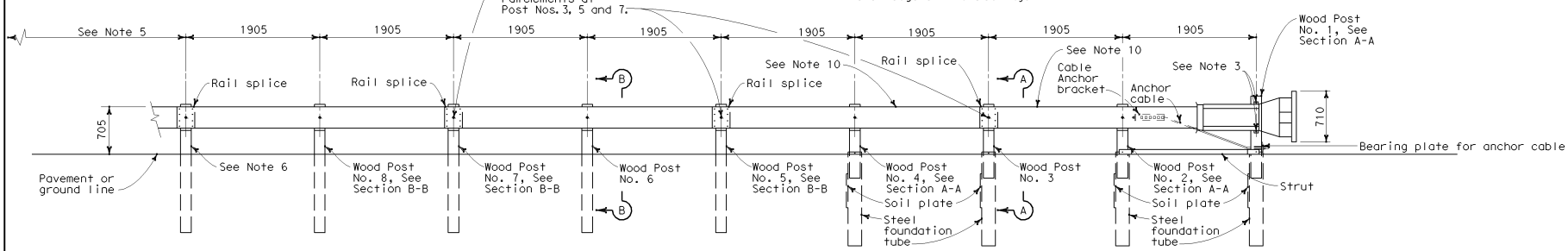

ELEVATION

TERMINAL SYSTEM (TYPE ET)

(Type ET PLUS shown)
See Notes 9 and 10

STATE OF CALIFORNIA
DEPARTMENT OF TRANSPORTATION

METAL BEAM RAILING TERMINAL SYSTEM (TYPE ET)

NO SCALE

ALL DIMENSIONS ARE IN MILLIMETERS UNLESS OTHERWISE SHOWN

A77L3

05-10-04

2004 Std PLAN A77L3

Back to Table of Contents

NOTES

1. For additional details of Terminal System (Type CAT), refer to the manufacturer's installation instructions.
2. Terminal System (Type CAT) to be used only in locations where there will be traffic on one side of the terminal system. For those locations where traffic would be on both sides of the CAT system, see Standard Plan A82A.
3. The Terminal System Backup is required for all Terminal System (Type CAT) installations. This allows the slotted rail elements to slide over the face of the unslotted rail elements.
4. For length and type of metal beam guard railing or metal barrier railing the terminal system is attached to, see Project Plans. For typical use of this terminal system with guard railing, see the A77E, A77F and A77G series of Standard Plans.
5. Both of the 3.43 mm thick slotted rail elements have an attachment plate welded to the back side of one end of each rail element. Attach the welded plate end of the rail elements to Post No. 4 prior to splicing the 2.67 mm thick slotted rail element over the 3.43 mm thick slotted rail element.
6. The 2.67 mm thick slotted rail elements have four 19 mm diameter holes near one end of the rail elements for the attachment of the spacer channel. Attach this end of the rail elements to Post No. 2.
7. For details of the anchor plate and 19 mm cable attached to Post No. 6, see Standard Plan A77H1.
8. Attach steel soil plate to steel foundation tube with 16 mm ø x 190 mm hex head bolts with hex nuts (21 mm ø holes in plate and in two sides of tube to accommodate hex bolts).
9. The 150 mm x 200 mm knockout tube is to be located 100 mm down from top of wood post. Attach the knockout tube to the post with two 10 mm ø lag screws and flat washers.
10. Attach strut to Post Nos.1 and 2 foundation tubes with 16 mm ø hex head bolts, washers, and hex nuts. Bolts extend through the strut, steel foundation tube, and wood posts.
11. Do not attach the rail elements to Post Nos.3, 5 and 6.
12. Yellow retroreflective sheeting, as provided by the Terminal System (Type CAT) manufacturer, shall be adhered to the rounded end of nose plate. The sheeting shall be consistent with the design pattern and colors of a Type P object marker panel. The sheeting shall be positioned on the end of nose plate so that it is visible to approaching traffic.
13. A 1830 mm length steel foundation tube, TS 203 x 152 x 4.8, without a soil plate, may be furnished and installed in place of the 1375 mm length steel foundation tube and soil plate shown. Minimum embedment of the 1830 mm length tube shall be 1760 mm. A 16 mm ø hex head bolt and nut shall be installed in the hole in 1830 mm length tube to keep the wood post from dropping into the tube.

Caltrans Metric

DIST	COUNTY	ROUTE	KILOMETER POST TOTAL PROJECT	SHEET NO.	TOTAL SHEETS

REGISTERED CIVIL ENGINEER

July 1, 2004
PLANS APPROVAL DATE

REGISTERED PROFESSIONAL ENGINEER Ellis K. Hirst No. C17926 Exp. 6-30-05 CIVIL STATE OF CALIFORNIA

The State of California or its officers or agents shall not be responsible for the accuracy or completeness of electronic copies of this plan sheet.

To get to the Caltrans web site, go to: http://www.dot.ca.gov

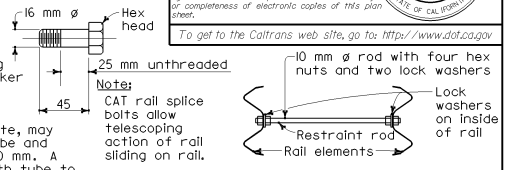

CAT RAIL SPLICE BOLT

Use at Post Nos. 4 and 6

SECTION D-D

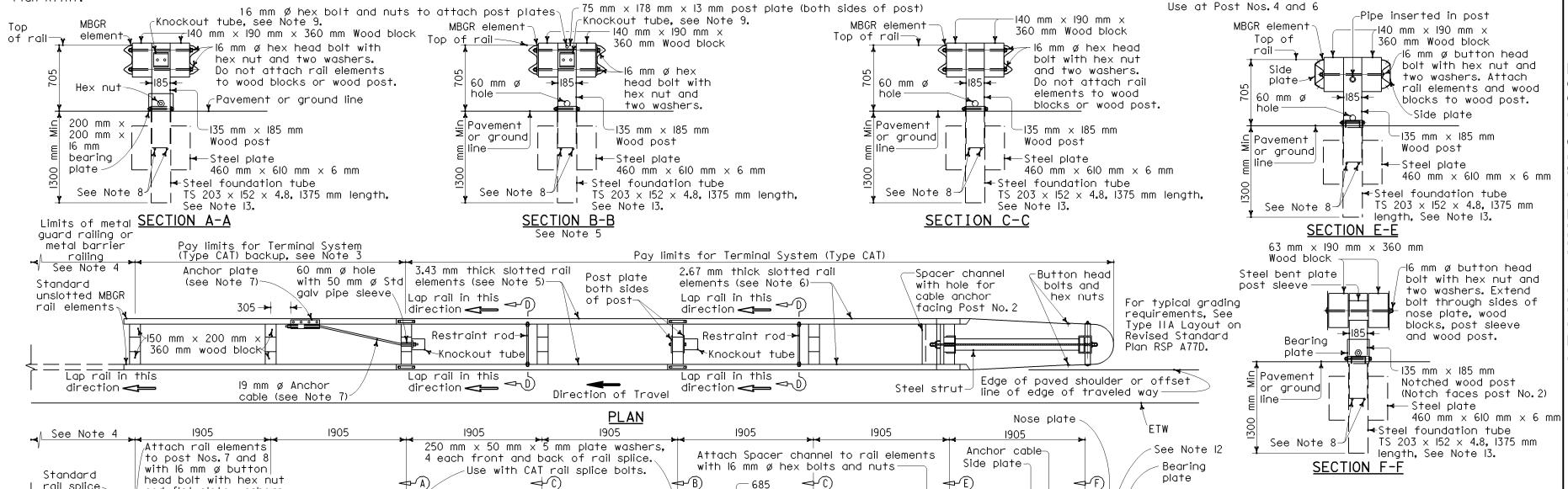

STATE OF CALIFORNIA
DEPARTMENT OF TRANSPORTATION

METAL BEAM RAILING TERMINAL SYSTEM (TYPE CAT)

NO SCALE

ALL DIMENSIONS ARE IN MILLIMETERS UNLESS OTHERWISE SHOWN

A77L4

2004 Std PLAN A77L4

05-07-04

Back to Table of Contents

DIST	COUNTY	ROUTE	KILOMETER POST TOTAL PROJECT	SHEET NO.	TOTAL SHEETS

Caltrans Metric

REGISTERED CIVIL ENGINEER

July 1, 2004
PLANS APPROVAL DATE

REGISTERED PROFESSIONAL ENGINEER Ellis K. Hirst No. C17926 Exp. 6-30-05 CIVIL STATE OF CALIFORNIA

The State of California or its officers or agents shall not be responsible for the accuracy or completeness of electronic copies of this plan sheet.

To get to the Caltrans web site, go to: http://www.dot.ca.gov

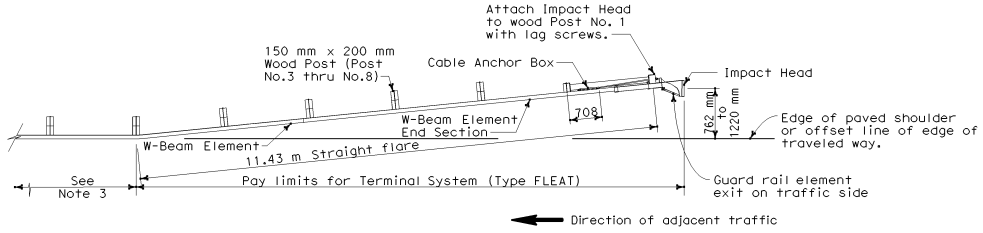

PLAN

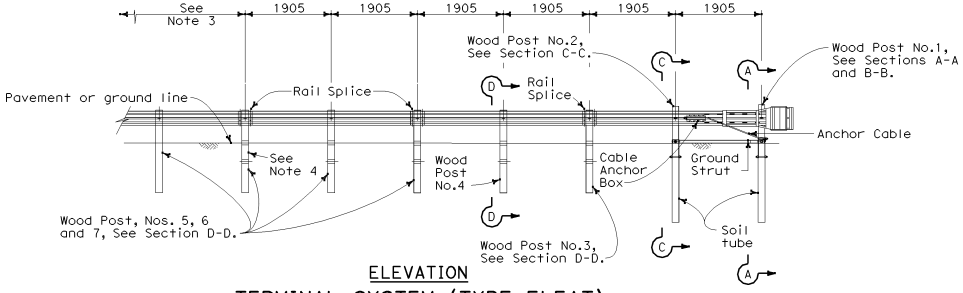

ELEVATION

TERMINAL SYSTEM (TYPE FLEAT)

NOTES

1. For additional details of Terminal System (Type FLEAT), refer to the manufacturer's installation instructions.
2. Terminal System (Type FLEAT) not to be used where extrusion of the rail on the front side of the installation would be in the path of pedestrian traffic.
3. For the length and type of metal beam guard railing or metal barrier railing the terminal system is attached to, see Project Plans. For typical use of this terminal system with guard railing, see the A77E, A77F and A77G Series of the Standard Plans.
4. Attach rail element to this post and block. Payment for this post, block and attaching hardware is included in payment for Terminal System (Type FLEAT).

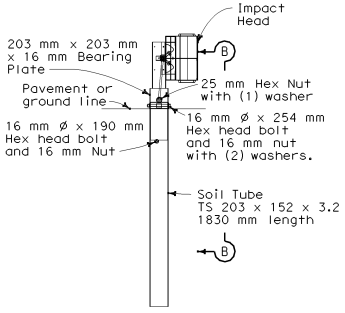

SECTION A-A
Post No. 1

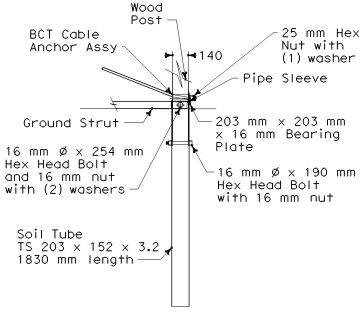

SECTION B-B
Partial view Post No. 1

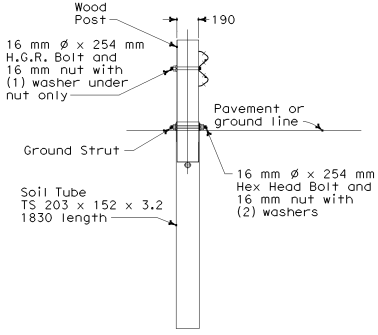

SECTION C-C
at Post No. 2

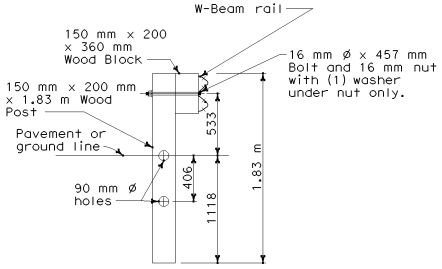

SECTION D-D
Post No. 3 through No. 7.

STATE OF CALIFORNIA
DEPARTMENT OF TRANSPORTATION

METAL BEAM RAILING TERMINAL SYSTEM (TYPE FLEAT)

NO SCALE

ALL DIMENSIONS ARE IN MILLIMETERS UNLESS OTHERWISE SHOWN

A77L5

05-10-04

2004 Std PLAN A77L5

Back to Table of Contents

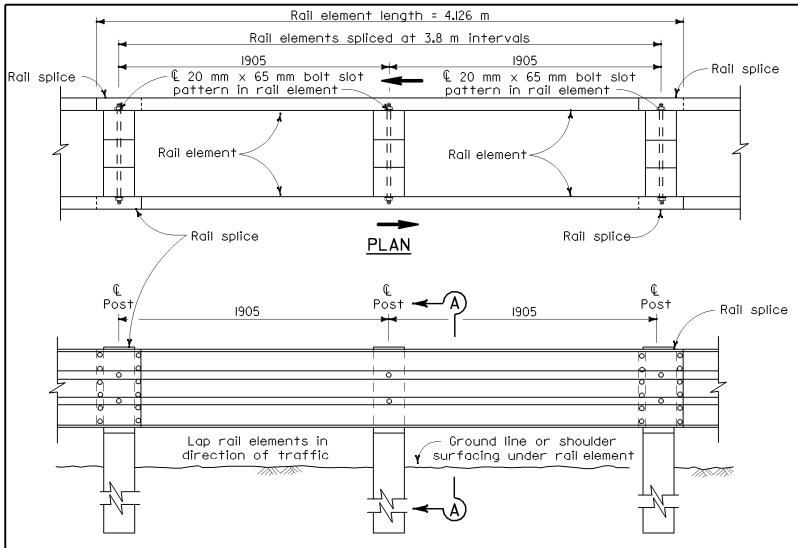

ELEVATION

DOUBLE THRIE BEAM BARRIER

(Wood post and blocks)
See Note 1

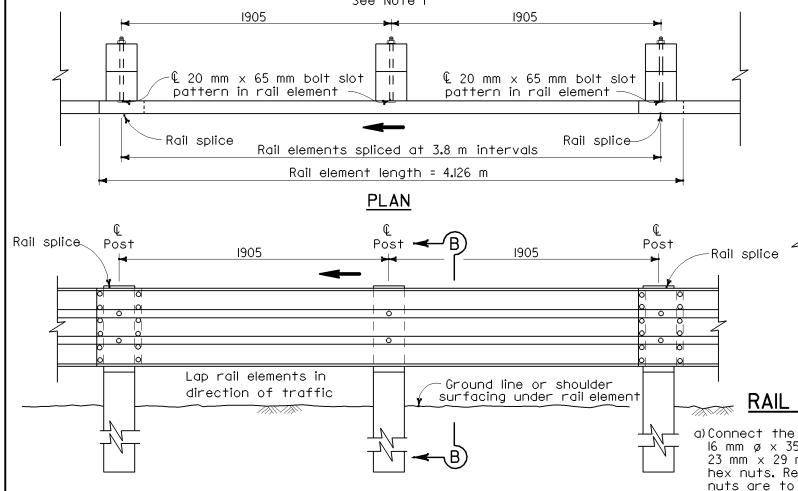

ELEVATION

SINGLE THRIE BEAM BARRIER

(Wood post and blocks)
See Note 1

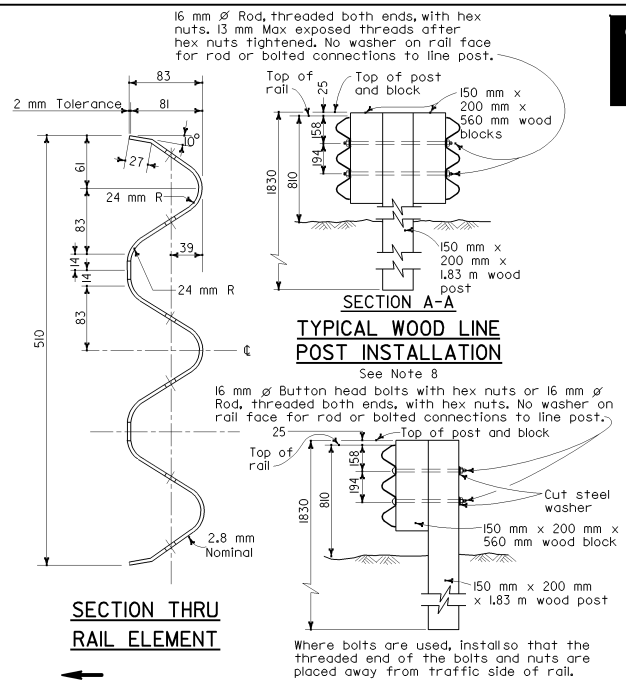

SECTION A-A

TYPICAL WOOD LINE POST INSTALLATION

See Note 8

SECTION THRU RAIL ELEMENT

Where bolts are used, install so that the threaded end of the bolts and nuts are placed away from traffic side of rail.

SECTION B-B

TYPICAL WOOD LINE POST INSTALLATION

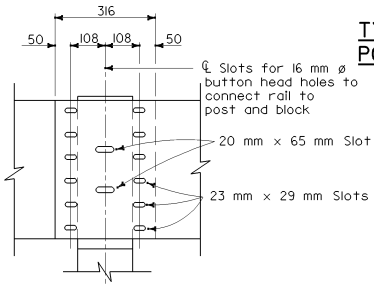

ELEVATION

RAIL ELEMENT SPLICE DETAIL

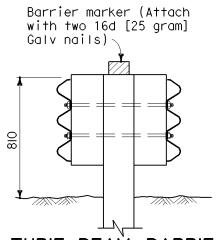

THRIE BEAM BARRIER DELINEATION

See Note 10

a) Connect the overlapped ends of the thrie beam rail elements with 16 mm ø x 35 mm button head oval shoulder bolts inserted into the 23 mm x 29 mm slots and bolted together with 16 mm ø x 35 mm recessed hex nuts. Recess of hex nut points toward rail element. A total of 12 bolts and nuts are to be used at each rail splice connection.

b) The ends of the rail elements are to be overlapped in the direction of traffic (see details).

c) Where end cap is to be attached to the end of a rail element, a total of 4 of the above described splice bolts and nuts are to be used. Where a return cap is to be attached to the ends of rail elements, a total of 8 of the above described splice bolts and nuts are to be used.

Caltrans Metric

DIST	COUNTY	ROUTE	KILOMETER POST TOTAL PROJECT	SHEET NO.	TOTAL SHEETS

REGISTERED CIVIL ENGINEER

July 1, 2004
PLANS APPROVAL DATE

REGISTERED PROFESSIONAL ENGINEER Ellis K. Hirst No. C17926 Exp. 6-30-05 CIVIL STATE OF CALIFORNIA

The State of California or its officers or agents shall not be responsible for the accuracy or completeness of electronic copies of this plan sheet.

To get to the Caltrans web site, go to: http://www.dot.ca.gov

NOTES

1. For details of steel post thrie beam barrier, see Standard Plan 78B.
2. For details of standard hardware, posts and blocks used to construct thrie beam barrier, see Standard Plans A78C1 and A78C2.
3. Thrie beam barrier post spacing to be 1905 mm center to center, except as otherwise noted.
4. Top of barrier rail to be 810 mm above ground line or shoulder surfacing under the rail element.
5. For barrier end treatments and barrier connections, see Standard Plans A78E1, A78E2, A78E3, A78F, A78G and A78H.
6. For connection to Concrete Barrier (Type 60), see Standard Plans A78I.
7. For details of thrie beam barrier on bridge see Standard Plan A78D2. For details of thrie beam barrier at fixed object, see Standard Plan A78D1.
8. Where offset roadway grades are encountered and height of rail element for each roadway cannot be obtained as shown in Section A-A, use saw tooth installation as shown on Standard Plan A78B.
9. Direction of traffic indicated by ⟶.
10. Median barrier delineation to be used when required by the Special Provisions. Spacing of barrier markers to match spacing of raised pavement markers on adjacent median edgeline pavement delineation.

STATE OF CALIFORNIA
DEPARTMENT OF TRANSPORTATION

THRIE BEAM BARRIER STANDARD BARRIER RAILING SECTION (WOOD POST WITH WOOD BLOCK)

NO SCALE

ALL DIMENSIONS ARE IN MILLIMETERS UNLESS OTHERWISE SHOWN

A78A

2004 Std PLAN A78A

04-30-04

Back to Table of Contents

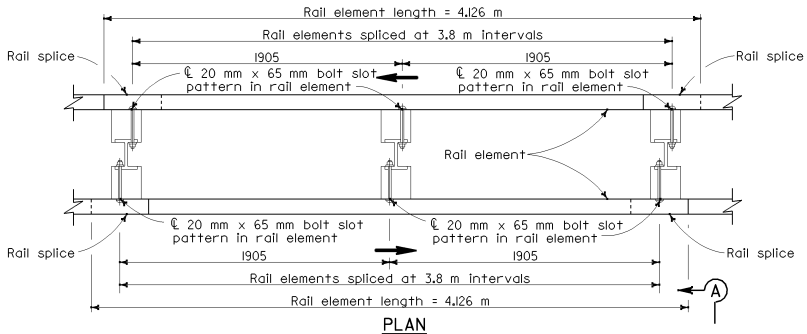

PLAN

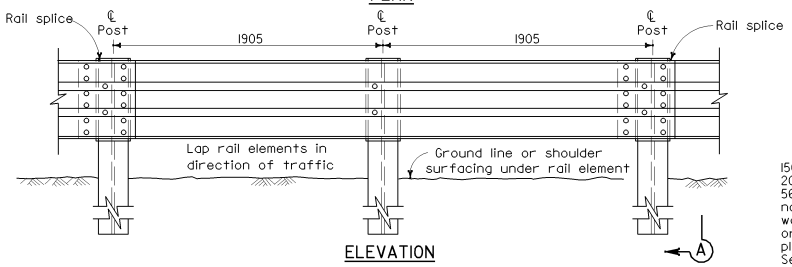

ELEVATION

DOUBLE THRIE BEAM BARRIER

(Steel post with notched wood or notched plastic blocks)
See Note 1

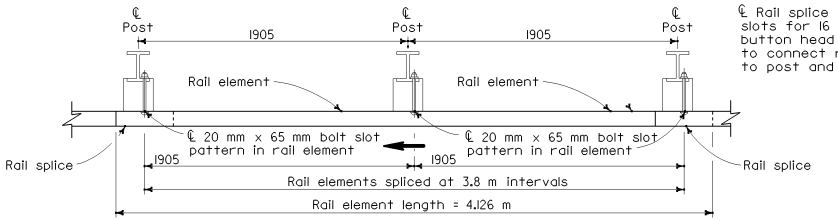

PLAN

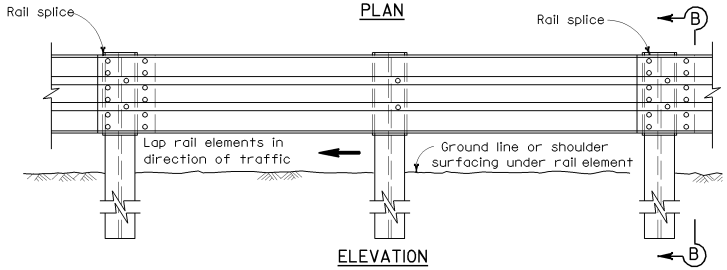

ELEVATION

SINGLE THRIE BEAM BARRIER

(Steel post with notched wood or notched plastic blocks)
See Note 1

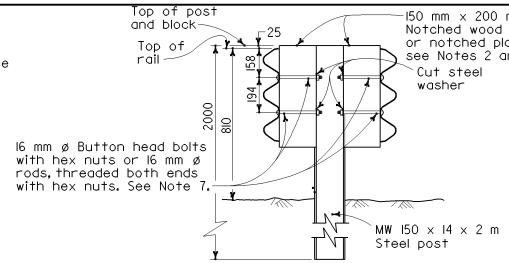

SECTION A-A

TYPICAL STEEL LINE POST INSTALLATION

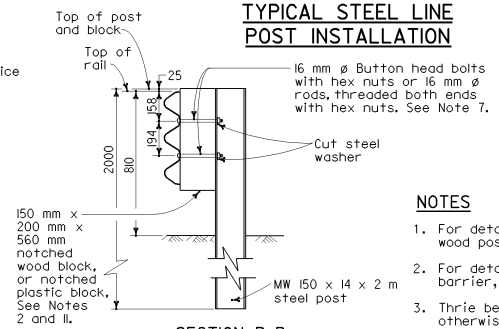

SECTION B-B

TYPICAL STEEL LINE POST INSTALLATION

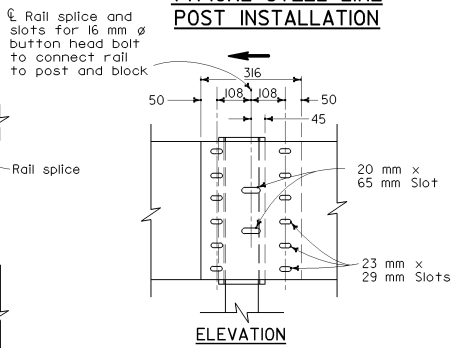

ELEVATION

RAIL ELEMENT SPLICE DETAIL

a) Connect the overlapped ends of the thrie beam rail elements with 16 mm ø x 35 mm button head oval shoulder bolts inserted into the 23 mm x 29 mm slots and bolted together with 16 mm ø x 35 mm recessed hex nuts. Recess of hex nut points toward rail element. A total of 12 bolts and nuts are to be used at each rail splice connection.

b) The ends of the rail elements are to be overlapped in the direction of traffic (see details).

c) Where end cap is to be attached to the end of a rail element, a total of 4 of the above described splice bolts and nuts are to be used. Where a return cap is to be attached to the ends of rail elements, a total of 8 of the above described splice bolts and nuts are to be used.

Caltrans Metric

DIST	COUNTY	ROUTE	KILOMETER POST TOTAL PROJECT	SHEET NO.	TOTAL SHEETS

REGISTERED CIVIL ENGINEER

July 1, 2004
PLANS APPROVAL DATE

REGISTERED PROFESSIONAL ENGINEER Ellis K. Hirst No. C17926 Exp. 6-30-05 CIVIL STATE OF CALIFORNIA

The State of California or its officers or agents shall not be responsible for the accuracy or completeness of electronic copies of this plan sheet.

To get to the Caltrans web site, go to: http://www.dot.ca.gov

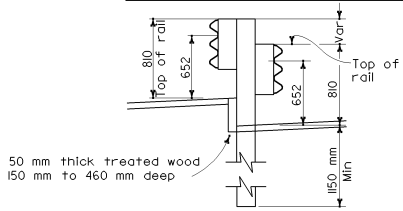

DOUBLE THRIE BEAM BARRIER SAW TOOTH INSTALLATION

(Steel post and wood or plastic blocks only)
See Note 9

NOTES

1. For details of the cross section of the thrie beam rail element and details for wood post with wood block installations, see Standard Plan A78A.
2. For details of standard hardware, posts and blocks used to construct thrie beam barrier, see Standard Plan A78C1 and A78C2.
3. Thrie beam barrier post spacing to be 1905 mm center to center, except as otherwise noted.
4. Top of barrier rail to be 810 mm above ground line or shoulder surfacing under the rail element.
5. For barrier end treatments and barrier connections, see Standard Plans A78E1, A78E2, A78E3, A78F, A78G and A78H.
6. For connection to Concrete Barrier, see Standard Plans A78I.
7. Attach rail element to block and steel post with 2 bolts or rods on approaching traffic side of block and post web. No washer on rail face for rod or bolted connections to line post.
8. For details of thrie beam barrier on bridges, see Standard Plan A78D2. For details of thrie beam barrier at fixed objects, see Standard Plan A78D1.
9. Saw tooth installation to be used where offset roadway grades are encountered and height of rail element for each roadway cannot be obtained as shown in Section A-A.
10. Direction of traffic indicated by → .
11. Notched face of block faces steel post.

STATE OF CALIFORNIA
DEPARTMENT OF TRANSPORTATION

THRIE BEAM BARRIER STANDARD BARRIER RAILING SECTION (STEEL POST WITH NOTCHED WOOD BLOCK OR NOTCHED PLASTIC BLOCK)

NO SCALE

ALL DIMENSIONS ARE IN MILLIMETERS UNLESS OTHERWISE SHOWN

A78B

04-30-04

2004 Std PLAN A78B

Back to Table of Contents

DIST	COUNTY	ROUTE	KILOMETER POST TOTAL PROJECT	SHEET NO.	TOTAL SHEETS

Caltrans Metric

REGISTERED CIVIL ENGINEER

July 1, 2004
PLANS APPROVAL DATE

REGISTERED PROFESSIONAL ENGINEER Ellis K. Hirst No. C17926 Exp. 6-30-05 CIVIL STATE OF CALIFORNIA

The State of California or its officers or agents shall not be responsible for the accuracy or completeness of electronic copies of this plan sheet.

To get to the Caltrans web site, go to: http://www.dot.ca.gov

NOTE

1. Flat plate washer detail has been deleted.

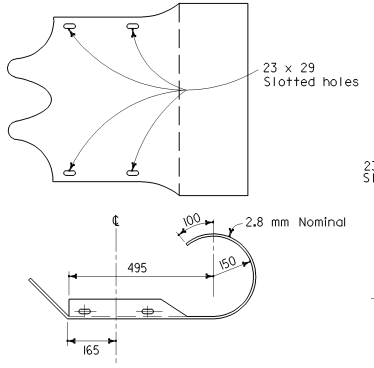

END CAP
(TYPE TA)

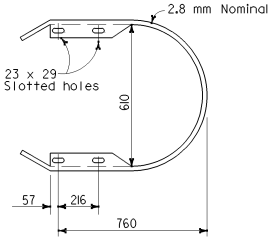

RETURN CAP
(TYPE TA)

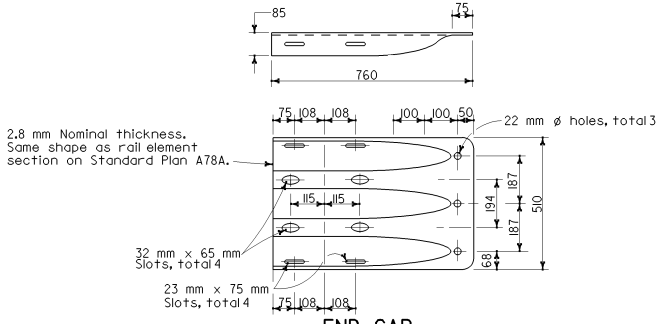

END CAP
(TYPE TC)

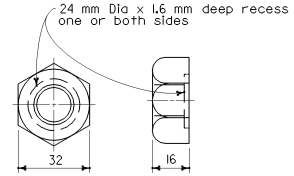

16 mm ø RECESS NUT

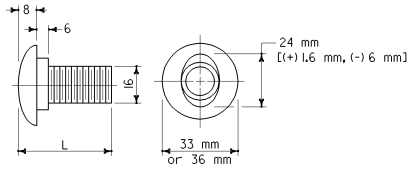

16 mm ø BUTTON HEAD BOLT

L	THREAD LENGTH
35 mm	full thread length
50 mm	full thread length
255 mm	100 mm Min thread length
460 mm	100 mm Min thread length

STATE OF CALIFORNIA
DEPARTMENT OF TRANSPORTATION

THRIE BEAM BARRIER STANDARD HARDWARE DETAILS

NO SCALE

ALL DIMENSIONS ARE IN
MILLIMETERS UNLESS OTHERWISE SHOWN

A78C1

2004 Std PLAN A78C1

05-10-04

Back to Table of Contents

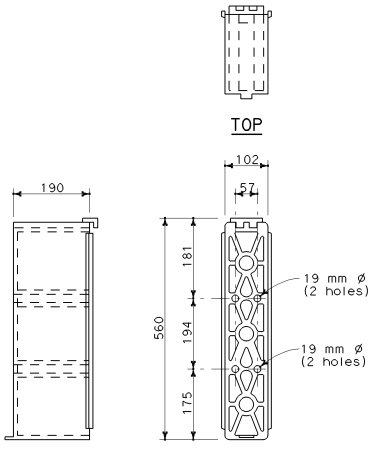

SIDE FRONT
NOTCHED PLASTIC BLOCK

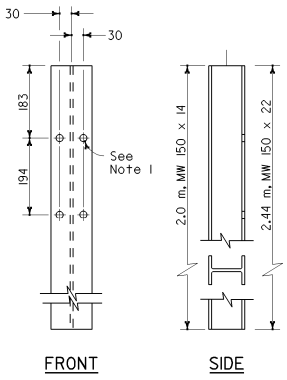

FRONT SIDE
STEEL POST
MW 150 x 14 and
MW 150 x 22

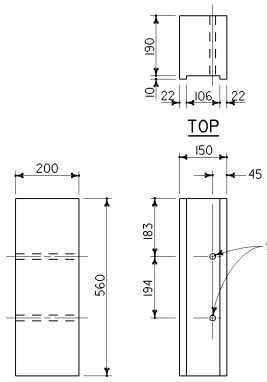

SIDE FRONT
150 mm x 200 mm
NOTCHED WOOD BLOCK
See Notes 3 and 5

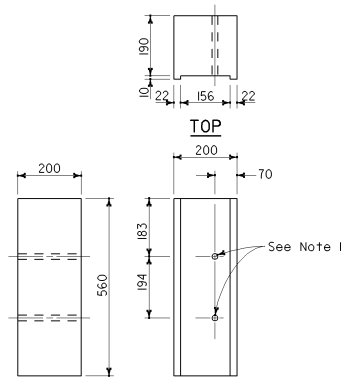

SIDE FRONT
200 mm x 200 mm
NOTCHED WOOD BLOCK
See Notes 4 and 5

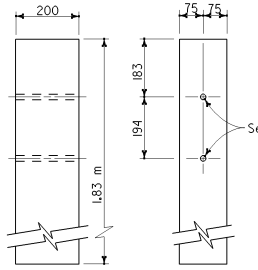

SIDE FRONT
150 mm x 200 mm
WOOD POST

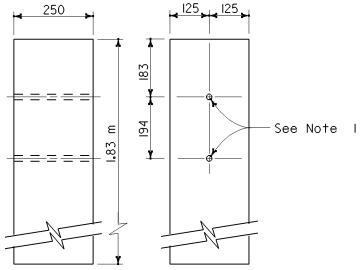

SIDE FRONT
250 mm x 250 mm
WOOD POST

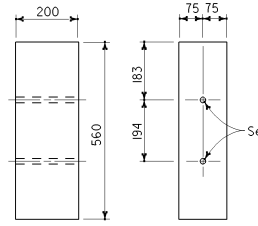

SIDE FRONT
150 mm x 200 mm
WOOD BLOCK

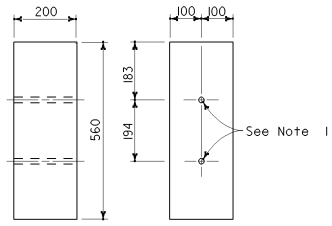

SIDE FRONT
200 mm x 200 mm
WOOD BLOCK

Caltrans Metric

DIST	COUNTY	ROUTE	KILOMETER POST TOTAL PROJECT	SHEET NO.	TOTAL SHEETS

REGISTERED CIVIL ENGINEER

July 1, 2004
PLANS APPROVAL DATE

REGISTERED PROFESSIONAL ENGINEER Ellis K. Hirst No. C17926 Exp. 6-30-05 CIVIL STATE OF CALIFORNIA

The State of California or its officers or agents shall not be responsible for the accuracy or completeness of electronic copies of this plan sheet.

To get to the Caltrans web site, go to: http://www.dot.ca.gov

NOTES

1. All holes in steel post to be 21 mm dia maximum. Holes in wood posts and wood blocks to be 20 mm dia ± 1.6 mm.
2. Dimensions shown for wood post are nominal.
3. For use with MW 150 x 14 steel post.
4. For use with MW 150 x 22 steel post.
5. Notched face of block faces steel post.

STATE OF CALIFORNIA
DEPARTMENT OF TRANSPORTATION

THRIE BEAM BARRIER POST AND BLOCK DETAILS

NO SCALE

ALL DIMENSIONS ARE IN MILLIMETERS UNLESS OTHERWISE SHOWN

A78C2

05-10-04

Back to Table of Contents

DIST	COUNTY	ROUTE	KILOMETER POST TOTAL PROJECT	SHEET NO.	TOTAL SHEETS

Caltrans Metric

REGISTERED CIVIL ENGINEER

July 1, 2004
PLANS APPROVAL DATE

REGISTERED PROFESSIONAL ENGINEER Ellis K. Hirst No. C17926 Exp. 6-30-05 CIVIL STATE OF CALIFORNIA

The State of California or its officers or agents shall not be responsible for the accuracy or completeness of electronic copies of this plan sheet.

To get to the Caltrans web site, go to: http://www.dot.ca.gov

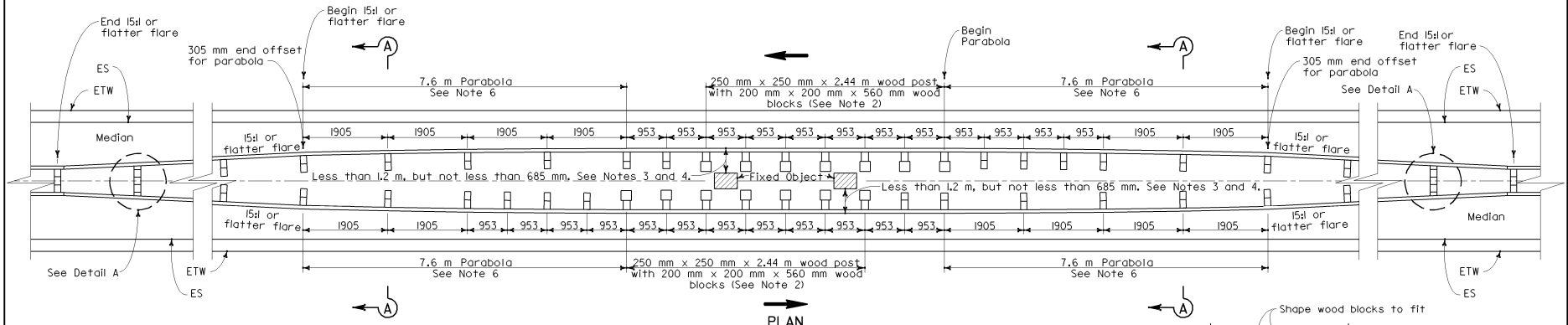

PLAN

THRIE BEAM BARRIER AT FIXED OBJECTS

(Wood post and block shown)
See Notes 1, 2 and 3.

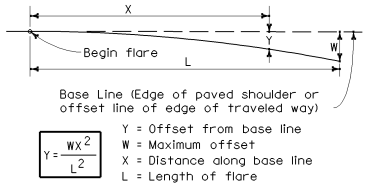

PARABOLIC FLARE OFFSETS

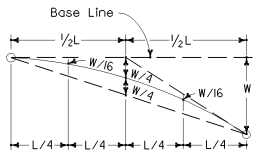

TYPICAL PARABOLIC LAYOUT

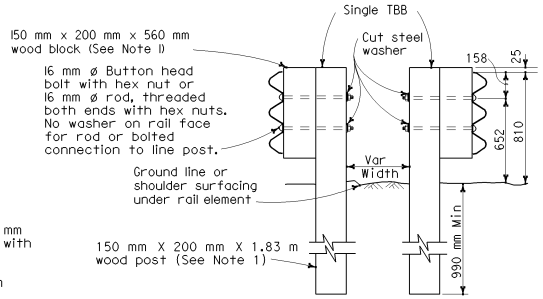

SECTION A-A

Wood post with wood block shown
See Note 1

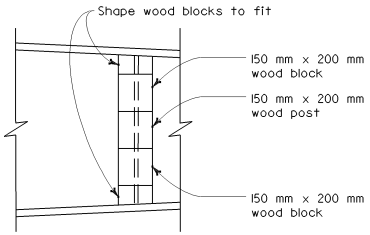

DETAIL A

NOTES

1. Where applicable and when specified, MW 150 x 14 x 2 m steel post with 150 mm x 200 mm x 560 mm notched wood blocks or plastic blocks may be used for 150 mm x 200 mm x 1.83 m wood post with 150 mm x 200 mm x 560 mm wood post.
2. Where applicable and when specified, MW 150 x 22 x 2.44 m steel post with 200 mm x 200 mm x 560 mm notched wood blocks or plastic blocks may be used for the 250 mm x 250 mm x 2.44 m wood post with 200 mm x 200 mm x 560 mm wood blocks shown at 953 mm center to center spacing.
3. Where a minimum clearance of 1.2 m or more can be obtained between the face of the thrie beam rail and the face of the fixed object(s), the following substitutions may be made:
   a) 150 mm x 200 mm x 1.83 m wood posts with 150 mm x 200 mm x 560 mm wood blocks for the 250 mm x 250 mm x 2.44 m wood post with 200 mm x 200 mm x 560 mm wood blocks shown.
   b) 1905 mm post spacing for the 953 mm spacing shown.
4. Where the clearance between the face of the railing and the face of a fixed object is less than 685 mm, a concrete barrier should be constructed to shield the fixed object(s).
5. Direction of traffic indicated by ➡ .
6. For typical flare offsets for 7.6 m length parabola with maximum offset of 305 mm, see Standard Plan A77E1.

STATE OF CALIFORNIA
DEPARTMENT OF TRANSPORTATION

THRIE BEAM BARRIER AT FIXED OBJECTS IN MEDIAN

NO SCALE

ALL DIMENSIONS ARE IN MILLIMETERS UNLESS OTHERWISE SHOWN

A78D1

2004 Std PLAN A78D1

08-09-04

Back to Table of Contents

DIST	COUNTY	ROUTE	KILOMETER POST TOTAL PROJECT	SHEET NO.	TOTAL SHEETS

Caltrans Metric

REGISTERED CIVIL ENGINEER

July 1, 2004
PLANS APPROVAL DATE

REGISTERED PROFESSIONAL ENGINEER
Ellis K. Hirst
No. C17926
Exp. 6-30-05
CIVIL
STATE OF CALIFORNIA

The State of California or its officers or agents shall not be responsible for the accuracy or completeness of electronic copies of this plan sheet.

To get to the Caltrans web site, go to: http://www.dot.ca.gov

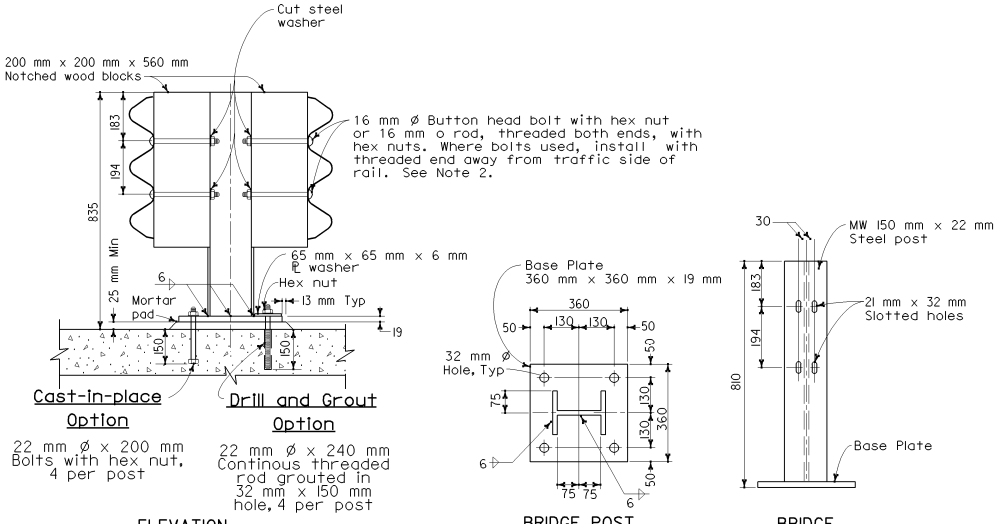

DOUBLE THRIE BEAM BARRIER ON BRIDGE

NOTES

1. See Standard Plan A78B for steel post with notched wood block construction details.
2. Attach rail element to wood block and steel post with 2 bolts or rods on approaching traffic side of block and post web. No washer on rail faces for rods or bolted connections to post.

STATE OF CALIFORNIA
DEPARTMENT OF TRANSPORTATION

DOUBLE THRIE BEAM BARRIER ON BRIDGE

NO SCALE

ALL DIMENSIONS ARE IN MILLIMETERS UNLESS OTHERWISE SHOWN

A78D2

2004 Std PLAN A78D2

04-30-04

Back to Table of Contents

DIST	COUNTY	ROUTE	KILOMETER POST TOTAL PROJECT	SHEET NO.	TOTAL SHEETS

Caltrans Metric

REGISTERED CIVIL ENGINEER

July 1, 2004
PLANS APPROVAL DATE

REGISTERED PROFESSIONAL ENGINEER Ellis K. Hirst No. C17926 Exp. 6-30-05 CIVIL STATE OF CALIFORNIA

The State of California or its officers or agents shall not be responsible for the accuracy or completeness of electronic copies of this plan sheet.

To get to the Caltrans web site, go to: http://www.dot.ca.gov

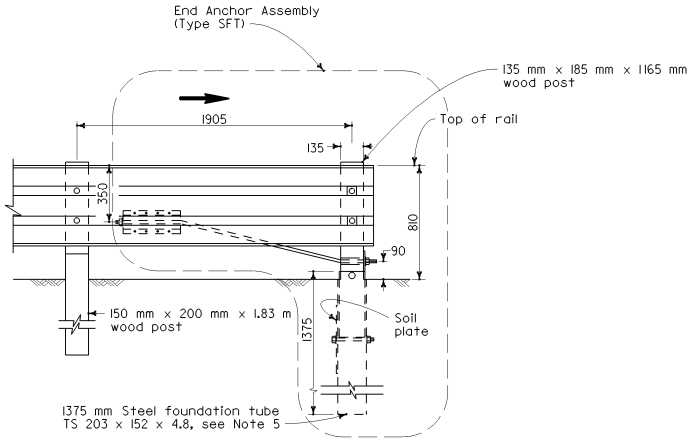

END ANCHOR FOR TRAFFIC DEPARTURE END OF SINGLE THRIE BEAM BARRIER

(For one-way roadways)
See Note 1

NOTES

1. For additional details of End Anchor Assembly (Type SFT), see Standard Plan A77H1.
2. The "W" beam to thrie beam section is only required where the terminal system connection to the thrie beam barrier is a "W" beam rail.
3. In-line Terminal System End Treatments are used where site conditions will not accommodate a flared end treatment. The type of terminal system to be used will be shown on the Project Plans.
4. A Caltrans approved crash cushion should be used in place of a terminal system end treatment where the backside of the railing would be exposed to traffic.
5. A 1830 mm length steel foundation tube, TS 203 x 152 x x 4.8, without a soil plate, may be furnished and installed in place of the 1375 mm length steel foundation tube and soil plate shown. Minimum embedment of the 1830 mm length tube shall be 1760 mm. A 16 mm ø hex head bolt and nut shall be installed in the hole in the 1830 mm length tube to keep the wood post from dropping into the tube.
6. Direction of adjacent traffic indicated by ➡.

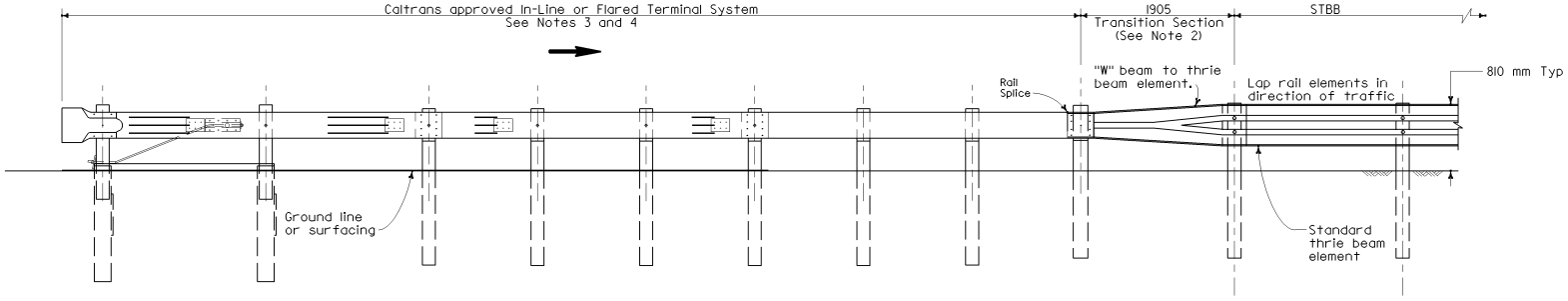

ELEVATION

END TREATMENT FOR TRAFFIC APPROACH END OF SINGLE THRIE BEAM BARRIER

STATE OF CALIFORNIA
DEPARTMENT OF TRANSPORTATION

SINGLE THRIE BEAM BARRIER END ANCHOR ASSEMBLY AND TERMINAL SYSTEM END TREATMENT

NO SCALE

ALL DIMENSIONS ARE IN MILLIMETERS UNLESS OTHERWISE SHOWN

A78E1

05-24-04

Back to Table of Contents

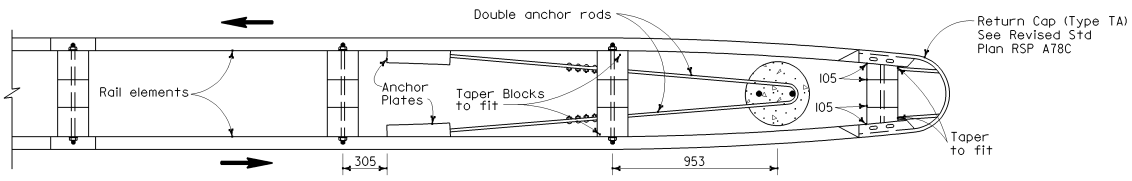

PLAN

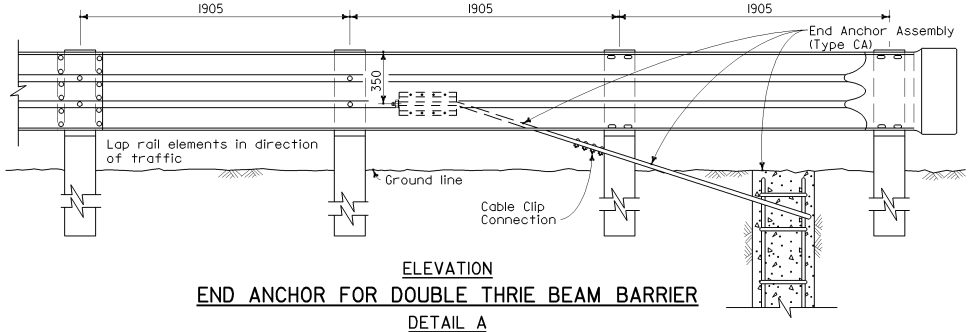

ELEVATION

END ANCHOR FOR DOUBLE THRIE BEAM BARRIER

DETAIL A

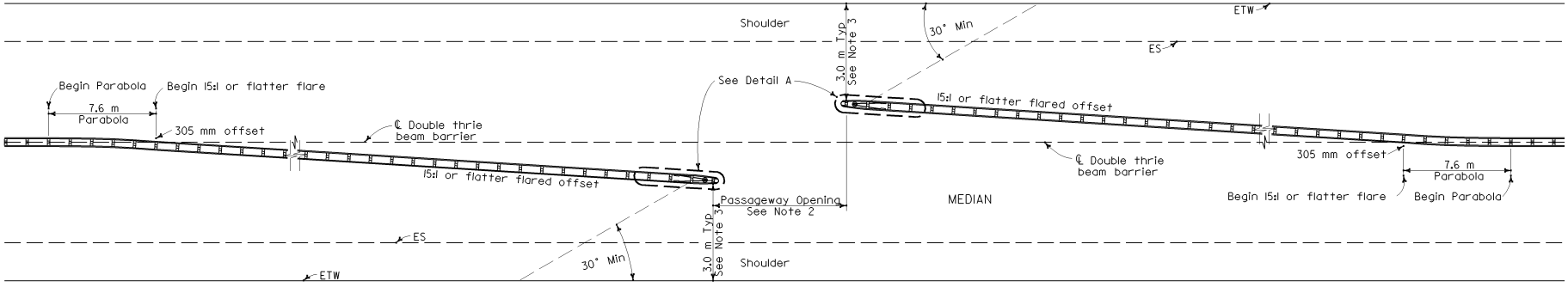

PLAN

EMERGENCY PASSAGEWAY

IN THRIE BEAM BARRIER

Caltrans Metric

DIST	COUNTY	ROUTE	KILOMETER POST TOTAL PROJECT	SHEET NO.	TOTAL SHEETS

REGISTERED CIVIL ENGINEER

July 1, 2004

PLANS APPROVAL DATE

REGISTERED PROFESSIONAL ENGINEER Ellis K. Hirst No. C17926 Exp. 6-30-05 CIVIL STATE OF CALIFORNIA

The State of California or its officers or agents shall not be responsible for the accuracy or completeness of electronic copies of this plan sheet.

To get to the Caltrans web site, go to: http://www.dot.ca.gov

NOTES

1. For End Anchor Assembly (Type CA) details, see Standard Plan A77I1.
2. The typical passageway opening for motorcycles is 1.8 m to 2.4 m. Generally, motorcycle passageways are not used where median width is less than 6.7 m. The typical passageway opening for motor vehicles is 3.7 m to 4.9 m. Generally, motor vehicle passageways are not used where median width is 9.8 m or less. See Project Plans for width of passageway opening.
3. Barrier end offsets from edge of traveled way vary depending on type of highway facility involved. End offsets other than 3.0 m will be shown on the Project Plans.
4. Direction of traffic indicated by ⟶.

STATE OF CALIFORNIA
DEPARTMENT OF TRANSPORTATION

DOUBLE THRIE BEAM BARRIER EMERGENCY PASSAGEWAY AND END ANCHOR ASSEMBLY DETAILS

NO SCALE

ALL DIMENSIONS ARE IN MILLIMETERS UNLESS OTHERWISE SHOWN

A78E2

04-30-04

Back to Table of Contents

DIST	COUNTY	ROUTE	KILOMETER POST TOTAL PROJECT	SHEET NO.	TOTAL SHEETS

Caltrans Metric

REGISTERED CIVIL ENGINEER

July 1, 2004
PLANS APPROVAL DATE

REGISTERED PROFESSIONAL ENGINEER
Ellis K. Hirst
No. C17926
Exp. 6-30-05
CIVIL
STATE OF CALIFORNIA

The State of California or its officers or agents shall not be responsible for the accuracy or completeness of electronic copies of this plan sheet.

To get to the Caltrans web site, go to: http://www.dot.ca.gov

NOTES

1. Crash Cushion (Type CAT) shown. For the type of Crash Cushion to be used, see Project Plans and Special Provisions.
2. For details of standard double thrie beam barrier, see Standard Plans A78A, A78B, A78C1, and A78C2.
3. The 'W' beam to thrie beam sections are only required where the crash cushion connection to the thrie beam barrier assembly is a 'W' beam rail.
4. Direction of adjacent traffic is indicated by ⟶ .

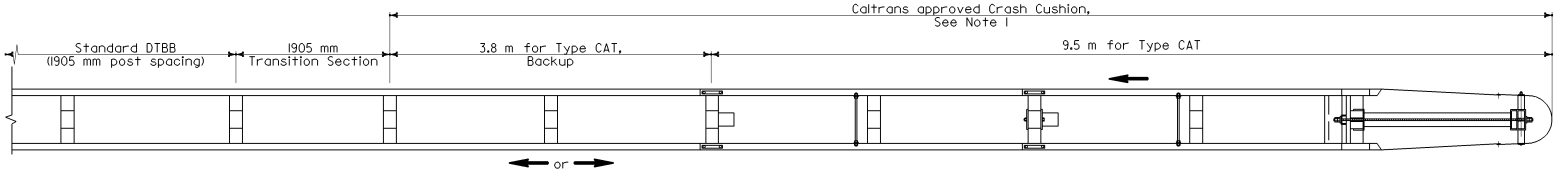

PLAN

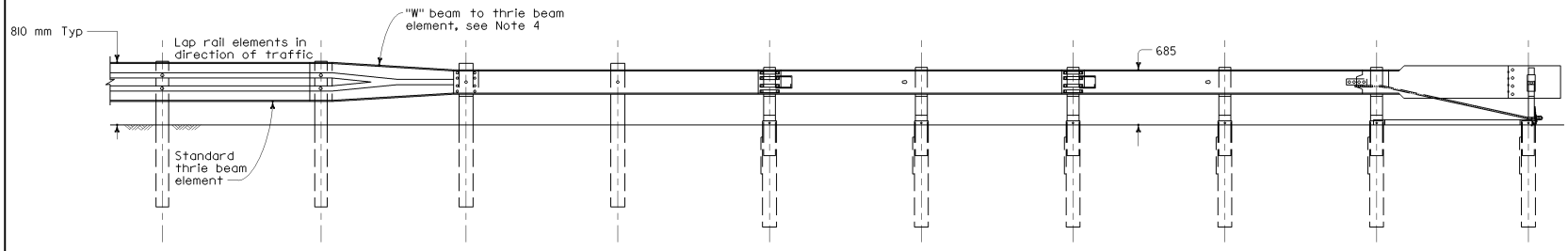

ELEVATION

END TREATMENT FOR DOUBLE THRIE BEAM BARRIER

STATE OF CALIFORNIA
DEPARTMENT OF TRANSPORTATION

DOUBLE THRIE BEAM BARRIER CRASH CUSHION END TREATMENT

NO SCALE

ALL DIMENSIONS ARE IN
MILLIMETERS UNLESS OTHERWISE SHOWN

A78E3

2004 Std PLAN A78E3

04-30-04

Back to Table of Contents

DIST	COUNTY	ROUTE	KILOMETER POST TOTAL PROJECT	SHEET NO.	TOTAL SHEETS

Caltrans Metric

REGISTERED CIVIL ENGINEER

July 1, 2004
PLANS APPROVAL DATE

REGISTERED PROFESSIONAL ENGINEER Ellis K. Hirst No. C17926 Exp. 6-30-05 CIVIL STATE OF CALIFORNIA

The State of California or its officers or agents shall not be responsible for the accuracy or completeness of electronic copies of this plan sheet.

To get to the Caltrans web site, go to: http://www.dot.ca.gov

NOTES

1. For additional details of Transition Railing (Type DTB), see Standard Plans A78K. Transition Railing (Type DTB) transitions the standard 12 gage double thrie beam barrier to a heavier gage double thrie beam railing section then to a heavier gage nested double thrie beam barrier section which then is connected to the concrete bridge railing.
2. For typical use of Connection Detail 1A, see RAILING CASE 9 in Diagram No. 9 on Standard Plan A77D2 and Type 25A Connection Layout on Standard Plan A78H.
3. Where the height of the bridge railing exceeds the height of the thrie beam railing by more than 25 mm at Connection Detail 1A, taper the top of the end of the bridge railing at 1:4 to match the top elevation of the thrie beam railing.
4. Direction of adjacent traffic indicated by ⟶ .

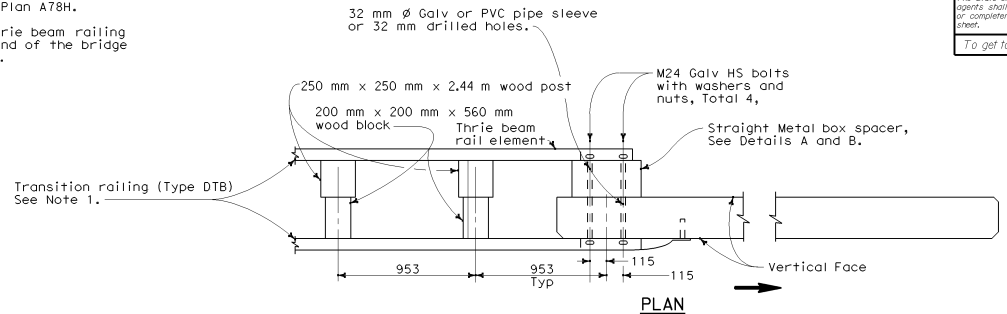

PLAN

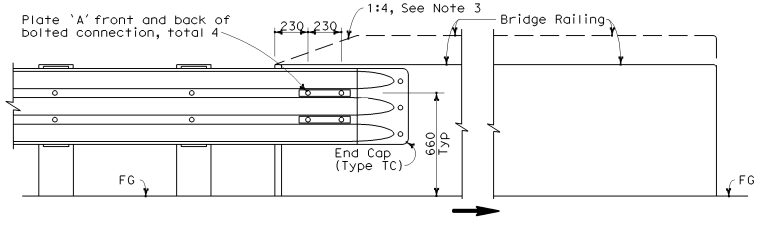

ELEVATION

CONNECTION DETAIL IA

See Note 2

DOUBLE THRIE BEAM BARRIER CONNECTION TO BRIDGE RAILING WITHOUT SIDEWALK

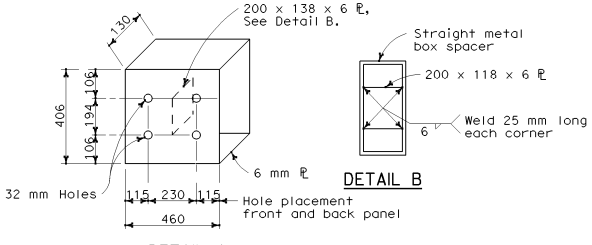

DETAIL B

DETAIL A

STRAIGHT METAL BOX SPACER

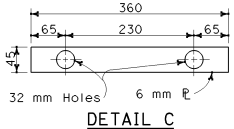

DETAIL C

PLATE 'A'

STATE OF CALIFORNIA
DEPARTMENT OF TRANSPORTATION

DOUBLE THRIE BEAM BARRIER CONNECTION TO BRIDGE RAILINGS WITHOUT SIDEWALKS

NO SCALE

ALL DIMENSIONS ARE IN MILLIMETERS UNLESS OTHERWISE SHOWN

A78F1

05-24-04

2004 Std PLAN A78F1

Back to Table of Contents

NOTES

1. For additional details of Transition Railing (Type STB), see Standard Plans A78J. Transition Railing (Type STB) transitions the standard 12 gage single thrie beam barrier to a heavier gage single thrie beam railing section then to a heavier gage nested double thrie beam barrier section which then is connected to the concrete bridge railing.
2. For typical use of Connection Details 2A , see RAILING CASE 10 in Diagram No. 10 on Standard Plan A77D2.
3. For typical use of connection Detail 3A, See RAILING CASE 11 in Diagram No. 10 on Standard Plan A77D2.
4. Where the height of the bridge railing exceeds the height of the thrie beam railing by more than 25 mm at Connection Detail 2A, taper the top of the end of the bridge railing at 1:4 to match the top elevation of the thrie beam railing.
5. Direction of adjacent traffic indicated by ⟶ .

Caltrans Metric

DIST	COUNTY	ROUTE	KILOMETER POST TOTAL PROJECT	SHEET NO.	TOTAL SHEETS

REGISTERED CIVIL ENGINEER

July 1, 2004
PLANS APPROVAL DATE

REGISTERED PROFESSIONAL ENGINEER Ellis K. Hirst No. C17926 Exp. 6-30-05 CIVIL STATE OF CALIFORNIA

The State of California or its officers or agents shall not be responsible for the accuracy or completeness of electronic copies of this plan sheet.

To get to the Caltrans web site, go to: http://www.dot.ca.gov

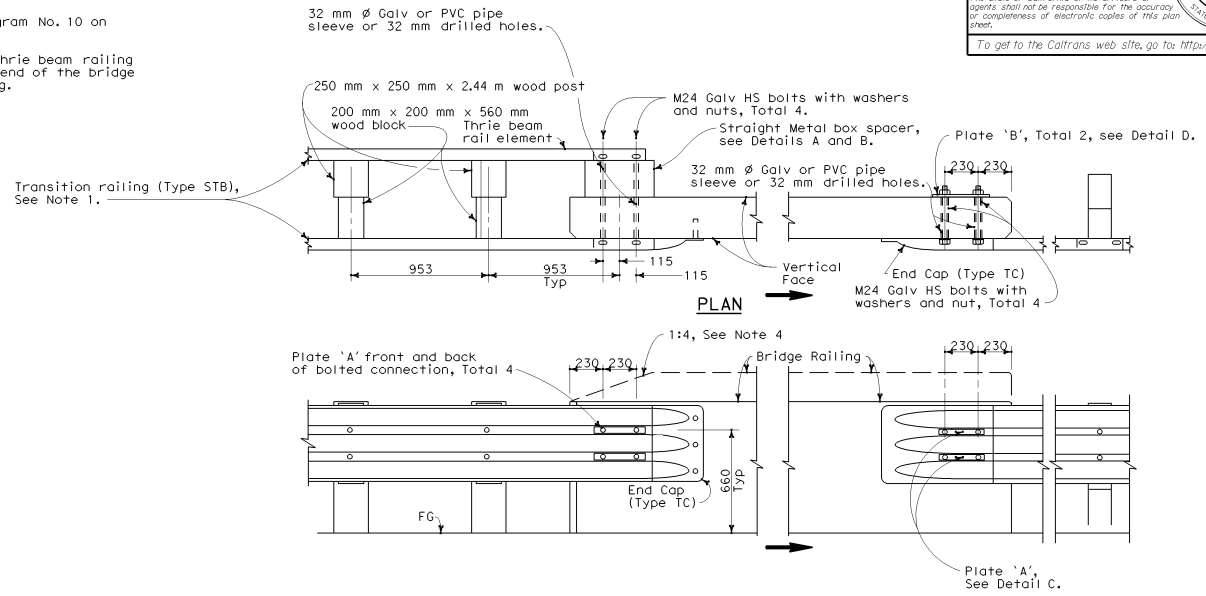

SINGLE THRIE BEAM BARRIER CONNECTION TO BRIDGE RAILING WITHOUT SIDEWALK

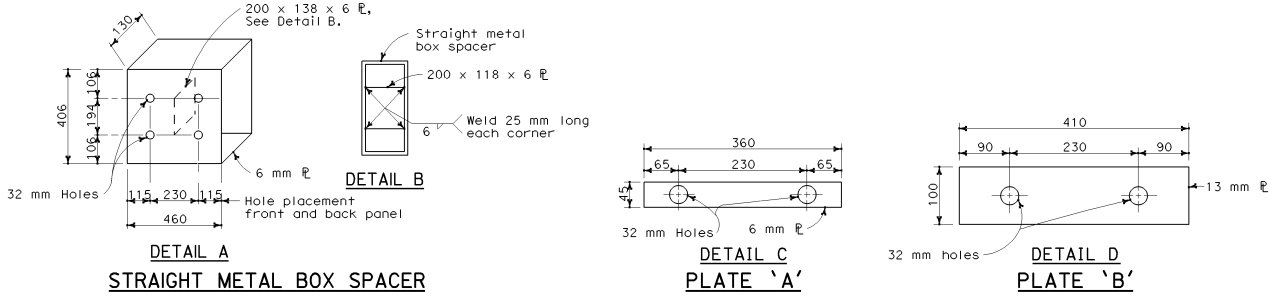

DETAIL A
STRAIGHT METAL BOX SPACER

DETAIL C
PLATE 'A'

DETAIL D
PLATE 'B'

STATE OF CALIFORNIA
DEPARTMENT OF TRANSPORTATION

SINGLE THRIE BEAM BARRIER CONNECTIONS TO BRIDGE RAILINGS WITHOUT SIDEWALKS

NO SCALE

ALL DIMENSIONS ARE IN MILLIMETERS UNLESS OTHERWISE SHOWN

A78F2

2004 Std PLAN A78F2

05-24-04

Back to Table of Contents

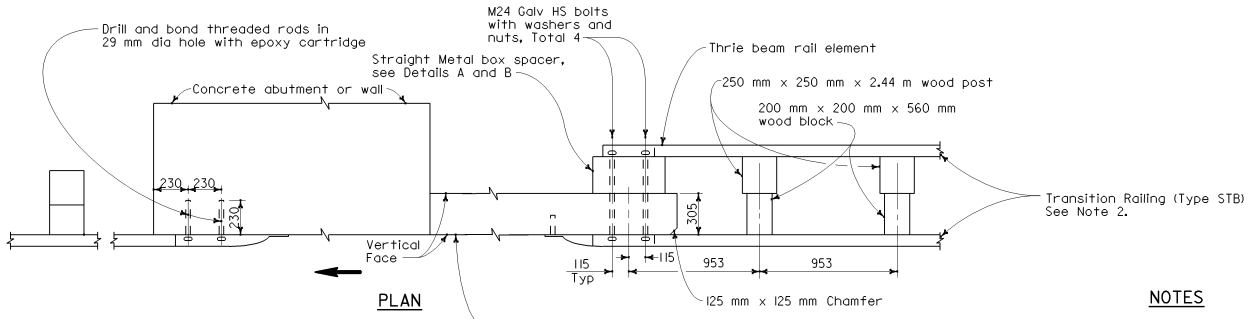

PLAN

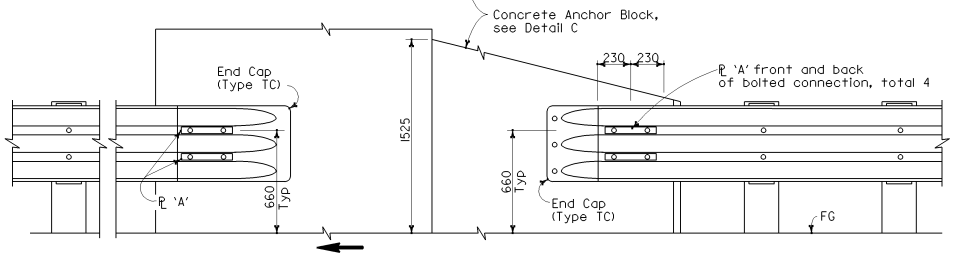

CONNECTION DETAIL 3A

CONNECTION DETAIL 4A

See Note 2

ELEVATION

THRIE BEAM BARRIER CONNECTION TO ABUTMENT OR WALL

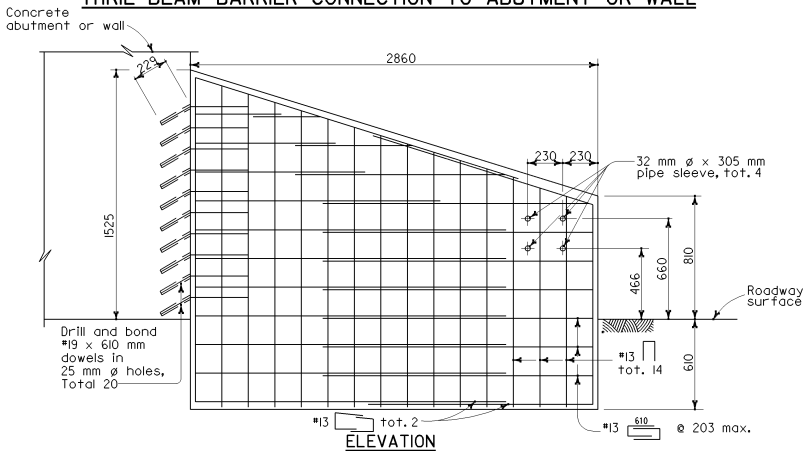

ELEVATION

ANCHOR BLOCK FOR TRANSITION RAILING CONNECTION

DETAIL C

NOTES

1. These connection details apply to concrete abutments and walls. For additional connections details, see Project Plans.
2. For additional details of Transition Railing (Type STB), see Standard Plan A78J. Transition Railing (Type STB) transitions the standard 12 gage single thrie beam barrier to a heavier gage single thrie beam railing section then to a heavier gage nested double thrie beam barrier section which then is connected to the concrete anchor block.
3. Direction of adjacent traffic indicated by ⟶ .

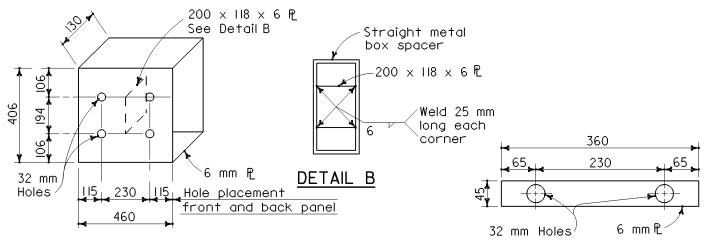

DETAIL A

DETAIL B

PLATE 'A'

STRAIGHT METAL BOX SPACER

STATE OF CALIFORNIA
DEPARTMENT OF TRANSPORTATION

THRIE BEAM BARRIER CONNECTIONS TO ABUTMENTS AND WALLS

NO SCALE

ALL DIMENSIONS ARE IN MILLIMETERS UNLESS OTHERWISE SHOWN

A78G

DIST	COUNTY	ROUTE	KILOMETER POST TOTAL PROJECT	SHEET NO.	TOTAL SHEETS

REGISTERED CIVIL ENGINEER

July 1, 2004
PLANS APPROVAL DATE

REGISTERED PROFESSIONAL ENGINEER Ellis K. Hirst No. C17926 Exp. 6-30-05 CIVIL STATE OF CALIFORNIA

The State of California or its officers or agents shall not be responsible for the accuracy or completeness of electronic copies of this plan sheet.

To get to the Caltrans web site, go to: http://www.dot.ca.gov

05-24-04

Back to Table of Contents

NOTES

1. Line post, blocks and hardware to be used are shown on Standard Plans A78A, A78B, A78C1, and A78C2.
2. Post spacing to be 1905 mm center to center, except as otherwise noted.
3. Except as noted, line posts are 150 mm x 200 mm x 1.83 m wood with 150 mm x 200 mm x 560 mm wood blocks. MW 150 x 14 steel posts, 2.0 m in length, with 150 mm x 200 mm x 560 mm notched wood blocks or plastic blocks may be used for 150 mm x 200 mm x 1.83 m wood posts with 150 mm x 200 mm x 560 mm wood blocks where applicable and when specified.
4. Direction of adjacent traffic indicated by ⟶ .
5. For Transition Railing (Type DTB) details, see Standard Plan A78K.

Caltrans Metric

DIST	COUNTY	ROUTE	KILOMETER POST TOTAL PROJECT	SHEET NO.	TOTAL SHEETS

REGISTERED CIVIL ENGINEER

July 1, 2004
PLANS APPROVAL DATE

REGISTERED PROFESSIONAL ENGINEER Ellis K. Hirst No. C17926 Exp. 6-30-05 CIVIL STATE OF CALIFORNIA

The State of California or its officers or agents shall not be responsible for the accuracy or completeness of electronic copies of this plan sheet.

To get to the Caltrans web site, go to: http://www.dot.ca.gov

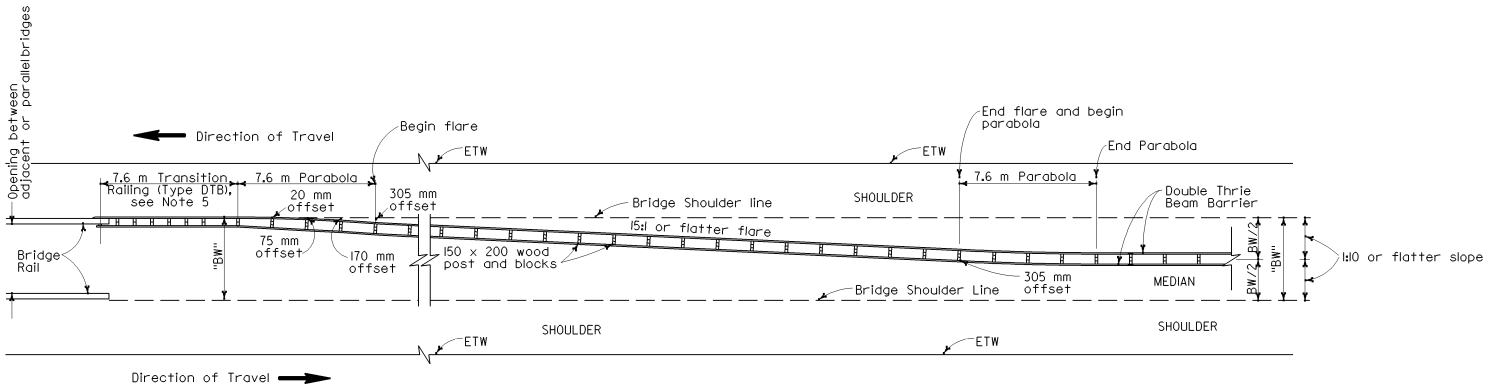

TYPE 25A CONNECTION LAYOUT

STATE OF CALIFORNIA
DEPARTMENT OF TRANSPORTATION

THRIE BEAM BARRIER TYPICAL LAYOUT FOR CONNECTION TO BRIDGE RAILING

NO SCALE

ALL DIMENSIONS ARE IN MILLIMETERS UNLESS OTHERWISE SHOWN

A78H

05-24-04

2004 Std PLAN A78H

Back to Table of Contents

DIST	COUNTY	ROUTE	KILOMETER POST TOTAL PROJECT	SHEET NO.	TOTAL SHEETS

Caltrans Metric

REGISTERED CIVIL ENGINEER

July 1, 2004
PLANS APPROVAL DATE

REGISTERED PROFESSIONAL ENGINEER Ellis K. Hirst No. C17926 Exp. 6-30-05 CIVIL STATE OF CALIFORNIA

The State of California or its officers or agents shall not be responsible for the accuracy or completeness of electronic copies of this plan sheet.

To get to the Caltrans web site, go to: http://www.dot.ca.gov

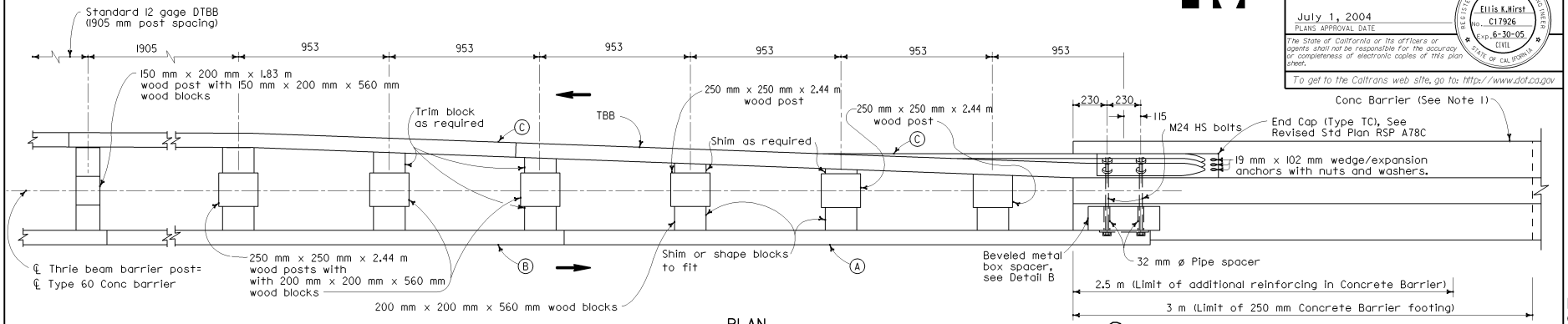

PLAN

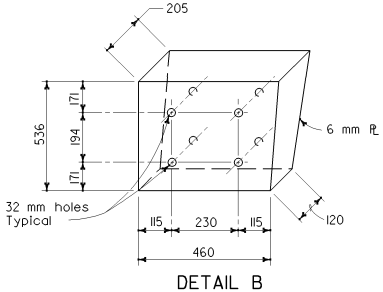

DETAIL B

Beveled metal box spacer
See Note 3

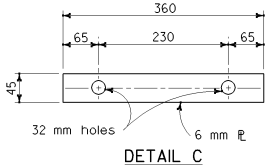

DETAIL C

PLATE 'A'

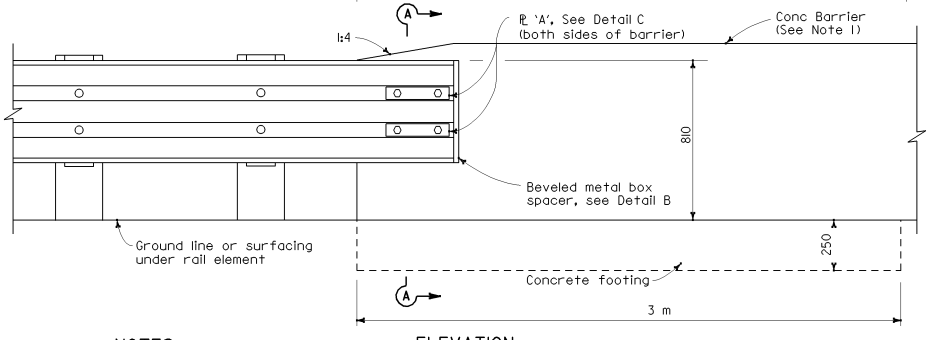

ELEVATION

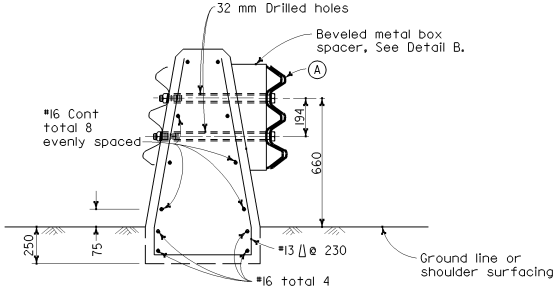

SECTION A-A

(Type 60 Conc Barrier shown)

NOTES

1. For details of Concrete Barrier Type 60, see Standard Plan A76A. Thrie beam barrier connections to Concrete Barrier Type 60S and Type 60G are similar to details shown on this plan.
2. For additional thrie beam barrier details, see Standard Plans A78A, A78B, A78C1, and A78C2.
3. Where beveled metal box spacer is installed, place 32 mm ø x 190 mm and 32 mm ø x 95 mm pipe spacers on M24 HS bolts passing through interior of box.
4. Direction of traffic indicated by ➡ .

LEGEND

(A) Nested thrie beam elements (one 12 gage element nested over one 10 gage element).

(B) One 10 gage thrie beam element.

(C) One 12 gage thrie beam element.

10 gage = 3.43 mm thick

12 gage = 2.67 mm thick

STATE OF CALIFORNIA
DEPARTMENT OF TRANSPORTATION

THRIE BEAM BARRIER CONNECTION TO CONCRETE BARRIER

NO SCALE

ALL DIMENSIONS ARE IN MILLIMETERS UNLESS OTHERWISE SHOWN

A78I

04-30-04

2004 Std PLAN A78I

Back to Table of Contents

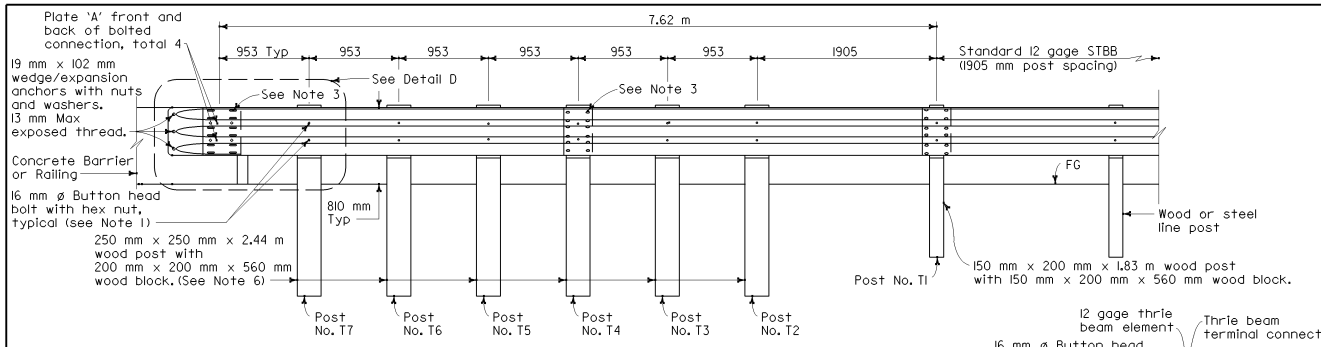

ELEVATION

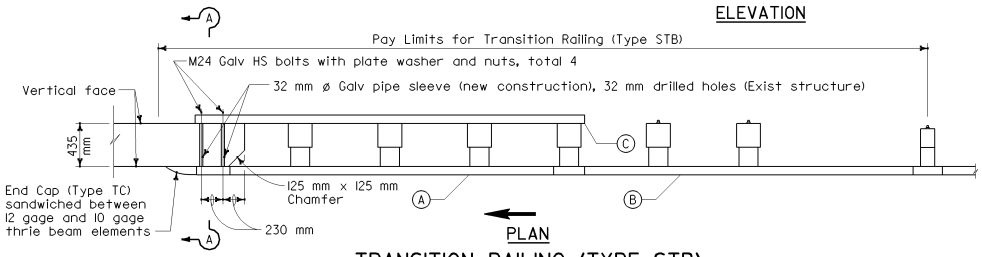

PLAN

TRANSITION RAILING (TYPE STB)

(No Blockout Attachment)

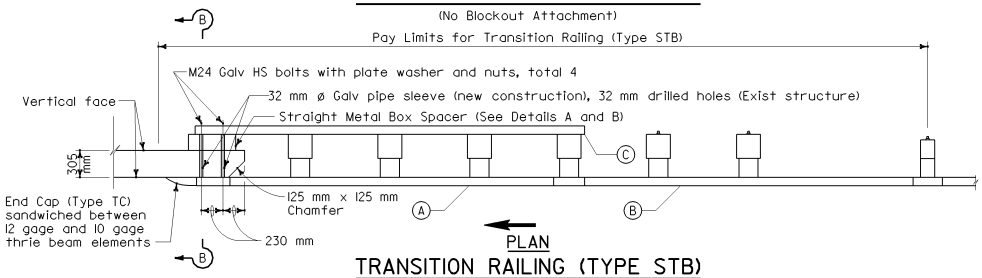

PLAN

TRANSITION RAILING (TYPE STB)

(Blockout Attachment)

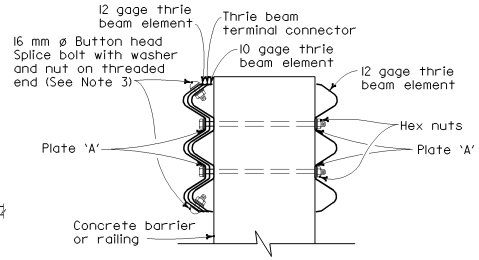

SECTION A-A

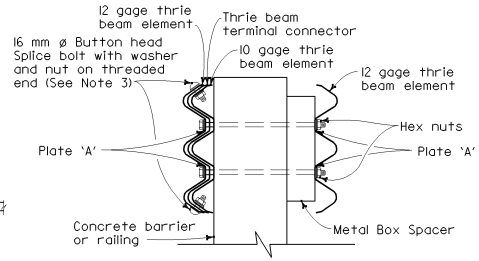

SECTION B-B

NOTES:

1. Use 16 mm ø Button head bolts and hex nuts for connection to posts. No washer on rail face for bolted connections to post.
2. The nested rail elements, end cap and single 10 gage thrie beam element, may be spliced together prior to bolting the elements to the wood post and concrete barrier or railing.
3. Exterior splice bolt holes for rail splices at Post No. T4 and the connection to the concrete barrier or railing shall be the standard 23 mm x 29 mm slot size. Interior splice bolt holes at these locations may be increased up to 32 mm ø. Only the top 2 and the bottom 2 splice bolts with washers and nuts are required for rail splices at Post No. T4 and the connection to the concrete barrier or railing.
4. Direction of adjacent traffic indicated by ⟶ .
5. The top elevation of Post Nos. T2 through T7 shall not project more than 25 mm above the top elevation of the rail element.

LEGEND

(A) Nested thrie beam elements (one 12 gage element nested over one 10 gage element).

(B) One 10 gage thrie beam element.

(C) One 12 gage thrie beam element.

10 gage = 3.43 mm thick

12 gage = 2.67 mm thick

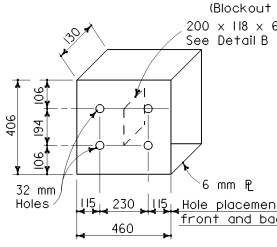

DETAIL A

STRAIGHT METAL BOX SPACER

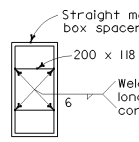

DETAIL B

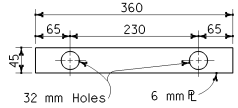

DETAIL C

PLATE 'A'

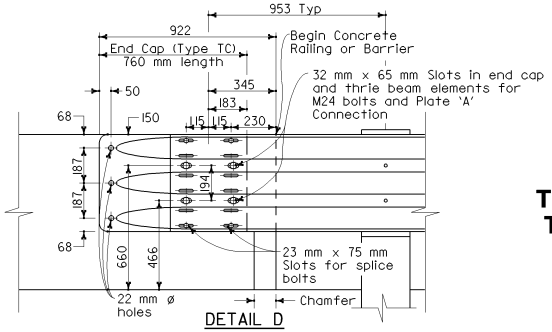

DETAIL D

STATE OF CALIFORNIA
DEPARTMENT OF TRANSPORTATION

THRIE BEAM BARRIER TRANSITION RAILING (TYPE STB)

NO SCALE

ALL DIMENSIONS ARE IN MILLIMETERS UNLESS OTHERWISE SHOWN

A78J

Caltrans Metric

DIST	COUNTY	ROUTE	KILOMETER POST TOTAL PROJECT	SHEET NO.	TOTAL SHEETS

REGISTERED CIVIL ENGINEER

July 1, 2004
PLANS APPROVAL DATE

REGISTERED PROFESSIONAL ENGINEER Ellis K. Hirst No. C17926 Exp. 6-30-05 CIVIL STATE OF CALIFORNIA

The State of California or its officers or agents shall not be responsible for the accuracy or completeness of electronic copies of this plan sheet.

To get to the Caltrans web site, go to: http://www.dot.ca.gov

04-30-04

Back to Table of Contents

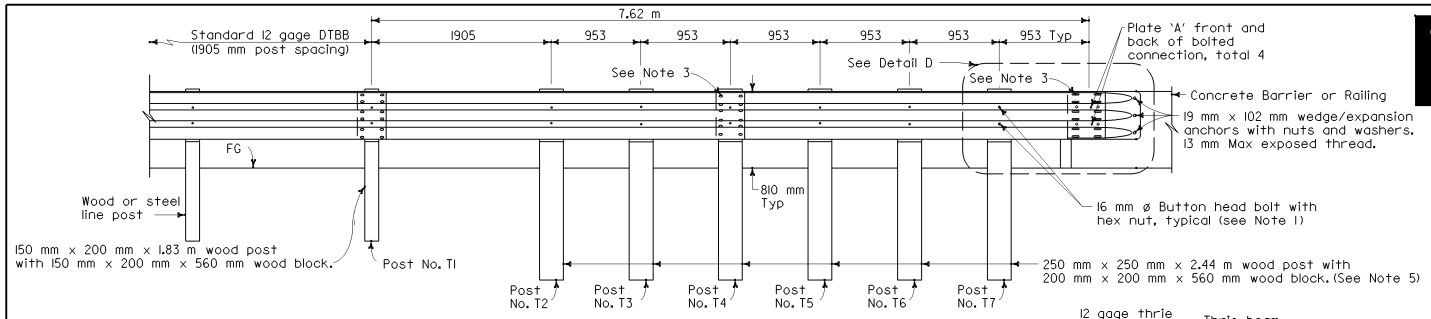

ELEVATION

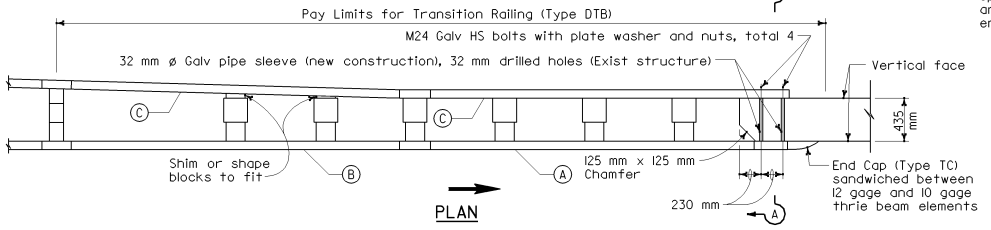

PLAN

TRANSTION RAILING (TYPE DTB)

(No Blockout Attachment)

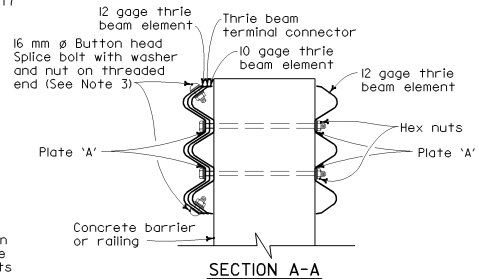

SECTION A-A

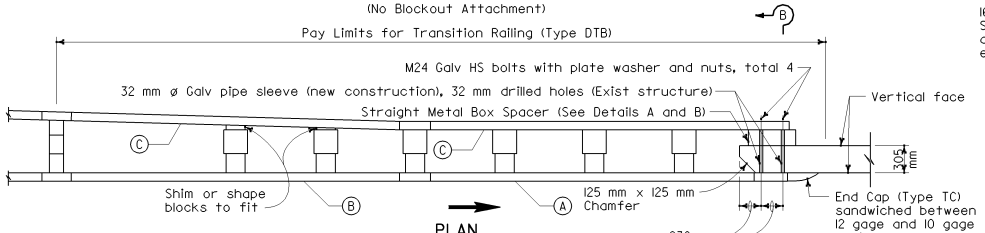

PLAN

TRANSTION RAILING (TYPE DTB)

(Blockout Attachment)

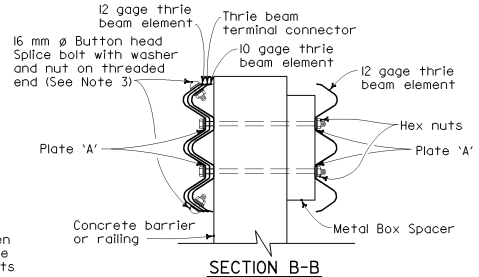

SECTION B-B

LEGEND

(A) Nested thrie beam elements (one 12 gage element nested over one 10 gage element).

(B) One 10 gage thrie beam element.

(C) One 12 gage thrie beam element.

10 gage = 3.43 mm thick

12 gage = 2.67 mm thick

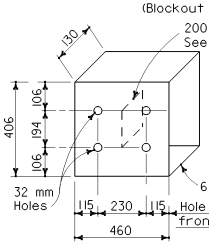

DETAIL A

STRAIGHT METAL BOX SPACER

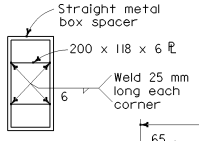

DETAIL B

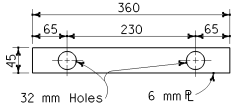

DETAIL C

PLATE 'A'

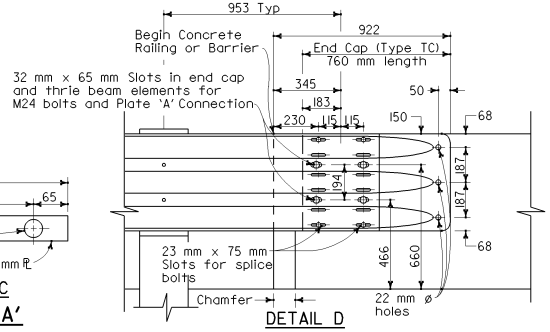

DETAIL D

Caltrans Metric

DIST	COUNTY	ROUTE	KILOMETER POST TOTAL PROJECT	SHEET NO.	TOTAL SHEETS

REGISTERED CIVIL ENGINEER

July 1, 2004

PLANS APPROVAL DATE

REGISTERED PROFESSIONAL ENGINEER Ellis K. Hirst No. C17926 Exp. 6-30-05 CIVIL STATE OF CALIFORNIA

The State of California or its officers or agents shall not be responsible for the accuracy or completeness of electronic copies of this plan sheet.

To get to the Caltrans web site, go to: http://www.dot.ca.gov

NOTES:

1. Use 16 mm ø Button head bolts and hex nuts for connections to posts. No washer on rail face for bolted connections to post.
2. The nested rail elements end cap and single 10 gage thrie beam element, may be spliced together prior to bolting the elements to the wood post and concrete barrier or railing.
3. Exterior splice bolt holes for rail splices at Post No. T4 and the connection to the concrete barrier or railing shall be the standard 23 mm x 29 mm slot size. Interior splice bolt holes at these locations may be increased up to 32 mm ø. Only the top 2 and the bottom 2 splice bolts with washers and nuts are required for rail splices at Post No. T4 and the connection to the concrete barrier or railing.
4. Direction of adjacent traffic indicated by ⟶ .
5. The top elevation of Post Nos. T1 through T7 shall not project more than 25 mm above the top elevation of the rail element.

STATE OF CALIFORNIA
DEPARTMENT OF TRANSPORTATION

THRIE BEAM BARRIER TRANSITION RAILING (TYPE DTB)

NO SCALE

ALL DIMENSIONS ARE IN MILLIMETERS UNLESS OTHERWISE SHOWN

A78K

2004 Std PLAN A78K

04-30-04

Back to Table of Contents

DIST	COUNTY	ROUTE	KILOMETER POST TOTAL PROJECT	SHEET NO.	TOTAL SHEETS

Caltrans Metric

REGISTERED CIVIL ENGINEER

July 1, 2004
PLANS APPROVAL DATE

REGISTERED PROFESSIONAL ENGINEER Ellis K. Hirst No. C17926 Exp. 6-30-05 CIVIL STATE OF CALIFORNIA

The State of California or its officers or agents shall not be responsible for the accuracy or completeness of electronic copies of this plan sheet.

To get to the Caltrans web site, go to: http://www.dot.ca.gov

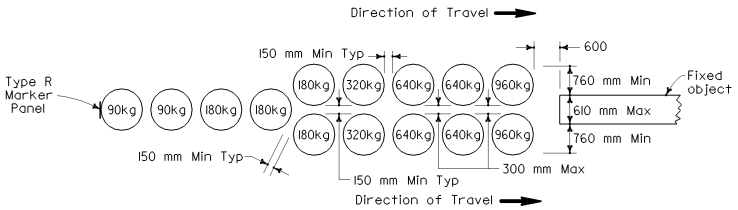

ARRAY 'UI4'

Approach speed 100 km/h or less

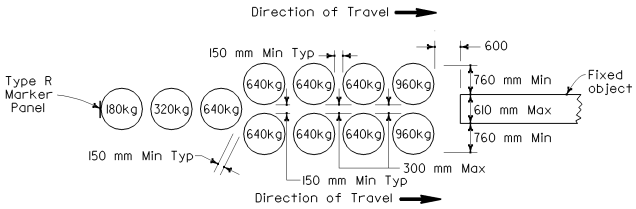

ARRAY 'UI1'

Approach speed 70 km/h or less

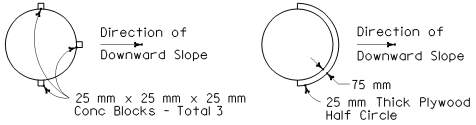

ALTERNATIVE 1

ALTERNATIVE 2

PLAN

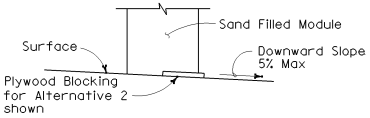

ELEVATION

BRIDGE DECK MODULE BLOCKING DETAILS

(See Note 6)

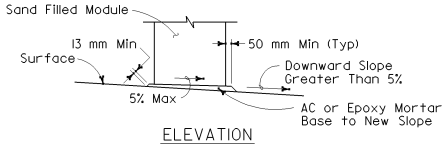

ELEVATION

SLOPED SEAT DETAIL

(See Note 4)

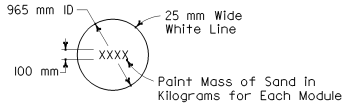

PAINTING DETAIL

(See Note 5)

NOTES

1. (XXX) indicates module location and mass of sand in kilograms for each module. Module spacing is based on the greater diameter of the modules.
2. All sand masses are nominal.
3. Each module is to contain amount of sand indicated, supported according to the manufacturer's instructions.
4. Modules shall be placed on asphalt concrete, epoxy mortar or concrete surface. Modules to be placed on surfacing with greater than 5% downward slope shall be seated as shown.
5. Mass of sand and outline of each module shall be painted on the surface at each module location.
6. Module blocking, epoxied to the deck surface, is required for all modules placed on bridge decks. Two acceptable alternatives are shown. Other alternatives recommended by the manufacturer and approved by the Engineer will be accepted.
7. Place the top of the Type R marker panel 25 mm below the module lid.

STATE OF CALIFORNIA
DEPARTMENT OF TRANSPORTATION

CRASH CUSHION, SAND FILLED (UNIDIRECTIONAL)

NO SCALE

ALL DIMENSIONS ARE IN MILLIMETERS UNLESS OTHERWISE SHOWN

A81A

2004 Std PLAN A81A

04-20-04

Back to Table of Contents

DIST	COUNTY	ROUTE	KILOMETER POST TOTAL PROJECT	SHEET NO.	TOTAL SHEETS

Caltrans Metric

REGISTERED CIVIL ENGINEER

July 1, 2004
PLANS APPROVAL DATE

REGISTERED PROFESSIONAL ENGINEER Ellis K. Hirst No. C17926 Exp. 6-30-05 CIVIL STATE OF CALIFORNIA

The State of California or its officers or agents shall not be responsible for the accuracy or completeness of electronic copies of this plan sheet.

To get to the Caltrans web site, go to: http://www.dot.ca.gov

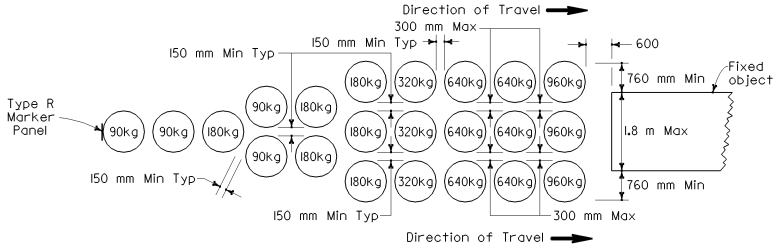

ARRAY 'U21'

Approach speed 100 km/h or less

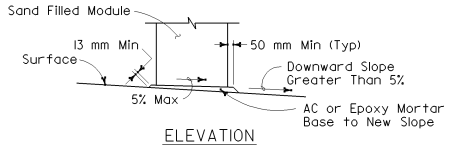

ELEVATION

SLOPED SEAT DETAIL

(See Note 4)

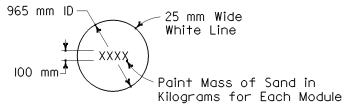

PAINTING DETAIL

(See Note 5)

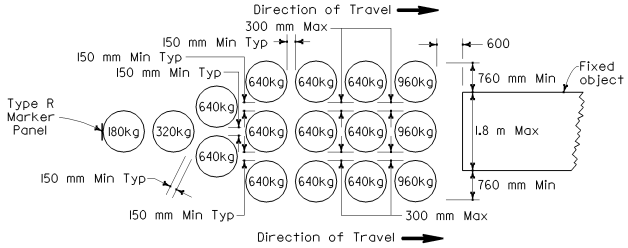

ARRAY 'U16'

Approach speed 70 km/h or less

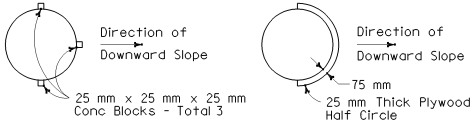

ALTERNATIVE 1 PLAN ALTERNATIVE 2

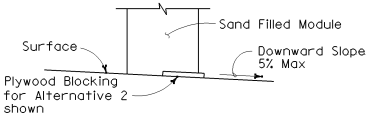

ELEVATION

BRIDGE DECK MODULE BLOCKING DETAILS

(See Note 6)

NOTES

1. (XXX) indicates module location and mass of sand in kilograms for each module. Module spacing is based on the greater diameter of the modules.
2. All sand masses are nominal.
3. Each module is to contain amount of sand indicated, supported according to the manufacturer's instructions.
4. Modules shall be placed on asphalt concrete, epoxy mortar or concrete surface. Modules to be placed on surfacing with greater than 5% downward slope shall be seated as shown.
5. Mass of sand and outline of each module shall be painted on the surface at each module location.
6. Module blocking, epoxied to the deck surface, is required for all modules placed on bridge decks. Two acceptable alternatives are shown. Other alternatives recommended by the manufacturer and approved by the Engineer will be accepted.
7. Place the top of the Type R marker panel 25 mm below the module lid.

STATE OF CALIFORNIA
DEPARTMENT OF TRANSPORTATION

CRASH CUSHION, SAND FILLED (UNIDIRECTIONAL)

NO SCALE

ALL DIMENSIONS ARE IN MILLIMETERS UNLESS OTHERWISE SHOWN

A81B

2004 Std PLAN A81B

04-20-04

Back to Table of Contents

DIST	COUNTY	ROUTE	KILOMETER POST TOTAL PROJECT	SHEET NO.	TOTAL SHEETS

Caltrans Metric

REGISTERED CIVIL ENGINEER

July 1, 2004
PLANS APPROVAL DATE

REGISTERED PROFESSIONAL ENGINEER
Ellis K. Hirst
No. C17926
Exp. 6-30-05
CIVIL
STATE OF CALIFORNIA

The State of California or its officers or agents shall not be responsible for the accuracy or completeness of electronic copies of this plan sheet.

To get to the Caltrans web site, go to: http://www.dot.ca.gov

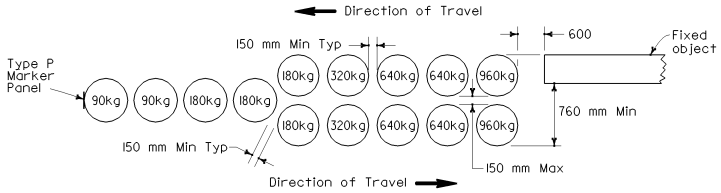

ARRAY 'B14'

Approach speed 100 km/h or less

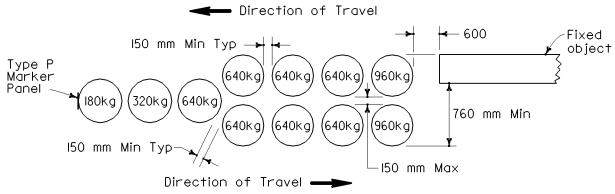

ARRAY 'B11'

Approach speed 70 km/h or less

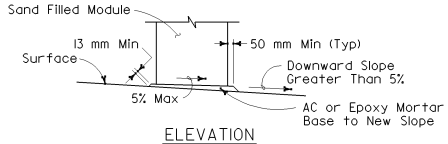

ELEVATION

SLOPED SEAT DETAIL

(See Note 5)

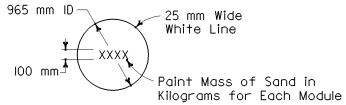

PAINTING DETAIL

(See Note 6)

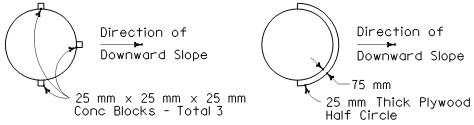

ALTERNATIVE 1 ALTERNATIVE 2

PLAN

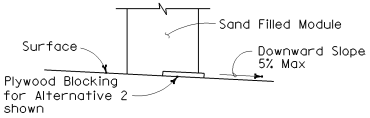

ELEVATION

BRIDGE DECK MODULE BLOCKING DETAILS

(See Note 7)

NOTES

1. (XXX) indicates module location and mass of sand in kilograms for each module. Module spacing is based on the greater diameter of the module.
2. All sand masses are nominal.
3. Each module is to contain amount of sand indicated, supported according to the manufacturer's instructions.
4. Bidirectional crash cushion arrays may be angled toward approaching traffic. Amount of angle not to exceed 10 degrees.
5. Modules shall be placed on asphalt concrete, epoxy mortar or concrete surface. Modules to be placed on surfacing with greater than 5% downward slope shall be seated as shown.
6. Mass of sand and outline of each module shall be painted on the surface at each module location.
7. Module blocking, epoxied to the deck surface, is required for all modules placed on bridge decks. Two acceptable alternatives are shown. Other alternatives recommended by the manufacturer and approved by the Engineer will be accepted.
8. Place the Type P marker panel so that the bottom of the panel is at the bottom of the module.

STATE OF CALIFORNIA
DEPARTMENT OF TRANSPORTATION

CRASH CUSHION, SAND FILLED (BIDIRECTIONAL)

NO SCALE

ALL DIMENSIONS ARE IN MILLIMETERS UNLESS OTHERWISE SHOWN

A81C

2004 Std PLAN A81C

04-20-04

Back to Table of Contents

NOTES:

1. For additional details of Crash Cushion (Type CAT), refer to the manufacturer's installation instructions.
2. Crash Cushion (Type CAT) may be used at sites where the sides of the crash cushion would be exposed to opposing directions of travel (bidirectional traffic) or the same direction of travel (unidirectional traffic). For locations where traffic would only be on one side of the CAT system, see Standard Plan A77L4.
3. The Crash Cushion Backup is required for all Crash Cushion (Type CAT) installations. This allows the slotted rail elements to slide over the face of the unslotted rail elements.
4. For length and type of railing or barrier the crash cushion is attached to, see Project Plans.
5. Both of the 3.43 mm thick slotted rail elements have an attachment plate welded to the back side of one end of each rail element. Attach the welded plate end of the rail elements to Post No. 4 prior to splicing the 2.67 mm thick slotted rail element over the 3.43 mm thick slotted rail element.
6. The 2.67 mm thick slotted rail elements have four 19 mm diameter holes near one end of the rail elements for the attachment of the spacer channel. Attach this end of the rail elements to Post No. 2.
7. Attach steel soil plate to steel foundation tube with 16 mm ø x 190 mm hex head bolts with hex nuts (21 mm ø holes in plate and in two sides of tube to accommodate hex bolts).
8. The 150 mm x 200 mm knockout tube is to be located 100 mm down from top of wood post. Attach the knockout tube to the post with two 10 mm ø lag screws and flat washers.
9. Attach strut to Post Nos. 1 and 2 foundation tubes with 16 mm ø hex head bolts, washers, and hex nuts. Bolts extend through the strut, steel foundation tube, and wood posts.
10. Do not attach the rail elements to Post Nos. 3, 5 and 6.
11. Yellow retroreflective sheeting, as provided by the Crash Cushion (Type CAT) manufacturer, shall be adhered to the rounded end of nose plate. The sheeting shall be consistent with the design pattern and colors of a Type P object marker panel for unidirectional traffic and that of a TYPE R object marker panel for bidirectional traffic. The sheeting shall be positioned on the end of the nose plate so that it is visible to approaching traffic.
12. A 1830 mm length steel foundation tube, TS 203 x 152 x 4.8, without a soil plate, may be furnished and installed in place of the 1375 mm length steel foundation tube and soil plate shown. Minimum embedment of the 1830 mm length tube shall be 1760 mm. A 16 mm ø hex head bolt and nut shall be installed in the hole in 1830 mm length tube to keep the wood post from dropping into the tube.

Caltrans Metric

DIST	COUNTY	ROUTE	KILOMETER POST TOTAL PROJECT	SHEET NO.	TOTAL SHEETS

REGISTERED CIVIL ENGINEER

July 1, 2004
PLANS APPROVAL DATE

REGISTERED PROFESSIONAL ENGINEER Ellis K. Hirst No. C17926 Exp. 6-30-05 CIVIL STATE OF CALIFORNIA

The State of California or its officers or agents shall not be responsible for the accuracy or completeness of electronic copies of this plan sheet.

To get to the Caltrans web site, go to: http://www.dot.ca.gov

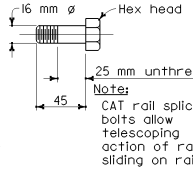

CAT RAIL SPLICE BOLT
Use at Post Nos. 4 and 6

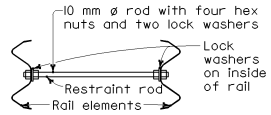

SECTION D-D

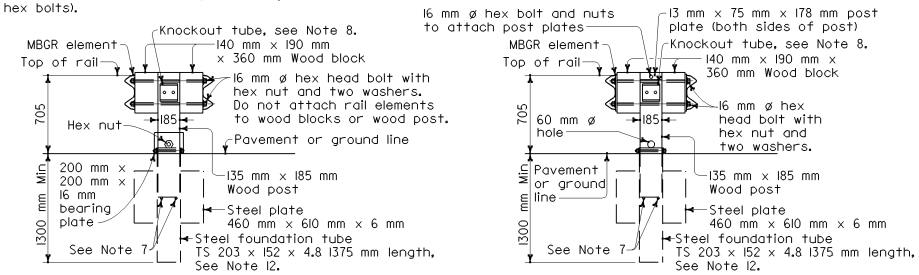

SECTION A-A

SECTION B-B
See Note 5

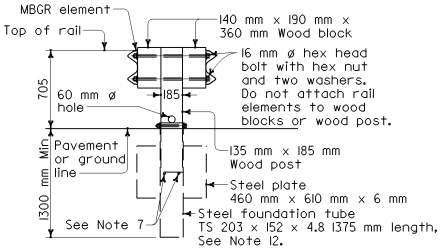

SECTION C-C

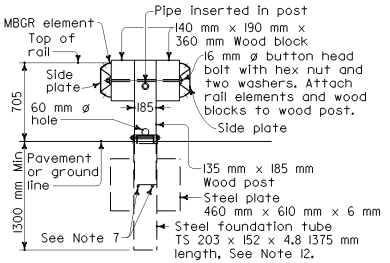

SECTION E-E

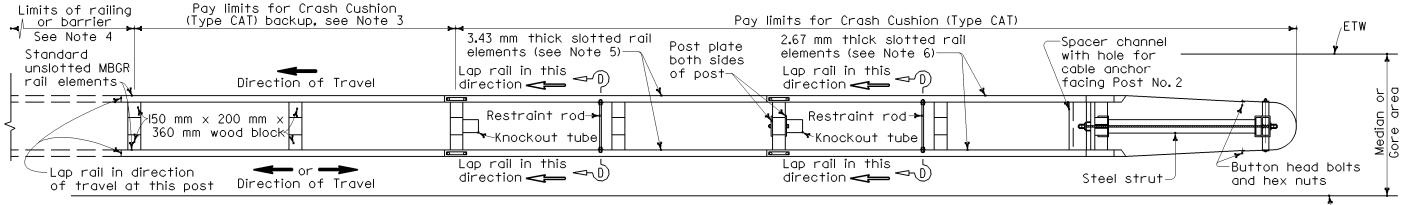

PLAN

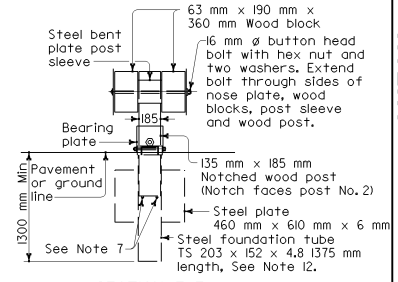

SECTION F-F

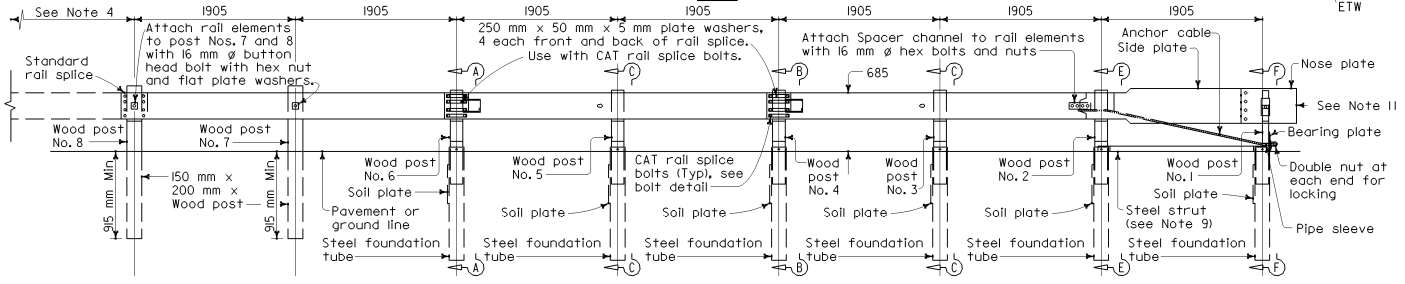

ELEVATION

CRASH CUSHION (TYPE CAT)
See Note 2

STATE OF CALIFORNIA
DEPARTMENT OF TRANSPORTATION

CRASH CUSHION (TYPE CAT)

NO SCALE

ALL DIMENSIONS ARE IN MILLIMETERS UNLESS OTHERWISE SHOWN

A82A1

2004 Std PLAN A82A1

04-20-04

Back to Table of Contents

NOTES:

1. For additional details of Crash Cushion (Type ADIEM), refer to the manufacturer's installation instructions.
2. Crash Cushion (Type ADIEM) may be used at sites where the sides of the crash cushion would be exposed to opposing directions of travel (bidirectional traffic) or the same direction of travel (unidirectional traffic).
3. The crash cushion concrete base shall be placed on a smooth surface (pavement or well compacted soil base) on the same horizontal plane as the barrier or railing it is to be attached to.
4. Installation of the crash cushion concrete base shall be accomplished by driving the anchor rods in well compacted soil base or soft asphalt concrete or by driving the anchor rods in drilled holes in hard asphalt concrete or portland cement concrete. See Table A for the location and lengths of anchor rod to be used.
5. Attach the crash cushion to the barrier or railing by bolting the splice angle plates to the crash cushion and the barrier or railing.
6. Lubricate the crash cushion base track and slide the modules along the track to the positions shown.
7. Yellow retroreflective sheeting, as provided by the crash cushion manufacturer, shall be adhered to the first module facing approcaching traffic. This sheeting shall be consistent with the design pattern and colors of a Type P object marker panel for unidirectional traffic and that of the Type R object marker panel for bidirectional traffic.
8. For the length and type of barrier or railing the crash cushion is to be attached to, see the Project Plans.

Caltrans Metric

DIST	COUNTY	ROUTE	KILOMETER POST TOTAL PROJECT	SHEET NO.	TOTAL SHEETS

REGISTERED CIVIL ENGINEER

July 1, 2004
PLANS APPROVAL DATE

REGISTERED PROFESSIONAL ENGINEER Ellis K. Hirst No. C17926 Exp. 6-30-05 CIVIL STATE OF CALIFORNIA

The State of California or its officers or agents shall not be responsible for the accuracy or completeness of electronic copies of this plan sheet.

To get to the Caltrans web site, go to: http://www.dot.ca.gov

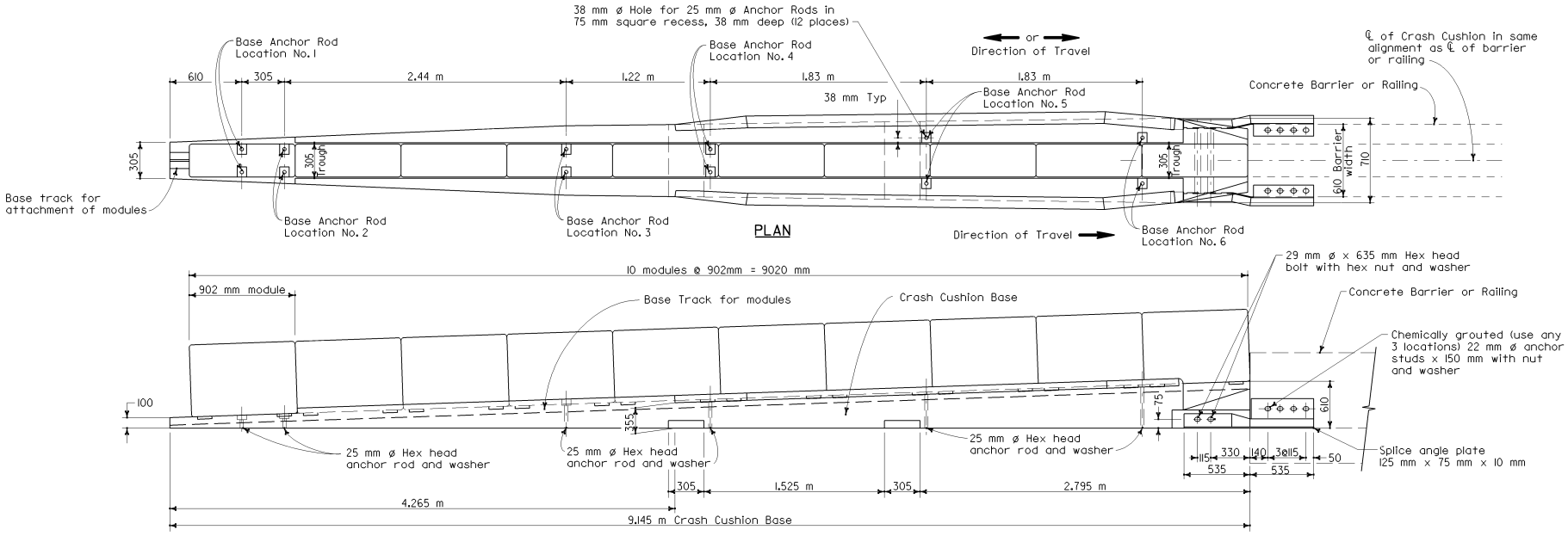

ELEVATION

CRASH CUSHION (TYPE ADIEM)

See Note 3

TABLE A

BASE ANCHOR RODS AND LOCATIONS	PORTLAND CEMENT CONCRETE PAVEMENT	ASPHALT CONCRETE PAVEMENT	WELL COMPACTED BASE
	Rod Length	Rod Length	Rod Length
2 at Location No. 1	455 mm	610 mm	760 mm
2 at Location No. 2	455 mm	610 mm	760 mm
2 at Location No. 3	610 mm	760 mm	915 mm
2 at Location No. 4	610 mm	760 mm	915 mm
2 at Location No. 5	915 mm	1065 mm	1220 mm
2 at Location No. 6	915 mm	1065 mm	1220 mm

STATE OF CALIFORNIA
DEPARTMENT OF TRANSPORTATION

CRASH CUSHION (TYPE ADIEM)

NO SCALE

ALL DIMENSIONS ARE IN MILLIMETERS UNLESS OTHERWISE SHOWN

A82B1

2004 Std PLAN A82B1

04-20-04

Back to Table of Contents

DIST	COUNTY	ROUTE	KILOMETER POST TOTAL PROJECT	SHEET NO.	TOTAL SHEETS

Caltrans Metric

REGISTERED CIVIL ENGINEER

July 1, 2004
PLANS APPROVAL DATE

REGISTERED PROFESSIONAL ENGINEER Ellis K. Hirst No. C17926 Exp. 6-30-05 CIVIL STATE OF CALIFORNIA

The State of California or its officers or agents shall not be responsible for the accuracy or completeness of electronic copies of this plan sheet.

To get to the Caltrans web site, go to: http://www.dot.ca.gov

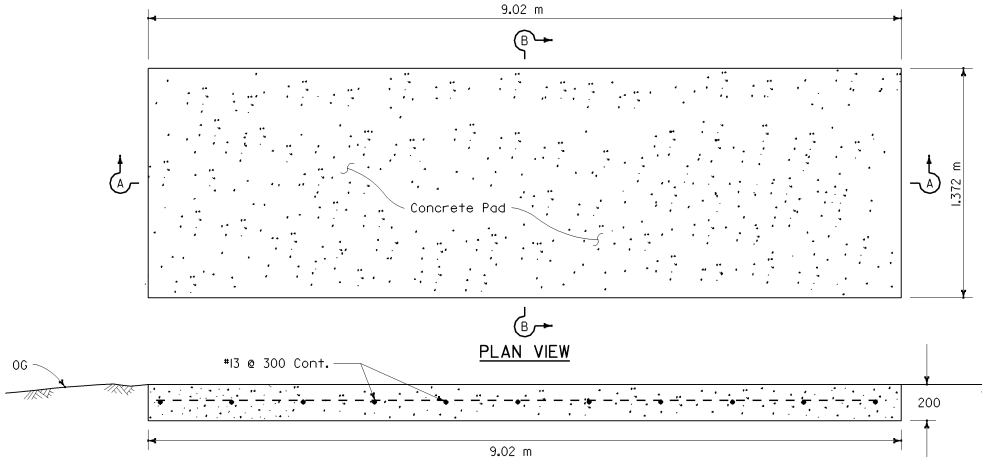

PLAN VIEW

SECTION A-A

CONCRETE ANCHOR SLAB

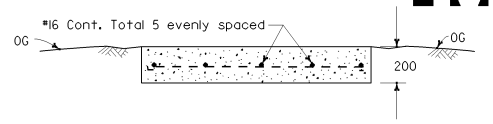

SECTION B-B

NOTES

1. For additional details of this crash cushion, refer to manufacturer's installation instructions.
2. For details of the REACT Crash Cushion with self contained backup support (no concrete backup block), see Standard Plan A82D1.
3. The base track frame with cylinders attached comes from the manufacturer as a completely pre-assembled unit.
4. Place the crash cushion unit on the cured concrete anchor slab and use the base track frame of the crash cushion as a template for drilling anchor bolt holes. Drill holes in slab and attach crash cushion with wedge anchor bolts supplied by the manufacturer.
5. Attach last cylinder to concrete backup block with manufacturer supplied fastener in such manner as recommended by the manufacturer.
6. Attach the manufacturer supplied side cable anchor plates to the cured concrete backup block with the manufacturer supplied bolts in such manner as recommended by the manufacturer.
7. Place manufacturer supplied cover over cylinders and attach cover to cylinders with manufacturer supplied fasteners.

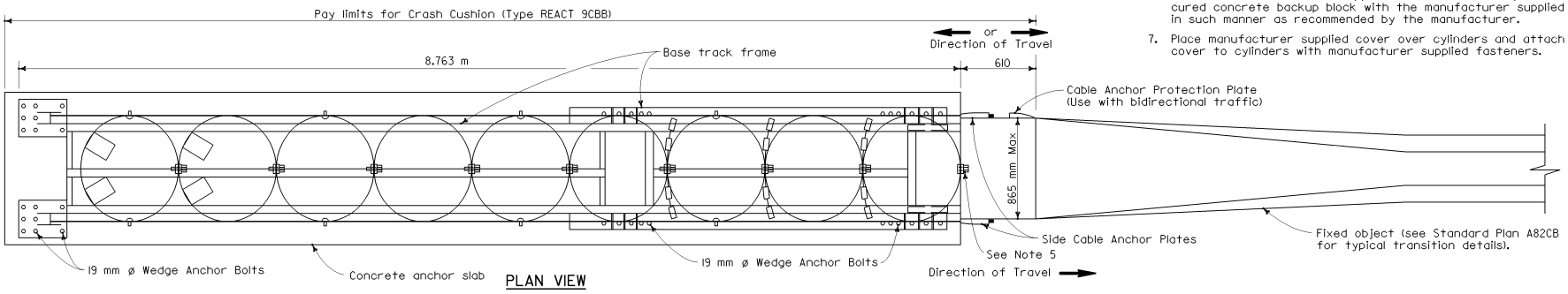

PLAN VIEW

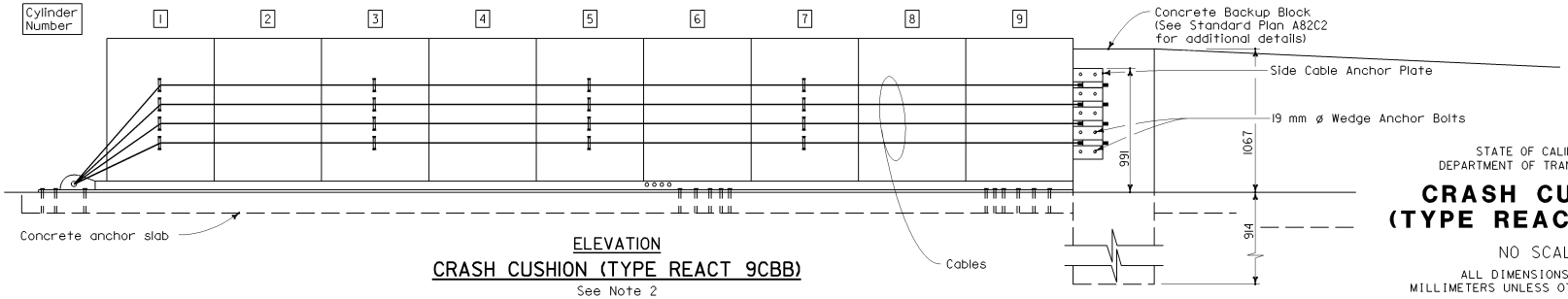

ELEVATION

CRASH CUSHION (TYPE REACT 9CBB)

See Note 2

STATE OF CALIFORNIA
DEPARTMENT OF TRANSPORTATION

CRASH CUSHION (TYPE REACT 9CBB)

NO SCALE

ALL DIMENSIONS ARE IN MILLIMETERS UNLESS OTHERWISE SHOWN

A82C1

04-20-04

Back to Table of Contents

DIST	COUNTY	ROUTE	KILOMETER POST TOTAL PROJECT	SHEET NO.	TOTAL SHEETS

Caltrans Metric

REGISTERED CIVIL ENGINEER

July 1, 2004
PLANS APPROVAL DATE

REGISTERED PROFESSIONAL ENGINEER Ellis K. Hirst No. C17926 Exp. 6-30-05 CIVIL STATE OF CALIFORNIA

The State of California or its officers or agents shall not be responsible for the accuracy or completeness of electronic copies of this plan sheet.

To get to the Caltrans web site, go to: http://www.dot.ca.gov

NOTES

1. For additional details of Crash Cushion (Type REACT 9CBB), see Standard Plan A82C1.
2. For transition details of fixed object to backup block, see Standard Plan A82C3.
3. For details of the REACT Crash Cushion with self contained backup support (no concrete backup block), see Standard plan A82D1.

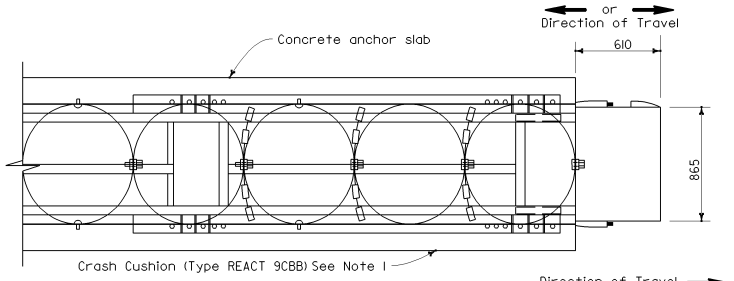

PLAN VIEW

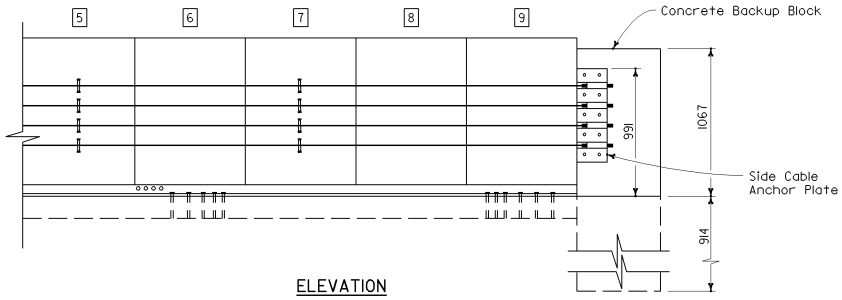

ELEVATION

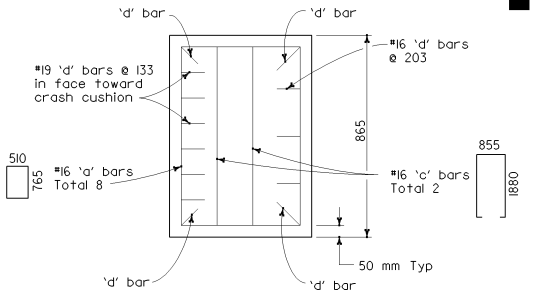

PLAN VIEW

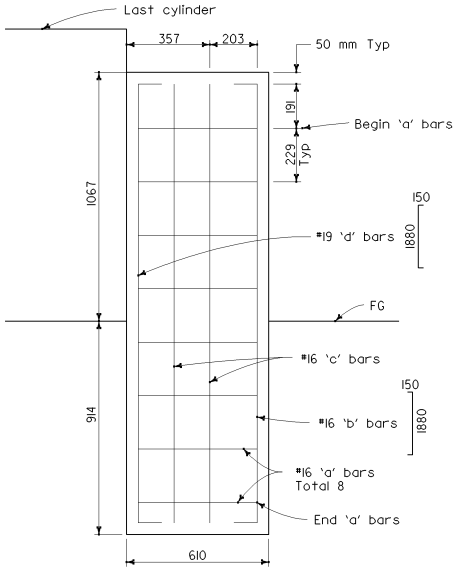

ELEVATION

CONCRETE BACKUP BLOCK

STATE OF CALIFORNIA
DEPARTMENT OF TRANSPORTATION

CRASH CUSHION (TYPE REACT 9CBB) BACKUP BLOCK DETAILS

NO SCALE

ALL DIMENSIONS ARE IN MILLIMETERS UNLESS OTHERWISE SHOWN

A82C2

2004 Std PLAN A82C2

04-20-04

Back to Table of Contents

NOTES

1. For additional details of Crash Cushion (Type REACT 9CBB), see Standard Plan A82C1.
2. For additional details of the concrete backup block, see Standard Plan A82C2.
3. Transitions for other types of concrete barrier similar to that shown for Type 60.

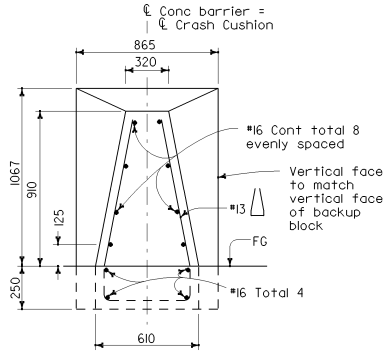

SECTION A-A

See Note 3

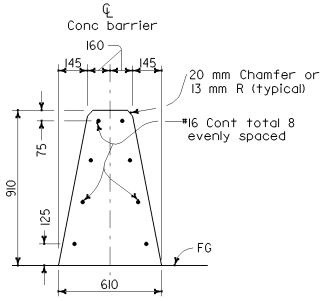

SECTION B-B

(Type 60 Barrier shown)

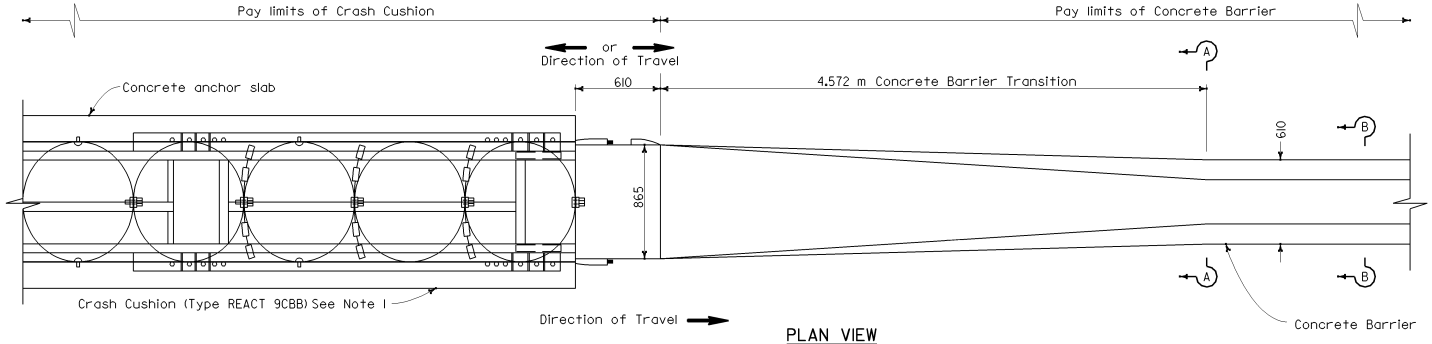

PLAN VIEW

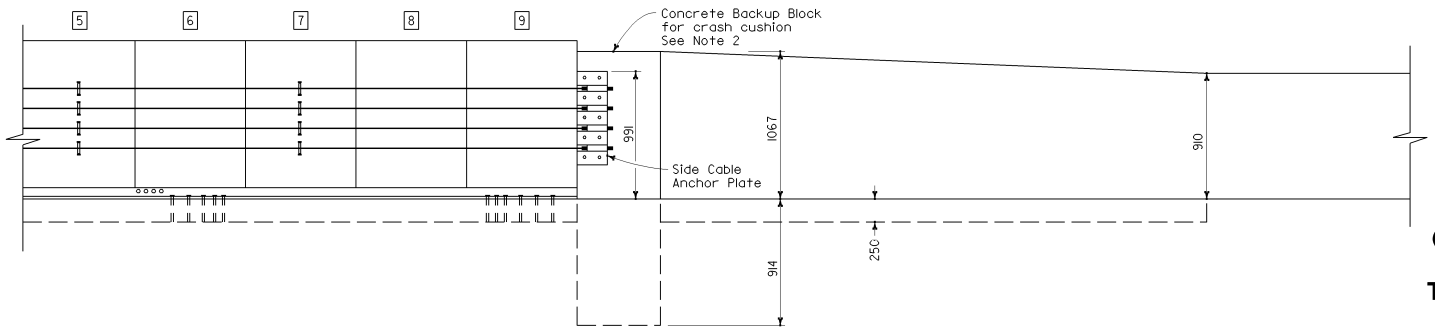

ELEVATION

STATE OF CALIFORNIA
DEPARTMENT OF TRANSPORTATION

CRASH CUSHION (TYPE REACT 9CBB) CONCRETE BARRIER TRANSITION DETAILS

NO SCALE

ALL DIMENSIONS ARE IN MILLIMETERS UNLESS OTHERWISE SHOWN

A82C3

Caltrans Metric

DIST	COUNTY	ROUTE	KILOMETER POST TOTAL PROJECT	SHEET NO.	TOTAL SHEETS

REGISTERED CIVIL ENGINEER

July 1, 2004
PLANS APPROVAL DATE

REGISTERED PROFESSIONAL ENGINEER Ellis K. Hirst No. C17926 Exp. 6-30-05 CIVIL STATE OF CALIFORNIA

The State of California or its officers or agents shall not be responsible for the accuracy or completeness of electronic copies of this plan sheet.

To get to the Caltrans web site, go to: http://www.dot.ca.gov

2004 Std PLAN 182C3

04-21-04

Back to Table of Contents

DIST	COUNTY	ROUTE	KILOMETER POST TOTAL PROJECT	SHEET NO.	TOTAL SHEETS

Caltrans Metric

REGISTERED CIVIL ENGINEER

July 1, 2004
PLANS APPROVAL DATE

REGISTERED PROFESSIONAL ENGINEER
Ellis K. Hirst
No. C17926
Exp. 6-30-05
CIVIL
STATE OF CALIFORNIA

The State of California or its officers or agents shall not be responsible for the accuracy or completeness of electronic copies of this plan sheet.

To get to the Caltrans web site, go to: http://www.dot.ca.gov

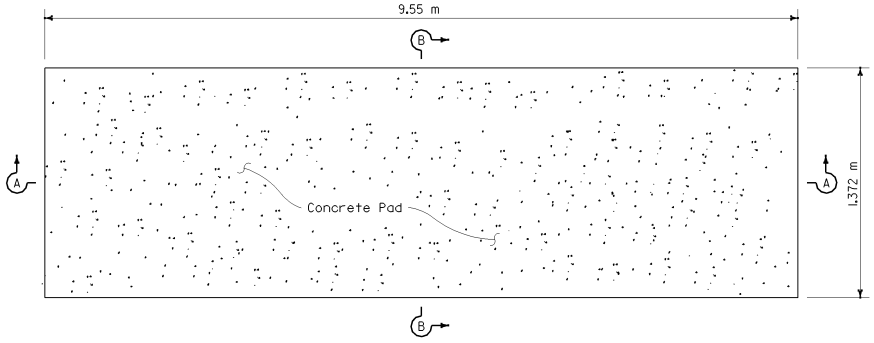

PLAN VIEW

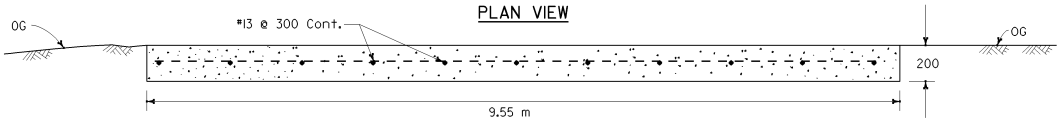

SECTION A-A

CONCRETE ANCHOR SLAB

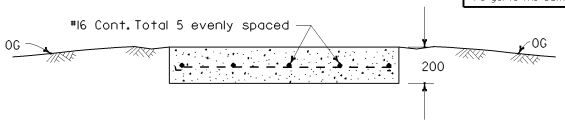

SECTION B-B

NOTES

1. For additional details of this crash cushion, refer to manufacturer's installation instructions.
2. For details of the REACT Crash Cushion with concrete backup block (no self contained backup support), see Standard Plan A82C1.
3. This crash cushion comes from the manufacturer as a completely pre-assembled unit, including the self contained cable backup support.
4. Place the crash cushion unit on the cured concrete anchor slab and use the base track frame of the crash cushion as a template for drilling anchor bolt holes. Drill holes in slab and attach crash cushion with wedge anchor bolts supplied by the manufacturer.
5. Place manufacturer supplied cover over cylinders and attach cover to cylinders with manufacturer supplied fasteners.

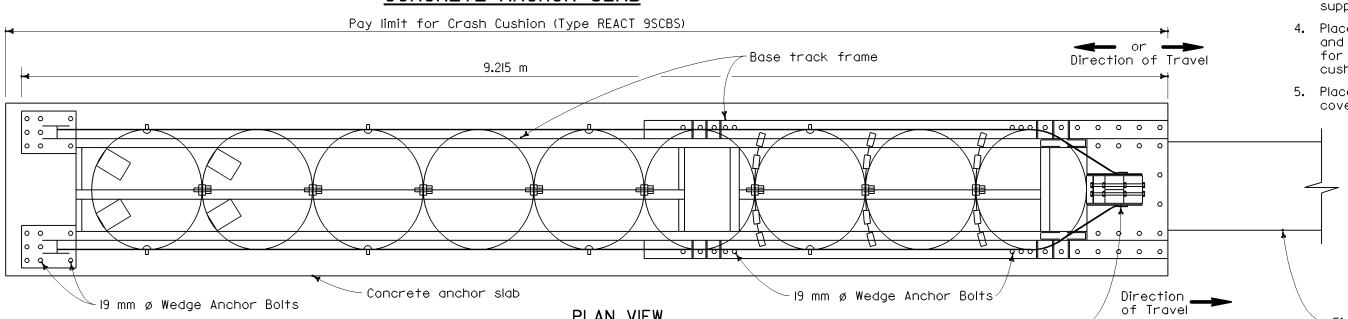

PLAN VIEW

Fixed Object, see Standard Plan A82D2. for alignment and connection details of crash cushion with the fixed object.

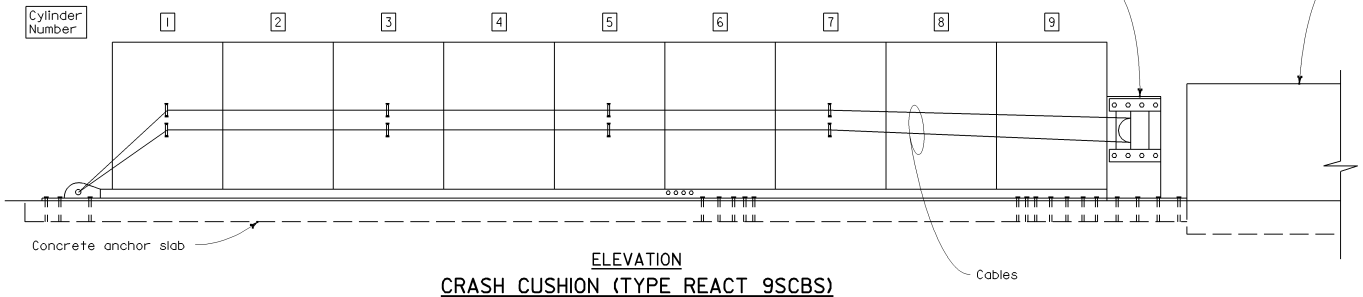

ELEVATION

CRASH CUSHION (TYPE REACT 9SCBS)

See Note 2

STATE OF CALIFORNIA
DEPARTMENT OF TRANSPORTATION

CRASH CUSHION (TYPE REACT 9SCBS)

NO SCALE

ALL DIMENSIONS ARE IN MILLIMETERS UNLESS OTHERWISE SHOWN

A82D1

2004 Std PLAN A82D1

04-20-04

Back to Table of Contents

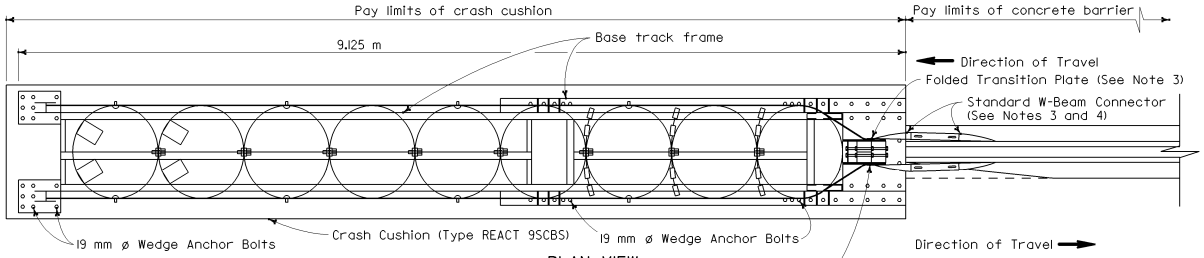

PLAN VIEW

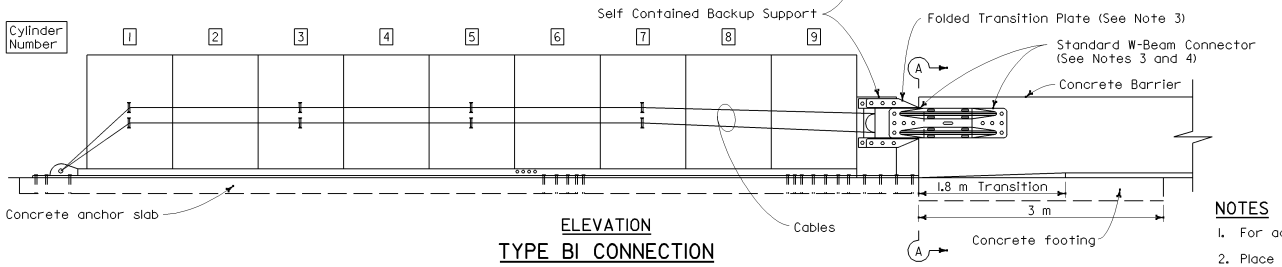

ELEVATION

TYPE BI CONNECTION

(Bidirectional Traffic)

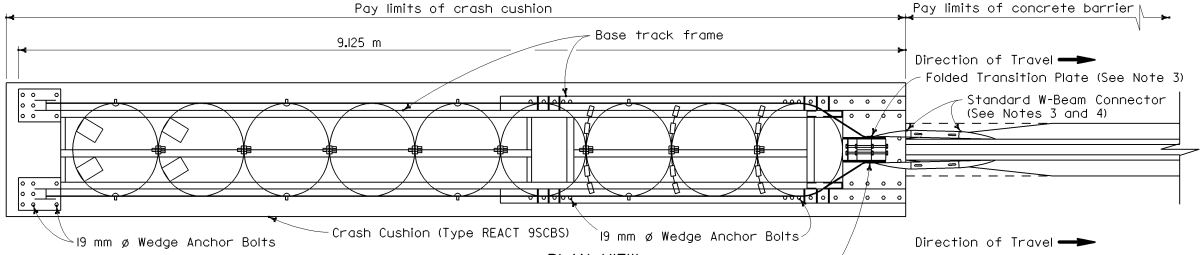

PLAN VIEW

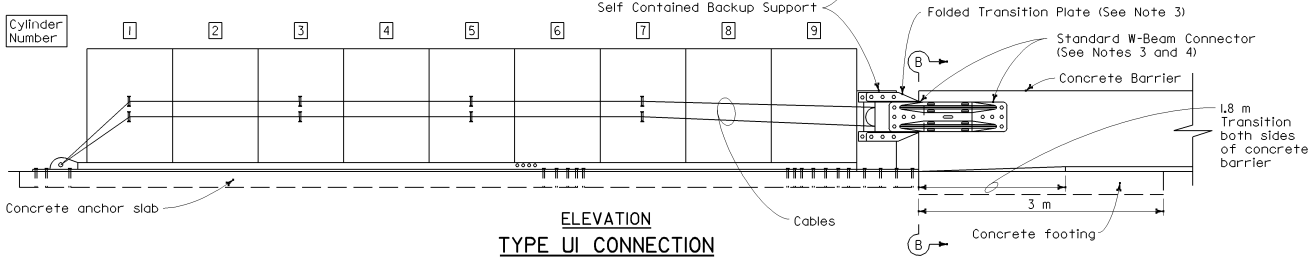

ELEVATION

TYPE UI CONNECTION

(Unidirectional Traffic)

NOTES

1. For additional details of Crash Cushion (Type REACT 9SCBS), see Standard Plan A82D1.
2. Place this reinforcement for the full 3 meter length of the terminus of the concrete barrier.
3. Attach manufacturer supplied folded transition plates and W-Beam connectors to backup support with manufacturer supplied bolts.
4. Attach W-Beam Connectors to barrier with manufacturer supplied anchor bolts in the manner recommended by the manufacturer.

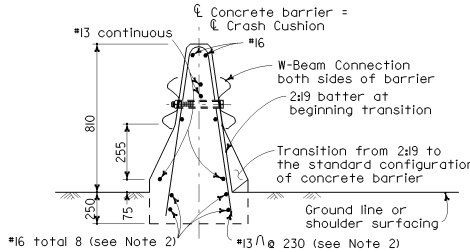

SECTION A-A

(Type 50 Barrier shown)

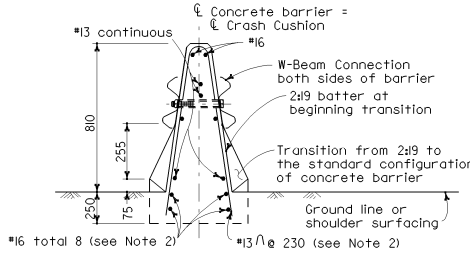

SECTION B-B

(Type 50 Barrier shown)

STATE OF CALIFORNIA
DEPARTMENT OF TRANSPORTATION

CRASH CUSHION (TYPE REACT 9SCBS) CONNECTION TO CONCRETE BARRIER

NO SCALE

ALL DIMENSIONS ARE IN MILLIMETERS UNLESS OTHERWISE SHOWN

A82D2

Caltrans Metric

DIST	COUNTY	ROUTE	KILOMETER POST TOTAL PROJECT	SHEET NO.	TOTAL SHEETS

REGISTERED CIVIL ENGINEER

July 1, 2004
PLANS APPROVAL DATE

REGISTERED PROFESSIONAL ENGINEER Ellis K. Hirst No. C17926 Exp. 6-30-05 CIVIL STATE OF CALIFORNIA

The State of California or its officers or agents shall not be responsible for the accuracy or completeness of electronic copies of this plan sheet.

To get to the Caltrans web site, go to: http://www.dot.ca.gov

04-20-04

Back to Table of Contents

Caltrans Metric

DIST	COUNTY	ROUTE	KILOMETER POST TOTAL PROJECT	SHEET NO.	TOTAL SHEETS

REGISTERED CIVIL ENGINEER

July 1, 2004
PLANS APPROVAL DATE

REGISTERED PROFESSIONAL ENGINEER Ellis K. Hirst No. C17926 Exp. 6-30-05 CIVIL STATE OF CALIFORNIA

The State of California or its officers or agents shall not be responsible for the accuracy or completeness of electronic copies of this plan sheet.

To get to the Caltrans web site, go to: http://www.dot.ca.gov

NOTES

1. For additional details of Crash Cushion (Type REACT 9SCBS), see Standard Plan A82D1.
2. The 150 mm offset of the centerline of the crash cushion from the centerline of barrier is only to be used for bidirectional traffic locations.
3. Where sufficient median width is not available to offset the crash cushion, as shown, see Standard Plans A82D2 and A82C3.
4. For details of typical concrete barrier end anchorage, see Standard Plan A76B.

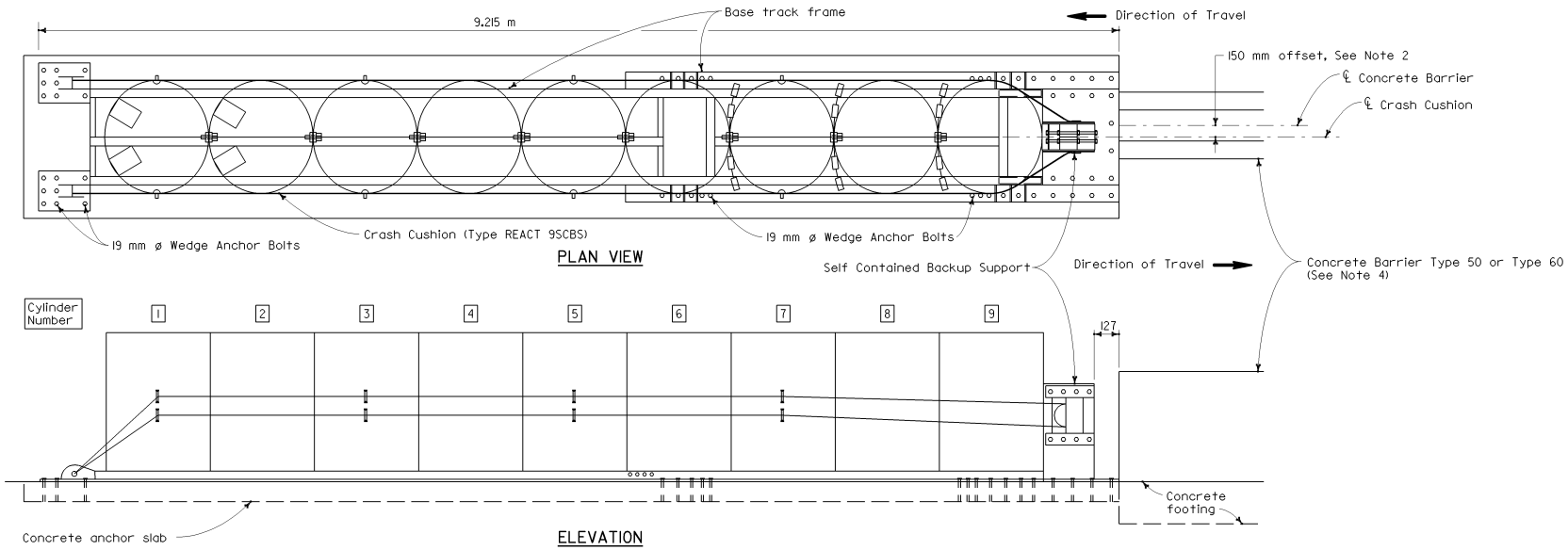

PLAN VIEW

ELEVATION

TYPE BOI CONNECTION

(Bidirectional Traffic)
See Notes 2 and 3

STATE OF CALIFORNIA
DEPARTMENT OF TRANSPORTATION

CRASH CUSHION (TYPE REACT 9SCBS) ALIGNMENT OFFSET DETAILS

NO SCALE

ALL DIMENSIONS ARE IN MILLIMETERS UNLESS OTHERWISE SHOWN

A82D3

04-20-04

Back to Table of Contents

DIST	COUNTY	ROUTE	KILOMETER POST TOTAL PROJECT	SHEET NO.	TOTAL SHEETS

Caltrans Metric

REGISTERED CIVIL ENGINEER

July 1, 2004
PLANS APPROVAL DATE

REGISTERED PROFESSIONAL ENGINEER Ellis K. Hirst No. C17926 Exp. 6-30-05 CIVIL STATE OF CALIFORNIA

The State of California or its officers or agents shall not be responsible for the accuracy or completeness of electronic copies of this plan sheet.

To get to the Caltrans web site, go to: http://www.dot.ca.gov

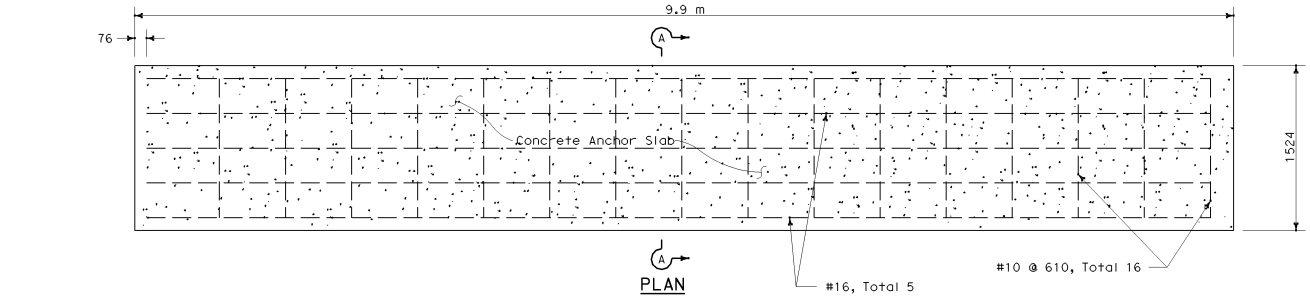

PLAN

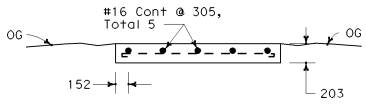

SECTION A-A

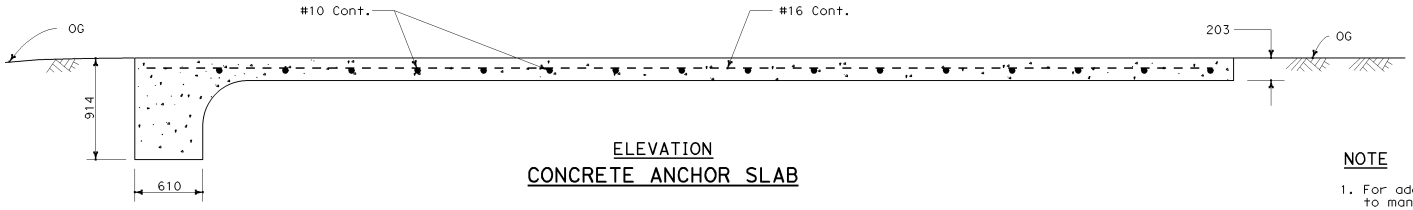

ELEVATION
CONCRETE ANCHOR SLAB

NOTE

1. For additional details of this crash cushion, refer to manufacturer's installation instructions.

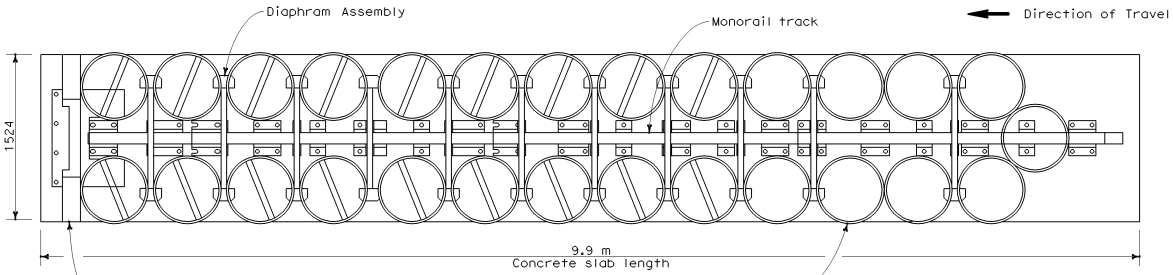

PLAN

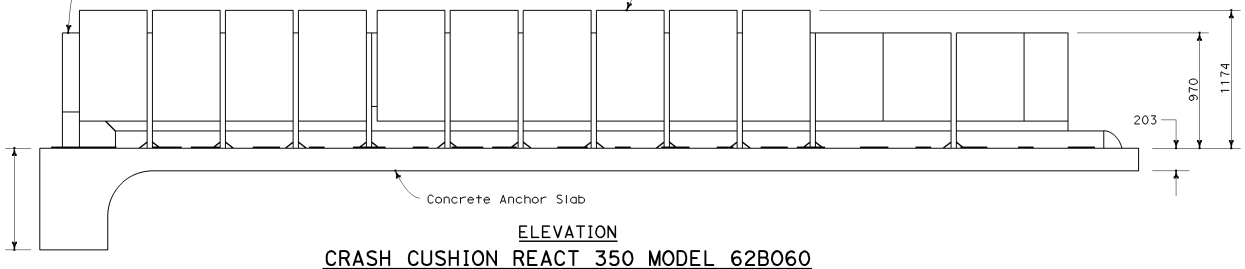

ELEVATION
CRASH CUSHION REACT 350 MODEL 62B060

STATE OF CALIFORNIA
DEPARTMENT OF TRANSPORTATION

CRASH CUSHION (TYPE REACT 62B060)

NO SCALE

ALL DIMENSIONS ARE IN MILLIMETERS UNLESS OTHERWISE SHOWN

A82D4

04-20-04

Back to Table of Contents

DIST	COUNTY	ROUTE	KILOMETER POST TOTAL PROJECT	SHEET NO.	TOTAL SHEETS

Caltrans Metric

REGISTERED CIVIL ENGINEER

July 1, 2004
PLANS APPROVAL DATE

REGISTERED PROFESSIONAL ENGINEER Glenn DeCou No. C34547 Exp. 9-30-05 CIVIL STATE OF CALIFORNIA

The State of California or its officers or agents shall not be responsible for the accuracy or completeness of electronic copies of this plan sheet.

To get to the Caltrans web site, go to: http://www.dot.ca.gov

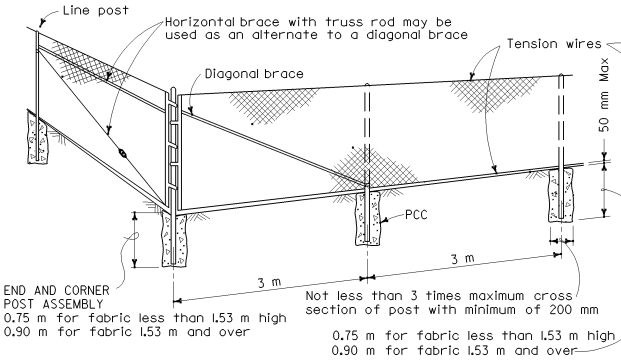

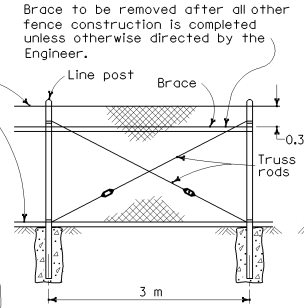

Line posts at 300 m maximum intervals braced and trussed in both directions except that this bracing and trussing may be omitted when the fabric is stretched by the equipment

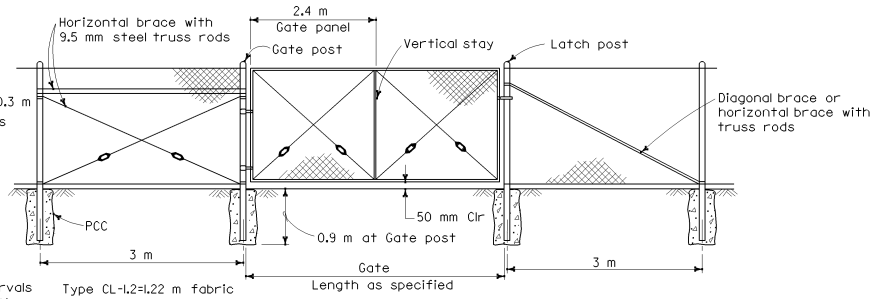

Type CL-1.2=1.22 m fabric
Type CL-1.8=1.83 m fabric

GATE POST			
FENCE HEIGHT	GATE WIDTHS (m)	NOMINAL ID (mm)	MASS PER METER (kg)
1.83 m and Less	Up thru 1.83	65	7.37
	Over 1.83 thru 3.66	100	16.06
	Over 3.66 thru 5.49	125	21.76
	Over 5.49 to 7.32 max	150	28.23
Over 1.83 m	Up thru 1.83	80	11.28
	Over 1.83 thru 3.66	125	21.76
	Over 3.66 thru 5.49	150	28.23
	Over 5.49 to 7.32 max	200	42.49

Above post dimensions and masses are minimums. Larger sizes may be used on approval of the Engineer.

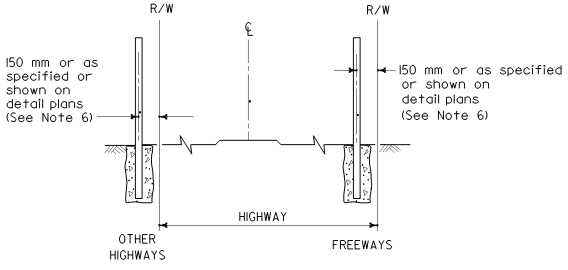

FENCE LOCATION

TYPICAL MEMBER DIMENSIONS (See Notes)										
FENCE HEIGHT	LINE POSTS			END, LATCH & CORNER POSTS			BRACES			
	ROUND ID	H	ROLL FORMED	ROUND ID	ROLL FORMED		ROUND ID	H	ROLL FORMED	
1.83 m & less	40	48 x 41	48 x 41	50	89 x 89	51 x 44	32	38 x 33	41 x 32	44 x 32
Over 1.83 m	50	57 x 51	51 x 44	63	89 x 89	63 x 63	32	38 x 33	41 x 32	44 x 32

NOTES

1. The above table shows examples of post and brace sections which may comply with the Specifications.
2. Sections shown in the tables must also comply with the strength requirements and other provisions of the Specifications.
3. Other sections which comply with the strength requirements and other provisions of the Specifications may be used on approval of the Engineer.
4. Options exercised shall be uniform on any one project.
5. Dimensions shown are nominal.
6. Offset to be 0.60 m at monument locations, measured at right angles to R/W lines. Taper to achieve offset to be at least 6 m long.

STATE OF CALIFORNIA
DEPARTMENT OF TRANSPORTATION

CHAIN LINK FENCE

NO SCALE

ALL DIMENSIONS ARE IN MILLIMETERS UNLESS OTHERWISE SHOWN

A85

03-26-04

2004 Std PLAN A85

Back to Table of Contents

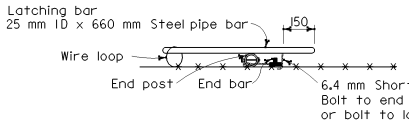

LATCHING DEVICE FOR GATEWAYS

See Note 1

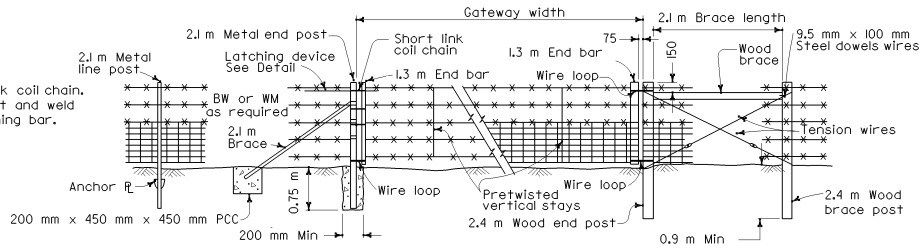

METAL POST INSTALLATION

WOOD POST INSTALLATION

GATEWAY

See Note 3

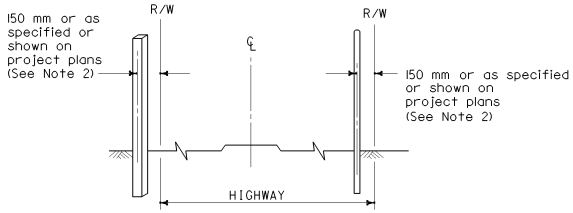

OTHER HIGHWAYS

FREEWAYS

FENCE LOCATION

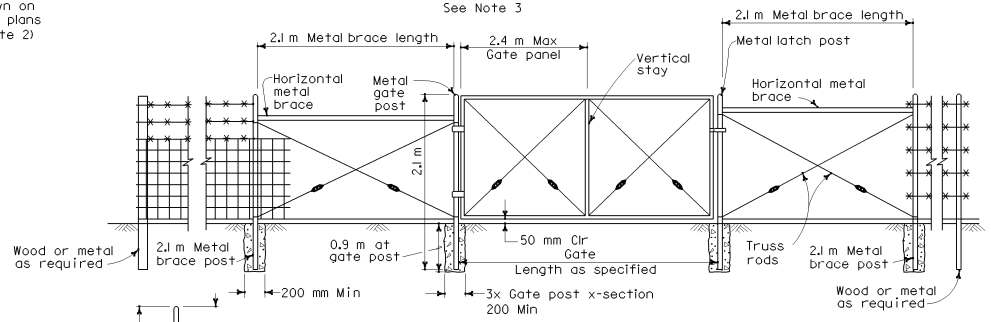

WIRE MESH GATE INSTALLATION FOR EITHER WOOD OR METAL POST FENCES

WIRE MESH GATE POST (See Note 4)		
GATE WIDTHS (m)	NOMINAL ID (mm)	MASS PER METER (kg)
Up thru 1.83	65	7.37
Over 1.83 thru 3.66	90	13.56
Over 3.66 thru 5.49	125	21.76
Over 5.49 to 7.32 max	150	28.23

NOTES

1. Metal end post and end bar shown. Use wood end post and end bar for wood post installation.
2. Offset to be 0.6 m at monument locations, measured at right angles to R/W lines. Taper to achieve offset to be at least 6 m long.
3. Gateway to be used when specified in the special provisions.
4. Post dimensions and masses are minimums. Larger sizes may be used on approval of the Engineer.
5. Line post spacing for wood post equals 3.7 m maximum. Line post spacing for metal post equals 3 m maximum.

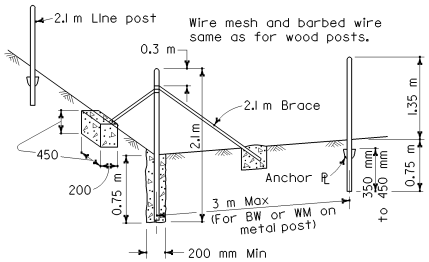

END AND CORNER POST ASSEMBLY

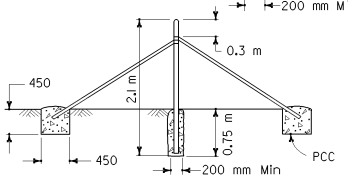

PULL POST ASSEMBLY

At 200 m maximum intervals for WM fence.
At 400 m maximum intervals for BW fence.

METAL POST INSTALLATION

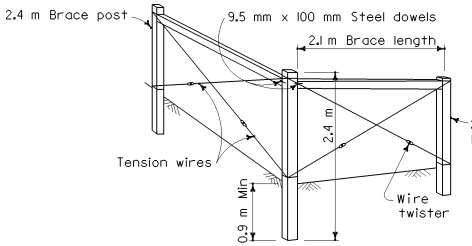

END AND CORNER POST ASSEMBLY

Type BW = 5 lines of barbed wire.
Type WM = Wire mesh and 3 lines of barbed wire.

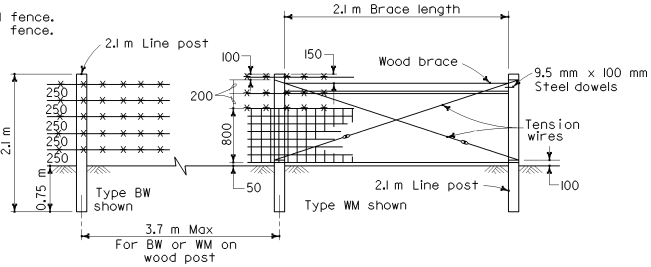

PULL POST ASSEMBLY

At 200 m maximum intervals for WM fence.
At 400 m maximum intervals for BW fence.

WOOD POST INSTALLATION

Caltrans Metric

DIST	COUNTY	ROUTE	KILOMETER POST TOTAL PROJECT	SHEET NO.	TOTAL SHEETS

REGISTERED CIVIL ENGINEER

July 1, 2004
PLANS APPROVAL DATE

REGISTERED PROFESSIONAL ENGINEER Glenn DeCou No. C34547 Exp. 9-30-05 CIVIL STATE OF CALIFORNIA

The State of California or its officers or agents shall not be responsible for the accuracy or completeness of electronic copies of this plan sheet.

To get to the Caltrans web site, go to: http://www.dot.ca.gov

STATE OF CALIFORNIA
DEPARTMENT OF TRANSPORTATION

BARBED WIRE AND WIRE MESH FENCES

NO SCALE

ALL DIMENSIONS ARE IN MILLIMETERS UNLESS OTHERWISE SHOWN

A86

03-26-04

Back to Table of Contents

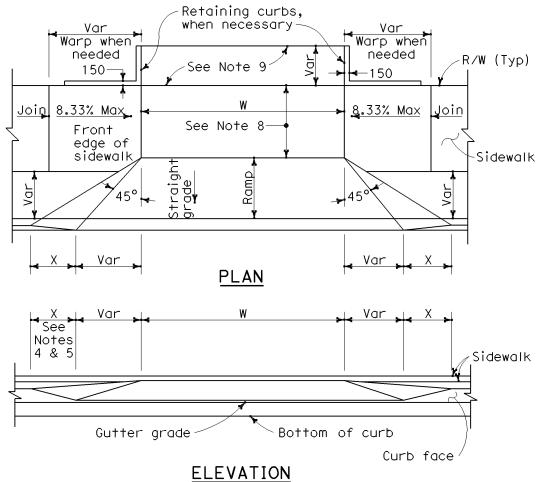

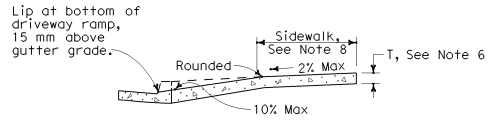

CASE A

Typical driveway, sidewalk not depressed

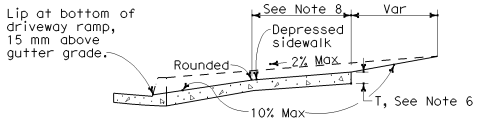

CASE B

Driveway with depressed sidewalk

SECTIONS

DRIVEWAYS

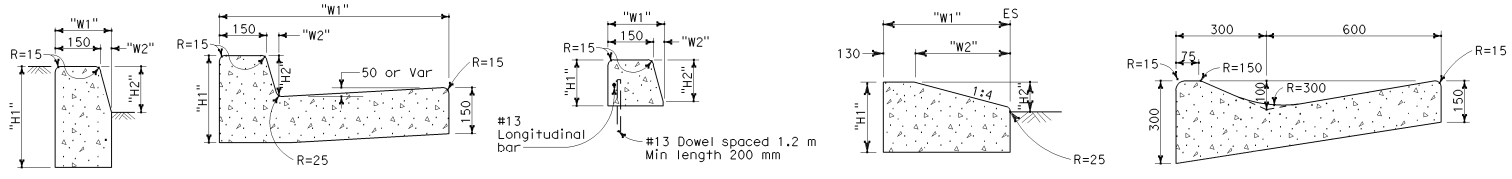

TYPE A1 CURBS — See Table A

TYPE A2 CURBS — See Table A

TYPE A3 CURBS — Superimposed on existing pavement, See Table A

TYPE D CURBS — See Table A

TYPE E CURB

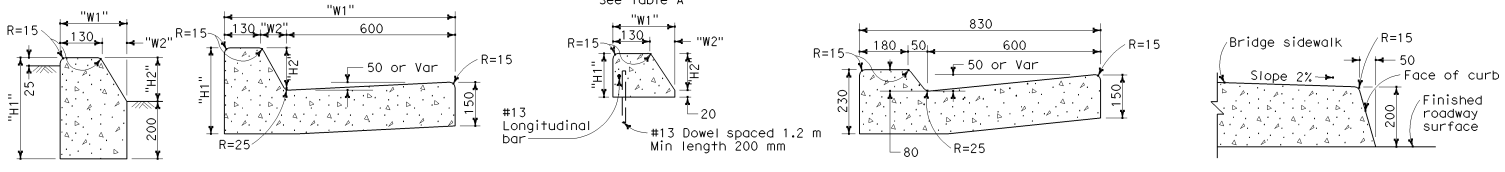

TYPE B1 CURBS — See Table A

TYPE B2 CURBS — See Table A

TYPE B3 CURBS — Superimposed on existing pavement, See Table A

TYPE B4 CURBS

TYPE H CURB — On Bridges

CURBS

CURB QUANTITIES

TYPE	CUBIC METERS PER METER
A1-150	0.064
A1-200	0.075
A2-150	0.144
A2-200	0.155
A3-150	0.025
A3-200	0.035
B1-100	0.056
B1-150	0.073
B2-100	0.137
B2-150	0.152
B3-100	0.017
B3-150	0.027
B4	0.142
D-100	0.100
D-150	0.162
E	0.161

TABLE A

CURB TYPE	DIMENSIONS "H1"	"H2"	"W1"	"W2"
A1-150	350	150	190	40
A1-200	400	200	200	50
A2-150	300	150	790	40
A2-200	350	200	800	50
A3-150	150	130	185	35
A3-200	200	180	198	48
B1-100	300	100	200	70
B1-150	350	150	230	100
B2-100	250	100	800	70
B2-150	300	150	830	100
B3-100	100	80	185	55
B3-150	150	130	217	87
D-100	250	100	452	322
D-150	300	150	652	522

Caltrans Metric

DIST	COUNTY	ROUTE	KILOMETER POST TOTAL PROJECT	SHEET NO.	TOTAL SHEETS

REGISTERED CIVIL ENGINEER

July 1, 2004
PLANS APPROVAL DATE

REGISTERED PROFESSIONAL ENGINEER Michael Janzen No. 44788 Exp. 03-31-06 CIVIL STATE OF CALIFORNIA

The State of California or its officers or agents shall not be responsible for the accuracy or completeness of electronic copies of this plan sheet.

To get to the Caltrans web site, go to: http://www.dot.ca.gov

NOTES

1. Case A driveway section typically applies.
2. Use Case B driveway section when ramp slopes would exceed 10% in Case A.
3. Use Case B driveway section when sidewalk cross slope would exceed 2% in Case A.
4. X=900 mm except for curb heights over 250 mm where 1:4 slopes shall be used on curb slope.
5. X is a variable when sidewalk is located where wheelchairs may traverse the surface. Slopes shall not exceed 8.33%.
6. Sidewalk and ramp thickness ``T'' at driveway shall be 100 mm for residental and 150 mm for commercial.
7. Difference in slope of the driveway ramp and the slope of a line between the gutter and a point on the roadway 1.5 meters from gutter line shall not exceed 15%. Reduce driveway ramp slope, not gutter slope, where required.
8. Minimum width of clear passageway for sidewalk shall be 1.22 meters. Where right of way restrictions, natural barriers or other existing conditions create an unreasonable hardship, the clear passageway width may be reduced to 915 mm
9. Retaining curbs and acquisition of construction easement may be necessary for narrow sidewalks or curb heights in excess of 150 mm.

STATE OF CALIFORNIA
DEPARTMENT OF TRANSPORTATION

CURBS AND DRIVEWAYS

NO SCALE

ALL DIMENSIONS ARE IN MILLIMETERS UNLESS OTHERWISE SHOWN

A87A

05-04-04

Back to Table of Contents

DIST	COUNTY	ROUTE	KILOMETER POST TOTAL PROJECT	SHEET NO.	TOTAL SHEETS

Caltrans Metric

REGISTERED CIVIL ENGINEER

July 1, 2004
PLANS APPROVAL DATE

REGISTERED PROFESSIONAL ENGINEER Michael Janzen No. 44788 Exp. 03-31-06 CIVIL STATE OF CALIFORNIA

The State of California or its officers or agents shall not be responsible for the accuracy or completeness of electronic copies of this plan sheet.

To get to the Caltrans web site, go to: http://www.dot.ca.gov

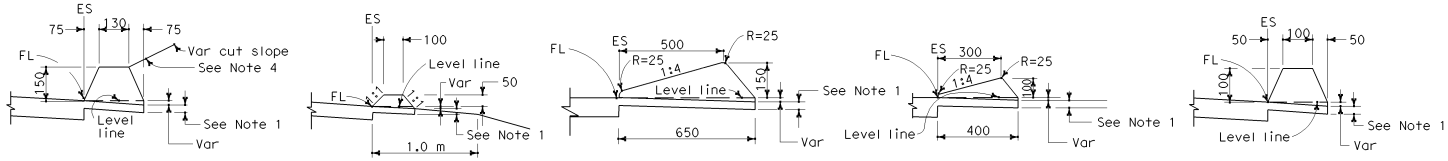

TYPE A
See Note 3

TYPE C

TYPE D

TYPE E

TYPE F
See Note 5

DIKES

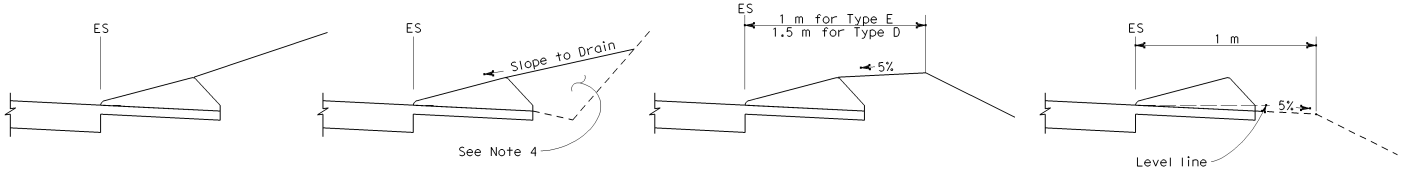

CASE C-1
Cut Slope

CASE C-2
Cut Slope

CASE F

CASE R
See Note 2

TYPE D AND E BACKFILL DETAILS

NOTES

1. For AC shoulders only, extend top layer of AC placed on the shoulder under dike with no joint at the ES.
2. Case R applies to retrofit only projects where restrictive conditions do not provide enough width for Case F backfill.
3. Type A dike only to be used where restrictive slope conditions do not provide enough width to use Type D or Type E dike.
4. Fill and compact with excavated material to top of dike.
5. Use Type F dike, where dike is required with guard railing installations. See Standard Plan A77F for dike positioning details.
6. Type B dike deleted.

DIKE QUANTITIES

TYPE	CUBIC METERS PER METER
A	0.033
C	0.009
D	0.065
E	0.027
F	0.016

Quantities based on 5% cross slope.

STATE OF CALIFORNIA
DEPARTMENT OF TRANSPORTATION

ASPHALT CONCRETE DIKES

NO SCALE

ALL DIMENSIONS ARE IN MILLIMETERS UNLESS OTHERWISE SHOWN

A87B

05-04-04

2004 Std PLAN A87B

Back to Table of Contents

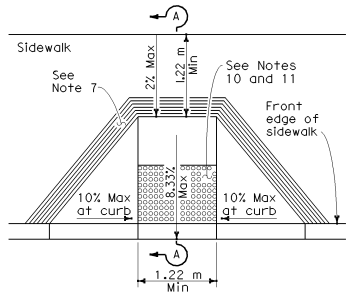

CASE A

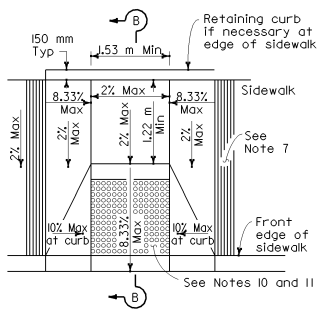

CASE B

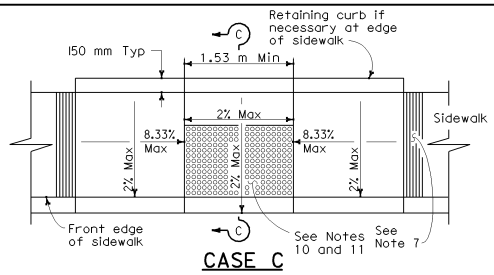

CASE C

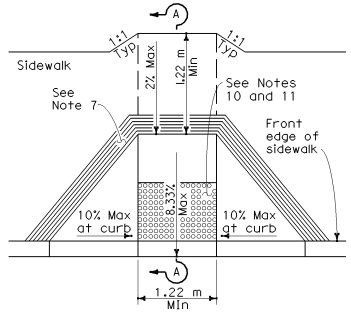

CASE D

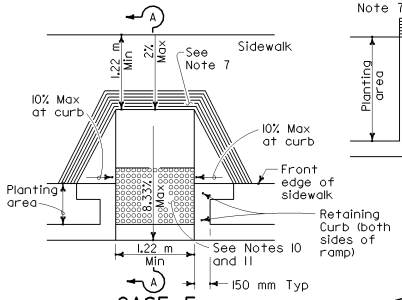

CASE E

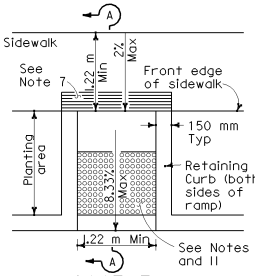

CASE F

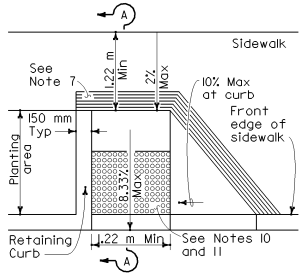

CASE G

See Note 4

GROOVING DETAIL

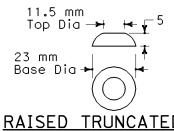

RAISED TRUNCATED DOME

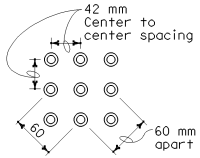

RAISED TRUNCATED DOME PATTERN (IN-LINE)

DETECTABLE WARNING SURFACE

See Note 10

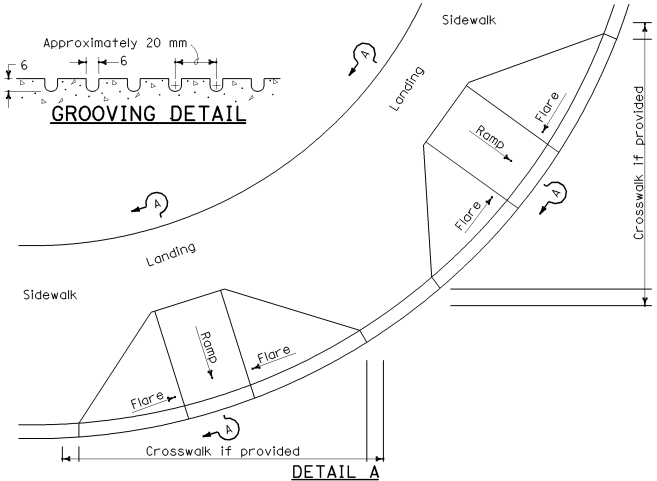

DETAIL A

TYPICAL TWO-RAMP CORNER INSTALLATION

See Note 1

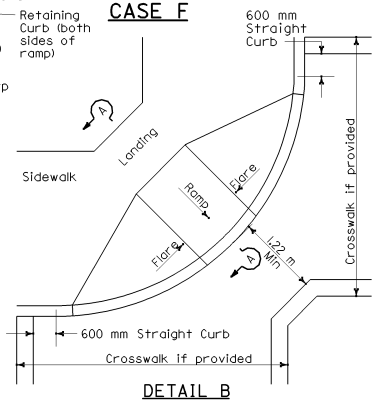

DETAIL B

TYPICAL ONE-RAMP CORNER INSTALLATION

See Notes 1 and 3

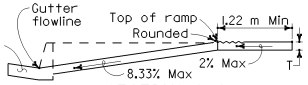

SECTION A-A

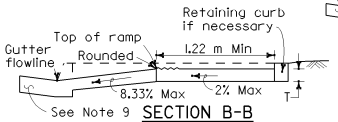

SECTION B-B

Depress entire sidewalk as required

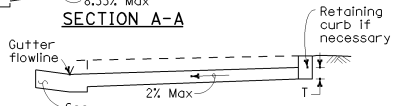

SECTION C-C

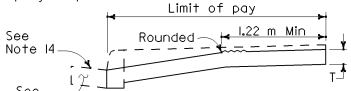

RETROFIT DETAIL

Existing curb and sidewalk

Caltrans Metric

DIST	COUNTY	ROUTE	KILOMETER POST TOTAL PROJECT	SHEET NO.	TOTAL SHEETS

REGISTERED CIVIL ENGINEER

July 1, 2004

PLANS APPROVAL DATE

REGISTERED PROFESSIONAL ENGINEER Hector David Cordova No. C41957 Exp. 3-31-06 CIVIL STATE OF CALIFORNIA

The State of California or its officers or agents shall not be responsible for the accuracy or completeness of electronic copies of this plan sheet.

To get to the Caltrans web site, go to: http://www.dot.ca.gov

NOTES

1. As site conditions dictate, Case A through Case G curb ramps may be used for corner installations similar to those shown in Detail A and Detail B. The case of curb ramps used in Detail A do not have to be the same. Case A through Case G curb ramps also may be used at mid block locations, as site conditions dictate.
2. If distance from curb to back of sidewalk is too short to accommodate ramp and 1.22 m platform (landing) as shown in Case A, the sidewalk may be depressed longitudinally as in Case B, or C or may be widened as in Case D.
3. When ramp is located in center of curb return, crosswalk configuration must be similar to that shown for Detail B.
4. As site conditions dictate, the retaining curb side and the flared side of the Case G ramp shall be constructed in reversed position.
5. If located on a curve, the sides of the ramp need not be parallel, but the minimum width of the ramp shall be 1.22 m.
6. Side slope of ramp flares vary uniformly from a maximum of 10% at curb to conform with longitudinal sidewalk slope adjacent to top of the ramp, except in Case C and Case F.
7. The curb ramp shall be outlined, as shown, with a 300 mm wide border with 6 mm grooves approximately 20 mm on center. See grooving detail.
8. Transitions from ramps to walks, gutters or streets shall be flush and free of abrupt changes.
9. Maximum slopes of adjoining gutters, the road surface immediately adjacent to the curb ramp and continuous passage to the curb ramp shall not exceed 5 percent within 1.22 m of the top or bottom of the curb ramp.
10. Curb ramps shall have a detectable warning surface that extends the full width and 914 mm depth of the ramp. Detectable Warning Surfaces shall conform to the details on this plan and the requirements in the Special Provisions.
11. The edge of the detectable warning surface nearest the street shall be between 150 mm and 205 mm from the gutter flowline.
12. Sidewalk and ramp thickness, "T", shall be 90 mm minimum.
13. Utility pull boxes, manholes, vaults and all other utility facilities within the boundaries of the curb ramp will be relocated or adjusted to grade by the owner prior to, or in conjunction with, curb ramp construction.
14. For retrofit conditions, removal and replacement of curb apron will be at the Contractor's option, unless otherwise shown on project plans.

STATE OF CALIFORNIA
DEPARTMENT OF TRANSPORTATION

CURB RAMP DETAILS

NO SCALE

ALL DIMENSIONS ARE IN MILLIMETERS UNLESS OTHERWISE SHOWN

A88A

08-05-04

Back to Table of Contents

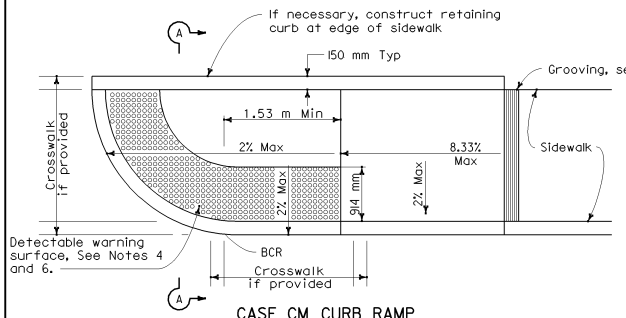

CASE CM CURB RAMP

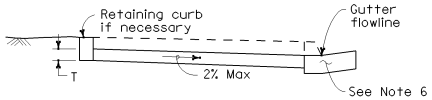

SECTION A-A

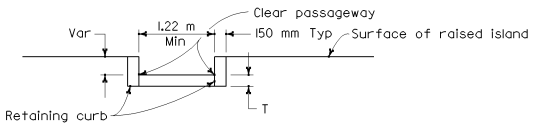

SECTION B-B

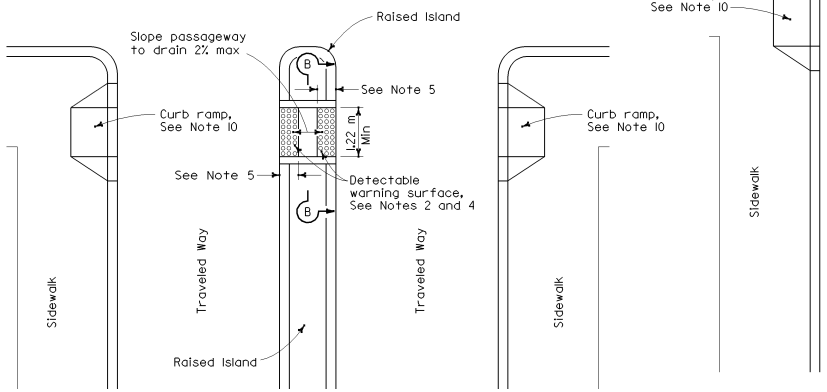

TYPE A PASSAGEWAY

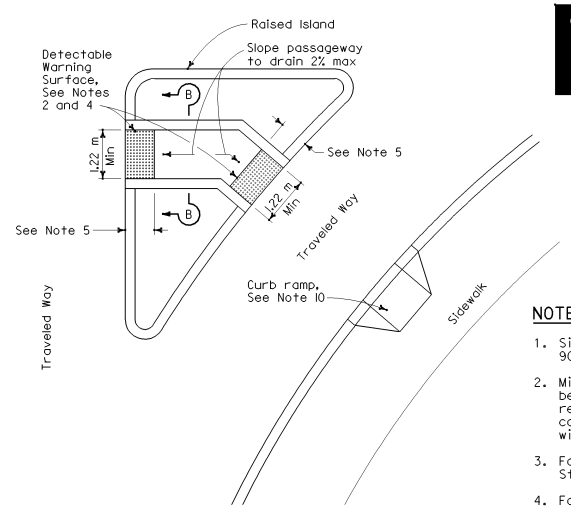

TYPE B PASSAGEWAY

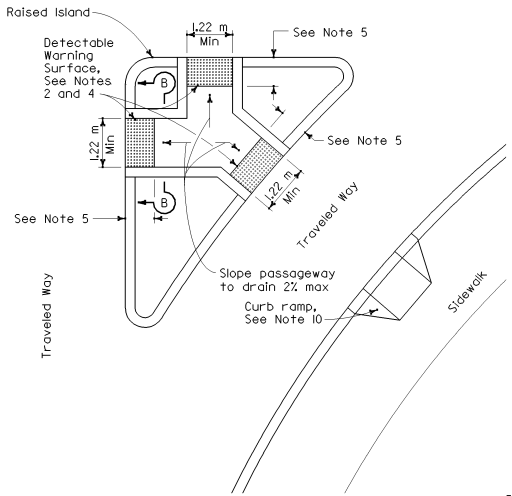

TYPE C PASSAGEWAY

Caltrans Metric

DIST	COUNTY	ROUTE	KILOMETER POST TOTAL PROJECT	SHEET NO.	TOTAL SHEETS

REGISTERED CIVIL ENGINEER

July 1, 2004
PLANS APPROVAL DATE

REGISTERED PROFESSIONAL ENGINEER Hector David Cordova No. C41957 Exp. 3-31-06 CIVIL STATE OF CALIFORNIA

The State of California or its officers or agents shall not be responsible for the accuracy or completeness of electronic copies of this plan sheet.

To get to the Caltrans web site, go to: http://www.dot.ca.gov

NOTES

1. Sidewalk, ramp and passageway thickness, ``T'', shall be 90 mm minimum.
2. Minimum width of passageway through raised islands shall be 1.22 m, except for locations where right of way restrictions, natural barriers, or other existing conditions create an unreasonable hardship, the clear width of the passageway may be reduced to 915 mm.
3. For details of grooving used with Case CM curb ramp, see Standard Plan A88A.
4. For details of detectable warning surfaces, see Standard Plan A88A.
5. Where an island passage way length is less than 1.8 m, the detectable waring surface shall extend the full width and full depth of the passage way length. Where an island passage way length is greater than or equal to 1.8 m, but less than 2.44 m, a detectable warning surface shall extend the full width and 600 mm depth of the passage way length. Where an island passage way length is greater than or equal to 2.44 m, a detectable warning surface shall extend the full width and 914 mm depth of the passage way length.
6. For Case CM curb ramp, the edge of the detectable warning surface nearest the street shall be between 150 mm and 205 mm from the gutter flowline.
7. Transitions from ramps to walks, gutters or streets shall be flush and free of abrupt changes
8. Maximum slopes of adjoining gutters, the road surface immediately adjacent to the curb ramp and continous passage to the curb ramp shall not exceed 5 percent within 1.22 m of the top or bottom of the curb ramp.
9. Utility pull boxes, manholes, vaults and all other utility facilities within the boundaries of the curb ramp will be relocated or adjusted to grade by the owner prior to, or in conjunction with, curb ramp construction.
10. For additional curb ramp details, see Standard Plan A88A.

STATE OF CALIFORNIA
DEPARTMENT OF TRANSPORTATION

CURB RAMP AND ISLAND PASSAGEWAY DETAILS

NO SCALE

ALL DIMENSIONS ARE IN MILLIMETERS UNLESS OTHERWISE SHOWN

A88B

07-06-04

Back to Table of Contents

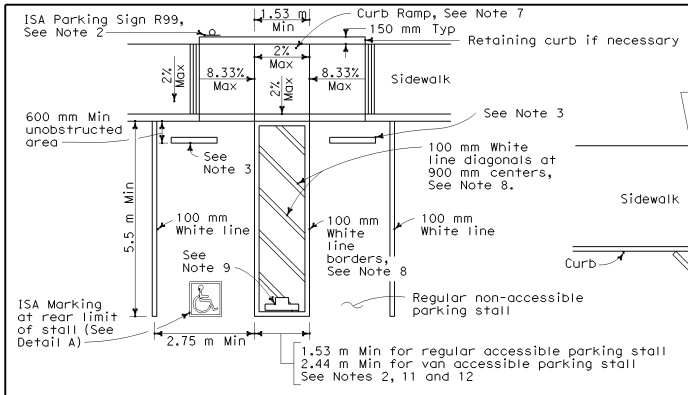

SINGLE PARKING STALL

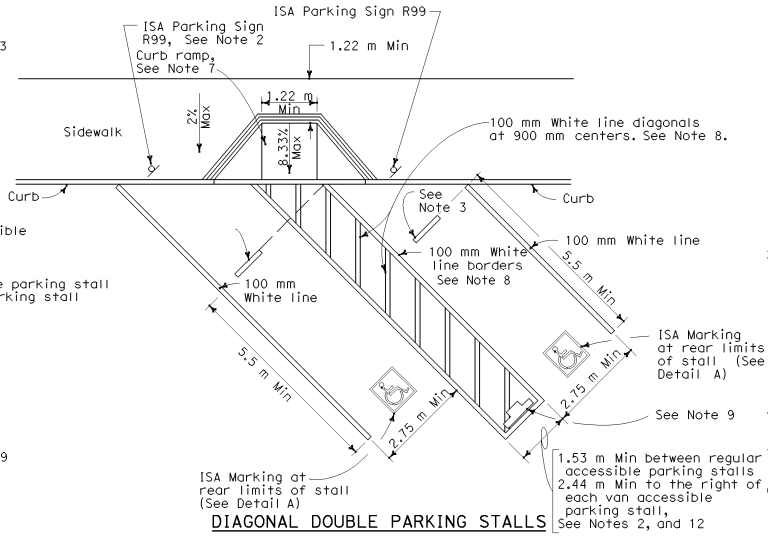

DIAGONAL DOUBLE PARKING STALLS

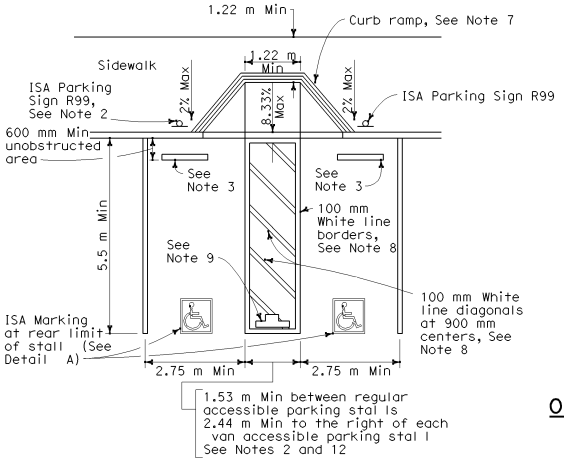

DOUBLE PARKING STALL

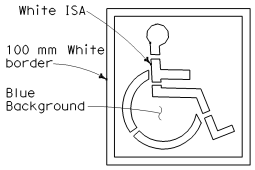

ISA MARKING FOR ACCESSIBLE PARKING SPACE OR STALL (See Std. Plan A24C)

DETAIL A

NOTES

1. Accessible parking spaces serving a particular building shall be located on the shortest accessible route of travel from adjacent parking to an accessible entrance. In parking facilities that do not serve a particular building, accessible parking shall be located on the shortest accessible route of travel to an accessible pedestrian entrance of the parking facility.
2. One in every eight accessible off-street parking stalls, but not less than one, shall be served by an accessible aisle of 2.44 m minimum width and shall be signed van accessible. The R99A "Van Accessible" sign shall be mounted below the R99 "ISA Parking" sign.
3. In each parking stall, a curb or bumper shall be provided and located to prevent encroachment of vehicles over the required width of walkways. Parking stalls shall be so located that persons with disabilities are not compelled to wheel or walk behind parked cars other than their own.
4. Surface slopes of accessible off-street parking stalls shall be the minimum possible and shall not exceed 2 percent in any direction.
5. Table A shall be used to determine the required number of accessible parking stalls in any parking lot or garage.
6. Where R99 "ISA Parking" or R99A "Van Accessible" signs are installed on sidewalks or other paths of travel, the bottom of the sign panel shall be a minimum of 2.04 m above the surface of the sidewalk or path.
7. Curb ramps shall conform to the details shown on Standard Plan A88A. Except that the detectable warning surface shall only apply where the curb ramp is provided for a pedestrian to cross a vehicular way.
8. Blue paint, instead of white may be used for marking accessibility aisles in areas where snow may cause white markings to not be visible.
9. The words "NO PARKING", shall be painted in white letters no less than 300 mm high and located so that it is visible to traffic enforcement officials. See Standard Plan A90B for details of the "NO PARKING" pavement marking.
10. A R100B sign shall be posted in a conspicuous place at each entrance to off-street parking facilities or immediately adjacent to and visible from each stall. The sign shall include the address where the towed vehicle may be reclaimed at the telephone number of the local traffic law enforcement agency.
11. Where a single (non-van) accessible parking space is provided, the loading and unloading access aisle shall be on the passenger side of the vehicle as the vehicle is going forward into the parking space.
12. Where a van accessible parking space is provided, the loading and unloading access aisle shall be 2.44 m wide minimum, and shall only be on the passenger side of the vehicle as the vehicle is going forward into the parking space.

OFF-STREET PARKING

(Parking lot or garage)
See Note 6

TABLE A

Total Number of Parking Spaces or Stalls	Minimum Number of Disabled Accessible Parking Spaces or Stalls
1-25	1
26-50	2
51-75	3
76-100	4
101-150	5
151-200	6
201-300	7
301-400	8
401-500	9
501-1000	2 percent of total
Greater than 1001	20 plus 1 for each 100 or fraction thereof over 1001

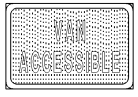

VAN ACCESSIBLE SIGN (R99A)
Standard 300 mm x 200 mm
See Notes 2 and 6

ISA PARKING SIGN (R99)
Standard 300 mm x 450 mm
See Note 6

SIGN (R100B)
Standard 450 mm x 600 mm
See Note 10

ISA = International Symbol of Accessibility

Caltrans Metric

DIST	COUNTY	ROUTE	KILOMETER POST TOTAL PROJECT	SHEET NO.	TOTAL SHEETS

REGISTERED CIVIL ENGINEER

July 1, 2004
PLANS APPROVAL DATE

REGISTERED PROFESSIONAL ENGINEER Hector David Cordova No. C41957 Exp. 3-31-06 CIVIL STATE OF CALIFORNIA

The State of California or its officers or agents shall not be responsible for the accuracy or completeness of electronic copies of this plan sheet.

To get to the Caltrans web site, go to: http://www.dot.ca.gov

STATE OF CALIFORNIA
DEPARTMENT OF TRANSPORTATION

ACCESSIBLE PARKING OFF-STREET

NO SCALE

ALL DIMENSIONS ARE IN MILLIMETERS UNLESS OTHERWISE SHOWN

A90A

07-06-04

Back to Table of Contents

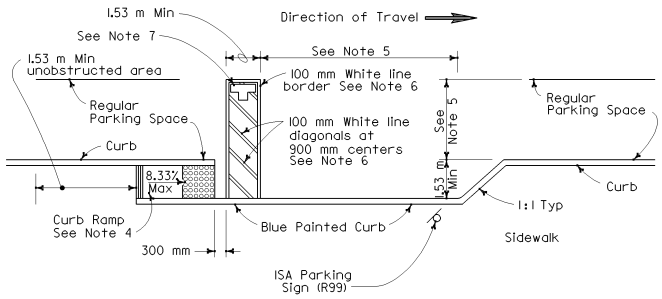

SINGLE PARKING SPACE

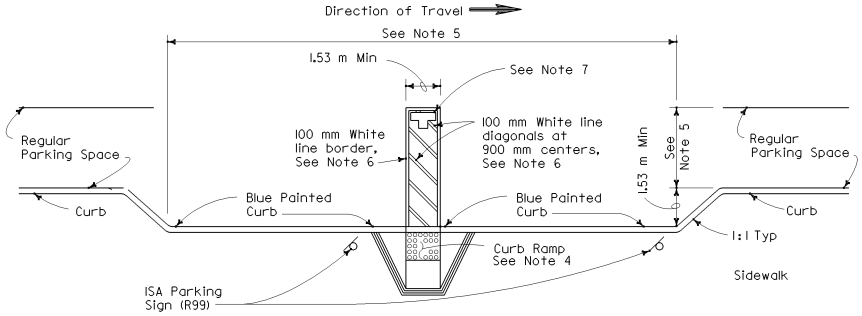

DOUBLE PARKING SPACE

ON-STREET PARKING

(Parallel parking)

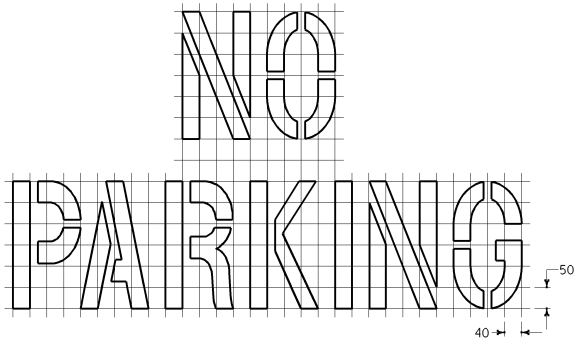

PAVEMENT MARKING DETAIL

See Note 7

ISA PARKING SIGN (R99)
Standard 300 mm x 450 mm
See Note 3

ISA = International Symbol of Accessibility

Caltrans Metric

DIST	COUNTY	ROUTE	KILOMETER POST TOTAL PROJECT	SHEET NO.	TOTAL SHEETS

REGISTERED CIVIL ENGINEER

July 1, 2004
PLANS APPROVAL DATE

REGISTERED PROFESSIONAL ENGINEER
Hector David Cordova
No. C41957
Exp. 3-31-06
CIVIL
STATE OF CALIFORNIA

The State of California or its officers or agents shall not be responsible for the accuracy or completeness of electronic copies of this plan sheet.

To get to the Caltrans web site, go to: http://www.dot.ca.gov

NOTES

1. Parking spaces shall be so located that persons with disabilities are not compelled to wheel or walk behind parked cars other than their own.
2. Surface slopes of accessible on-street parking spaces shall be the minimum feasible.
3. Where R99 "ISA Parking Signs" are installed on sidewalks or other paths of travel, the bottom of the sign panel shall be a minimum of 2.04 m above the surface of the sidewalk or path.
4. Curb ramps shall conform to the details shown on Standard Plan A88A.
5. Accessible on-street parking spaces shall not be smaller in length or width than that specified by the local jurisdiction for other parking spaces.
6. Blue paint, instead of white may be used for marking accessibility aisles in areas where snow may cause white markings to not be visible.
7. The words "NO PARKING", shall be painted in white letters no less than 300 mm high on a contrasting background and located so that it is visible to traffic enforcement officials. See Standard Plan A24E for square meter area for painting the words "NO PARKING".

STATE OF CALIFORNIA
DEPARTMENT OF TRANSPORTATION

ACCESSIBLE PARKING ON-STREET

NO SCALE

ALL DIMENSIONS ARE IN MILLIMETERS UNLESS OTHERWISE SHOWN

A90B

2004 Std PLAN A90B

08-13-04

Back to Table of Contents

DIST	COUNTY	ROUTE	KILOMETER POST TOTAL PROJECT	SHEET NO.	TOTAL SHEETS

Caltrans Metric

William K. Fornbach
REGISTERED CIVIL ENGINEER

July 1, 2004
PLANS APPROVAL DATE

REGISTERED PROFESSIONAL ENGINEER William K. Fornbach No. 49042 Exp. 09-30-04 CIVIL STATE OF CALIFORNIA

The State of California or its officers or agents shall not be responsible for the accuracy or completeness of electronic copies of this plan sheet.

To get to the Caltrans web site, go to: http://www.dot.ca.gov

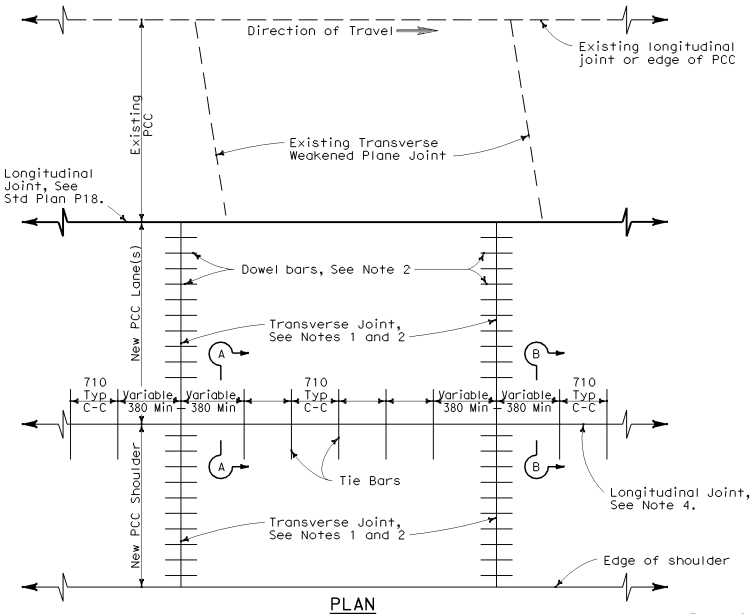

PLAN
LANE/SHOULDER ADDITION OR RECONSTRUCTION
See Notes 6 and 7

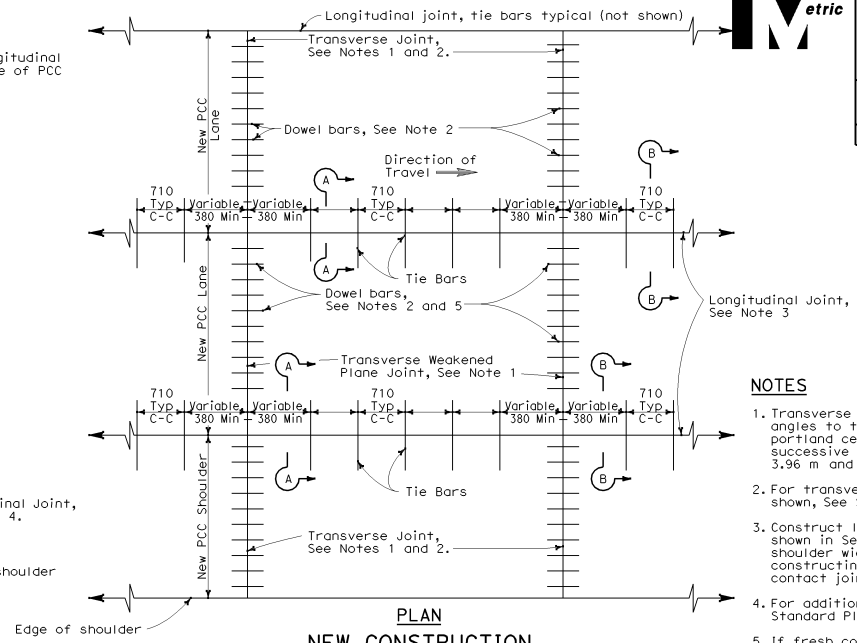

PLAN
NEW CONSTRUCTION
See Notes 6 and 7

NOTES

1. Transverse joints shall be constructed at right angles to the longitudinal pavement joints in new portland cement concrete pavement and spaced at successive repeated intervals of 3.66 m, 4.57 m, 3.96 m and 4.27 m.
2. For transverse joint and dowel bar details not shown, See Standard Plan P10.
3. Construct longitudinal weakened plane joints as shown in Section A-A when more than one lane or shoulder widths are placed at one time. If constructing one lane at a time, use longitudinal contact joint, as shown in Section B-B.
4. For additional longitudinal joint details, see Standard Plan P18.
5. If fresh concrete is placed adjacent to existing concrete, the top corner of the new hardened concrete does not need to be rounded to the 6 mm radius, as shown.
6. Standard Plan P1 does not apply to intersections.
7. Details can also apply to inside widening.

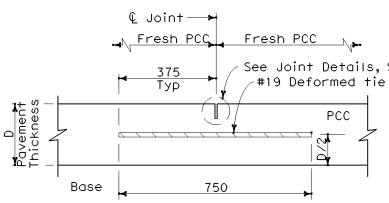

SECTION A-A
LONGITUDINAL WEAKENED PLANE JOINT

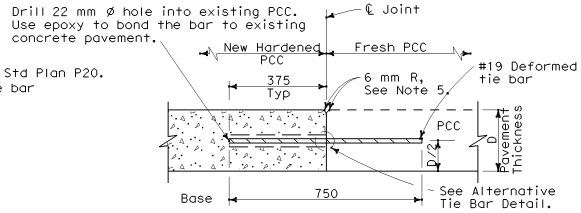

SECTION B-B
LONGITUDINAL CONTACT JOINT

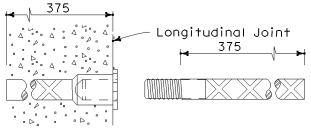

ALTERNATIVE TIE BAR DETAIL
(Dowel Splice Coupler)

TIE BAR DETAILS

STATE OF CALIFORNIA
DEPARTMENT OF TRANSPORTATION

JOINTED PLAIN CONCRETE PAVEMENT

NO SCALE

ALL DIMENSIONS ARE IN MILLIMETERS UNLESS OTHERWISE SHOWN

P1

05-06-04

Back to Table of Contents

DIST	COUNTY	ROUTE	KILOMETER POST TOTAL PROJECT	SHEET NO.	TOTAL SHEETS

Caltrans Metric

William K. Fornbach
REGISTERED CIVIL ENGINEER

July 1, 2004
PLANS APPROVAL DATE

REGISTERED PROFESSIONAL ENGINEER William K. Fornbach NO. 49042 Exp. 09-30-04 CIVIL STATE OF CALIFORNIA

The State of California or its officers or agents shall not be responsible for the accuracy or completeness of electronic copies of this plan sheet.

To get to the Caltrans web site, go to: http://www.dot.ca.gov

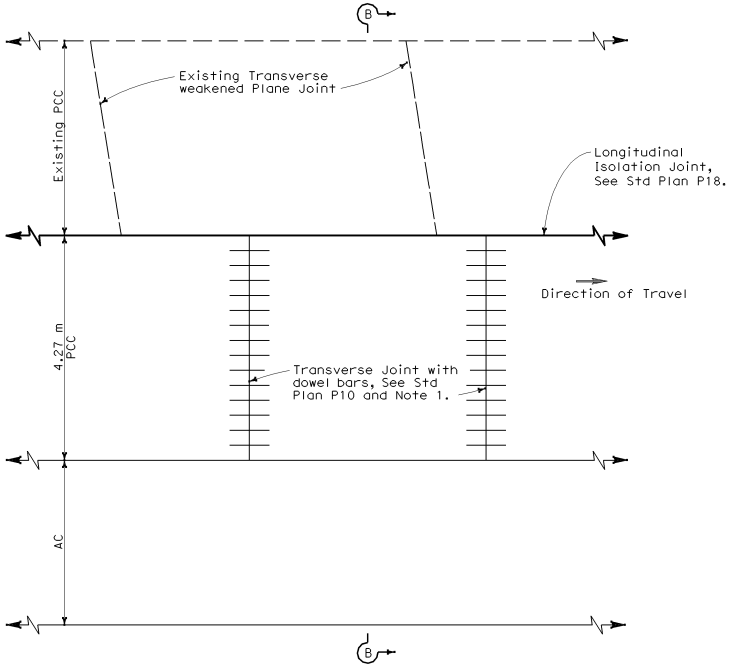

PLAN
LANE/SHOULDER ADDITION OR RECONSTRUCTION

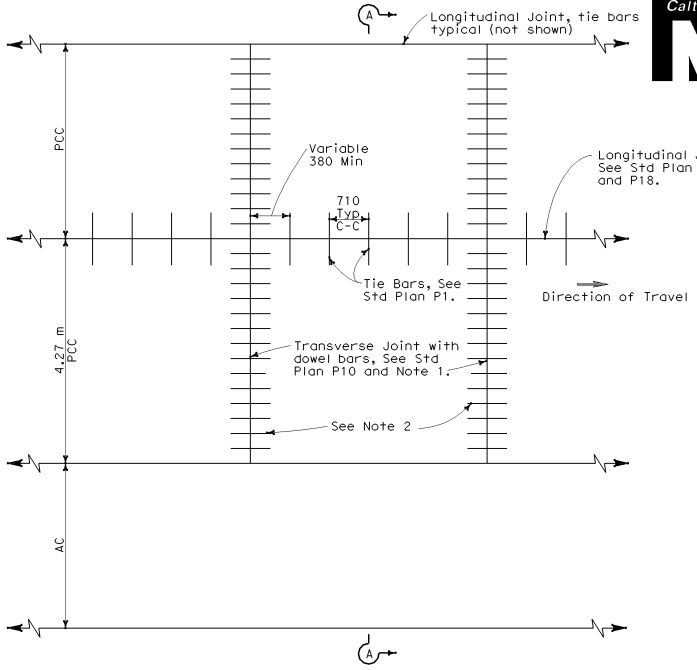

PLAN
NEW CONSTRUCTION

NOTES

1. Transverse joints shall be constructed at right angles to the longitudinal pavement joints in new PCC pavement and spaced at successive repeated intervals of 3.66 m, 4.57 m, 3.96 m and 4.27 m.
2. For locations of rumble strips, see project plans. For details not shown, see Standard Plans A40A and A40B.
3. Standard Plan P2 does not apply to intersections.

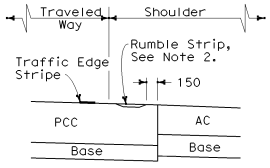

DETAIL "A"

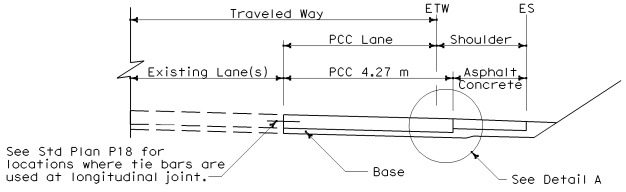

SECTION B-B

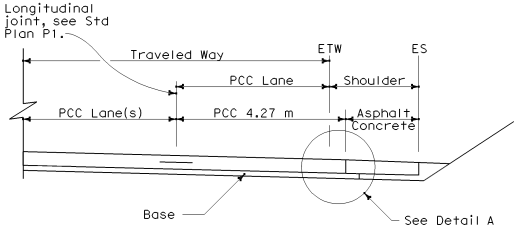

SECTION A-A

STATE OF CALIFORNIA
DEPARTMENT OF TRANSPORTATION

JOINTED PLAIN CONCRETE PAVEMENT-WIDE PANEL DETAILS

NO SCALE

ALL DIMENSIONS ARE IN MILLIMETERS UNLESS OTHERWISE SHOWN

P2

04-27-04

Back to Table of Contents

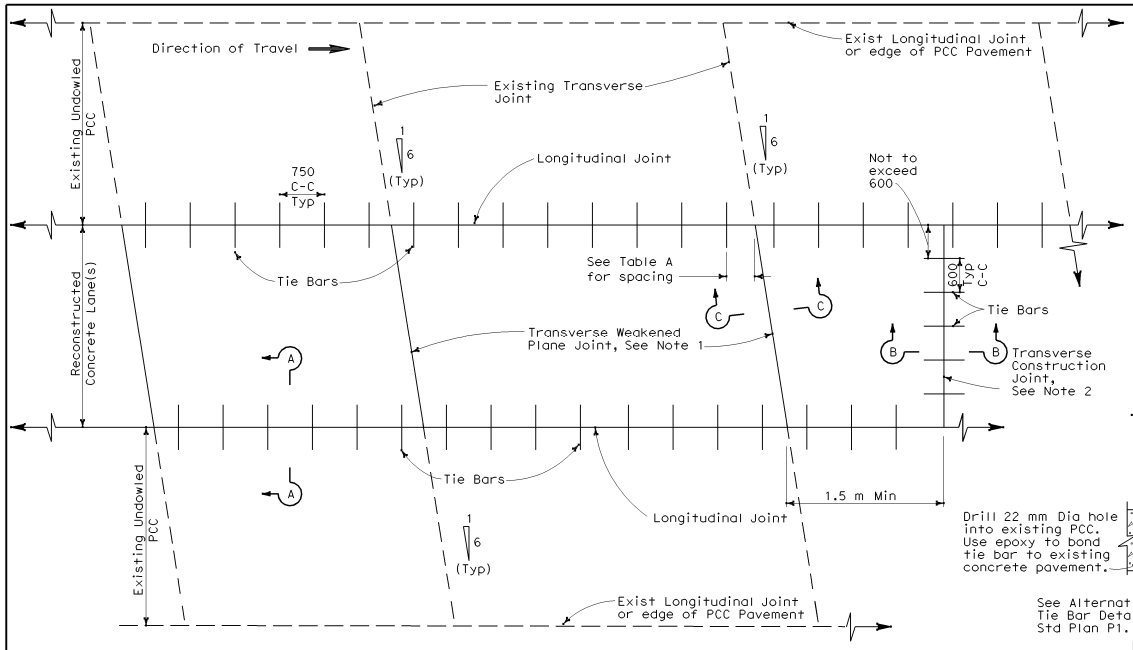

PLAN
LANE RECONSTRUCTION

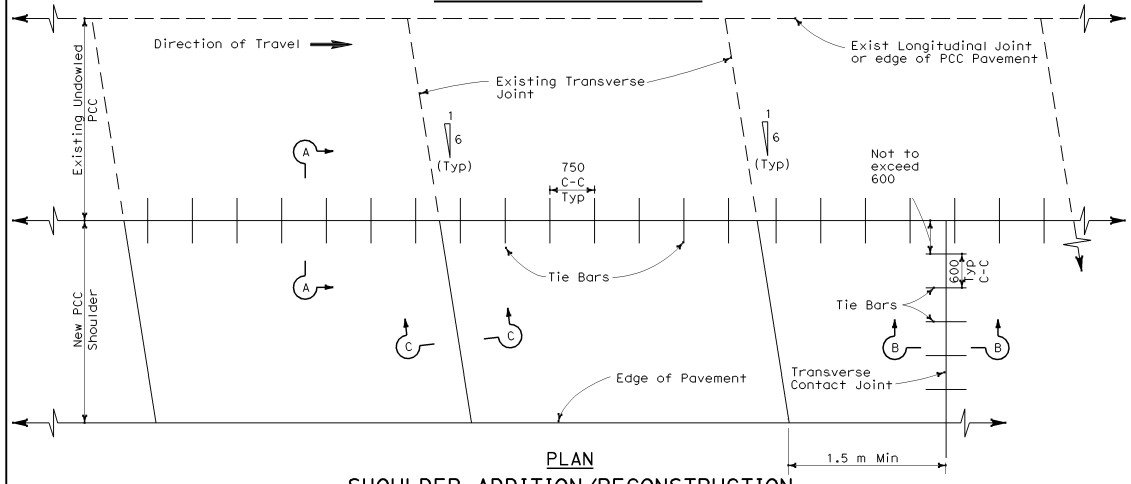

PLAN
SHOULDER ADDITION/RECONSTRUCTION

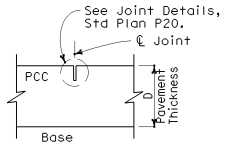

SECTION C-C
TRANSVERSE WEAKENED PLANE JOINT

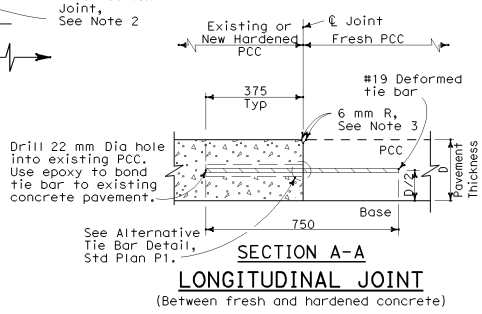

SECTION A-A
LONGITUDINAL JOINT
(Between fresh and hardened concrete)

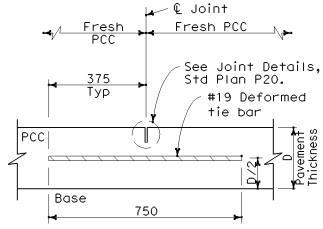

LONGITUDINAL JOINT
(In fresh concrete)

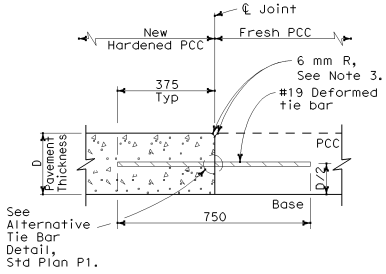

SECTION B-B
TRANSVERSE CONTACT JOINT

Caltrans Metric

DIST	COUNTY	ROUTE	KILOMETER POST TOTAL PROJECT	SHEET NO.	TOTAL SHEETS

REGISTERED CIVIL ENGINEER
July 1, 2004
PLANS APPROVAL DATE

REGISTERED PROFESSIONAL ENGINEER William K. Fornbach No. 49042 Exp. 09-30-04 CIVIL STATE OF CALIFORNIA

The State of California or its officers or agents shall not be responsible for the accuracy or completeness of electronic copies of this plan sheet.

To get to the Caltrans web site, go to: http://www.dot.ca.gov

NOTES

1. New transverse weakened plane joints shall match the skewed offset and spacing of the adjacent existing weakened plane joints, as shown. Where the existing transverse weakened plane joint spacing exceeds 4.57 m, an additional transverse weakened plane joint shall be constructed equal distance between the existing joints.
2. Transverse contact joints, with tie bars spaced as shown, shall be installed at the end of paving operations. Transverse contact joints shall be placed at least 1.5 m from any weakened plane joint.
3. If fresh portland cement concrete is placed adjacent to existing portland cement concrete, the top corner of the existing portland cement concrete does not need to be rounded to 6 mm radius, as shown.
4. Standard Plan P5 does not apply to intersections.

TABLE A

Tie Bar Spacing		
Panel Length (m)	Total Tie Bars per Panel	Clearance Tie Bar to Transverse Joint (mm)
3.66	5	400
4.57	6	500
3.96	5	550
4.27	5	705

STATE OF CALIFORNIA
DEPARTMENT OF TRANSPORTATION

UNDOWELED JOINTED PLAIN CONCRETE PAVEMENT

NO SCALE

ALL DIMENSIONS ARE IN MILLIMETERS UNLESS OTHERWISE SHOWN

P5

05-06-04

Back to Table of Contents

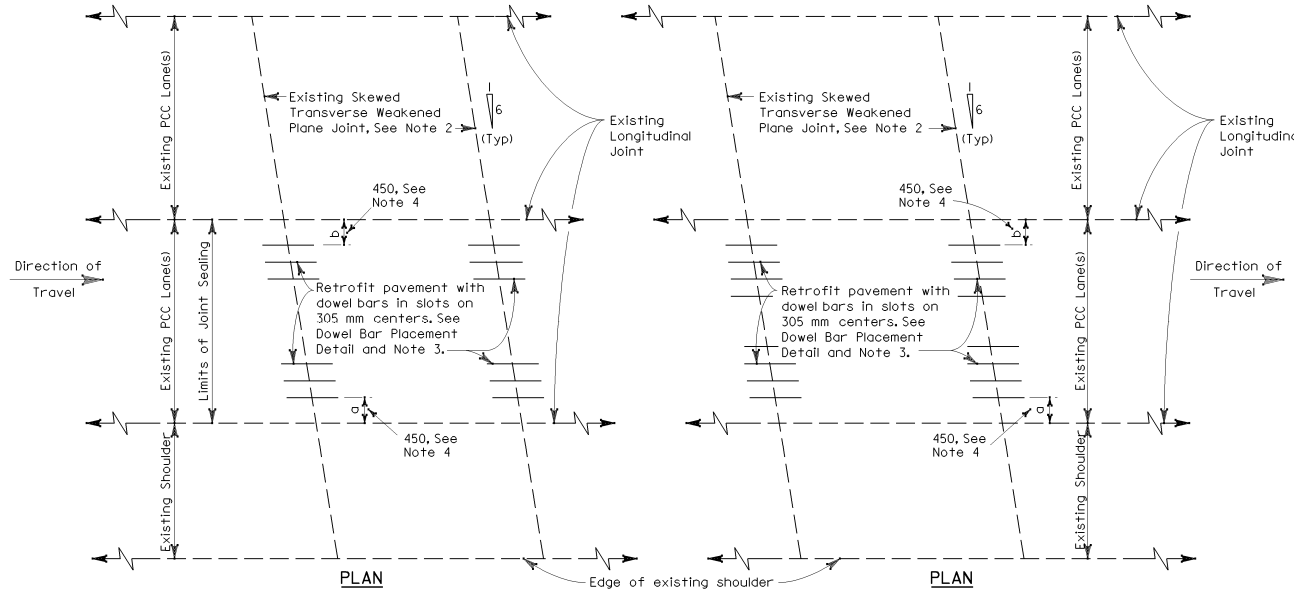

PLAN

3 DOWELS PER WHEEL PATH

See Notes 1 and 2

PLAN

4 DOWELS PER WHEEL PATH

See Notes 1 and 2

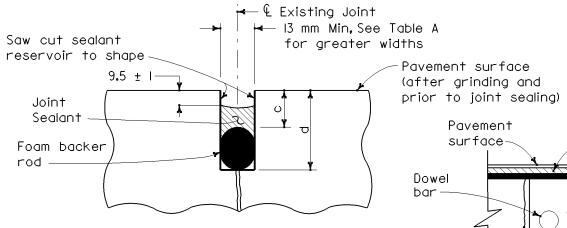

JOINT SEALING DETAIL

(See Table A)

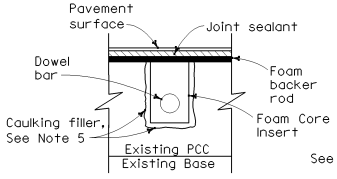

SECTION A-A

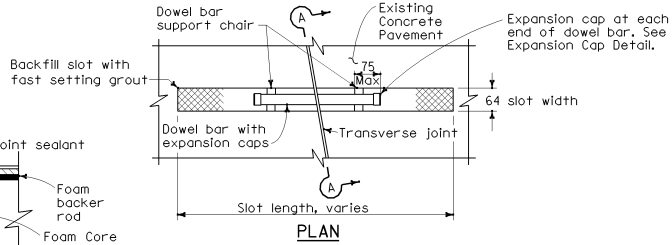

PLAN

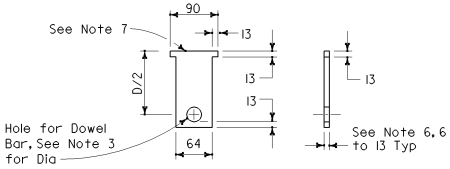

FOAM CORE INSERT DETAIL

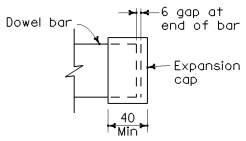

EXPANSION CAP DETAIL

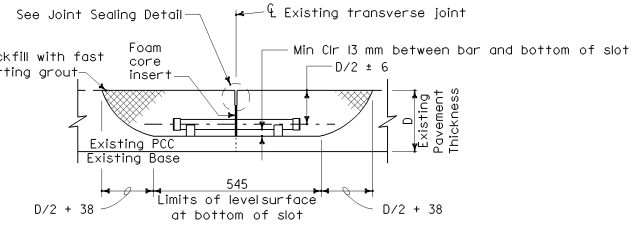

ELEVATION

DOWEL BAR PLACEMENT DETAIL

Caltrans Metric

DIST	COUNTY	ROUTE	KILOMETER POST TOTAL PROJECT	SHEET NO.	TOTAL SHEETS

William K. Fornboch
REGISTERED CIVIL ENGINEER

July 1, 2004
PLANS APPROVAL DATE

REGISTERED PROFESSIONAL ENGINEER William K. Fornboch NO. 49042 Exp. 09-30-04 CIVIL STATE OF CALIFORNIA

The State of California or its officers or agents shall not be responsible for the accuracy or completeness of electronic copies of this plan sheet.

To get to the Caltrans web site, go to: http://www.dot.ca.gov

NOTES

1. See Project Plans for existing pavement thickness, D, and the lanes to be retrofitted.
2. The details shown on this plan for dowel bar retrofit also apply to existing concrete pavement constructed with transverse weakened plane joints at right angles to longitudinal pavement joints.
3. 38 mm diameter smooth epoxy coated dowels 460 mm ± 6 mm in length are to be used when the existing pavement thickness, D, is equal to or greater than 215 mm. For a pavement thickness, D, less than 215 mm, use 32 mm diameter smooth epoxy coated dowels 460 mm ± 6 mm in length.
4. Where the existing outer shoulder pavement is asphalt concrete or portland cement concrete without tie bars in the longitudinal joints of the retrofit lane, the 'a' dimension shall be 300 mm and the 'b' dimension shall be 600 mm.
5. Seal existing transverse joint at bottom and sides of the dowel bar slot with caulking filler prior to placing dowel bar and foam core insert.
6. Thickness of foam core insert to match width of existing transverse weakened plane joint.
7. The top of the foam core insert is to match the top of the existing pavement surface initially. The upper portion of insert will be removed during shaping of the sealant reservoir.

TABLE A

Sawn Joint Width	Backer Rod Diameter	Dimension "c"	Dimension "d"
mm	mm ± 1	mm	mm
25	33	22	55
22	30	20	50
19	25	19	44
16	22	18	40
13	17	16	33

STATE OF CALIFORNIA
DEPARTMENT OF TRANSPORTATION

DOWEL BAR RETROFIT IN EXISTING CONCRETE PAVEMENT (LONGITUDINAL JOINTS COINCIDE WITH LANELINE PAVEMENT DELINEATION)

NO SCALE

ALL DIMENSIONS ARE IN MILLIMETERS UNLESS OTHERWISE SHOWN

P7

04-27-04

Back to Table of Contents

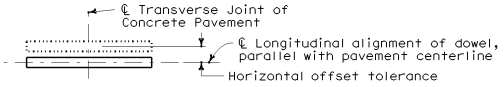

PLAN

HORIZONTAL OFFSET TOLERANCE

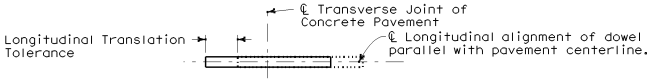

PLAN

LONGITUDINAL TRANSLATION TOLERANCE

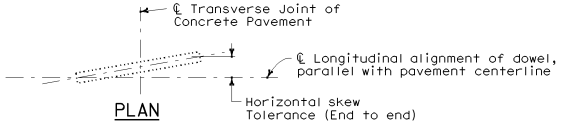

PLAN

HORIZONTAL SKEW TOLERANCE

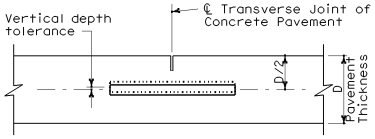

ELEVATION

VERTICAL DEPTH TOLERANCE

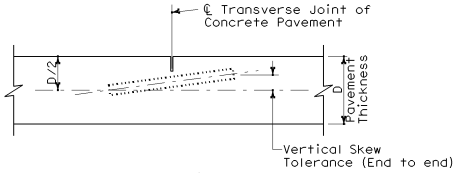

ELEVATION

VERTICAL SKEW TOLERANCE

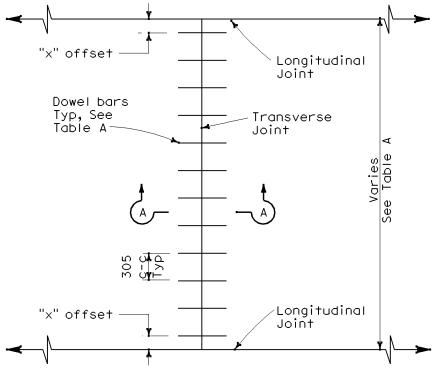

TRANSVERSE JOINT DOWEL BAR LAYOUT

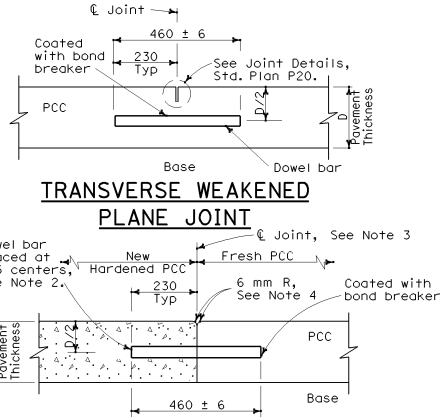

TRANSVERSE WEAKENED PLANE JOINT

TRANSVERSE CONTACT JOINT DETAIL

SECTION A-A

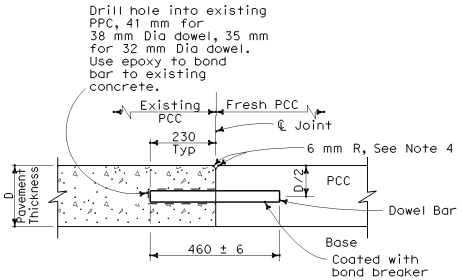

TRANSVERSE/LONGITUDINAL CONTACT JOINT FOR EXISTING PCC

(Drill and bond locations)

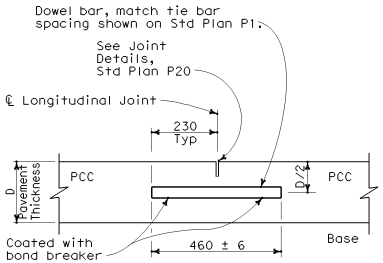

LONGITUDINAL WEAKENED PLANE JOINT WITH DOWEL BARS

(See Std Plan P18)

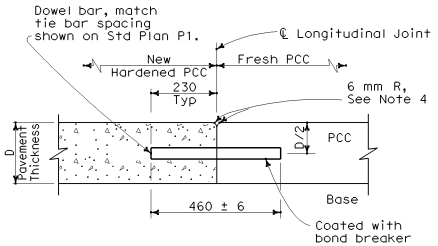

LONGITUDINAL CONTACT JOINT WITH DOWEL BARS

(See Std Plan P18)

TABLE A

Dowel Bar Transverse Spacing Table		
Width between Longitudinal Joints (m)	Offset Dimension "x" (mm)	Number of Dowels between Longitudinal Joints
4.27	152	14
3.66	152	12
3.60	125	12
3.05	152	10
3.00	125	10
2.44	152	8
2.4	130	8
1.52	150	5
1.50	140	5

See Note 3

NOTES

1. See Standard Plan P1 for typical dowel placement and locations.
2. 38 mm Dia smooth dowels are to be used with a pavement thickness, D, equal to or greater than 215 mm. For pavement thickness, D, less than 215 mm, use 32 mm Dia smooth dowels.
3. For widths not shown, see Project Plans.
4. If fresh PCC is placed adjacent to existing PCC, the top corner of the new hardened PCC does not need to be rounded to the 6 mm radius, as shown.

Caltrans Metric

DIST	COUNTY	ROUTE	KILOMETER POST TOTAL PROJECT	SHEET NO.	TOTAL SHEETS

REGISTERED CIVIL ENGINEER

July 1, 2004
PLANS APPROVAL DATE

REGISTERED PROFESSIONAL ENGINEER William K. Fornbach No. 49042 Exp. 09-30-04 CIVIL STATE OF CALIFORNIA

The State of California or its officers or agents shall not be responsible for the accuracy or completeness of electronic copies of this plan sheet.

To get to the Caltrans web site, go to: http://www.dot.ca.gov

STATE OF CALIFORNIA
DEPARTMENT OF TRANSPORTATION

CONCRETE PAVEMENT-DOWEL BAR DETAILS

NO SCALE

ALL DIMENSIONS ARE IN MILLIMETERS UNLESS OTHERWISE SHOWN

P10

06-18-04

Back to Table of Contents

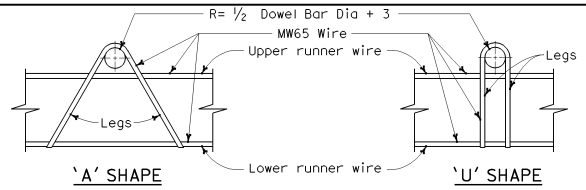

ASSEMBLY FRAME DETAILS

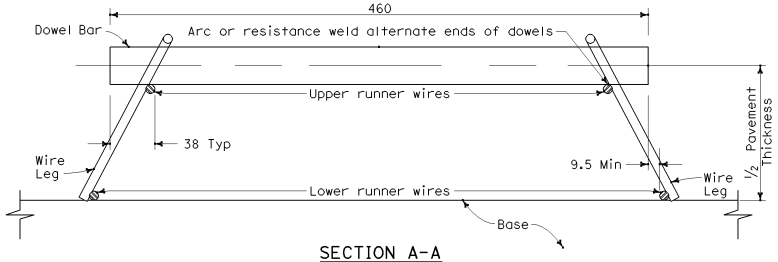

SECTION A-A

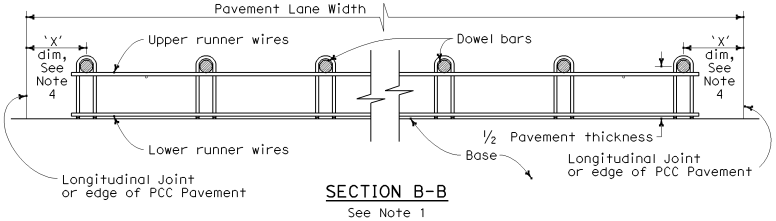

SECTION B-B

See Note 1

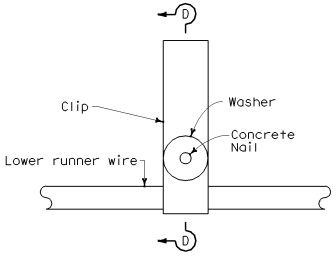

PLAN

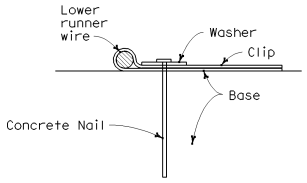

SECTION D-D

FASTENER DETAIL

NOTES

1. 'U' frame shape assembly shown. 'U' frame shape or 'A' frame shape are acceptable.
2. Wire sizes shown are minimum required.
3. All wire intersections are to be resistance welded.
4. For "x" dimension, number of dowel bars between longitudinal joints, and other details for dowel bars not shown, see Standard Plan P10.
5. See Standard Plan P5. Use tie bar spacing for longitudinal dowel bar locations.

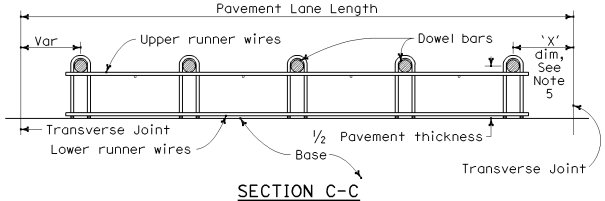

SECTION C-C

See Note 1

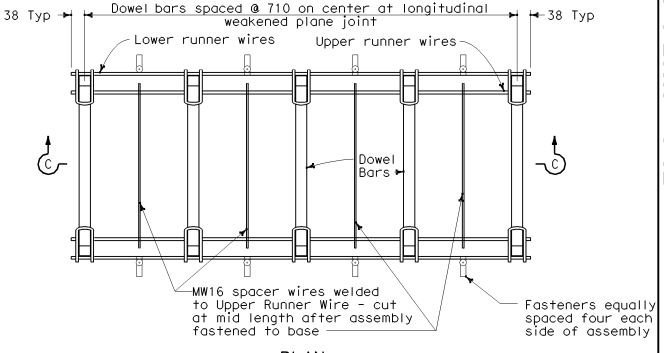

PLAN

DOWEL BAR BASKET (LONGITUDINAL JOINT)

See Note 1

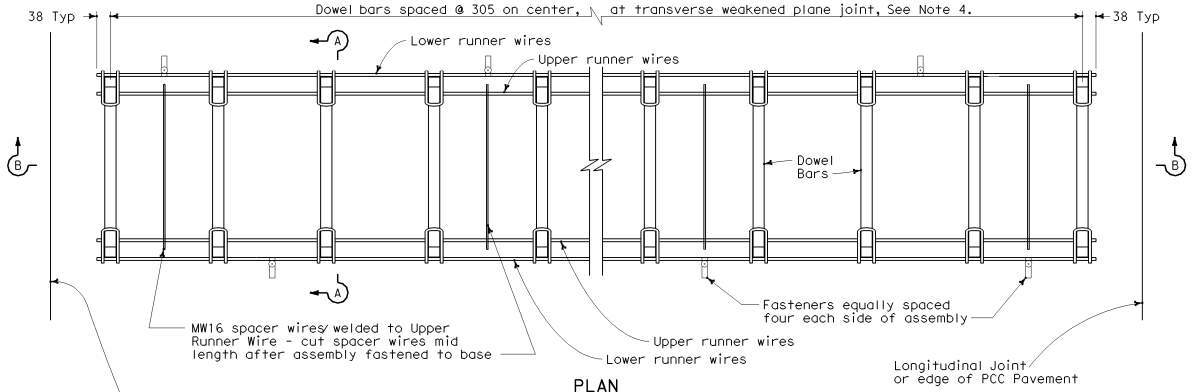

PLAN

DOWEL BAR BASKET (TRANSVERSE JOINT)

See Note 1

Caltrans Metric

DIST	COUNTY	ROUTE	KILOMETER POST TOTAL PROJECT	SHEET NO.	TOTAL SHEETS

William K. Fornbach
REGISTERED CIVIL ENGINEER

July 1, 2004
PLANS APPROVAL DATE

REGISTERED PROFESSIONAL ENGINEER William K. Fornbach NO. 49042 Exp. 09-30-04 CIVIL STATE OF CALIFORNIA

The State of California or its officers or agents shall not be responsible for the accuracy or completeness of electronic copies of this plan sheet.

To get to the Caltrans web site, go to: http://www.dot.ca.gov

STATE OF CALIFORNIA
DEPARTMENT OF TRANSPORTATION

CONCRETE PAVEMENT-DOWEL BAR BASKET DETAILS

NO SCALE

ALL DIMENSIONS ARE IN MILLIMETERS UNLESS OTHERWISE SHOWN

P12

04-27-04

Back to Table of Contents

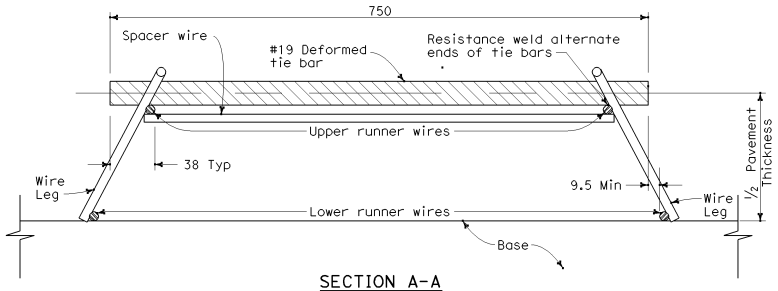

SECTION A-A

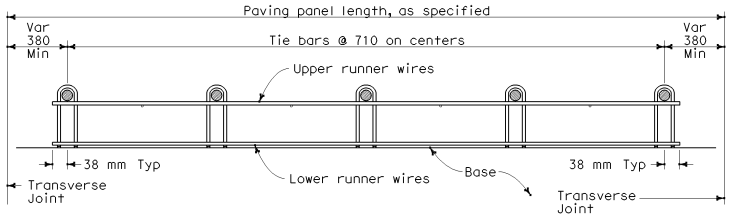

SECTION B-B

See Note 1

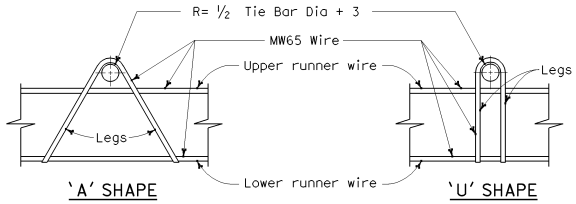

ASSEMBLY FRAME DETAILS

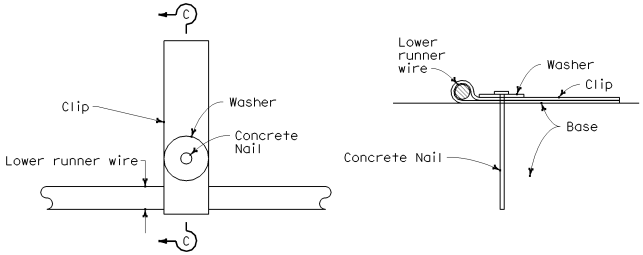

PLAN

SECTION C-C

FASTENER DETAIL

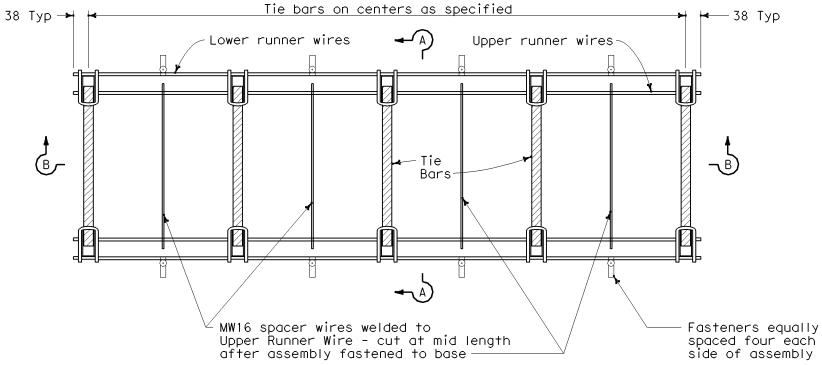

PLAN

TIE BAR BASKET

(TIE BARS AT LONGITUDINAL JOINT)
See Note 1

Caltrans Metric

DIST	COUNTY	ROUTE	KILOMETER POST TOTAL PROJECT	SHEET NO.	TOTAL SHEETS

REGISTERED CIVIL ENGINEER

July 1, 2004
PLANS APPROVAL DATE

REGISTERED PROFESSIONAL ENGINEER William K. Fornbach No. 49042 Exp. 09-30-04 CIVIL STATE OF CALIFORNIA

The State of California or its officers or agents shall not be responsible for the accuracy or completeness of electronic copies of this plan sheet.

To get to the Caltrans web site, go to: http://www.dot.ca.gov

NOTES

1. 'U' frame shape assembly shown. 'U' frame shape or 'A' frame shape are acceptable.
2. Wire sizes shown are minimum required.
3. All wire intersections are to be resistance welded.
4. Not for use on undoweled skewed concrete pavement.

STATE OF CALIFORNIA
DEPARTMENT OF TRANSPORTATION

CONCRETE PAVEMENT TIE BAR BASKET DETAILS

NO SCALE

ALL DIMENSIONS ARE IN MILLIMETERS UNLESS OTHERWISE SHOWN

P17

04-27-04

2004 Std PLAN P17

Back to Table of Contents

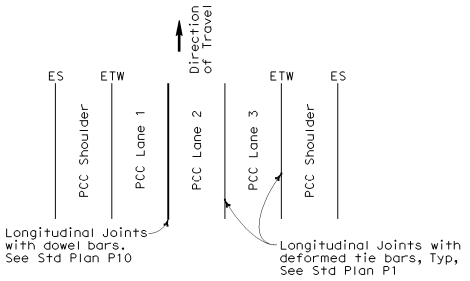

3 LANES WITH CONCRETE SHOULDERS
PLAN

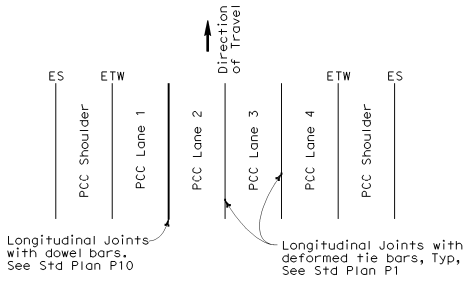

4 LANES WITH CONCRETE SHOULDERS
PLAN

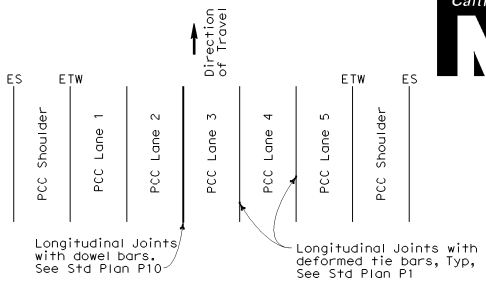

5 LANES WITH CONCRETE SHOULDERS
PLAN

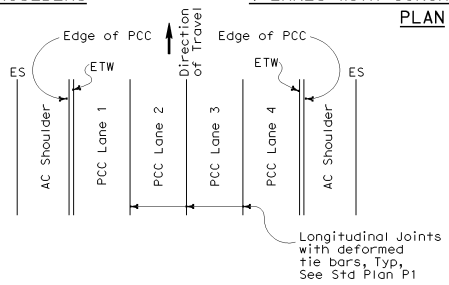

4 LANES OR LESS WITH AC SHOULDERS
PLAN

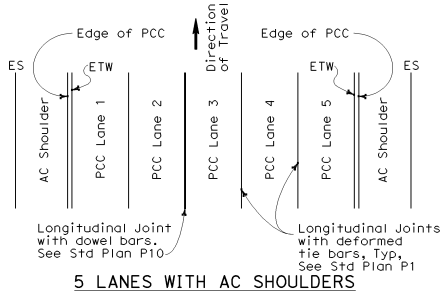

5 LANES WITH AC SHOULDERS
PLAN

NOTE

1. Where Lean Concrete Base is not used as base material, the joint filler material used for the longitudinal isolation joint shall only extend to the bottom of the new concrete slab. See Detail A.
2. Use 16±1 mm dimension for silicone sealant.
3. See Standard Plan P10 for longitudinal joint with dowel bars.

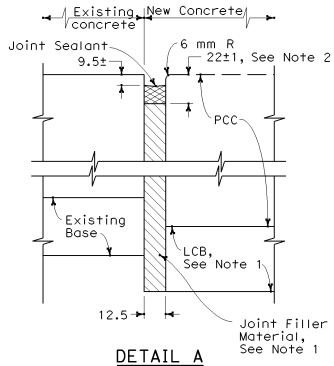

DETAIL A
LONGITUDINAL
ISOLATION JOINT

NEW CONSTRUCTION

Location of Longitudinal Joints

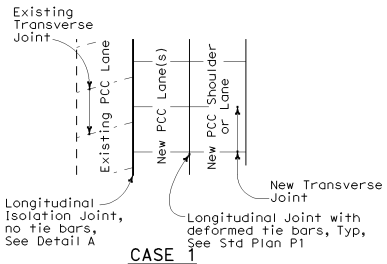

CASE 1
PLAN

Transverse Joints do not align between new and existing

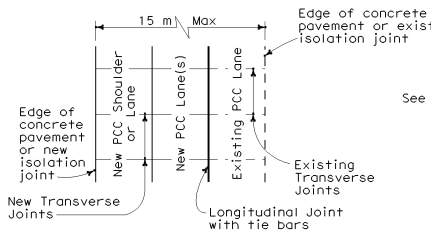

CASE 2
PLAN

Transverse Joints align between new and existing

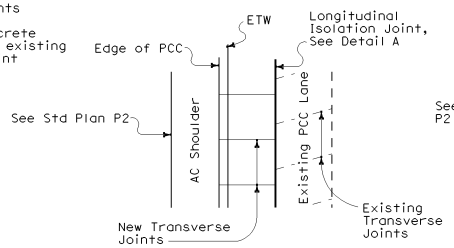

CASE 3 (AC SHOULDER)
PLAN

Transverse Joints do not align between new and existing

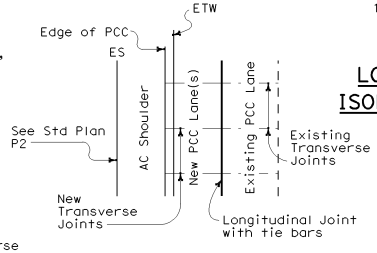

CASE 4 (AC SHOULDER)
PLAN

Transverse Joints align between new and existing

LANE/SHOULDER ADDITION OR RECONSTRUCTION

STATE OF CALIFORNIA
DEPARTMENT OF TRANSPORTATION

CONCRETE PAVEMENT-LANE SCHEMATICS AND ISOLATION JOINT DETAIL

NO SCALE

ALL DIMENSIONS ARE IN MILLIMETERS UNLESS OTHERWISE SHOWN

P18

DIST	COUNTY	ROUTE	KILOMETER POST TOTAL PROJECT	SHEET NO.	TOTAL SHEETS

Caltrans Metric

William K. Fornboch
REGISTERED CIVIL ENGINEER

July 1, 2004
PLANS APPROVAL DATE

REGISTERED PROFESSIONAL ENGINEER William K. Fornboch NO. 49042 Exp. 09-30-04 CIVIL STATE OF CALIFORNIA

The State of California or its officers or agents shall not be responsible for the accuracy or completeness of electronic copies of this plan sheet.

To get to the Caltrans web site, go to: http://www.dot.ca.gov

04-27-04

Back to Table of Contents

NOTES

1. Tie bars and dowels are not shown in joint seal details, see Standard Plans P1, P5, or P10 as applicable.

Caltrans Metric

DIST	COUNTY	ROUTE	KILOMETER POST TOTAL PROJECT	SHEET NO.	TOTAL SHEETS

William K. Fornbach
REGISTERED CIVIL ENGINEER

July 1, 2004
PLANS APPROVAL DATE

REGISTERED PROFESSIONAL ENGINEER William K. Fornbach No. 49042 Exp. 09-30-04 CIVIL STATE OF CALIFORNIA

The State of California or its officers or agents shall not be responsible for the accuracy or completeness of electronic copies of this plan sheet.

To get to the Caltrans web site, go to: http://www.dot.ca.gov

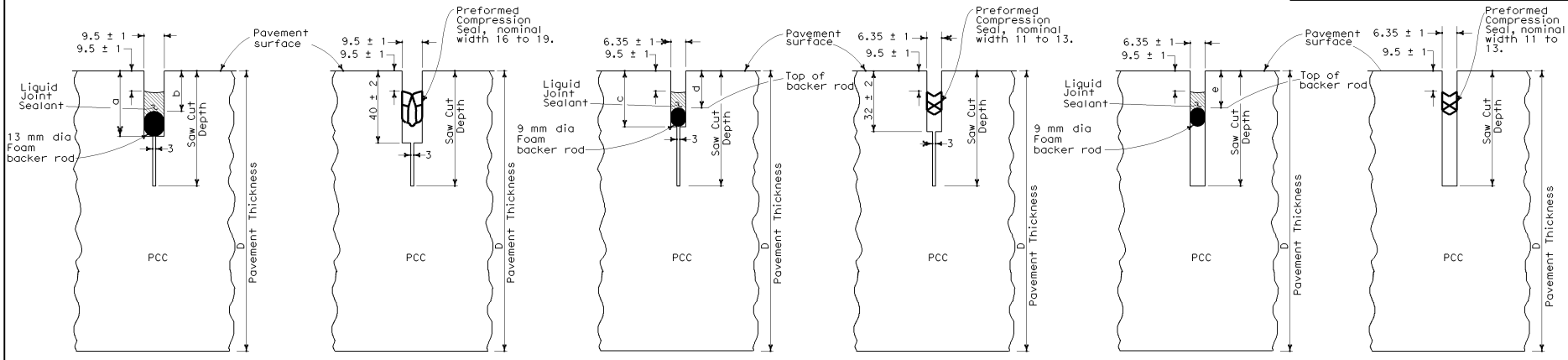

LIQUID SEALANT | COMPRESSION SEAL

TYPE A1
Transverse Weakened Plane Joints

LIQUID SEALANT | COMPRESSION SEAL

TYPE A2
Longitudinal Weakened Plane Joints

LIQUID SEALANT | COMPRESSION SEAL

TYPE B
Longitudinal or Transverse Weakened Plane Joint

LIQUID SEALANT RESERVOIR DEPTH

LIQUID SEALANT MATERIAL	9.5 mm Joint Width Type A1		6.35 mm Joint Width Type A2		6.35 mm Joint Width Type B
	DIMENSION		DIMENSION		DIMENSION
	a	b	c	d	e
SILCONE	26 ± 1	15 ± 1	23 ± 1	14 ± 1	14 ± 1
ASPHALT RUBBER	30 ± 1	19 ± 1	26 ± 1	17 ± 1	17 ± 1

STATE OF CALIFORNIA
DEPARTMENT OF TRANSPORTATION

CONCRETE PAVEMENT-JOINT DETAILS

NO SCALE

ALL DIMENSIONS ARE IN MILLIMETERS UNLESS OTHERWISE SHOWN

P20

2004 Std PLAN P20

04-27-04

Back to Table of Contents

DIST	COUNTY	ROUTE	KILOMETER POST TOTAL PROJECT	SHEET NO.	TOTAL SHEETS

Caltrans Metric

William K. Fornbach
REGISTERED CIVIL ENGINEER

July 1, 2004
PLANS APPROVAL DATE

REGISTERED PROFESSIONAL ENGINEER William K. Fornbach NO. 49042 Exp. 09-30-04 CIVIL STATE OF CALIFORNIA

The State of California or its officers or agents shall not be responsible for the accuracy or completeness of electronic copies of this plan sheet.

To get to the Caltrans web site, go to: http://www.dot.ca.gov

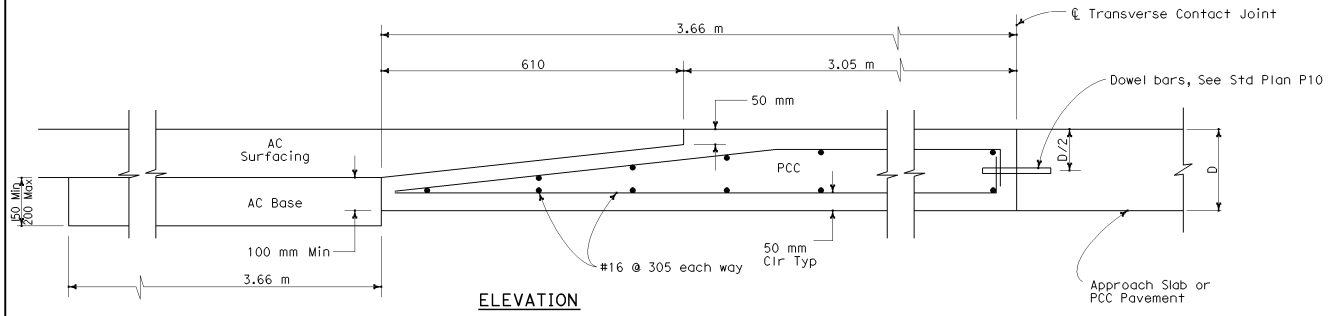

ELEVATION

CONCRETE PAVEMENT TO ASPHALT CONCRETE PAVEMENT TRANSITION PANEL

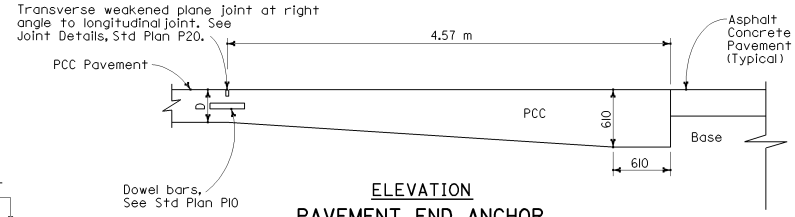

ELEVATION

PAVEMENT END ANCHOR

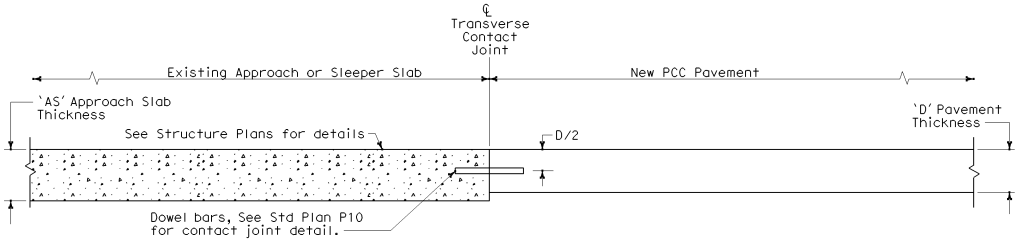

ELEVATION

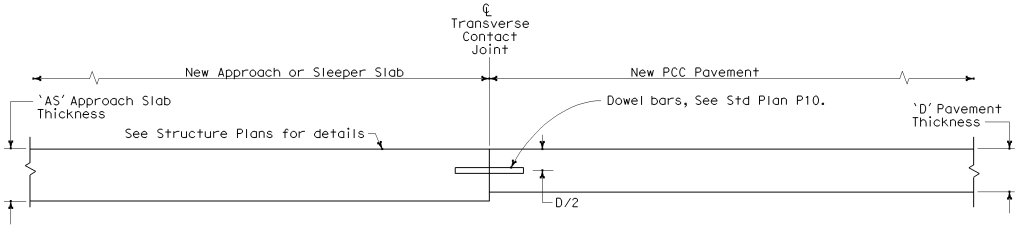

ELEVATION

CONCRETE PAVEMENT TRANSITION TO APPROACH OR SLEEPER SLAB

STATE OF CALIFORNIA
DEPARTMENT OF TRANSPORTATION

CONCRETE PAVEMENT-END PANEL PAVEMENT TRANSITIONS

NO SCALE

ALL DIMENSIONS ARE IN MILLIMETERS UNLESS OTHERWISE SHOWN

P30

2004 Std PLAN P30

04-27-04

Back to Table of Contents

NOTES

1. Details for gore area paving are applicable to both exit and entrance ramps.
2. Transverse Joint Layouts are not shown. Refer to Standard Plan P1 or to Project Plans for details regarding joint layouts, tie bars, and dowels not shown.
3. WWF 102 x 102 - MW30 x MW30 can be used in place of #13 Bars.
4. Omit longitudinal joint when PCC on ramp shoulder is less than 915 mm.
5. Place joint perpendicular to ramp longitudinal joints. Match location of joint with ramp transverse weakened plane joints.
6. Place joint perpendicular to mainline longitudinal joints. Match location of joint with mainline transverse weakened plane joints.
7. Isolation joint detail shown on Standard Plan P18.
8. Transverse joints to be spaced from fixed transverse joint and shall follow spacing pattern on Standard Plan P1. Minimum spacing shall be 1.83 meters.

Caltrans Metric

DIST	COUNTY	ROUTE	KILOMETER POST TOTAL PROJECT	SHEET NO.	TOTAL SHEETS

REGISTERED CIVIL ENGINEER

July 1, 2004
PLANS APPROVAL DATE

REGISTERED PROFESSIONAL ENGINEER William K. Fornbach No. 49042 Exp. 09-30-04 CIVIL STATE OF CALIFORNIA

The State of California or its officers or agents shall not be responsible for the accuracy or completeness of electronic copies of this plan sheet.

To get to the Caltrans web site, go to: http://www.dot.ca.gov

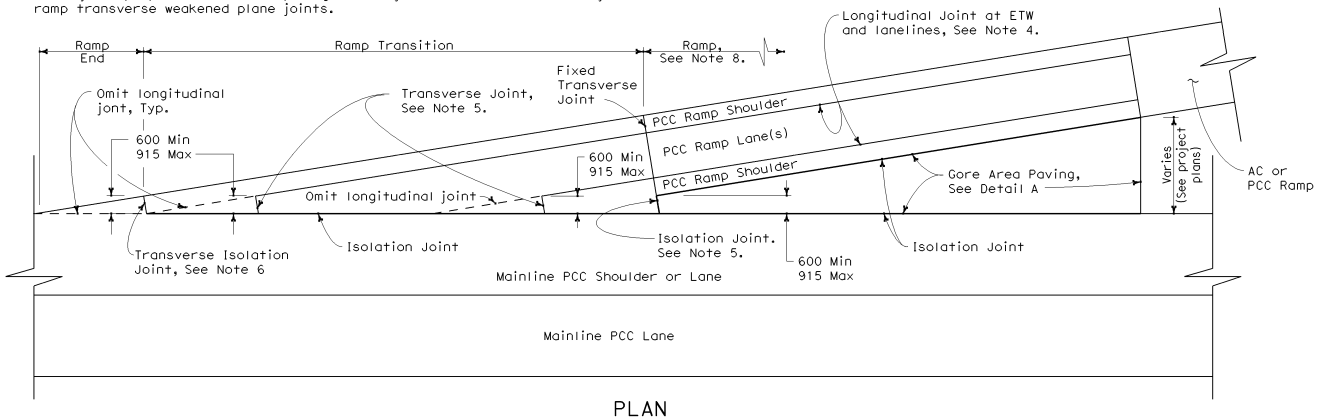

PLAN
GORE AREA PAVING
See Note 1

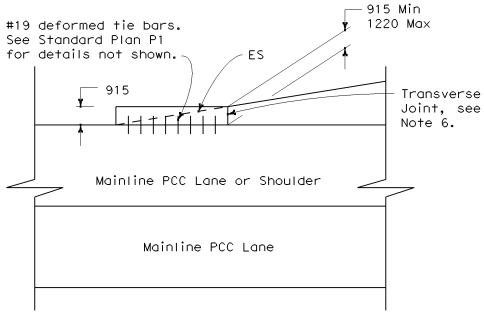

PLAN
ALTERNATE RAMP END DETAIL

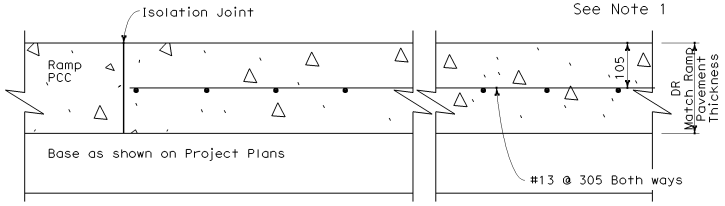

SECTION A-A

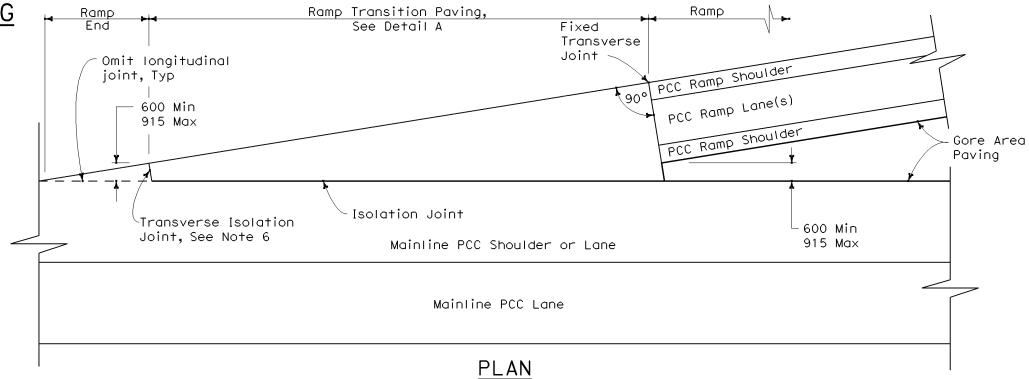

PLAN
ALTERNATE RAMP TRANSITION DETAIL

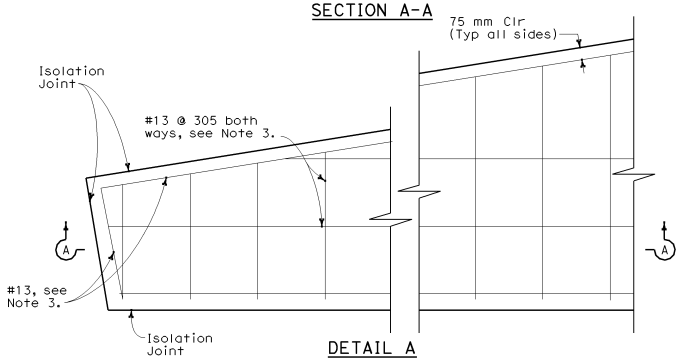

DETAIL A

STATE OF CALIFORNIA
DEPARTMENT OF TRANSPORTATION

CONCRETE PAVEMENT-RAMP GORE AREA PAVING DETAILS

NO SCALE

ALL DIMENSIONS ARE IN MILLIMETERS UNLESS OTHERWISE SHOWN

P35

05-13-04

2004 Std PLAN P35

Back to Table of Contents

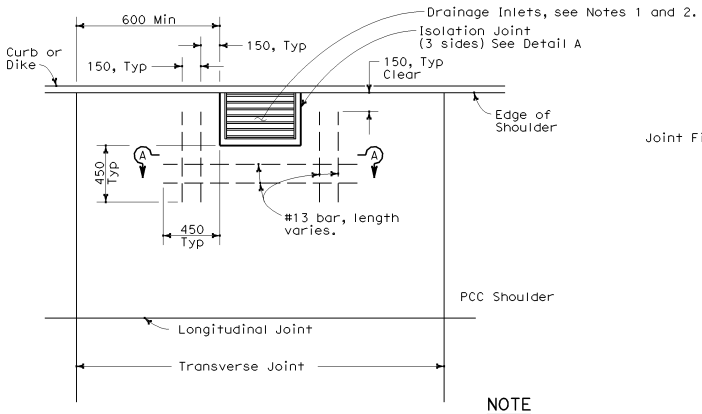

CASE 1

Transverse joint more than 600 mm clear of drainage inlet wall.

NOTE

Dowels and tie bars not shown, See Std. Plan P1.

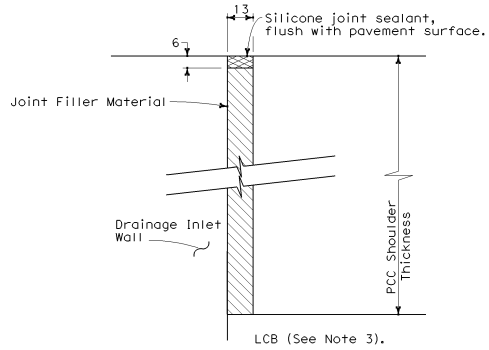

DETAIL "A"
ISOLATION JOINT AROUND DRAINAGE INLET

NOTES

1. Refer to Project Plans for location and types of drainage inlets.
2. Top of inlet shall be flush with shoulder surface.
3. Extend joint filler material to bottom of LCB. Where LCB is not used as base material, the joint filler material shall only extend to the bottom of the new PCC pavement.

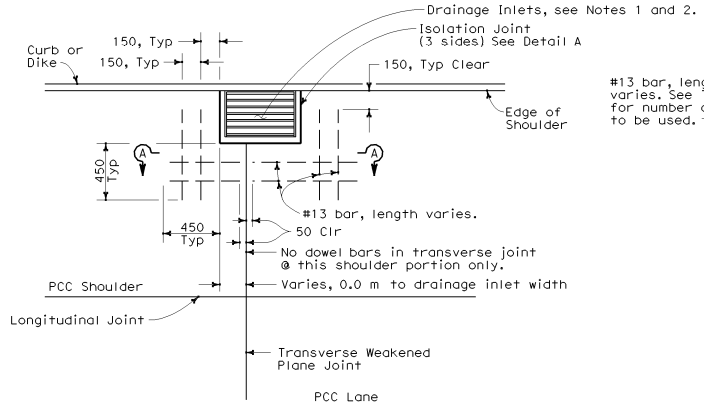

CASE 2

Transverse joint intersects drainage inlet, or matches drainage inlet wall.

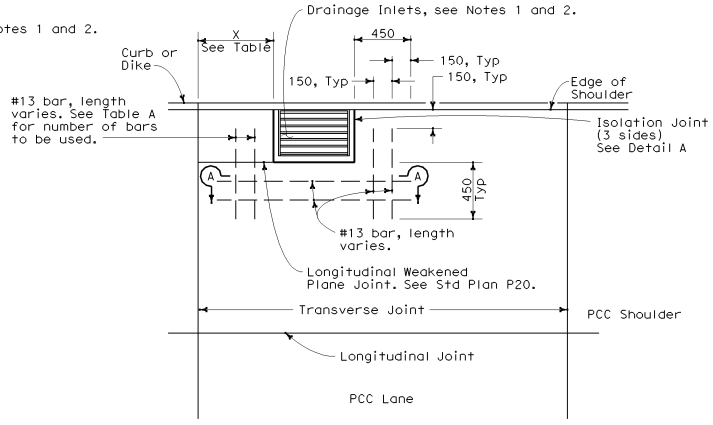

CASE 3

Transverse joint within 600 mm of drainage inlet wall, or matches drainage inlet wall.

TABLE A

DISTANCE X	BARS REQUIRED
600-450	2
450-225	1 @ X/2
225 or less	None

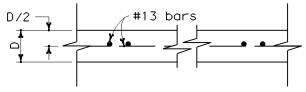

SECTION A-A

D = Pavement Thickness

DIST	COUNTY	ROUTE	KILOMETER POST TOTAL PROJECT	SHEET NO.	TOTAL SHEETS

Caltrans Metric

William K. Fornbach
REGISTERED CIVIL ENGINEER

July 1, 2004
PLANS APPROVAL DATE

REGISTERED PROFESSIONAL ENGINEER William K. Fornbach NO. 49042 Exp. 09-30-04 CIVIL STATE OF CALIFORNIA

The State of California or its officers or agents shall not be responsible for the accuracy or completeness of electronic copies of this plan sheet.

To get to the Caltrans web site, go to: http://www.dot.ca.gov

STATE OF CALIFORNIA
DEPARTMENT OF TRANSPORTATION

CONCRETE PAVEMENT DRAINAGE INLET DETAILS No. 1

NO SCALE

ALL DIMENSIONS ARE IN MILLIMETERS UNLESS OTHERWISE SHOWN

P45

04-27-04

Back to Table of Contents

DIST	COUNTY	ROUTE	KILOMETER POST TOTAL PROJECT	SHEET NO.	TOTAL SHEETS

Caltrans Metric

REGISTERED CIVIL ENGINEER

July 1, 2004
PLANS APPROVAL DATE

REGISTERED PROFESSIONAL ENGINEER William K. Fornbach No. 49042 Exp. 09-30-04 CIVIL STATE OF CALIFORNIA

The State of California or its officers or agents shall not be responsible for the accuracy or completeness of electronic copies of this plan sheet.

To get to the Caltrans web site, go to: http://www.dot.ca.gov

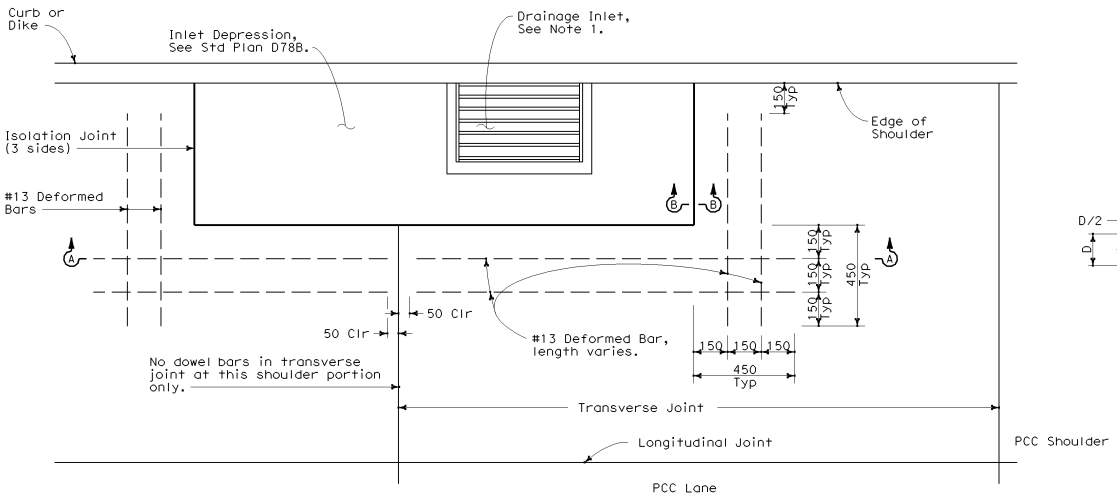

CASE A

Transverse Joint intersects inlet depression.

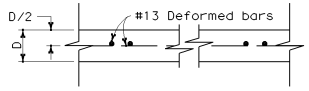

SECTION A-A

D = Pavement Thickness

TABLE A

DISTANCE X	BARS REQUIRED
600-450	2
450-300	1
300 or less	None

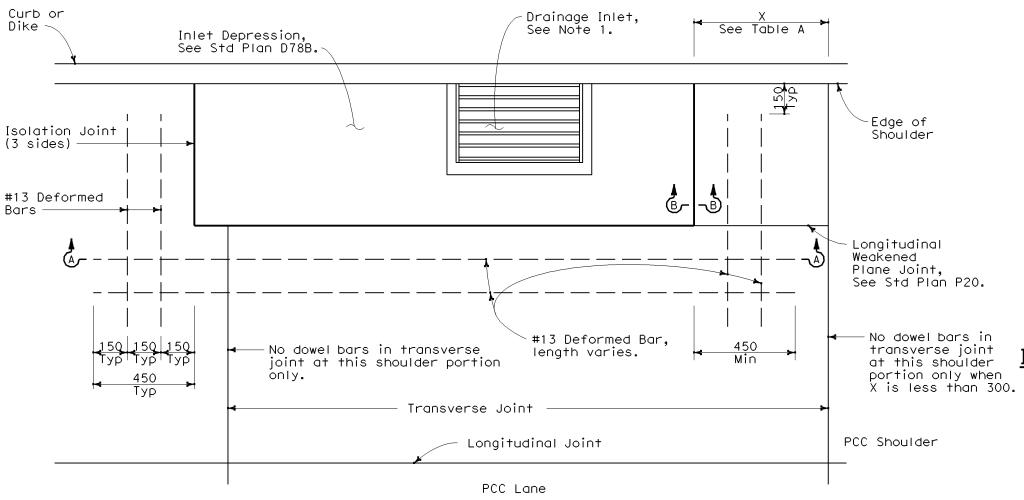

CASE B

Transverse Joint within 600 mm of edge of inlet depression.

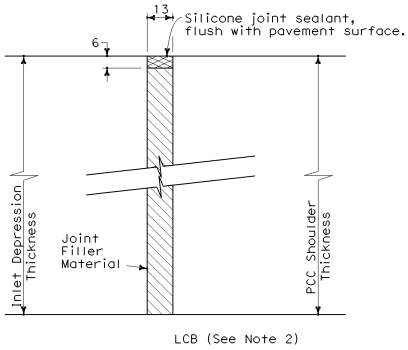

SECTION B-B

ISOLATION JOINT AROUND CONCRETE APRON

NOTES

1. Refer to Project Plans for location and types of drainage inlets.
2. Extend joint filler material to bottom of LCB. Where LCB is not used as base material, the joint filler material shall only extend to the bottom of the new PCC pavement.

STATE OF CALIFORNIA
DEPARTMENT OF TRANSPORTATION

CONCRETE PAVEMENT DRAINAGE INLET DETAILS No. 2

NO SCALE

ALL DIMENSIONS ARE IN MILLIMETERS UNLESS OTHERWISE SHOWN

P46

04-27-04

Back to Table of Contents

DIST	COUNTY	ROUTE	KILOMETER POST TOTAL PROJECT	SHEET NO.	TOTAL SHEETS

Caltrans Metric

William K. Fornboch
REGISTERED CIVIL ENGINEER

July 1, 2004
PLANS APPROVAL DATE

REGISTERED PROFESSIONAL ENGINEER William K. Fornboch NO. 49042 Exp. 09-30-04 CIVIL STATE OF CALIFORNIA

The State of California or its officers or agents shall not be responsible for the accuracy or completeness of electronic copies of this plan sheet.

To get to the Caltrans web site, go to: http://www.dot.ca.gov

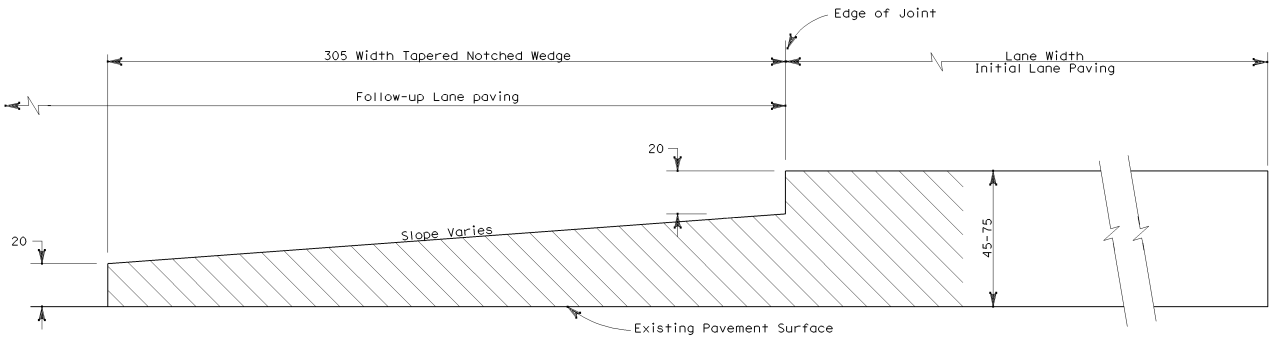

SECTION A-A

LONGITUDINAL TAPERED NOTCHED WEDGE JOINT

(ASPHALT CONCRETE PAVING)

NOTES

1. Tapered notch wedge shall extend 305 mm into adjacent lane to receive follow-up paving.

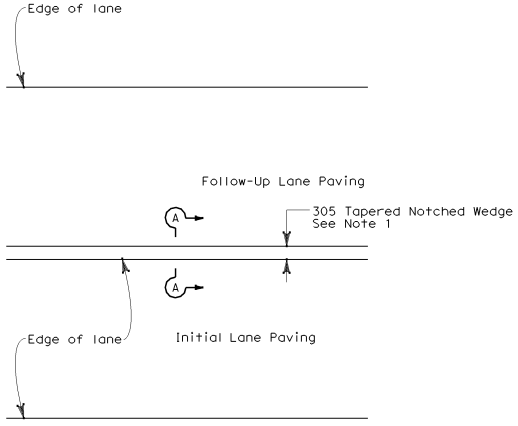

DIVIDED MULTILANE HIGHWAY

STATE OF CALIFORNIA
DEPARTMENT OF TRANSPORTATION

ASPHALT CONCRETE PAVING (LONGITUDINAL TAPERED NOTCHED WEDGE JOINT)

NO SCALE

ALL DIMENSIONS ARE IN MILLIMETERS UNLESS OTHERWISE SHOWN

P70

2004 Std PLAN P70

04-27-04

Back to Table of Contents

DIST	COUNTY	ROUTE	KILOMETER POST TOTAL PROJECT	SHEET NO.	TOTAL SHEETS

Caltrans Metric

REGISTERED CIVIL ENGINEER

July 1, 2004
PLANS APPROVAL DATE

REGISTERED PROFESSIONAL ENGINEER
Overcomer Y. Hor
No. 45803
Exp. 12-31-06
CIVIL
STATE OF CALIFORNIA

The State of California or its officers or agents shall not be responsible for the accuracy or completeness of electronic copies of this plan sheet.

To get to the Caltrans web site, go to: http://www.dot.ca.gov

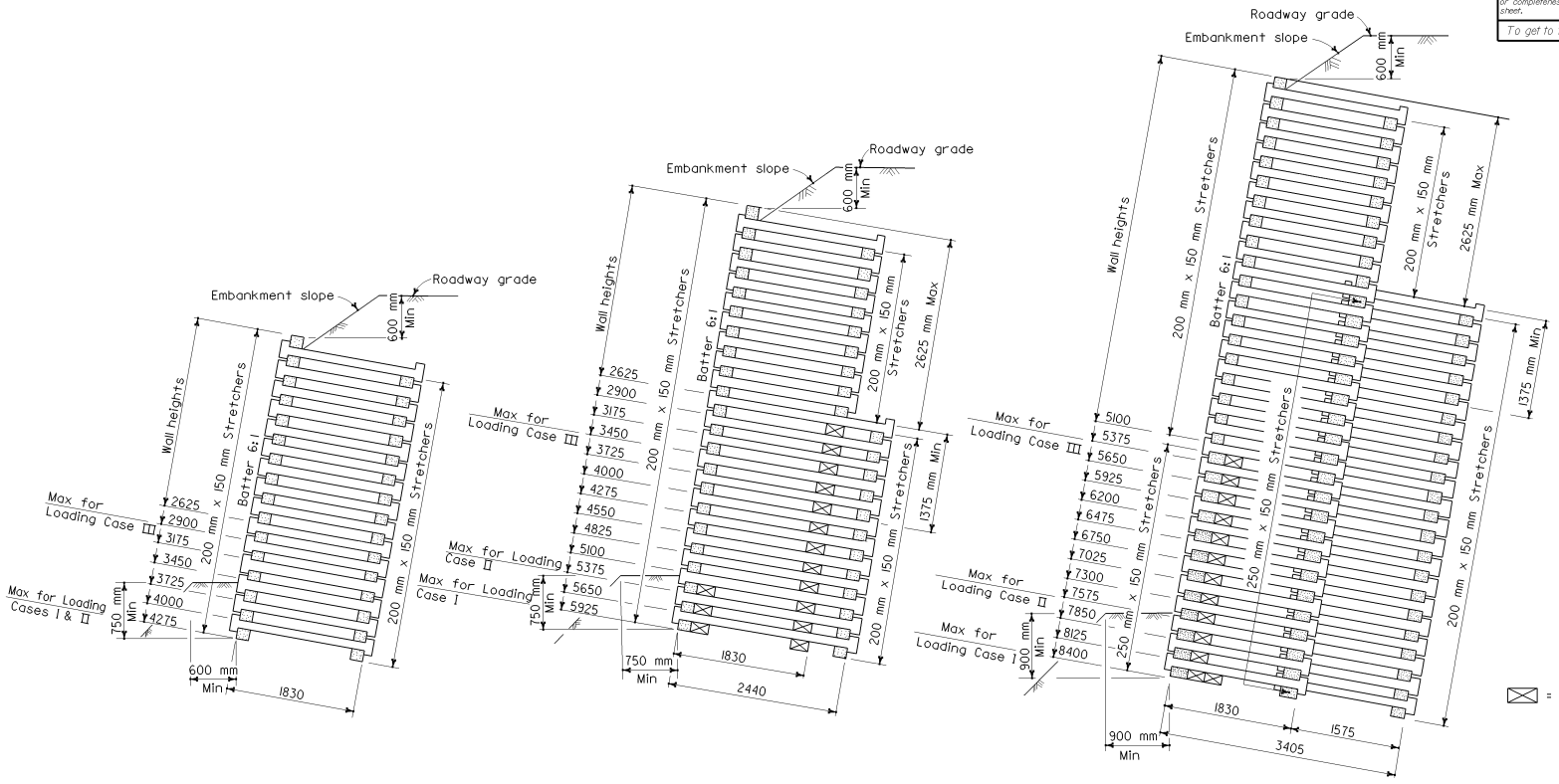

TYPE A

TYPE B

TYPE C

LEGEND

⊠ = 250 mm x 150 mm x 250 mm Filler block placed under header

STATE OF CALIFORNIA
DEPARTMENT OF TRANSPORTATION

REINFORCED CONCRETE CRIB WALL BATTERED WALL- TYPES A, B AND C

NO SCALE

ALL DIMENSIONS ARE IN MILLIMETERS UNLESS OTHERWISE SHOWN

C7A

2004 Std PLAN C7A

05-24-04

Back to Table of Contents

DIST	COUNTY	ROUTE	KILOMETER POST TOTAL PROJECT	SHEET NO.	TOTAL SHEETS

Caltrans Metric

REGISTERED CIVIL ENGINEER

July 1, 2004
PLANS APPROVAL DATE

REGISTERED PROFESSIONAL ENGINEER Overcomer Y. Hor No. 45803 Exp. 12-31-06 CIVIL STATE OF CALIFORNIA

The State of California or its officers or agents shall not be responsible for the accuracy or completeness of electronic copies of this plan sheet.

To get to the Caltrans web site, go to: http://www.dot.ca.gov

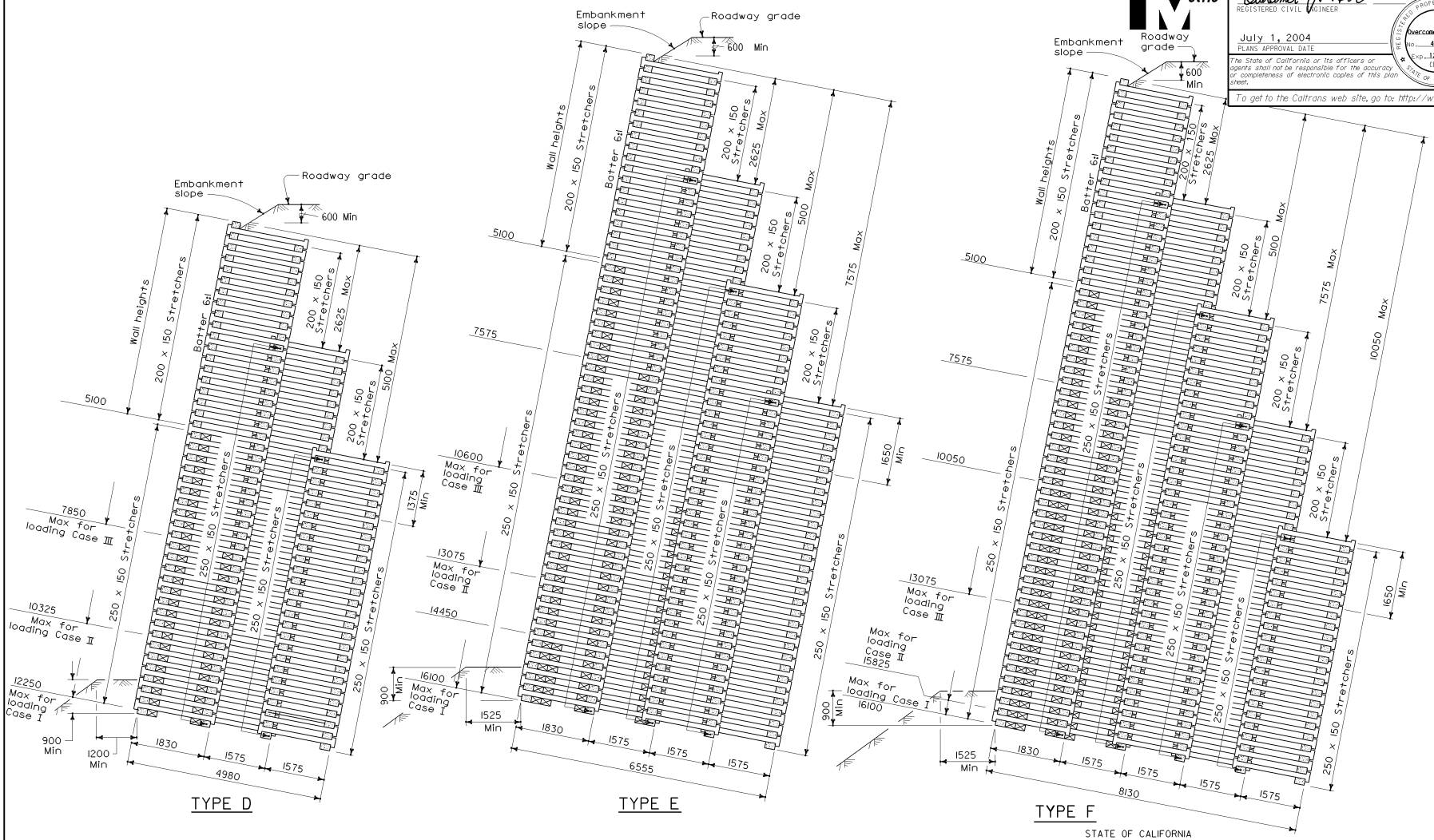

LEGEND

⊠ = 250 x 150 x 250 Filler block placed under header

ALL DIMENSIONS ARE IN MILLIMETERS UNLESS OTHERWISE SHOWN

STATE OF CALIFORNIA
DEPARTMENT OF TRANSPORTATION

REINFORCED CONCRETE CRIB WALL BATTERED WALL-TYPES D, E AND F

NO SCALE

C7B

03-26-04

Back to Table of Contents

DIST	COUNTY	ROUTE	KILOMETER POST TOTAL PROJECT	SHEET NO.	TOTAL SHEETS

Caltrans Metric

REGISTERED CIVIL ENGINEER

July 1, 2004
PLANS APPROVAL DATE

REGISTERED PROFESSIONAL ENGINEER
Overcomer Y. Hor
No. 45803
Exp. 12-31-06
CIVIL
STATE OF CALIFORNIA

The State of California or its officers or agents shall not be responsible for the accuracy or completeness of electronic copies of this plan sheet.

To get to the Caltrans web site, go to: http://www.dot.ca.gov

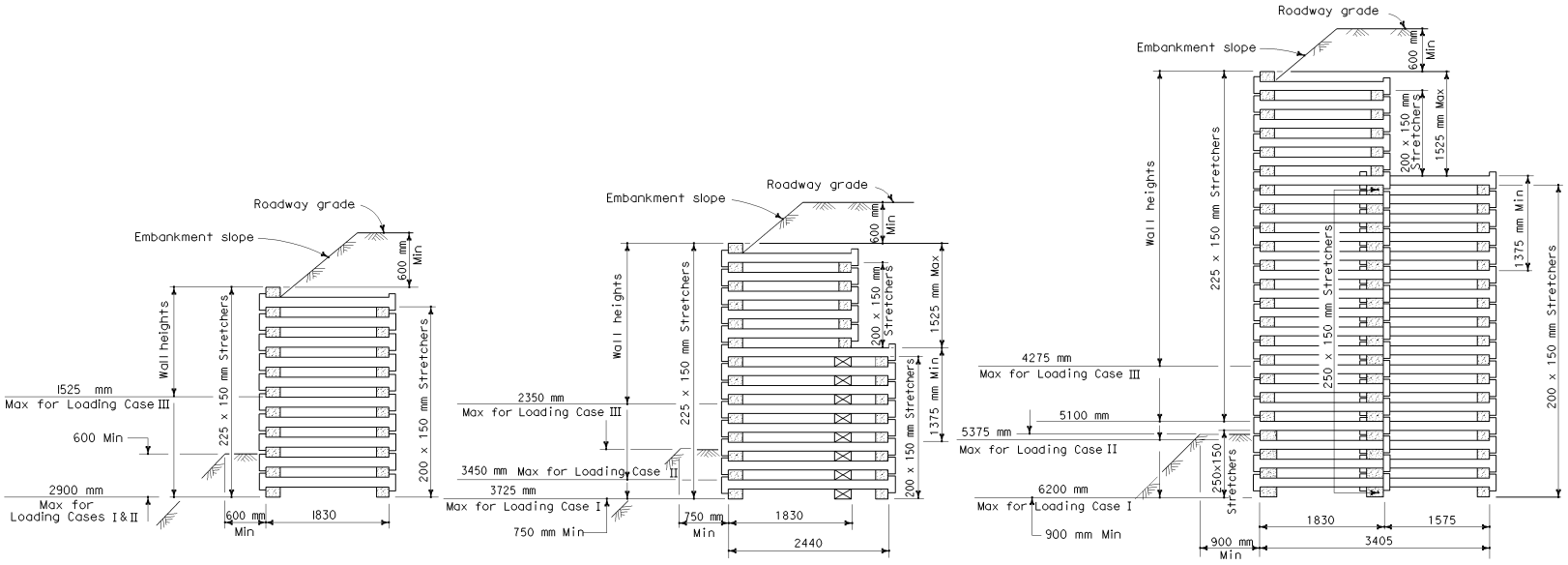

TYPE A

TYPE B

TYPE C

LEGEND

⊠ = 250 x 150 x 250 mm Filler block placed under header

STATE OF CALIFORNIA
DEPARTMENT OF TRANSPORTATION

REINFORCED CONCRETE CRIB WALL VERTICAL WALL- TYPES A, B AND C

NO SCALE

ALL DIMENSIONS ARE IN MILLIMETERS UNLESS OTHERWISE SHOWN

C7C

2004 Std PLAN C7C

03-26-04

Back to Table of Contents

DIST	COUNTY	ROUTE	KILOMETER POST TOTAL PROJECT	SHEET NO.	TOTAL SHEETS

Caltrans Metric

REGISTERED CIVIL ENGINEER

July 1, 2004
PLANS APPROVAL DATE

REGISTERED PROFESSIONAL ENGINEER
Overcomer Y. Hor
No. 45803
Exp. 12-31-06
CIVIL
STATE OF CALIFORNIA

The State of California or its officers or agents shall not be responsible for the accuracy or completeness of electronic copies of this plan sheet.

To get to the Caltrans web site, go to: http://www.dot.ca.gov

2004 Std PLAN C7D

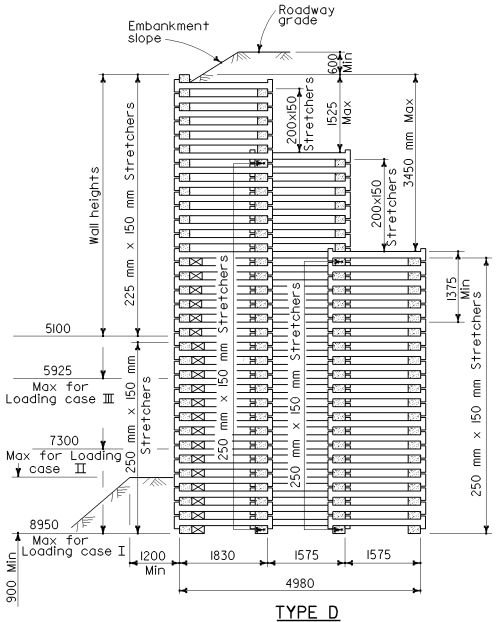

TYPE D

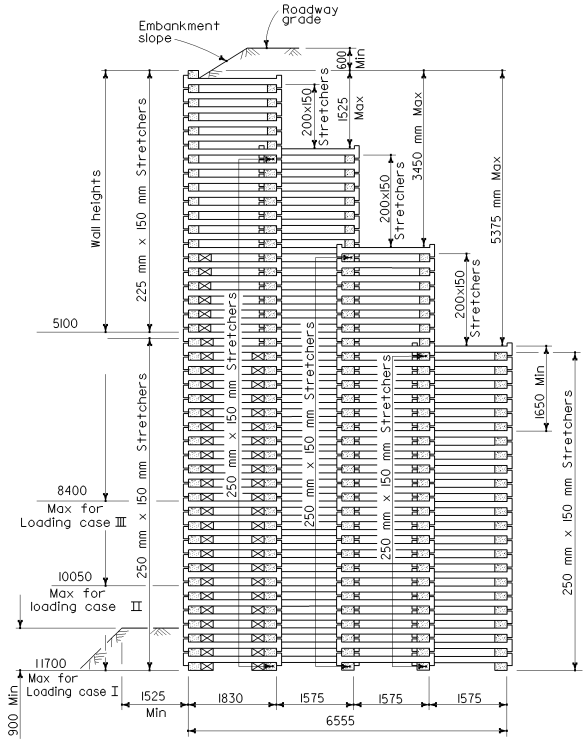

TYPE E

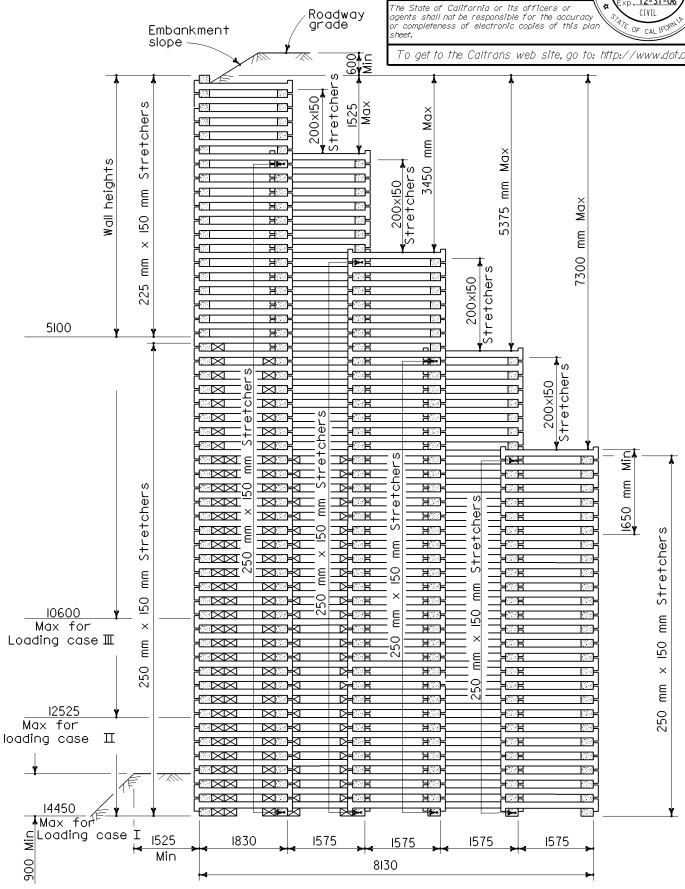

TYPE F

LEGEND

⊠ = 250 mm x 150 mm x 250 mm Filler block placed under header

STATE OF CALIFORNIA
DEPARTMENT OF TRANSPORTATION

REINFORCED CONCRETE CRIB WALL VERTICAL WALL-TYPES D, E AND F

NO SCALE

ALL DIMENSIONS ARE IN MILLIMETERS UNLESS OTHERWISE SHOWN

C7D

03-26-04

Back to Table of Contents

DIST	COUNTY	ROUTE	KILOMETER POST TOTAL PROJECT	SHEET NO.	TOTAL SHEETS

REGISTERED CIVIL ENGINEER

July 1, 2004
PLANS APPROVAL DATE

REGISTERED PROFESSIONAL ENGINEER Overcomer Y. Hor No. 45803 Exp. 12-31-06 CIVIL STATE OF CALIFORNIA

The State of California or its officers or agents shall not be responsible for the accuracy or completeness of electronic copies of this plan sheet.

To get to the Caltrans web site, go to: http://www.dot.ca.gov

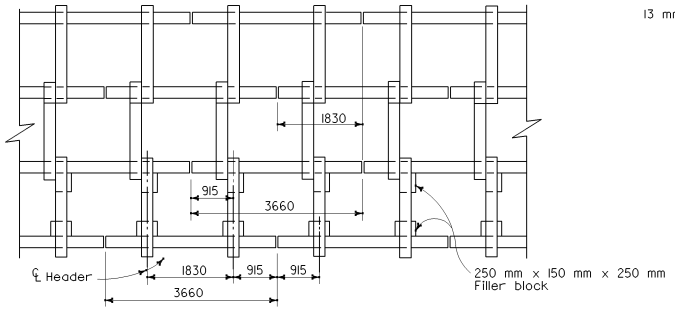

PARTIAL PLAN AT BASE

TYPE "D" SHOWN, OTHERS SIMILAR

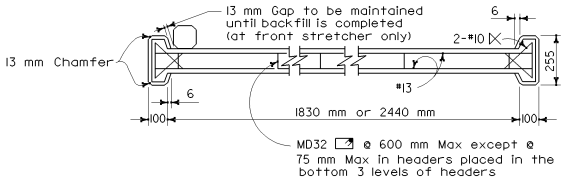

ELEVATION

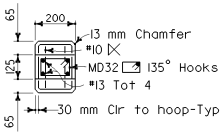

SECTION

HEADER DETAIL

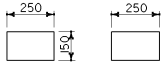

END SIDE

FILLER BLOCK DETAIL

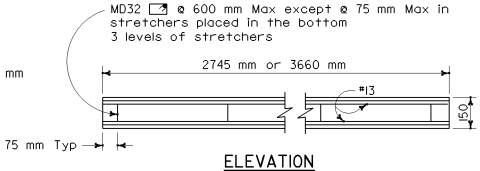

ELEVATION

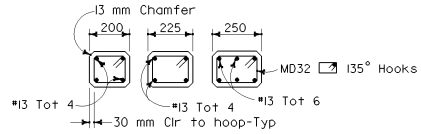

SECTION

STRETCHER DETAIL

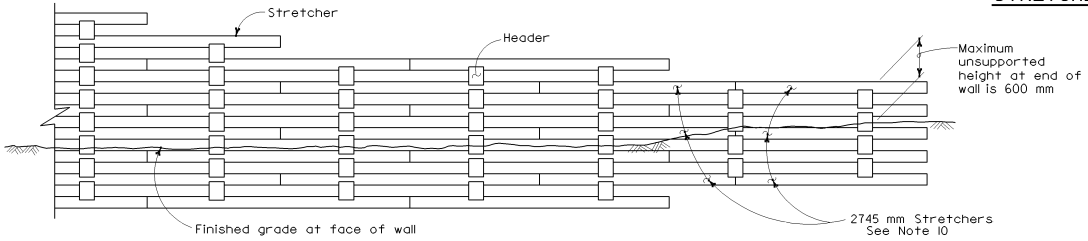

PARTIAL ELEVATION

GENERAL NOTES

1. Reinforced Concrete:
   Concrete - f'c = 25 MPa
   Bar Reinforcement - fy = 420 MPa
   Deformed Wire - fy = 450 MPa
2. Soil Parameters:
   Backfill - Φ = 34°
   δ = 22.7°
   γ = 19 kN/m^3
   Foundation - Φ = 34°
   Lateral earth pressure determined by Coulomb's theory.
3. Concrete to concrete bearing surfaces shall be finished to a smooth plane. The gap between bearing surfaces shall not exceed 3 millimeters. Where a gap of 1.5 millimeters to 3.0 millimeters exists, a 1.5 millimeters pad of asphalt felt or sheet neoprene shall be placed between the bearing surfaces. For wall Types D, E, and F, a 1.5 millimeters asphalt felt pad or sheet neoprene shall be placed between all concrete bearing surfaces below the 8950 millimeters level.
4. All members may be manufactured to dimensions 4 millimeters greater in thickness and stretchers 13 millimeters less in length.
5. Where an opening is specified in the face of a wall, special length stretchers and additional headers may be required.
6. For non-tangent wall alignment, special length stretchers may be required.
7. For non-tangent wall alignment and at locations where filler blocks are required, special length front face closure members may be required.
8. The thickness of the lowest step for each wall type shall not be less than the dimension shown on these plans.
9. Use of "Front Face Closure Member" shall be required only when specified on project plans or in the Special Provisions.
10. All stretchers are 3660 millimeters except as noted.

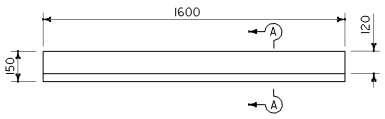

ELEVATION

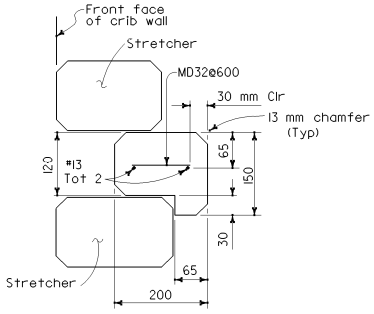

SECTION A-A

FRONT FACE CLOSURE MEMBER

STATE OF CALIFORNIA
DEPARTMENT OF TRANSPORTATION

REINFORCED CONCRETE CRIB WALL
TYPES A, B, C, D, E AND F HEADER AND STRETCHER DETAILS

NO SCALE

ALL DIMENSIONS ARE IN MILLIMETERS UNLESS OTHERWISE SHOWN

C7E

03-26-04

2004 Std PLAN C7E

Back to Table of Contents

FOUNDATION PRESSURE-BATTERED WALL

(kPa)

TYPE	LOADING CASE	WALL HEIGHT 425	700	975	1250	1525	1800	2075	2350	2625	2900	3175	3450	3725	4000	4275	4550	4825	5100	5375	5650	5925	6200	6475	6750	7025	7300	7575	7850	8125
A	I	35*	40*	50*	55*	60*	65*	70*	70*	70*	75	90	110	130	150	175▮														
	II	40*	45*	50*	60*	65*	70*	75*	75*	75*	75*	85	100	120	140	165														
	III	45*	50*	50*	55*	55*	65	80	100	125	155▮																			
B	I									65*	70	80	90	105	120	130	145	165	180	205	225	250▮								
	II									65	80	90	105	120	135	155	170	190	215	240▮										
	III									105	125	150	175▮																	
C	I											75*	85	95	105	110	120	130	140	155	165	180	195	210	225	245	265	285	305	325
	II											90*	85	100	115	125	135	150	165	180	195	215	230	250	270	295	320	345▮		
	III											110*	120	140	160	185	205	230	260	290▮										
D	I																105	115	120	130	140	150	160	170	180	190	200	210	220	235
	II																125*	120*	130	140	155	170	185	200	210	225	240	255	275	290
	III																180*	165*	170	190	210	235	255	280	305	330	355	385	415▮	
E	I																						140	145	155	165	175	185	195	205
	II																						170*	165*	170	180	195	210	220	235
	III																						250*	235*	220*	240	260	280	300	325
F	I																													180
	II																													200*
	III																													290*

TYPE	LOADING CASE	8400	8675	8950	9225	9500	9775	10050	10325	10600	10875	11150	11425	11700	11975	12250	12525	12800	13075	13350	13625	13900	14175	14450	14725	15000	15275	15550	15825	16100
A	I																													
	II																													
	III																													
B	I																													
	II																													
	III																													
C	I	350▮																												
	II																													
	III																													
D	I	245	260	270	285	300	315	330	350	365	385	405	425	445	470	490▮														
	II	310	325	345	365	385	410	430	455▮																					
	III																													
E	I	215	225	235	250	260	270	280	290	300	315	325	340	350	365	375	390	405	420	440	455	470	490	505	525	545	565	585	610	630▮
	II	250	270	285	300	315	330	350	365	380	400	420	435	455	475	500	520	540	565▮											
	III	350	375	400	425	450	480	505	535	565▮																				
F	I	190	200	210	220	230	240	250	260	270	280	290	305	315	325	335	345	355	365	380	390	400	415	425	440	455	470	480	495	510▮
	II	210	225	235	250	265	280	290	305	320	340	355	370	390	405	420	435	455	470	490	510	525	545	565	585	610	630	650	675▮	
	III	280*	290	310	330	350	375	395	420	445	470	495	520	545	575	600	630	660	690▮											

* indicates pressure at heel

▮ Heavy vertical line indicates maximum allowable wall height for particular wall type and particular loading case.

DESIGN EXAMPLES

Example No. 1:

Given: Wall height 6100 mm
1:2 cut slope to be retained. Foundation site investigation indicates lateral pressure from material above will be equivalent to design loading case II condition and an allowable soil bearing capacity of 240 kPa.

Select: Battered Type C or Type D wall. Actual H = 6200 mm. Type D vertical wall can be used by increasing the allowable bearing capacity of the original ground.

Example No. 2:

Given: Wall height 2750 mm
Design Loading Case I (600 mm level ground surcharge plus 11.5 kPa of surcharge) to be retained. Base founded in embankment.

Select: Battered or vertical Type A or Type B wall. Actual H = 2900 mm.

Example No. 3:

Given: Wall height 3050 mm
Design Loading Case III (1:1.5 embankment slope) to be retained. Base in original ground, sloping away from toe of wall at 1:2. Foundation investigation determines the allowable soil bearing capacity is 190 kPa (considering the sloping ground in front of wall).

Select: Battered Type B or Type C wall or Vertical Type C wall. Actual H = 3175 mm

Example No. 4:

Given: Wall height 9150 mm
Design Loading Case II (1:2 embankment slope) to be retained. Base in embankment (1525 mm depth minimum).

Select: Battered Type D, Type E or Type F wall or Vertical Type F wall. Actual H = 9225 mm. For all types the foundation pressure is between 240 and 385 kPa. Embankment material below the wall must be "Structure Backfill" (See Design Example Footnote 1).

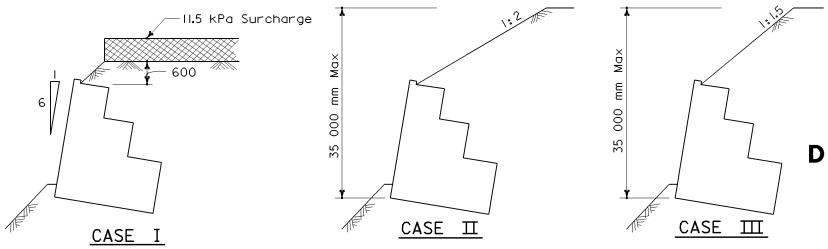

DETAIL OF DESIGN LOADING CASES

DESIGN EXAMPLE FOOTNOTES

1. To constitute a "wall base in embankment" condition, a minimum of 1525 mm of embankment at 95 percent relative compaction is required below the base of the wall. When the foundation pressure is between 240 and 385 kPa, the embankment below the wall shall be constructed with structure backfill material to the limits specified for embankments constructed with relative compaction of 95 percent. The maximum allowable soil bearing capacity is 385 kPa.

2. For walls with "wall base in original ground" condition, the allowable soil bearing capacity, design lateral loads, and slope stability shall be determined by a foundation site investigation and by an analysis. Walls shall not be founded in original ground having an allowable soil bearing capacity of less than 145 kPa.

Caltrans Metric

DIST	COUNTY	ROUTE	KILOMETER POST TOTAL PROJECT	SHEET NO.	TOTAL SHEETS

REGISTERED CIVIL ENGINEER

July 1, 2004
PLANS APPROVAL DATE

REGISTERED PROFESSIONAL ENGINEER Overcomer Y. Hor No. 45803 Exp. 12-31-06 CIVIL STATE OF CALIFORNIA

The State of California or its officers or agents shall not be responsible for the accuracy or completeness of electronic copies of this plan sheet.

To get to the Caltrans web site, go to: http://www.dot.ca.gov

STATE OF CALIFORNIA
DEPARTMENT OF TRANSPORTATION

DESIGN DATA FOR REINFORCED CONCRETE CRIB WALL FOUNDATION PRESSURE-BATTERED WALL

NO SCALE

ALL DIMENSIONS ARE IN MILLIMETERS UNLESS OTHERWISE SHOWN

C7F

2004 Std PLAN C7F

03-26-04

Back to Table of Contents

DIST	COUNTY	ROUTE	KILOMETER POST TOTAL PROJECT	SHEET NO.	TOTAL SHEETS

Caltrans Metric

REGISTERED CIVIL ENGINEER

July 1, 2004
PLANS APPROVAL DATE

REGISTERED PROFESSIONAL ENGINEER Overcomer Y. Hor No. 45803 Exp. 12-31-06 CIVIL STATE OF CALIFORNIA

The State of California or its officers or agents shall not be responsible for the accuracy or completeness of electronic copies of this plan sheet.

To get to the Caltrans web site, go to: http://www.dot.ca.gov

FOUNDATION PRESSURE - VERTICAL WALL

kPa

TYPE	LOADING CASE	WALL HEIGHT 425	700	975	1250	1525	1800	2075	2350	2625	2900	3175	3450	3725	4000	4275	4550	4825	5100	5375	5650	5925	6200	6475	6750	7025	7300	7575	7850	8125
A	I	25 *	30 *	30 *	40	50	65	80	100	120	145 ▮																			
	II	25 *	30 *	35 *	40	50	65	85	105	125	155 ▮																			
	III	30 *	30 *	40	60	80 ▮																								
B	I						55	70	85	100	120	135	155	175 ▮																
	II						60 *	70	90	105	125	150	170 ▮																	
	III						105 *	100	130 ▮																					
C	I									80	95	105	115	130	145	160	175	195	210	230	250	275	300 ▮							
	II									85 *	95	110	125	140	160	180	200	225	250	275 ▮										
	III									140 *	130	150	180	205	235	270 ▮														
D	I															130	145	155	170	180	195	205	220	235	250	270	285	305	320	340
	II															135	155	175	190	210	225	245	265	290	310	335	360	385 ▮		
	III															190 *	210	240	270	295	325	360 ▮								
E	I																			150	165	175	190	200	215	230	240	255	270	280
	II																			165	180	190	210	230	250	270	290	305	325	345
	III																			275 *	280 *	265	290	320	350	380	410	440	470	505
F	I																											225	235	250
	II																											255	270	290
	III																											350	375	405

*Indicates pressure at heel

TYPE	LOADING CASE	8400	8675	8950	9225	9500	9775	10050	10325	10600	10875	11150	11425	11700	11975	12250	12525	12800	13075	13350	13625	13900	14175	14450
A	I																							
	II																							
	III																							
B	I																							
	II																							
	III																							
C	I																							
	II																							
	III																							
D	I	360	385	405 ▮																				
	II																							
	III																							
E	I	295	310	325	340	360	375	395	410	430	450	470	490	510 ▮										
	II	370	390	415	435	460	485	515 ▮																
	III	540 ▮																						
F	I	260	275	290	300	315	330	340	355	370	385	400	415	430	450	465	480	500	520	535	555	575	595	615 ▮
	II	310	330	350	370	385	405	425	450	470	490	515	540	565	590	615	640 ▮							
	III	430	460	490	520	555	585	620	655	690 ▮														

▮ Heavy vertical line indicates maximum allowable wall height for particular wall type and particular loading case.

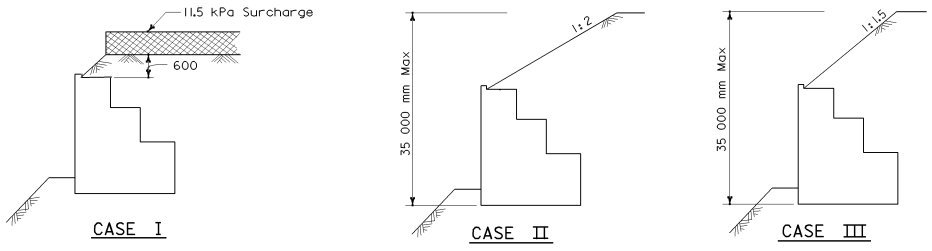

DETAIL OF DESIGN LOADING CASES

STATE OF CALIFORNIA
DEPARTMENT OF TRANSPORTATION

REINFORCED CONCRETE CRIB WALL FOUNDATION PRESSURE-VERTICAL WALL

NO SCALE

ALL DIMENSIONS ARE IN MILLIMETERS UNLESS OTHERWISE SHOWN

C7G

2004 Std PLAN C7G

03-26-04

Back to Table of Contents

DIST	COUNTY	ROUTE	KILOMETER POST TOTAL PROJECT	SHEET NO.	TOTAL SHEETS

REGISTERED CIVIL ENGINEER

July 1, 2004
PLANS APPROVAL DATE

REGISTERED PROFESSIONAL ENGINEER Overcomer Y. Hor No. 45803 Exp. 12-31-06 CIVIL STATE OF CALIFORNIA

The State of California or its officers or agents shall not be responsible for the accuracy or completeness of electronic copies of this plan sheet.

To get to the Caltrans web site, go to: http://www.dot.ca.gov

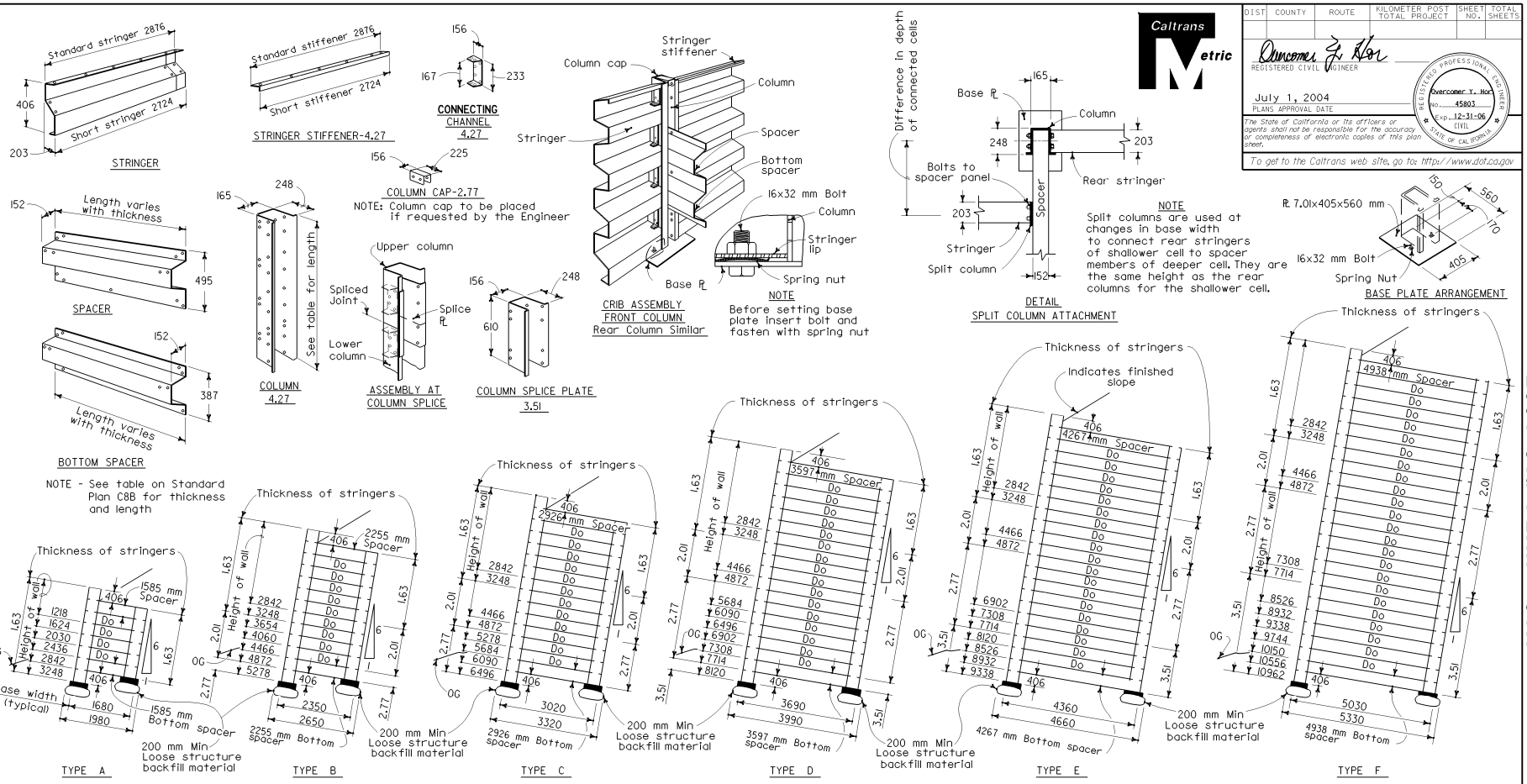

EMBEDMENT DATA		
Wall Type	X	Y
A	600	750
B	750	750
C	900	900
D	1050	900
E	1250	900
F	1400	900

EMBEDMENT DETAIL

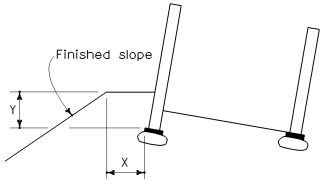

WALL TYPE	h	L
A	76	2022
B	35	2683
C	148	3348
D	259	4015
E	371	4682
F	476	5398

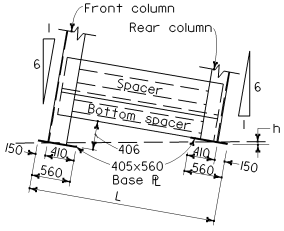

NOTE

Distance h for type A wall is a minus quantity---that is, front column base is lower than rear column base.

All bolts to be 16 millimeters with a minimum length of 32 millimeters

Thickness given in millimeters.

GENERAL NOTES

Design type to be shown on all crib wall layouts.
For design data see Standard Plans C8B and C8C.

LEGEND

Do = Ditto

STATE OF CALIFORNIA
DEPARTMENT OF TRANSPORTATION

STEEL CRIB WALL CONSTRUCTION DETAILS

NO SCALE

ALL DIMENSIONS ARE IN MILLIMETERS UNLESS OTHERWISE SHOWN

C8A

03-26-04

Back to Table of Contents

DIST	COUNTY	ROUTE	KILOMETER POST TOTAL PROJECT	SHEET NO.	TOTAL SHEETS

Caltrans Metric

REGISTERED CIVIL ENGINEER

July 1, 2004
PLANS APPROVAL DATE

REGISTERED PROFESSIONAL ENGINEER Overcomer Y. Hor No. 45803 Exp. 12-31-06 CIVIL STATE OF CALIFORNIA

The State of California or its officers or agents shall not be responsible for the accuracy or completeness of electronic copies of this plan sheet.

To get to the Caltrans web site, go to: http://www.dot.ca.gov

STRINGER MEMBERS REQUIRED PER CELL

WALL HEIGHT	SHORT STRINGERS IN FRONT OF WALL									SHORT STRINGERS IN REAR OF WALL								
	1.63		2.01		2.77		3.51		St'r	1.63		2.01		2.77		3.51		St'd
	St'd	Short	St'd	Short	St'd	Short	St'd	Short	St'r	St'd	Short	St'd	Short	St'd	Short	St'd	Short	St'r
Millimeters	2896	2743	2896	2743	2896	2743	2896	2743	St'f	2896	2743	2896	2743	2896	2743	2896	2743	St'f
1218	1	3							1	3	1							1
1624	2	4							1	4	2							1
2030	3	5							1	5	3							1
2436	4	6							1	6	4							1
2842	5	7							1	7	5							1
3248	6	8							1	8	6							1
3654	6	8							1	8	6							1
4060	6	8	2	2					1	8	6	2	2					1
4466	6	8	3	3					1	8	6	3	3					1
4872	6	8	4	4					1	8	6	4	4					1
5278	6	8	4	4	1	1			1	8	6	4	4	1	1			1
5684	6	8	4	4	2	2			1	8	6	4	4	2	2			1
6090	6	8	4	4	3	3			1	8	6	4	4	3	3			1
6496	6	8	4	4	4	4			1	8	6	4	4	4	4			1
6902	6	8	4	4	5	5			1	8	6	4	4	5	5			1
7308	6	8	4	4	6	6			1	8	6	4	4	6	6			1
7714	6	8	4	4	7	7			1	8	6	4	4	7	7			1
8120	6	8	4	4	7	7	1	1	1	8	6	4	4	7	7	1	1	1
8526	6	8	4	4	7	7	2	2	1	8	6	4	4	7	7	2	2	1
8932	6	8	4	4	7	7	3	3	1	8	6	4	4	7	7	3	3	1
9338	6	8	4	4	7	7	4	4	1	8	6	4	4	7	7	4	4	1
9744	6	8	4	4	7	7	5	5	1	8	6	4	4	7	7	5	5	1
10150	6	8	4	4	7	7	6	6	1	8	6	4	4	7	7	6	6	1
10556	6	8	4	4	7	7	7	7	1	8	6	4	4	7	7	7	7	1
10962	6	8	4	4	7	7	8	8	1	8	6	4	4	7	7	8	8	1

NOTE This table applies only to short panel sections for curved walls and includes stringers for both front and rear of a 2896 millimeter length of wall.

NOTE
This table applies only to standard panel sections and includes stringer members for both front and rear of a 3050 millimeter length of wall.

SPACER MEMBERS REQUIRED PER TRANSVERSE SECTION

WALL HEIGHT	BEARING PLATE	FRONT COLUMN HEIGHT IN MILLIMETERS				REAR COLUMN HEIGHT IN MILLIMETERS				Total Column Length in Millimeters	Column Splice	Column Cap	SPACERS (Thickness & Length)						BOTTOM SPACERS (Thickness & Length)						STRINGER MEMBERS REQUIRED PER CELL: STRINGERS				St'r St'f	WALL HEIGHT
		1st Lift	2nd Lift	3rd Lift	Total Height	1st Lift	2nd Lift	3rd Lift	Total Height				1.63	1.63	2.01	2.77	2.77	2.77	1.63	1.63	2.01	2.77	2.77	2.77	1.63	2.01	2.77	3.51		
Millimeters	405x560												1585	2255	2926	3597	4267	4938	1585	2255	2926	3597	4267	4938	2896	2896	2896	2896	2896	Millimeters
1218	2	1218			1218	406			406	1624		1							1						4				1	1218
1624	2	1624			1624	812			812	2436		1	1						1						6				1	1624
2030	2	2030			2030	1218			1218	3248		1	2						1						8				1	2030
2436	2	2436			2436	1624			1624	4060		1	3						1						10				1	2436
2842	2	2842			2842	2030			2030	4872		1	4						1						12				1	2842
3248	2	3248			3248	2436			2436	5684		1	5	5					1	1					14				1	3248
3654	2	3654			3654	2842			2842	6496		1		6						1					14	2			1	3654
4060	2	2436	1624		4060	3248			3248	7308	1	1		7						1					14	4			1	4060
4466	2	2436	2030		4466	3654			3654	8120	1	1		8	8					1	1				14	6			1	4466
4872	2	2436	2436		4872	2436	1624		4060	8932	2	1		9	9					1	1				14	8			1	4872
5278	2	3654	1624		5278	2436	2030		4466	9744	2	1		10	10					1	1				14	8	2		1	5278
5684	2	3654	2030		5684	2436	2436		4872	10556	2	1			11	11					1	1			14	8	4		1	5684
6090	2	3654	2436		6090	3654	1624		5278	11368	2	1			12	12					1	1			14	8	6		1	6090
6496	2	3654	2842		6496	3654	2030		5684	12180	2	1			13	13					1	1			14	8	8		1	6496
6902	2	3654	3248		6902	3654	2436		6090	12992	2	1				14	14					1	1		14	8	10		1	6902
7308	2	3654	3654		7308	3654	2842		6496	13804	2	1				15	15					1	1		14	8	12		1	7308
7714	2	3654	2436	1624	7714	3654	3248		6902	14616	3	1				16	16					1	1		14	8	14		1	7714
8120	2	3654	2436	2030	8120	3654	3654		7308	15428	3	1				17	17					1	1		14	8	14	2	1	8120
8526	2	3654	2436	2436	8526	3654	2436	1624	7714	16240	4	1					18	18					1	1	14	8	14	4	1	8526
8932	2	3654	3654	1624	8932	3654	2436	2030	8120	17052	4	1					19	19					1	1	14	8	14	6	1	8932
9338	2	3654	3654	2030	9338	3654	2436	2436	8526	17864	4	1					20	20					1	1	14	8	14	8	1	9338
9744	2	3654	3654	2436	9744	3654	3654	1624	8932	18676	4	1						21						1	14	8	14	10	1	9744
10150	2	3654	3654	2842	10150	3654	3654	2030	9338	19488	4	1						22						1	14	8	14	12	1	10150
10556	2	3654	3654	3248	10556	3654	3654	2436	9744	20300	4	1						23						1	14	8	14	14	1	10556
10962	2	3654	3654	3654	10962	3654	3654	2842	10150	21112	4	1						24						1	14	8	14	16	1	10962

NOTES

1. Use Graphs shown on Standard Plan C8C to determine the type of steel crib to use for the various surcharges on both vertical and batter walls.
2. For non-tangent wall alignment, special length stringers may be required.

STATE OF CALIFORNIA
DEPARTMENT OF TRANSPORTATION

STEEL CRIB WALL DESIGN DATA

NO SCALE

ALL DIMENSIONS ARE IN MILLIMETERS UNLESS OTHERWISE SHOWN

C8B

2004 Std PLAN C8B

03-26-04

Back to Table of Contents

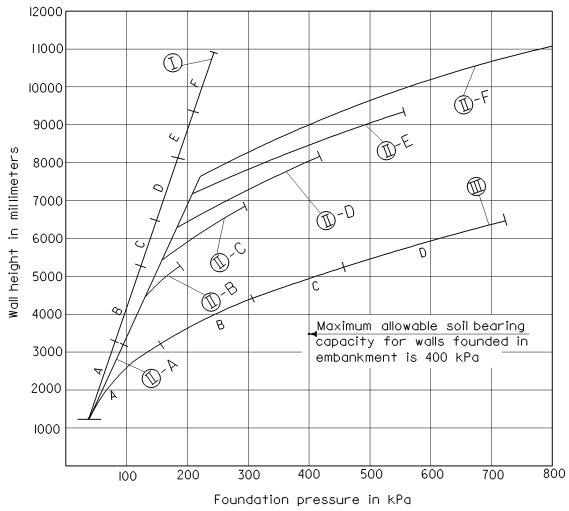

6 : 1 BATTERED WALL

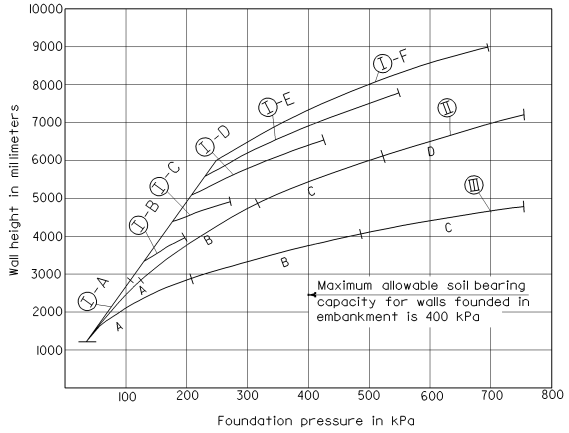

VERTICAL WALL

DESIGN EXAMPLES

EXAMPLE NO. 1

Given: Wall height 7300 millimeters.
Design loading Case II.
35 meters maximum from toe of wall to top of slope.
Base in embankment (1500 millimeters depth minimum).

Select: 6:1 Battered wall. Vertical wall not permitted. Type D wall selected.
Maximum height on graph is 8050 millimeters at 400 kPa. Since the foundation pressure is 305 kPa at 7300 millimeters, the wall must be founded on a 1500 millimeters thickness of "Structure Backfill" (See Design Note 1).
A drainage system behind this wall will be required.

EXAMPLE NO. 2

Given: Wall height 8800 millimeters.
Design loading Case II. Foundation site investigation indicates lateral pressure from material above will be equivalent to 1:2 embankment slope. Base in excavation level at toe of wall.
Foundation investigation determines the allowable soil bearing capacity at 300 kPa.

Select: Battered Type F wall maximum height at 400 kPa is 9000 millimeters, therefore the replacement of 1500 millimeters of excavation with "Structure Backfill" to increase the allowable soil bearing capacity to 400 kPa is required (See Design Note 1). A drainage system for this wall should be investigated.

EXAMPLE NO. 3

Given: Wall height 4600 millimeters.
Design loading Case III with overall height less than 35 millimeters. Base on original ground. Foundation investigation determines allowable soil bearing capacity at 200 kPa.

Select: Use a Type C Battered Wall. However foundation pressure exceeds 200 kPa, therefore the replacement of 1500 millimeters of excavation with "Structure Backfill" to increase the allowable soil bearing capacity to 400 kPa is required (See Design Note 1).

LEGEND FOR GRAPHS

A, B, C, D, E, F = Wall Type
(I), (II), (III) = Loading Case

- For description of loading case, see detail of design loading cases.
- Upper end of line indicates maximum wall height for a given wall type.

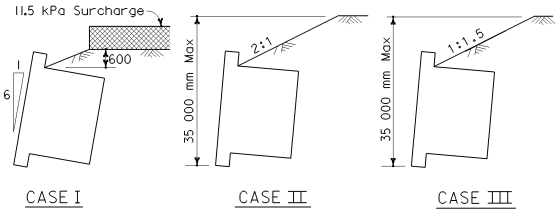

DETAIL OF DESIGN LOADING CASES

Note: Similar loading cases for vertical wall.

NOTE

For construction details see Sheet C8A.

DESIGN NOTES

1. Wall base in embankment: A minimum depth of 1500 millimeters of embankment at 95% relative soil compaction is required below the base of all walls in order to constitute an embankment condition. When the foundation pressure is between 240 and 400 kPa, embankment below the wall shall consist of "Structure Backfill" material as set forth in Section 19-3.06 of the Standard Specifications. The limits of relative compaction (95 percent) shall be as set forth in Section 19-5.03 of the Standard Specifications.

2. Wall base in original ground: Allowable soil pressure at toe of wall shall be determined by foundation site investigation. Walls that are to retain cut slopes shall be designed for lateral and toe pressures determined from site investigation data. Overall stability of slope with wall in place must be analyzed. If original ground slopes away from toe of wall, reduction in allowable bearing capacity due to slope must be considered. Walls shall not be founded in original ground having an allowable bearing capacity of less than 145 kPa. Consideration should be given to removal and replacement of unsuitable material with "Structure Backfill" material as set forth in Section 19-3.06 of the Standard Specifications. The limits of relative compaction (95 percent) shall be as set forth in Section 19-5.03 of the Standard Specifications.

3. Drainage:
   a. Internal: Section 19-3.06 of the Standard Specifications.
   b. External: If the combined height of wall and overfill (measured along face of wall and vertically from the toe of fill to top of fill) exceeds 7600 millimeters a system to drain water away from the back face of wall shall be provided. The type and extent of this system will depend on the type of backfill material expected to be used, the combined height of wall and backfill, and the location of the water table in the area.

4. Sloping Surcharge Limitations: The maximum height of fill behind any wall, or family of walls, shall not exceed 35 meters (measured vertically from the toe of the bottom wall to the top of fill behind the uppermost wall). For a family of walls the slope of a line drawn from the top of the front face of the bottom wall to the top of the front face of any intermediate or top wall, shall in no case be steeper than 1:1.5.

Material Specifications:
Steel sheets:
AASHTO M218
310 275 kPa Ultimate
227 535 kPa Yield
@ 20% Elongation
Bolts: ASTM A307 Grade A

Caltrans Metric

DIST	COUNTY	ROUTE	KILOMETER POST TOTAL PROJECT	SHEET NO.	TOTAL SHEETS

REGISTERED CIVIL ENGINEER
July 1, 2004
PLANS APPROVAL DATE

REGISTERED PROFESSIONAL ENGINEER Overcomer Y. Hor No. 45803 Exp. 12-31-06 CIVIL STATE OF CALIFORNIA

The State of California or its officers or agents shall not be responsible for the accuracy or completeness of electronic copies of this plan sheet.

To get to the Caltrans web site, go to: http://www.dot.ca.gov

STATE OF CALIFORNIA
DEPARTMENT OF TRANSPORTATION

STEEL CRIB WALL DESIGN DATA

NO SCALE

ALL DIMENSIONS ARE IN MILLIMETERS UNLESS OTHERWISE SHOWN

C8C

2004 Std PLAN C8C

03-26-04

Back to Table of Contents

DIST	COUNTY	ROUTE	KILOMETER POST TOTAL PROJECT	SHEET NO.	TOTAL SHEETS

Caltrans Metric

REGISTERED CIVIL ENGINEER

July 1, 2004
PLANS APPROVAL DATE

REGISTERED PROFESSIONAL ENGINEER Overcomer Y. Hor No. 45803 Exp. 12-31-06 CIVIL STATE OF CALIFORNIA

The State of California or its officers or agents shall not be responsible for the accuracy or completeness of electronic copies of this plan sheet.

To get to the Caltrans web site, go to: http://www.dot.ca.gov

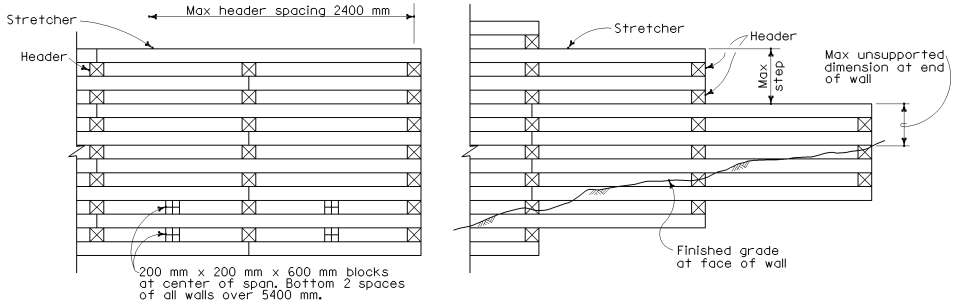

OPEN FACE CRIB PARTIAL ELEVATIONS

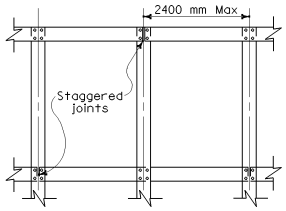

TYPICAL PLAN VIEW

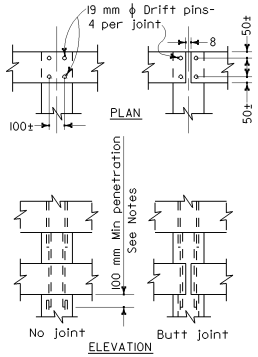

TYPICAL END CONNECTIONS

TIMBER PER 2400 mm CRIB SECTION					
HEIGHT	HEADERS				STRET-
OF WALL	1800	2400	3000	3600	CHERS
1400	3				8
1800	4				10
2200	5				12
2600	4	2			14
3000	5	2			16
3400	5	3			18
3800	5	4			20
4200	5	3	2		22
4600	5	4	2		24
5000	5	4	3		26
5400	5	4	4		28
5800	5	4	3	2	33
6200	5	4	4	2	38
6600	5	4	4	3	43

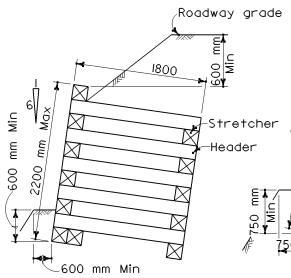

TYPE A

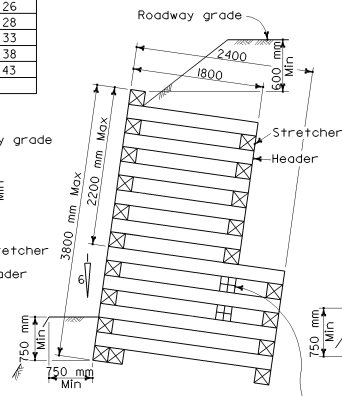

TYPE B

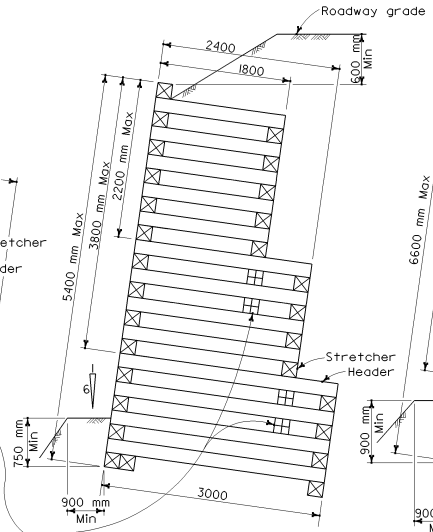

200 mm x 200 mm x 200 mm blocks between headers. Use two courses at each change in crib section. Blocks to be toe-nailed with 2-16d nails.

TYPE C

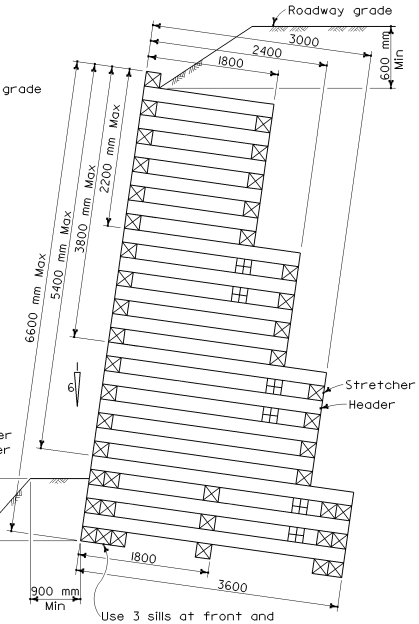

Use 3 sills at front and double sills at rear of walls over 5400 mm high.

TYPE D

NOTES

1. All timber to be treated 200 mm x 200 mm full sawn No. 1 grade douglas fir-larch. All members to be pre-cut before treatment.
2. Drift pins and holes to be 19 mm ϕ.
3. Drift pins to be of sufficient length to penetrate thru 2 members and 100 mm minimum into the third member. Drift pins shall cross each contact joint between headers and stretchers. Pins may lap, provided edge or end distance to pins is not less than 45 mm.
4. All stretchers to be laid horizontal.
5. Vertical walls are not permitted.
6. Maximum allowable height is 6600 mm.
7. All walls 5400 mm high or under shall have double sills at front and single sill at rear. When wall exceeds 2200 mm, 3800 mm, or 5400 mm, use a minimum of two courses of next longer headers.
8. For Design Data see Standard Plan C9B.

STATE OF CALIFORNIA
DEPARTMENT OF TRANSPORTATION

TIMBER CRIB WALL TYPES A, B, C AND D

NO SCALE

ALL DIMENSIONS ARE IN MILLIMETERS UNLESS OTHERWISE SHOWN

C9A

03-26-04

Back to Table of Contents

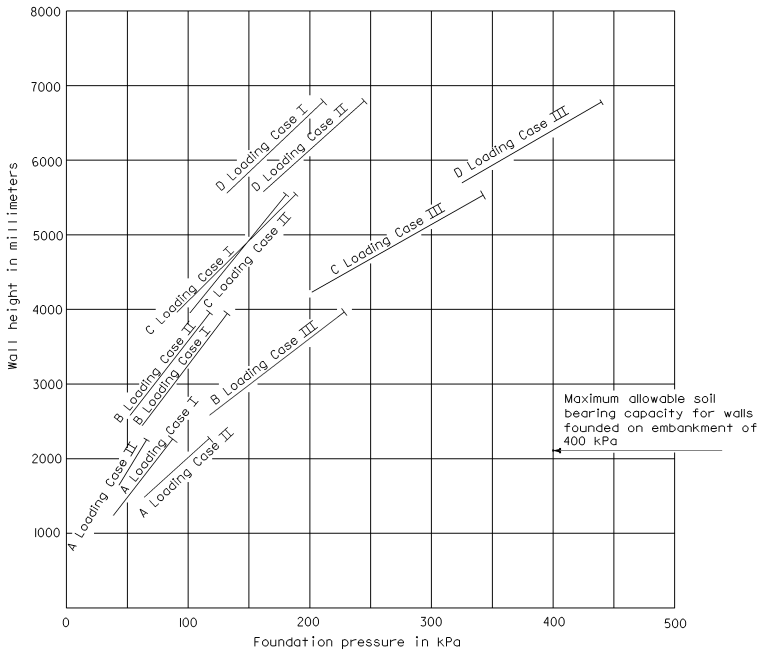

6:1 BATTERED WALL

LEGEND FOR GRAPH

- A, B, C, D = Wall type.
- Solid lines indicate normal range of wall use. Upper end of line indicates maximum wall height for a given wall type and loading.
- For description of loading case see DETAIL OF DESIGN LOADING CASES.

DESIGN NOTES

1. WALL BASE IN EMBANKMENT: A minimum depth of 1500 mm of embankment at 95% relative soil compaction is required below the base of all walls in order to constitute an embankment condition. When the foundation pressure is between 240 kPa and 400 kPa embankment below the wall shall consist of "Structure backfill" material as set forth in Section 19-3.06 of the Standard Specifications. The limits of relative compaction (95%) shall be as set forth in Section 19-5.03 of the Standard Specifications.
2. WALL BASE IN ORIGINAL GROUND: Allowable soil pressure at toe of wall shall be determined by foundation site investigation. Walls that are to retain cut slopes shall be designed for lateral and toe pressures determined from site investigation data. Overall stability of slope with wall in place must be analyzed. If original ground slopes away from toe of wall, reduction in allowable bearing capacity due to slope must be considered. Walls shall not be founded in original ground having an allowable bearing capacity of less than 145 kPa. Consideration should be given to removal and replacement of unsuitable material with "Structure backfill" material as set forth in Section 19-3.06 of the Standard Specifications. The limits of relative compaction (95%) shall be as set forth in Section 19-5.03 of the Standard Specifications.
3. Soil Parameters:
   Backfill - ø = 34°, γ = 19 kN/m^3
   Foundation - ø = 34°
   Lateral earth pressure determined by Rankine Theory.

Caltrans Metric

DIST	COUNTY	ROUTE	KILOMETER POST TOTAL PROJECT	SHEET NO.	TOTAL SHEETS

REGISTERED CIVIL ENGINEER

July 1, 2004
PLANS APPROVAL DATE

REGISTERED PROFESSIONAL ENGINEER Overcomer Y. Hor No. 45803 Exp. 12-31-06 CIVIL STATE OF CALIFORNIA

The State of California or its officers or agents shall not be responsible for the accuracy or completeness of electronic copies of this plan sheet.

To get to the Caltrans web site, go to: http://www.dot.ca.gov

DESIGN EXAMPLES

EXAMPLE NO. 1

Given: Wall height 4200 mm
Design Loading Case II.
Base in embankment (1500 mm depth minimum See Note 1)

Select: 6:1 batter C wall gives 115 kPa foundation pressure.
Vertical Wall not permitted.
See chart for required numbers and sizes of timber members.

EXAMPLE NO. 2

Given: Wall height 5800 mm
Design Loading Case III. Base is in original ground.
Foundation site investigation determines the allowable soil bearing capacity at 300 kPa.

Select: 6:1 batter D wall gives 335 kPa foundation pressure.
Vertical wall not permitted. Since foundation pressure is greater than allowable bearing capacity of native material, replace original material with "Structure backfill" to increase base bearing capacity. (See Note 2)

EXAMPLE NO. 3

Given: Wall height 6600 mm
Design Loading Case II. Base is in embankment.
(See Note 1)

Select: 6:1 batter D wall gives 230 kPa foundation pressure.
Vertical wall not permitted. Foundation pressure is less than 240 kPa. Base material below wall shall be compacted to a relative compaction of 95%. (See Note 1).

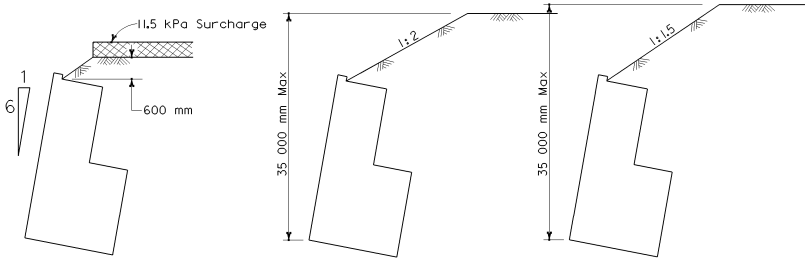

CASE I CASE II CASE III

DETAIL OF DESIGN LOADING CASES

STATE OF CALIFORNIA
DEPARTMENT OF TRANSPORTATION

TIMBER CRIB WALL TYPES A, B, C AND D DESIGN DATA

NO SCALE

ALL DIMENSIONS ARE IN MILLIMETERS UNLESS OTHERWISE SHOWN

C9B

2004 Std PLAN C9B

06-26-04

Back to Table of Contents

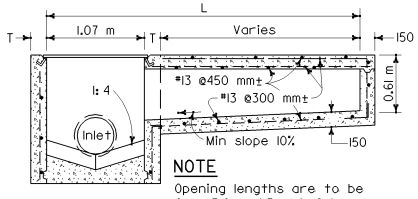

NOTE
Opening lengths are to be 2.1 m, 3.0 m, 4.3 m, & 6.4 m.

SECTION A-A

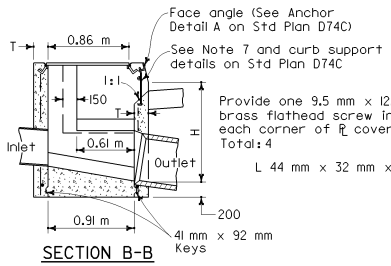

SECTION B-B

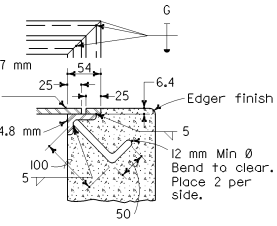

SECTION C-C

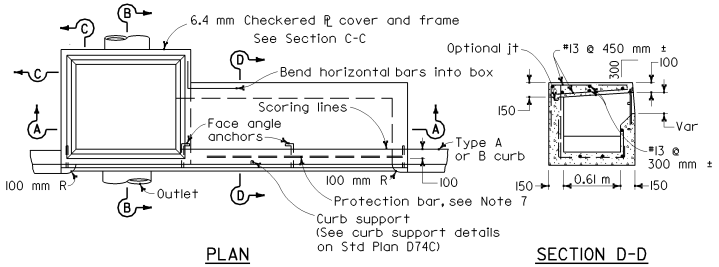

PLAN

SECTION D-D

TYPE OL

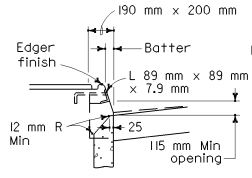

TYPE A CURBS

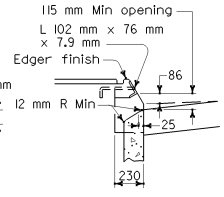

TYPE B CURBS

CURB OPENING DETAILS

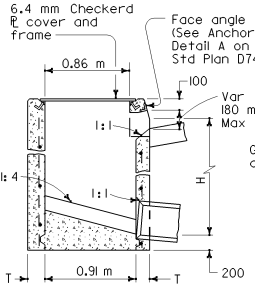

SECTION E-E

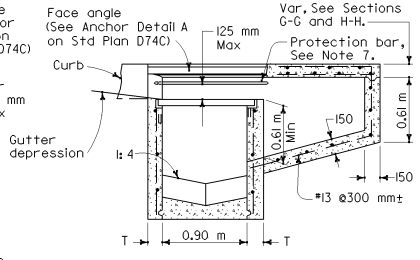

SECTION F-F

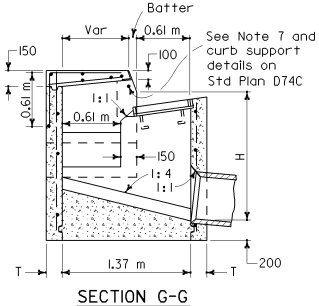

SECTION G-G

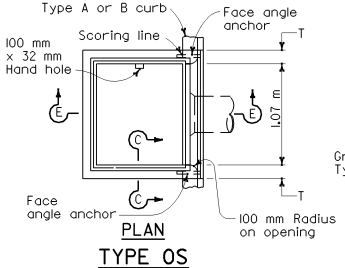

PLAN

TYPE OS

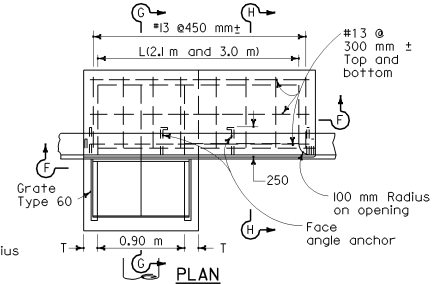

PLAN

TYPE GOL

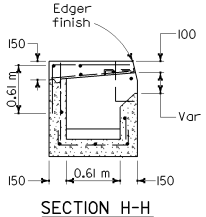

SECTION H-H

NOTES

1. "H" is the difference in elevation between the outlet pipe flow line and the normal gutter grade line undepressed at the curb face.
2. For "T" wall thickness, see Table A below.
3. Height of curb opening will vary with the type of curb and the depth of the local depression.
4. Wall reinforcing not required when "H" is 2.5 m or less and the unsupported width or length is 2.1 m or less. Walls exceeding these limits shall be reinforced with #13 bars @ 450 mm ± centers placed 40 mm clear to inside of box unless otherwise shown.
5. Inlet bottom reinforcing not required. See Standard Plan D74C for alternative reinforced bottom.
6. Steps-None required where "H" is less than 0.75 m. Where "H" is 0.75 m or more, install steps with lowest rung 300 mm above the floor and highest rung not more than 150 mm below top of inlet. The distance between steps shall not exceed 300 mm and be uniform throughout the length of the wall. Place steps in the wall without an opening. Step inserts may be substituted for the bar steps. Step inserts shall comply with State Industrial Safety requirements. See Standard Plan D74C for step details.
7. When shown on the project plans, place a 19 mm plain round protection bar horizontally across the length of the opening and bend back 100 mm into the inlet wall on each side.
8. Pipe(s) can be placed in any wall.
9. Curb section shall match adjacent curb.
10. Except for inlets used as junction boxes, basin floor shall have a minimum slope of 1:4 from all directions toward outlet pipe and shall have a wood trowel finish.
11. Galvanizing-See Standard Specifications or Special Provisions.
12. See Standard Plans D77A and D77B for grate and frame details and masses of miscellaneous iron and steel.
13. See Standard Plan D78 for gutter depression details.
14. Full penetration butt welds may be substituted for the fillet welds on all anchors.
15. Standard square, hexagon, round or equivalent headed anchors may be substituted for the right angle hooks on the anchors shown on this plan.
16. Cast-in-place or precast alternative is optional with contractor. See Standard Specifications.
17. Cast-in-place inlets to be formed around all pipes/stubs intersecting the inlet, and concrete poured in one continuous operation. Precast inlets shall have mortared connections conforming to details for Type GCP inlet shown on Standard Plan D75B. See Standard Specifications for mortar composition.

TABLE A

CONCRETE QUANTITIES				
Type	H=0.90 m to 2.50 m (T=150 mm)		H=2.51m to 6.00 m (T=200 mm)	
	H=0.90 m (m^3)	Additional PCC per meter (m^3)	H=2.51 m (m^3)	Additional PCC per meter (m^3)
OS	1.04	0.69	2.91	0.96
OL-2.1	1.42	0.69	3.28	0.96
OL-3.0	1.77	0.69	3.65	0.96
OL-4.3	2.26	0.69	4.17	0.96
OL-6.4	3.33 *	0.69	5.18	0.96
GOL-2.1	1.72	0.78	3.79	1.07
GOL-3.0	2.10	0.78	4.18	1.07

*Based on H=0.95 m

Table based on 200 mm floor slab, no deduction for pipe openings, 180 mm curb openings, and curb type giving highest quantity of concrete. No deductions or adjustments are to be made to these quantities because of pipe openings, different floor alternatives, different curb types or different height of curb openings.

Caltrans Metric

DIST	COUNTY	ROUTE	KILOMETER POST TOTAL PROJECT	SHEET NO.	TOTAL SHEETS

REGISTERED CIVIL ENGINEER
July 1, 2004
PLANS APPROVAL DATE
REGISTERED PROFESSIONAL ENGINEER Glenn DeCou No. C34547 Exp. 9-30-05 CIVIL STATE OF CALIFORNIA

The State of California or its officers or agents shall not be responsible for the accuracy or completeness of electronic copies of this plan sheet.

To get to the Caltrans web site, go to: http://www.dot.ca.gov

STATE OF CALIFORNIA
DEPARTMENT OF TRANSPORTATION

DRAINAGE INLETS

NO SCALE

ALL DIMENSIONS ARE IN MILLIMETERS UNLESS OTHERWISE SHOWN

D72

05-12-04

Back to Table of Contents

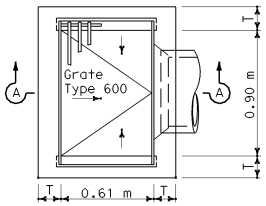

TYPE G1

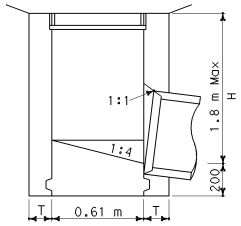

SECTION A-A

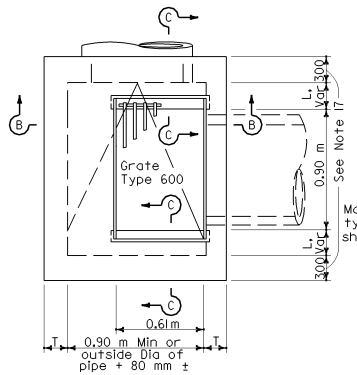

TYPE G2

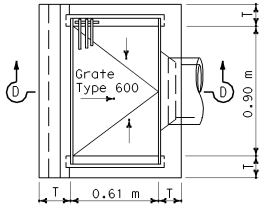

TYPE G3

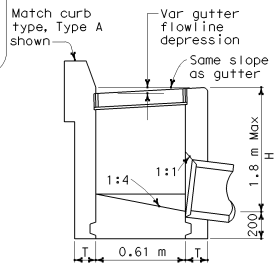

SECTION D-D

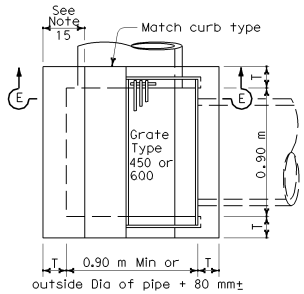

TYPE G4

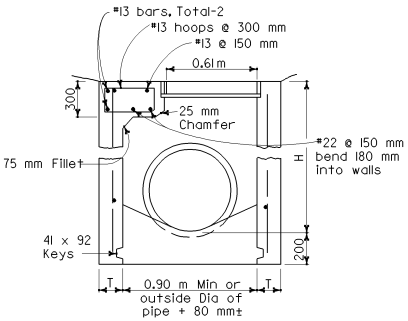

SECTION B-B

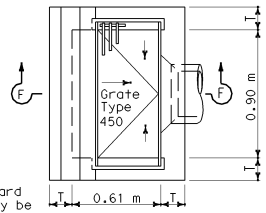

TYPE G5

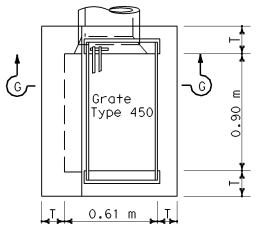

TYPE G6

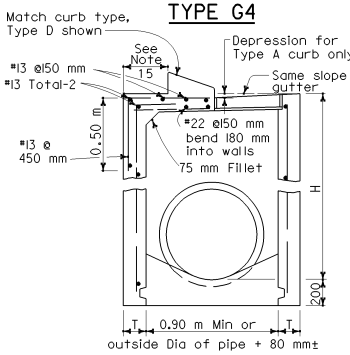

SECTION E-E

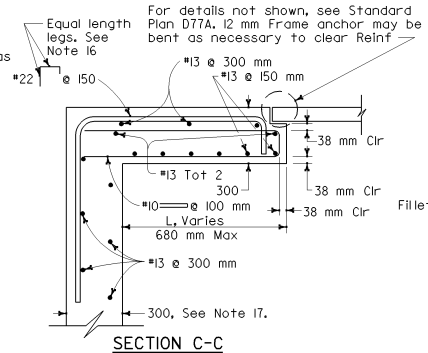

SECTION C-C

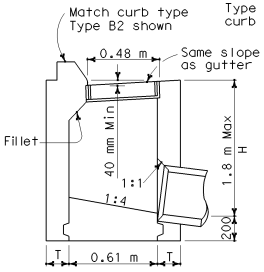

SECTION F-F

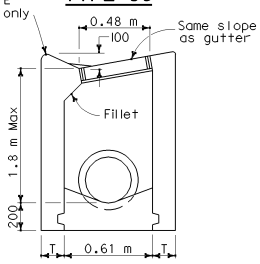

SECTION G-G

NOTES

1. "H" is the difference in elevation between the outlet pipe flow line and the normal gutter grade line undepressed.
2. For "T" wall thickness, see Table A below.
3. Wall reinforcing not required when "H" is 2.5 m or less and the unsupported width or length is 2.1 m or less. Walls exceeding these limits shall be reinforced with #13 bars @ 450 mm ± centers placed 40 mm clear to inside of box unless otherwise shown.
4. Inlet bottom reinforcing not required. See Standard Plan D74C for alternative reinforced bottom and alternative half round bottom.
5. Steps-None required where "H" is less than 0.75 m. Where "H" is 0.75 m or more, install steps with lowest rung 300 mm above the floor and highest rung not more than 150 mm below top of inlet. The distance between steps shall not exceed 300 mm and shall be uniform throughout the length of the wall. Place steps in the wall without an opening. Steps inserts may be substituted for the bar steps. Step inserts shall comply with State Industrial Safety requirements. See Standard Plan D74C for step details.
6. Details shown apply to both metal and concrete pipe.
7. Pipe(s) can be placed in any wall.
8. Curb section shall match adjacent curb.
9. Basin floors shall have wood trowel finish and a minimum slope of 1:4 from all directions toward outlet pipe.
10. Galvanizing-See Standard Specifications or Special Provisions.
11. Cast-in-place or Precast alternative is optional with contractor, See Standard Specifications.
12. Set inlet so that grate bars are parallel to direction of principal surface flow.
13. See Standard Plans D77A and D77B for grate and frame details and masses of miscellaneous iron and steel.
14. See Standard Plan D78 for gutter depression details.
15. This dimenison will vary with different grates, curbs types, box width and wall thickness.
16. Bar may be rotated as necessary to clear opening. Where "L" is 150 mm or less, bar may be omitted.
17. Where "L" is 150 mm or less, wall thickness shall be as shown in Table A.
18. Cast-in-place inlets to be formed around all pipes/stubs intersecting the inlet, and concrete poured in one continuous operation. Precast inlets shall have mortared connections conforming to details for Type GCP inlet shown on Standard Plan D75B. See Standard Specifications for mortar composition.

Caltrans Metric

DIST	COUNTY	ROUTE	KILOMETER POST TOTAL PROJECT	SHEET NO.	TOTAL SHEETS

REGISTERED CIVIL ENGINEER

July 1, 2004
PLANS APPROVAL DATE

REGISTERED PROFESSIONAL ENGINEER Glenn DeCou No. C34547 Exp. 9-30-05 CIVIL STATE OF CALIFORNIA

The State of California or its officers or agents shall not be responsible for the accuracy or completeness of electronic copies of this plan sheet.

To get to the Caltrans web site, go to: http://www.dot.ca.gov

TABLE A

CONCRETE QUANTITIES				
Type	H=0.90 m to 2.50 m (T=150 mm)		H=2.51m to 6.00 m (T=200 mm)	
	H=0.90 m (m3)	Additional PCC per meter (m3)	H=2.51m (m3)	Additional PCC per meter (m3)
G-1	0.69	0.55	(1)	(1)
G-2*	1.01	0.63	3.32	1.14
G-3	0.75	0.55	(1)	(1)
G-4* (Type 600)	0.93	0.63	2.67	0.88
G-4* (Type 450)	0.95	0.63	2.69	0.88
G-5	0.75	0.55	(1)	(1)
G-6	0.76	0.55	(1)	(1)

(1) Maximum allowable height 1.8 m. Table based on 200 mm floor slab. No deductions are to be made to these quantities because of pipe openings, different floor alternatives or different curb types. * Quantities for Type G-2 and G-4 inlets based on the minimum interior dimensions shown.

STATE OF CALIFORNIA
DEPARTMENT OF TRANSPORTATION

DRAINAGE INLETS

NO SCALE

ALL DIMENSIONS ARE IN MILLIMETERS UNLESS OTHERWISE SHOWN

D73

05-12-04

Back to Table of Contents

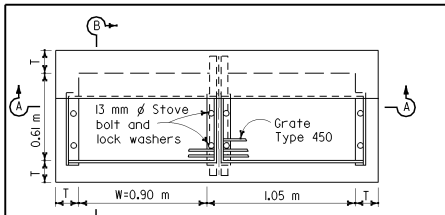

PLAN

TYPE GTI

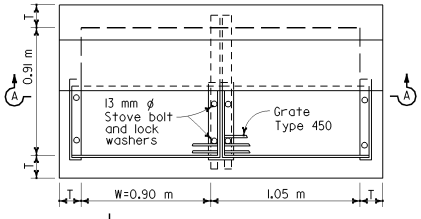

PLAN

TYPE GT2

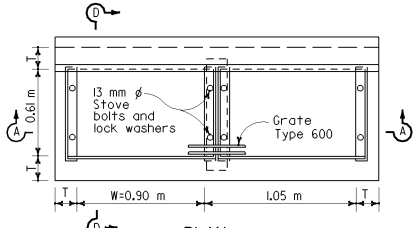

PLAN

TYPE GT3

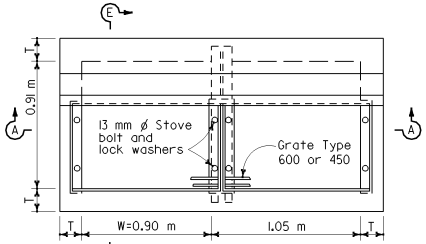

PLAN

TYPE GT4

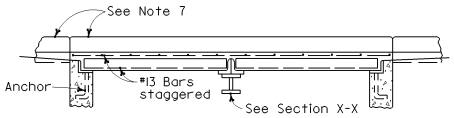

SECTION A-A

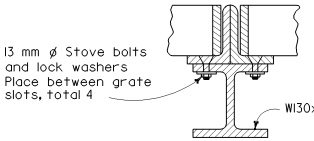

SECTION X-X

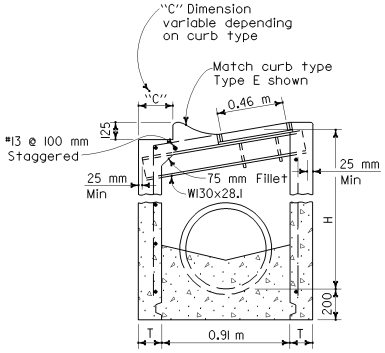

SECTION C-C

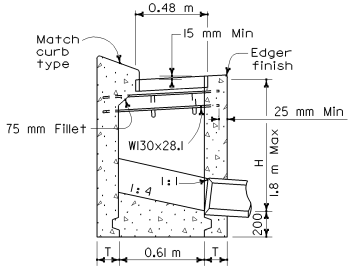

SECTION B-B

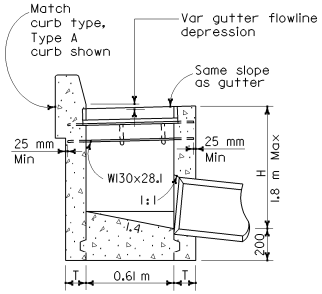

SECTION D-D

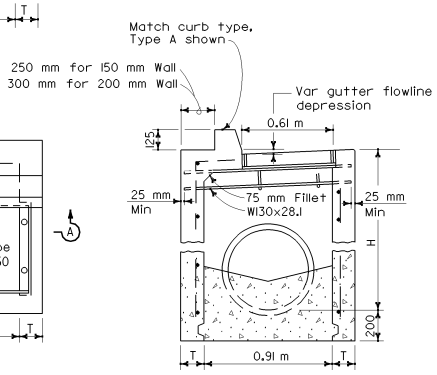

SECTION E-E

TABLE A

CONCRETE QUANTITIES				
	H=0.90 m TO 2.50 m (T=150 mm)		H=2.51 m TO 6.00 m (T=200 mm)	
TYPE	H=0.90 m (m^3)	ADDITIONAL PCC PER METER (m^3)	H=2.51 m	ADDITIONAL PCC PER METER (m^3)
GTI	1.28	0.87	(1)	(1)
GT2	1.55	0.96	4.08	1.31
GT3	1.27	0.87	(1)	(1)
GT4	1.60	0.96	4.09	1.31

(1) Maximum allowable height = 1.8 m

Table based on 200 mm floor slab, no deduction for pipe openings, and curb type giving highest quantity of concrete.

No deductions or adjustments are to be made to these quantities because of pipe openings, different floor alternatives or different curb type.

Caltrans Metric

DIST	COUNTY	ROUTE	KILOMETER POST TOTAL PROJECT	SHEET NO.	TOTAL SHEETS

REGISTERED CIVIL ENGINEER

July 1, 2004

PLANS APPROVAL DATE

REGISTERED PROFESSIONAL ENGINEER Glenn DeCou No. C34547 Exp. 9-30-05 CIVIL STATE OF CALIFORNIA

The State of California or its officers or agents shall not be responsible for the accuracy or completeness of electronic copies of this plan sheet.

To get to the Caltrans web site, go to: http://www.dot.ca.gov

NOTES

1. "H" is the difference in elevation between the outlet pipe flow line and the normal gutter grade line undepressed.
2. For "T" wall thickness, see Table A below.
3. Wall reinforcing not required when "H" is 2.5 m or less and the unsupported width or length is 2.1 m or less. Walls exceeding these limits shall be reinforced with #13 bars @ 450 mm± centers placed 40 mm clear to inside of box unless otherwise shown
4. Inlet bottom reinforcing not required. See Standard Plan D74C for alternative reinforced bottom.
5. Steps - None required where "H" is less than 0.75 m. Where "H" is 0.75 m or more, install steps with lowest rung 300 mm above the floor and highest rung not more than 150 mm below top of inlet. The distance between steps shall not exceed 300 mm and shall be uniform throughout the length of the wall. Place steps in the wall without an opening. Step inserts may be substituted for the bar steps. Step inserts shall comply with State Industrial Safety requirement. See Standard Plan D74C for step details.
6. Pipe(s) can be placed in any wall.
7. Curb section shall match adjacent curb.
8. Basin floors shall have wood trowell finish and a minimum slope of 1:4 from all directions toward outlet pipe.
9. Galvanizing - See Standard Specifications or Special Provisions.
10. W = 0.90 m for one grate. Add 1.05 m for additional grates in tandem.
11. See Standard Plans D77A and D77B for grate and frame details and masses of miscellaneous iron and steel.
12. See Standard Plan D78 for gutter depression details.
13. Full penetration butt welds may be substituted for the fillet welds on all anchors.
14. Standard square, hexagon, round or equivalent headed anchors may be substituted for the right angle hooks on the anchors shown on this plan.
15. Cast-in-place or precast alternative is optional with contractor. See Standard Specifications.
16. Cast-in-place inlets to be formed around all pipes/stubs intersecting the inlet and concrete poured in one continuous operation. Precast inlets shall have mortared pipe connections conforming to details for Type GCP inlet on Standard Plan D75B. See Standard Specifications for mortar comoposition.

STATE OF CALIFORNIA
DEPARTMENT OF TRANSPORTATION

DRAINAGE INLETS

NO SCALE

ALL DIMENSIONS ARE IN MILLIMETERS UNLESS OTHERWISE SHOWN

D74A

05-12-04

Back to Table of Contents

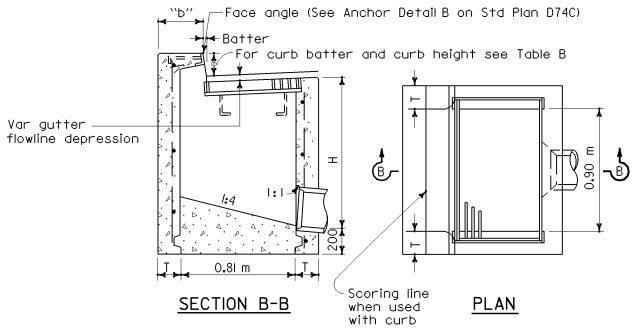

SECTION B-B PLAN

TYPE GO

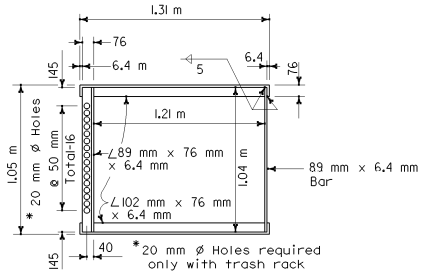

GRATE FRAME FOR TYPE GDO INLET

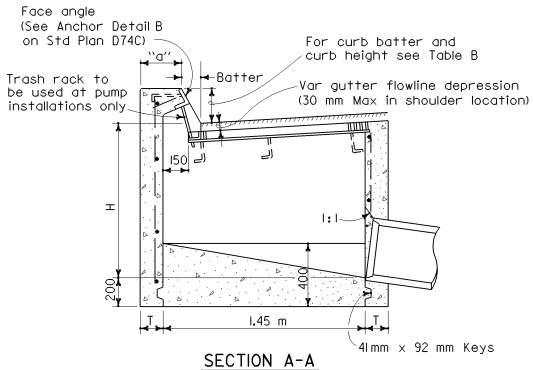

SECTION A-A

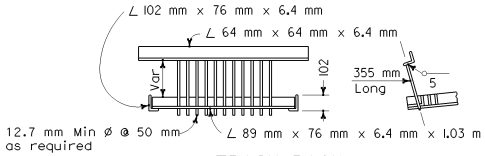

TRASH RACK

(For use with pump installation)

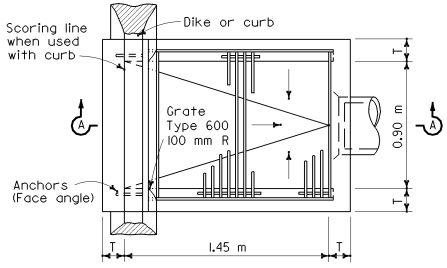

PLAN

TYPE GDO

TABLE B

CURB TYPE	NORMAL CURB HEIGHT	CURB BATTER	"a" DIMENSION	"b" DIMENSION
A-150	150	40	T+190	T+160
A-200	200	50	T+180	T+150
B	150	100	T+130	T+100
"A" Dike	150	75	T+155	T+125

TABLE A

CONCRETE QUANTITIES				
	H=0.90 m TO 2.50 m (T=150 mm)		H=2.51m TO 6.00 m (T=200 mm)	
TYPE	H=0.90 m (m^3)	ADDITIONAL PCC PER METER (m^3)	H=2.51m (m^3)	ADDITIONAL PCC PER METER (m^3)
GO	0.91	0.61	2.57	0.86
GDO	1.21	0.80	3.33	1.11

Table based on 200 mm floor slab, no deduction for pipe openings, and curb type giving highest quantity of concrete. No deductions or adjustments are to be made to these quantities because of pipe openings, different floor alternatives or different curb type.

Caltrans Metric

DIST	COUNTY	ROUTE	KILOMETER POST TOTAL PROJECT	SHEET NO.	TOTAL SHEETS

REGISTERED CIVIL ENGINEER

July 1, 2004
PLANS APPROVAL DATE

REGISTERED PROFESSIONAL ENGINEER Glenn DeCou No. C34547 Exp. 9-30-05 CIVIL STATE OF CALIFORNIA

The State of California or its officers or agents shall not be responsible for the accuracy or completeness of electronic copies of this plan sheet.

To get to the Caltrans web site, go to: http://www.dot.ca.gov

NOTES

1. "H" is the difference in elevation between the outlet pipe flow line and the normal gutter grade line undepressed.
2. For "T" wall thickness, see Table A below.
3. Wall reinforcing not required when "H" is 2.5 m or less and the unsupported width or length is 2.1 m or less. Walls exceeding these limits shall be reinforced with #13 bars @ 450 mm± centers placed 40 mm clear to inside of box unless otherwise shown.
4. Inlet bottom reinforcing not required. See Standard Plan D74C for alternative reinforced bottom.
5. Steps - None required where "H" is less than 0.75 m. Where "H" is 0.75 m or more, install steps with lowest rung 300 mm above the floor and highest rung not more than 150 mm below top of inlet. The distance between steps shall not exceed 300 mm and shall be uniform throughout the length of the wall. Place steps in the wall without an opening. Step inserts may be substituted for the bar steps. Step inserts shall comply with State Industrial Safety requirements. See Standard Plan D74C for step details.
6. When shown on the project plans, place a 19 mm plain round protection bar horizontally across the length of the opening and bend back 100 mm into the inlet wall on each side.
7. Pipe(s) can be placed in any wall.
8. Curb section shall match adjacent curb.
9. Basin floors shall have wood trowel finish and shall slope toward the outlet pipe as shown.
10. Galvanizing - See Standard Specifications or Special Provisions.
11. See Standard Plan D77A and D77B for grate and frame details and masses of miscellaneous iron and Steel.
12. See Standard Plan D78 for gutter depression details.
13. Full penetration butt welds may be substituted for the fillet welds on all anchors.
14. Standard square, hexagon, round or equivalent headed anchors may be substituted for the right angle hooks on the anchors shown on this plan.
15. Cast-in-place or precast alternative is optional with contractor. See Standard Specifications.
16. Cast-in-place inlets to be formed around all pipes/stubs intersecing the inlet and concrete poured in one continuous operation. Precast inlets shall have mortared pipe connections conforming to details for Type GCP inlets on Standard Plan D75B. See Standard Specifications for mortar composition.

STATE OF CALIFORNIA
DEPARTMENT OF TRANSPORTATION

DRAINAGE INLETS

NO SCALE

ALL DIMENSIONS ARE IN MILLIMETERS UNLESS OTHERWISE SHOWN

D74B

05-12-04

Back to Table of Contents

DIST	COUNTY	ROUTE	KILOMETER POST TOTAL PROJECT	SHEET NO.	TOTAL SHEETS

Caltrans Metric

REGISTERED CIVIL ENGINEER

July 1, 2004
PLANS APPROVAL DATE

REGISTERED PROFESSIONAL ENGINEER Glenn DeCou No. C34547 Exp. 9-30-05 CIVIL STATE OF CALIFORNIA

The State of California or its officers or agents shall not be responsible for the accuracy or completeness of electronic copies of this plan sheet.

To get to the Caltrans web site, go to: http://www.dot.ca.gov

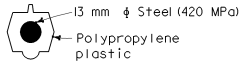

TYPICAL SECTION
(STEP INSERT)

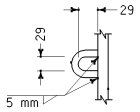

STIRRUP

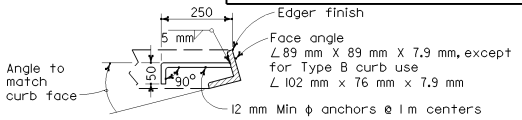

FACE ANGLE ANCHOR DETAIL A

FACE ANGLE DETAIL A	
Length of Curb Opening	No of Anchors
1.1 m or Less	2
2.1 m	3
3.0 m	4
4.3 m	5
6.4 m	7

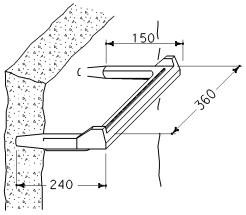

STEP INSERT

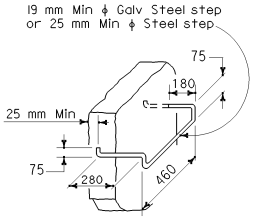

BAR STEP

STEP DETAILS

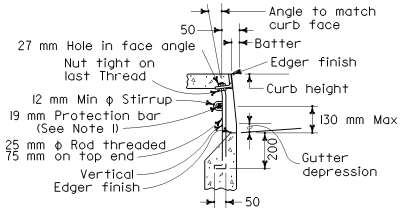

CURB SUPPORT DETAIL
See Note 2

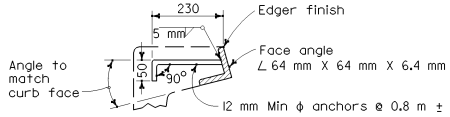

FACE ANGLE ANCHOR DETAIL B

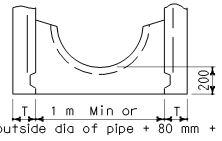

ALTERNATIVE
HALF ROUND BOTTOM

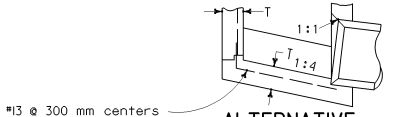

ALTERNATIVE
REINFORCED BOTTOM

NOTES

1. When shown on the project plans, place a 19 mm plain round protection bar horizontally across length of the opening and bend back 100 mm into the inlet wall on each side.

2. Curb supports shall be evenly spaced and minimal in number such that maximum span of unsupported curb is 2.1 m.

STATE OF CALIFORNIA
DEPARTMENT OF TRANSPORTATION

DRAINAGE INLET DETAILS

NO SCALE

ALL DIMENSIONS ARE IN MILLIMETERS UNLESS OTHERWISE SHOWN

D74C

2004 Std PLAN D74C

05-04-04

Back to Table of Contents

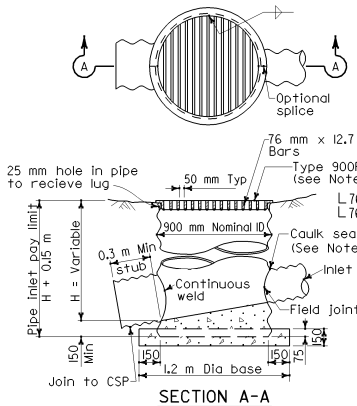

SECTION A-A

TYPE GMP

STEEL PIPE INLET WITH GRATE

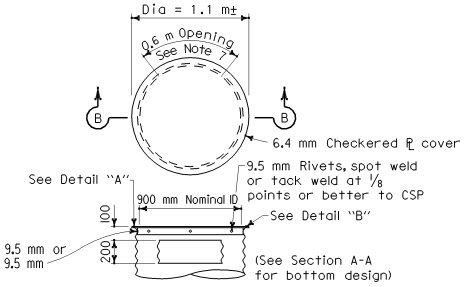

SECTION B-B

TYPE OMP or OMPI

STEEL PIPE INLET WITH SIDE OPENING AND STEEL COVER (See Note 6)

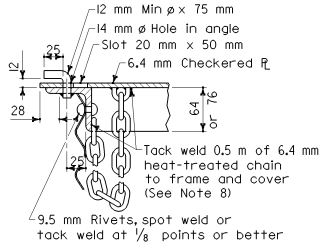

DETAIL "A"

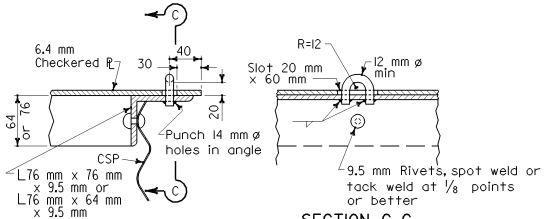

DETAIL "B"

SECTION C-C

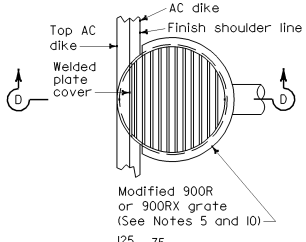

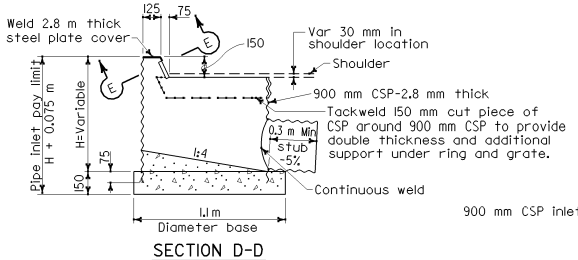

SECTION D-D

TYPE ODI

STEEL PIPE INLET WITH GRATE AND RAISED OPENING AT AC DIKE FLOWLINE

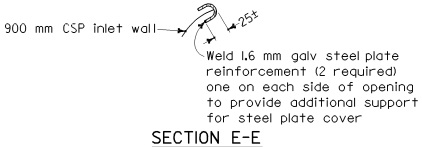

SECTION E-E

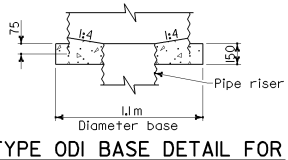

TYPE ODI BASE DETAIL FOR PIPE RISER CONNECTION

NOTES

1. For Details of concrete pipe inlets, see New Standard Plan NSP D75B.
2. For details of ladder and steps and when ladder or steps are required, see Standard Plan D75C.
3. Inlet pipes shall not protrude into basin.
4. Except for inlets used for junction boxes, basin floors shall have minimum slope of 1:4 from all directions toward outlet pipe, and a wood trowel finish.
5. See Standard Plans D77A and D77B for Grate and Frame Details and mass of Miscellaneous Iron and Steel.
6. Designation of Type OMPI pipe inlets on plans indicates trash racks are to be furnished and installed on all side openings. See Standard Plan D75C for trash rack details
7. More than one side opening may be required. Location and number as ordered by the Engineer.
8. Chain to be provided when specified.
9. Caulk seal with pliable mixture of sand, portland cement, and emulsified asphalt (Mixture of 1 part portland cement, 3-5 parts sand, and 1½ parts SS1 emulsified asphalt.)
10. Place pipe so bars of grate will be parallel with main surface flow.

Caltrans Metric

DIST	COUNTY	ROUTE	KILOMETER POST TOTAL PROJECT	SHEET NO.	TOTAL SHEETS

REGISTERED CIVIL ENGINEER

July 1, 2004
PLANS APPROVAL DATE

REGISTERED PROFESSIONAL ENGINEER Glenn DeCou No. C34547 Exp. 9-30-05 CIVIL STATE OF CALIFORNIA

The State of California or its officers or agents shall not be responsible for the accuracy or completeness of electronic copies of this plan sheet.

To get to the Caltrans web site, go to: http://www.dot.ca.gov

STATE OF CALIFORNIA
DEPARTMENT OF TRANSPORTATION

PIPE INLETS

NO SCALE

ALL DIMENSIONS ARE IN MILLIMETERS UNLESS OTHERWISE SHOWN

D75A

03-26-04

Back to Table of Contents

DIST	COUNTY	ROUTE	KILOMETER POST TOTAL PROJECT	SHEET NO.	TOTAL SHEETS

Caltrans Metric

REGISTERED CIVIL ENGINEER

July 1, 2004
PLANS APPROVAL DATE

REGISTERED PROFESSIONAL ENGINEER Glenn DeCou No. C34547 Exp. 9-30-05 CIVIL STATE OF CALIFORNIA

The State of California or its officers or agents shall not be responsible for the accuracy or completeness of electronic copies of this plan sheet.

To get to the Caltrans web site, go to: http://www.dot.ca.gov

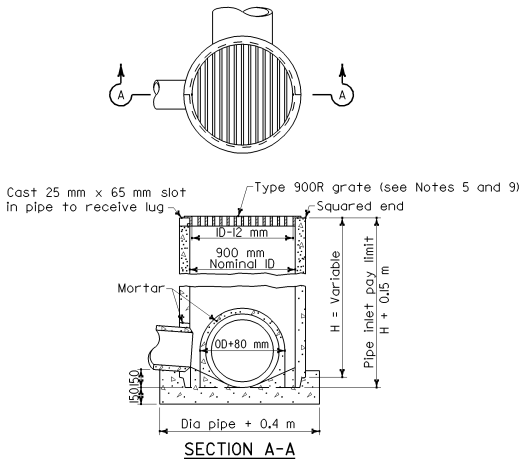

SECTION A-A

TYPE GCP

CONCRETE PIPE INLET WITH GRATE

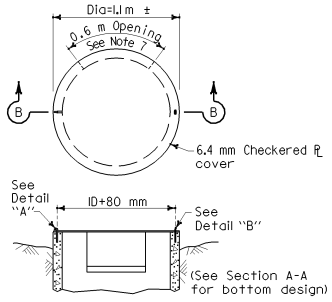

SECTION B-B

TYPE OCP or OCPI

CONCRETE PIPE INLET WITH STEEL COVER
(See Note 6)

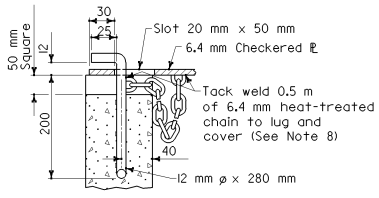

DETAIL "A"

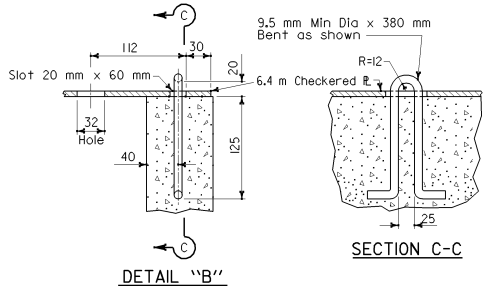

DETAIL "B"

SECTION C-C

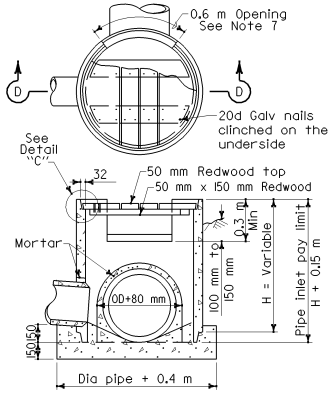

SECTION D-D

TYPE OCP or OCPI

CONCRETE PIPE INLET WITH REDWOOD COVER
(See Notes 6 and 10)

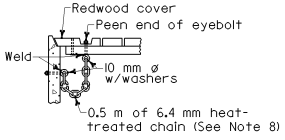

DETAIL "C"

NOTES

1. For details of steel pipe inlets, see New Standard Plan NSP D75A.
2. For details of ladder and steps and when ladder or steps are required, see New Standard Plan NSP D75C.
3. Inlet pipes shall not protrude into basin.
4. Except for inlets used for junction boxes, basin floors shall have minimum slope of 1:4 from all directions toward outlet pipe, and a wood trowel finish.
5. See Standard Plans D77A and D77B for Grate and Frame Details and Weights of Miscellaneous Iron and Steel.
6. Designation of Type OCPI pipe inlets on plans indicates trash racks are to be furnished and installed on all side openings. See Standard Plan D75C for Trash Rack details.
7. More than one side opening may be required. Location and number as ordered by the Engineer. Opening may be cast in pipe.
8. Chain to be provided when specified.
9. Place pipe so bars of grate will be parallel with main surface flow.
10. Redwood covers not to be used where there is a possibility of wheelloads.

STATE OF CALIFORNIA
DEPARTMENT OF TRANSPORTATION

PIPE INLETS

NO SCALE

ALL DIMENSIONS ARE IN MILLIMETERS UNLESS OTHERWISE SHOWN

D75B

05-04-04

Back to Table of Contents

DIST	COUNTY	ROUTE	KILOMETER POST TOTAL PROJECT	SHEET NO.	TOTAL SHEETS

Caltrans Metric

REGISTERED CIVIL ENGINEER

July 1, 2004
PLANS APPROVAL DATE

REGISTERED PROFESSIONAL ENGINEER Glenn DeCou No. C34547 Exp. 9-30-05 CIVIL STATE OF CALIFORNIA

The State of California or its officers or agents shall not be responsible for the accuracy or completeness of electronic copies of this plan sheet.

To get to the Caltrans web site, go to: http://www.dot.ca.gov

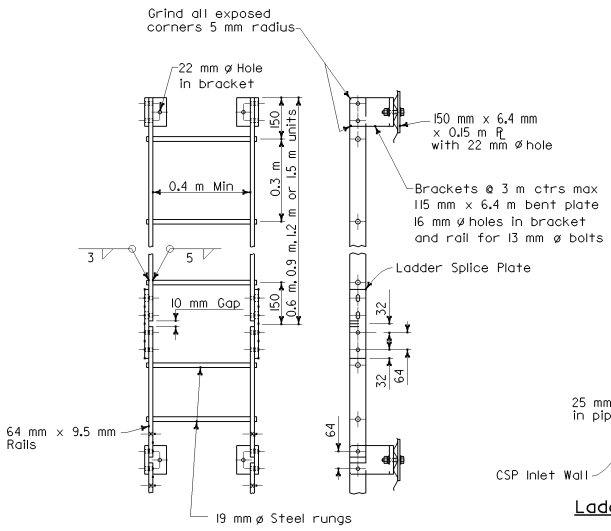

LADDER DETAILS

See Notes 1, 2, 3, 4 and 6

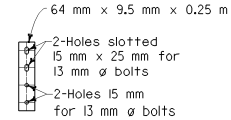

Ladder Splice Plate

(See Notes 4 and 6)

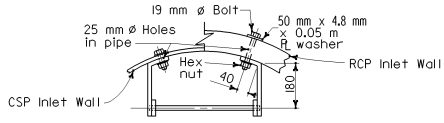

Ladder Connection to Inlet

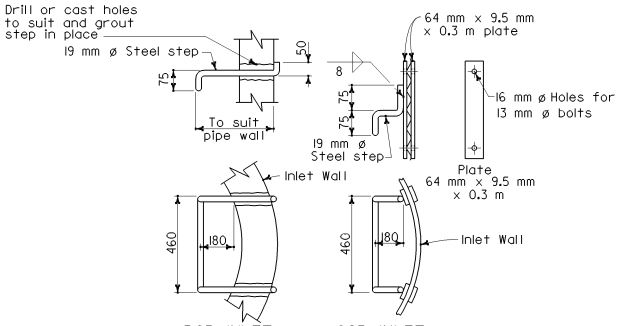

RCP INLET CSP INLET

STEP DETAILS

(See Notes 1 and 6)

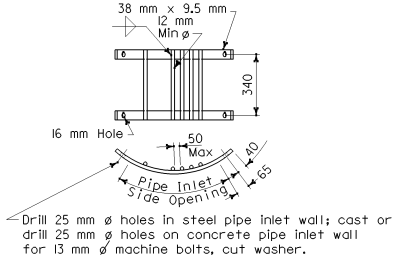

TRASH RACK DETAILS

(See Notes 5 and 6)

NOTES

1. Ladders and Steps - None required where "H" dimension of pipe inlet is less than 0.75 m. Where "H" is 0.75 m or more, install steps or ladder with lowest rung not more than 0.3 m above the floor and highest rung not more than 0.3 m below top of inlet. The distance between steps or rungs shall not exceed 0.3 m and shall be uniform throughout the length of the wall. Place steps or ladder in the wall without an opening.
2. Ladder may be constructed in one length at contractor's option on RCP inlet.
3. On CSP inlet, connect ladder splice plate so joint can compress 10 mm.
4. Ladder splice plate to be connected with 13 mm ø bolts with double nuts.
5. Trash racks used on Type OCPI and OMPI inlets. Trash racks required for pumping installations.
6. All hardware to be galvanized after fabrication. See Standard Specifications or Special Provisions.

STATE OF CALIFORNIA
DEPARTMENT OF TRANSPORTATION

PIPE INLETS

NO SCALE

ALL DIMENSIONS ARE IN MILLIMETERS UNLESS OTHERWISE SHOWN

D75C

2004 Std PLAN D75C

03-26-04

Back to Table of Contents

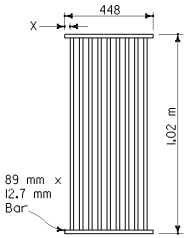

TYPE 450-9

35 mm Clear spacing. Use within the roadbed on highways where bicycles and pedestrians are excluded.

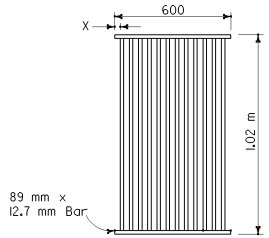

TYPE 600-9

51 mm Clear spacing. Use in locations off the roadbed on all types of highways.

TYPE 600-12

35 mm Clear spacing. Use within the roadbed on highways where bicycles and pedestrians are excluded.

RECTANGULAR GRATE DETAILS

(See table below)

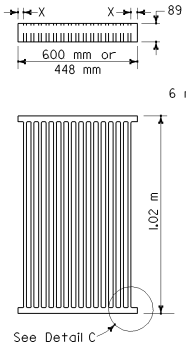

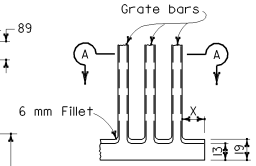

DETAIL C

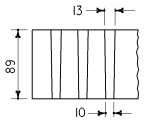

SECTION A-A

ALTERNATIVE CAST NODULAR IRON GRATE OR CAST STEEL GRATE

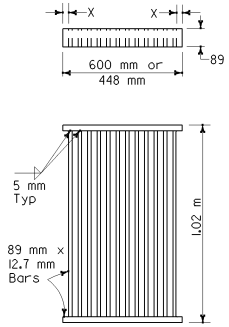

ALTERNATIVE WELDED GRATE

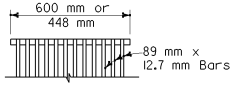

CAST END BLOCK

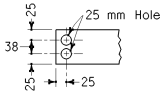

END OF BAR

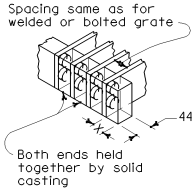

ALTERNATIVE CAST NODULAR IRON OR CAST STEEL END BLOCK GRATE

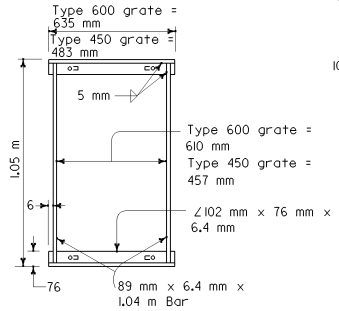

TYPICAL FRAME

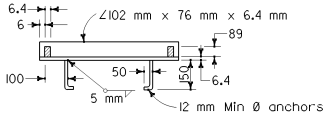

CROSS SECTION

(Thru frame)

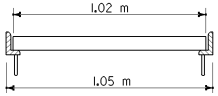

LONGITUDINAL SECTION

(Thru frame and grate)

RECTANGULAR FRAME DETAILS

(For all rectangular grates)

GRATE BAR SPACING TABLE

TYPE	NO. OF BARS	CLEAR BAR SPACING (mm)	X (mm)
450-9	9	35	27
600-9	9	51	40
600-12	12	35	32

INLET TYPE	COVER TYPE	MASS (kg)
OS	PLATE	79
OL-2.1	PLATE	77
OL-3.0	PLATE	77
OL-4.3	PLATE	77
OL-6.4	PLATE	77
OCP	PLATE	51
OCPI	PLATE	51
OCPI	REDWOOD	19
OMP	PLATE	80
OMPI	PLATE	80

INLET TYPE	GRATE TYPE	NO. OF GRATES	MASS (kg)
GDO	600-12	2	288
GOL-2.1	600-12	1	148
GOL-3.0	600-12	1	148
G0,G1,G2,G3,G4(TYPE 600)	600-9	1	119
	600-12	1	148
G4(TYPE 450),G5,G6	450-9	1	113
GT-1	450-9	2	226
GT-2	450-9	2	226
GT-3	600-12	2	296
GT-4	600-12	2	296
TRASH RACK			10

BASIS FOR MISC IRON & STEEL FINAL PAY MASSES FOR DRAINAGE INLETS

(See General Notes, No 8)

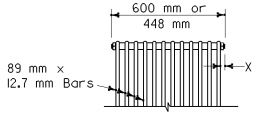

BOLTED END BLOCK

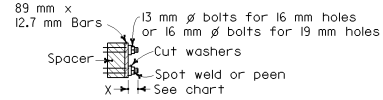

BOLTING DETAIL

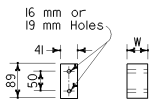

BAR SPACER

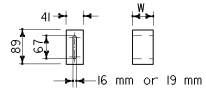

ALTERNATIVE SPACER

35 mm or 50 mm

ALTERNATIVE BOLTED GRATE

Caltrans Metric

DIST	COUNTY	ROUTE	KILOMETER POST TOTAL PROJECT	SHEET NO.	TOTAL SHEETS

REGISTERED CIVIL ENGINEER

July 1, 2004

PLANS APPROVAL DATE

REGISTERED PROFESSIONAL ENGINEER Glenn DeCou No. C34547 Exp. 9-30-05 CIVIL STATE OF CALIFORNIA

The State of California or its officers or agents shall not be responsible for the accuracy or completeness of electronic copies of this plan sheet.

To get to the Caltrans web site, go to: http://www.dot.ca.gov

NOTES

1. Grate type numbers refer to approximate width of grate in millimeters and number of bars, respectively.
2. Contractor has the option of using cast nodular iron, cast steel, welded, bolted, or cast end block grate.
3. See Special Provisions for requirements pertaining to galvanizing or asphalt dipping of grates and frames.
4. Rounded top of bars optional on all grates.
5. Pipe inlets with a grate shall be placed so that bars parallel direction of principle surface flow.
6. Full penetration butt welds may be substituted for the fillet welds on all anchors.
7. Standard square, hexagon, round or equivalent headed anchors may be substituted for the right angle hooks on the anchors shown on this plan.
8. Grate and frame weights are based on welded grates (weights of face angles, steps, protection bars, etc. are not included).

STATE OF CALIFORNIA
DEPARTMENT OF TRANSPORTATION

GRATE DETAILS

NO SCALE

ALL DIMENSIONS ARE IN MILLIMETERS UNLESS OTHERWISE SHOWN

D77A

2004 Std PLAN D77A

05-12-04

Back to Table of Contents

The State of California or its officers or agents shall not be responsible for the accuracy or completeness of electronic copies of this plan sheet.

To get to the Caltrans web site, go to: http://www.dot.ca.gov

Caltrans Metric

DIST	COUNTY	ROUTE	KILOMETER POST TOTAL PROJECT	SHEET NO.	TOTAL SHEETS

REGISTERED CIVIL ENGINEER

July 1, 2004
PLANS APPROVAL DATE

REGISTERED PROFESSIONAL ENGINEER Glenn DeCou NO. C34547 EXP. 9-30-05 CIVIL STATE OF CALIFORNIA

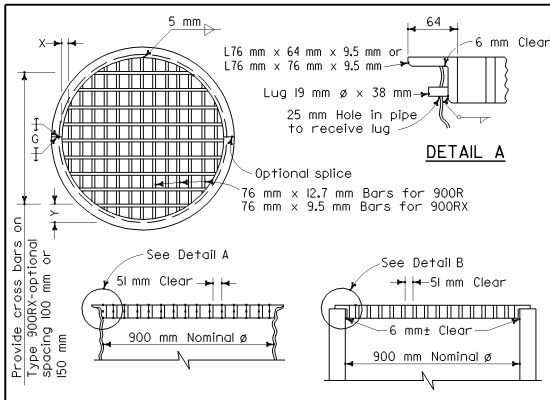

TYPE 900R AND 900RX GRATE DETAILS

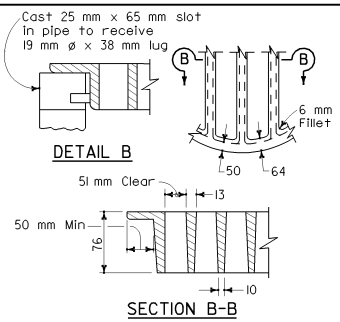

ALTERNATIVE CAST NODULAR IRON GRATE OR CAST STEEL GRATE TYPE 900R AND 900RX

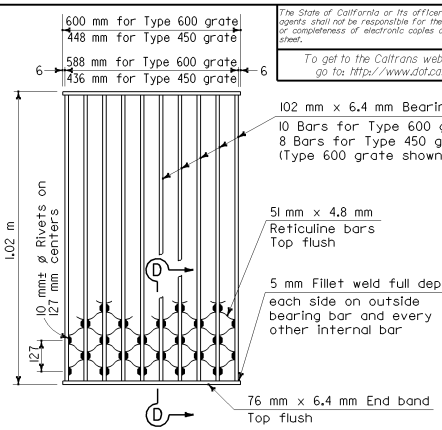

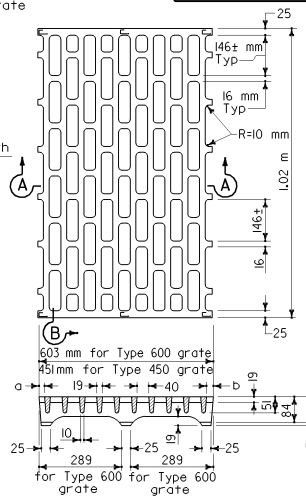

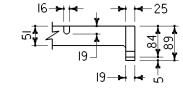

Type 450 Grate	Type 600 Grate
a=10 mm	a=22 mm
b=10 mm	b=19 mm

NOTE

Mass of Type 600 grate = 70 kg.
Mass of Type 450 grate = 59 kg.
On Type 450 grate omit center bearing point.

TYPE 450-8C AND 600-10C GRATE

(Cast nodular iron)

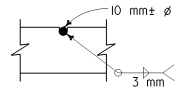

10 mm± ø Cross bars may be fillet welded, resistance welded or electroforged to bearing bars.

CROSS BAR DETAIL TYPE 900RX GRATE (WELDED STEEL)

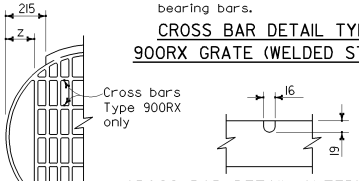

CROSS BAR DETAIL ALTERNATIVE CAST NODULAR IRON GRATE OR CAST STEEL GRATE TYPE 900RX

MODIFIED TYPE 900R AND 900RX GRATE FOR ODI INLET

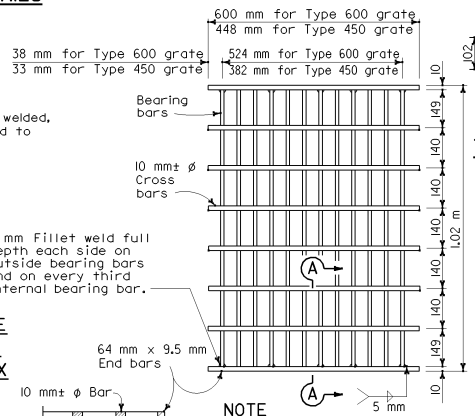

NOTE

Bearing bars to be 89 mm x 9.5 mm bars on 48 mm centers.

12 Bars for Type 600 grate - 9 bars for Type 450 grates. (Type 600 grate shown.)

Mass of Type 600 grate = 87 kg.

Mass of Type 450 grate = 66 kg.

10 mm± ø Cross bars may be fillet welded, resistance welded or electroforged to bearing bars.

TYPE 450-9X AND 600-12X GRATE

(Welded Steel)

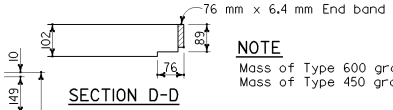

NOTE

Mass of Type 600 grate = 83 kg.
Mass of Type 450 grate = 66 kg.

TYPE 450-8S AND 600-10S GRATE

(Welded Steel)
Reticuline type

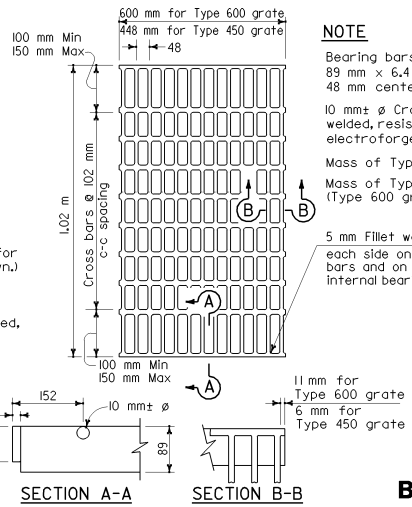

TYPE 450-10 AND 600-13 GRATE

(Welded Steel)

NOTE

Bearing bars to be 89 mm x 6.4 mm bars on 48 mm centers.

10 mm± ø Cross bars may be fillet welded, resistance welded or electroforged to bearing bars.

Mass of Type 600 grate = 64 kg.

Mass of Type 450 grate = 49 kg. (Type 600 grate shown)

NOTES

1. When alternative grates are allowed - Final pay based on alternative with the lesser mass.
2. Seal welding at all surfaces not required when grates are galvanized.
3. Use frame shown on Standard Plan D74A, D74B or D77A as appropriate.
4. When type 600-10S, 600-12X or 600-13 grates are used with GDO inlets, a 6.4 mm x 89 mm x 1.04 m steel bar shall be welded across the center of inlet frame to separate the individual grates.

GRATE BAR SPACING TABLE

TYPE	NO. OF BARS	CLEAR BAR SPACING	X (mm)	Y (mm) 100 mm SPACING	Y (mm) 150 mm SPACING	Z (mm)
900R	13	51 mm	54	-	-	-
900RX (Steel)	15	51 mm	14	95	146	-
900RX (Cast)	13	51 mm	54	95	146	-
900R Mod	12	51 mm	54	-	-	127
900RX Mod (Steel)	13	51 mm	14	95	146	144
900RX Mod (Cast)	12	51 mm	54	95	146	127

INLET TYPE	GRATE TYPE	NO. OF GRATES	MASS (kg)
ODI	900RX (Mod)	1	89
GMP, GCP, GCPI	900RX	1	98
ODI	900R (Mod)	1	100
GMP, GCP, GCPI	900R	1	107

BASIS FOR MISC IRON & STEEL FINAL PAY MASSES FOR DRAINAGE INLETS

INLET TYPE	GRATE TYPE	NO. GRATES	MASS (kg)
GDO (SEE NOTE 4)	600-10C	2	177
	600-10S	2	207
	600-12X	2	215
	600-13	2	170
G0,G0L,G1,G2, G3,G4 (TYPE 600)	600-10C	1	92
	600-10S	1	104
	600-12X	1	108
	600-13	1	85
G4 (TYPE 450) G5,G6	450-8S	1	85
	450-9X	1	85
	450-10	1	68
GT-1,GT-2	450-8S	2	170
	450-9X	2	170
	450-10	2	135
GT-3,GT-4	600-10C	2	183
	600-10S	2	208
	600-12X	2	217
	600-13	2	171

STATE OF CALIFORNIA
DEPARTMENT OF TRANSPORTATION

BICYCLE PROOF GRATE DETAILS

NO SCALE

ALL DIMENSIONS ARE IN MILLIMETERS UNLESS OTHERWISE SHOWN

D77B

08-05-04

Back to Table of Contents

DIST	COUNTY	ROUTE	KILOMETER POST TOTAL PROJECT	SHEET NO.	TOTAL SHEETS

Caltrans Metric

REGISTERED CIVIL ENGINEER

July 1, 2004
PLANS APPROVAL DATE

REGISTERED PROFESSIONAL ENGINEER
Glenn DeCou
No. C34547
Exp. 9-30-05
CIVIL
STATE OF CALIFORNIA

The State of California or its officers or agents shall not be responsible for the accuracy or completeness of electronic copies of this plan sheet.

To get to the Caltrans web site, go to: http://www.dot.ca.gov

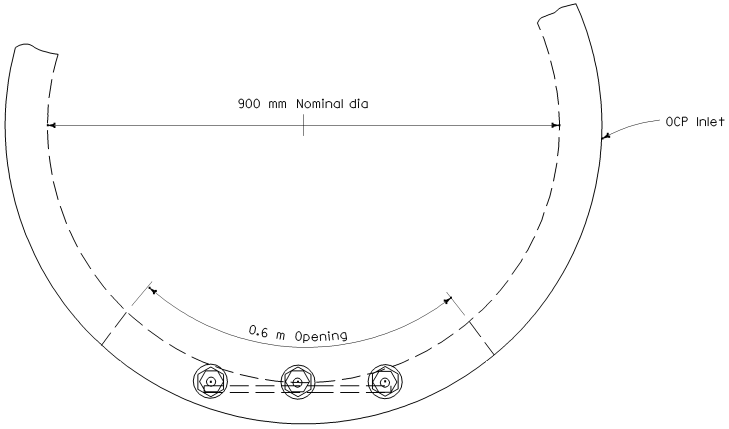

PLAN

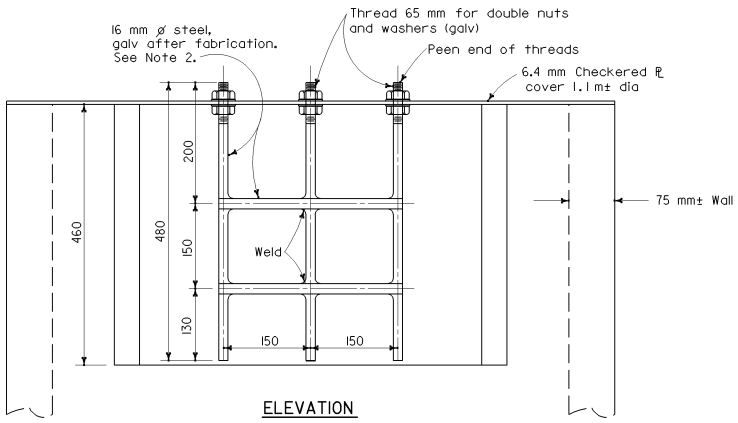

ELEVATION

ALTERNATIVE
TRASH RACK FOR TYPE OCP INLET
Single or double opening

NOTES

1. Alternative methods of securing drop-handles to cover will be acceptable.
2. Galvanizing: See Standard Specifications or Special Provisions.
3. This hinged cover is to be used only on embankment or steep slopes.

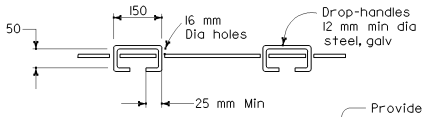

SECTION A-A

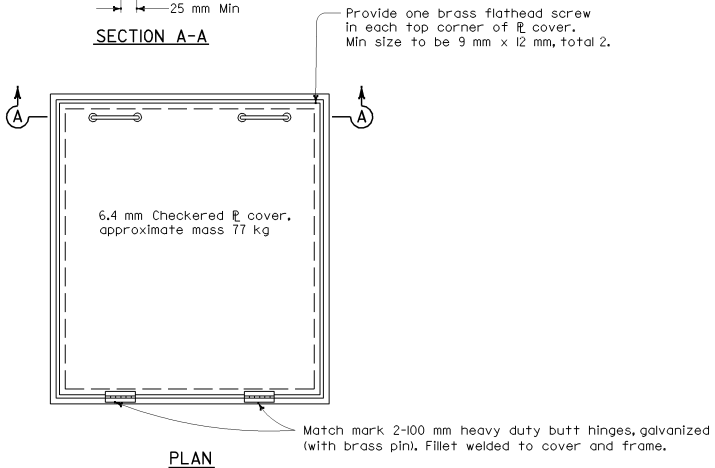

PLAN

HINGED COVER FOR
TYPE OL AND OS INLETS

STATE OF CALIFORNIA
DEPARTMENT OF TRANSPORTATION

ALTERNATIVE HINGED COVER FOR TYPE OL AND OS INLETS AND TRASH RACK FOR TYPE OCP INLET

NO SCALE

ALL DIMENSIONS ARE IN MILLIMETERS UNLESS OTHERWISE SHOWN

D77C

2004 Std PLAN D77C

03-26-04

Back to Table of Contents

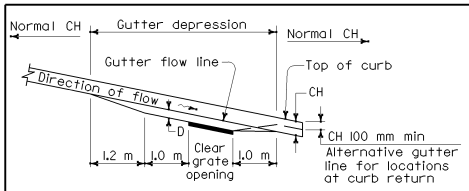

PROFILE

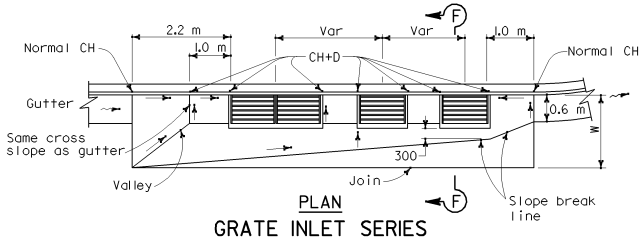

PLAN

GRATE INLET SERIES

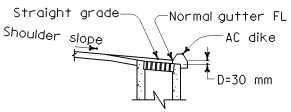

DETAIL OF INLET WITH DIKE

(Single grate shown)

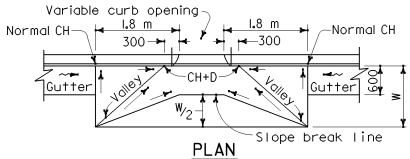

PLAN

TYPE OS AND OL INLETS IN GRADE SAG

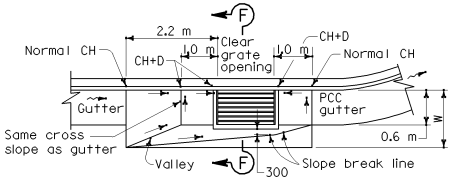

PLAN

TYPE GO AND GI THRU G6 INLETS ON GRADE

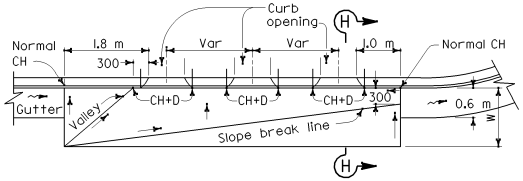

TYPE OS AND OL INLETS IN SERIES ON GRADE

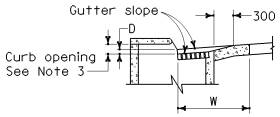

SECTION B-B

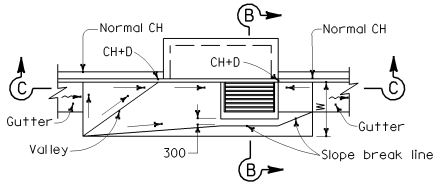

PLAN

TYPE GOL INLET ON GRADE

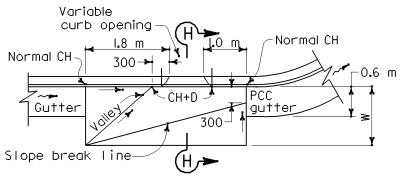

PLAN

TYPE OS AND OL INLETS ON GRADE

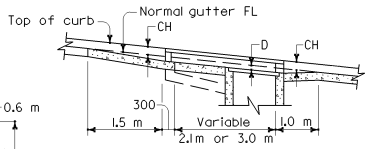

SECTION C-C

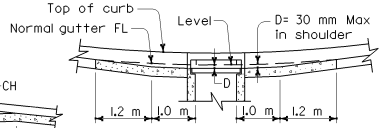

SECTION D-D

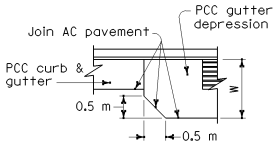

DETAIL OF ASPHALT CONCRETE PAVEMENT

(See Note 4)

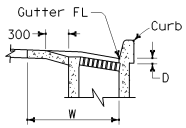

SECTION F-F

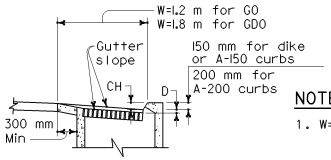

SECTION E-E

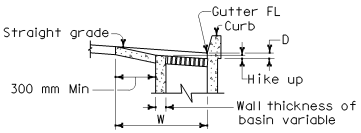

SECTION G-G

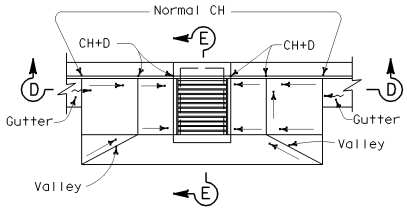

PLAN

TYPE GO AND GDO INLET GRADE SAG

(GDO shown)

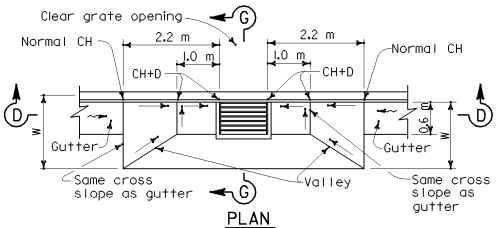

PLAN

TYPE GI THRU G6 GT3 AND GT4 INLETS IN GRADE SAG

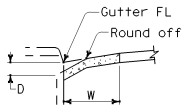

SECTION H-H

NOTES

1. W= Width of depressed apron. Depressed aprons shall be 1.2 m on shoulder and 1.2 m to 1.8 m in city street gutters unless otherwise shown.

   D= Gutter depression. The gutter depression shall be 30 mm for shoulder and 30 mm to 80 mm in city street gutter or locations outside of shoulder unless otherwise shown.

   CH= Curb Height.

   → = Straight grade, downward slope.

   ~→ = Gutter or shoulders direction of flow.

2. Gutter depressions shall be 200 mm thick.
3. Establish curb opening height at midpoint of grate.
4. Details shown for portland cement concrete pavement. When asphalt concrete pavement is used, corners to be cut off as shown on Detail of Asphalt Concrete Pavement.

STATE OF CALIFORNIA
DEPARTMENT OF TRANSPORTATION

GUTTER DEPRESSIONS

NO SCALE

ALL DIMENSIONS ARE IN MILLIMETERS UNLESS OTHERWISE SHOWN

D78A

Caltrans Metric

DIST	COUNTY	ROUTE	KILOMETER POST TOTAL PROJECT	SHEET NO.	TOTAL SHEETS

REGISTERED CIVIL ENGINEER

July 1, 2004
PLANS APPROVAL DATE

REGISTERED PROFESSIONAL ENGINEER Glenn DeCou No. C34547 Exp. 9-30-05 CIVIL STATE OF CALIFORNIA

The State of California or its officers or agents shall not be responsible for the accuracy or completeness of electronic copies of this plan sheet.

To get to the Caltrans web site, go to: http://www.dot.ca.gov

2004 Std PLAN D78A

04-23-04

Back to Table of Contents

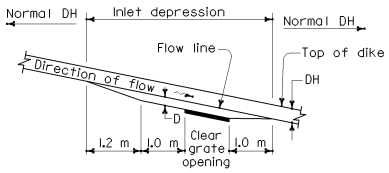

PROFILE

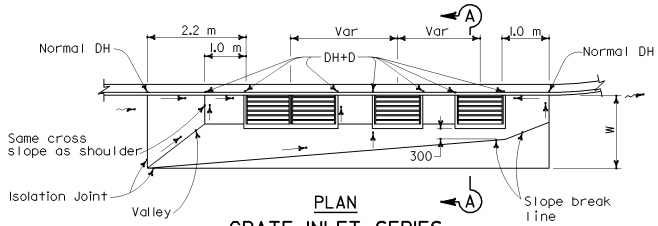

PLAN

GRATE INLET SERIES

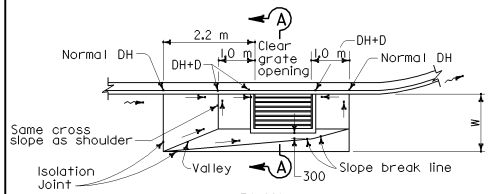

PLAN

TYPE GO AND GI THRU G6 INLETS ON GRADE

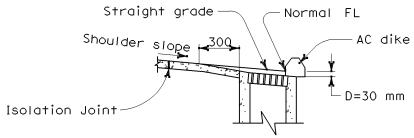

SECTION A-A

(Single grate shown)

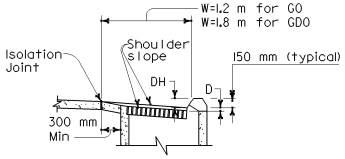

SECTION B-B

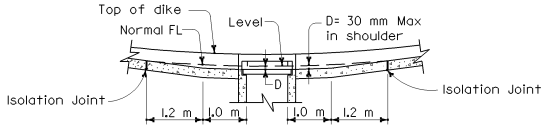

SECTION D-D

NOTES

1. W = Width of depressed apron. Depressed aprons shall be 1.2 m unless indicated otherwise.

   D = Inlet depression. The Inlet depression shall be 30 mm unless indicated otherwise.

   DH = Dike Height.

   → = Straight grade, downward slope.

   ⇝ = Direction of flow.

2. Apron shall be portland cement concrete and match thickness of adjacent shoulder pavement.
3. Establish curb opening height of Type GO or GDO at midpoint of grate.
4. See Standard Plans P45 and P46 for Isolation Joint Details.

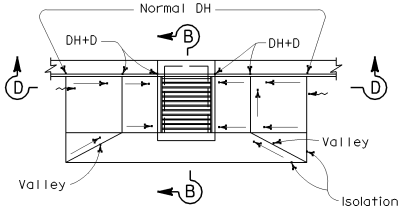

PLAN

TYPE GO AND GDO INLET GRADE SAG

(GDO shown)

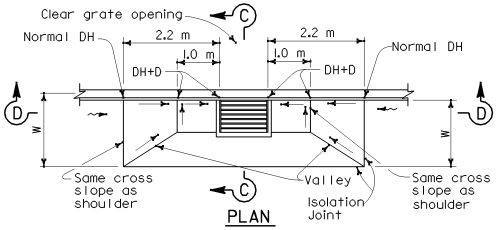

PLAN

TYPE GI THRU G6 GT3 AND GT4 INLETS IN GRADE SAG

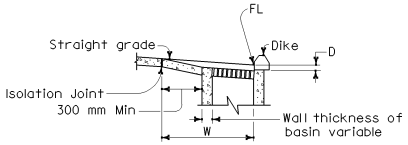

SECTION C-C

STATE OF CALIFORNIA
DEPARTMENT OF TRANSPORTATION

INLET DEPRESSIONS PORTLAND CEMENT CONCRETE SHOULDERS

NO SCALE

ALL DIMENSIONS ARE IN MILLIMETERS UNLESS OTHERWISE SHOWN

D78B

Caltrans Metric

DIST	COUNTY	ROUTE	KILOMETER POST TOTAL PROJECT	SHEET NO.	TOTAL SHEETS

REGISTERED CIVIL ENGINEER

July 1, 2004
PLANS APPROVAL DATE

REGISTERED PROFESSIONAL ENGINEER Glenn DeCou No. C34547 Exp. 9-30-05 CIVIL STATE OF CALIFORNIA

The State of California or its officers or agents shall not be responsible for the accuracy or completeness of electronic copies of this plan sheet.

To get to the Caltrans web site, go to: http://www.dot.ca.gov

05-04-04

Back to Table of Contents

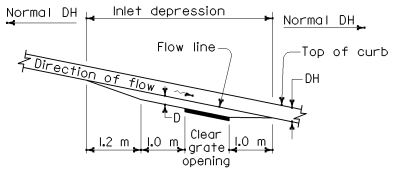

PROFILE

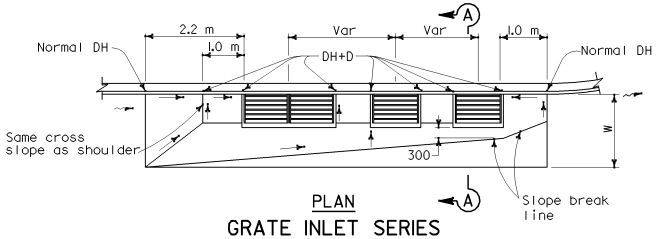

PLAN

GRATE INLET SERIES

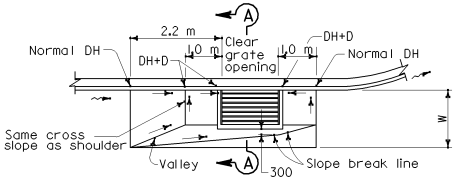

PLAN

TYPE GO AND GI THRU G6 INLETS ON GRADE

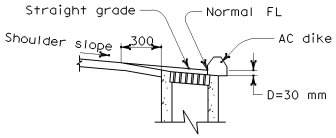

SECTION A-A

(Single grate shown)

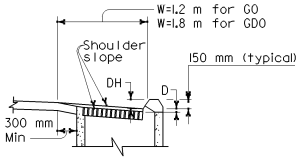

SECTION B-B

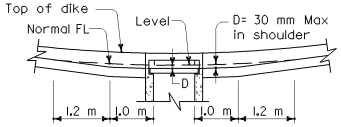

SECTION D-D

NOTES

1. W = Width of depressed apron. Depressed aprons shall be 1.2 m unless indicated otherwise.

   D = Inlet depression. The inlet depression shall be 30 mm unless indicated otherwise.

   DH = Dike Height.

   → = Straight grade, downward slope.

   ~→ = Direction of flow.

2. Apron shall be asphalt concrete and match thickness of adjacent shoulder pavement.

3. Establish curb opening height of Type GO or GDO at midpoint of grate.

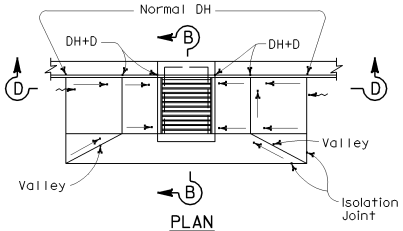

PLAN

TYPE GO AND GDO INLET GRADE SAG

(GDO shown)

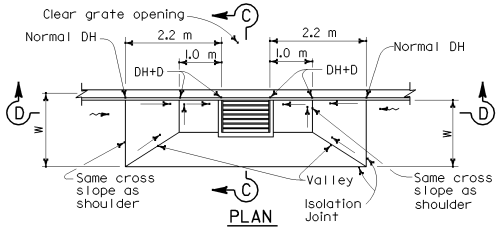

PLAN

TYPE GI THRU G6 GT3 AND GT4

INLETS IN GRADE SAG

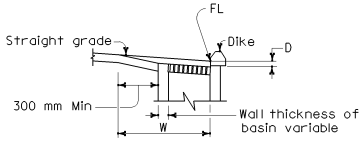

SECTION C-C

STATE OF CALIFORNIA
DEPARTMENT OF TRANSPORTATION

INLET DEPRESSIONS
ASPHALT CONCRETE SHOULDERS

NO SCALE

ALL DIMENSIONS ARE IN MILLIMETERS UNLESS OTHERWISE SHOWN

D78C

Caltrans Metric

DIST	COUNTY	ROUTE	KILOMETER POST TOTAL PROJECT	SHEET NO.	TOTAL SHEETS

REGISTERED CIVIL ENGINEER

July 1, 2004
PLANS APPROVAL DATE

REGISTERED PROFESSIONAL ENGINEER Glenn DeCou No. C34547 Exp. 9-30-05 CIVIL STATE OF CALIFORNIA

The State of California or its officers or agents shall not be responsible for the accuracy or completeness of electronic copies of this plan sheet.

To get to the Caltrans web site, go to: http://www.dot.ca.gov

2004 Std PLAN D78C

05-12-04

Back to Table of Contents

			WALL A																				
			MINIMUM COVER TO 3 m MAX COVER									6 m MAX COVER									12 m MAX COVER	
	ID	t	METHOD 1			METHOD 2			METHOD 3A			METHOD 1			METHOD 2			METHOD 3A			METHOD 3A	
	mm		Asi	Aso	Ase	Asi	Aso	Ase	Asi	Aso	Ase	Asi	Aso	Ase	Asi	Aso	Ase	Asi	Aso	Ase	Asi	Aso
f'c = 42 MPa	600	63	360	–	–	280	–	–	210	–	–	470	–	–	300	–	–	210	–	–	420	–
	750	69	400	–	–	380	–	–	320	–	–	660	–	640	420	–	–	300	–	–	570	380
	900	75	450	280	490	440	280	440	360	250	360	780	400	800	530	340	550	340	210	340	700	470
	1050	88	530	320	590	490	320	490	380	280	380	850	440	950	570	360	590	360	230	380	740	510
	1200	100	660	380	680	510	340	530	400	280	400	950	490	1080	640	380	640	400	250	400	800	550
	1350	113	680	400	700	530	360	530	400	300	420	1040	530	1230	680	420	700	440	300	440	870	590
	1500	125	700	400	720	550	360	550	400	300	420	1140	570	1380	740	470	760	490	320	490	950	640
	1650	138	720	420	740	550	360	570	420	300	420	1250	610	1500	800	510	830	530	340	530	1040	680
	1800	150	740	420	760	550	360	570	400	300	420	1330	660	1630	870	550	890	550	360	570	1120	720
	1950	163	760	420	780	570	380	590	420	300	440	1460	700	1910	930	590	950	590	400	610	1210	780
	2100	175	800	440	830	590	380	610	420	300	550	1570	760	–	990	640	1040	660	420	680	1290	830
	2250	188	850	470	870	640	400	660	440	300	610	–	–	–	1080	680	1140	700	470	720	1400	890
	2400	200	910	490	930	660	420	700	440	300	700	–	–	–	1140	720	1290	740	490	760	1500	950
	2550	213	970	530	990	720	470	800	490	320	800	–	–	–	1230	760	1480	800	530	830	1590	990
	2700	225	1040	570	1060	760	490	890	530	340	890	–	–	–	1310	830	1690	850	550	890	1690	1060

			WALL AA	
			24 m MAX COVER	
	ID	t	METHOD 3B	
	mm		Asi	Aso
f'c = 42 MPa	600	144	280	150
	750	150	400	150
	900	163	510	150
	1050	175	610	210
	1200	188	720	280
	1350	200	850	360
	1500	213	990	440
	1650	225	1100	530
f'c = 49 MPa	1800	238	1210	590
	1950	250	1330	680

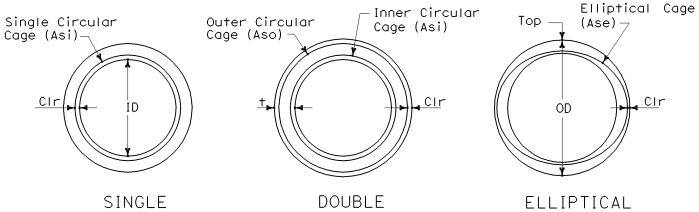

CAGE REINFORCEMENT

t = Pipe barral wall thickness, mm

Asi = Inner cage reinforcement, or single circular cage reinforcement, square mm/m

Aso = Outer cage reinforcement, square mm/m

Ase = Elliptical single cage reinforcement, square mm/m

ID = Inside Diameter, mm

OD = Outside Diameter, mm

Clr = Design clearance, mm (see Note 6)

			WALL B																				
			MINIMUM COVER TO 3 m MAX COVER									6 m MAX COVER									12 m MAX COVER	
	ID	t	METHOD 1			METHOD 2			METHOD 3A			METHOD 1			METHOD 2			METHOD 3A			METHOD 3A	
	mm		Asi	Aso	Ase	Asi	Aso	Ase	Asi	Aso	Ase	Asi	Aso	Ase	Asi	Aso	Ase	Asi	Aso	Ase	Asi	Aso
f'c = 35 MPa	600	75	250	–	–	210	–	–	190	–	–	380	–	–	250	–	–	190	–	–	380	–
	750	88	400	–	320	300	–	250	250	–	210	530	–	470	340	–	280	230	–	210	510	–
	900	100	380	190	380	280	170	300	230	150	230	490	230	590	340	190	340	230	150	230	470	280
	1050	113	440	230	440	320	190	340	280	170	280	570	300	740	380	210	400	280	170	280	530	320
	1200	125	510	280	510	380	230	380	300	190	320	660	340	910	440	250	470	320	190	320	610	380
	1350	138	550	300	550	400	250	400	320	210	320	760	380	1060	510	300	510	360	210	380	700	440
	1500	150	570	320	590	420	280	420	340	210	340	850	440	1270	570	340	570	400	230	420	780	490
	1650	163	610	320	640	440	300	440	360	230	380	930	490	1550	640	380	640	440	300	440	870	550
	1800	175	640	340	660	440	300	470	360	230	400	1100	550	1840	700	420	720	530	320	530	950	610
	1950	188	660	360	680	470	320	510	380	250	470	1310	590	2140	760	470	780	550	340	570	1040	680
	2100	200	700	380	720	490	320	550	380	250	550	1480	640	–	830	510	870	590	360	610	1120	720
	2250	213	760	400	780	530	340	640	400	250	640	–	–	–	890	550	1040	640	380	660	1190	760
	2400	225	830	420	850	570	340	720	420	250	720	–	–	–	950	590	1160	680	420	720	1250	800
	2550	238	890	470	950	610	380	800	470	300	800	–	–	–	1040	660	1350	740	470	800	1350	870
	2700	250	950	510	1140	660	400	910	510	320	910	–	–	–	1100	680	1500	800	510	910	1420	970

			WALL BB	
			24 m MAX COVER	
	ID	t	METHOD 3B	
	mm		Asi	Aso
f'c = 35 MPa	600	163	230	150
	750	175	340	150
	900	188	440	150
	1050	200	530	150
	1200	213	660	190
	1350	225	780	280
	1500	238	870	340
	1650	250	1140	420
f'c = 42 MPa	1800	265	1230	510
	1950	280	1310	570
f'c = 49 MPa	2100	290	1330	610
	2250	305	1440	700

DESIGN NOTES

Design: Bridge Design Specifications (1983 AASHTO with interims and revisions by Caltrans)

A. Earth Loading:
Earth Pressures - Vertical: 22.0 kPa/m
Horizontal: Varies, see design lateral pressure chart (Circular Pipe only)

B. Unit Stresses: (Used in Design Tables)
fy = 450 MPa
f'c = See Tables

C. The RCP as shown on this sheet is not intended to be used in a corrosive environment. A special design may be required.

			WALL X																	
			MIN COVER TO 3 m MAX COVER						3.1 m TO 6 m MAX COVER						6.1 m TO 9 m MAX COVER					
	ID	t	METHOD 3A			METHOD 3B			METHOD 3A			METHOD 3B			METHOD 3A			METHOD 3B		
	mm		Asi	Aso	Ase	Asi	Aso	Ase	Asi	Aso	Ase	Asi	Aso	Ase	Asi	Aso		Asi	Aso	
f'c = 42 MPa	600	47	280	–	–	250	–	–	250	–	–	210	–	–	380	–		320	–	
	750	53	380	–	–	360	–	–	320	–	–	250	–	–	490	–		400	–	
	900	59	400	320	400	380	280	380	360	–	300	300	–	250	440	320		450	–	
	1050	63	610	490	610	570	440	570	420	–	420	340	–	340	660	490		510	380	
	1200	69	660	510	660	590	470	610	530	–	490	420	–	380	740	550		590	440	
	1350	75	660	530	660	610	490	610	590	–	510	490	–	400	760	550		590	440	
	1500	88	610	490	640	570	440	590	680	–	530	550	–	420	780	570		610	470	
	1650	94	610	490	610	570	440	590	590	420	590	490	360	490	890	640		700	530	
	1800	105	570	440	570	530	400	550	590	420	590	490	340	490	870	610		700	510	
	1950	119	530	400	550	510	380	510	590	420	610	490	360	510	870	610		700	510	
	2100	132	530	400	570	490	360	530	610	440	640	510	360	530	890	640		720	510	
	2250	144	510	380	590	470	340	590	700	490	720	590	400	590	990	720		830	590	
	2400	150	510	380	680	490	340	680	720	510	740	590	420	680	990	720		830	590	
	2550	163	510	380	760	530	340	760	780	550	800	660	470	760	1120	780		910	660	
	2700	175	550	380	870	490	340	870	850	590	890	720	510	870	1250	850		990	720	

CONSTRUCTION NOTES

1. For details of the method of excavation, backfill and bedding (Method 1, Method 2, etc.), see Standard Plan A62D.
2. The tables for minimum allowable classes and D-loads of RCP on Standard Plan A62D shall not apply to direct design RCP.
3. Notes 3, 9 and 10 on Standard Plan A62D shall apply to direct design RCP.
4. Throughout the length of any given culvert, the direct design selected by the Contractor shall be the same, including the method of excavation, backfill and bedding.
5. The embankment height prior to excavation specified in note 5 of the Standard Plan A62D shall apply to the direct design RCP instal lation when Method 2, 3A or 3B are used.
6. For single circular cage reinforcement, minimum clearance shall be 40% of the wall thickness (t). For el liptical and double circular cage reinforcement where the wall thickness (t) is less than 65 mm, the minimum clearance (Clr) for reinforcement shall be 20 mm, and where the wall thickness (t) is 65 mm or more the minimum clearance (Clr) for reinforcement shall be 25 mm.
7. Minimum cover measured at the edge of pavement shall be 600 mm to top of AC pavement and 300 mm to top of rigid pavement.

Caltrans Metric

DIST	COUNTY	ROUTE	KILOMETER POST TOTAL PROJECT	SHEET NO.	TOTAL SHEETS

REGISTERED CIVIL ENGINEER

July 1, 2004
PLANS APPROVAL DATE

REGISTERED PROFESSIONAL ENGINEER Dallas Forester No. C37765 Exp. 12-31-04 CIVIL STATE OF CALIFORNIA

The State of California or its officers or agents shall not be responsible for the accuracy or completeness of electronic copies of this plan sheet.

To get to the Caltrans web site, go to: http://www.dot.ca.gov

STATE OF CALIFORNIA
DEPARTMENT OF TRANSPORTATION

PRECAST REINFORCED CONCRETE PIPE DIRECT DESIGN METHOD

NO SCALE

ALL DIMENSIONS ARE IN MILLIMETERS UNLESS OTHERWISE SHOWN

D79

2004 Std PLAN D79

04-01-04

Back to Table of Contents

	SPAN (mm)	1220						1520								1830								2135								2440								
	HEIGHT (mm)	610		915		1220		610		915		1220		1520		915		1220		1520		1830		915		1220		1520		1830		2135		1220		1520		1830		2135		2440	
Maximum Earth Cover (m)		3.0	6.0	3.0	6.0	3.0	6.0	3.0	6.0	3.0	6.0	3.0	6.0	3.0	6.0	3.0	6.0	3.0	6.0	3.0	6.0	3.0	6.0	3.0	6.0	3.0	6.0	3.0	6.0	3.0	6.0	3.0	6.0	3.0	6.0	3.0	6.0	3.0	6.0	3.0	6.0
Conc	Roof T_1 (mm)	180	180	180	180	180	180	190	190	190	190	190	190	190	190	205	205	205	205	205	205	205	205	205	230	205	230	205	230	205	230	215	230	215	230	215	240	215	240	215	255
Conc	Walls T_2 (mm)	150	150	150	150	150	165	150	150	150	150	150	180	165	190	150	150	150	180	165	190	180	215	150	150	150	180	165	190	180	215	205	240	150	180	165	190	180	215	205	240
Conc	Invert T_3 (mm)	150	150	150	150	150	165	165	180	165	180	165	180	165	180	180	205	180	205	180	205	180	205	205	230	205	230	205	230	205	230	205	230	205	240	205	255	205	255	205	255
Reinf	Spacing (mm)	175	175	175	175	175	175	215	150	215	140	215	140	215	140	190	125	190	125	190	125	190	115	165	125	165	115	165	140	165	140	165	140	150	125	150	125	150	115	150	125
Reinf	"a" Size Bar #	19	19	19	19	19	19	22	19	22	19	22	19	22	19	22	19	22	19	22	19	22	19	22	19	22	19	22	22	22	22	22	22	22	22	22	22	22	22	22	22
Reinf	"e" Size Bar #	13	13	13	16	16	19	13	13	13	13	16	16	19	19	13	13	16	16	19	19	22	19	13	13	16	16	19	19	19	22	22	22	16	16	16	19	19	19	19	22
Quantities	Concrete m^3/m	0.69	0.69	0.78	0.78	0.87	0.94	0.83	0.85	0.93	0.95	1.02	1.11	1.16	1.27	1.09	1.14	1.18	1.32	1.32	1.48	1.48	1.70	1.27	1.38	1.36	1.56	1.50	1.72	1.68	1.95	1.92	2.21	1.52	1.77	1.66	1.96	1.81	2.24	2.05	2.50
Quantities	Reinforcement kg/m	71	71	74	82	86	100	86	89	86	101	100	121	122	156	104	121	122	143	144	179	185	220	140	140	156	176	180	219	193	263	238	286	183	225	195	254	204	295	238	320

	SPAN (mm)	3050														3660																4270											
	HEIGHT (mm)	1520		1830		2135		2440		2745		3050		1830		2135		2440		2745		3050		3350		3660		2135		2440		2745		3050		3350		3660		3960		4270	
Maximum Earth Cover (m)		3.0	6.0	3.0	6.0	3.0	6.0	3.0	6.0	3.0	6.0	3.0	6.0	3.0	6.0	3.0	6.0	3.0	6.0	3.0	6.0	3.0	6.0	3.0	6.0	3.0	6.0	3.0	6.0	3.0	6.0	3.0	6.0	3.0	6.0	3.0	6.0	3.0	6.0	3.0	6.0	3.0	6.0
Conc	Roof T_1 (mm)	205	270	205	270	205	270	205	270	205	270	215	280	215	305	215	305	215	305	215	305	215	305	240	305	240	305	240	355	240	355	240	355	240	355	255	355	255	355	270	355	280	355
Conc	Walls T_2 (mm)	205	205	205	230	205	230	205	255	215	290	240	320	205	255	215	270	215	270	215	290	230	320	270	345	290	380	280	240	280	240	290	240	290	255	320	270	355	290	380	320	420	345
Conc	Invert T_3 (mm)	205	280	205	280	205	280	205	280	205	280	215	280	215	320	230	320	230	320	230	320	230	320	240	330	255	330	255	370	255	370	255	370	255	370	270	370	270	380	280	380	290	380
Reinforcement	Spacing (mm)	325	300	300	300	275	275	250	275	275	250	275	250	225	250	225	250	225	250	200	250	200	250	250	250	225	225	200	250	225	250	225	250	200	250	200	250	200	250	250	250	250	225
Reinforcement	**"a" Size Bar #	19	22	19	22	19	22	19	22	19	19	19	19	19	22	19	22	19	22	19	22	19	22	19	19	19	19	19	22	22	22	22	22	22	22	22	22	22	19	22	19	22	19
Reinforcement	"b" Size Bar #	19	22	19	22	19	22	19	22	19	19	22	22	19	22	19	22	19	22	19	22	19	22	22	22	19	22	19	22	22	22	22	22	22	22	22	22	22	19	25	22	25	22
Reinforcement	"b" Dimension "B" (mm)	900	900	900	925	900	1150	900	1150	900	1150	900	1150	950	975	1150	1150	1150	1150	1100	1150	1100	1325	1100	1325	1325	1325	850	1275	1025	1325	1025	1375	1025	1375	1075	1375	1075	1375	1075	1375	1450	1850
Reinforcement	"b" Dimension "Bw" (mm)	1475	1525	1475	1525	1475	1525	1475	1525	1475	1525	1400	1400	1850	1800	1900	2025	1900	2025	1500	1500	1500	1500	1500	1500	1325	1325	1975	2150	2150	2550	2150	2550	1850	1850	1850	1850	1850	1850	1525	1850	1375	1850
Reinforcement	"c" Size Bar #	19	22	19	22	19	22	19	22	22	22	22	22	19	22	19	22	19	22	19	22	19	22	22	22	22	22	22	22	22	22	22	22	22	22	22	22	22	25	25	25	25	25
Reinforcement	"c" Dimension "C" (mm)	1025	1025	2250	1425	2325	1425	2500	1425	2325	1425	2325	1425	1325	1100	2475	1700	2475	1700	2475	1700	2475	1700	2475	1700	2475	1700	1225	1275	2075	2075	1800	1800	1850	1950	2725	1950	2725	1950	2725	1950	2725	1950
Reinforcement	*"e" Size Bar #	13	13	13	13	13	13	13	13	13	13	16	16	13	13	13	13	13	13	13	13	13	13	16	16	16	16	13	13	13	13	13	13	13	13	13	13	13	16	19	19	19	19
Quantities	Concrete m^3/m	2.01	2.50	2.14	2.74	2.26	2.88	2.38	3.17	2.58	3.50	2.98	3.93	2.49	3.50	2.72	3.73	2.81	3.89	3.00	4.22	3.21	4.63	3.78	5.04	4.22	5.56	3.36	4.73	3.51	4.93	3.67	5.10	3.89	5.45	4.26	5.95	4.64	6.46	5.17	7.04	5.72	7.55
Quantities	Reinforcement kg/m	284	397	347	424	387	484	446	504	467	487	536	555	439	539	525	609	543	625	598	615	618	631	655	701	696	795	557	701	668	777	663	874	668	863	732	887	799	900	839	943	899	1130

* See Note 5
** See Note 6

"d" bars, for earth covers up to and including 3.0 m								
Span (mm)	1220	1520	1830	2135	2440	3050	3660	4270
Number	7	8	9	10	11	12	15	20

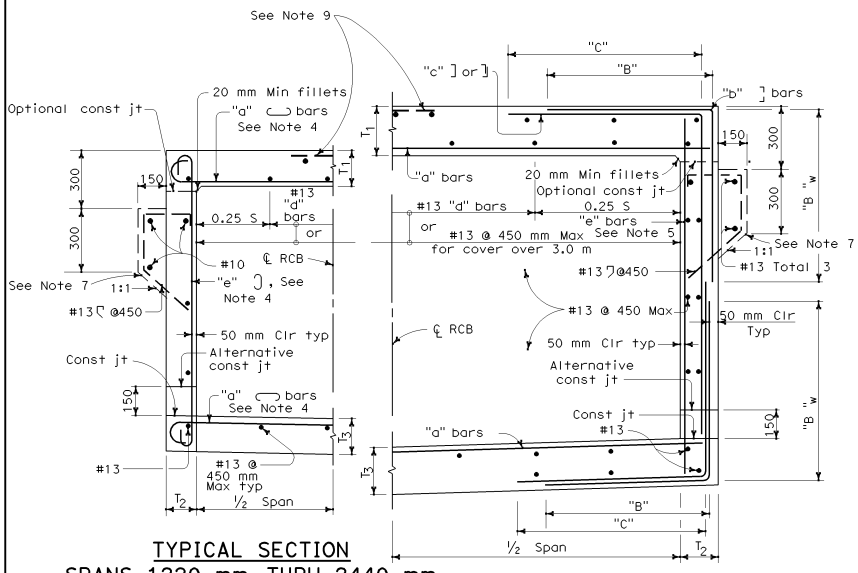

TYPICAL SECTION
SPANS 1220 mm THRU 2440 mm

TYPICAL SECTION
SPANS 3050 mm THRU 4270 mm

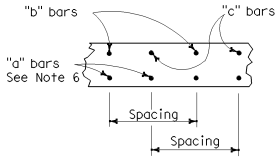

ROOF SECTION
SPANS 3050 mm THRU 4270 mm
INVERT SIMILAR

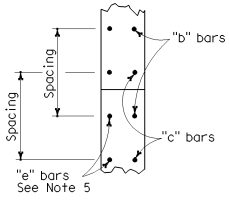

WALL SECTION
SPANS 3050 mm THRU 4270 mm

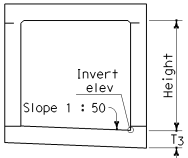

SLOPED INVERT

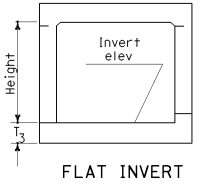

FLAT INVERT

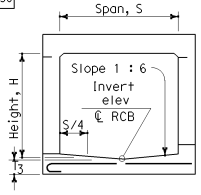

V INVERT

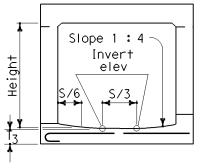

TRAPEZOIDAL INVERT

ALTERNATIVE INVERTS

NOTES

1. For boxes with span or height less than any of those shown in table, use next greater size box concrete dimensions and reinforcement. Make necessary changes in bar lengths and quantities.
2. Quantities are approximate and for design purposes only.
3. For boxes with span or height or cover greater than those shown in tables, a special design is required.
4. It is permissable to eliminate the 180° hooks on every other bar.
5. "e" bars are at half spacing (spans 3050 mm - 4270 mm only).
6. "a" bars are at half spacing (spans 3050 mm - 4270 mm only).
7. Provide paving notch when top is exposed and when pavement is portland cement concrete, and adjust quantities.
8. For design and details not shown, see Standard Plan D82.
9. For exposed top, provide #13 @ 450 mm each way (600 mm lap "c" bars or full span and adjust).

STATE OF CALIFORNIA
DEPARTMENT OF TRANSPORTATION

CAST-IN-PLACE REINFORCED CONCRETE SINGLE BOX CULVERT

NO SCALE

ALL DIMENSIONS ARE IN MILLIMETERS UNLESS OTHERWISE SHOWN

D80

Caltrans Metric

DIST	COUNTY	ROUTE	KILOMETER POST TOTAL PROJECT	SHEET NO.	TOTAL SHEETS

REGISTERED CIVIL ENGINEER
July 1, 2004
PLANS APPROVAL DATE

REGISTERED PROFESSIONAL ENGINEER Dallas Forester No. C37765 Exp. 12-31-04 CIVIL STATE OF CALIFORNIA

The State of California or its officers or agents shall not be responsible for the accuracy or completeness of electronic copies of this plan sheet.

To get to the Caltrans web site, go to: http://www.dot.ca.gov

2004 Std PLAN D80

04-20-04

Back to Table of Contents

SPAN (mm)		1220						1520							1830						2135						2440						
HEIGHT (mm)		610		915		1220		610		915		1220		1520	915		1220		1520	1830	915		1220		1520		1830		1220		1520		1830		1220		1520		1830		1220		1520		1830		2135		2440	
Maximum Earth Cover (m)		3	6	3	6	3	6	3	6	3	6	3	6	3	3	6	3	6	3	6	3	6	3	6	3	6	3	6	3	6	3	6	3	6	3	6	3	6	3	6	3	6	3	6	3	6	3	6	3	6	3	6
Conc	Roof T_1 (mm)	180	180	180	180	180	180	180	190	180	190	180	190	180	190	180	230	180	230	180	230	180	230	180	230	180	190	255	190	255	190	255	205	255	205	280	205	280	205	280	205	280	205	280	205	280	205	280	205	280	205	280
	Exterior Walls T_2 (mm)	150	150	150	150	150	180	150	150	150	150	150	180	165	190	150	150	150	180	165	205	180	205	180	215	150	150	150	150	180	165	190	180	230	205	240	150	190	165	205	180	230	205	255	215	280				
	Invert T_3 (mm)	180	180	180	180	180	180	180	205	180	205	180	200	180	205	180	230	180	230	180	230	180	230	180	230	190	270	190	270	190	270	190	270	190	270		205	290	205	290	205	290	205	290	205	290				
Reinf	Spacing (mm)	400	375	400	375	400	375	290	350	290	350	290	350	290	380	290	300	290	300	290	300	290	300	290	300	275	265	275	265	275	265	275	265	275	265		225	250	225	250	225	250	225	250	225	250				
	"g" Size Bar #	13	22	13	22	13	22	13	22	13	22	13	22	13	22	19	22	19	22	19	22	19	22	19	22	19	22	19	22	19	22	19	22	19	22		22	22	22	22	22	22	22	22	22	22				
	"f" Size Bar #	16	16	16	16	16	16	16	16	16	16	16	16	16	16	16	16	16	16	16	16	16	16	16	16	19	16	19	16	19	16	19	16	19	16		16	16	16	16	16	16	16	16	16	16				
	"a" Size Bar #	19	13	19	13	19	13	19	13	19	13	19	13	19	13	22	13	22	13	22	13	22	13	22	13	19	13	19	13	19	13	19	13	19	13		19	13	19	13	19	13	19	13	19	13				
	*"e" Size Bar #	13	13	13	16	16	19	13	13	13	16	16	19	16	22	13	16	13	19	16	19	19	22	19	22	13	16	16	16	16	19	19	22	19	22		13	16	16	19	19	19	19	22	19	22				
Quantity	Concrete m^3/m	1.30	1.30	1.44	1.44	1.58	1.65	1.51	1.65	1.65	1.79	1.79	2.00	1.98	2.21	1.87	2.29	2.00	2.51	2.19	2.76	2.40	3.00	2.20	2.86	2.34	3.10	2.53	3.30	2.73	3.63	3.00	3.88	2.71	3.73	2.90	3.94	3.10	4.23	3.38	4.54	3.62	4.89							
	Reinforcement kg/m	116	132	125	141	138	167	177	167	182	180	199	204	216	241	277	241	286	266	307	283	338	315	308	293	327	310	338	339	375	390	387	411	421	353	449	396	506	415	521	464	536	485							

SPAN (mm)		3050												3660												4270											
HEIGHT (mm)		1520		1830		2135		2440		2745		3050		1830	2135		2440		2745		3050		3350		3660		2135		2440		2745		3050		3350		3660		3960		4270	
Maximum Earth Cover (m)		3	6	3	6	3	6	3	6	3	6	3	6	3	3	6	3	6	3	6	3	6	3	6	3	6	3	6	3	6	3	6	3	6	3	6	3	6	3	6	3	6
Conc	Roof T_1 (mm)	230	320	230	320	230	320	230	320	240	320	240	320	255	370	255	370	255	370	255	370	255	370	255	370	255	370	255	370	290	420	290	420	290	420	290	420	290	420	290	420	290	420
	Exterior Walls T_2 (mm)	205	205	205	215	205	240	205	270	215	290	240	320	205	215	205	230	215	270	230	290	240	320	255	355	280	380	215	240	215	270	230	290	240	320	270	355	290	380	320	420	330	445
	Invert T_3 (mm)	230	320	230	320	230	320	230	320	230	320	230	320	255	380	255	380	255	380	255	380	255	380	255	380	255	380	290	430	290	430	290	430	290	430	290	430	290	430	290	430	290	430
Reinf	Spacing (mm)	275	190	265	190	250	200	250	200	265	200	265	215	225	200	225	200	200	190	200	190	215	190	215	200	215	200	215	200	215	200	215	200	215	200	215	200	215	200	225	200	225	200
	"g" Size Bar #	22	22	22	22	22	22	22	22	22	22	22	22	22	22	22	22	22	22	22	22	22	22	22	22	22	22	25	25	25	25	25	25	25	25	25	25	25	25	25	25	25	25
	"f" Size Bar #	22	16	19	16	19	16	19	16	19	16	19	16	22	22	22	19	19	19	19	19	19	19	19	19	19	19	19	19	19	19	19	19	19	19	19	19	19	19	19	19	19	19
	"a" Size Bar #	13	13	13	13	13	13	13	13	13	13	13	13	13	13	13	13	13	13	13	13	13	13	13	13	13	13	13	13	13	13	13	13	13	13	13	13	13	13	13	13	13	13
	"b" Size Bar #	16	16	13	16	16	16	19	16	19	19	19	19	16	16	16	19	16	16	19	19	19	19	16	19	19	19	16	19	19	16	19	19	19	19	19	19	22	22	22	22	22	22
	"b" Dim "B" (mm)	1550	800	625	850	700	850	800	950	800	950	800	950	800	950	925	975	1075	975	1075	1025	1150	1025	1150	1025	1150	1025	800	800	1000	1000	1225	1225	1225	1225	1400	1325	1400	1500	1600	1500	1600	1500	1600	1500
	"b" Dim "Bw" (mm)	1225	1500	1125	1500	1225	1500	1225	1500	1225	1500	1225	1500	1250	975	1250	1025	1250	1025	1250	1100	1150	1100	1150	1100	1100	1100	1525	1150	1525	1375	1525	1525	1525	1525	1450	1675	1450	1875	1575	1875	1575	1875
	"c" Size Bar #	16	16	19	19	19	19	19	19	22	19	22	19	19	19	19	19	19	19	19	19	19	19	22	22	22	22	19	19	19	22	22	22	22	22	22	22	22	22	22	22	25	25
	"c" Dim "C" (mm)	950	850	1150	1000	1375	1300	1675	1375	1850	1450	1850	1450	1175	1100	1375	325	1700	1525	2000	1575	2200	1625	2275	1700	2275	1700	1300	1200	1675	1575	2350	1725	2575	1950	2700	2000	2750	2075	2825	2075	2825	2075
	*"e" Size Bar #	13	13	13	13	13	13	13	13	13	13	16	16	13	13	13	13	13	13	13	13	13	13	16	16	16	16	13	13	13	13	13	13	13	13	13	13	16	16	16	16	19	19
Quantity	Concrete m^3/m	3.97	4.15	4.15	5.41	4.34	5.74	4.52	6.09	4.88	6.50	5.23	6.92	5.11	7.09	5.30	7.35	5.56	7.79	5.82	8.18	6.12	8.61	6.42	9.18	6.85	9.66	6.67	9.26	6.87	9.66	7.14	10.0	7.43	10.5	7.82	11.1	8.25	11.5	8.74	12.2	9.11	12.7
	Reinforcement kg/m	551	567	567	735	622	735	684	759	723	818	711	845	808	899	838	961	892	987	914	1024	933	1028	1043	1115	1091	1137	985	1056	1064	1165	1125	1220	1201	1259	1240	1299	1311	1426	1315	1455	1491	1652

* See Note 5

``d'' bars, for earth covers up to and including 3.0 m								
Span (mm)	1220	1520	1830	2135	2440	3050	3660	4270
Number	5	6	8	10	13	14	16	19

Caltrans Metric

DIST	COUNTY	ROUTE	KILOMETER POST TOTAL PROJECT	SHEET NO.	TOTAL SHEETS

REGISTERED CIVIL ENGINEER

July 1, 2004
PLANS APPROVAL DATE

REGISTERED PROFESSIONAL ENGINEER Dallas Forester No. C37765 Exp. 12-31-04 CIVIL STATE OF CALIFORNIA

The State of California or its officers or agents shall not be responsible for the accuracy or completeness of electronic copies of this plan sheet.

To get to the Caltrans web site, go to: http://www.dot.ca.gov

NOTES

1. For boxes with span or height less than any of those shown in table, use next greater size box concrete dimensions and reinforcement. Make necessary changes in bar lengths and quantities.
2. For boxes with span or height or cover greater than those shown in tables, a special design is required.
3. Quantities are approximate and for design purposes only.
4. It is permissable to eliminate the 180° hooks on every other "e" bar.
5. "e" bars are at half spacing.
6. Provide paving notch when top is exposed and when pavement is portland cement concrete, and adjust quantities.
7. For design and details not shown, see Standard Plan D82.
8. This plan sheet may be used for multiple cell culverts by making necessary adjustments.

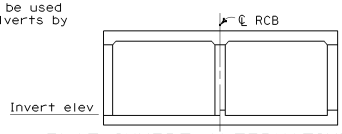

FLAT INVERT ALTERNATIVE

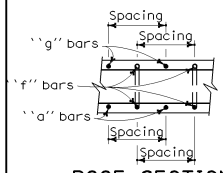

ROOF SECTION
SPANS 1220 mm
THRU 2440 mm

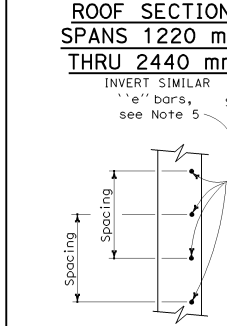

EXTERIOR WALL SECTION
SPANS 1220 mm
THRU 2440 mm

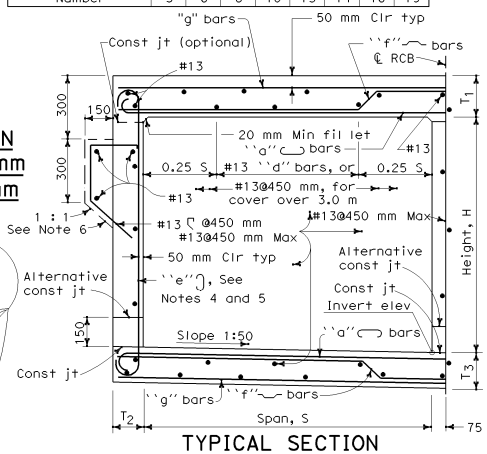

TYPICAL SECTION
SPANS 1220 mm THRU 2440 mm

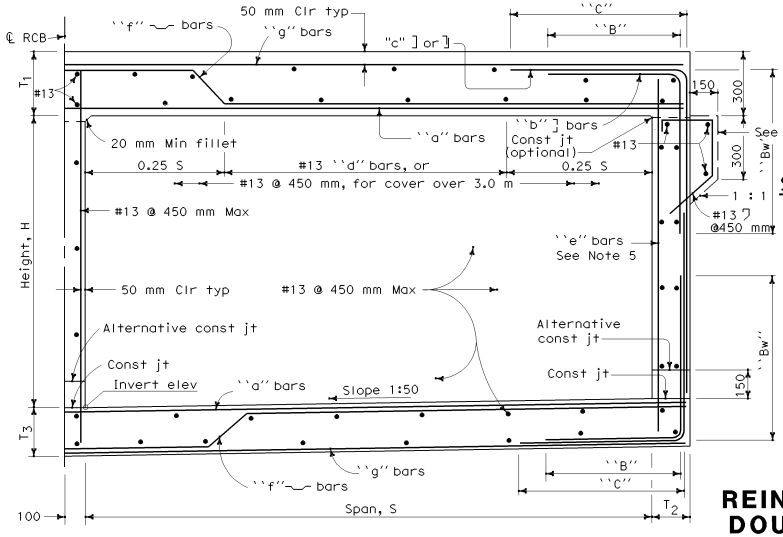

TYPICAL SECTION
SPANS 3050 mm THRU 4270 mm

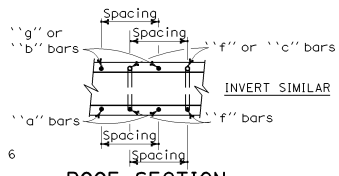

ROOF SECTION
SPANS 3050 mm THRU 4270 mm

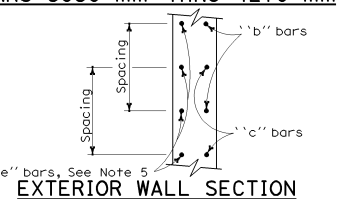

EXTERIOR WALL SECTION
SPANS 3050 mm THRU 4270 mm

STATE OF CALIFORNIA
DEPARTMENT OF TRANSPORTATION

CAST-IN-PLACE REINFORCED CONCRETE DOUBLE BOX CULVERT

NO SCALE

ALL DIMENSIONS ARE IN MILLIMETERS UNLESS OTHERWISE SHOWN

D81

2004 Std PLAN D81

04-20-04

Back to Table of Contents

DESIGN NOTES

Specifications:
Design:
Bridge Design Specification (1983 AASHTO Specifications with revisions by Caltrans)
Load Factors: 1.5 D + 1.5 E + 2.5 (L + 1)
Where D=Dead Load
E=Earth Load
L=Live Load
I =Impact
Capacity reduction factor is included.

Loading:
Live load:
HS20-44 truck
Apply impact only to the roof slab.

Earth Cover (mm)	Impact (%)
Up to 300	30
301 to 600	20
601 to 900	10
Over 900	0

No surcharge on walls due to live load.
Earth load:
Earth pressures for two conditions:
22.0 kPa/m vertical, 6.6 kPa/m horizontal.
22.0 kPa/m vertical, 22.0 kPa/m horizontal.

Unit stresses:
f'_c = 25 MPa
f_y = 400 MPa

Distribution ``d'' bars:
Up to and including 3.0 m cover
Expressed as a percent of main positive reinforcement required: $\frac{100}{0.05726\sqrt{S}}$, Max 50%.

Over 3.0 m cover
#13 @ 450 mm maximum.

Shear:
Maximum allowable shear, $v_c = 0.291\sqrt{f'_c}$, MPa

Exclusions:
Compressive reinforcement and negative-moment reduction (for continuity) do not apply.
Axial loading on members has not been considered.

CONSTRUCTION NOTES

Construction loads:
Strutting required as shown on Standard Plan D88. Strutting may be required on culvert extensions when existing parapet is removed.

Expansion joints:
Invert:
No expansion joints shall be permitted.

Roof and Walls:
When cover is less than span length-
Place 13 mm expansion joint filler at 9 m± centers outside the paved roadway lanes and place Bridge Detail 3-2, Standard Plan B0-3, at 9 m centers under paved roadway lanes.
When cover is more than span length-
Place 13 mm premolded expansion joint filler at 9 m± centers and additional 13 mm premolded expansion joints at locations of change in foundation character, as directed by the Engineer.

Construction joints:
Temporary joints may be permitted if normal (or radial) to ℄ of RCB. Otherwise, the contractor is to submit a proposal for consideration.

Cutoff walls:
1.2 m cutoff walls are to be provided at inlet and/or outlet unless adjacent channel is lined and unless otherwise shown. These walls are to be extended if scour conditions warrant.

Earthwork:
See Standard Plan A62E.

Backfill:
See Standard Specifications, except that the difference in level of backfill (against outside walls) shall not exceed 600 mm.

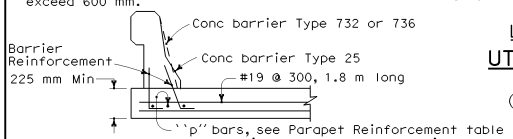

BARRIER SECTION (9.0 m MINIMUM)

GENERAL NOTES

Designation:
Standard single or multiple box culverts are shown on plans as span times height with maximum cover over roof thus: 2440 mm x 1520 mm RCB with 3 m or DBL 3050 mm x 1520 mm RCB with 6 m, followed by alternatives.

Alternatives:
Single cell: Invert will be sloped unless ``trapezoidal invert'', ``flat invert'' or ``V invert'' is included in designation.
Multiple cell: Invert will be vee unless ``flat invert'' is specified. Ends of culvert will be rounded unless ``square ends'' are designated. Parapets will be as shown unless designated in plans. Such designations may be different for inlet and outlet ends.

Quantities:
Quantities are for the sloped or vee invert and do not include ``d'' bars, nor splices in longitudinal bars, nor temperature reinforcement for exposed roof, nor concrete or reinforcement for parapets, cutoff walls or paving notches.

Reinforcement placement:
Main reinforcement is to be placed transverse or, for curved culverts, radial. When radial, reinforcing spacing of the ``a'', ``f'' and ``g'' bars is measured along the centerline. Stagger splices not shown. Hooks may be rotated or tilted, as necessary, for clearance.

Special reinforcement coverage:
Box standard plans are not to be used for culverts in a corrosive environment or where there is a severe abrasive flow condition or in freeze-thaw locations.

Special design:
Required for culverts with conditions, loads, design bearing pressures or sizes greater than those given on this plan or Standard Plans D80 & D81. Also required for multiple cell culverts with unequal spans. For culverts with railroad loading, see the current AREA design specification.

3 or more cells:
For culverts with more than two cells, use dimensions and reinforcement for the standard ``double box culvert'' and adjust quantities accordingly.

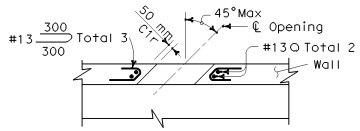

PART PLAN-SECTION

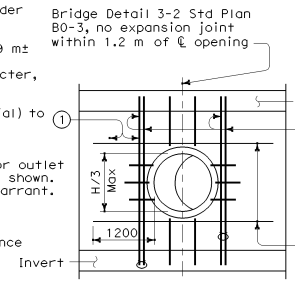

LONGITUDINAL SECTION

UTILITY OPENING-WALL

H= Height of box

(1) Adjacent to each side of the opening, place additional bars aquivalent to half the interrupted main reinforcement.

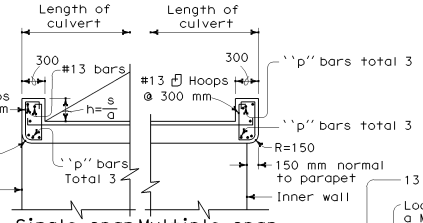

Single span Multiple span

PARAPET DETAIL

s = Clear span (mm)
a = 12 cosine skew angle

Parapet ``p'' bars			
Span \ Skew Angle	0° TO 15°	16° TO 30°	31° TO 45°
1220 mm	#13	#13	#13
1830 mm	#13	#13	#16
2440 mm	#13	#16	#19
3050 mm	#16	#19	#22
3660 mm	#19	#22	#25
4270 mm	#22	#25	#29

PARAPET REINFORCEMENT

Height \ Cover	3 m	6 m
1830 mm	95	150
2440 mm	105	160
3050 mm	115	170
3660 mm	125	180
4270 mm	135	190

DESIGN BEARING PRESSURE (kPa)

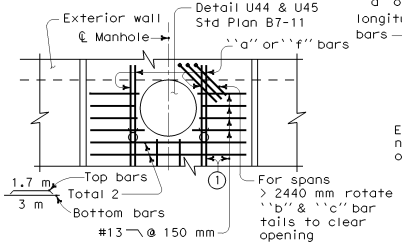

PART PLAN

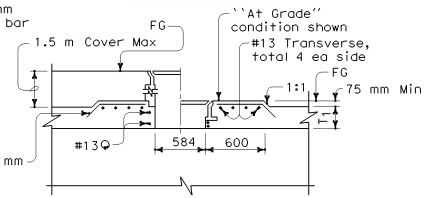

PART LONGITUDINAL SECTION

MANHOLE

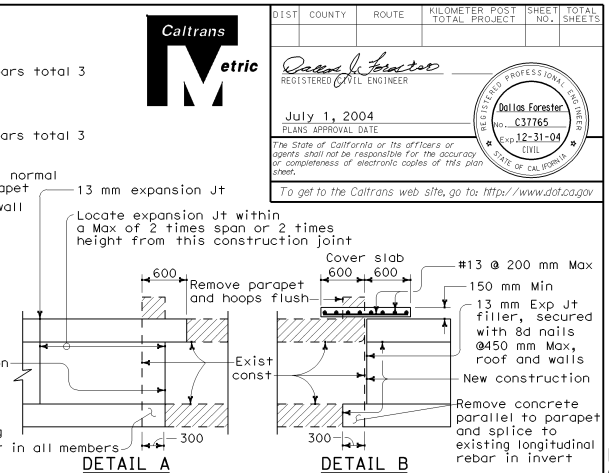

DETAIL A

(20° maximun skew as shown. If existing longitudinal and transverse reinforcing bars in top slab are lap spliced with new longitudinal and transverse reinforcing bars, the 20° skew may be exceeded. Lap splicing may require removal of top slab in excess of 600 mm shown.

DETAIL B

(Single cell only, no skew allowed, 300 mm minimum cover.)

CULVERT EXTENSION

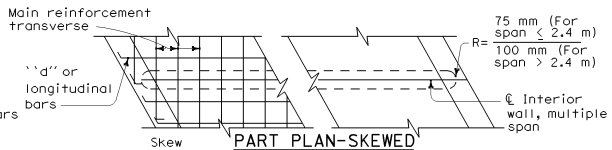

PART PLAN-SKEWED

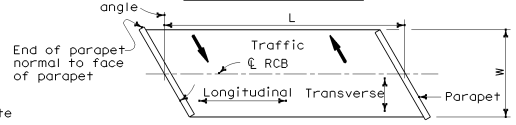

RCB TERMINOLOGY

STATE OF CALIFORNIA
DEPARTMENT OF TRANSPORTATION

CAST-IN-PLACE REINFORCED CONCRETE BOX CULVERT MISCELLANEOUS DETAILS

NO SCALE

ALL DIMENSIONS ARE IN MILLIMETERS UNLESS OTHERWISE SHOWN

D82

Caltrans Metric

DIST	COUNTY	ROUTE	KILOMETER POST TOTAL PROJECT	SHEET NO.	TOTAL SHEETS

REGISTERED CIVIL ENGINEER
July 1, 2004
PLANS APPROVAL DATE
REGISTERED PROFESSIONAL ENGINEER Dallas Forester No. C37765 Exp. 12-31-04 CIVIL STATE OF CALIFORNIA

The State of California or its officers or agents shall not be responsible for the accuracy or completeness of electronic copies of this plan sheet.

To get to the Caltrans web site, go to: http://www.dot.ca.gov

2004 Std PLAN D82

05-27-04

Back to Table of Contents

DIST	COUNTY	ROUTE	KILOMETER POST TOTAL PROJECT	SHEET NO.	TOTAL SHEETS

Caltrans Metric

REGISTERED CIVIL ENGINEER

July 1, 2004
PLANS APPROVAL DATE

Dallas Forester No. C37765 Exp. 12-31-04 CIVIL — REGISTERED PROFESSIONAL ENGINEER — STATE OF CALIFORNIA

The State of California or its officers or agents shall not be responsible for the accuracy or completeness of electronic copies of this plan sheet.

To get to the Caltrans web site, go to: http://www.dot.ca.gov

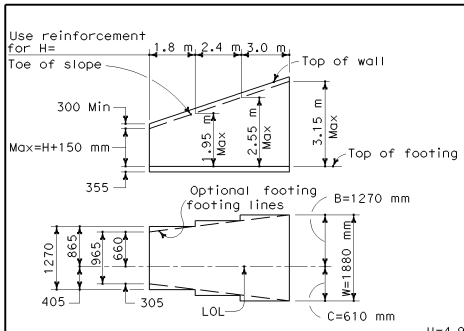

TYPICAL LAYOUT EXAMPLE

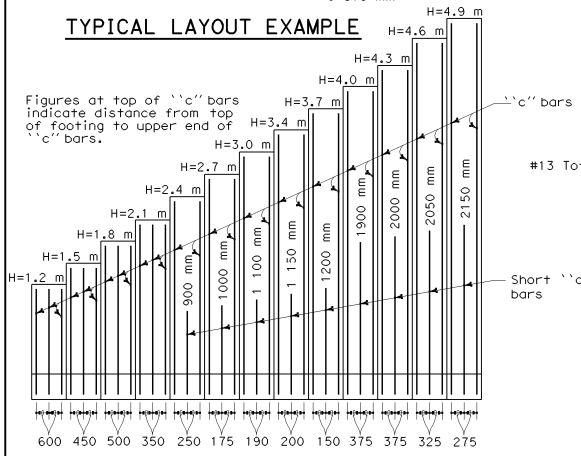

NOTE

Where 1 : 1.5 surcharge exceeds 1.5 m, use Type 2 retaining wall.

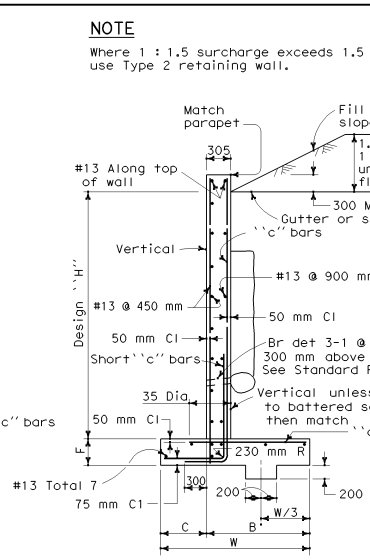

TYPICAL SECTION
H=1.2 m THRU 3.7 m

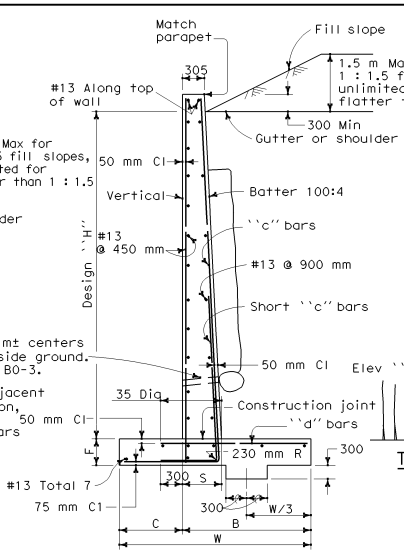

TYPICAL SECTION
H=4.0 m THRU 4.9 m

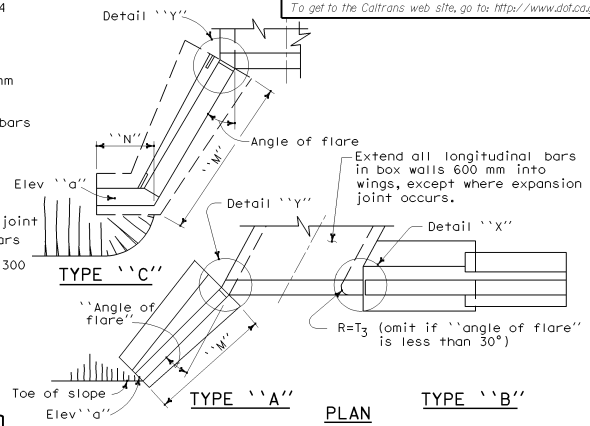

Where design ``H'' exceeds 2.7 m or length of wingwall exceeds 1.5 ``H'', place 13 mm Exp joint filler at junction of box and wall.

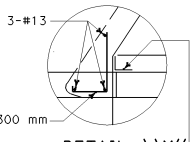

DETAIL ``X''

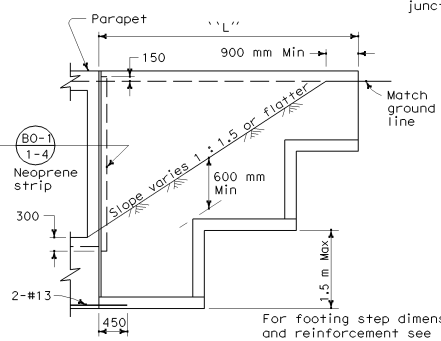

For footing step dimensions and reinforcement see ``Footing Step'' on Std Plan B3-8.

ELEVATION

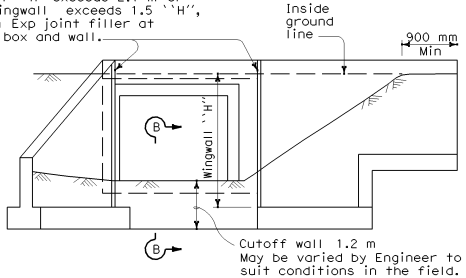

END ELEVATION

TYPE ``A'' TYPE ``B''

STRAIGHT WINGWALLS

REINFORCED CONCRETE WINGWALLS

``H'' (m)	1.2	1.5	1.8	2.1	2.4	2.7	3.0	3.4	3.7	4.0	4.3	4.6	4.9
W (mm)	965	1120	1270	1420	1575	1730	1880	2030	2185	2335	2490	2640	2795
C (mm)	305	355	405	455	510	560	610	660	710	760	815	865	915
B (mm)	660	765	865	965	1065	1170	1270	1370	1475	1575	1675	1775	1880
F (mm)	355												
Batter	None									4:100			
S (mm)	305	305	305	305	305	305	305	305	305	465	475	490	500
``c'' Bars	#13@600	#13@450	#16@500	#16@350	#16@250	#16@175	#19@190	#22@200	#22@150	#29@375	#32@375	#32@325	#32@275
``d'' Bars	#13@600	#13@450	#16@500	#16@350	#16@250	#19@350	#22@380	#25@400	#22@300	#25@375	#29@375	#29@325	#29@275
Conc m3/m	0.80	0.95	1.10	1.23	1.38	1.53	1.68	1.83	1.98	2.56	2.76	2.96	3.16
Reinf kg/m	19	24	28	37	45	55	73	92	113	109	134	155	186

Quantities do not include that portion above the design ``H'' limit.

NOTES

Unit Stresses: f_s =165 MPa, f_c =9 MPa, n=10

Maximum Toe Pressure = 140 kPa

Elevations, length and angle of flare of wings may be varied by the Engineer to suit conditions encountered in the field. Walls designed for 600 mm liveload surcharge, 1 : 1.5 sloping surcharge not to exceed 1.5 m in elevation plus 600 mm liveload surcharge, or unlimited 1:2 surcharge.

Dimensions ``H'',``L'',``M'',``N'', Elevation ``a'' and ``Angle of flare'' (as apply) are shown on the plans.

Wall height may be exceeded by 150 mm before going to next greater ``H''.

Eliminate cutoff wall if adjacent channel is paved and skew is 20 maximum.

For wall offset values, see Standard Plan B3-8.

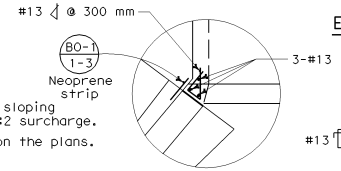

DETAIL ``Y''

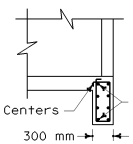

SECTION B-B

STATE OF CALIFORNIA
DEPARTMENT OF TRANSPORTATION

BOX CULVERT WINGWALLS TYPES A, B AND C

NO SCALE

ALL DIMENSIONS ARE IN MILLIMETERS UNLESS OTHERWISE SHOWN

D84

04-01-04

Back to Table of Contents

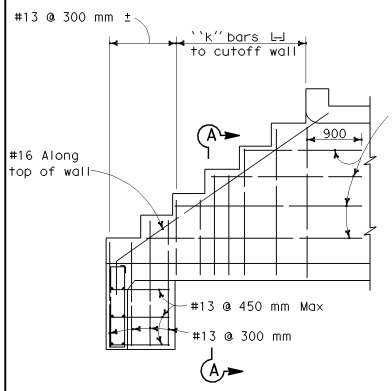

LONGITUDINAL SECTION
Showing reinforcement in outside face

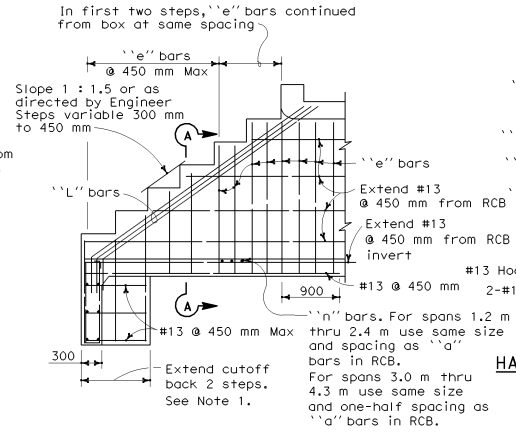

LONGITUDINAL SECTION
Showing reinforcement in inside face

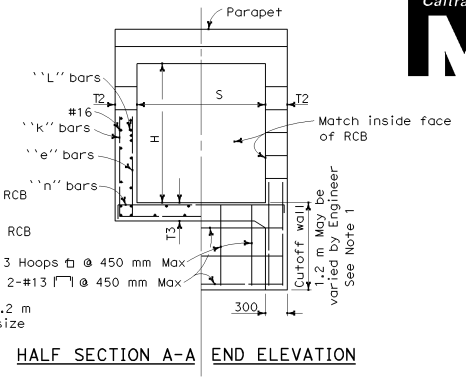

HALF SECTION A-A END ELEVATION

Dimensions S and T_3 to be same as adjacent RCB.
T_2 = Same as adjacent RCB (200 mm Min).

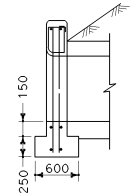

SECTION B-B

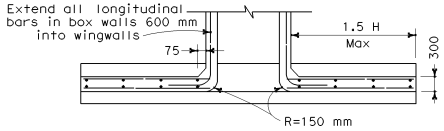

SECTION C-C

TYPE ``E'' STEPPED WINGWALL (SINGLE BOX CULVERT)

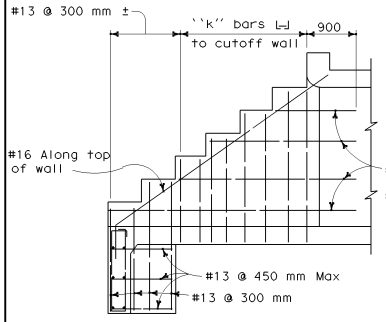

LONGITUDINAL SECTION
Showing reinforcement in outside face

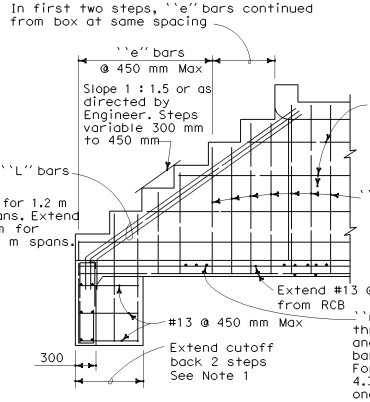

LONGITUDINAL SECTION
Showing reinforcement in inside face

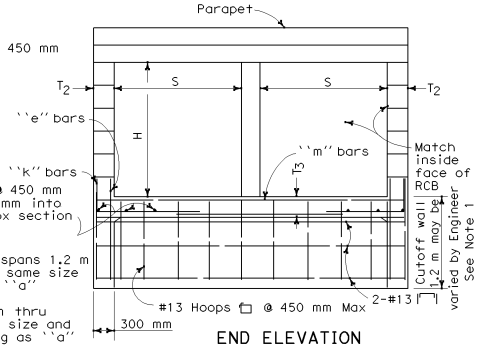

END ELEVATION

Dimensions S and T_3 to be same as adjacent RCB.
T_2 = Same as adjacent RCB (200 mm Min).

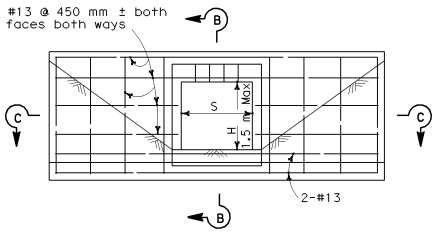

ELEVATION

TYPE ``D'' STRAIGHT WINGWALL

Details similar for multiple span boxes.
For Parapet Details not shown see Standard Plan D82.

TYPE ``E'' STEPPED WINGWALL (MULTIPLE BOX CULVERT)

NOTES

1. Eliminate cutoff walls if adjacent channel is paved.
2. For ``H'' not shown use reinforcement for next greater height.

TABLE OF REINFORCEMENT FOR TYPE ``E'' WINGWALLS

H (m)	(See Note 2)	0.9	1.2	1.5	1.8	2.1	2.4	3.0	3.7	4.3
``k'' Bars	Bar No.	13	13	16	16	16	16	16	16	16
	Spacing(mm)	300	300	300	250	225	200	175	125	100
``L'' Bars	Bar No.	16	16	19	19	22	22	22	22	22
	Number each wall	2	2	3	3	3	3	3	3	3

DIST	COUNTY	ROUTE	KILOMETER POST TOTAL PROJECT	SHEET NO.	TOTAL SHEETS

REGISTERED CIVIL ENGINEER
July 1, 2004
PLANS APPROVAL DATE

REGISTERED PROFESSIONAL ENGINEER Dallas Forester No. C37765 Exp. 12-31-04 CIVIL STATE OF CALIFORNIA

The State of California or its officers or agents shall not be responsible for the accuracy or completeness of electronic copies of this plan sheet.

To get to the Caltrans web site, go to: http://www.dot.ca.gov

STATE OF CALIFORNIA
DEPARTMENT OF TRANSPORTATION

BOX CULVERT WINGWALLS TYPES D AND E

NO SCALE

ALL DIMENSIONS ARE IN MILLIMETERS UNLESS OTHERWISE SHOWN

D85

04-01-04

Back to Table of Contents

DIST	COUNTY	ROUTE	KILOMETER POST TOTAL PROJECT	SHEET NO.	TOTAL SHEETS

Caltrans Metric

REGISTERED CIVIL ENGINEER

July 1, 2004
PLANS APPROVAL DATE

REGISTERED PROFESSIONAL ENGINEER Dallas Forester No. C37765 Exp. 12-31-04 CIVIL STATE OF CALIFORNIA

The State of California or its officers or agents shall not be responsible for the accuracy or completeness of electronic copies of this plan sheet.

To get to the Caltrans web site, go to: http://www.dot.ca.gov

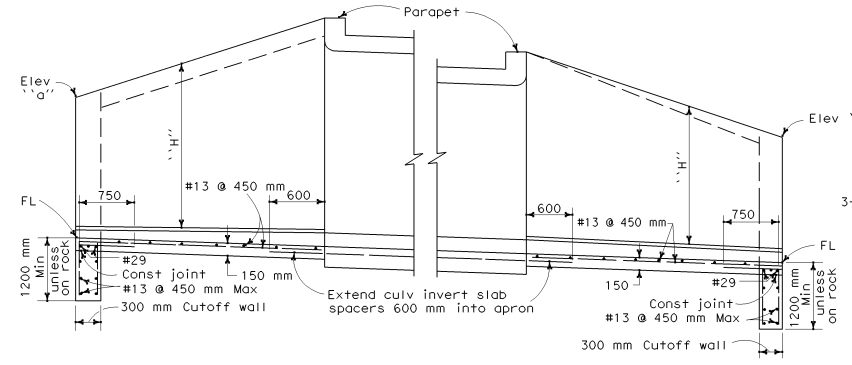

TYPICAL WITH STIFFENING BEAM TYPICAL WITHOUT STIFFENING BEAM

PART LONGITUDAL SECTION

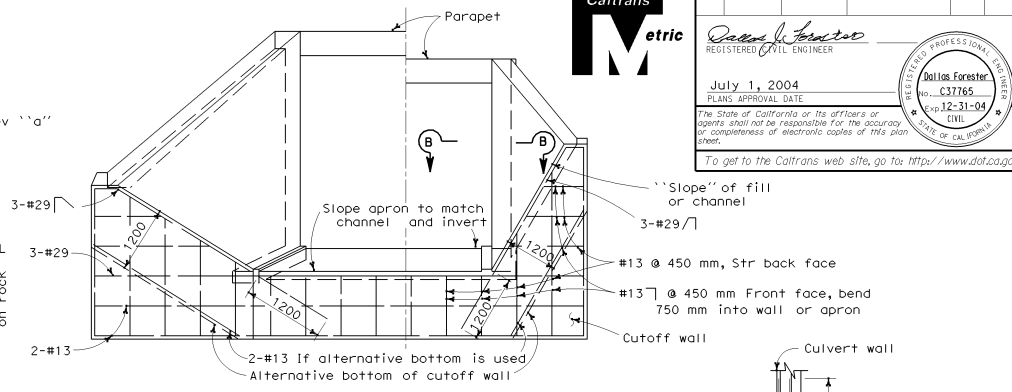

END ELEVATION

WITHOUT STIFFENING BEAM

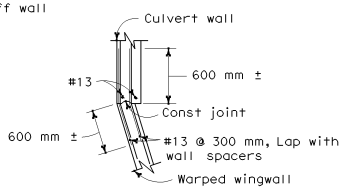

SECTION B-B

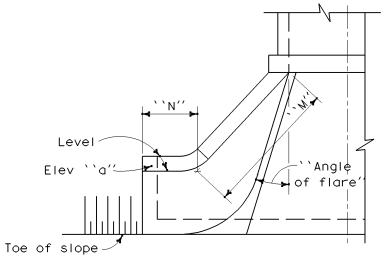

ALTERNATIVE WARPED WINGWALL

Use where additional protection to toe of embankment is required.

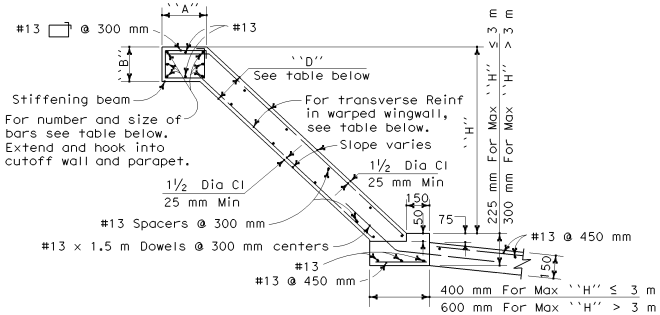

SECTION C-C

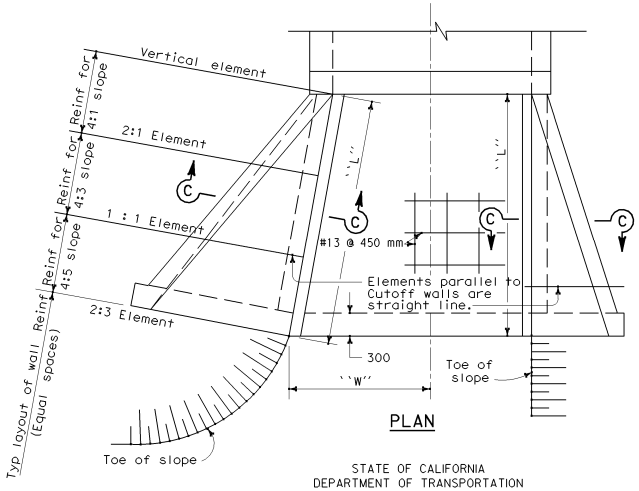

PLAN

WARPED WINGWALLS								
WALL DIMENSIONS AND REINFORCING								
Element Slope	``H''	2.4 m or less	3.0 m	3.7 m	4.3 m	4.9 m	5.5 m	6.1 m
4:1	Front face Reinf	#13@300	#13@175	#16@175	#16@125	#19@150	#22@175	#22@150
	Rear face Reinf	#13@300	#13@300	#13@300	#13@300	#13@300	#13@300	#13@300
4:3	Front face Reinf	#13@300	#13@300	#13@300	#13@300	#13@250	#13@200	#13@150
	Rear face Reinf	#13@300	#13@300	#13@300	#13@250	#13@175	#13@150	#16@200
4:5	Front face Reinf	#13@300	#13@300	#13@300	#13@300	#13@300	#13@300	#13@300
	Rear face Reinf	#13@200	#13@200	#13@125	#16@150	#19@175	#19@150	#22@150
``D'' at Cutoff Wall (mm)		150	150	150	190	200	240	280
``D'' at Culvert (mm)		150	150	150	200	240	280	330

STIFFENING BEAM DIMENSIONS AND REINFORCING									
``H'' Max \ ``L''	3.7 m	4.3 m	4.9 m	5.5 m	6.1 m	7.6 m	9.1 m	10.7 m	12.2 m or more
1.8 m	No beam. Place 2-#19 in each face along top of wall.								
2.4 m									
3.0 m				``A''= 300					
3.7 m				``B''= 225					
4.3 m						``A''= 450			
4.9 m	Total 6-#19							``A''= 560	
5.5 m				``B''= 300					
6.1 m			Total 6-#22				``B''= 300	``A''= 600	
						Total 6-#25	``B''= 450		
							Total 8-#29		

NOTES

Walls designed for 600 mm surcharge; earth density = 1900 kg/m^3; equivalent fluid pressure = 5.66 KPa/m.
Vary ``D'' of warped wall uniformly from that at cutoff wall to that at culvert, for maximum ``H'' > 3.7m.
Where abrasion is anticipated increase apron thickness to 175 mm minimum to provide 50 mm minimum reinforcement coverage.
Dimensions ``L'', ``W'', ``H'', ``M'', ``N'', Elevation ``a'',`` Angle of flare'', and end ``Slope'' (as apply) are shown on the plans.

STATE OF CALIFORNIA
DEPARTMENT OF TRANSPORTATION

BOX CULVERT WARPED WINGWALLS

NO SCALE

ALL DIMENSIONS ARE IN MILLIMETERS UNLESS OTHERWISE SHOWN

D86A

04-01-04

Back to Table of Contents

DIST	COUNTY	ROUTE	KILOMETER POST TOTAL PROJECT	SHEET NO.	TOTAL SHEETS

REGISTERED CIVIL ENGINEER

July 1, 2004
PLANS APPROVAL DATE

REGISTERED PROFESSIONAL ENGINEER Dallas Forester No. C37765 Exp. 12-31-04 CIVIL STATE OF CALIFORNIA

The State of California or its officers or agents shall not be responsible for the accuracy or completeness of electronic copies of this plan sheet.

To get to the Caltrans web site, go to: http://www.dot.ca.gov

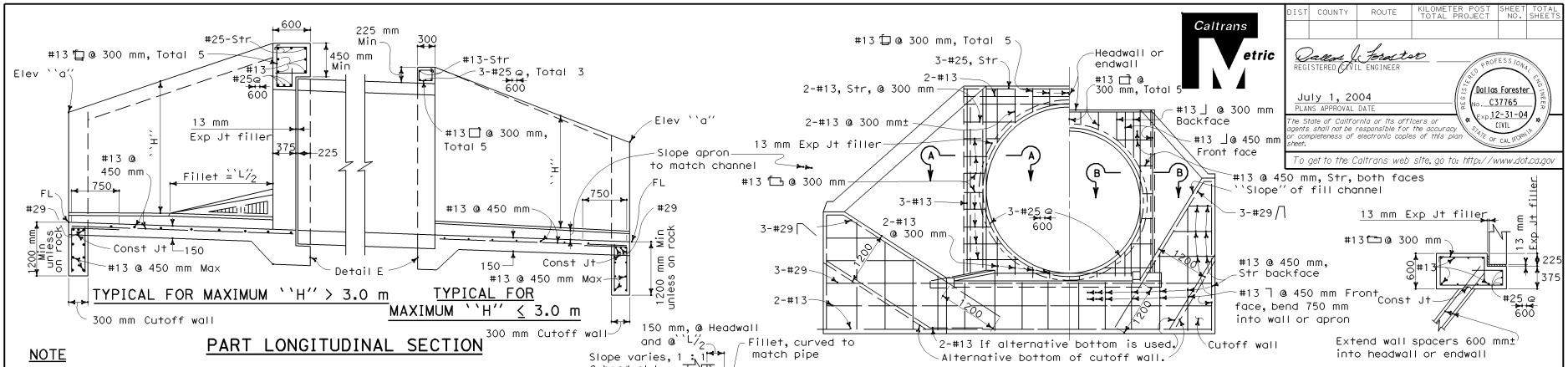

PART LONGITUDINAL SECTION

NOTE

RCP shown. Metal pipe similar except eliminate the expansion joint and use hook bolts @ 480 mm± spacing. Size and length provided by manufacturer.

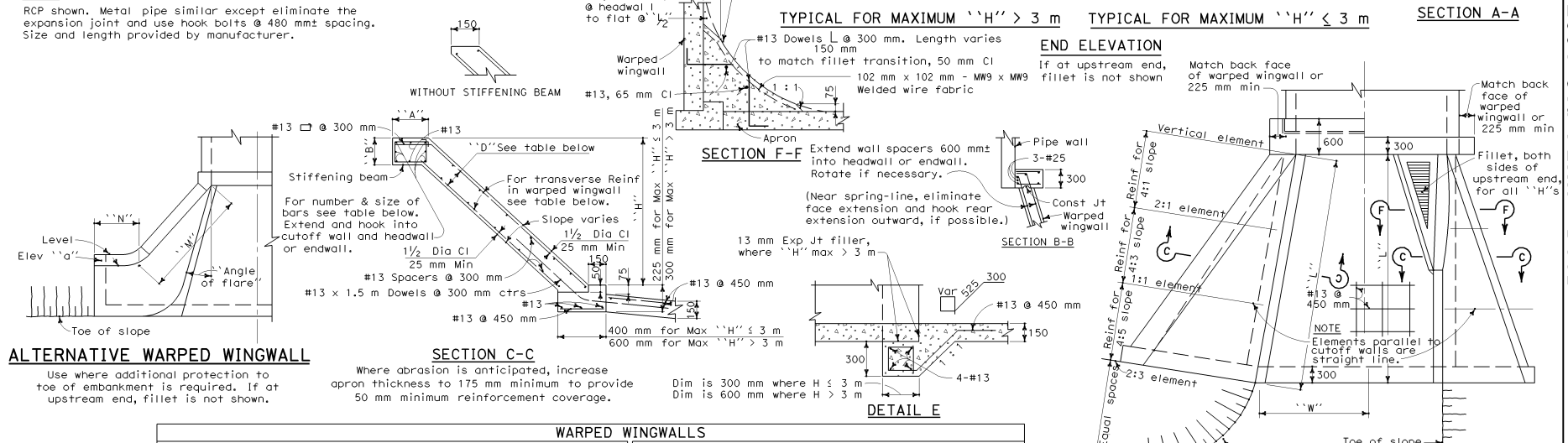

WARPED WINGWALLS

WALL DIMENSIONS AND REINFORCING

Element Slope	``H''	2.4 m or less	3.0 m	3.7 m	4.3 m	4.9 m	5.5 m	6.1 m
4:1	Front face Reinf	#13@300	#13@175	#16@175	#16@125	#19@150	#22@175	#22@150
	Rear face Reinf	#13@300	#13@300	#13@300	#13@300	#13@300	#13@300	#13@300
4:3	Front face Reinf	#13@300	#13@300	#13@300	#13@300	#13@250	#13@200	#13@150
	Rear face Reinf	#13@300	#13@300	#13@300	#13@250	#13@175	#13@150	#16@200
4:5	Front face Reinf	#13@300	#13@300	#13@300	#13@300	#13@300	#13@300	#13@300
	Rear face Reinf	#13@200	#13@200	#13@125	#16@150	#19@175	#19@150	#22@150
``D'' at Cutoff Wall (mm)		150	150	150	190	200	240	280
``D'' at Culvert (mm)		150	150	150	200	240	280	330

STIFFENING BEAM DIMENSIONS AND REINFORCING

``H'' Max \ ``L''	3.7 m	4.3 m	4.9 m	5.5 m	6.1 m	7.6 m	9.1 m	10.7 m	12.2 m or more
1.8 m	No beam. Place 2-#19 in each face along top of wall.								
2.4 m									
3.0 m						``A'' = 300			
3.7 m									
4.3 m	Total 6-#19				``B'' = 225		``A'' = 450		
4.9 m						``B'' = 300			``A'' = 560
5.5 m				Total 6-#22			``B'' = 300	``A'' = 600	
6.1 m						Total 6-#25	``B'' = 450		
							Total 8-#29		

NOTES Walls designed for 600 mm surcharge; earth density = 1900 kg/m³; equivalent fluid pressure = 5.66 kPa/m.
Vary ``D'' of warped wall uniformly from that at cutoff wall to that at headwall or endwall, for maximum ``H'' > 3.7m.
Dimensions ``L'', ``W'', ``H'', ``M'', ``N'', Elevation ``a'', `` Angle of flare'', and end ``Slope'' (as apply) are shown on the plans.

STATE OF CALIFORNIA
DEPARTMENT OF TRANSPORTATION

PIPE CULVERT HEADWALLS, ENDWALLS AND WARPED WINGWALLS

NO SCALE

ALL DIMENSIONS ARE IN MILLIMETERS UNLESS OTHERWISE SHOWN

D86B

04-01-04

Back to Table of Contents

Caltrans Metric

DIST	COUNTY	ROUTE	KILOMETER POST TOTAL PROJECT	SHEET NO.	TOTAL SHEETS

REGISTERED CIVIL ENGINEER

July 1, 2004
PLANS APPROVAL DATE

Dallas Forester No. C37765 Exp. 12-31-04 CIVIL — REGISTERED PROFESSIONAL ENGINEER — STATE OF CALIFORNIA

The State of California or its officers or agents shall not be responsible for the accuracy or completeness of electronic copies of this plan sheet.

To get to the Caltrans web site, go to: http://www.dot.ca.gov

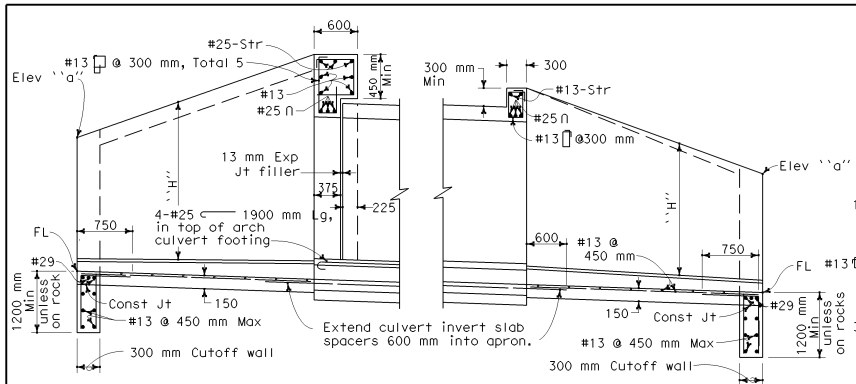

TYPICAL FOR MAXIMUM ``H'' > 3.0 m  TYPICAL FOR MAXIMUM ``H'' ≤ 3.0 m

PART LONGITUDINAL SECTION

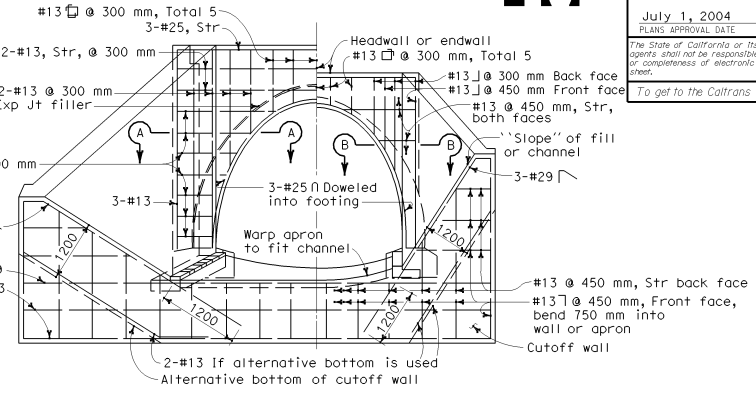

TYPICAL FOR MAXIMUM ``H'' > 3.0 m  TYPICAL FOR MAXIMUM ``H'' ≤ 3.0 m

END ELEVATION

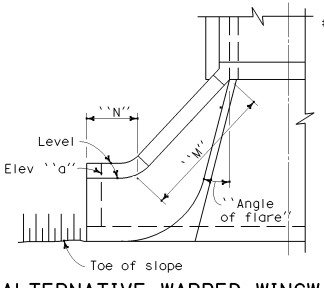

ALTERNATIVE WARPED WINGWALL

Use where additional protection to toe of embankment is required.

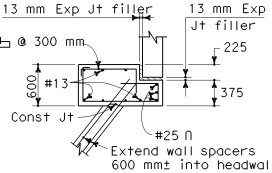

SECTION A-A

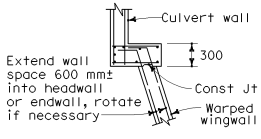

SECTION B-B

WITHOUT STIFFENING BEAM

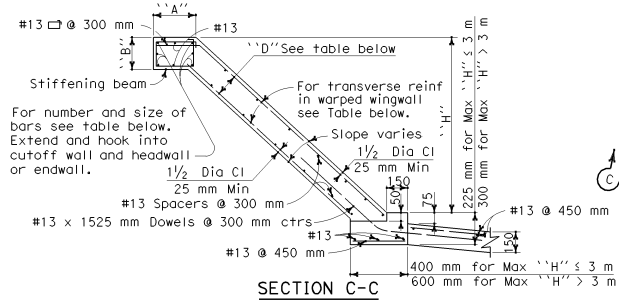

SECTION C-C

Where abrasion is anticipated, increase apron thickness to 175 mm minimum to provide 50 mm minimum reinforcement coverage.

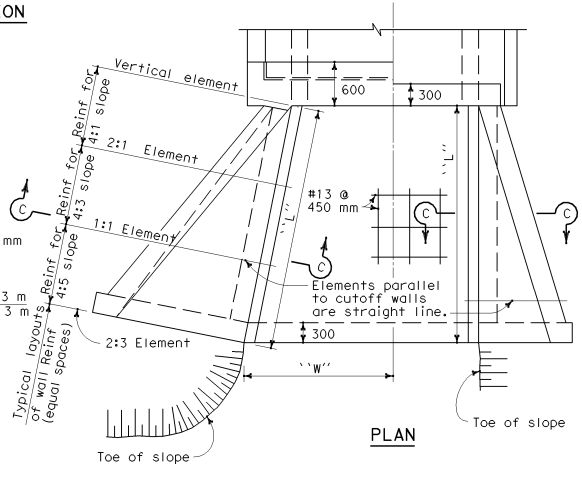

PLAN

WARPED WINGWALLS

WALL DIMENSIONS AND REINFORCING

Element Slope	``H''	2.4 m or less	3.0 m	3.7 m	4.3 m	4.9 m	5.5 m	6.1 m
4:1	Front face Reinf	#13@300	#13@175	#16@175	#16@125	#19@150	#22@175	#22@150
	Rear face Reinf	#13@300	#13@300	#13@300	#13@300	#13@300	#13@300	#13@300
4:3	Front face Reinf	#13@300	#13@300	#13@300	#13@300	#13@250	#13@200	#13@150
	Rear face Reinf	#13@300	#13@300	#13@300	#13@250	#13@175	#13@150	#16@200
4:5	Front face Reinf	#13@300	#13@300	#13@300	#13@300	#13@300	#13@300	#13@300
	Rear face Reinf	#13@200	#13@200	#13@125	#16@150	#19@175	#19@150	#22@150
``D'' at Cutoff Wall (mm)		150	150	150	190	200	240	280
``D'' at Culvert (mm)		150	150	150	200	240	280	330

STIFFENING BEAM DIMENSIONS AND REINFORCING

``H'' Max \ ``L''	3.7 m	4.3 m	4.9 m	5.5 m	6.1 m	7.6 m	9.1 m	10.7 m	12.2 m or more
1.8 m	No beam. Place 2-#19 in each face along top of wall.								
2.4 m				``A''= 300					
3.0 m				``B''= 225			``A''= 450		
3.7 m							``B''= 300		
4.3 m	Total 6-#19							``A''= 560	
4.9 m				Total 6-#22			``B''= 300		``A''= 600
5.5 m						Total 6-#25		``B''= 450	
6.1 m							Total 8-#29		

NOTES

Walls designed for 600 mm surcharge; earth load = 1900 kg/m³; equivalent fluid pressure = 5.66 KPa/m.
Vary ``D'' of warped wall uniformly from that at cutoff wall to that at headwall or endwall , for maximum ``H'' > 300 mm.
Dimensions ``L'', ``W'', ``H'', ``M'', ``N'', Elev ``a'', ``Angle of flare'', and end ``Slope'' (as apply) are shown on the plans.

STATE OF CALIFORNIA
DEPARTMENT OF TRANSPORTATION

ARCH CULVERT HEADWALLS, ENDWALLS AND WARPED WINGWALLS

NO SCALE

ALL DIMENSIONS ARE IN MILLIMETERS UNLESS OTHERWISE SHOWN

D86C

04-01-04

Back to Table of Contents

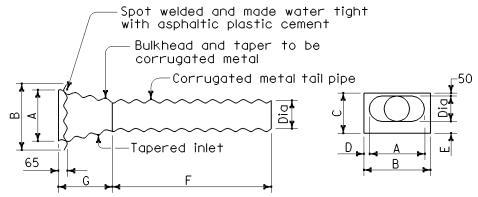

PLAN END VIEW

Bulkhead and taper of same thickness as tail pipe with 2.0 mm maximum.
Tail pipe of same thickness as downdrain pipe.

ENTRANCE TAPER - TYPE I ALTERNATIVE A

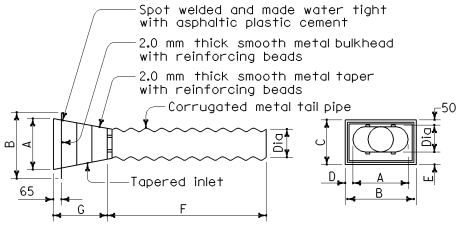

PLAN END VIEW

Tail pipe of same thickness as downdrain pipe.

ENTRANCE TAPER - TYPE I ALTERNATIVE B

CMP dimensions as tabulated below

P (mm)	250	375	450	525	675
O (mm)	200	300	375	450	600

Slip joint to be same thickness as downdrain pipe.

DIA (mm)	MIN L	M (mm)	N (mm)
200	3 m	450	200
300	5 m	500	300
375	8 m	600	375
450	9 m	750	400
600	12 m	900	450

Tapered inlet of same construction and dimensions as Type I- Alternative A or B except tail pipe length will be 0.6 m.

ENTRANCE TAPER - TYPE 2

Taper joints may be welded or riveted. Dimensions to be as tabulated below for Type I Alternatives A and B.

DIA (mm)	A (mm)	B (mm)	C (mm)	D (mm)	E (mm)	F (m)	G (m)
200	410	650	380	120	130	1.8	0.6
300	460	650	485	95	135	1.8	0.6
375	540	770	585	115	160	1.8	0.6
450	610	860	685	125	185	1.8	0.6
600	870	1170	890	150	240	1.2	1.2

ENTRANCE TAPER - TYPE I ALTERNATIVE A AND B

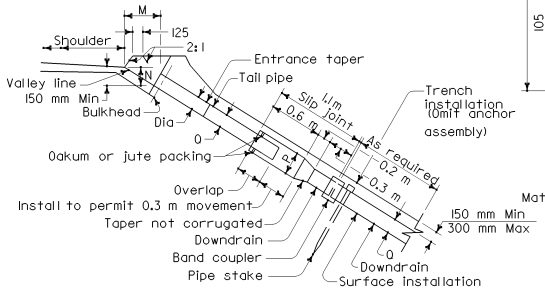

SECTION A-A (TYPE I)

NOTE

1. Cable, slip joint or anchor assembly to be used when specified.
2. Slip joint to be omitted when completely buried.
3. Slip joint for Type I entrance taper shown. Type 2 similar.

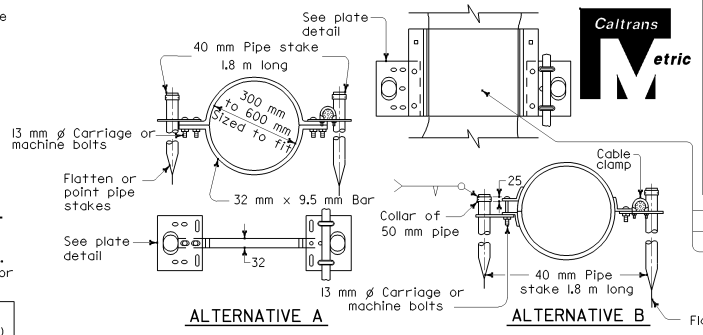

ALTERNATIVE A ALTERNATIVE B

CORRUGATED METAL PIPE DOWNDRAIN ANCHOR ASSEMBLY

Cable and cable clamps to be used when required by the Special Provisions.

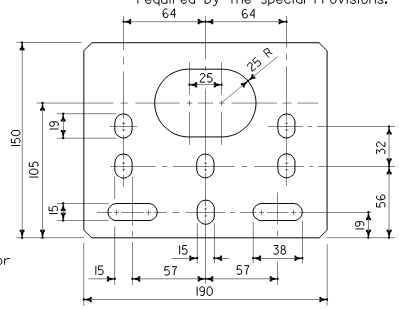

PLATE DETAIL

Material to be 6.4 mm plate galvanized after fabrication.

NOTES

1. All hardware to be galvanized after fabrication. All pipe stakes to be either galvanized after fabrication, or be fabricated from pre-galvanized pipe. If pre-galvanized pipe is used, weld areas shall be cleaned, and painted with zinc-rich primer.
2. Either Alternative A or Alternative B anchor assemblies and pipe stakes may be used at Contractor's option for corrugated steel pipe or corrugated aluminum pipe. Alternative A anchor assembly only to be placed in annular corrugation. Alternative A anchor assembly may be placed on annular coupling band if securely fastened on downstream side of joint. Alternative B anchor assembly to be fastened to pipe sections and not to a band coupler used to join sections.
3. For cable anchorage system details, see Standard Plan D87C.

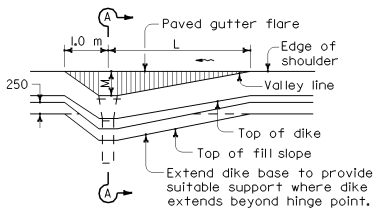

PLAN

MOUNTABLE DIKE TYPE I

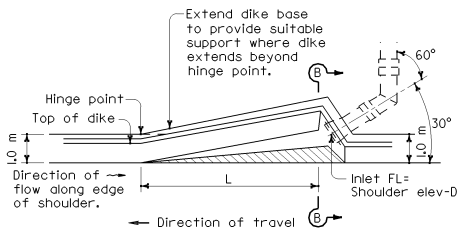

PLAN

MOUNTABLE DIKE TYPE 2

(For use on full freeway sections ONLY with grades of 2% or greater)

DIA D	MIN L
200 mm	5 m
300 mm	6 m
375 mm	9 m
450 mm	11 m
600 mm	14 m

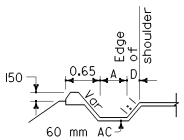

SECTION B-B

ENTRANCE TAPER AND PIPE DOWNDRAIN

STATE OF CALIFORNIA
DEPARTMENT OF TRANSPORTATION

CORRUGATED METAL PIPE DOWNDRAIN DETAILS

NO SCALE

ALL DIMENSIONS ARE IN MILLIMETERS UNLESS OTHERWISE SHOWN

D87A

DIST	COUNTY	ROUTE	KILOMETER POST TOTAL PROJECT	SHEET NO.	TOTAL SHEETS

REGISTERED CIVIL ENGINEER

July 1, 2004
PLANS APPROVAL DATE

REGISTERED PROFESSIONAL ENGINEER Glenn DeCou No. C34547 Exp. 9-30-05 CIVIL STATE OF CALIFORNIA

The State of California or its officers or agents shall not be responsible for the accuracy or completeness of electronic copies of this plan sheet.

To get to the Caltrans web site, go to: http://www.dot.ca.gov

2004 Std PLAN D87A

05-04-04

Back to Table of Contents

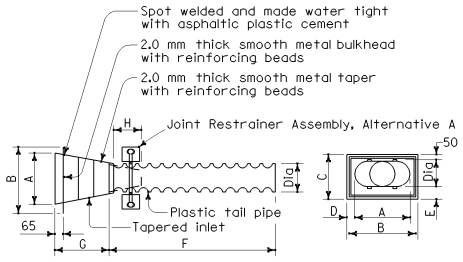

PLAN END VIEW

ENTRANCE TAPER - TYPE 1

Plastic Pipe dimensions as tabulated below

P (mm)	250	375	450	525	675
Q (mm)	200	300	375	450	600

DIA (mm)	MIN L	M (mm)	N (mm)
200	3 m	450	200
300	5 m	500	300
375	8 m	600	375
450	9 m	750	400
600	12 m	900	450

Taper joints may be welded or riveted. Dimensions to be as tabulated below.

DIA (mm)	A (mm)	B (mm)	C (mm)	D (mm)	E (mm)	F (m)	G (m)	H (mm)
200	410	650	380	120	130	1.8	0.6	300
300	460	650	485	95	135	1.8	0.6	300
375	540	770	585	115	160	1.8	0.6	350
450	610	860	685	125	185	1.8	0.6	400
600	870	1170	890	150	240	1.2	1.2	450

ENTRANCE TAPER - TYPE 1

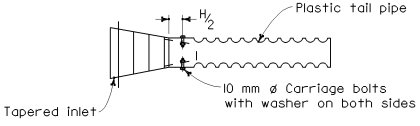

PLAN

Alternative tail pipe to entrance pipe connection

DETAIL A

(See Note 7)

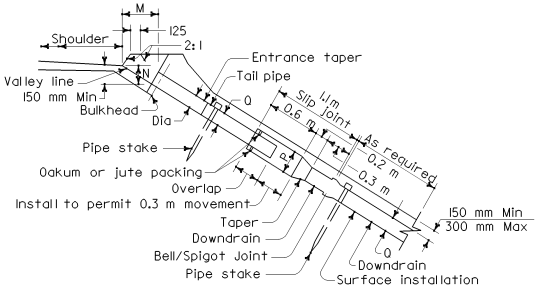

SECTION (TYPE 1)

NOTE

1. Cable or slip joint to be used when specified.
2. Slip joint to be omitted when completely buried.

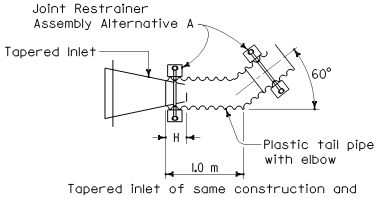

Tapered inlet of same construction and dimensions as Type 1.

ENTRANCE TAPER - TYPE 2

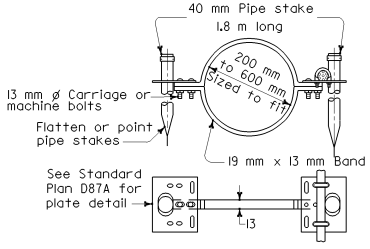

PLASTIC PIPE JOINT RESTRAINER ASSEMBLY

Alternative A

Caltrans Metric

DIST	COUNTY	ROUTE	KILOMETER POST TOTAL PROJECT	SHEET NO.	TOTAL SHEETS

REGISTERED CIVIL ENGINEER

July 1, 2004

PLANS APPROVAL DATE

REGISTERED PROFESSIONAL ENGINEER Glenn DeCou No. C34547 Exp. 9-30-05 CIVIL STATE OF CALIFORNIA

The State of California or its officers or agents shall not be responsible for the accuracy or completeness of electronic copies of this plan sheet.

To get to the Caltrans web site, go to: http://www.dot.ca.gov

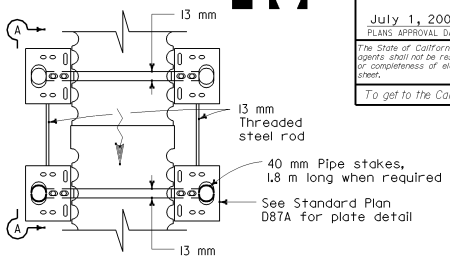

PLAN

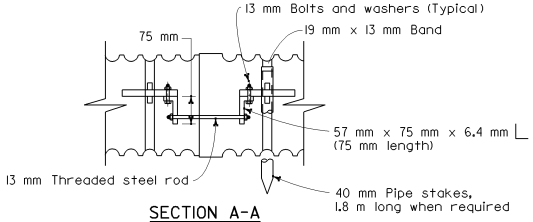

SECTION A-A PLASTIC PIPE JOINT RESTRAINER ASSEMBLY

Alternative B

NOTES

1. All hardware to be galvanized after fabrication. All pipe stakes to be either galvanized after fabrication, or be fabricated from pre-galvanized pipe. If pre-galvanized pipe is used, weld areas shall be cleaned, and painted with zinc-rich primer.
2. See Standard Plan D87A for details of entrance taper placement at dike.
3. Pipe stakes to be used with joint restrainer when specified.
4. Plastic pipe and fittings used for overside drains shall be from one manufacturer for each installation.
5. Entrance taper "H" dimension is length of insertion of metal taper into plastic pipe.
6. For cable anchorage system details, see Standard Plan D87C.
7. At contractors option, tail pipe and tapered inlet may be supplied from manufacturer as a pre-connected unit as shown in Detail A.

STATE OF CALIFORNIA
DEPARTMENT OF TRANSPORTATION

PLASTIC PIPE DOWNDRAIN DETAILS

NO SCALE

ALL DIMENSIONS ARE IN MILLIMETERS UNLESS OTHERWISE SHOWN

D87B

2004 Std PLAN D87B

05-04-04

Back to Table of Contents

DIST	COUNTY	ROUTE	KILOMETER POST TOTAL PROJECT	SHEET NO.	TOTAL SHEETS

Caltrans Metric

REGISTERED CIVIL ENGINEER

July 1, 2004
PLANS APPROVAL DATE

REGISTERED PROFESSIONAL ENGINEER Glenn DeCou No. C34547 Exp. 9-30-05 CIVIL STATE OF CALIFORNIA

The State of California or its officers or agents shall not be responsible for the accuracy or completeness of electronic copies of this plan sheet.

To get to the Caltrans web site, go to: http://www.dot.ca.gov

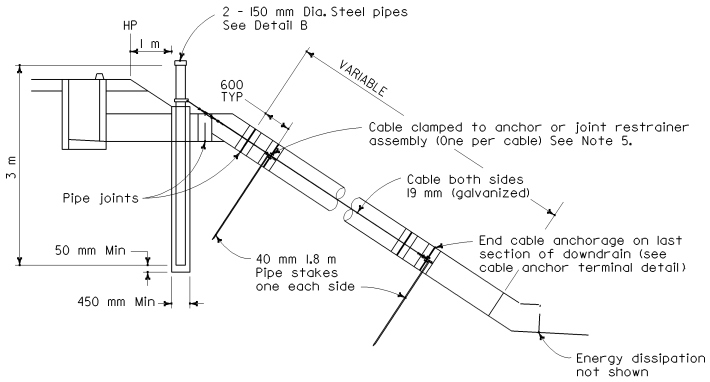

CABLE ANCHORAGE SYSTEM

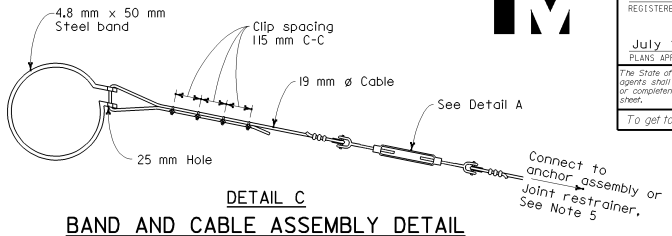

DETAIL C

BAND AND CABLE ASSEMBLY DETAIL
FOR CABLE ANCHORAGE SYSTEM

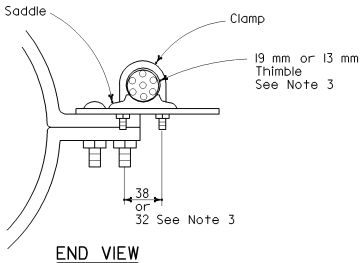

END VIEW

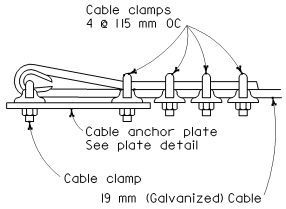

CABLE ANCHOR TERMINAL DETAIL

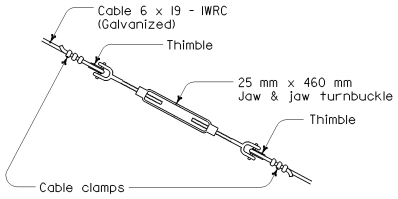

DETAIL A

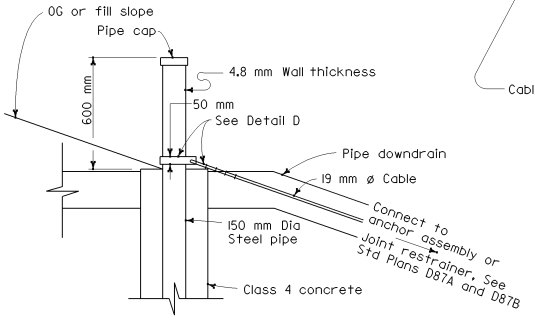

DETAIL B

STEEL PIPE PILE DETAILS
FOR CABLE ANCHORAGE SYSTEM

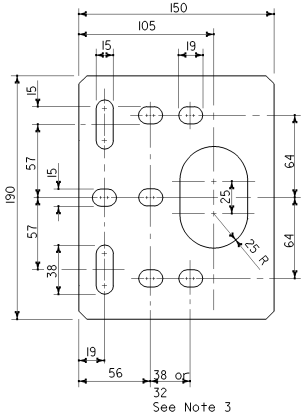

PLATE DETAIL

NOTES

1. All hardware to be galvanized after fabrication. All pipe stakes to be either galvanized after fabrication, or be fabricated from pre-galvanized pipe. If pre-galvanized pipe is used, weld areas shall be cleaned, and painted with zinc-rich primer.
2. Diameter of downdrain 600 mm maximum.
3. 19 mm ø cable shown, 13 mm ø cable is allowable for pipe downdrain diameters of 200 mm to 375 mm. Use 38 mm dimension for 19 mm ø cable and 32 mm dimension for 13 mm ø cable.
4. Slip joints not shown.
5. See Standard Plan D87A for Corrugated Metal Pipe Downdrain Anchor Assembly. See Standard Plan D87B for Plastic Pipe Joint Restrainer Assembly.

STATE OF CALIFORNIA
DEPARTMENT OF TRANSPORTATION

CABLE ANCHORAGE SYSTEM

NO SCALE

ALL DIMENSIONS ARE IN
MILLIMETERS UNLESS OTHERWISE SHOWN

D87C

2004 Std PLAN D87C

05-04-04

Back to Table of Contents

DIST	COUNTY	ROUTE	KILOMETER POST TOTAL PROJECT	SHEET NO.	TOTAL SHEETS

Caltrans Metric

REGISTERED CIVIL ENGINEER

July 1, 2004
PLANS APPROVAL DATE

REGISTERED PROFESSIONAL ENGINEER Glenn DeCou No. C34547 Exp. 9-30-05 CIVIL STATE OF CALIFORNIA

The State of California or its officers or agents shall not be responsible for the accuracy or completeness of electronic copies of this plan sheet.

To get to the Caltrans web site, go to: http://www.dot.ca.gov

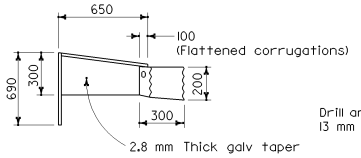

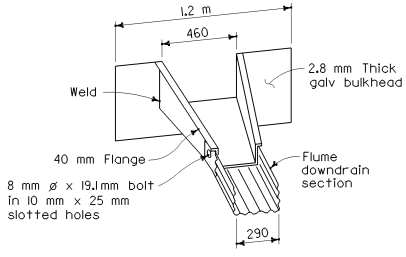

TAPERED INLET

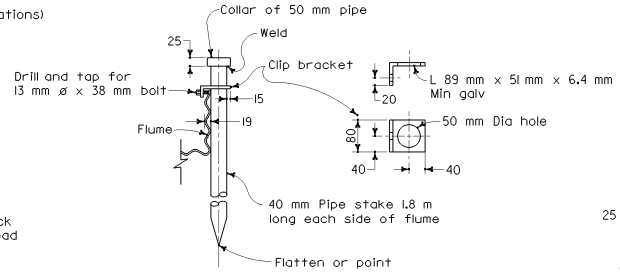

PIPE STAKE ANCHOR DETAIL

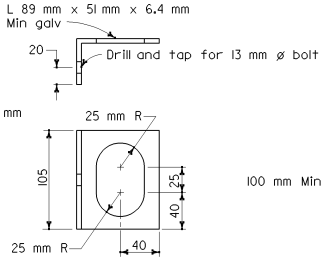

ALTERNATIVE CLIP BRACKET DETAIL

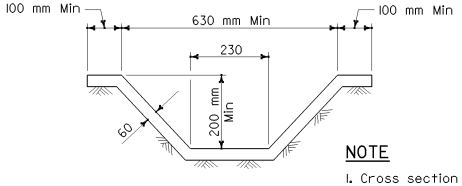

SECTION C-C
See Note 1

NOTE

1. Cross section of slope ditch may be semicircular, vee or trapezoidal.

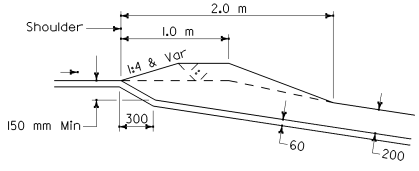

SECTION G-G

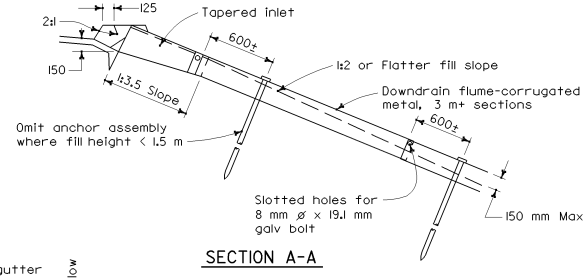

SECTION A-A

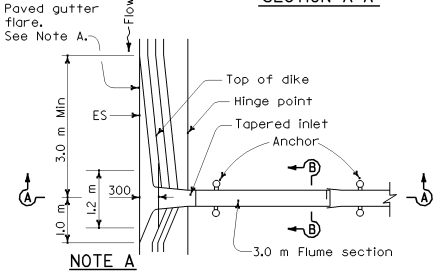

NOTE A
In sag location, use 3.0 m length of paved gutter flare on both sides of inlet.

PLAN

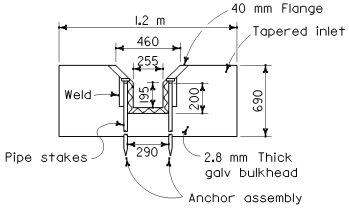

SECTION B-B

TAPERED INLET AND FLUME DOWNDRAIN

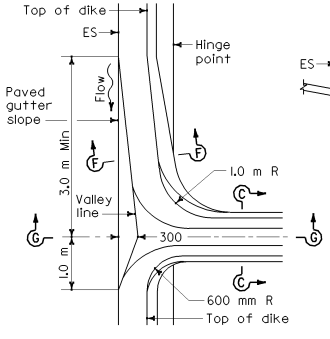

PLAN

MOUNTABLE DIKE

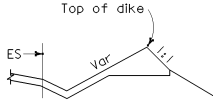

SECTION F-F

ASPHALT CONCRETE OVERSIDE DRAINS

STATE OF CALIFORNIA
DEPARTMENT OF TRANSPORTATION

OVERSIDE DRAINS

NO SCALE

ALL DIMENSIONS ARE IN MILLIMETERS UNLESS OTHERWISE SHOWN

D87D

05-04-04

Back to Table of Contents

DIST	COUNTY	ROUTE	KILOMETER POST TOTAL PROJECT	SHEET NO.	TOTAL SHEETS

Caltrans Metric

REGISTERED CIVIL ENGINEER

July 1, 2004
PLANS APPROVAL DATE

REGISTERED PROFESSIONAL ENGINEER Dallas Forester No. C37765 Exp. 12-31-04 CIVIL STATE OF CALIFORNIA

The State of California or its officers or agents shall not be responsible for the accuracy or completeness of electronic copies of this plan sheet.

To get to the Caltrans web site, go to: http://www.dot.ca.gov

TABLE OF MINIMUM COVER AND STRUTTING REQUIREMENTS FOR CONSTRUCTION LOADS

TYPE					80-222 kN AXLE		222-334 kN AXLE		334-489 kN AXLE		489-667 kN AXLE	
	MAXIMUM DESIGN FILL	SPAN	CELLS	MIN COVER	STRUTS REQUIRED	STRUT SIZE AND SPACING	STRUTS REQUIRED	STRUT SIZE AND SPACING	STRUTS REQUIRED	STRUT SIZE AND SPACING	STRUTS REQUIRED	STRUT SIZE AND SPACING
BOX CULVERTS	3.0 m and 6.0 m	1.2 m to 2.4 m	Single and Multiple	1.5 m	———	———	———	———	———	———	———	———
	3.0 m	3.0 m to 4.3 m	Single and Multiple	1.5 m	———	———	1/3 Points	Struts 140x140 mm @ 1.0 m Sills 140x184 mm	1/3 Points	Struts 140x184 mm @ 1.0 m Sills 140x184 mm	1/3 Points	Struts 140x184 mm @ 1.0 m Sills 140x184 mm
	6.0 m	3.0 m to 4.3 m	Single and Multiple	1.5 m	———	———	———	———	———	———	———	———

TABLE OF MINIMUM COVER FOR CONSTRUCTION LOADS

TYPE		DIA OR SPAN	80-222kN AXLE	222-334 kN AXLE	334-489 kN AXLE	489-667 kN AXLE
REINFORCED CONCRETE CULVERTS	Pipes	Dia 300 mm to 1000 mm	600 mm	900 mm	900 mm	900 mm
		Dia 1050 mm to 2700 mm	$\frac{Dia}{1.75}$ or 900 mm	$\frac{Dia}{1.75}$ or 900 mm	$\frac{Dia}{1.75}$ or 900 mm	$\frac{Dia}{1.75}$ or 900 mm
	Arches	Spans to 4.3 m	$\frac{Span}{2.5}$ or 1.2 m	$\frac{Span}{2.5}$ or 1.2 m	$\frac{Span}{2.5}$ or 1.2 m	$\frac{Span}{2.5}$ or 1.2 m
		Spans 4.6 m to 6.7 m	$\frac{Span}{3.5}$ or 1.8 m	$\frac{Span}{3.5}$ or 1.8 m	$\frac{Span}{3.5}$ or 1.8 m	$\frac{Span}{3.5}$ or 1.8 m
METAL CULVERTS	Pipes	Dia to 3000 mm	$\frac{Dia}{1.75}$ or 1.2 m	$\frac{Dia}{1.75}$ or 1.2 m	$\frac{Dia}{1.75}$ or 1.2 m	$\frac{Dia}{1.75}$ or 1.2 m
		Dia over 3000 mm	$\frac{Dia}{3}$ or 1.8 m	$\frac{Dia}{3}$ or 1.8 m	$\frac{Dia}{3}$ or 1.8 m	$\frac{Dia}{3}$ or 1.8 m
	Pipe Arches	All Spans	$\frac{Span}{3}$ or 1.2 m	$\frac{Span}{3}$ or 1.2 m	$\frac{Span}{3}$ or 1.2 m	$\frac{Span}{3}$ or 1.2 m
	Structural Plate Pipe, Arches and Vehicular Undercrossings	All Spans	$\frac{Span}{3}$ or 1.5 m	$\frac{Span}{3}$ or 1.5 m	$\frac{Span}{3}$ or 1.5 m	$\frac{Span}{3}$ or 1.5 m
Plastic Pipe		Dia 300 mm to 1200 mm	$\frac{Dia}{1.75}$ or 1.2 m	$\frac{Dia}{1.75}$ or 1.2 m	$\frac{Dia}{1.75}$ or 1.2 m	$\frac{Dia}{1.75}$ or 1.2 m

NOTE Minimum cover shall be the greater value of alternatives shown. The diameter and spans shown in the table to calculate the minimum cover (Example: $\frac{Dia}{1.75}$) are the diameter or span of the facility expressed in number of meters.

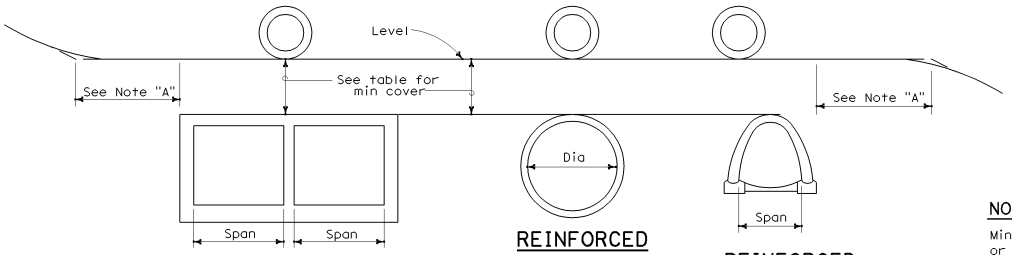

BOX CULVERTS

REINFORCED CONCRETE PIPES, PLASTIC PIPES AND METAL CULVERTS

REINFORCED CONCRETE ARCH CULVERTS

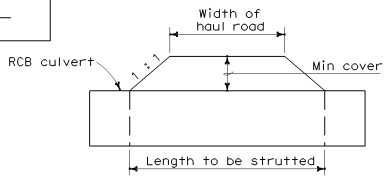

MINIMUM LENGTH OF STRUTTING

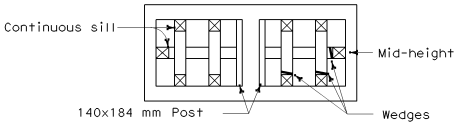

RCB STRUTTING DETAILS

NOTES

Length of strutting to be determined by the Engineer, but shall not be less than as shown in the sketch above.

Assumed tire patterns:

222 kN axle	610x460 mm
334 kN axle	910x610 mm
489 kN axle	910x760 mm
667 kN axle	910x910 mm

Impact = 10%

Sills to be glue-laminated or solid timber.

For strutting requirements of Structural Steel Plate Vehicular Undercrossing, Structural Steel Plate Arches and Structural Steel Plate Pipes during construction, see Standard Plans D88A.

NOTE "A"

Minimum distance equals 3 times the span or 3 times the diameter.

STATE OF CALIFORNIA
DEPARTMENT OF TRANSPORTATION

CONSTRUCTION LOADS ON CULVERTS

NO SCALE

ALL DIMENSIONS ARE IN MILLIMETERS UNLESS OTHERWISE SHOWN

D88

04-01-04

2004 Std PLAN D88

Back to Table of Contents

DIST	COUNTY	ROUTE	KILOMETER POST TOTAL PROJECT	SHEET NO.	TOTAL SHEETS

Caltrans Metric

REGISTERED CIVIL ENGINEER

July 1, 2004
PLANS APPROVAL DATE

REGISTERED PROFESSIONAL ENGINEER
Dallas Forester
No. C37765
Exp. 12-31-04
CIVIL
STATE OF CALIFORNIA

The State of California or its officers or agents shall not be responsible for the accuracy or completeness of electronic copies of this plan sheet.

To get to the Caltrans web site, go to: http://www.dot.ca.gov

2004 Std PLAN D88A

TABLE B

TIMBER STRUTS FOR STRUCTURAL STEEL PLATE VEHICULAR UNDERCROSSING		
SPAN (mm)	STRUT SIZE (mm)	SILL SIZE (mm)
4013 - 4724	89x89	89x140
4800 -5258	89x89	89x184
Over 5258	140x140	140x184

Tabular data in Table B based on 152x51 mm corrugations, (Structural steel plate)

TABLE A

TIMBER STRUTS FOR STRUCTURAL STEEL PLATE PIPE			
PIPE DIA (mm)	STRUT SIZE (mm)	HEIGHT OF FILL	
		0 to 6.1 m	GREATER THAN 6.1 m
6100 Thru 6400	184x184	1.5 m SPACING	1.0 m SPACING
	235x235	2.5 m SPACING	1.4 m SPACING

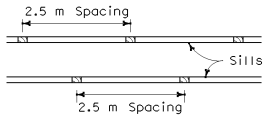

SECTION B-B

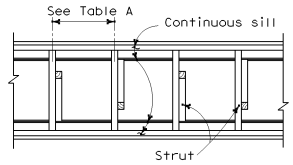

SECTION A-A

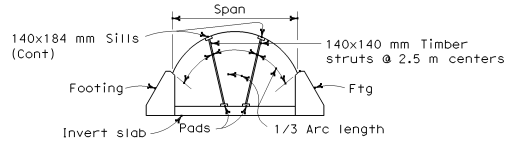

TYPICAL SECTION

STRUCTURAL STEEL PLATE ARCHES

Struts required when span of structural steel plate arch exceeds 5.5 m. Pad size as directed by Engineer.

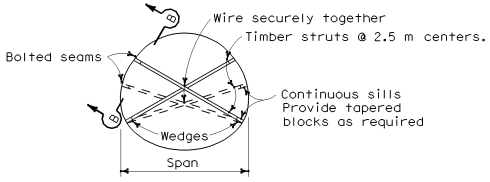

TYPICAL SECTION

STRUCTURAL STEEL PLATE VEHICULAR UNDERCROSSING

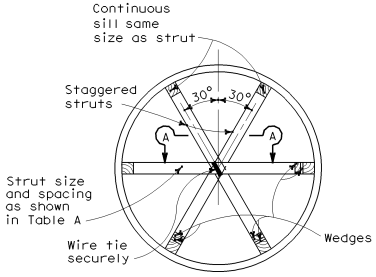

TYPICAL SECTION

STRUCTURAL STEEL PLATE PIPES

NOTES

1. Struts shown are minimum required during construction and are for earth loads only.
2. Backfill shall be brought up uniformly on both sides of the structure.
3. For minimum cover over structure for construction loads, see Standard Plan D88.

STATE OF CALIFORNIA
DEPARTMENT OF TRANSPORTATION

STRUT DETAILS FOR STRUCTURAL STEEL PIPES, ARCHES AND VEHICULAR UNDERCROSSING

NO SCALE

ALL DIMENSIONS ARE IN MILLIMETERS UNLESS OTHERWISE SHOWN

D88A

04-01-04

Back to Table of Contents

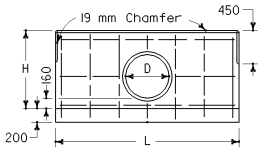

FRONT ELEVATION
SINGLE HEADWALL

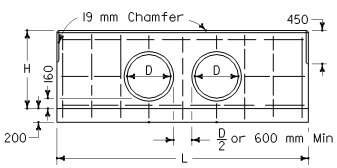

FRONT ELEVATION
DOUBLE HEADWALL

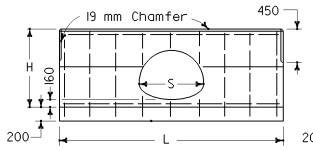

FRONT ELEVATION
SINGLE HEADWALL

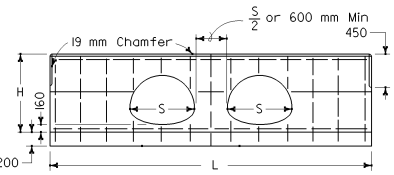

FRONT ELEVATION
DOUBLE HEADWALL

Caltrans Metric

DIST	COUNTY	ROUTE	KILOMETER POST TOTAL PROJECT	SHEET NO.	TOTAL SHEETS

REGISTERED CIVIL ENGINEER

July 1, 2004
PLANS APPROVAL DATE

REGISTERED PROFESSIONAL ENGINEER Glenn DeCou No. C34547 Exp. 9-30-05 CIVIL STATE OF CALIFORNIA

The State of California or its officers or agents shall not be responsible for the accuracy or completeness of electronic copies of this plan sheet.

To get to the Caltrans web site, go to: http://www.dot.ca.gov

D	H	SINGLE			DOUBLE		
		L	Steel	Conc	L	Steel	Conc
mm	mm	mm	kg	m^3	mm	kg	m^3
300	810	1500	16	0.45	2500	24	0.74
375	885	1800	18	0.56	2950	28	0.91
450	960	2100	22	0.68	3250	34	1.04
525	1035	2250	26	0.76	3550	40	1.18
600	1110	2550	34	0.90	3850	46	1.32
675	1185	2850	38	1.04	4300	52	1.53
750	1260	3000	40	1.13	4600	54	1.69
825	1335	3300	44	1.29	4900	58	1.86
900	1410	3600	46	1.46	5200	66	2.03
975	1485	3750	58	1.57	5500	78	2.21
1050	1560	4050	62	1.75	5800	84	2.39
1125	1635	4350	66	1.94	6100	88	2.58
1200	1710	4500	70	2.06	6400	90	2.78
1275	1785	4800	80	2.26	6850	102	3.06
1350	1860	5100	84	2.47	7150	108	3.27

STRAIGHT HEADWALLS

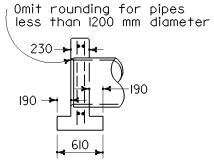

SECTION, SINGLE & DOUBLE HEADWALLS

CMP ARCH SIZE	SINGLE				DOUBLE		
	H	L	Steel	Conc	L	Steel	Conc
mm	mm	mm	kg	m^3	mm	kg	m^3
530x380	885	2000	20	0.61	3000	28	0.91
610x460	960	2300	22	0.74	3500	32	1.10
710x510	1010	2600	28	0.85	4100	40	1.32
885x610	1110	3200	38	1.11	4700	54	1.58
1060x740	1235	3800	50	1.40	5500	66	1.95
1240x840	1335	4400	58	1.70	6400	78	2.37
1440x970	1460	5200	70	2.13	7450	96	2.91
1620x1100	1585	5800	80	2.50	8200	104	3.36
1800x1200	1685	6400	88	2.89	9100	116	3.88

STRAIGHT HEADWALLS

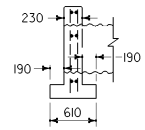

SECTION, SINGLE & DOUBLE HEADWALLS

NOTES

1. No deduction made in quantities for thickness of pipe walls.
2. All reinforcing steel #13 bars. All vertical and horizontal tie bars 450 mm maximum spacing.
3. Length of wall "W" may be varied to suit conditions encountered in the field, and straight line interpolation may be used to calculate quantities.
4. Quantities are for design purposes only.
5. Cable railing to be installed on top of headwall when shown on Project Plans. See Standard Plan B11-47 for cable railing details.

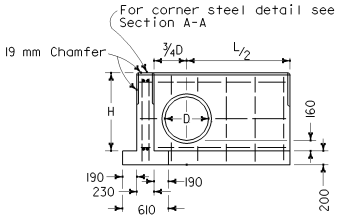

FRONT ELEVATION "L" HEADWALL

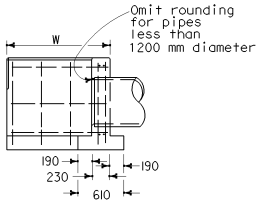

SECTION "L" HEADWALL

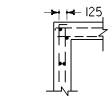

SECTION A-A

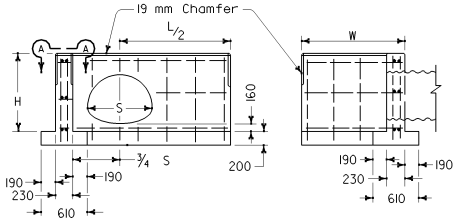

FRONT ELEVATION
"L" HEADWALL

SECTION "L"
HEADWALL

D	H	L/2	LENGTH OF W									
			1000		1450		1900		2350		2800	
			Steel	Conc	Steel	Conc	Steel	Conc	Steel	Conc	Steel	Conc
mm	mm	mm	kg	m^3	kg	m^3	kg	m^3	kg	m^3	kg	m^3
300	810	750	22	0.59	26	0.73	—	—	—	—	—	—
375	885	900	24	0.68	28	0.83	—	—	—	—	—	—
450	960	1050	28	0.78	32	0.94	—	—	—	—	—	—
525	1035	1125	32	0.86	40	1.02	—	—	—	—	—	—
600	1110	1275	38	0.96	44	1.13	48	1.30	—	—	—	—
675	1185	1425	40	1.07	46	1.25	50	1.43	—	—	—	—
750	1260	1500	42	1.16	48	1.34	52	1.53	60	1.72	—	—
825	1335	1650	46	1.28	52	1.47	60	1.67	66	1.86	—	—
900	1410	1800	48	1.40	54	1.61	62	1.81	68	2.01	74	2.21
975	1485	1875	—	—	66	1.71	74	1.92	80	2.13	88	2.33
1050	1560	2025	—	—	68	1.85	76	2.07	84	2.28	92	2.50
1125	1635	2175	—	—	—	—	78	2.22	88	2.45	94	2.67
1200	1710	2250	—	—	—	—	84	2.34	94	2.57	100	2.81
1275	1785	2400	—	—	—	—	—	—	96	2.75	102	2.98
1350	1860	2550	—	—	—	—	—	—	102	2.92	110	3.17

"L" HEADWALLS

CIRCULAR PIPE CULVERT HEADWALLS

CMP ARCH SIZE	H	LENGTH OF W										
		L/2	1000		1450		1900		2350		2800	
			Steel	Conc	Steel	Conc	Steel	Conc	Steel	Conc	Steel	Conc
mm	mm	mm	kg	m^3	kg	m^3	kg	m^3	kg	m^3	kg	m^3
530x380	885	1000	26	0.74	30	0.89	34	1.04	40	1.18	44	1.33
610x460	960	1150	28	0.84	32	1.00	36	1.15	42	1.30	50	1.46
710x510	1010	1300	32	0.93	36	1.09	40	1.25	44	1.41	52	1.57
885x610	1110	1600	44	1.13	50	1.30	54	1.47	62	1.64	70	1.81
1060x740	1235	1900	52	1.36	58	1.54	62	1.72	70	1.90	76	2.09
1240x840	1335	2200	58	1.58	64	1.77	70	1.96	76	2.16	82	2.35
1440x970	1460	2600	64	1.89	72	2.09	78	2.30	84	2.51	92	2.71
1620x1100	1585	2900	84	2.16	90	2.38	96	2.60	104	2.82	112	3.04
1800x1200	1685	3200	90	2.44	96	2.66	104	2.89	112	3.12	120	3.35

"L" HEADWALLS

CORRUGATED METAL PIPE ARCH CULVERT HEADWALLS

STATE OF CALIFORNIA
DEPARTMENT OF TRANSPORTATION

PIPE HEADWALLS

NO SCALE

ALL DIMENSIONS ARE IN MILLIMETERS UNLESS OTHERWISE SHOWN

D89

2004 Std PLAN D89

04-23-04

Back to Table of Contents

Caltrans Metric

DIST	COUNTY	ROUTE	KILOMETER POST TOTAL PROJECT	SHEET NO.	TOTAL SHEETS

REGISTERED CIVIL ENGINEER

July 1, 2004
PLANS APPROVAL DATE

REGISTERED PROFESSIONAL ENGINEER Dallas Forester No. C37765 Exp. 12-31-04 CIVIL STATE OF CALIFORNIA

The State of California or its officers or agents shall not be responsible for the accuracy or completeness of electronic copies of this plan sheet.

To get to the Caltrans web site, go to: http://www.dot.ca.gov

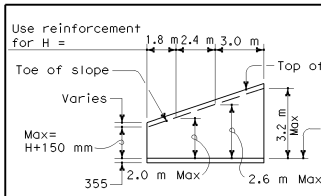

INLET OUTLET

RC PIPE DETAILS

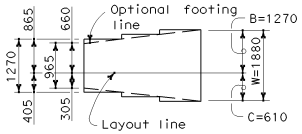

TYPICAL LAYOUT EXAMPLE

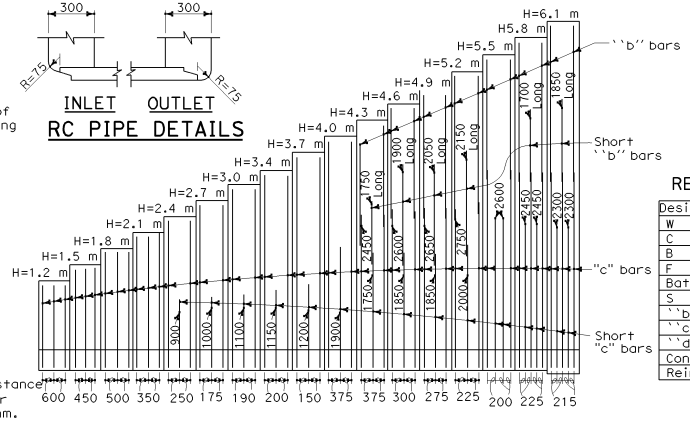

Number above ``b'' and ``c'' bars indicates distance from top of footing to upper end of bars. Bar cutoffs may be varied in increments of 150 mm.

REINFORCED CONCRETE WINGWALLS

Design ``H''	1.2 m	1.5 m	1.8 m	2.1 m	2.4 m	2.7 m	3.0 m	3.4 m	3.7 m	4.0 m	4.3 m	4.6 m	4.9 m	5.2 m	5.5 m	5.8 m	6.1 m
W (mm)	965	1120	1270	1420	1575	1730	1880	2030	2185	2335	2440	2640	2845	3050	3250	3455	3660
C (mm)	305	355	405	455	510	560	610	660	710	760	815	915	1015	1120	1220	1320	1425
B (mm)	660	765	865	965	1065	1170	1270	1370	1475	1575	1625	1725	1830	1930	2030	2135	2235
F (mm)	355																405
Batter	None									4:100							
S (mm)	305									470	480	490	500	520	530	550	560
``b'' bars	None									#16@375	#16@300	#16@275	#16@225	#19@600	#19@450	#22@430	
``c'' bars	#13@600	#13@450	#16@500	#16@350	#16@250	#16@175	#19@190	#22@200	#22@150	#29@375	#32@375	#32@300	#32@275	#32@225	#32@200	#36@225	#36@215
``d'' bars	#13@600	#13@450	#16@500	#16@350	#16@250	#19@350	#22@380	#25@400	#22@300	#25@375	#29@375	#29@300	#29@275	#29@225	#29@200	#32@225	#32@215
Conc m^3/m	0.80	0.95	1.10	1.23	1.38	1.53	1.68	1.83	1.98	2.56	2.76	2.96	3.16	3.41	3.64	3.89	4.31
Reinf kg/m	19	24	28	37	45	55	73	92	113	109	134	155	183	210	253	281	307

NOTES

Unit Stresses: f_s = 165 MPa, f_c = 9 MPa, n = 10
Maximum Toe Pressure = 144 kPa.
Elevation, length and angle of flare of wings may be varied by the Engineer to suit conditions encountered in the field. Walls designed for 600 mm live load surcharge, 1 : 1.5 sloping surcharge not to exceed 1.5 m in elevation plus 600 mm live load surcharge, or unlimited 1:2 surcharge. If 1 : 1.5 slope exceeds 1.5 m, use Type 2 retaining wall. Wall height may be exceeded by 150 mm before going to the next greater ``H''.

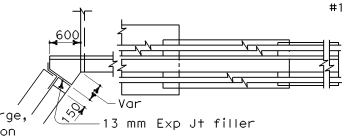

PART PLAN A-A

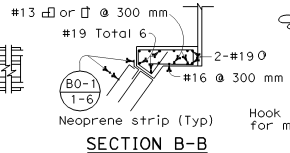

SECTION B-B

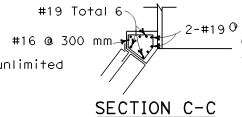

SECTION C-C

If required, slope protection details are shown elsewhere in the road plans, or as directed by the Engineer.

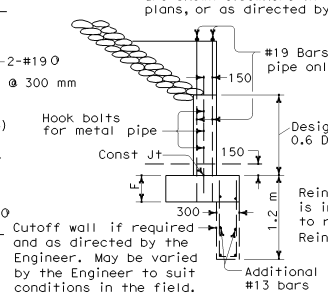

SECTION F-F

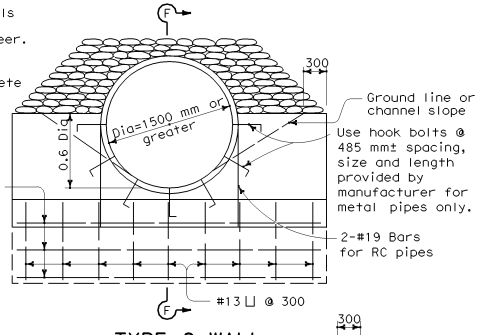

TYPE C WALL

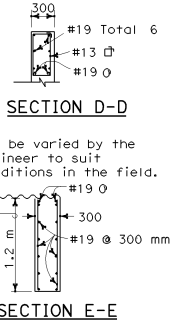

SECTION D-D

SECTION E-E

May be varied by the Engineer to suit conditions in the field.

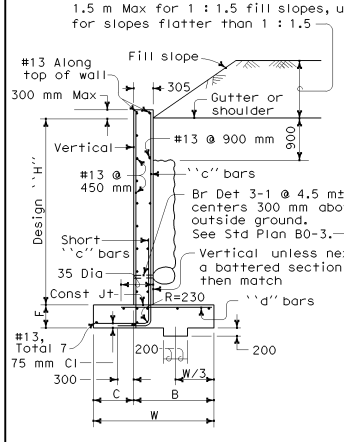

TYPICAL SECTION H=1.2 m THRU 3.7 m

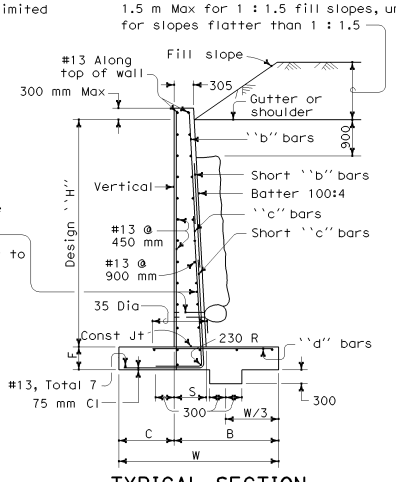

TYPICAL SECTION H=4.0 m THRU 6.1 m

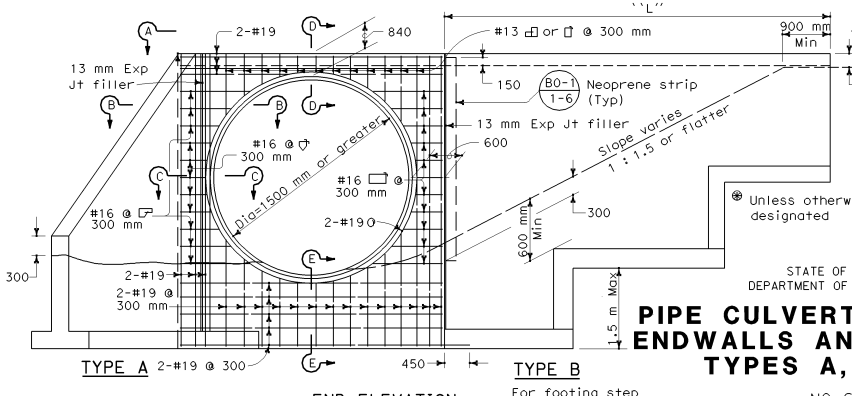

END ELEVATION STRAIGHT WINGWALLS

For footing step dimensions and reinforcement see ``Footing Step'' on Std Plan B3-8.

STATE OF CALIFORNIA
DEPARTMENT OF TRANSPORTATION

PIPE CULVERT HEADWALLS, ENDWALLS AND WINGWALLS TYPES A, B AND C

NO SCALE

ALL DIMENSIONS ARE IN MILLIMETERS UNLESS OTHERWISE SHOWN

D90

04-01-04

Back to Table of Contents

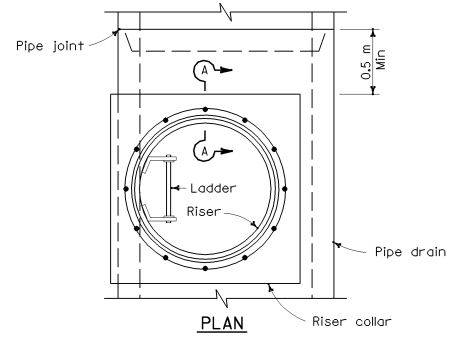

PLAN

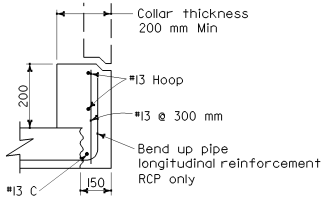

SECTION A-A

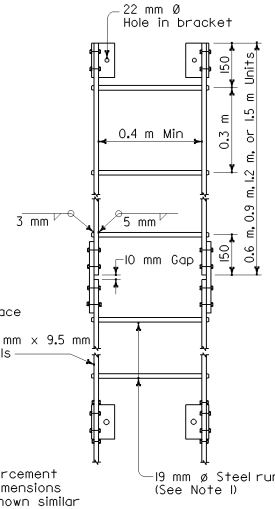

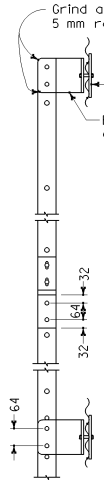

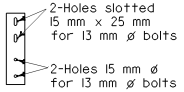

LADDER
SPLICE PLATE
64 mm x 9.5 mm x 0.25 m
See Note 4

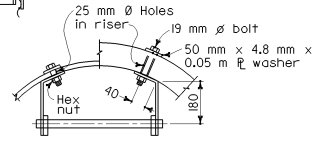

LADDER CONNECTION TO RISER

LADDER DETAILS
See Notes 2,3 and 7

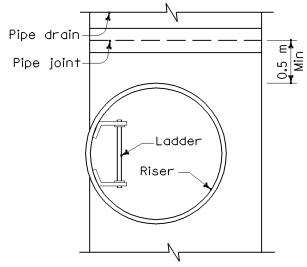

PLAN

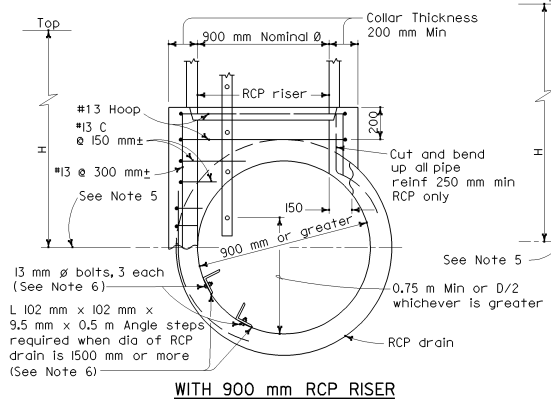

WITH 900 mm RCP RISER

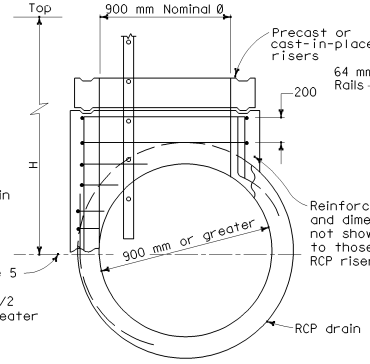

WITH 900 mm PRECAST RISERS

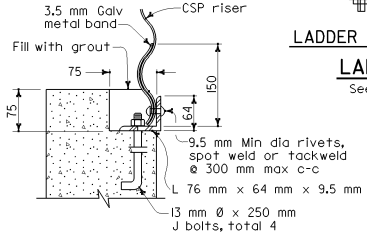

DETAIL A

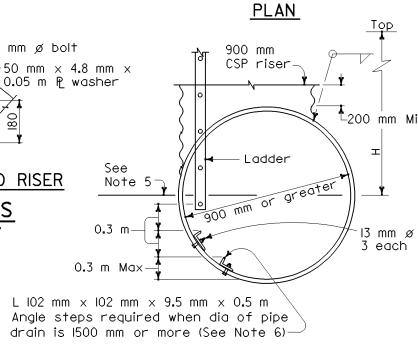

WITH 900 mm CSP RISER

CORRUGATED STEEL PIPE OR
STRUCTURAL PLATE PIPE DRAIN

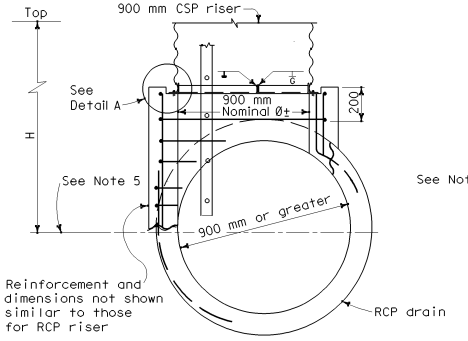

WITH 900 mm CSP RISER

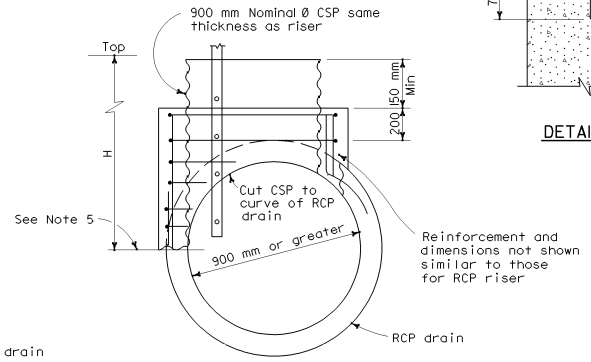

WITH 900 mm CSP RISER
ALTERNATIVE COLLAR DETAIL

REINFORCED CONCRETE PIPE DRAIN

NOTES

1. Galvanizing: See Standard Specifications or Special Provisions. All hardware to be galvanized after fabrication.
2. Ladder may be constructed in one length at contractor's option on reinforced concrete pipe risers.
3. On corrugated steel pipe riser, connect ladder splice plate so joint can compress 10 mm.
4. Ladder splice plate to be connected with 13 mm Ø bolts with double nuts.
5. Pay limit for 900 mm risers to centerline of cross pipe.
6. Where angle steps are required, the lowest angle shall not be more than 0.3 m above the flowline of the drain. The distance between angle steps and between the uppermost angle step and the lowest rung of the ladder shall not exceed 0.3 m. Power driven fasteners, equivalent to the 13 mm Ø bolts shown, may be used for fixing the angle steps to the wall of the reinforced concrete pipe drain.
7. Install ladder so that the highest rung is not more than 0.3 m below the top of the riser.

Caltrans Metric

DIST	COUNTY	ROUTE	KILOMETER POST TOTAL PROJECT	SHEET NO.	TOTAL SHEETS

REGISTERED CIVIL ENGINEER
July 1, 2004
PLANS APPROVAL DATE

REGISTERED PROFESSIONAL ENGINEER Glenn DeCou No. C34547 Exp. 9-30-05 CIVIL STATE OF CALIFORNIA

The State of California or its officers or agents shall not be responsible for the accuracy or completeness of electronic copies of this plan sheet.

To get to the Caltrans web site, go to: http://www.dot.ca.gov

STATE OF CALIFORNIA
DEPARTMENT OF TRANSPORTATION

PIPE RISER CONNECTIONS

NO SCALE

ALL DIMENSIONS ARE IN
MILLIMETERS UNLESS OTHERWISE SHOWN

D93A

03-26-04

Back to Table of Contents

DIST	COUNTY	ROUTE	KILOMETER POST TOTAL PROJECT	SHEET NO.	TOTAL SHEETS

Caltrans Metric

REGISTERED CIVIL ENGINEER

July 1, 2004
PLANS APPROVAL DATE

REGISTERED PROFESSIONAL ENGINEER
Glenn DeCou
No. C34547
Exp. 9-30-05
CIVIL
STATE OF CALIFORNIA

The State of California or its officers or agents shall not be responsible for the accuracy or completeness of electronic copies of this plan sheet.

To get to the Caltrans web site, go to: http://www.dot.ca.gov

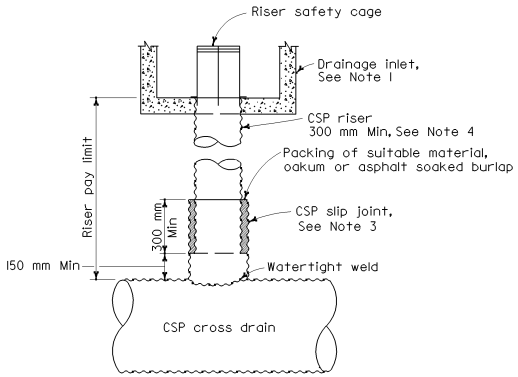

CSP RISER FOR DRAINAGE INLET

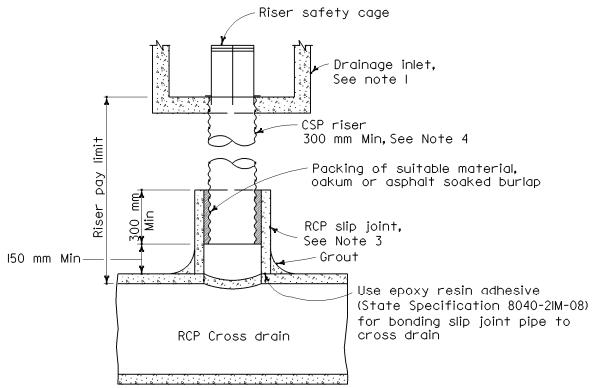

CSP RISER FOR DRAINAGE INLET

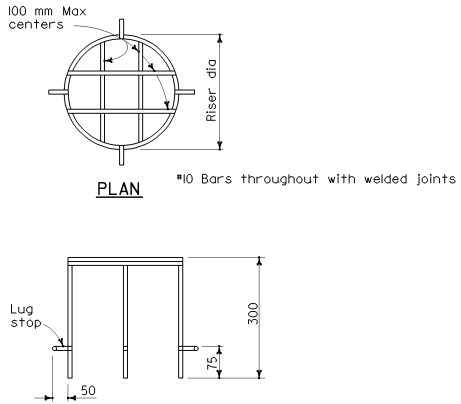

RISER SAFETY CAGE DETAIL

NOTES

1. Structure at top of riser may be any standard drainage inlet or pipe inlet.
2. Galvanizing: See Standard Specifications or Special Provision.
3. Diameter of slip joint to be 75 mm greater than diameter of riser.
4. Plastic pipe riser may be substituted for CSP riser shown. Slip joint diameter to be as necessary to accommodate plastic pipe outside diameter.
5. For plastic pipe cross drain, use fabricated reducing tee of same material as cross drain as appropriate to provide watertight connection.

STATE OF CALIFORNIA
DEPARTMENT OF TRANSPORTATION

DRAINAGE INLET RISER CONNECTIONS

NO SCALE

ALL DIMENSIONS ARE IN MILLIMETERS UNLESS OTHERWISE SHOWN

D93B

2004 Std PLAN D93B

05-12-04

Back to Table of Contents

DIST	COUNTY	ROUTE	KILOMETER POST TOTAL PROJECT	SHEET NO.	TOTAL SHEETS

Caltrans Metric

REGISTERED CIVIL ENGINEER

July 1, 2004
PLANS APPROVAL DATE

REGISTERED PROFESSIONAL ENGINEER Glenn DeCou No. C34547 Exp. 9-30-05 CIVIL STATE OF CALIFORNIA

The State of California or its officers or agents shall not be responsible for the accuracy or completeness of electronic copies of this plan sheet.

To get to the Caltrans web site, go to: http://www.dot.ca.gov

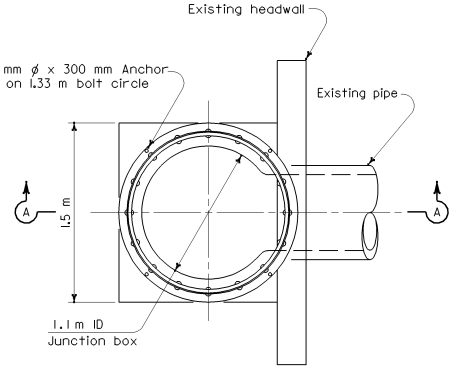

PLAN

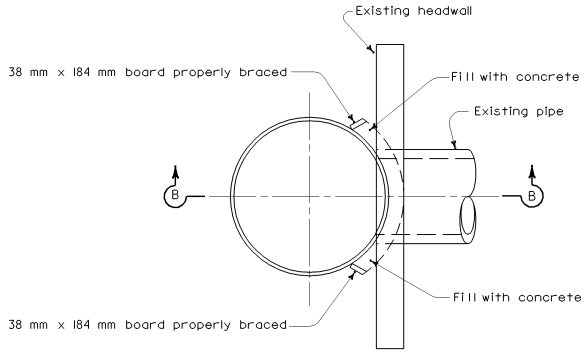

PLAN

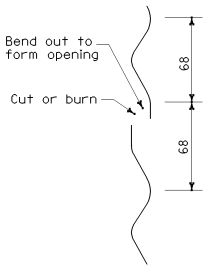

DETAIL A

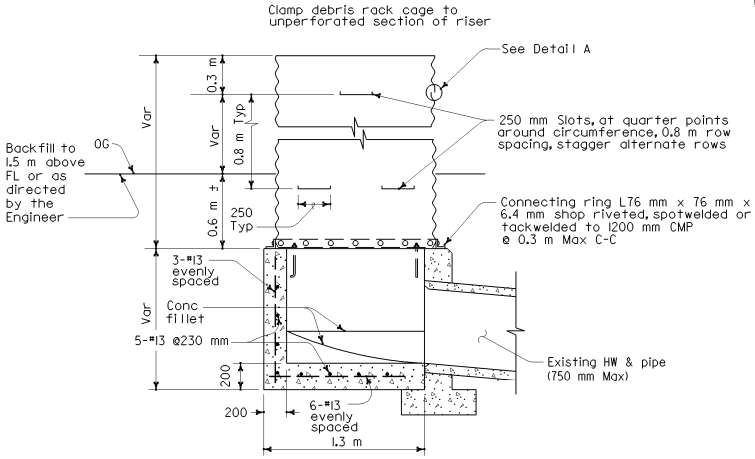

SECTION A-A

CMP RISER

AND JUNCTION BOX

TYPE A

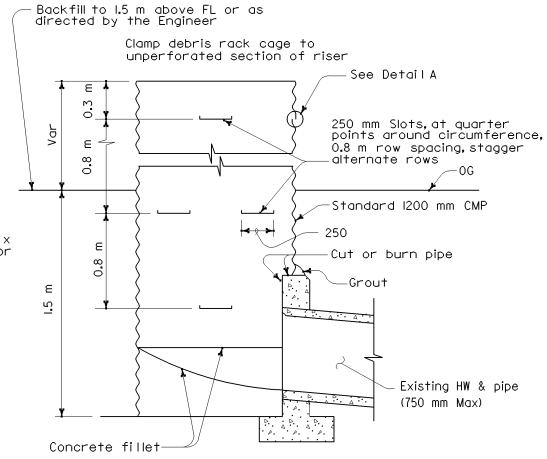

SECTION B-B

CMP RISER

TYPE B

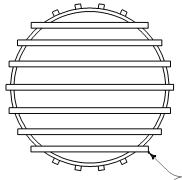

TOP VIEW

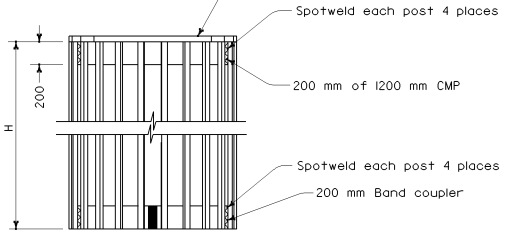

FRONT VIEW

H = 22 Posts- 1.8 m or 2.4 m lengths use 50 mm pipe or ⌊51mm x 51mm x 4.8 mm (Galvanized steel or aluminum)

DEBRIS RACK CAGE

STATE OF CALIFORNIA
DEPARTMENT OF TRANSPORTATION

PIPE RISER WITH DEBRIS RACK CAGE

NO SCALE

ALL DIMENSIONS ARE IN MILLIMETERS UNLESS OTHERWISE SHOWN

D93C

03-26-04

Back to Table of Contents

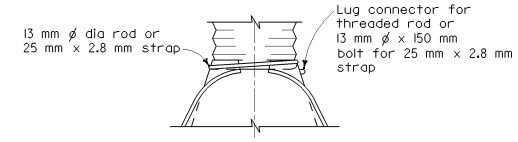

TYPE I

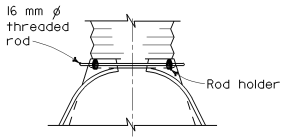

TYPE II

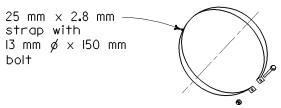

CONNECTOR STRAP DETAIL

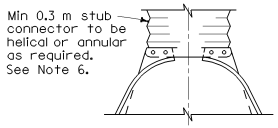

TYPE III

ALTERNATIVE CONNECTIONS FOR PIPE TO METAL FLARED END SECTIONS

See Note 7

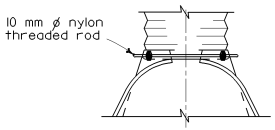

TYPE A

300 mm - 600 mm

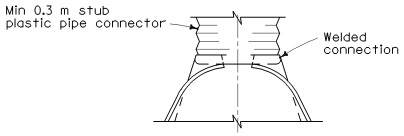

TYPE B

750 mm - 900 mm

ALTERNATIVE CONNECTIONS FOR PIPE TO PLASTIC FLARED END SECTIONS

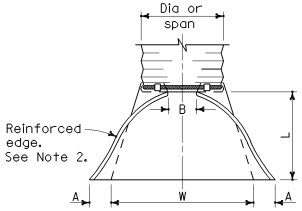

PLAN

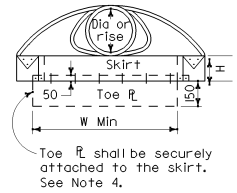

ELEVATION

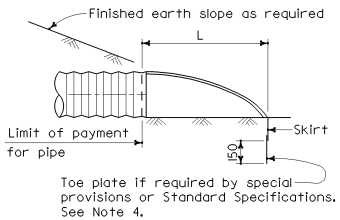

TYPICAL CROSS-SECTION

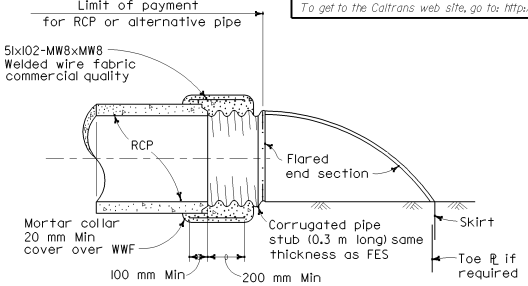

FLARED END SECTION CONNECTION TO RCP

CIRCULAR PIPES						
PIPE DIA (mm)	END SECTION THICKNESS (mm)	DIMENSION-MILLIMETERS				
		A	B	H	L	W
		25 mm±	Max	25 mm±	40 mm±	50 mm±
300*	1.6	150	150	150	530	610
375*	1.6	180	200	150	660	760
450*	1.6	200	250	150	790	910
525	1.6	230	300	150	910	1070
600*	1.6	250	330	150	1040	1220
750*	2.0	300	410	200	1300	1520
900*	2.0	360	480	230	1520	1830
1050	2.8	410	560	280	1750	2130
1200	2.8	460	690	300	1980	2290
1350	2.8	460	760	300	2130	2590
1500	2.8	460	840	300	2210	2900
1650	2.8	460	910	300	2210	3050
1800	2.8	460	990	300	2210	3200
1950	2.8	460	1070	300	2210	3350
2100	2.8	460	1140	300	2210	3510

*Equivalent plastic FES to meet AASHTO M-294 and ASTM D-1248 Specifications, and shall conform to all dimensions shown above except for end section thickness, which may be 0.1 mm thinner.

PIPE-ARCHES								
DESIGNATION (mm)		END SECTION THICKNESS (mm)	DIMENSION-MILLIMETERS					
			A	B	H	L	W	
SPAN	RISE		25 mm±	Max	25 mm±	40 mm±	50 mm±	
525	375	1.6	180	250	150	580	910	
600	450	1.6	200	300	150	710	1070	
700	500	1.6	230	360	150	810	1220	
875	600	2.0	250	410	150	990	1520	
1050	725	2.0	300	460	200	1170	1910	
1225	825	2.8	330	530	230	1350	2160	
1425	950	2.8	460	660	300	1600	2290	
1600	1075	2.8	460	760	300	1780	2590	
1775	1175	2.8	460	840	300	1960	2900	
1925	1300	2.8	460	910	300	1960	3200	
2075	1425	2.8	460	990	300	1960	3510	

FLARED END SECTIONS FOR CORRUGATED METAL AND PLASTIC PIPE CULVERTS

Caltrans Metric

DIST	COUNTY	ROUTE	KILOMETER POST TOTAL PROJECT	SHEET NO.	TOTAL SHEETS

REGISTERED CIVIL ENGINEER

July 1, 2004
PLANS APPROVAL DATE

REGISTERED PROFESSIONAL ENGINEER Glenn DeCou No. C34547 Exp. 9-30-05 CIVIL STATE OF CALIFORNIA

The State of California or its officers or agents shall not be responsible for the accuracy or completeness of electronic copies of this plan sheet.

To get to the Caltrans web site, go to: http://www.dot.ca.gov

NOTES

1. All 3-piece bodies to have 2.8 mm thick sides and 3.5 mm thick center panels. Width of center panels to be greater than 20% of the pipe periphery. Multiple panel bodies to have lap seams which are to be tightly joined by rivets or bolts.
2. Reinforced edges to be supplemented with stiffener angles for the 1500 mm thru 2100 mm round, 1925 mm x 1300 mm and 2075 mm x 1425 mm pipe-arch sizes. The angles will be 51 mm x 51 mm x 6.4 mm for the 1500 mm thru 1800 mm round, 1925 mm x 1300 mm and 2075 mm x 1425 mm pipe-arch sizes and 64 mm x 64 mm x 6.4 mm for 1950 mm and 2100 mm round. The angles to be attached by 10 mm ø nuts and bolts.
3. Angle reinforcement shall be placed under the center panel seams on the 1925 mm x 1300 mm and 2075 mm x 1425 mm pipe-arch sizes.
4. Toe plate to be available as an accessory when specified.
5. End of pipe to be finished with annular corrugations to conform flared end section so that minimal leakage results from the connection. Other designs may be used with approval of the Engineer.
6. For 300 mm thru 600 mm helical end section connection, a universal coupling band attached to the metal end section by rivets, bolts or 25 mm long shop tack welds spaced at same intervals as dimples may be used in place of the 0.3 m stub. See Standard Plan D97C.
7. The types of alternative connections for pipe to metal flared end sections shall conform to the following:

   CIRCULAR PIPES -
   300 mm thru 600 mm Type I or III
   750 mm thru 2100 mm Type II or III

   PIPE-ARCHES -
   525 mm x 375 mm thru 1425 mm x 950 mm Type II or III
   1600 mm x 1075 mm thru 2075 mm x 1425 mm Type III

STATE OF CALIFORNIA
DEPARTMENT OF TRANSPORTATION

METAL AND PLASTIC FLARED END SECTIONS

NO SCALE

ALL DIMENSIONS ARE IN MILLIMETERS UNLESS OTHERWISE SHOWN

D94A

03-26-04

Back to Table of Contents

Caltrans Metric

DIST	COUNTY	ROUTE	KILOMETER POST TOTAL PROJECT	SHEET NO.	TOTAL SHEETS

REGISTERED CIVIL ENGINEER

July 1, 2004
PLANS APPROVAL DATE

REGISTERED PROFESSIONAL ENGINEER Glenn DeCou No. C34547 Exp. 9-30-05 CIVIL STATE OF CALIFORNIA

The State of California or its officers or agents shall not be responsible for the accuracy or completeness of electronic copies of this plan sheet.

To get to the Caltrans web site, go to: http://www.dot.ca.gov

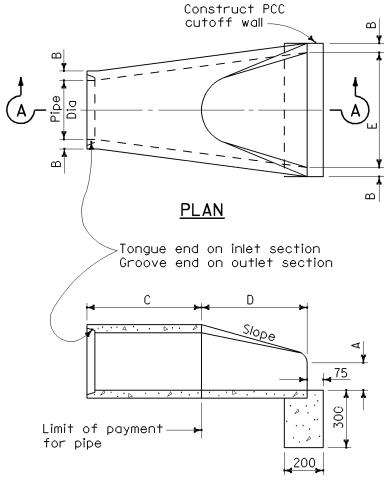

PLAN

SECTION A-A

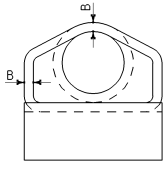

END VIEW

MINIMUM DIMENSIONS						
PIPE DIA	A	B	C	D	E	SLOPE
300	100	45	See Note 2	600	600	1:2 or flatter
450	225	58		675	910	
600	240	70		1100	1210	
750	300	83		1370	1520	
900	375	95		1600	1820	
1050	525	107		1600	1980	
1200	600	119		1820	2130	
1350	675	131		1650	2280	

PRECAST CONCRETE FLARED END SECTION TYPE A

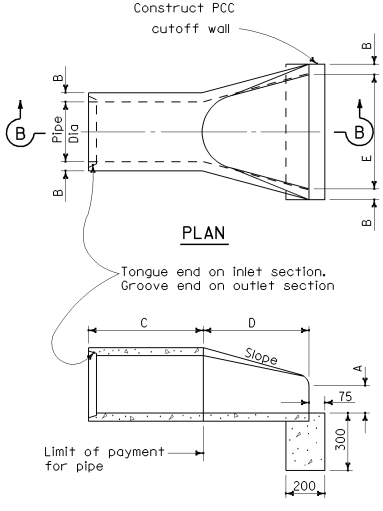

PLAN

SECTION B-B

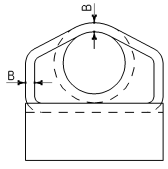

END VIEW

MINIMUM DIMENSIONS						
PIPE DIA	A	B	C	D	E	SLOPE
300	100	39	See Note 2	550	600	1:2 or flatter
450	225	45		630	910	
600	240	58		1060	1210	
750	300	71		1340	1520	
900	375	81		1570	1820	
1050	525	90		1600	1980	
1200	600	103		1820	2130	
1350	675	112		1670	2080	

PRECAST CONCRETE FLARED END SECTION TYPE B

NOTES

1. Contractor has the option of using either Type A or B precast concrete flared end section.
2. C dimension varies by manufacturer and will be paid for as concrete pipe.

STATE OF CALIFORNIA
DEPARTMENT OF TRANSPORTATION

CONCRETE FLARED END SECTIONS

NO SCALE

ALL DIMENSIONS ARE IN MILLIMETERS UNLESS OTHERWISE SHOWN

D94B

05-04-04

Back to Table of Contents

DIST	COUNTY	ROUTE	KILOMETER POST TOTAL PROJECT	SHEET NO.	TOTAL SHEETS

Caltrans Metric

REGISTERED CIVIL ENGINEER

July 1, 2004
PLANS APPROVAL DATE

REGISTERED PROFESSIONAL ENGINEER Glenn DeCou No. C34547 Exp. 9-30-05 CIVIL STATE OF CALIFORNIA

The State of California or its officers or agents shall not be responsible for the accuracy or completeness of electronic copies of this plan sheet.

To get to the Caltrans web site, go to: http://www.dot.ca.gov

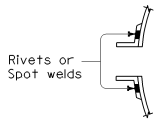

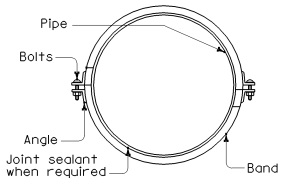

END VIEW

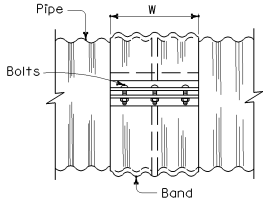

SIDE VIEW

ANNULAR BAND

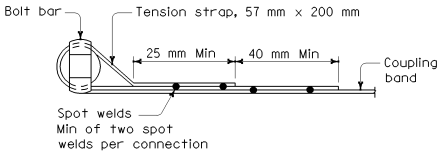

STRAP DETAIL

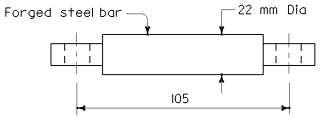

TOP VIEW

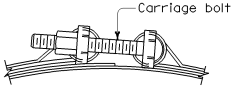

BOLT DETAIL

LEFT SIDE VIEW

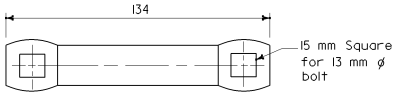

FRONT VIEW

BAR DETAIL

BAR AND STRAP CONNECTOR

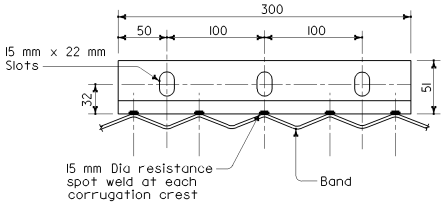

SIDE VIEW

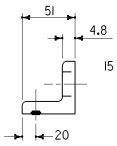

END VIEW

51 mm X 51 mm X 4.8 mm ANGLE

See tables on Standard Plans D97E, D97F and D97G for width, W=305 mm shown

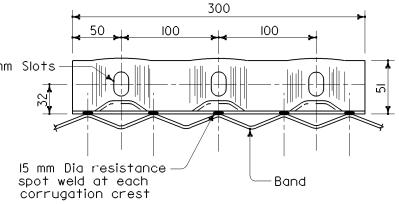

SIDE VIEW

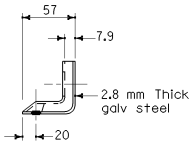

END VIEW

DIE-FORMED ANGLE

See tables on Standard Plans D97E and D97G for width, W=305 mm shown.

Alternate only for standard joints on pipes through 1800 mm diameter and downdrains through 600 mm diameter.

ANGLE CONNECTORS

NOTES

1. All ferrous metal coupling band connection hardware shall be galvanized or electroplated in accordance with the Standard Specifications.
2. Dimensions and thicknesses shown are minimum.
3. Spot welds shall develop minimum required strength of strap.
4. Fillet welds of equivalent strength may be substituted for spot welds or rivets.

STATE OF CALIFORNIA
DEPARTMENT OF TRANSPORTATION

CORRUGATED METAL PIPE COUPLING DETAILS No. 1 ANNULAR COUPLING BAND BAR AND STRAP AND ANGLE CONNECTIONS

NO SCALE

ALL DIMENSIONS ARE IN MILLIMETERS UNLESS OTHERWISE SHOWN

D97A

2004 Std PLAN D97A

03-26-04

Back to Table of Contents

DIST	COUNTY	ROUTE	KILOMETER POST TOTAL PROJECT	SHEET NO.	TOTAL SHEETS

Caltrans Metric

REGISTERED CIVIL ENGINEER

July 1, 2004
PLANS APPROVAL DATE

REGISTERED PROFESSIONAL ENGINEER Glenn DeCou No. C34547 Exp. 9-30-05 CIVIL STATE OF CALIFORNIA

The State of California or its officers or agents shall not be responsible for the accuracy or completeness of electronic copies of this plan sheet.

To get to the Caltrans web site, go to: http://www.dot.ca.gov

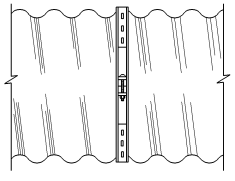

SIDE VIEW

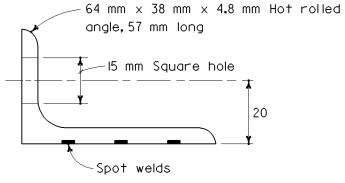

ANGLE

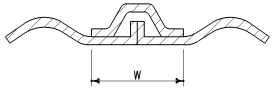

HAT BAND

NOTES

1. All ferrous metal coupling band connection hardware shall be galvanized or electroplated in accordance with the Standard Specifications.
2. Dimensions and thicknesses shown are minimum.
3. Spot welds shall develop minimum required strength of strap.
4. Fillet welds of equivalent strength may be substituted for spot welds or rivets.

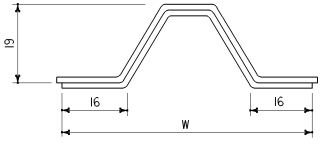

SECTIONAL VIEW

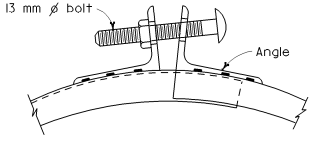

BOLT DETAIL

HAT BAND COUPLER

Angle connector shown

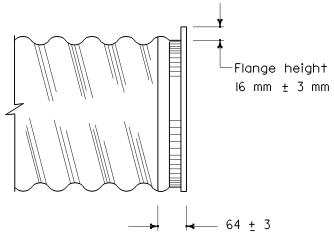

SIDE VIEW

FLANGE DETAILS

Required for Hat band coupler

STATE OF CALIFORNIA
DEPARTMENT OF TRANSPORTATION

CORRUGATED METAL PIPE COUPLING DETAILS No. 2 HAT BAND COUPLER AND FLANGE DETAILS

NO SCALE

ALL DIMENSIONS ARE IN MILLIMETERS UNLESS OTHERWISE SHOWN

D97B

03-26-04

2004 Std PLAN D97B

Back to Table of Contents

DIST	COUNTY	ROUTE	KILOMETER POST TOTAL PROJECT	SHEET NO.	TOTAL SHEETS

Caltrans Metric

REGISTERED CIVIL ENGINEER

July 1, 2004
PLANS APPROVAL DATE

REGISTERED PROFESSIONAL ENGINEER Glenn DeCou No. C34547 Exp. 9-30-05 CIVIL STATE OF CALIFORNIA

The State of California or its officers or agents shall not be responsible for the accuracy or completeness of electronic copies of this plan sheet.

To get to the Caltrans web site, go to: http://www.dot.ca.gov

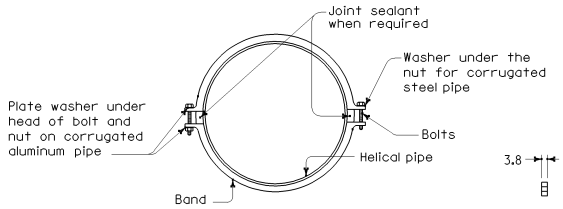

END VIEW

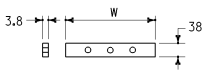

PLATE WASHER

TWO PIECE INTEGRAL FLANGE DIE FORMED BAND

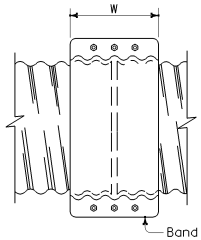

TOP VIEW

HELICAL COUPLING BANDS

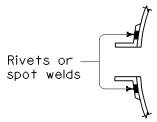

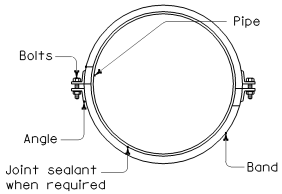

END VIEW

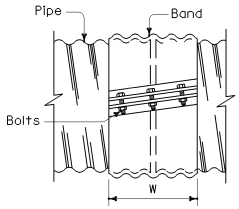

SIDE VIEW

HELICAL BAND

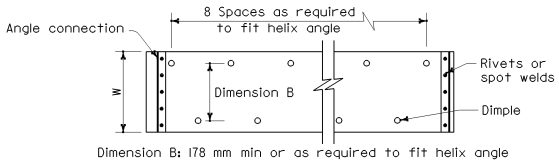

PLAN

SECTION THRU DIMPLES

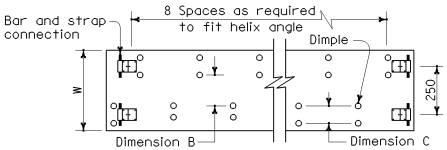

Dimension B: 178 mm min or as required to fit helix angle.
Dimension C: 68 mm min or as required to fit helix angle.
(Double dimple shown for use with 413 mm bands)

PLAN

NOTES

1. All ferrous metal coupling band connection hardware shall be galvanized or electroplated in accordance with the Standard specifications.
2. Dimensions and thicknesses shown are minimum.
3. Spot welds shall develop minimum required strength of strap.
4. Fillet welds of equivalent strength may be substituted for spot welds or rivets.

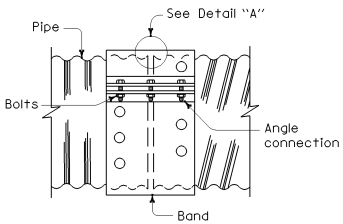

SIDE VIEW

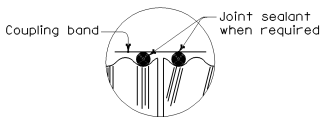

DETAIL "A"

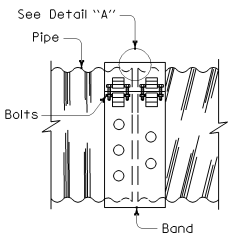

SIDE VIEW

UNIVERSAL COUPLING BANDS

STATE OF CALIFORNIA
DEPARTMENT OF TRANSPORTATION

CORRUGATED METAL PIPE COUPLING DETAILS No. 3 HELICAL AND UNIVERSAL COUPLERS

NO SCALE

ALL DIMENSIONS ARE IN MILLIMETERS UNLESS OTHERWISE SHOWN

D97C

2004 Std PLAN D97C

03-26-04

Back to Table of Contents

DIST	COUNTY	ROUTE	KILOMETER POST TOTAL PROJECT	SHEET NO.	TOTAL SHEETS

Caltrans Metric

REGISTERED CIVIL ENGINEER

July 1, 2004
PLANS APPROVAL DATE

REGISTERED PROFESSIONAL ENGINEER Glenn DeCou No. C34547 Exp. 9-30-05 CIVIL STATE OF CALIFORNIA

The State of California or its officers or agents shall not be responsible for the accuracy or completeness of electronic copies of this plan sheet.

To get to the Caltrans web site, go to: http://www.dot.ca.gov

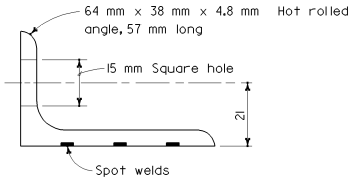

ANGLE

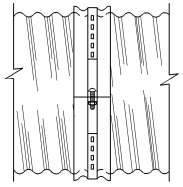

SIDE VIEW
ANGLE

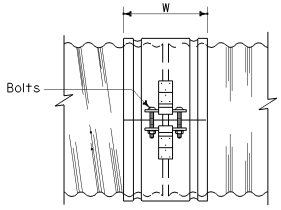

SIDE VIEW
SINGLE BAR AND STRAP

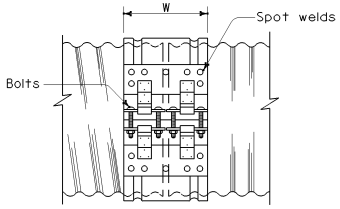

SIDE VIEW
DOUBLE BAR AND STRAP

NOTES

1. All ferrous metal coupling band connection hardware shall be galvanized or electroplated in accordance with the Standard Specifications.
2. Dimensions and thicknesses shown are minimum.
3. Spot welds shall develop minimum required strength of strap.
4. Fillet welds of equivalent strength may be substituted for spot welds or rivets.
5. Dimension depends upon whether end condition is lips up or lips down.

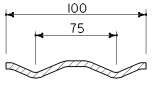

SECTION

H-100 HUGGER BAND

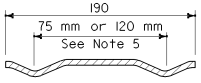

SECTION

H-190 HUGGER BAND

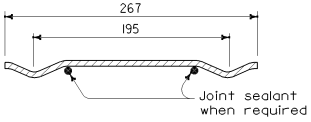

SECTION

H-267 HUGGER BAND

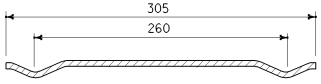

SECTION

H-305 HUGGER BAND

HUGGER COUPLING BANDS

STATE OF CALIFORNIA
DEPARTMENT OF TRANSPORTATION

CORRUGATED METAL PIPE COUPLING DETAILS No. 4 HUGGER COUPLING BANDS

NO SCALE

ALL DIMENSIONS ARE IN MILLIMETERS UNLESS OTHERWISE SHOWN

D97D

03-26-04

2004 Std PLAN D97D

Back to Table of Contents

DIST	COUNTY	ROUTE	KILOMETER POST TOTAL PROJECT	SHEET NO.	TOTAL SHEETS

Caltrans Metric

REGISTERED CIVIL ENGINEER

July 1, 2004
PLANS APPROVAL DATE

REGISTERED PROFESSIONAL ENGINEER Glenn DeCou No. C34547 Exp. 9-30-05 CIVIL STATE OF CALIFORNIA

The State of California or its officers or agents shall not be responsible for the accuracy or completeness of electronic copies of this plan sheet.

To get to the Caltrans web site, go to: http://www.dot.ca.gov

COUPLING TYPE	PIPE CORRUGATION (mm)	PIPE SIZE (mm)	W OR A (mm)	PIPE WALL THICKNESS CSP (mm)	PIPE WALL THICKNESS CAP (mm)	BAND THICKNESS CSP (mm)	BAND THICKNESS CAP (mm)	BAR AND STRAP (CSP ONLY) STRAP THICKNESS (mm)	BAR AND STRAP (CSP ONLY) BOLTS (mm ø)	BAR AND STRAP (CSP ONLY) BAR DIA (mm)	BAR AND STRAP (CSP ONLY) BAR YIELD STRENGTH (MPa)	ANGLE DIMENSIONS CSP (mm)	ANGLE DIMENSIONS CAP (mm)	ANGLE BOLTS (No.-mm ø) CSP	ANGLE BOLTS (No.-mm ø) CAP	ANGLE RIVETS ANGLE TO BAND CSP	ANGLE RIVETS ANGLE TO BAND CAP	ANGLE SPOT WELDS ANGLE TO BAND CSP
TWO PIECE INTEGRAL FLANGE	38 x 6.5	150 - 250	178	1.32 - 2.01	1.22 - 1.52	1.32	1.52							2-10	2-10			
		300 - 450	178	1.32 - 2.01		1.63								2-13				
	68 x 13	300 - 600	178	1.32 - 2.01	1.52 - 2.67	1.63	1.52							2-13	2-13			
UNIVERSAL	68 x 13	THROUGH 900	305	1.32 - 3.51	1.52 - 3.43	1.32	1.52					51 x 51 x 4.8	51 x 51 x 4.8	3-13	3-13	3-9.5 mm	3-9.5 mm	3-15 mm
		1050 - 1500	305	1.32 - 4.27	1.91 - 4.17	1.32	1.52					51 x 51 x 4.8	51 x 51 x 4.8	3-13	3-13	3-9.5 mm	3-9.5 mm	5-15 mm
		THROUGH 1800	305	1.32 - 4.27	4.17	1.32	2.67	2.01	13	22	220	51 x 51 x 4.8	51 x 51 x 4.8	3-13	3-13	3-9.5 mm	3-9.5 mm	5-15 mm
		1950 - 2100	413	4.27		2.01		DOUBLE 2.01	13	22	220							
ANNULAR	68 x 13	THROUGH 900	178	1.63 - 3.51	1.52 - 3.43	1.32	1.52	2.01	13	22	220	51 x 51 x 4.8	51 x 51 x 4.8	2-13	2-13	3-9.5 mm	3-9.5 mm	3-15 mm
		1050 - 1800	305	1.63 - 4.27	1.91 - 4.17	1.32	2.67	2.01	13	22	220	51 x 51 x 4.8	51 x 51 x 4.8	3-13	3-13	3-9.5 mm	3-9.5 mm	5-15 mm
		1950 - 2100	305	4.27		2.01		2.77	13	22	310	51 x 51 x 4.8		3-13		3-9.5 mm		5-15 mm
	75 x 25	1200 - 2250	355	1.63 - 2.77		1.32		2.01	13	22	220	51 x 51 x 4.8		3-13		3-9.5 mm		5-15 mm
		2400 - 3000	355	2.01 - 2.77		1.32		2.77	13	22	310	51 x 51 x 4.8		3-13		4-9.5 mm		
		1050 - 2700	355		1.52 - 3.43		1.52						51 x 51 x 4.8		3-13		3-9.5 mm	
HELICAL	68 x 13	THROUGH 900	305	1.32 - 3.51	1.52 - 3.43	1.32	1.52	2.01	13	22	220	51 x 51 x 4.8	51 x 51 x 4.8	3-13	3-13	3-9.5 mm	3-9.5 mm	3-15 mm
		1050 - 1800	305	1.32 - 4.27	1.91 - 4.17	1.32	1.52	2.01	13	22	220	51 x 51 x 4.8	51 x 51 x 4.8	3-13	3-13	3-9.5 mm	3-9.5 mm	5-15 mm
		1950 - 2100	305	4.27		2.01		2.77	13	22	310	51 x 51 x 4.8		3-13		3-9.5 mm		5-15 mm
	75 x 25	1200 - 2250	355	1.63 - 2.77		1.32		2.01	13	22	220	51 x 51 x 4.8		3-13		3-9.5 mm		5-15 mm
		2400 - 3000	355	2.01 - 2.77		1.32		2.77	13	22	310	51 x 51 x 4.8		3-13		4-9.5 mm		
		1050 - 2700	355		1.52 - 3.43		1.52						51 x 51 x 4.8		3-13		3-9.5 mm	
HUGGER	68 x 13 REROLLED END	300 - 1350	100	1.32 - 2.77		1.32						64 x 38 x 4.8	64 x 38 x 4.8	1-13				3-15 mm
		1500 - 1650	100	2.77		1.63						64 x 38 x 4.8	64 x 38 x 4.8	1-13				3-15 mm
		900 - 1200	100	3.51		1.63						64 x 38 x 4.8	64 x 38 x 4.8	1-13				3-15 mm
		THROUGH 1800	267	1.32 - 4.27		1.32		2.01	13	22	220							
		1950 - 2100	267	4.27		2.01		2.77	13	22	310							
	75 x 25 REROLLED END	1200 - 2250	267	1.63 - 2.77		1.32		2.01	13	22	220							
		2400 - 3000	267	2.01 - 2.77		1.32		2.77	13	22	310							
	125 x 25 REROLLED END	1200 - 1650	190	1.63 - 2.77		1.63		2.01	13	22	220	64 x 38 x 4.8	64 x 38 x 4.8	1-13				3-15 mm
		1800 - 2250	190	1.63 - 2.01		1.63		2.01	13	22	220	64 x 38 x 4.8	64 x 38 x 4.8	1-13				3-15 mm
		1200 - 2250	190	1.63 - 3.51		1.63		2.01	13	22	220							
		1200 - 3000	305 SEE	1.63 - 2.77		1.63		2.01	13	22	220							
		1200 - 2100	305 NOTE	3.51		1.63		2.01	13	22	220							
		2250 - 3000	305 11	3.51		1.63		DOUBLE 2.01	13	22	220							
HAT BAND	68 x 13 REROLLED END	300 - 1350	70	1.32 - 2.77		1.63						64 x 38 x 4.8		1-13				
		1500 - 1650	70	2.77		1.63						64 x 38 x 4.8	64 x 38 x 4.8	1-13				3-15 mm
		THROUGH 1050	70	3.51		1.63						64 x 38 x 4.8	64 x 38 x 4.8	1-13				3-15 mm
		THROUGH 1650	70	3.51		1.63		2.01	13	22	220							
		THROUGH 1650	70	4.27		2.01		2.01	13	22	220							
	75 x 25 REROLLED END	1200 - 1800	70	1.63 - 2.01		1.63						64 x 38 x 4.8		1-13				3-15 mm
		1950 - 2250	70	1.63 - 2.01		1.63						64 x 38 x 4.8		1-13				3-15 mm
		1200 - 1650	70	2.77		1.63						64 x 38 x 4.8		1-13				3-15 mm
		1800 - 2700	70	2.77		2.01		2.77	13	22	220							

NOTES

1. All ferrous metal coupling band connection hardware shall be galvanized or electro-plated in accordance with the Standard Specifications.
2. For helically corrugated coupling bands, the connection angles may be oriented parallel to the pipe axis, provided connecting holes are slotted lengthwise sufficiently to allow adjustment for the helix angle.
3. Tension strap may be connected to band with either spot welds or fillet welds that develop minimum required strength of strap.
4. Use 32 mm gage line dimension on attached angle leg for rivets and spot welds.
5. Band thickness shall not be less than:
   (I) 3 standard thicknesses lighter than the thickness of the pipe for Corrugated Steel Pipe.
   (II) 2 standard thicknesses lighter than the thickness of the pipe and in no case lighter than 1.5 mm for Corrugated Aluminum Pipe.
6. Dimensions, thicknesses and strengths shown are minimum.
7. For pipe arches use same width band as for round pipe of equal periphery.
8. Fillet welds of equivalent strenght may be substituted for spot welds or rivets.
9. Spot welds shall develop minimum required strength of strap.
10. Pipe with rerolled ends having at least two 68 mm x 13 mm annular corrugations at each end with or without an upturned flange may be connected with any of the annular coupling bands shown for pipe of the same diameter and wall thickness and having 68 mm x 13 mm corrugations.
11. In the case of H-305 huggerbands, two piece bands are required for diameters through 2400 mm and three piece bands are required for diameters 2550 mm through 3000 mm.
12. Two piece bands are required for pipes greater than 1050 mm diameter.
13. The 57 mm x 51mm x 2.8 mm thick galvanized die-formed angle connector may be used in lieu of the 51mm x 51mm 4.8 mm angle connector for standard joints only on pipes through 1800 mm diameter.

STATE OF CALIFORNIA
DEPARTMENT OF TRANSPORTATION

CORRUGATED METAL PIPE COUPLING DETAILS No. 5 STANDARD JOINT

NO SCALE

ALL DIMENSIONS ARE IN MILLIMETERS UNLESS OTHERWISE SHOWN

D97E

2004 Std PLAN D97E

03-26-04

Back to Table of Contents

DIST	COUNTY	ROUTE	KILOMETER POST TOTAL PROJECT	SHEET NO.	TOTAL SHEETS

Caltrans Metric

REGISTERED CIVIL ENGINEER

July 1, 2004
PLANS APPROVAL DATE

REGISTERED PROFESSIONAL ENGINEER Glenn DeCou No. C34547 Exp. 9-30-05 CIVIL STATE OF CALIFORNIA

The State of California or its officers or agents shall not be responsible for the accuracy or completeness of electronic copies of this plan sheet.

To get to the Caltrans web site, go to: http://www.dot.ca.gov

COUPLING TYPE	PIPE CORRUGATION (mm)	PIPE SIZE (mm)	W OR A (mm)	PIPE WALL THICKNESS CSP (mm)	PIPE WALL THICKNESS CAP (mm)	BAND THICKNESS CSP (mm)	BAND THICKNESS CAP (mm)	BAR AND STRAP (CSP ONLY) STRAP THICKNESS (mm)	BAR AND STRAP BOLTS (mm ø)	BAR AND STRAP BAR DIA (mm)	BAR AND STRAP BAR YIELD STRENGTH (MPa)	ANGLE DIMENSIONS CSP (mm)	ANGLE DIMENSIONS CAP (mm)	ANGLE BOLTS (No. - mm ø) CSP	ANGLE BOLTS (No. - mm ø) CAP	ANGLE RIVETS ANGLE TO BAND CSP (mm)	ANGLE RIVETS ANGLE TO BAND CAP (mm)	ANGLE SPOT WELDS ANGLE TO BAND CSP (mm)
TWO PIECE INTEGRAL FLANGE	38 x 6.5	150-250	178	1.63-2.01	1.52	1.63	1.52							2-10	2-10			
	68 x 13	300-600	305		1.52-2.67		1.52								3-13			
UNIVERSAL	68 x 13	THROUGH 900	305	1.63-3.51	1.52-3.43	1.63	1.52	2.01	13	22	220	51 x 51 x 4.8	51 x 51 x 4.8	3-13	3-13	3-9.5	3-9.5	5-15
		1050-1500	413	1.63-4.27	1.52-4.17	1.63	1.52	DOUBLE 2.01	13	22	220	51 x 51 x 6.4	51 x 51 x 6.4	4-13	4-13	5-9.5	5-9.5	
ANNULAR	68 x 13	THROUGH 900	305	1.63-3.51	1.52-3.43	1.63	1.52					51 x 51 x 4.8	51 x 51 x 4.8	3-13	3-13	3-9.5	3-9.5	5-15
		1050-1500	305	1.63-2.01		1.63						51 x 51 x 4.8		3-13		3-9.5		5-15
		1050-1500	305	2.77-4.27	3.43-4.17	1.63	1.91					51 x 51 x 6.4	51 x 51 x 6.4	3-13	3-13	5-9.5	5-9.5	
		1650-1800	610		4.17		2.67						51 x 51 x 6.4		5-13		5-13	
		1650-2100	610	2.77-4.27		1.63						51 x 51 x 6.4		5-13		7-9.5		
		1050-1350	305		1.52-2.67		1.52						51 x 51 x 4.8		3-13		3-9.5	
	75 x 25	1200-1500	355	1.63-2.01		1.63						51 x 51 x 4.8		3-13		3-9.5		5-15
		1200-1500	355	2.77		1.63						51 x 51 x 4.8		3-13		5-9.5		
		1650-3000	635	1.63-2.77		1.63						51 x 51 x 4.8		5-13		9-9.5		
		1050-1500	355		1.52-2.67		1.52						51 x 51 x 4.8		3-13		5-9.5	
		1050-1500	355		3.43		1.91						51 x 51 x 6.4		3-13		5-9.5	
		1650-2400	635		1.52-3.43		1.52						51 x 51 x 6.4		5-13		7-9.5	
		2400-2700	635		3.43		1.91						51 x 51 x 6.4		5-13		7-9.5	
HELICAL	68 x 13	THROUGH 900	305	1.63-3.51	1.52-3.43	1.63	1.52					51 x 51 x 4.8	51 x 51 x 4.8	3-13	3-13	3-9.5	3-9.5	5-15
		1050-1350	305		1.52-2.67		1.52						51 x 51 x 4.8		3-13		3-9.5	
		1050-1500	305	1.63-2.01		1.63						51 x 51 x 4.8		3-13		3-9.5		5-15
		1050-1500	305	2.77-4.27	3.43-4.17	1.63	1.91					51 x 51 x 6.4	51 x 51 x 6.4	3-13	3-13	5-9.5	5-9.5	
		1650-2100	610	2.77-4.27		1.63						51 x 51 x 6.4		5-13		7-9.5		
		1650-1800	610		4.17		2.67						51 x 51 x 6.4		5-13		5-9.5	
	75 x 25	1200-1500	355	1.63-2.01		1.63						51 x 51 x 4.8		3-13		3-9.5		5-15
		1200-1500	355	2.77		1.63						51 x 51 x 4.8		3-13		5-9.5		
		1650-3000	635	1.63-2.77		1.63						51 x 51 x 4.8		5-13		9-9.5		
		1050-1500	355		1.52-2.67		1.52						51 x 51 x 4.8		3-13		5-9.5	
		1050-1500	355		3.43		1.91						51 x 51 x 6.4		3-13		5-9.5	
		1650-2400	635		1.52-3.43		1.52						51 x 51 x 6.4		5-13		7-9.5	
		2400-2700	635		3.43		1.91						51 x 51 x 6.4		5-13		7-9.5	

NOTES

1. All ferrous metal coupling band connection hardware shall be galvanized or electro-plated in accordance with the Standard Specifications.
2. For helically corrugated coupling bands, the connection angles may be oriented parallel to the pipe axis, provided connecting holes are slotted lengthwise sufficiently to allow adjustment for the helix angle.
3. Tension strap may be connected to band with either spot welds or fillet welds that develop minimum required strength of strap.
4. Use 32 mm gage line dimension on attached angle leg for rivets and spot welds.
5. Band thickness shall not be less than:
   (I) 3 standard thicknesses lighter than the thickness of the pipe for corrugated steel pipe.
   (II) 2 standard thicknesses lighter than the thickness of the pipe and in no case lighter than 1.5 mm for corrugated aluminum pipe.
6. Dimensions, thicknesses and strengths shown are minimum.
7. For pipe arches use same width band as for round pipe of equal periphery.
8. Fillet welds of equivalent strength may be substituted for spot welds or rivets.
9. Spot welds shall develop minimum required strength of strap.
10. Pipe with rerolled ends having at least two 68 mm x 13 mm annular corrugations at each end with or without an upturned flange may be connected with any of the annular coupling bands shown for pipe of the same diameter and wall thickness and having 68 mm x 13 mm corrugations.
11. In the case of H-305 huggerbands, two piece bands are required for diameters through 2400 mm and three piece bands are required for diameters 2550 mm through 3000 mm.
12. Two piece bands are required for pipes greater than 1050 mm diameter.

STATE OF CALIFORNIA
DEPARTMENT OF TRANSPORTATION

CORRUGATED METAL PIPE COUPLING DETAILS No. 6 POSITIVE JOINT

NO SCALE

ALL DIMENSIONS ARE IN MILLIMETERS UNLESS OTHERWISE SHOWN

D97F

2004 Std PLAN D97F

03-26-04

Back to Table of Contents

DIST	COUNTY	ROUTE	KILOMETER POST TOTAL PROJECT	SHEET NO.	TOTAL SHEETS

Caltrans Metric

REGISTERED CIVIL ENGINEER

July 1, 2004
PLANS APPROVAL DATE

REGISTERED PROFESSIONAL ENGINEER Glenn DeCou No. C34547 Exp. 9-30-05 CIVIL STATE OF CALIFORNIA

The State of California or its officers or agents shall not be responsible for the accuracy or completeness of electronic copies of this plan sheet.

To get to the Caltrans web site, go to: http://www.dot.ca.gov

POSITIVE JOINTS

COUPLING TYPE	PIPE CORRUGATION (mm)	PIPE SIZE (mm)	W OR A (mm)	PIPE WALL THICKNESS CSP (mm)	PIPE WALL THICKNESS CAP (mm)	BAND THICKNESS CSP (mm)	BAND THICKNESS CAP (mm)	BAR AND STRAP (CSP ONLY) STRAP THICKNESS (mm)	BOLTS (mm ø)	BAR DIA (mm)	BAR YIELD STRENGTH (MPa)	ANGLE DIMENSIONS CSP (mm)	ANGLE DIMENSIONS CAP (mm)	BOLTS (No.-mm ø) CSP	BOLTS (No.-mm ø) CAP	RIVETS ANGLE TO BAND CSP	RIVETS ANGLE TO BAND CAP	SPOT WELDS ANGLE TO BAND CSP
HUGGER	68 x 13 REROLLED END	THROUGH 1200	267	2.77		1.63		2.01	13	22	220							
		1350 - 1650	267	2.77		1.63		DOUBLE 2.01	13	22	220							
		THROUGH 1350	267	1.63 - 2.01		1.63		2.01	13	22	220							
		THROUGH 1500	267	3.51		2.01		DOUBLE 2.01	13	22	220							
		1650 - 1800	267	3.51		2.77		DOUBLE 2.01	13	22	220							
		THROUGH 1800	267	4.27		2.77		DOUBLE 2.77	13	22	310							
	75 x 25 REROLLED END	1200 - 2100	267	2.77		2.01		DOUBLE 2.01	13	22	220							
		1200 - 2250	267	1.63 - 2.01		1.63		DOUBLE 2.01	13	22	220							
		2400 - 2550	267	2.01		2.01		DOUBLE 2.01	13	22	220							
		2250 - 3000	267	2.77		2.77		DOUBLE 2.77	13	22	310							
HAT BAND	68 x 13 REROLLED END	300 - 750	70	1.63 - 2.01		1.63						64 x 38 x 4.8		1-13				3-15 mm
		900 - 1200	70	1.63		1.63						64 x 38 x 4.8		1-13		3-12.7 mm		3-15 mm
		900 - 1200	70	2.01		2.01		2.01	13	22	220							
		THROUGH 1050	70	2.77		2.01		2.01	13	22	220							

DOWNDRAIN

COUPLING TYPE	PIPE CORRUGATION (mm)	PIPE SIZE (mm)	W OR A (mm)	PIPE WALL THICKNESS CSP (mm)	PIPE WALL THICKNESS CAP (mm)	BAND THICKNESS CSP (mm)	BAND THICKNESS CAP (mm)	BAR AND STRAP (CSP ONLY) STRAP THICKNESS (mm)	BOLTS (mm ø)	BAR DIA (mm)	ANGLE DIMENSIONS CSP (mm)	ANGLE DIMENSIONS CAP (mm)	BOLTS (No.-mm ø) CSP	BOLTS (No.-mm ø) CAP	RIVETS ANGLE TO BAND CSP	RIVETS ANGLE TO BAND CAP	SPOT WELDS ANGLE TO BAND CSP
TWO PIECE INTEGRAL FLANGE	38 x 6.5	150	178	1.63 - 4.27		1.32							3-10				
	38 x 6.5	200 - 250	178	1.63 - 4.27	1.52 - 4.17	1.63	1.52						3-10	3-10			
ANNULAR	68 x 13	THROUGH 600	305	1.63 - 4.27	1.52 - 4.17	1.63	1.52				51 x 51 x 4.8	51 x 51 x 4.8	3-13	3-13	3-9.5 mm	3-9.5 mm	3-15 mm
HUGGER	68 x 13 REROLLED END	THROUGH 600	267	1.63 - 4.27		1.63		2.01	13	22	51 x 51 x 4.8	51 x 51 x 4.8	3-13	3-13	3-9.5 mm	3-9.5 mm	3-15 mm

NOTES

1. All ferrous metal coupling band connection hardware shall be galvanized or electroplated in accordance with the Standard Specifications.
2. For helically corrugated coupling bands, the connection angles may be oriented parallel to the pipe axis, provided connecting holes are slotted lengthwise sufficiently to allow adjustment for the helix angle.
3. Tension straps may be connected to band with either spot welds or fillet welds that develop minimum required strength of strap.
4. Use 32 mm gage line dimension on attached angle leg for rivets and spot welds.
5. Band thickness shall not be less than:
   (I) 3 standard thickness lighter than the thickness of the pipe for corrugated steel pipe.
   (II) 2 standard thickness lighter than the thickness of the pipe and in no case lighter than 1.5 mm for corrugated aluminum pipe.
6. Dimensions, thickness and strengths shown are minimum.
7. For pipe arches use same width band as for round pipe of equal periphery.
8. Fillet welds of equivalent strength may be substituted for spot welds or rivets.
9. Spot welds shall develop minimum required strength of strap.
10. Pipe with rerolled ends having at least two 68 mm x 13 mm annular corrugations at each end with or without an upturned flange may be connected with any of the annular coupling bands shown for pipe of the same diameter and wall thickness and having 68 mm x 13 mm corrugations.
11. Two piece bands are required for pipes greater than 1050 mm diameter.
12. For downdrain applications, two piece integral flange couplers shall have factory applied sleeve type rubber gaskets with a minimum length pf 175 mm measured along the length of the pipe.

STATE OF CALIFORNIA
DEPARTMENT OF TRANSPORTATION

CORRUGATED METAL PIPE COUPLING DETAILS No. 7 POSITIVE JOINTS AND DOWNDRAIN

NO SCALE

ALL DIMENSIONS ARE IN MILLIMETERS UNLESS OTHERWISE SHOWN

D97G

04-22-04

2004 Std PLAN D97G

Back to Table of Contents

DIST	COUNTY	ROUTE	KILOMETER POST TOTAL PROJECT	SHEET NO.	TOTAL SHEETS

Caltrans Metric

REGISTERED CIVIL ENGINEER

July 1, 2004
PLANS APPROVAL DATE

REGISTERED PROFESSIONAL ENGINEER Glenn DeCou No. C34547 Exp. 9-30-05 CIVIL STATE OF CALIFORNIA

The State of California or its officers or agents shall not be responsible for the accuracy or completeness of electronic copies of this plan sheet.

To get to the Caltrans web site, go to: http://www.dot.ca.gov

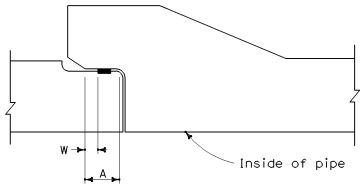

CONCRETE JOINT-FLARED BELL DESIGN

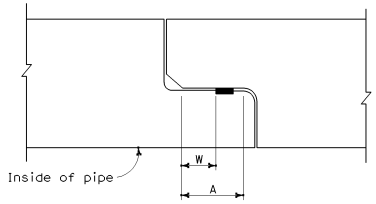

CONCRETE JOINT-FLUSH BELL DESIGN

LEGEND

- Cement Mortar
- Rubber Gasket
- Steel

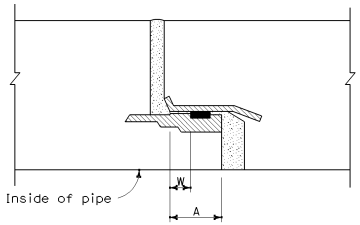

STEEL JOINT-FLUSH BELL DESIGN

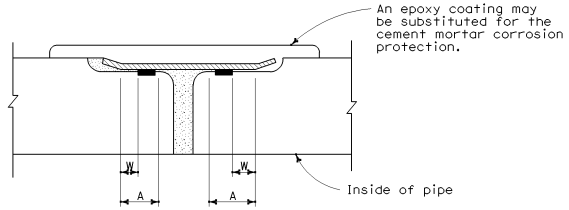

CONCRETE JOINT-DOUBLE GASKET DESIGN

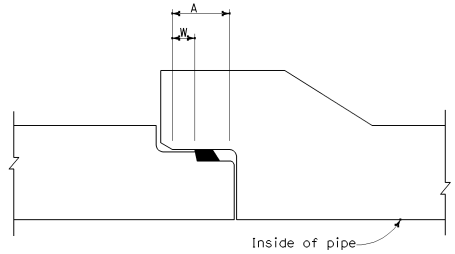

CONCRETE JOINT-SINGLE OR DOUBLE OFFSET DESIGN
(Flared or Flush Bell)

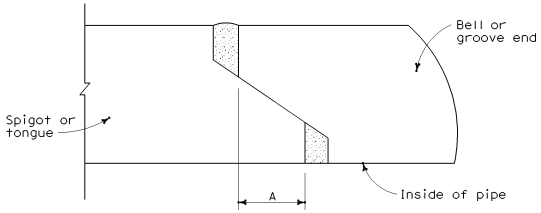

SELF-CENTERING TONGUE & GROOVE
(See Note 4)

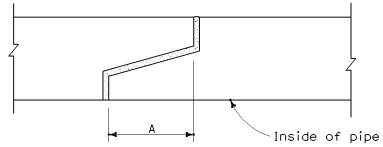

TONGUE & GROOVE DESIGN

NOTES

1. For pipe sections installed on straight alignment, the pipe sections shall be joined to provide maximum joint overlap at all points on the joint periphery, but in no case less than the values shown in Table A for "W" if the installation is required to be watertight or "A" for all other installations.

2. For pipe sections installed on curved alignment, the pipe sections shall be joined to provide maximum joint overlap on one side of the joint and not less than 6 mm overlap on the other. The 6 mm overlap shall be the "W" dimension for installations required to be watertight, or the "A" dimension for all other installations.

3. Watertight joint requirement shall typically be met with the use of rubber gaskets as shown (See Standard Specifications 61-1.02 and 65-1.06). Pipe installed with rubber gaskets shall have a minimum overlap meeting or exceeding the indicated "W" dimension shown in Table A or indicated in Note 2. Joints shown with rubber gaskets may be installed without gaskets in non-watertight applications, in which case the joint shall be sealed with sealing materials described in Standard Specifications 65-1.06, and the minimum joint overlap shall meet or exceed the "A" dimension shown in Table A or indicated in Note 2.

4. For Self-Centering Tongue and Groove Joints, the mortar shall be applied after the pipe ends are pushed together. The mortar shall be applied to the joint gap on the inside of the pipe for pipe diameters of 600 mm or more, or to the gap on the outside of the pipe for pipe smaller than 600 mm in diameter.

5. When watertight joints are required (See Note 3) and cement mortar joints are not allowed, the taper on surfaces within the "W" dimension at full joint closure and the opposing sealing surfaces of the bells and spigots on which the rubber gaskets may bear during closure of the joint and at any degree of partial closure shall form an angle of not more than 2 degrees with the longitudinal axis of the pipe.

TABLE A

PIPE DIAMETER LIMITS	MINIMUM JOINT OVERLAP			
	Standard "A"	Positive "A"	Standard "W"	Positive "W"
150 mm through 300 mm	6 mm	13 mm	6 mm	9 mm
375 mm through 825 mm	13 mm	19 mm	6 mm	13 mm
Greater than 825 mm	19 mm	25 mm	9 mm	16 mm

STATE OF CALIFORNIA
DEPARTMENT OF TRANSPORTATION

REINFORCED CONCRETE PIPE OR NON-REINFORCED CONCRETE PIPE STANDARD AND POSITIVE JOINTS

NO SCALE

ALL DIMENSIONS ARE IN MILLIMETERS UNLESS OTHERWISE SHOWN

D97H

2004 Std PLAN D97H

05-04-04

Back to Table of Contents

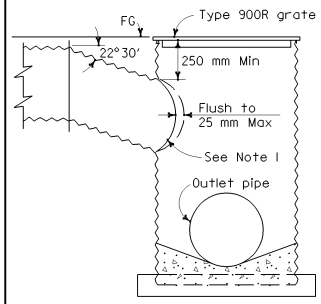

TYPE GMP INLET

See Standard Plans D75 and D77B for additional inlet details

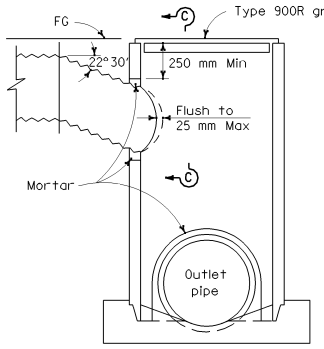

TYPE GCP INLET

See Standard Plans D75 and D77B for additional inlet details

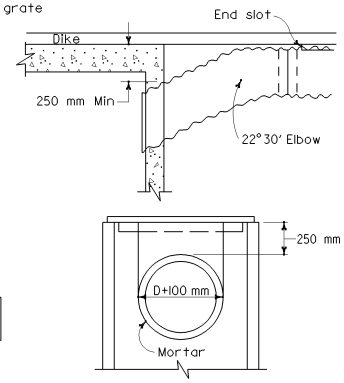

SECTION C-C

SLOTTED DRAIN CONNECTIONS TO STANDARD INLET STRUCTURES

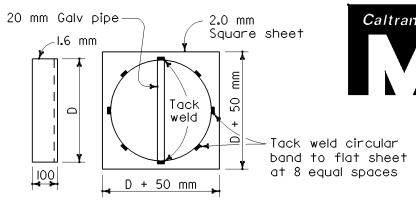

METAL CAP DETAIL

See Note 2

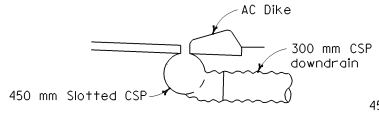

ELEVATION

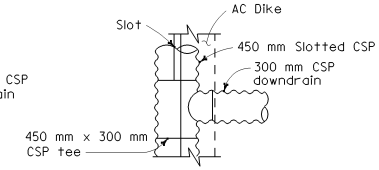

PLAN

SHOULDER INSTALLATION 450 mm SLOTTED CSP TO 300 mm CSP DOWNDRAIN

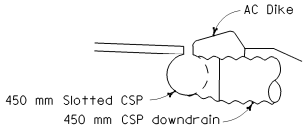

ELEVATION

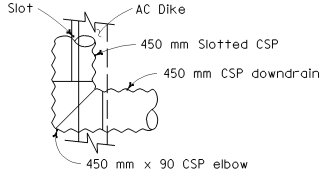

PLAN

SHOULDER INSTALLATION 450 mm SLOTTED CSP TO 450 mm CSP DOWNDRAIN

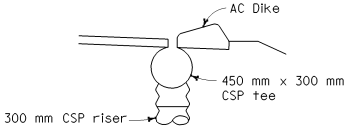

ELEVATION-END VIEW

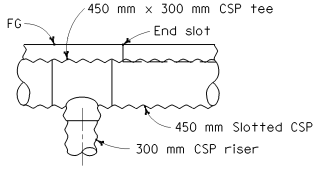

ELEVATION-SIDE VIEW

SHOULDER INSTALLATION 450 mm SLOTTED CSP TO 300 mm CSP RISER

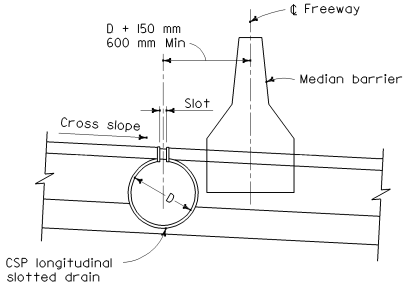

TYPICAL CROSS SECTION

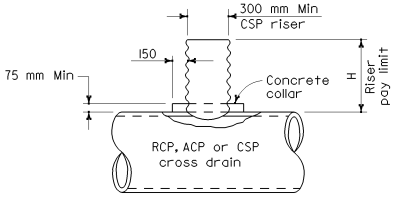

RISER CONNECTION DETAIL

NOTES

1. Either field joint sealed with a pliable mixture of sand, portland cement and emulsified asphalt (mixture of 1 part portland cement, 3-5 parts sand and 1½ parts SSI emulsified asphalt), or continuous weld.
2. "D" equals nominal pipe diameter.
3. Length of elbows and tees is included in the linear meter of pipe involved shown on the Drainage List of the project plans.
4. Watertight joints required on all slotted CSP connections.

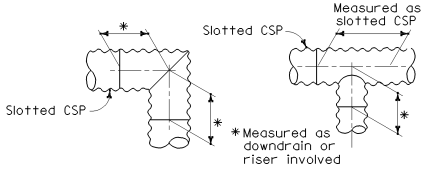

MEASUREMENT OF CORRUGATED STEEL PIPE ELBOWS AND TEES USED WITH SLOTTED DRAINS

See Note 3

Caltrans Metric

DIST	COUNTY	ROUTE	KILOMETER POST TOTAL PROJECT	SHEET NO.	TOTAL SHEETS

REGISTERED CIVIL ENGINEER

July 1, 2004
PLANS APPROVAL DATE

REGISTERED PROFESSIONAL ENGINEER Glenn DeCou No. C34547 Exp. 9-30-05 CIVIL STATE OF CALIFORNIA

The State of California or its officers or agents shall not be responsible for the accuracy or completeness of electronic copies of this plan sheet.

To get to the Caltrans web site, go to: http://www.dot.ca.gov

STATE OF CALIFORNIA
DEPARTMENT OF TRANSPORTATION

SLOTTED CORRUGATED STEEL PIPE DRAIN DETAILS

NO SCALE

ALL DIMENSIONS ARE IN MILLIMETERS UNLESS OTHERWISE SHOWN

D98A

05-04-04

Back to Table of Contents

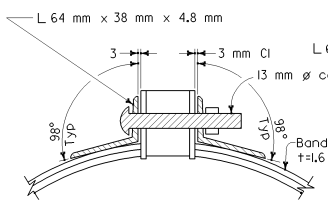

SECTION B-B

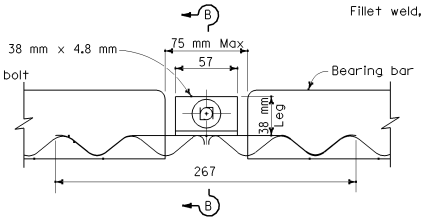

ELEVATION

MODIFIED HUGGER BAND

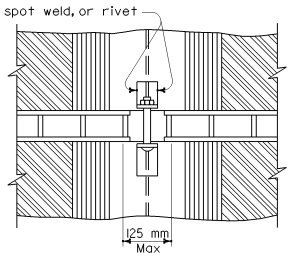

PART PLAN

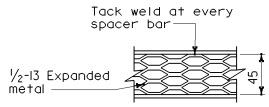

HEEL GUARD

See Note 11

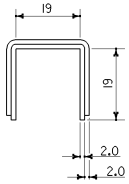

PARTIAL SECTION A-A

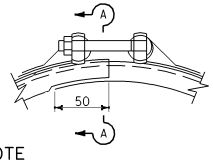

NOTE

As an alternate to swagged end an oversized bridge clip may be used.

SIDE VIEW

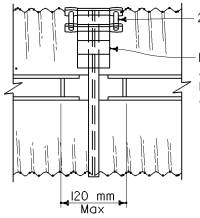

PART PLAN

SECTION E-E

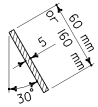

SECTION F-F

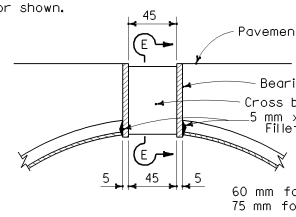

RECTANGULAR SPACER

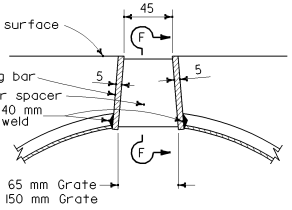

TAPERED SPACER

GRATE SLOT-SECTION

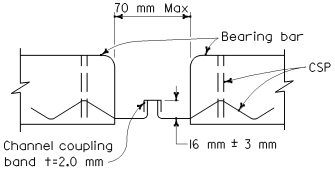

ELEVATION

BAR & STRAP CONNECTOR

See Standard Plan D97A

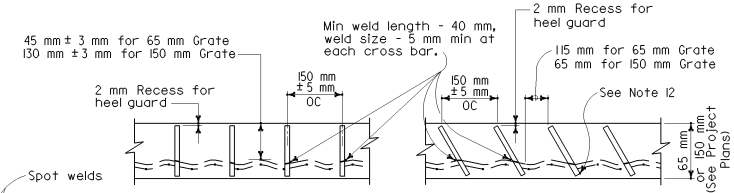

RECTANGULAR SPACER

TAPERED SPACER

GRATE SLOT-LONGITUDINAL ELEVATION VIEW

See Note 13

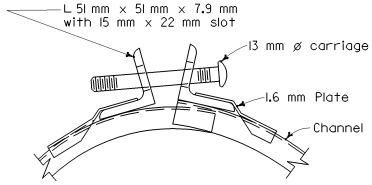

SIDE VIEW

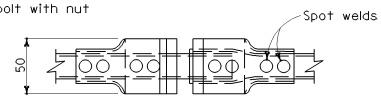

PART PLAN

ANGLE CONNECTOR

CHANNEL COUPLING BAND

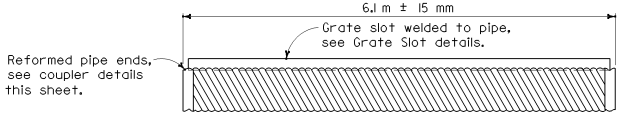

SLOTTED CORRUGATED STEEL PIPE

Caltrans Metric

DIST	COUNTY	ROUTE	KILOMETER POST TOTAL PROJECT	SHEET NO.	TOTAL SHEETS

REGISTERED CIVIL ENGINEER

July 1, 2004
PLANS APPROVAL DATE

REGISTERED PROFESSIONAL ENGINEER Glenn DeCou No. C34547 Exp. 9-30-05 CIVIL STATE OF CALIFORNIA

The State of California or its officers or agents shall not be responsible for the accuracy or completeness of electronic copies of this plan sheet.

To get to the Caltrans web site, go to: http://www.dot.ca.gov

NOTES

1. Drain pipe seams may be continuous helical lock seam or helical weld seam.
2. Drain sections shall be assembled with either of the coupling bands shown.
3. The cross bar spacer shall be welded to the bearing bars in such a manner as to develop a minimum tensile strength of 55,000 N normal to the longitudinal axis of the bearing bars.
4. The maximum variance from a straight line between the extreme top corners of the bearing bars shall be 12 mm in 6.0 m.
5. All coupling band connections shall be galvanized or coated in accordance with the Standard Specifications.
6. Spot welds shall develop minimum required strength of strap.
7. Dimensions shown are minimums.
8. Contractor to provide an adequate method of keeping the asphalt concrete out of pipe, during paving operations.
9. Minimum pipe wall thickness is 1.6 mm.
10. 600 mm Diameter will not support normal highway wheel loads.
11. Use heel guard when specified.
12. Bottom edge of cross bar spacer offset in direction of flow.
13. Unless otherwise shown on the plans or specified in the special provisions, cross bar spacers shall be either rectangular or tapered at the contractor's option.

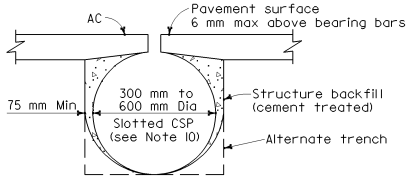

BACKFILL

STATE OF CALIFORNIA
DEPARTMENT OF TRANSPORTATION

SLOTTED CORRUGATED STEEL PIPE DRAIN DETAILS

NO SCALE

ALL DIMENSIONS ARE IN MILLIMETERS UNLESS OTHERWISE SHOWN

D98B

05-04-04

Back to Table of Contents

DIST	COUNTY	ROUTE	KILOMETER POST TOTAL PROJECT	SHEET NO.	TOTAL SHEETS

Caltrans Metric

Paul R Davies
REGISTERED CIVIL ENGINEER

July 1, 2004
PLANS APPROVAL DATE

REGISTERED PROFESSIONAL ENGINEER Paul R. Davies No. C52193 Exp. 12-31-06 CIVIL STATE OF CALIFORNIA

The State of California or its officers or agents shall not be responsible for the accuracy or completeness of electronic copies of this plan sheet.

To get to the Caltrans web site, go to: http://www.dot.ca.gov

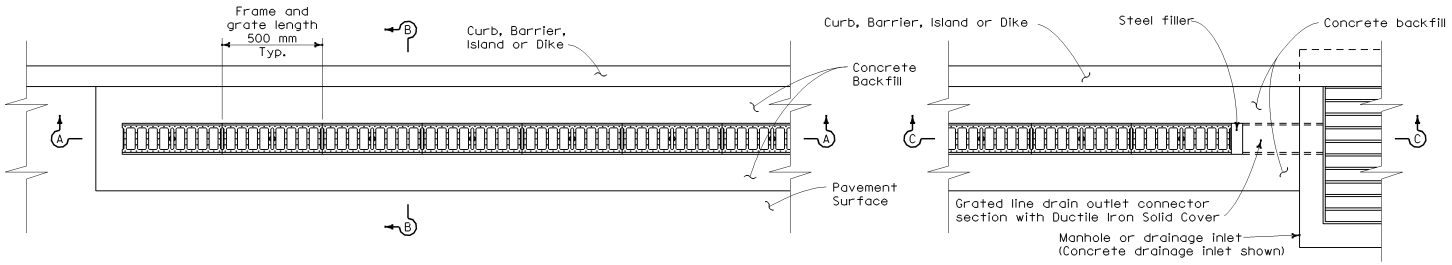

GRATED LINE DRAIN PLAN

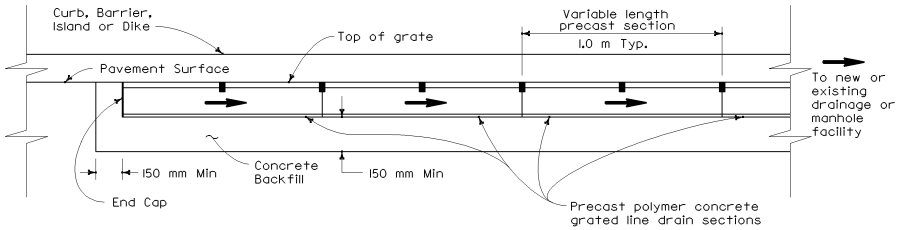

SECTION A-A

(See Note 1)

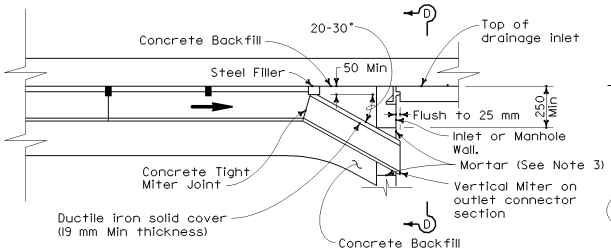

SECTION C-C

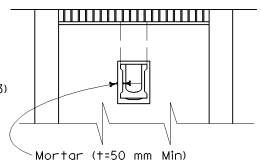

SECTION D-D

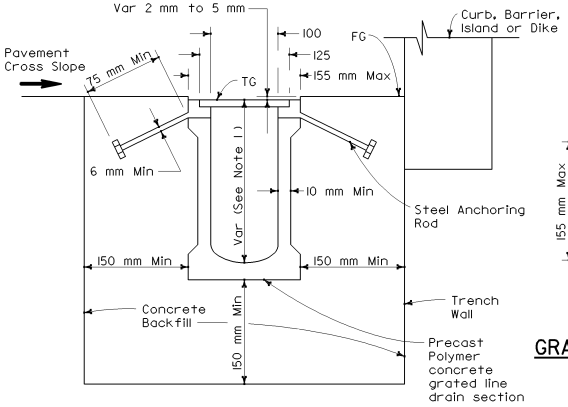

SECTION B-B

(Precast grated line drain with non-integral frame)
See Note 6

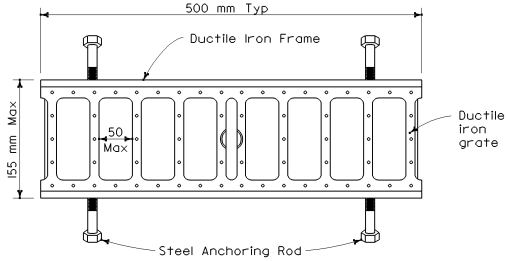

GRATED LINE DRAIN FRAME AND GRATE DETAIL

See Notes 4, 5 and 6

NOTES

1. Precast polymer concrete drain sections are available in non-sloped uniform depth sections (135 mm to 300 mm) or in 0.6 percent pre-sloped sections with graduated depths from 135 mm to 300 mm. See Project Plans for trench sections to be installed.
2. Nominal dimensions shown. Allowable tolerance +/- 2% .
3. For GMP inlet connection, field joint sealed with a pliable mixture of sand, portland cement and emulsified asphalt (mixture of 1 part portland cement, 3-5 parts sand and 1½ part SSI emulsified asphalt).
4. Within designated pedestrian paths of travel, the maximum grate opening in the direction of pedestrian traffic shall be 12.7 mm.
5. Grate patterns may vary from detail shown. See Special Provisions for requirements.
6. Steel anchoring rods not used when frame is integral with polymer concrete grated line drain section.

STATE OF CALIFORNIA
DEPARTMENT OF TRANSPORTATION

GRATED LINE DRAIN DETAILS

NO SCALE

ALL DIMENSIONS ARE IN MILLIMETERS UNLESS OTHERWISE SHOWN

D98C

2004 Std PLAN D98C

05-10-04

Back to Table of Contents

DIST	COUNTY	ROUTE	KILOMETER POST TOTAL PROJECT	SHEET NO.	TOTAL SHEETS

Caltrans Metric

William K. Fornbach
REGISTERED CIVIL ENGINEER

July 1, 2004
PLANS APPROVAL DATE

REGISTERED PROFESSIONAL ENGINEER William K. Fornbach NO. 49042 Exp. 09-30-04 CIVIL STATE OF CALIFORNIA

The State of California or its officers or agents shall not be responsible for the accuracy or completeness of electronic copies of this plan sheet.

To get to the Caltrans web site, go to: http://www.dot.ca.gov

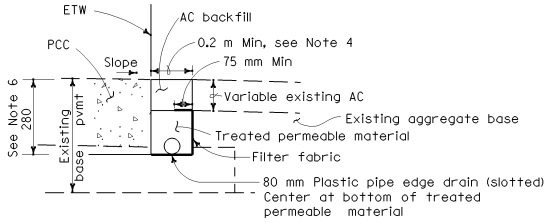

TYPE 1 STRUCTURAL SECTION DRAINAGE SYSTEM

(For existing highway facility)

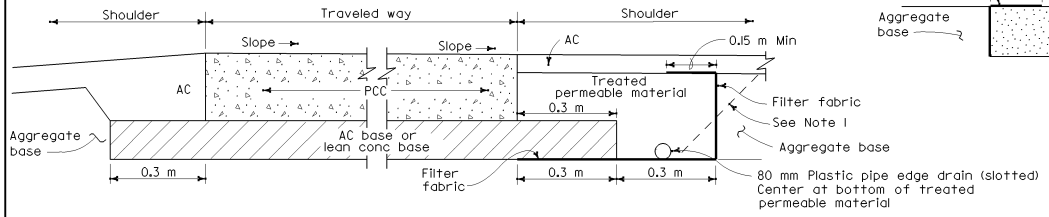

TYPE 2 STRUCTURAL SECTION DRAINAGE SYSTEM

(New construction)

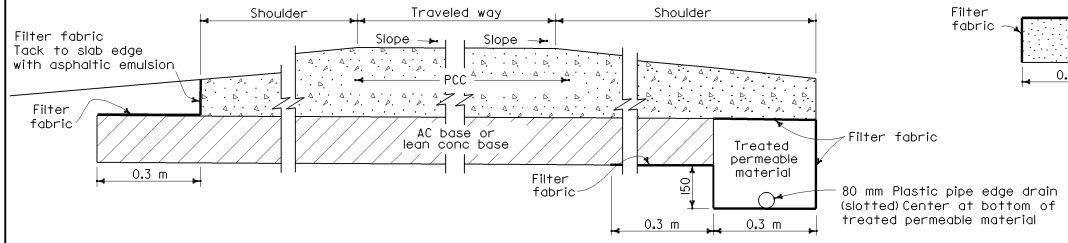

TYPE 3 STRUCTURAL SECTION DRAINAGE SYSTEM

(New construction)

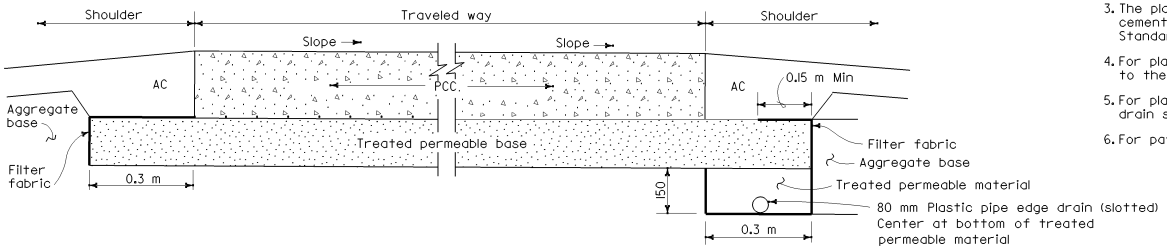

TYPE 4 STRUCTURAL SECTION DRAINAGE SYSTEM

(New construction)

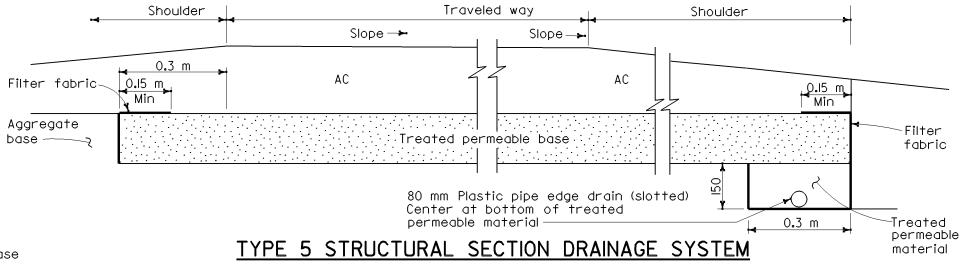

TYPE 5 STRUCTURAL SECTION DRAINAGE SYSTEM

(New construction)

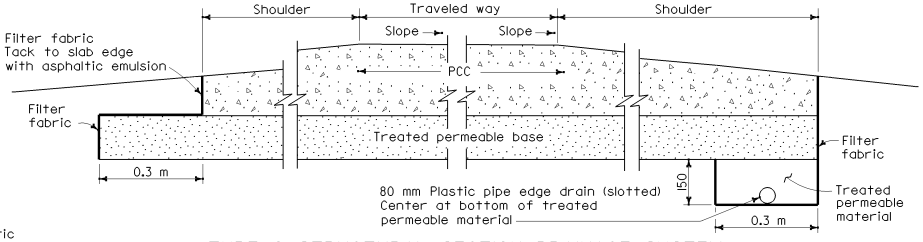

TYPE 6 STRUCTURAL SECTION DRAINAGE SYSTEM

(New construction)

NOTES

1. At the Contractor's option, on new construction, the vertical jointline (including the filter fabric) between the treated permeable material and the shoulder base/subgrade material may be rotated about its midpoint to a slope not flatter than 1:1 as shown by the dashed lines.
2. See the project plans and typical cross sections for pavement structural section details.
3. The plan layout for structural section drainage collector and outlet systems for new portland cement concrete pavement and new asphalt concrete pavement is the same as that shown on Standard Plan D99B.
4. For plastic pipe edge drain diameter larger than 80 mm, the minimum trench width shall be equal to the outside diameter of the plastic pipe plus 100 mm.
5. For plastic pipe edge drain diameters larger than 80 mm, all details for 80 mm plastic pipe edge drain shall apply.
6. For pavements thicker than 230 mm, the minimum trench depth is 0.3 m.

STATE OF CALIFORNIA
DEPARTMENT OF TRANSPORTATION

STRUCTURAL SECTION DRAINAGE SYSTEM DETAILS

NO SCALE

ALL DIMENSIONS ARE IN MILLIMETERS UNLESS OTHERWISE SHOWN

D99A

05-05-04

Back to Table of Contents

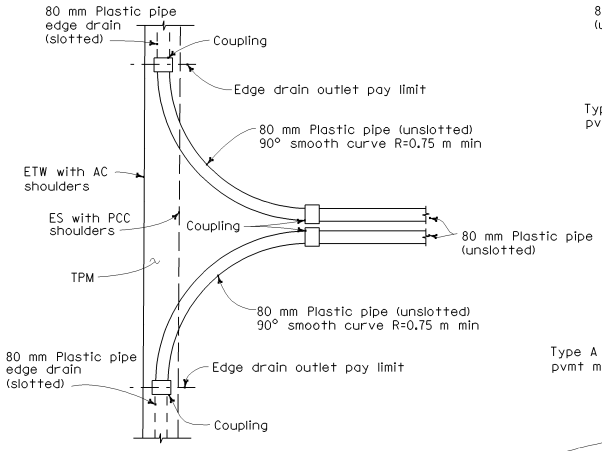

PLAN

DUAL OUTLET AND/OR VENT

See Note 2

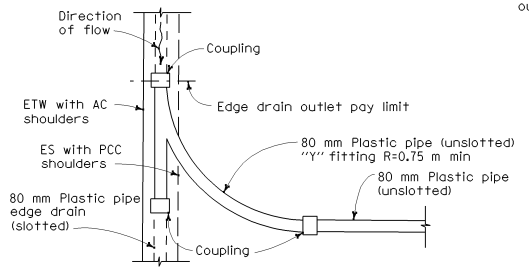

PLAN

INTERMEDIATE OUTLET

See Note 2

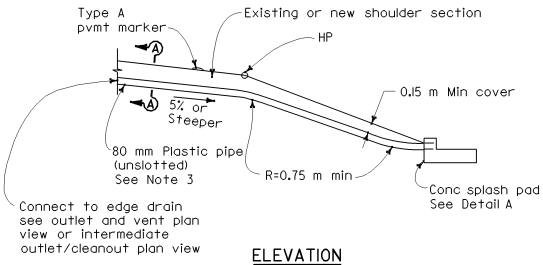

ELEVATION

TYPE A OUTLET

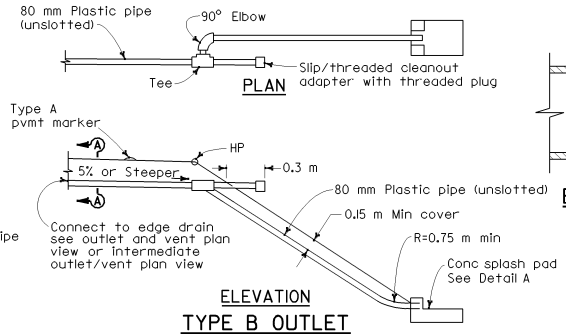

PLAN

ELEVATION

TYPE B OUTLET

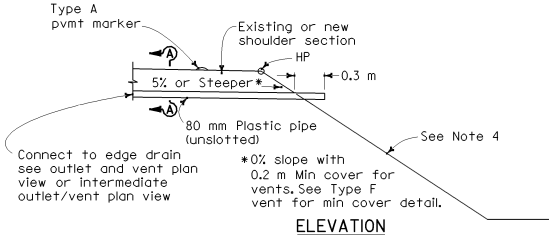

ELEVATION

TYPE C OUTLET AND/OR VENT

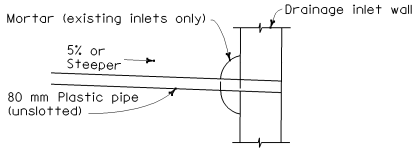

ELEVATION

TYPE D OUTLET CONNECTION TO DRAINAGE INLET

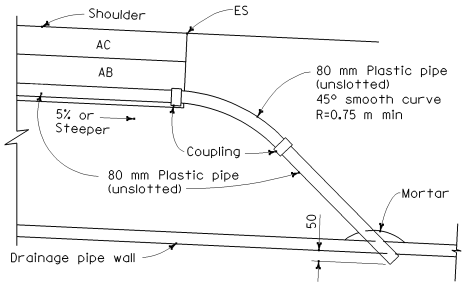

ELEVATION

TYPE E OUTLET CONNECTION TO DRAINAGE PIPE

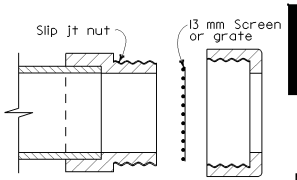

EDGE DRAIN OUTLET AND VENT COVER

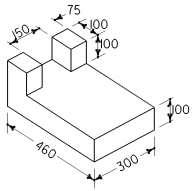

DETAIL A

CONCRETE SPLASH PAD

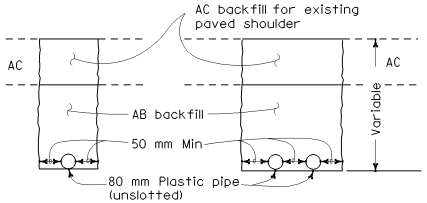

SECTION A-A

OUTLET EXCAVATION AND BACKFILL IN PAVED SHOULDERS

See Note 5

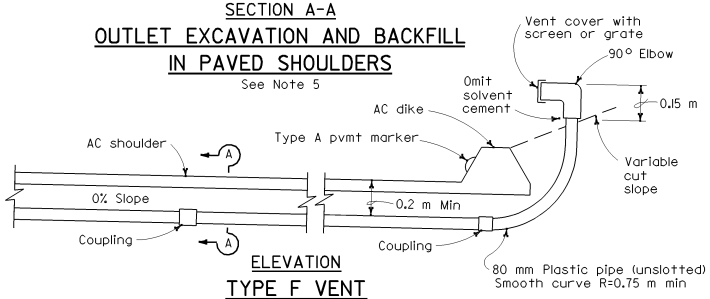

ELEVATION

TYPE F VENT

Caltrans Metric

DIST	COUNTY	ROUTE	KILOMETER POST TOTAL PROJECT	SHEET NO.	TOTAL SHEETS

REGISTERED CIVIL ENGINEER

July 1, 2004

PLANS APPROVAL DATE

REGISTERED PROFESSIONAL ENGINEER William K. Fornbach No. 49042 Exp. 09-30-04 CIVIL STATE OF CALIFORNIA

The State of California or its officers or agents shall not be responsible for the accuracy or completeness of electronic copies of this plan sheet.

To get to the Caltrans web site, go to: http://www.dot.ca.gov

NOTES

1. See project plans for location and type of outlet and/or vent installations.
2. The position of slotted plastic pipe and limits of treated permeable material shown are for the Type I structural section drainage system shown on Standard Plan D99A.
3. The maximum length of plastic pipe outlet shall be 15 m (±) measured from the longitudinal centerline of the collector trench to the pipe outlet. For pipe lengths greater than 15 m use Type B outlets.
4. See project plans for slope protection details at Type C pipe outlets.
5. Backfill with aggregate base from outside edge paved shoulder to hinge point, and backfill with native material in slope area.
6. See Standard Plan D99C for Type G vent detail used with portland cement concrete shoulders.

STATE OF CALIFORNIA
DEPARTMENT OF TRANSPORTATION

EDGE DRAIN OUTLET AND VENT DETAILS

NO SCALE

ALL DIMENSIONS ARE IN MILLIMETERS UNLESS OTHERWISE SHOWN

D99B

04-16-04

Back to Table of Contents

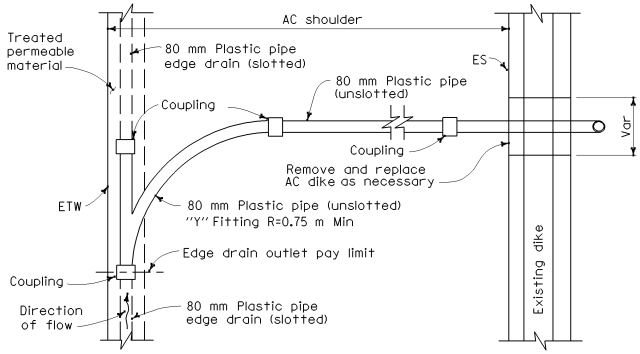

PLAN
TYPE 1 CLEANOUT
See Note 2

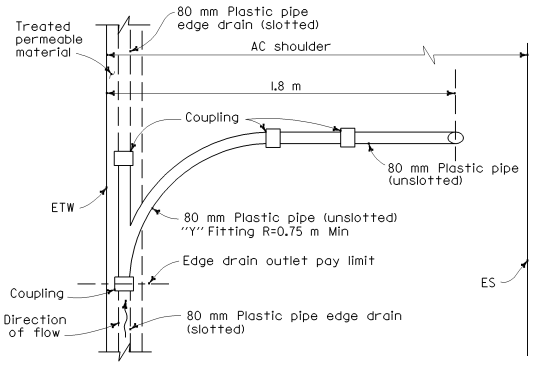

PLAN
TYPE 2 CLEANOUT
See Note 2

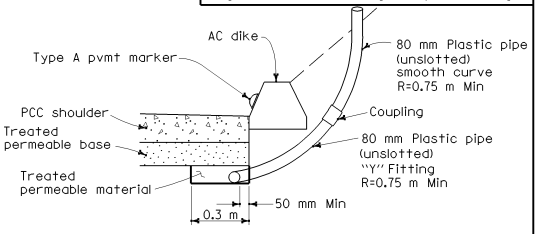

SECTION A-A
TYPE 3 CLEANOUT/TYPE G VENT

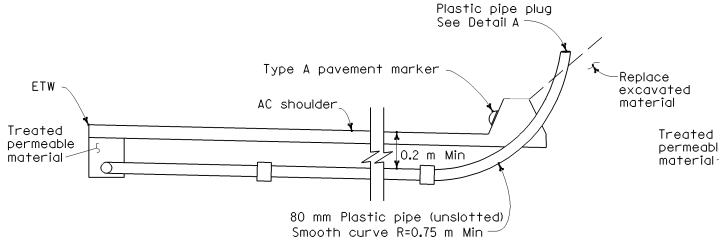

ELEVATION
TYPE 1 CLEANOUT

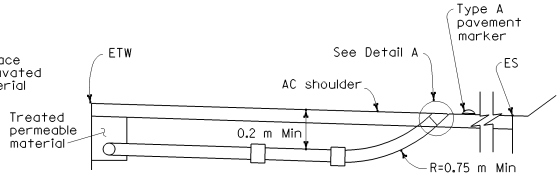

ELEVATION
TYPE 2 CLEANOUT

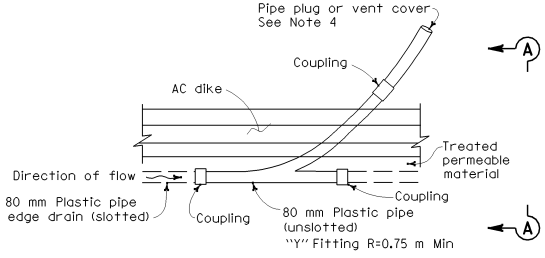

PLAN
TYPE 3 CLEANOUT/TYPE G VENT
See Note 4

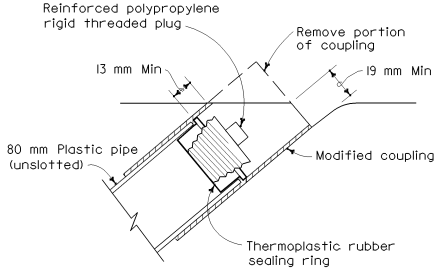

ALTERNATIVE 1

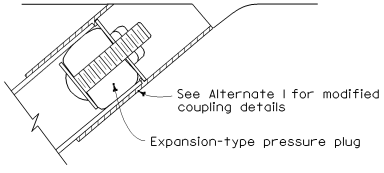

ALTERNATIVE 2

DETAIL A
PLASTIC PIPE PLUG
See Note 3

NOTES

1. See project plans for location and type of cleanout or vent installations.
2. The position of slotted plastic pipe and limits of treated permeable material shown are for the Type 1 structural section drainage system shown on Standard Plan D99A.
3. Other types of plugs may be substituted with the Engineer's approval.
4. The Type 3 cleanout and Type G vent is for use with portland cement concrete shoulders. The Type 6 structural section drainage system from Standard Plan D99A is shown. Use plastic pipe plug shown in Detail A with Type 3 cleanouts. Use vent cover shown on Standard Plan D99B with Type G vents.

Caltrans Metric

DIST	COUNTY	ROUTE	KILOMETER POST TOTAL PROJECT	SHEET NO.	TOTAL SHEETS

William K. Fornbach
REGISTERED CIVIL ENGINEER
July 1, 2004
PLANS APPROVAL DATE

REGISTERED PROFESSIONAL ENGINEER William K. Fornbach NO. 49042 Exp. 09-30-04 CIVIL STATE OF CALIFORNIA

The State of California or its officers or agents shall not be responsible for the accuracy or completeness of electronic copies of this plan sheet.

To get to the Caltrans web site, go to: http://www.dot.ca.gov

STATE OF CALIFORNIA
DEPARTMENT OF TRANSPORTATION

EDGE DRAIN CLEANOUT AND VENT DETAILS

NO SCALE

ALL DIMENSIONS ARE IN MILLIMETERS UNLESS OTHERWISE SHOWN

D99C

04-16-04

Back to Table of Contents

DIST	COUNTY	ROUTE	KILOMETER POST TOTAL PROJECT	SHEET NO.	TOTAL SHEETS

Caltrans Metric

REGISTERED CIVIL ENGINEER

July 1, 2004
PLANS APPROVAL DATE

REGISTERED PROFESSIONAL ENGINEER William K. Fornbach No. 49042 Exp. 09-30-04 CIVIL STATE OF CALIFORNIA

The State of California or its officers or agents shall not be responsible for the accuracy or completeness of electronic copies of this plan sheet.

To get to the Caltrans web site, go to: http://www.dot.ca.gov

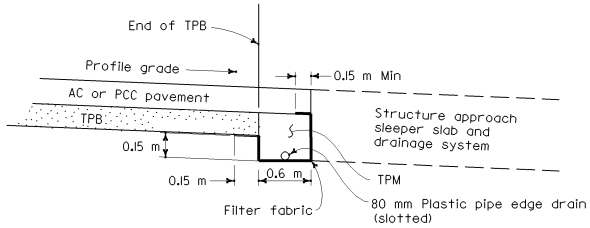

LONGITUDINAL SECTION

CROSS DRAIN INTERCEPTOR AT STRUCTURE APPROACH

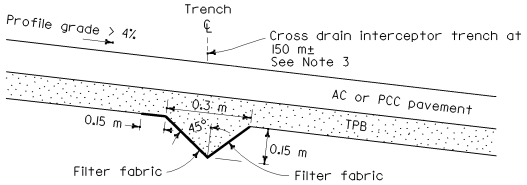

LONGITUDINAL SECTION

INTERMEDIATE CROSS DRAIN INTERCEPTOR

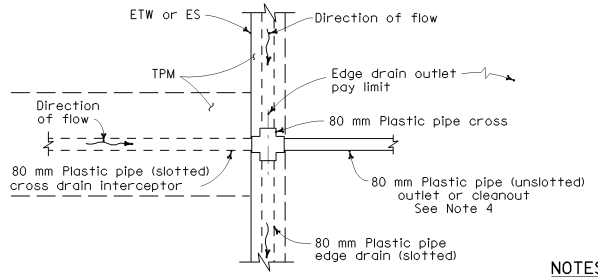

PLAN

CROSS DRAIN INTERCEPTOR OUTLET CONNECTION DETAILS

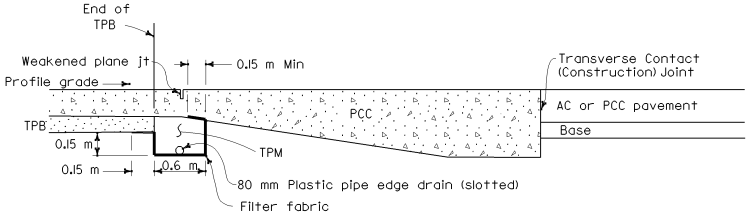

LONGITUDINAL SECTION

CROSS DRAIN INTERCEPTOR AT END ANCHOR

See Note 2

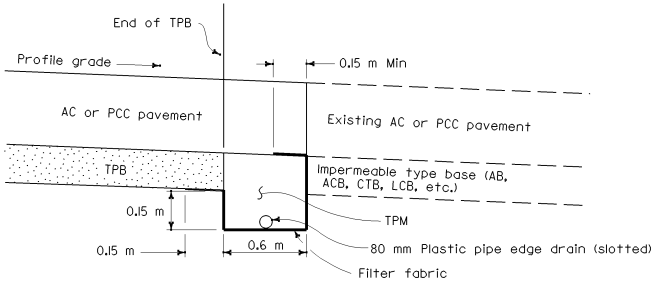

LONGITUDINAL SECTION

TERMINAL CROSS DRAIN INTERCEPTOR

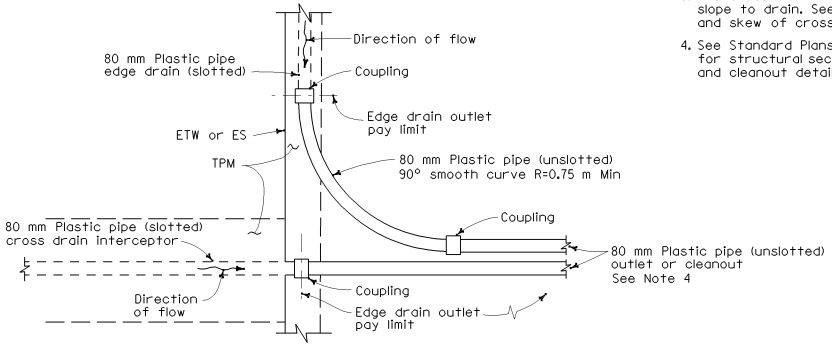

PLAN

COMBINED CROSS DRAIN INTERCEPTOR/EDGE DRAIN OUTLET DETAILS

NOTES

1. Cross drain interceptors are for use with treated permeable bases.
2. See Standard Plan A35C for Pavement End Anchor details. A typical pavement end anchor is shown.
3. The cross drain interceptor trench shall slope to drain. See project plans for location and skew of cross drains.
4. See Standard Plans D99B and D99C, for structural section drainage system outlet and cleanout details, respectively.

STATE OF CALIFORNIA
DEPARTMENT OF TRANSPORTATION

CROSS DRAIN INTERCEPTOR DETAILS

NO SCALE

ALL DIMENSIONS ARE IN MILLIMETERS UNLESS OTHERWISE SHOWN

D99D

05-05-04

Back to Table of Contents

DIST	COUNTY	ROUTE	KILOMETER POST TOTAL PROJECT	SHEET NO.	TOTAL SHEETS

Caltrans Metric

REGISTERED CIVIL ENGINEER

July 1, 2004
PLANS APPROVAL DATE

REGISTERED PROFESSIONAL ENGINEER Glenn DeCou No. C34547 Exp. 9-30-05 CIVIL STATE OF CALIFORNIA

The State of California or its officers or agents shall not be responsible for the accuracy or completeness of electronic copies of this plan sheet.

To get to the Caltrans web site, go to: http://www.dot.ca.gov

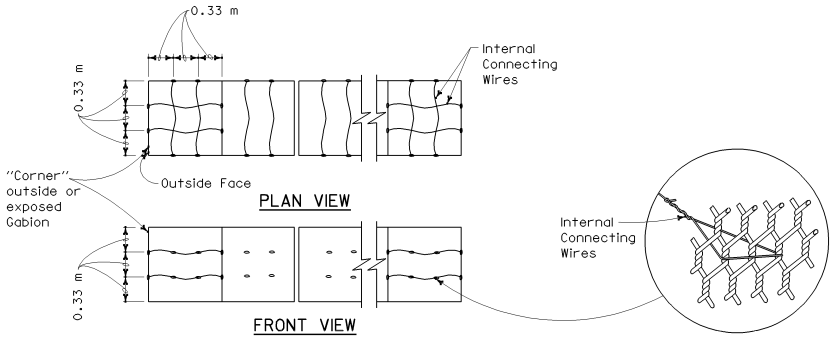

13.5-GAGE INTERNAL CONNECTING WIRES

STANDARD GABION SIZES

LETTER CODE	LENGTH	WIDTH	HEIGHT	NUMBER OF DIAPHRAGMS	VOLUME
	m				m^3
A	2	1	1	1	2.0
B	3	1	1	2	3.0
C	4	1	1	3	4.0
D	2	1	0.5	1	1.0
E	3	1	0.5	2	1.5
F	4	1	0.5	3	2.0
G	2	1	0.3	1	0.6
H	3	1	0.3	2	0.9
I	4	1	0.3	3	1.2

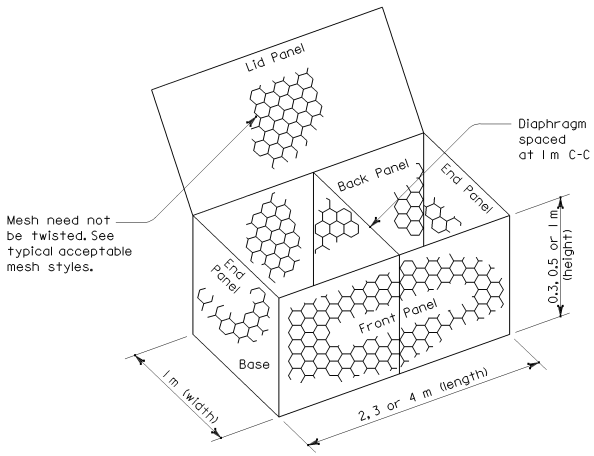

TYPICAL GABION BASKET

Note: Area of opening not to exceed 6650 mm2.

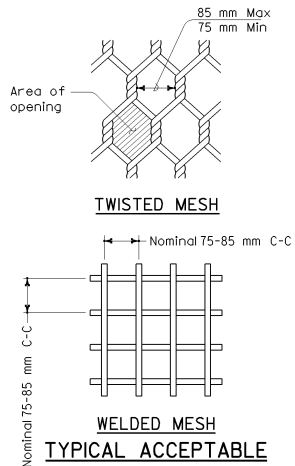

TYPICAL ACCEPTABLE MESH STYLES

NOTES

1. Internal connecting wire (13.5-gage) to be installed across width of interior Gabions and across width and length of end Gabions.
2. Internal connecting wire and Gabion mesh shall be galvanized.
3. Internal connecting wires required on all gabions 1 m high.
4. Preformed stiffeners (11-gage or 9-gage) are an acceptable alternative to internal connecting wires. Install them as recommended by manufacturer or as directed by the Engineer at 1/3 points.
5. Place rock in end Gabion cell first, and continue by filling interior Gabion cells.
6. For Gabion dimensions, refer to table "Standard Gabion Sizes".

STATE OF CALIFORNIA
DEPARTMENT OF TRANSPORTATION

GABION BASKET DETAILS No. 1

NO SCALE

ALL DIMENSIONS ARE IN MILLIMETERS UNLESS OTHERWISE SHOWN

D100A

2004 Std PLAN D100A

03-26-04

Back to Table of Contents

DIST	COUNTY	ROUTE	KILOMETER POST TOTAL PROJECT	SHEET NO.	TOTAL SHEETS

Caltrans Metric

REGISTERED CIVIL ENGINEER

July 1, 2004
PLANS APPROVAL DATE

REGISTERED PROFESSIONAL ENGINEER Glenn DeCou No. C34547 Exp. 9-30-05 CIVIL STATE OF CALIFORNIA

The State of California or its officers or agents shall not be responsible for the accuracy or completeness of electronic copies of this plan sheet.

To get to the Caltrans web site, go to: http://www.dot.ca.gov

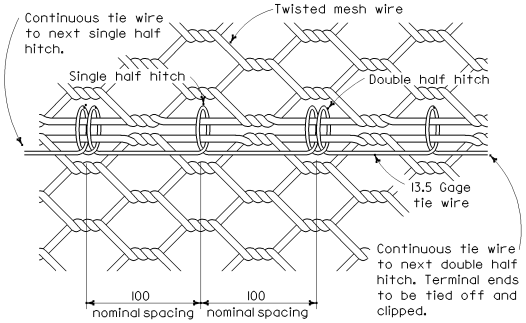

STANDARD TIE WIRE DETAIL

Alternating single and double half hitches (locked loops)
(See Note 2)

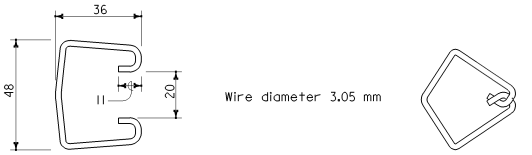

Before closure After closure

INTERLOCKING FASTENER

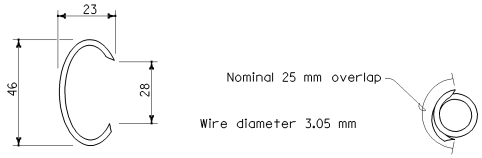

Before closure After closure

OVERLAPPING FASTENER

ALTERNATIVE GABION JOINT MATERIAL FASTENERS

(Fastener dimensions nominal)
(See Notes 3 and 4)

NOTES

1. A joint connection must be made where any panel edge meets another panel. This includes adjacent gabion baskets, individual panels within a basket, diaphragm edges, etc.
2. Standard tie wire may be used as a joint connector for either twisted or welded mesh. Spiral binder is to be used with welded mesh only.
3. When alternative Gabion joint material fasteners are used, one fastener must be installed in each mesh opening (10 fasteners minimum per meter). Mesh openings are counted along one of the panels at the joint.
4. When alternative Gabion joint material fasteners are not capable of enclosing all wires along a joint, especially at Basket-To-Basket Joints, either standard tie wire or sprial binder, as applicable, must be used.

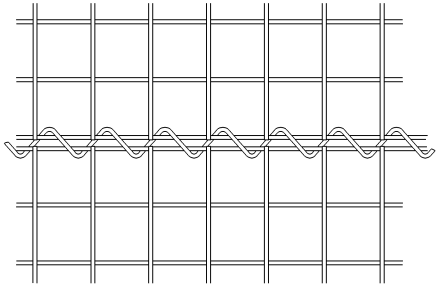

SPIRAL BINDER LACING

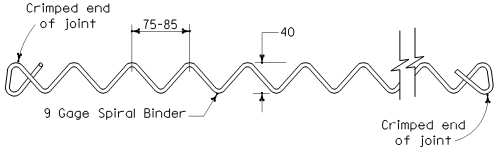

STANDARD SPIRAL BINDER

(See Note 2)

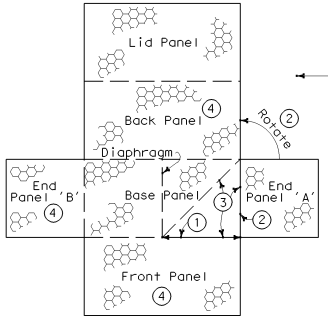

FLAT LAYOUT OF GABION BASKET

To Assemble Transitional Gabion Basket:

Step 1 Cut mesh along joint between Front Panel and Base Panel.

Step 2 Unfasten End Panel 'A' from Base Panel and rotate End Panel 'A'. Fasten End Panel Panel 'A' to Back Panel.

Step 3 Fold the cut portion of the Base Panel into upright position along diagonal from the diaphragm to the corner of the Back Panel.

Step 4 Fold the Back Panel, Front Panel and End Panel 'B' into upright positions. Fasten End Panel 'B' to the Back Panel and the Front Panel.

Step 5 Rotate End Panel 'A' and the cut portion of the Front Panel inward against the upturned portion of the Base Panel. Fasten along the overlapped portion of the Front Panel and End Panel 'A'. Fasten the overlapped portion of the Front Panel and End Panel 'A' to the folded upright portion of the Base Panel along the diagonal (described in Step 3).

Step 6 Fill the Transitional Gabion Basket with rock as per specifications.

Step 7 Close lid and fold over corner of Lid Panel. Fasten along Lid Panel edges.

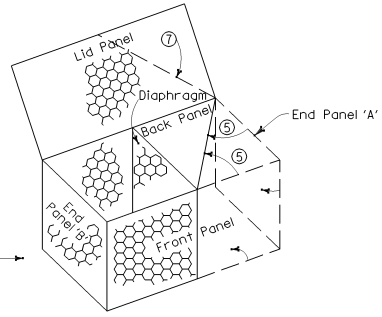

ASSEMBLED TRANSITIONAL GABION BASKET

TRANSITIONAL GABION BASKET

(For 2 m: 3 m: or 4 m gabion)

STATE OF CALIFORNIA
DEPARTMENT OF TRANSPORTATION

GABION BASKET DETAILS No. 2

NO SCALE

ALL DIMENSIONS ARE IN MILLIMETERS UNLESS OTHERWISE SHOWN

D100B

03-26-04

Back to Table of Contents

DIST	COUNTY	ROUTE	KILOMETER POST TOTAL PROJECT	SHEET NO.	TOTAL SHEETS

Caltrans Metric

REGISTERED CIVIL ENGINEER

July 1, 2004
PLANS APPROVAL DATE

REGISTERED PROFESSIONAL ENGINEER Glenn DeCou No. C34547 Exp. 9-30-05 CIVIL STATE OF CALIFORNIA

The State of California or its officers or agents shall not be responsible for the accuracy or completeness of electronic copies of this plan sheet.

To get to the Caltrans web site, go to: http://www.dot.ca.gov

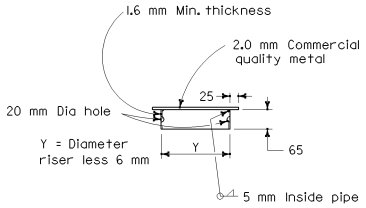

WELDED METAL COVER

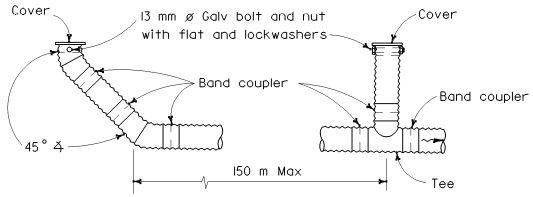

TERMINAL RISER VERTICAL RISER

Metal pipe risers and perforated metal pipe underdrain shown. Use type of pipe specified.

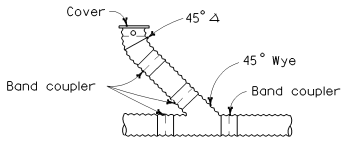

45° RISER

UNDERDRAIN RISERS

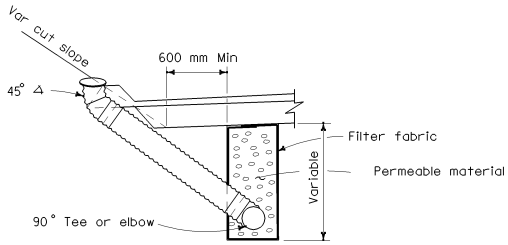

UNDERDRAIN LOCATION AND RISERS ANGLED TO CUT SLOPE

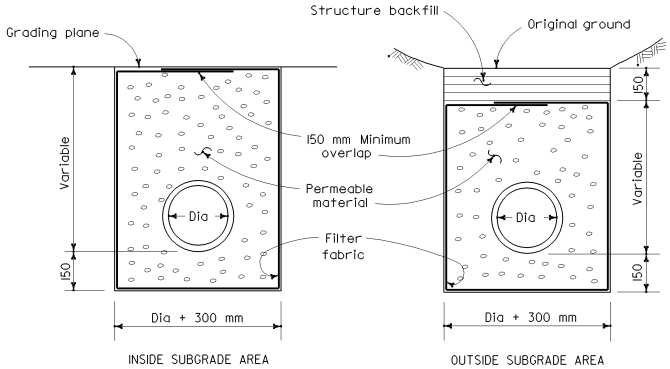

EXCAVATION AND BACKFILL

STATE OF CALIFORNIA
DEPARTMENT OF TRANSPORTATION

UNDERDRAINS

NO SCALE

ALL DIMENSIONS ARE IN MILLIMETERS UNLESS OTHERWISE SHOWN

D102

2004 Std PLAN D102

03-26-04

Back to Table of Contents

DIST	COUNTY	ROUTE	KILOMETER POST TOTAL PROJECT	SHEET NO.	TOTAL SHEETS

LICENSED LANDSCAPE ARCHITECT

July 1, 2004
PLANS APPROVAL DATE

The State of California or its officers or agents shall not be responsible for the accuracy or completeness of electronic copies of this plan sheet.

LICENSED LANDSCAPE ARCHITECT
Gregory A. Bodger
02-28-2005
Renewal Date
04-01-2004
Date
STATE OF CALIFORNIA

To get to the Caltrans web site, go to: http://www.dot.ca.gov

Caltrans Metric

A

AB	aggregate base
ABS	acrylonitrile-butadiene-styrene
AC	asphalt concrete
Adj	adjacent/adjustable
AIC	auxiliary irrigation controller
Alt	alternative
AMEND	amendment
ARV	air release valve
AUTO	automatic
AUX	auxiliary
AVB	atmospheric vacuum breaker

B

B&B	balled and burlapped
B/B	brass/bronze
B/B/PL	brass/bronze/plastic
B/PL	brass/plastic
Bit Ctd	bituminous coated
BP	booster pump
BPA	backflow preventer assembly
BPAE	backflow preventer assembly in enclosure
BPE	backflow preventer enclosure
BV	ball valve

C

CAP	corrugated aluminum pipe
CARV	combination air release valve
CCA	cam coupler assembly
CEC	controller enclosure cabinet
CHDPE	corrugated high density polyethylene
CL	chain link
CNC	control and neutral conductors
Conc	concrete
Cond	conduit
CSP	corrugated steel pipe
CST	center strip
CV	check valve

D

Dia	diameter
DIP	ductile iron pipe
DN	diameter nominal

E

EA	each
ELEC	electric/electrical
Elev	elevation
ENCL	enclosure
EP	edge of pavement
ES	edge of shoulder
EST	end strip
ESTB	establishment
ETW	edge of traveled way

F

F	full circle
F/P	full/part circle
FAU	filter assembly unit
FCV	flow control valve
FERT	fertilizer
FG	finished grade
FIPT	female iron pipe thread
FIS	fertilizer injector system
FL	flow line
FM	flow monitor
FS	flow sensor
FV	flush valve

G

Galv	galvanized
GARV	garden valve
GSP	galvanized steel pipe
GV	gate valve

H

H	half circle, height, hour
HB	hose bib
HDPE	high density polyethylene
HP	horsepower/hinge point
HPL	high pressure line
Hwy	highway

I

IC	irrigation controller
ICC	irrigation controller(s) in controller enclosure cabinet
ID	inside diameter
IFS	irrigation filtration system
IPS	iron pipe size
IPT	iron pipe thread
Irr	irrigation

K

KP	kilometer post

L

L/h	liters per hour
L/min	liters per minute
L/s	liters per second

M

Max	maximum
MBGR	metal beam guard railing
MCV	manual control valve
MIC	master irrigation controller
Min	minimum
MIPT	male iron pipe thread
Misc	miscellaneous
Mtl	material
MVP	maintenance vehicle pullout

N

NL	nozzle line
No.	number
NPT	national pipe thread

O

O/C	on center
OD	outside diameter

P

P	part circle
PB	pull box
PCC	portland cement concrete
PE	polyethylene
Pkt	packet
PL	plastic
PLT	plant/planting
PLT ESTB	plant establishment
PR	pressure rated
PRLV	pressure relief valve
PRV	pressure reducing valve
PVC	polyvinyl chloride
Pvmt	pavement

Q

Q	quarter circle
QCV	quick coupling valve

R

R	radius
RCP	reinforced concrete pipe
RCV	remote control valve
RCVM	remote control valve (master)
RCW	reclaimed water
REQ	required
R/W	right of way

S

S	slip
SCC	sprinkler control conduit
SCH	schedule
SF	state-furnished
Shld	shoulder
SI	international system of units
SST	side strip
STA	station
Std	standard
SW	sidewalk/sound wall

T

T	third circle/thread
TLS	truck loading standpipe
TQ	three quarter circle
TRVD	traveled
TT	two third circle
Typ	typical

U

UG	underground

V

VAU	valve assembly unit

W

W/	with
WM	water meter
WS	wye strainer
WSP	welded steel pipe
WWM	welded wire mesh

METRIC UNITS (SI)

SYMBOL	UNIT
mm	millimeter
m	meter
m^2	square meter
m^3	cubic meter
g	gram
kg	kilogram
s	second
kPa	kilopascal
L	liter
ha	hectare

NOTE

FOR ADDITIONAL ABBREVIATIONS, SEE STANDARD PLANS A10A AND A10B.

STATE OF CALIFORNIA
DEPARTMENT OF TRANSPORTATION

PLANTING AND IRRIGATION ABBREVIATIONS

NO SCALE

ALL DIMENSIONS ARE IN MILLIMETERS UNLESS OTHERWISE SHOWN

H1

2004 Std PLAN H1

06-15-04

Back to Table of Contents

EXISTING	PROPOSED	ITEM DESCRIPTION
		WATER METER (WM)
		BACKFLOW PREVENTER ASSEMBLY (BPA)
		BACKFLOW PREVENTER ASSEMBLY IN ENCLOSURE (BPAE)
		BACKFLOW PREVENTER ENCLOSURE (BPE)
		BOOSTER PUMP (BP)
		TRUCK LOADING STANDPIPE (TLS)
	FS	FLOW SENSOR (FS)
		MASTER IRRIGATION CONTROLLER (MIC)
		AUXILIARY IRRIGATION CONTROLLER (AIC)
		IRRIGATION CONTROLLER (IC)/ IRRIGATION CONTROLLER (IC) (BATTERY)
		IRRIGATION CONTROLLER(S) IN CONTROLLER ENCLOSURE CABINET (ICC)
		CONTROL AND NEUTRAL CONDUCTORS (CNC)
SCC	SCC	SPRINKLER CONTROL CONDUIT (SCC)
		CONDUIT (COND)
		IRRIGATION SLEEVE
dip	DIP	DUCTILE IRON PIPE (SUPPLY LINE) (MAIN) (DIP)
		GALVANIZED STEEL PIPE (SUPPLY LINE) (MAIN) (GSP)
		GALVANIZED STEEL PIPE (SUPPLY LINE) (LATERAL) (GSP)
		PLASTIC PIPE (PR 200) (SUPPLY LINE) (MAIN)
		PLASTIC PIPE (PR 200) (SUPPLY LINE) (LATERAL)
		PLASTIC PIPE (IRRIGATION LINE)
		REMOTE CONTROL VALVE (RCV) REMOTE CONTROL VALVE (MASTER) (RCVM)
		MANUAL CONTROL VALVE (MCV)
		VALVE ASSEMBLY UNIT (VAU)
		WYE STRAINER (WS)
		FILTER ASSEMBLY UNIT (FAU)
		GATE VALVE (GV)
		BALL VALVE (BV)

EXISTING	PROPOSED	ITEM DESCRIPTION
		QUICK COUPLING VALVE (QCV)
		CAM COUPLING ASSEMBLY (CCA)
		PRESSURE REDUCING VALVE (PRV)
		PRESSURE RELIEF VALVE (PRLV)
		FLOW CONTROL VALVE (FCV)
		COMBINATION AIR RELEASE VALVE (CARV)
		CHECK VALVE (CV)
		FLUSH VALVE (FV)
		NOZZLE LINE W/TURNING UNION
		IRRIGATION SYSTEM
		IRRIGATION SYSTEM TO BE REMOVED
		CHAIN LINK GATE
		QUICK COUPLING VALVE W/SPRINKLER PROTECTOR
3	3	SPRINKLER W/SPRINKLER PROTECTOR
		CONNECT TO EXISTING SYSTEM
		CAP
		CAP EXISTING

VALVE CODE

RCV SIZE (mm)
IRRIGATION CONTROLLER
CONTROLLER STATION
VALVE IN PARALLEL (IF APPLICABLE)
L/min
QUANTITY OF SPRINKLERS (WHEN SHOWN)

* 63.5-A-2b-151.4-60

MCV SIZE (mm)
VALVE NUMBER
L/min
QUANTITY OF TYPE SPRINKLERS (WHEN SHOWN)

* 50.8-3-113.5-50

* VALVE CODES FOR EXISTING VALVES ARE SHOWN IN A DASHED ENCLOSURE.

Caltrans Metric

DIST	COUNTY	ROUTE	KILOMETER POST TOTAL PROJECT	SHEET NO.	TOTAL SHEETS

LICENSED LANDSCAPE ARCHITECT

July 1, 2004
PLANS APPROVAL DATE

LICENSED LANDSCAPE ARCHITECT Gregory A. Bolger 02-28-2005 Renewal Date 04-01-2004 Date STATE OF CALIFORNIA

The State of California or its officers or agents shall not be responsible for the accuracy or completeness of electronic copies of this plan sheet.

To get to the Caltrans web site, go to: http://www.dot.ca.gov

STATE OF CALIFORNIA
DEPARTMENT OF TRANSPORTATION

PLANTING AND IRRIGATION SYMBOLS

NO SCALE

ALL DIMENSIONS ARE IN MILLIMETERS UNLESS OTHERWISE SHOWN

H2

04-08-04

2004 Std PLAN H2

Back to Table of Contents

DIST	COUNTY	ROUTE	KILOMETER POST TOTAL PROJECT	SHEET NO.	TOTAL SHEETS

Caltrans Metric

LICENSED LANDSCAPE ARCHITECT

July 1, 2004
PLANS APPROVAL DATE

LICENSED LANDSCAPE ARCHITECT
Gregory A. Bodger
02-28-2005
Renewal Date
04-01-2004
Date
STATE OF CALIFORNIA

The State of California or its officers or agents shall not be responsible for the accuracy or completeness of electronic copies of this plan sheet.

To get to the Caltrans web site, go to: http://www.dot.ca.gov

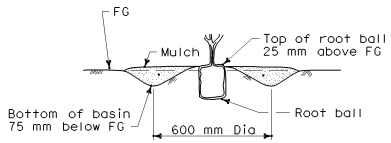

SECTION
(Flat Area)

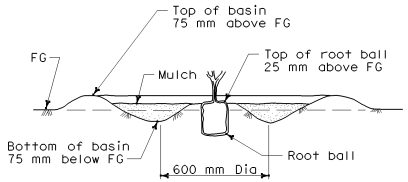

SECTION
(Flat Area)

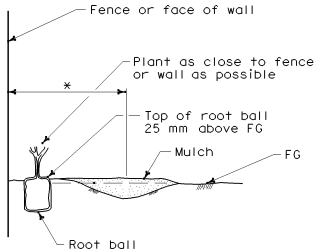

SECTION
(Flat Area)

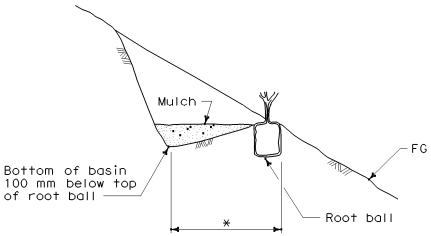

SECTION
(Slope Area)

BASIN TYPE I

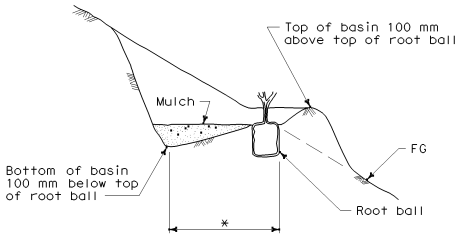

SECTION
(Slope Area)

BASIN TYPE II

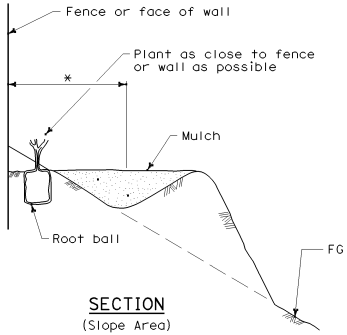

SECTION
(Slope Area)

BASIN TYPE III

* Basin area equivalent to 600 mm Dia

STATE OF CALIFORNIA
DEPARTMENT OF TRANSPORTATION

PLANTING AND IRRIGATION DETAILS

NO SCALE

ALL DIMENSIONS ARE IN
MILLIMETERS UNLESS OTHERWISE SHOWN

H3

2004 Std PLAN H3

06-18-04

Back to Table of Contents

DIST	COUNTY	ROUTE	KILOMETER POST TOTAL PROJECT	SHEET NO.	TOTAL SHEETS

Caltrans Metric

LICENSED LANDSCAPE ARCHITECT

July 1, 2004
PLANS APPROVAL DATE

The State of California or its officers or agents shall not be responsible for the accuracy or completeness of electronic copies of this plan sheet.

To get to the Caltrans web site, go to: http://www.dot.ca.gov

Top of stakes to have minimum 100 mm clearance from bottom of tree crown where applicable

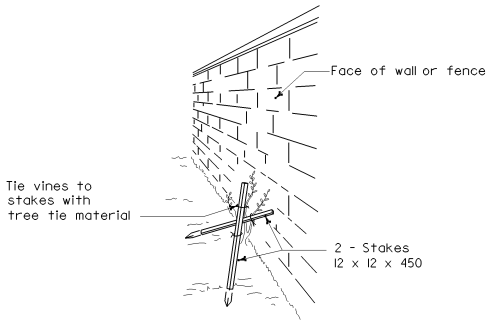

PERSPECTIVE
VINE STAKING

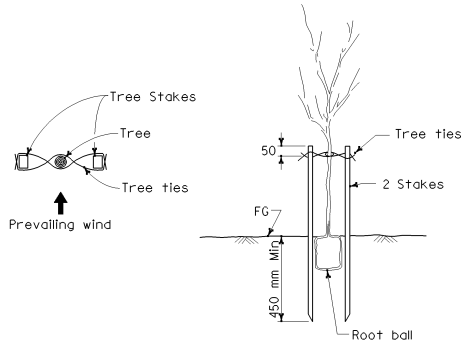

TREE STAKING

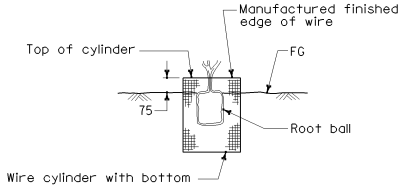

SECTION
ROOT PROTECTOR

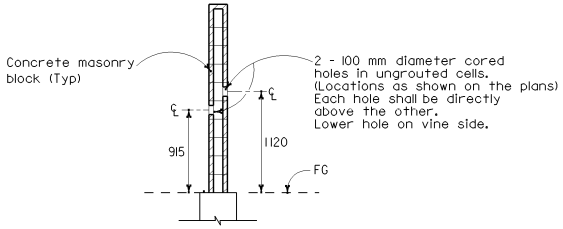

SECTION
CORE HOLE (PLANT)

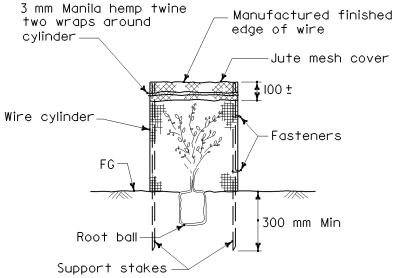

SECTION
FOLIAGE PROTECTOR

STATE OF CALIFORNIA
DEPARTMENT OF TRANSPORTATION

PLANTING AND IRRIGATION DETAILS

NO SCALE

ALL DIMENSIONS ARE IN MILLIMETERS UNLESS OTHERWISE SHOWN

H4

2004 Std PLAN H4

04-08-04

Back to Table of Contents

DIST	COUNTY	ROUTE	KILOMETER POST TOTAL PROJECT	SHEET NO.	TOTAL SHEETS

Caltrans Metric

LICENSED LANDSCAPE ARCHITECT

July 1, 2004
PLANS APPROVAL DATE

LICENSED LANDSCAPE ARCHITECT
Gregory A. Bodger
02-28-2005
Renewal Date
04-01-2004
Date
STATE OF CALIFORNIA

The State of California or its officers or agents shall not be responsible for the accuracy or completeness of electronic copies of this plan sheet.

To get to the Caltrans web site, go to: http://www.dot.ca.gov

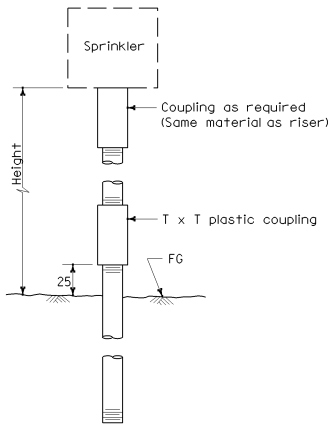

ELEVATION
RISER TYPE I

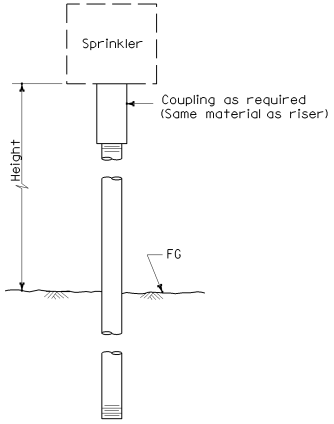

ELEVATION
RISER TYPE II

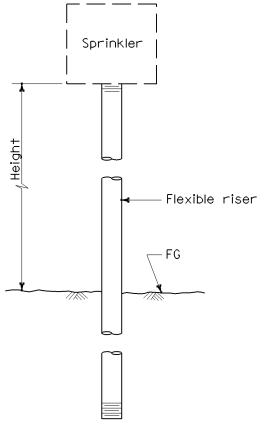

ELEVATION
RISER TYPE III

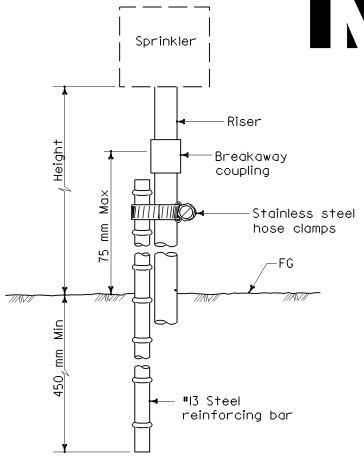

ELEVATION
RISER TYPE IV

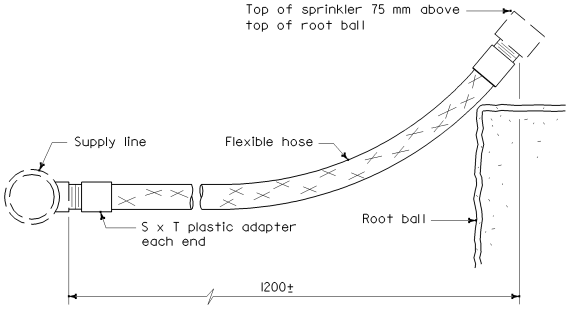

ELEVATION
RISER TYPE V

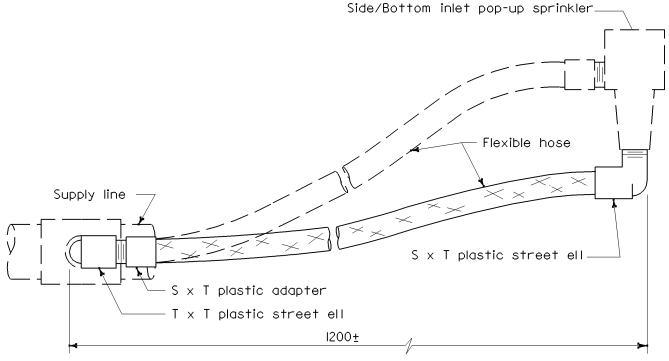

ELEVATION
RISER TYPE VI

STATE OF CALIFORNIA
DEPARTMENT OF TRANSPORTATION

PLANTING AND IRRIGATION DETAILS

NO SCALE

ALL DIMENSIONS ARE IN
MILLIMETERS UNLESS OTHERWISE SHOWN

H5

04-08-04

Back to Table of Contents

DIST	COUNTY	ROUTE	KILOMETER POST TOTAL PROJECT	SHEET NO.	TOTAL SHEETS

Caltrans Metric

LICENSED LANDSCAPE ARCHITECT

July 1, 2004
PLANS APPROVAL DATE

LICENSED LANDSCAPE ARCHITECT
Gregory A. Bolger
No. 2537
02-28-2005
Renewal Date
04-01-2004
Date
STATE OF CALIFORNIA

The State of California or its officers or agents shall not be responsible for the accuracy or completeness of electronic copies of this plan sheet.

To get to the Caltrans web site, go to: http://www.dot.ca.gov

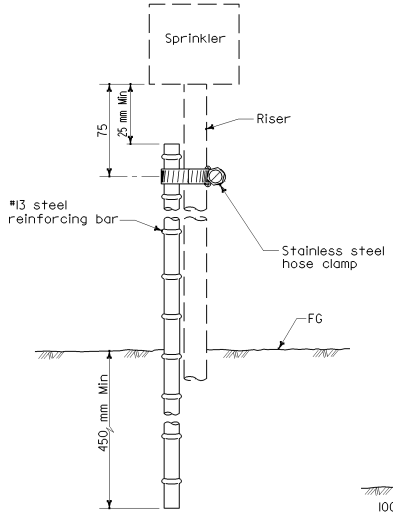

ELEVATION
RISER SUPPORT

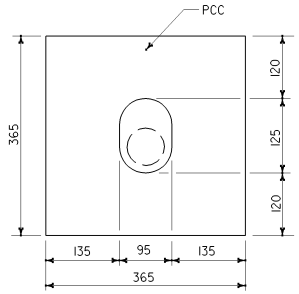

PLAN

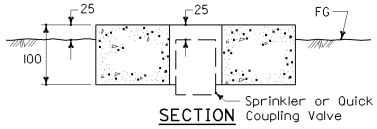

SECTION
SPRINKLER PROTECTOR TYPE I

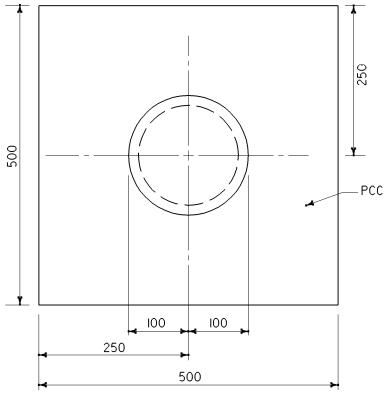

PLAN

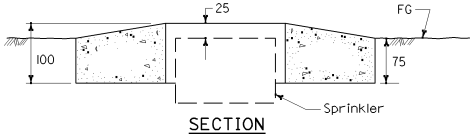

SECTION
SPRINKLER PROTECTOR TYPE II

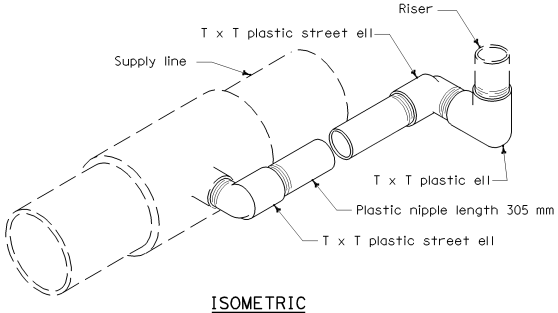

ISOMETRIC
SWING JOINT TYPE I

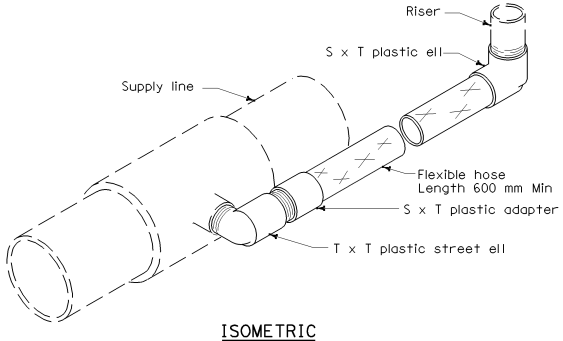

ISOMETRIC
SWING JOINT TYPE II

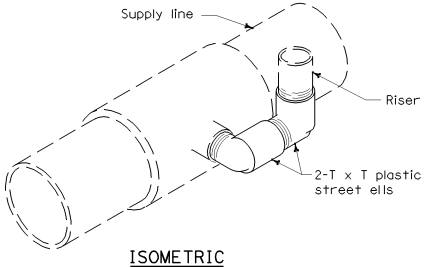

ISOMETRIC
SWING JOINT TYPE III

STATE OF CALIFORNIA
DEPARTMENT OF TRANSPORTATION

PLANTING AND IRRIGATION DETAILS

NO SCALE

ALL DIMENSIONS ARE IN MILLIMETERS UNLESS OTHERWISE SHOWN

H6

04-08-04

Back to Table of Contents

DIST	COUNTY	ROUTE	KILOMETER POST TOTAL PROJECT	SHEET NO.	TOTAL SHEETS

Caltrans Metric

LICENSED LANDSCAPE ARCHITECT

July 1, 2004
PLANS APPROVAL DATE

LICENSED LANDSCAPE ARCHITECT 02-28-2005 Renewal Date 04-01-2004 Date STATE OF CALIFORNIA

The State of California or its officers or agents shall not be responsible for the accuracy or completeness of electronic copies of this plan sheet.

To get to the Caltrans web site, go to: http://www.dot.ca.gov

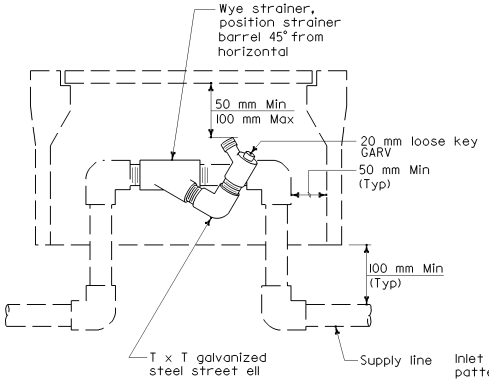

ELEVATION
WYE STRAINER

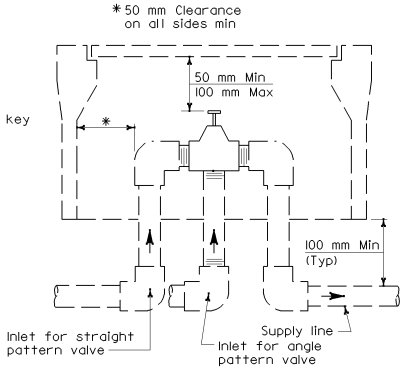

ELEVATION
VALVE

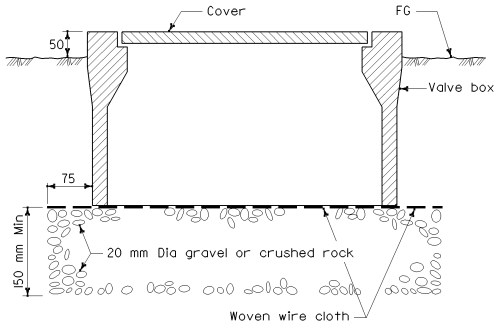

SECTION
VALVE BOX

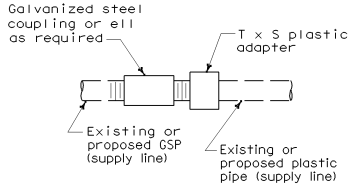

PLAN
GALVANIZED AND PLASTIC PIPE CONNECTION

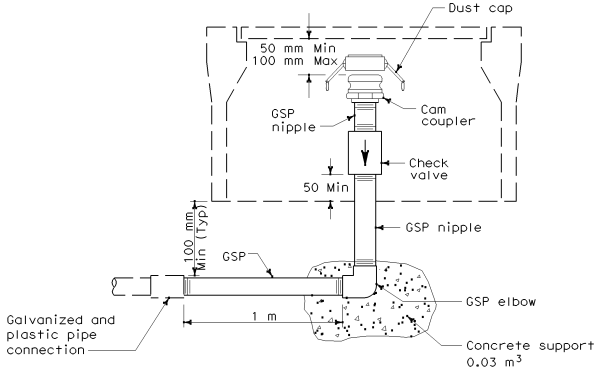

ELEVATION
CAM COUPLER ASSEMBLY

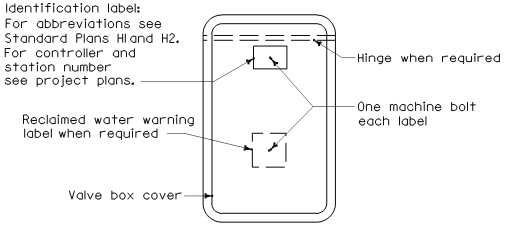

PLAN

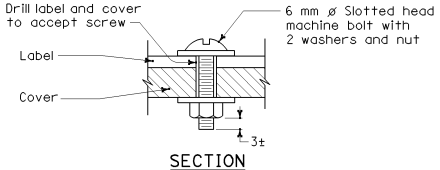

SECTION
VALVE BOX IDENTIFICATION

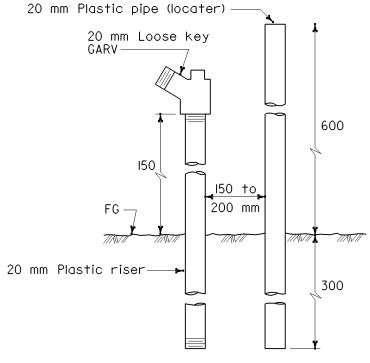

ELEVATION
FLUSH VALVE

STATE OF CALIFORNIA
DEPARTMENT OF TRANSPORTATION

PLANTING AND IRRIGATION DETAILS

NO SCALE

ALL DIMENSIONS ARE IN MILLIMETERS UNLESS OTHERWISE SHOWN

H7

2004 Std PLAN H7

04-08-04

Back to Table of Contents

DIST	COUNTY	ROUTE	KILOMETER POST TOTAL PROJECT	SHEET NO.	TOTAL SHEETS

Caltrans Metric

LICENSED LANDSCAPE ARCHITECT

July 1, 2004
PLANS APPROVAL DATE

LICENSED LANDSCAPE ARCHITECT
Gregory A. Bolger
No. 2513
02-28-2005
Renewal Date
04-01-2004
Date
STATE OF CALIFORNIA

The State of California or its officers or agents shall not be responsible for the accuracy or completeness of electronic copies of this plan sheet.

To get to the Caltrans web site, go to: http://www.dot.ca.gov

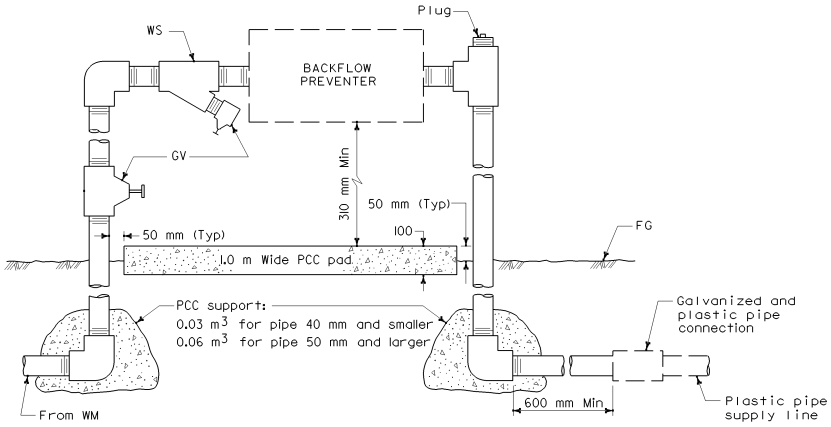

ELEVATION
BACKFLOW PREVENTER ASSEMBLY

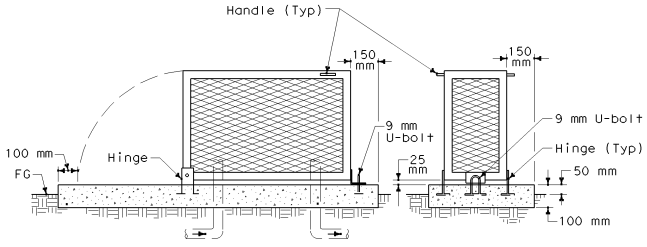

SIDE ELEVATION FRONT ELEVATION
BACKFLOW PREVENTER ASSEMBLY ENCLOSURE

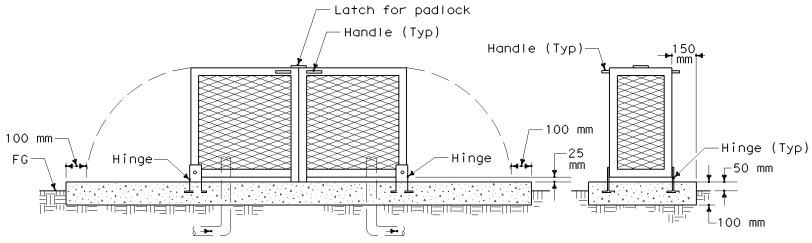

SIDE ELEVATION FRONT ELEVATION
BACKFLOW PREVENTER ASSEMBLY ENCLOSURE
Two Piece

STATE OF CALIFORNIA
DEPARTMENT OF TRANSPORTATION

PLANTING AND IRRIGATION DETAILS

NO SCALE

ALL DIMENSIONS ARE IN MILLIMETERS UNLESS OTHERWISE SHOWN

H8

06-10-04

2004 Std PLAN H8

Back to Table of Contents

DIST	COUNTY	ROUTE	KILOMETER POST TOTAL PROJECT	SHEET NO.	TOTAL SHEETS

Caltrans Metric

LICENSED LANDSCAPE ARCHITECT

July 1, 2004
PLANS APPROVAL DATE

LICENSED LANDSCAPE ARCHITECT 02-28-2005 Renewal Date 04-01-2004 Date STATE OF CALIFORNIA

The State of California or its officers or agents shall not be responsible for the accuracy or completeness of electronic copies of this plan sheet.

To get to the Caltrans web site, go to: http://www.dot.ca.gov

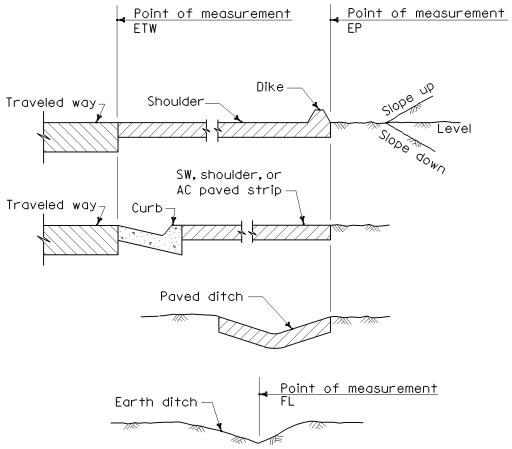

SECTION
POINTS OF MEASUREMENT

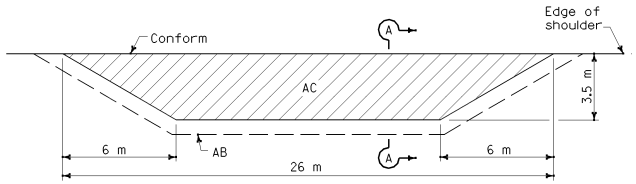

PLAN

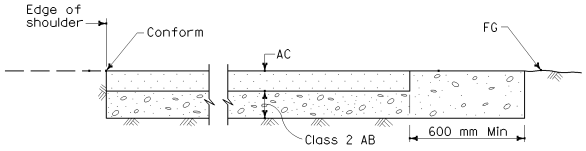

SECTION A-A
MAINTENANCE VEHICLE PULLOUT

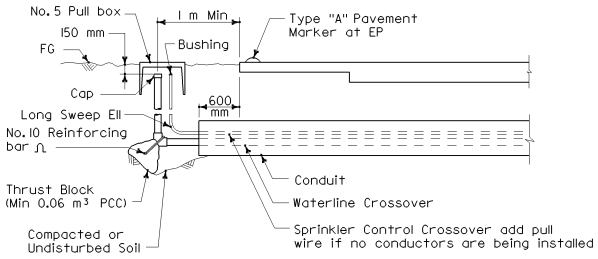

SECTION
IRRIGATION CROSSOVER

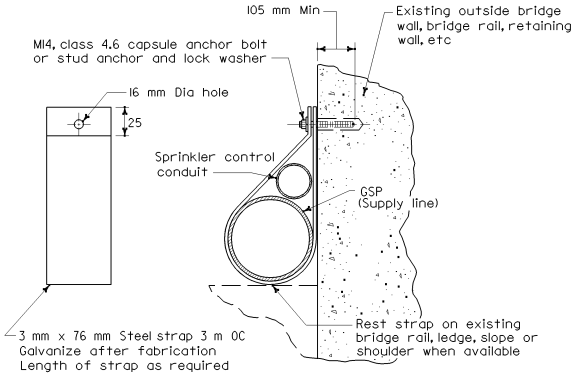

PIPE ANCHOR TYPE I

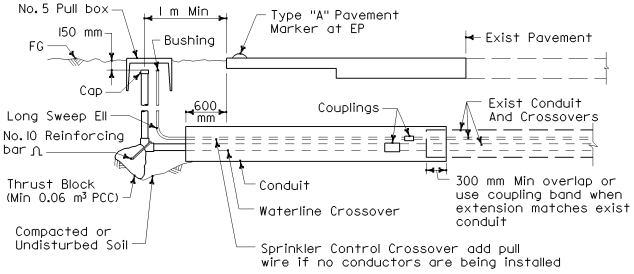

SECTION
EXTEND IRRIGATION CROSSOVER

STATE OF CALIFORNIA
DEPARTMENT OF TRANSPORTATION

PLANTING AND IRRIGATION DETAILS

NO SCALE

ALL DIMENSIONS ARE IN
MILLIMETERS UNLESS OTHERWISE SHOWN

H9

2004 Std PLAN H9

209

04-08-04

Back to Table of Contents

DIST	COUNTY	ROUTE	KILOMETER POST TOTAL PROJECT	SHEET NO.	TOTAL SHEETS

Caltrans Metric

LICENSED LANDSCAPE ARCHITECT

July 1, 2004
PLANS APPROVAL DATE

LICENSED LANDSCAPE ARCHITECT Gregory A. Bolger 2571 02-28-2005 Renewal Date 04-01-2004 Date STATE OF CALIFORNIA

The State of California or its officers or agents shall not be responsible for the accuracy or completeness of electronic copies of this plan sheet.

To get to the Caltrans web site, go to: http://www.dot.ca.gov

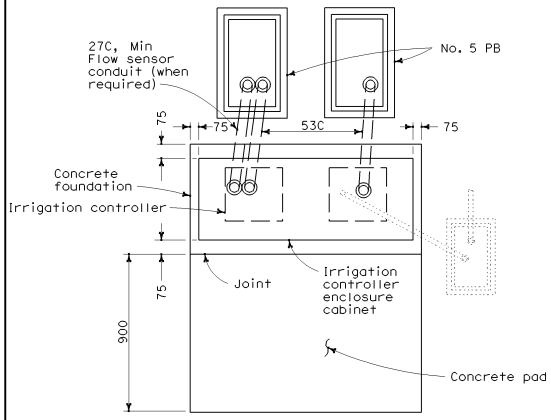

PLAN

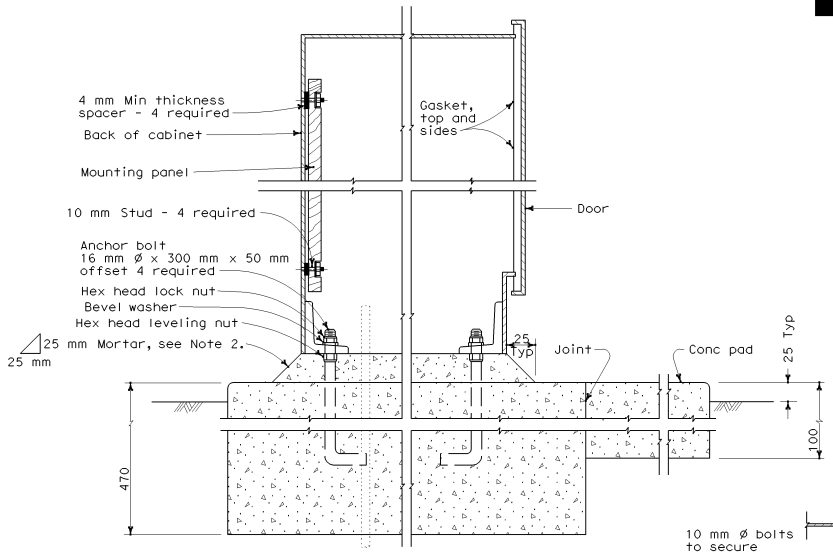

CABINET SECTION

NOTES

1. All dimensions are nominal.
2. Mortar shall be 1-part cement, 2-parts plaster sand.
3. Rain sensor unit and/or remote control valve actuator connectors. To be provided only when specified.
4. See project plans for location and number of irrigation controllers for each cabinet.
5. The electrical items shown in dropout are not labled. See Standard Plan ES-3H for electrical requirements.

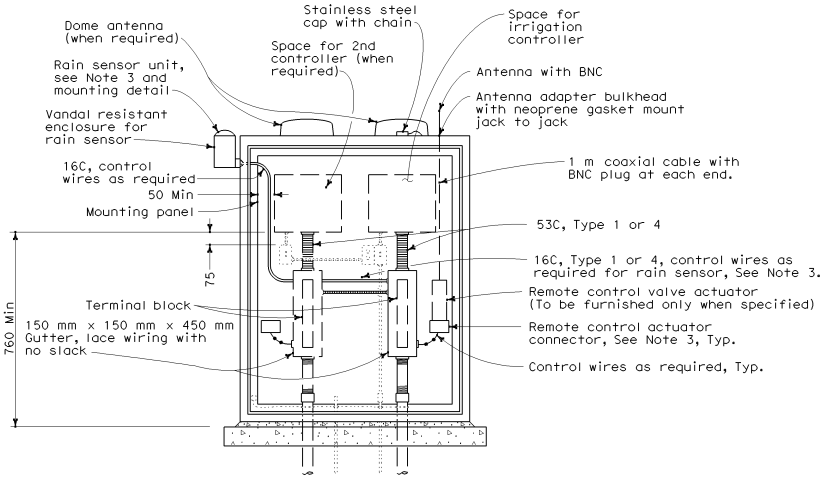

ELEVATION

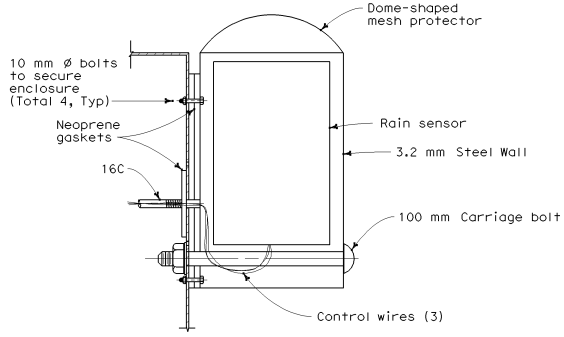

RAIN SENSOR UNIT

STATE OF CALIFORNIA
DEPARTMENT OF TRANSPORTATION

IRRIGATION CONTROLLER ENCLOSURE CABINET

NO SCALE

ALL DIMENSIONS ARE IN
MILLIMETERS UNLESS OTHERWISE SHOWN

H10

06-10-04

Back to Table of Contents

Caltrans Metric

DIST	COUNTY	ROUTE	KILOMETER POST TOTAL PROJECT	SHEET NO.	TOTAL SHEETS

REGISTERED CIVIL ENGINEER

July 1, 2004
PLANS APPROVAL DATE

REGISTERED PROFESSIONAL ENGINEER Ellis K. Hirst No. C17926 Exp. 6-30-05 CIVIL STATE OF CALIFORNIA

The State of California or its officers or agents shall not be responsible for the accuracy or completeness of electronic copies of this plan sheet.

To get to the Caltrans web site, go to: http://www.dot.ca.gov

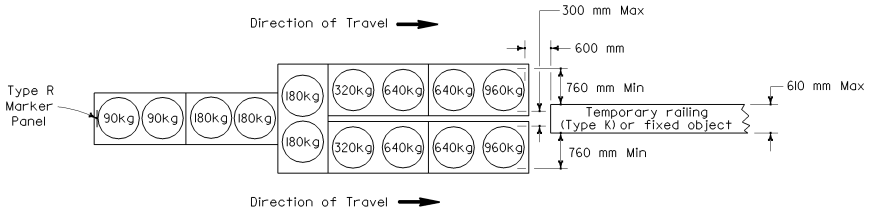

ARRAY 'TU14'

Approach speed 100 km/h or less

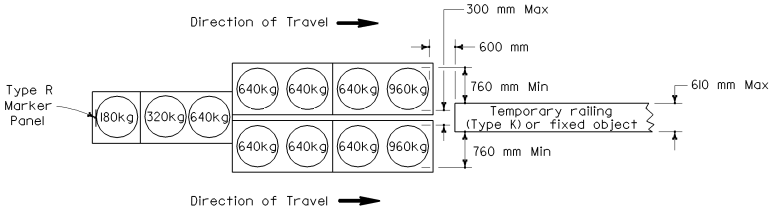

ARRAY 'TU11'

Approach speed 70 km/h or less

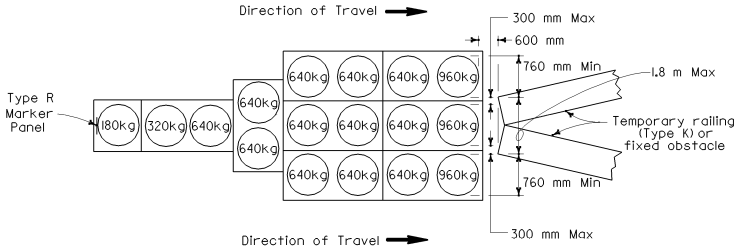

ARRAY 'TU17'

Approach speed 70 km/h or less

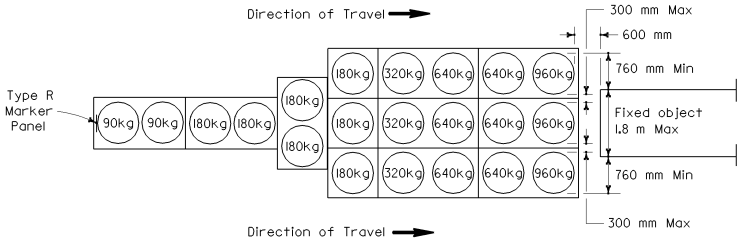

ARRAY 'TU21'

Approach speed 100 km/h or less

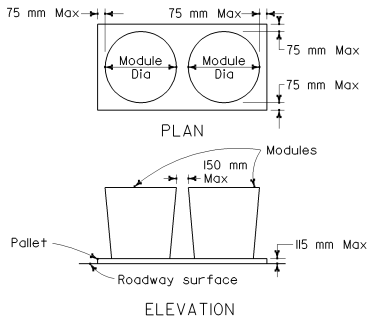

CRASH CUSHION PALLET DETAIL

NOTES

1. (XXX) Indicates sand filled module location and mass of sand in kilograms for each module. Module spacing is based on the greater diameter of the module.
2. All sand masses are nominal.
3. Temporary crash cushion arrays shall not encroach on the traveled way.
4. Place the top of Type R marker panel 25 mm below the module lid.
5. Refer to Standard Plan A73B for marker details.

STATE OF CALIFORNIA
DEPARTMENT OF TRANSPORTATION

TEMPORARY CRASH CUSHION, SAND FILLED (UNIDIRECTIONAL)

NO SCALE

ALL DIMENSIONS ARE IN MILLIMETERS UNLESS OTHERWISE SHOWN

T1A

03-30-04

Back to Table of Contents

DIST	COUNTY	ROUTE	KILOMETER POST TOTAL PROJECT	SHEET NO.	TOTAL SHEETS

Caltrans Metric

REGISTERED CIVIL ENGINEER

July 1, 2004
PLANS APPROVAL DATE

REGISTERED PROFESSIONAL ENGINEER
Ellis K. Hirst
No. C17926
Exp. 6-30-05
CIVIL
STATE OF CALIFORNIA

The State of California or its officers or agents shall not be responsible for the accuracy or completeness of electronic copies of this plan sheet.

To get to the Caltrans web site, go to: http://www.dot.ca.gov

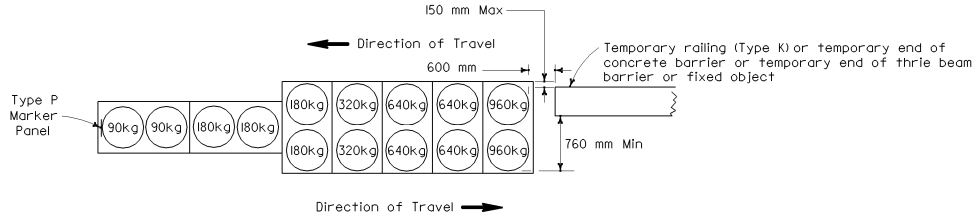

ARRAY 'TBI4'

Approach speed 100 km/h or less

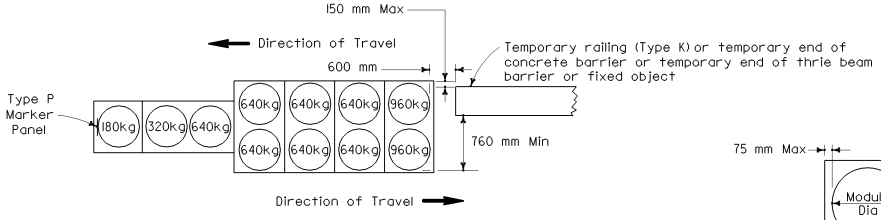

ARRAY 'TBII'

Approach speed 70 km/h or less

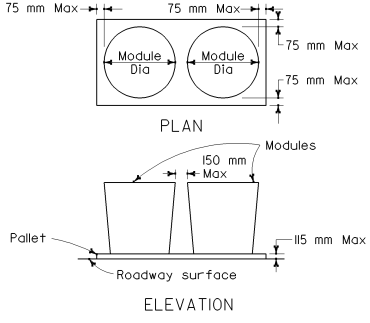

CRASH CUSHION PALLET DETAIL

NOTES

1. (XXX) indicates sand filled module location and mass of sand in kilograms for each module. Module spacing is based on the greater diameter of the module.
2. All sand masses are nominal.
3. Temporary crash cushion arrays shall not encroach on the traveled way.
4. Place the Type P marker panel so that the bottom of the panel rests upon the pallet.
5. Refer to Standard Plan A73B for marker details.

STATE OF CALIFORNIA
DEPARTMENT OF TRANSPORTATION

TEMPORARY CRASH CUSHION, SAND FILLED (BIDIRECTIONAL)

NO SCALE

ALL DIMENSIONS ARE IN MILLIMETERS UNLESS OTHERWISE SHOWN

T1B

03-30-04

Back to Table of Contents

DIST	COUNTY	ROUTE	KILOMETER POST TOTAL PROJECT	SHEET NO.	TOTAL SHEETS

Caltrans Metric

REGISTERED CIVIL ENGINEER

July 1, 2004
PLANS APPROVAL DATE

REGISTERED PROFESSIONAL ENGINEER
Ellis K. Hirst
No. C17926
Exp. 6-30-05
CIVIL
STATE OF CALIFORNIA

The State of California or its officers or agents shall not be responsible for the accuracy or completeness of electronic copies of this plan sheet.

To get to the Caltrans web site, go to: http://www.dot.ca.gov

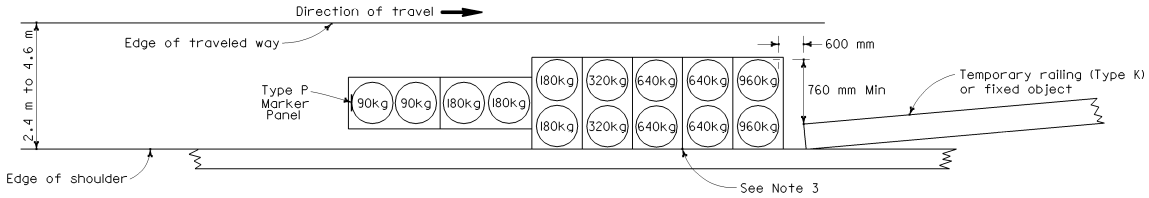

ARRAY 'TSI4'

Approach speed 100 km/h or less
See Note 9

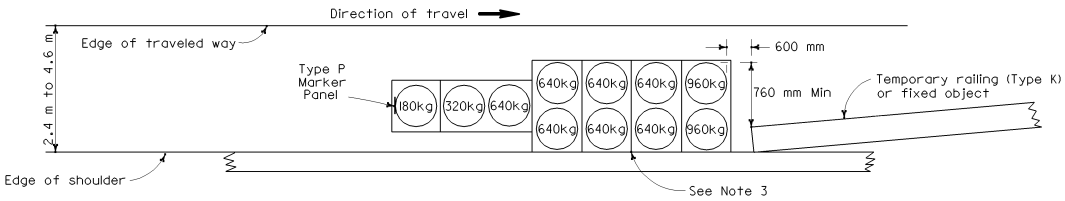

ARRAY 'TSI1'

Approach speed 70 km/h or less
See Note 9

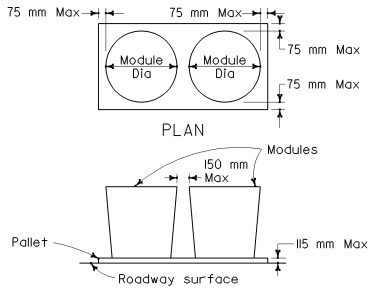

CRASH CUSHION PALLET DETAIL

NOTES

1. (XXX) Indicates sand filled module location and mass of sand in kilograms for each module. Module spacing is based on the greater diameter of the module.
2. All sand masses are nominal.
3. The temporary crash cushion arrays shown on this plan shall be used only in locations where there will be traffic on one side of the temporary crash cushion array.
4. If the fixed object or approach end of the temporary railing is less than 4.60 meters from the edge of traveled way, a temporary crash cushion is required.
5. Temporary crash cushion arrays shall not encroach on the traveled way.
6. Arrays for median shoulders shall conform to details shown on this plan for outside shoulders.
7. Place the Type P marker panel so that the bottom of the panel rest upon the pallet and faces traffic.
8. Refer to Standard Plan A73B for marker details.
9. For shoulder widths less than 2.4 m, appropriate approved crash cushion protection, other than sand filled modules, shall be provided at fixed objects and at approach ends of temporary railing. The specific type of crash cushion shall be as shown on the project plans or as specified in the Special Provisions, or if not shown on the project plans or specified in the Special Provisions, shall be as approved by the Engineer.
10. Approach speeds indicated conform to NCHRP 350 Report criteria.

STATE OF CALIFORNIA
DEPARTMENT OF TRANSPORTATION

TEMPORARY CRASH CUSHION, SAND FILLED (SHOULDER INSTALLATIONS)

NO SCALE

ALL DIMENSIONS ARE IN MILLIMETERS UNLESS OTHERWISE SHOWN

T2

03-30-04

Back to Table of Contents

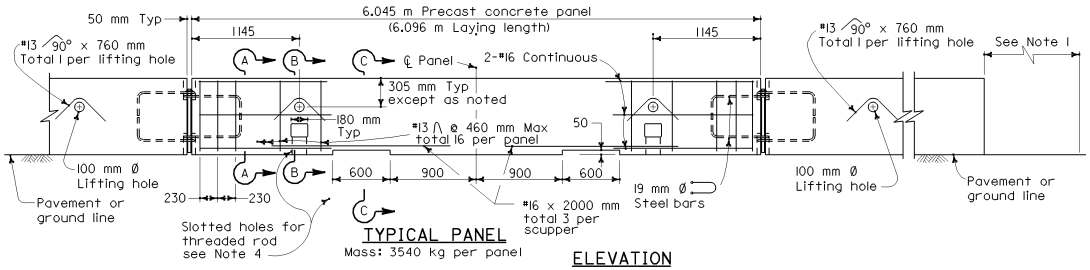

TYPICAL PANEL

Mass: 3540 kg per panel

ELEVATION

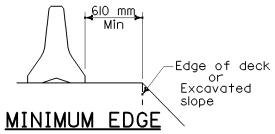

MINIMUM EDGE DISTANCE

See Note 4

Caltrans Metric

DIST	COUNTY	ROUTE	KILOMETER POST TOTAL PROJECT	SHEET NO.	TOTAL SHEETS

REGISTERED CIVIL ENGINEER

July 1, 2004

PLANS APPROVAL DATE

REGISTERED PROFESSIONAL ENGINEER Ellis K. Hirst No. C17926 Exp. 6-30-05 CIVIL STATE OF CALIFORNIA

The State of California or its officers or agents shall not be responsible for the accuracy or completeness of electronic copies of this plan sheet.

To get to the Caltrans web site, go to: http://www.dot.ca.gov

NOTES

1. For end treatment, layout and crash cushions, where needed, see Project Plans or Special Provisions.
2. All 90 mm gaps at removable panels are to be backed at the base with #25 x 260 mm dowel or 25.4 mm Ø pin each side of joint. See Section G-G.
3. Where Temporary Railing (Type K) is placed on curves and radii that are too severe to connect panels with bolted joints, the railing is to be backed continuously with earth fill. See Section F-F.
4. Where the offset distance from the exposed edge of deck to the closest edge of the temporary railing is less than 610 mm, attach each panel to deck slab with 25 mm diameter threaded rods (total four per panel) inserted through the slotted holes of the panel and bond in drilled holes 150 mm deep in the deck slabs. See "Bridge Memo to Designers" Manual.

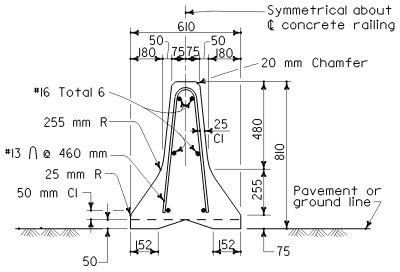

SECTION A-A

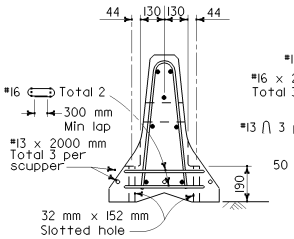

SECTION B-B

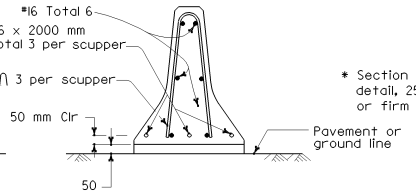

SECTION C-C

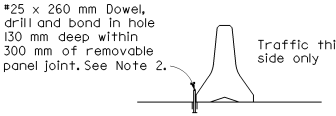

SECTION G-G *

* Section G-G is for PCC pavement. Alternative detail, 25.4 mm Ø pins 610 mm long driven in AC or firm soil permitted, minimum 460 mm deep.

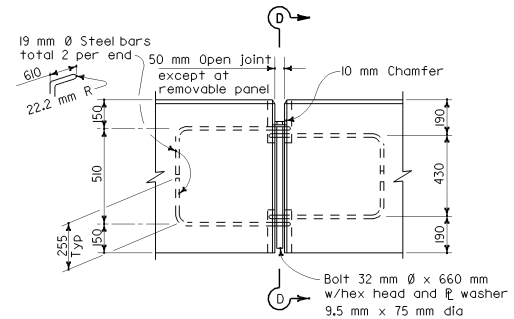

ELEVATION

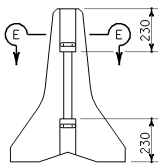

VIEW D-D

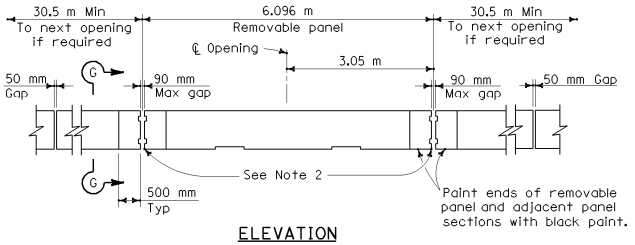

ELEVATION

TYPICAL OPENING DETAIL

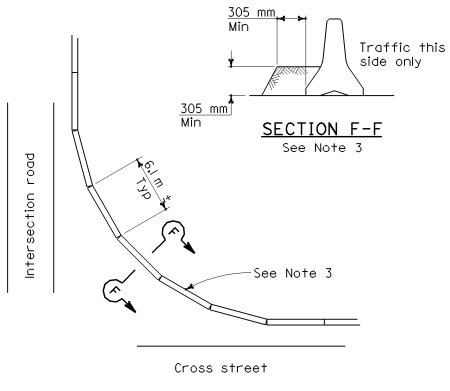

SECTION F-F

See Note 3

CURVED LAYOUT

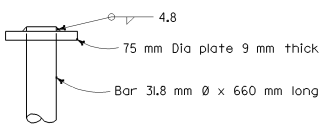

ALTERNATIVE HEAD DETAIL

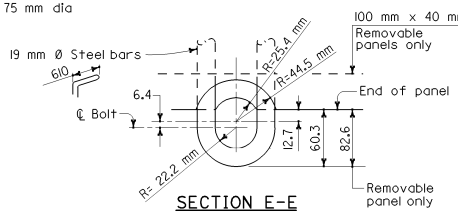

SECTION E-E

BOLT CONNECTION DETAIL

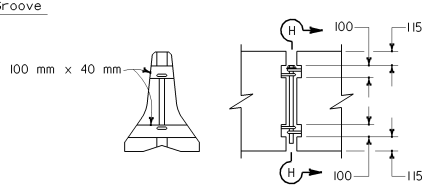

SECTION H-H ELEVATION

REMOVABLE PANEL GROOVE DETAILS

STATE OF CALIFORNIA
DEPARTMENT OF TRANSPORTATION

TEMPORARY RAILING (TYPE K)

NO SCALE

ALL DIMENSIONS ARE IN MILLIMETERS UNLESS OTHERWISE SHOWN

T3

08-09-04

Back to Table of Contents

Caltrans Metric

DIST	COUNTY	ROUTE	KILOMETER POST TOTAL PROJECT	SHEET NO.	TOTAL SHEETS

REGISTERED CIVIL ENGINEER

July 1, 2004
PLANS APPROVAL DATE

REGISTERED PROFESSIONAL ENGINEER Ellis K. Hirst No. C17926 Exp. 6-30-05 CIVIL STATE OF CALIFORNIA

The State of California or its officers or agents shall not be responsible for the accuracy or completeness of electronic copies of this plan sheet.

To get to the Caltrans web site, go to: http://www.dot.ca.gov

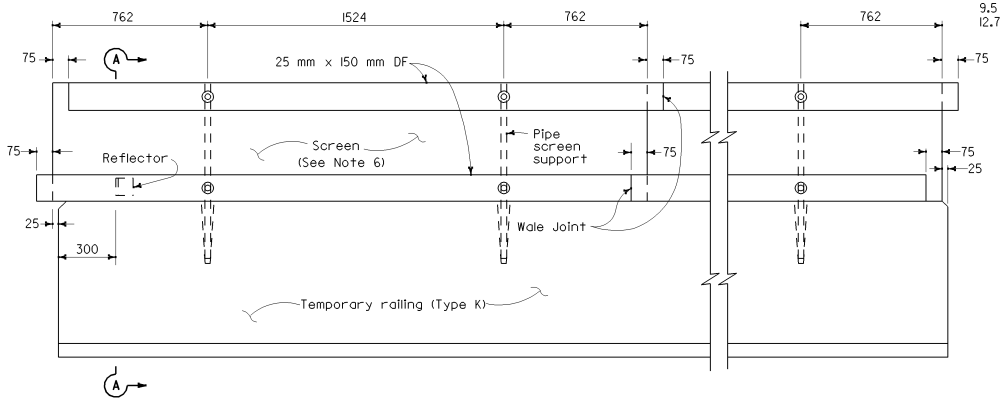

ELEVATION

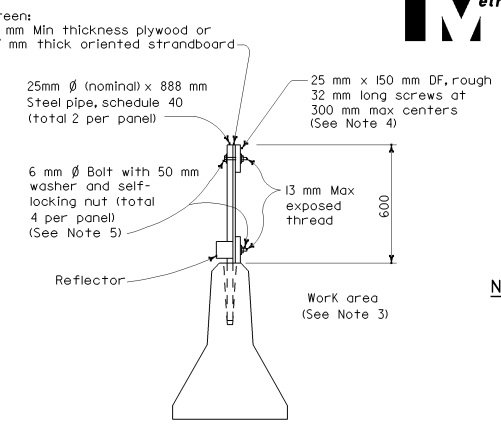

SECTION A-A

NOTE

1. Straight holes 38 mm Ø of the depth shown may be used in lieu of the tapered holes.
2. Resin capsule-type anchorage devices may be substituted for threaded rods.
3. Place screen on work area side of the temporary railing where traffic will only be on one side of the temporary railing.
4. Clinched 8d box nails may be substituted for screws. The nails shall be clinched on the work area side of the screen where traffic will only be on one side of the temporary railing.
5. U-bolts may be substituted for 6 mm Ø bolts.
6. Openings in the screen of 1.0 m length shall be provided at 60 m intervals.

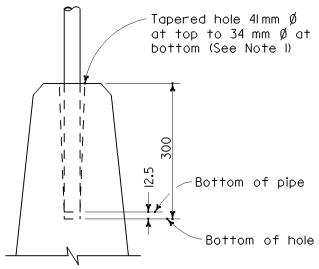

SCREEN ANCHORAGE DETAIL

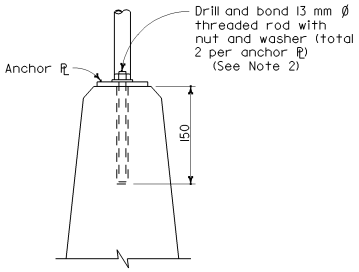

SCREEN ANCHORAGE DETAIL
ALTERNATIVE 'A'

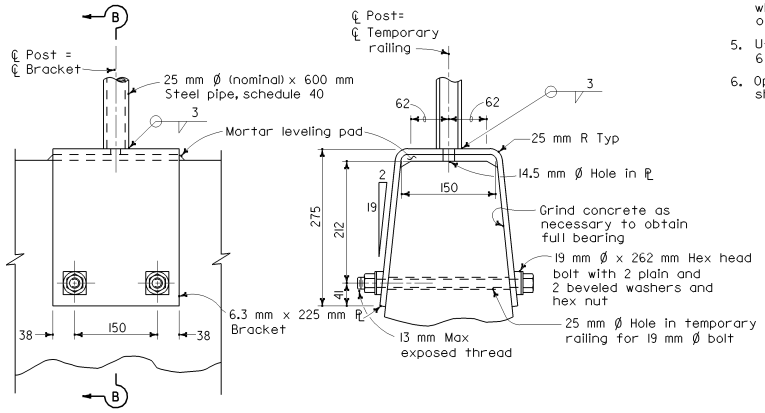

ELEVATION

SECTION B-B

SCREEN ANCHORAGE DETAIL
ALTERNATIVE 'B'

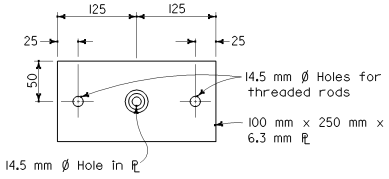

PLAN

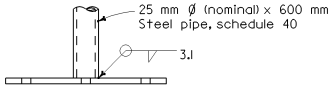

ELEVATION

ANCHOR PLATE DETAIL
ALTERNATIVE 'A'

STATE OF CALIFORNIA
DEPARTMENT OF TRANSPORTATION

TEMPORARY TRAFFIC SCREEN

NO SCALE

ALL DIMENSIONS ARE IN
MILLIMETERS UNLESS OTHERWISE SHOWN

T4

03-30-04

Back to Table of Contents

DIST	COUNTY	ROUTE	KILOMETER POST TOTAL PROJECT	SHEET NO.	TOTAL SHEETS

REGISTERED CIVIL ENGINEER

July 1, 2004
PLANS APPROVAL DATE

REGISTERED PROFESSIONAL ENGINEER Ellis K. Hirst No. C17926 Exp. 6-30-05 CIVIL STATE OF CALIFORNIA

The State of California or its officers or agents shall not be responsible for the accuracy or completeness of electronic copies of this plan sheet.

To get to the Caltrans web site, go to: http://www.dot.ca.gov

Caltrans Metric

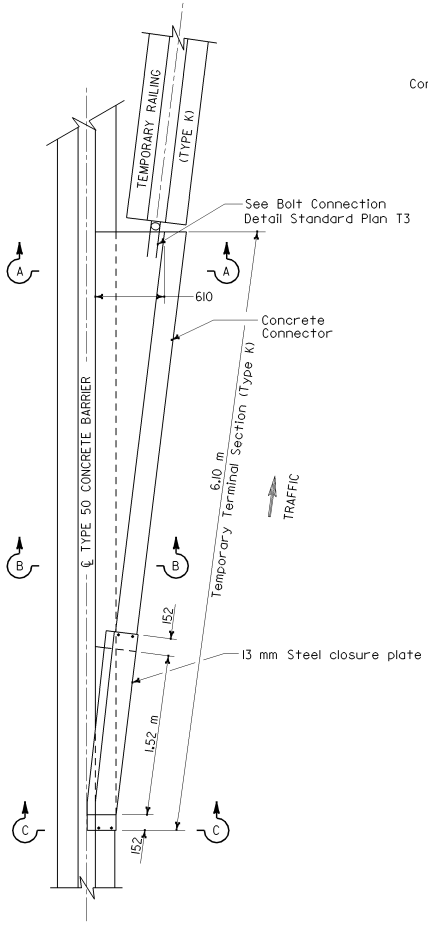

PLAN

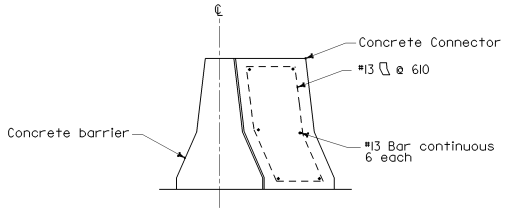

SECTION A-A

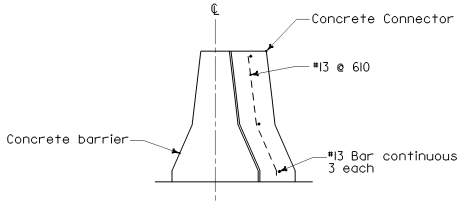

SECTION B-B

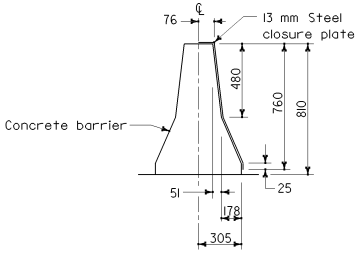

SECTION C-C

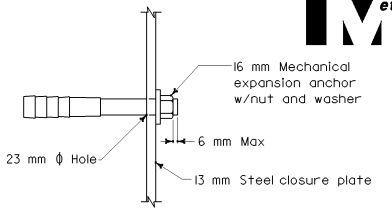

CLOSURE PLATE
ANCHOR BOLT DETAIL

NOTE

1. If lifting holes are used with the concrete connector, they shall conform to the lifting hole details shown on Standard Plan T3.
2. Paint closure plate white.
3. When the temporary terminal section (Type K) is no longer required and is to be removed, the anchor bolts connecting the closure plate and the barrier shall be removed or cut flush with the face of the concrete barrier. If the anchor bolts are removed, the resulting holes shall be filled with grout.

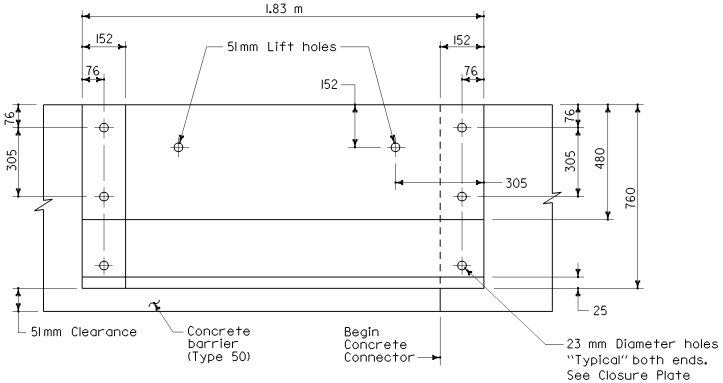

CLOSURE PLATE
(SIDE VIEW)

STATE OF CALIFORNIA
DEPARTMENT OF TRANSPORTATION

TEMPORARY TERMINAL SECTION (TYPE K)

NO SCALE

ALL DIMENSIONS ARE IN MILLIMETERS UNLESS OTHERWISE SHOWN

T5

03-30-04

Back to Table of Contents

DIST	COUNTY	ROUTE	KILOMETER POST TOTAL PROJECT	SHEET NO.	TOTAL SHEETS

Caltrans Metric

REGISTERED CIVIL ENGINEER

July 1, 2004
PLANS APPROVAL DATE

REGISTERED PROFESSIONAL ENGINEER Greg W. Edwards No. C36386 Exp. 6-30-06 CIVIL STATE OF CALIFORNIA

The State of California or its officers or agents shall not be responsible for the accuracy or completeness of electronic copies of this plan sheet.

To get to the Caltrans web site, go to: http://www.dot.ca.gov

NOTES

1. The sign messages shown for type of project and fund types are examples only. See the Special Provisions for the applicable type of project and fund type messages to be used.
2. Except as otherwise shown, the legend of sign shall be black on a white background (non-reflective).
3. The border of the signs and details "B-1" and "B-2" shall be blue (non-reflective).
4. The diamond in details "C-1" and "C-2" shall be orange (non-reflective).
5. Year of completion of project construction shown on the overlay is an example only. See the Special Provisions.

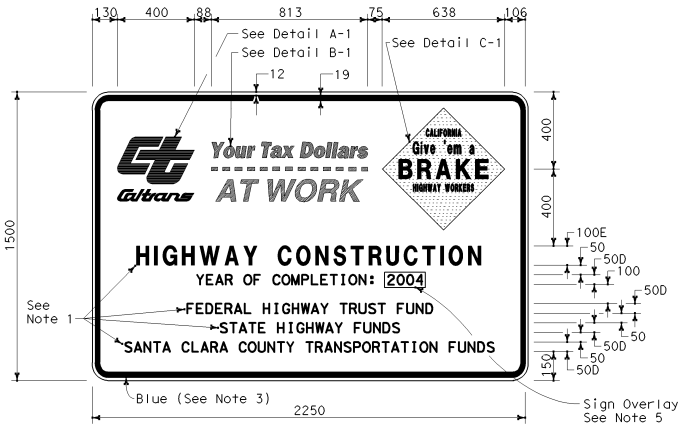

TYPE 1

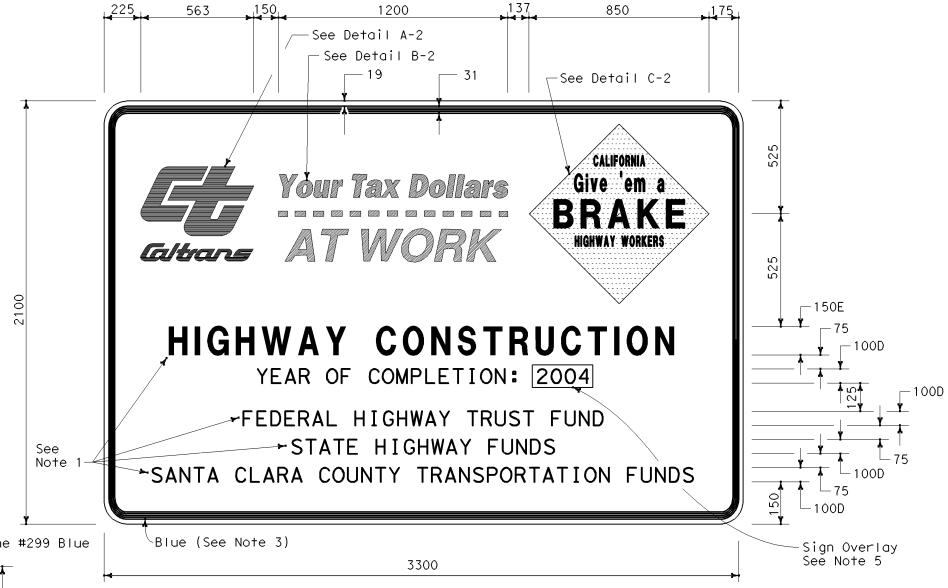

TYPE 2

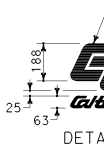

DETAIL A-1

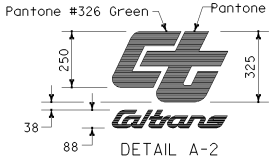

DETAIL A-2

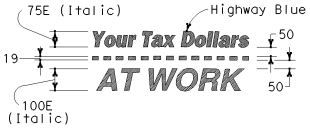

DETAIL B-1
(See Note 3)

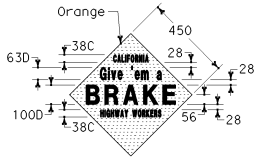

DETAIL C-1
(See Note 4)

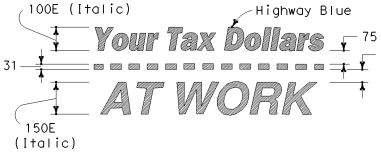

DETAIL B-2
(See Note 3)

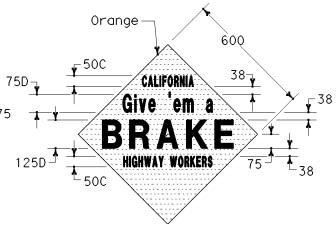

DETAIL C-2
(See Note 4)

STATE OF CALIFORNIA
DEPARTMENT OF TRANSPORTATION

CONSTRUCTION PROJECT FUNDING IDENTIFICATION SIGNS

NO SCALE

ALL DIMENSIONS ARE IN MILLIMETERS UNLESS OTHERWISE SHOWN

T7

2004 Std PLAN T7

05-12-04

Back to Table of Contents

DIST	COUNTY	ROUTE	KILOMETER POST TOTAL PROJECT	SHEET NO.	TOTAL SHEETS

Caltrans Metric

REGISTERED CIVIL ENGINEER

July 1, 2004
PLANS APPROVAL DATE

REGISTERED PROFESSIONAL ENGINEER Greg W. Edwards No. C36386 Exp. 6-30-06 CIVIL STATE OF CALIFORNIA

The State of California or its officers or agents shall not be responsible for the accuracy or completeness of electronic copies of this plan sheet.

To get to the Caltrans web site, go to: http://www.dot.ca.gov

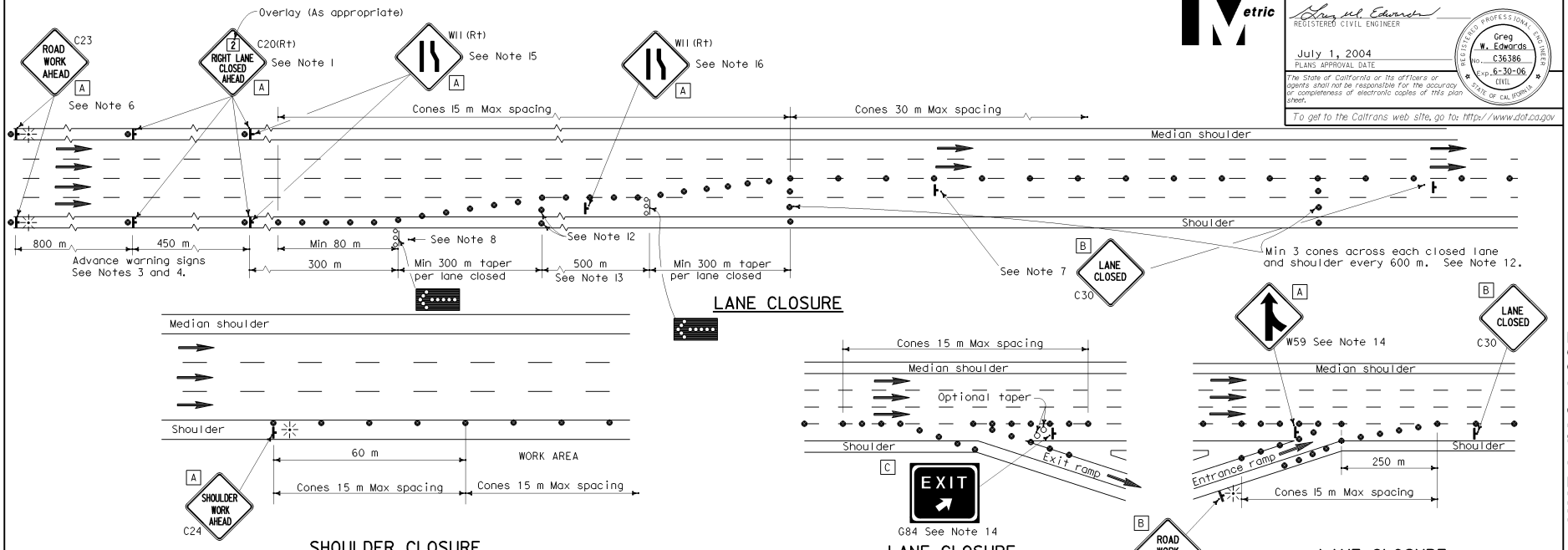

NOTES

1. Median lane closures shall conform to the details for outside lane closures except that C20 (Lt) signs shall be used.
2. At least one person shall be assigned to provide full time maintenance of traffic control devices for lane closures.
3. Duplicate sign installations are not required:
   a) On opposite shoulder if at least one-half of the available lanes remain open to traffic.
   b) In the median if the width of the median shoulder is less than 2.4 m and the outside lanes are to be closed.
4. Each advance warning sign on each side of the roadway shall be equipped with at least two flags for daytime closure. Each flag shall be at least 400 mm x 400 mm in size and shall be orange or fluorescent red-orange in color. Flashing beacons shall be placed at the locations indicated for lane closure during hours of darkness.
5. A C14 "END ROAD WORK" sign, as appropriate, shall be placed at the end of the lane closure unless the end of work area is obvious or ends within a larger project's limits.
6. If the C23 sign would follow within 600 m of a stationary C23 or C11 "ROAD WORK NEXT _____ MILES", use a C20 sign for the first advance warning sign.
7. Place a C30 sign every 600 m throughout length of lane closure.
8. One flashing arrow sign for each lane closed. The first flashing arrow sign shall be Type I. All others may be either Type I or Type II.
9. A minimum 450 m of sight distance shall be provided where possible for vehicles approaching the first flashing arrow sign. Lane closures shall not begin at top of crest vertical curve or on a horizontal curve.
10. All cones used for lane closures during the hours of darkness shall be fitted with retroreflective bands (or sleeves) as specified in the specifications.
11. Portable delineators, placed at one-half the spacing indicated for traffic cones may be used instead of cones for daytime closures only.
12. Unless otherwise specified in the special provisions, a minimum of 3 cones shall be placed transversely across each closed lane and shoulder at each location where a taper across a traffic lane ends and every 600 m as shown on the "Lane Closure" detail. Two Type II barricades may be used instead of the 3 cones. The transverse alignment of the cones or barricades on the closed shoulder may be shifted from the transverse alignment to provide access to the work.
13. Unless otherwise specified in the special provisions, the 500 m tangent shown along lane lines shall be used between the 300 m tapers required for each closed traffic lane.
14. Unless otherwise specified in the special provisions, the G84 and W59 signs shall be used as shown.
15. When specified in the special provisions, a W11 "LANE ENDS" symbol sign is to be used in place of the C20 "RIGHT LANE CLOSED AHEAD" sign.
16. The W11 "LANE ENDS" symbol sign shown at this location is to be used where the W11 sign is used as advance warning as described in Note 15.

SIGN PANEL SIZE (Min)

A	1219 mm x 1219 mm
B	762 mm x 762 mm
C	1372 mm x 1219 mm

LEGEND

- Traffic Cone
- Traffic Cone (optional taper)
- Portable Sign
- Flashing Arrow Sign (FAS)
- FAS SUPPORT OR TRAILER
- Direction of Travel
- Portable Flashing Beacon

STATE OF CALIFORNIA
DEPARTMENT OF TRANSPORTATION

TRAFFIC CONTROL SYSTEM FOR LANE CLOSURE ON FREEWAYS AND EXPRESSWAYS

NO SCALE

ALL DIMENSIONS ARE IN MILLIMETERS UNLESS OTHERWISE SHOWN

T10

08-09-04

2004 Std PLAN T10

Back to Table of Contents

DIST	COUNTY	ROUTE	KILOMETER POST TOTAL PROJECT	SHEET NO.	TOTAL SHEETS

REGISTERED CIVIL ENGINEER

July 1, 2004
PLANS APPROVAL DATE

REGISTERED PROFESSIONAL ENGINEER G.W. Edwards No. C36386 Exp. 6-30-06 CIVIL STATE OF CALIFORNIA

The State of California or its officers or agents shall not be responsible for the accuracy or completeness of electronic copies of this plan sheet.

To get to the Caltrans web site, go to: http://www.dot.ca.gov

Caltrans Metric

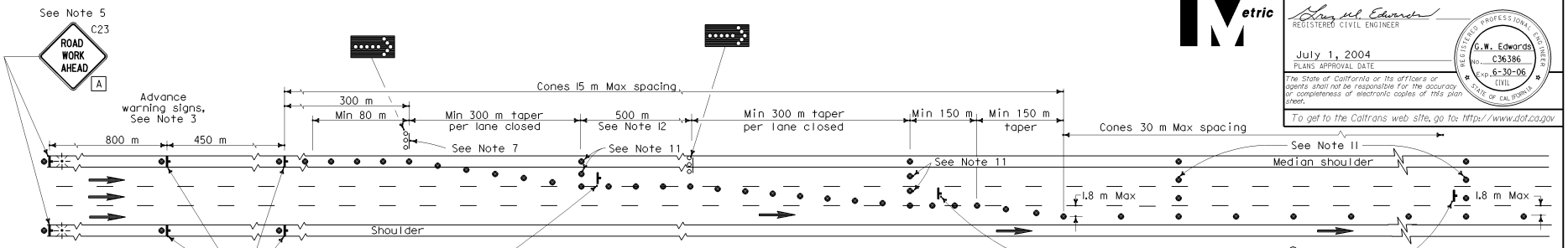

LANE CLOSURE WITH PARTIAL SHOULDER USE

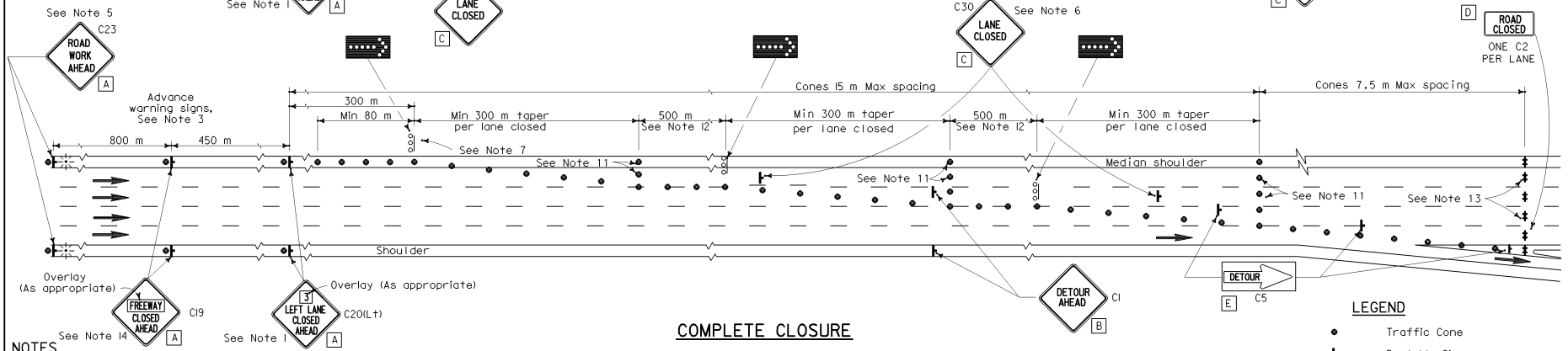

COMPLETE CLOSURE

NOTES

1. Lane closures on the right side using partial median shoulder as a traffic lane shall conform to the details for inside lane closure except that C20 (Rt) signs shall be used.
2. At least one person shall be assigned to provide full time maintenance of traffic control devices for lane closures.
3. Each advance warning sign on each side of the roadway shall be equipped with at least two flags for daytime closure. Each flag shall be at least 400 mm x 400 mm in size and shall be orange or fluorescent red-orange in color. Flashing beacons shall be placed at the locations indicated for lane closure during hours of darkness.
4. A C14 "END ROAD WORK" sign, as appropriate, shall be placed at the end of the lane closure unless the end of work area is obvious or ends within a larger project's limits.
5. If the C23 sign would follow within 600 m of a stationary C23 or C11 "ROAD WORK NEXT ___ MILES", use a C20 sign for the first advance warning sign.
6. Place a C30 sign every 600 m throughout length of lane closure.
7. One flashing arrow sign for each lane closed. The first flashing arrow sign shall be Type I. All others may be either Type I or Type II.
8. A minimum 450 m of sight distance shall be provided where possible for vehicles approaching the first flashing arrow sign. Lane closures shall not begin at the top of crest vertical curve or on a horizontal curve.
9. All cones used for lane closures during the hours of darkness shall be fitted with retroreflective bands (or sleeves) as specified in the specifications.
10. Portable delineators, placed at one-half the spacing indicated for traffic cones, may be used instead of cones for daytime closures only.
11. Unless otherwise specified in the special provisions, a minimum of 3 cones shall be placed transversely across each closed lane and shoulder at each location where a taper across a traffic lane ends and every 600 m as shown on the "Lane Closure With Partial Shoulder Use" detail. Two Type II barricades may be used instead of the 3 cones. The transverse alignment of the cones or barricades on the closed shoulder may be shifted from the transverse alignment to provide access to the work.
12. Unless otherwise specified in the special provisions, the 500 m tangent shown along lane lines shall be used between the 300 m tapers required for each closed traffic lane.
13. A minimum of Two Type II barricades shall be placed across each closed lane and shoulder at the location shown and every 600 m within the complete closure area. Within the complete closure area, the transverse alignment of the barricades on the closed shoulder may be shifted from the transverse alignment to provide access to the work.
14. When specified in the special provisions, a C1 "DETOUR AHEAD" sign is to be used in place of the C19 "FREEWAY CLOSED AHEAD" sign.

SIGN PANEL SIZE (Min)

A	1219 mm x 1219 mm
B	914 mm x 914 mm
C	762 mm x 762 mm
D	1219 mm x 762 mm
E	1219 mm x 457 mm

LEGEND

- Traffic Cone
- Portable Sign
- Barricade
- Flashing Arrow Sign (FAS)
- FAS Support or Trailer
- Direction of Travel
- Portable Flashing Beacon

STATE OF CALIFORNIA
DEPARTMENT OF TRANSPORTATION

TRAFFIC CONTROL SYSTEM FOR LANE AND COMPLETE CLOSURES ON FREEWAYS AND EXPRESSWAYS

NO SCALE

ALL DIMENSIONS ARE IN MILLIMETERS UNLESS OTHERWISE SHOWN

T10A

2004 Std PLAN T10A

08-09-04

Back to Table of Contents

DIST	COUNTY	ROUTE	KILOMETER POST TOTAL PROJECT	SHEET NO.	TOTAL SHEETS

REGISTERED CIVIL ENGINEER

July 1, 2004
PLANS APPROVAL DATE

REGISTERED PROFESSIONAL ENGINEER Greg W. Edwards No. C36386 Exp. 6-30-06 CIVIL STATE OF CALIFORNIA

The State of California or its officers or agents shall not be responsible for the accuracy or completeness of electronic copies of this plan sheet.

To get to the Caltrans web site, go to: http://www.dot.ca.gov

Caltrans Metric

TYPICAL LANE CLOSURE

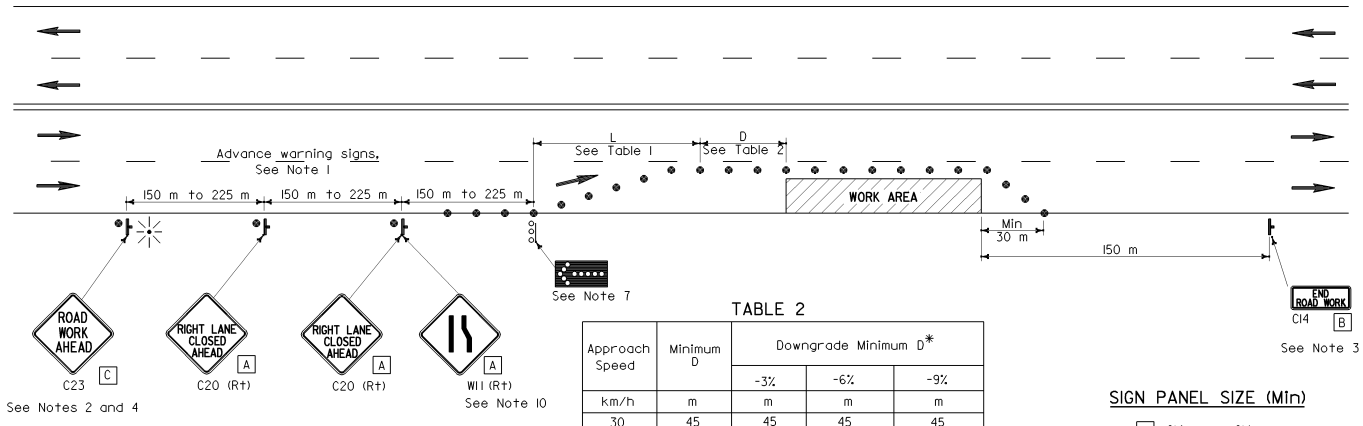

TABLE 2

Approach Speed	Minimum D	Downgrade Minimum D*		
		-3%	-6%	-9%
km/h	m	m	m	m
30	45	45	45	45
40	45	50	50	53
50	45	66	70	74
60	45	87	92	97
70	65	110	116	124
80	85	136	144	154

* Use on sustained downgrade steeper than or equal to grades shown and longer than 1.6 km.

SIGN PANEL SIZE (Min)

- A 914 mm x 914 mm
- B 914 mm x 457 mm
- C 762 mm x 762 mm

LEGEND

- Traffic Cone
- Portable Sign
- Direction of Travel
- Flashing Arrow Sign (FAS)
- FAS Support or Trailer
- Portable Flashing Beacon

NOTES

1. Where approach speeds are low, advance warning signs may be placed at 90 m spacing and placed closer in urban areas.
2. Each advance warning sign shall be equipped with at least two flags for daytime closure. Each flag shall be at least 400 mm x 400 mm in size and shall be orange or fluorescent red-orange in color. Flashing beacons shall be placed at the locations indicated for lane closure during hours of darkness.
3. A C14 "END ROAD WORK" sign, as appropriate, shall be placed at the end of the lane closure unless the end of work area is obvious, or ends within a larger project's limits.
4. If the C23 sign would follow within 600 m of a stationary C23 or C11 "ROAD WORK NEXT _____ MILES", use a C20 sign for the first advance warning sign.
5. All cones used for lane closures during the hours of darkness shall be fitted with retroreflective bands (or sleeves) as specified in the specifications.
6. Portable delineators, placed at one-half the spacing indicated for traffic cones, may be used instead of cones for daytime closures only.
7. Flashing arrow sign shall be either Type I or Type II.
8. The maximum spacing between cones along a tangent shall be 15 m and along a taper shall be approximately as shown in Table 1.
9. For approach speeds over 80 km/h, use the "Traffic Control System for Lane Closure On Freeways And Expressways" plan for lane closure details and requirements.
10. When specified in the special provisions, a W11 "LANE ENDS" symbol sign is to be used in place of the C20 "RIGHT LANE CLOSED AHEAD" sign.

TABLE 1

Approach Speed	* Minimum L	** Max spacing of cones along taper
km/h	m	m
30	38	6
40	38	8
50	98	10
60	98	12
70	183	14
80	183	15
Over 80	See Note 9	

* Use L for lane widths less than or equal to 3.6 m.

** See Note 8

STATE OF CALIFORNIA
DEPARTMENT OF TRANSPORTATION

TRAFFIC CONTROL SYSTEM FOR LANE CLOSURE ON MULTILANE CONVENTIONAL HIGHWAYS

NO SCALE

ALL DIMENSIONS ARE IN MILLIMETERS UNLESS OTHERWISE SHOWN

T11

2004 Std PLAN T11

05-07-04

Back to Table of Contents

DIST	COUNTY	ROUTE	KILOMETER POST TOTAL PROJECT	SHEET NO.	TOTAL SHEETS

REGISTERED CIVIL ENGINEER

July 1, 2004
PLANS APPROVAL DATE

REGISTERED PROFESSIONAL ENGINEER Greg W. Edwards No. C36386 Exp. 6-30-06 CIVIL STATE OF CALIFORNIA

The State of California or its officers or agents shall not be responsible for the accuracy or completeness of electronic copies of this plan sheet.

To get to the Caltrans web site, go to: http://www.dot.ca.gov

Caltrans Metric

LEGEND

- Traffic Cone
- Portable Sign
- Direction of Travel
- Flashing Arrow Sign (FAS)
- FAS Support or Trailer
- Portable Flashing Beacon

TABLE 1

Approach Speed	* Minimum L	** Max spacing of cones along taper
km/h	m	m
30	38	6
40	38	8
50	98	10
60	98	12
70	183	14
80	183	15
Over 80	See Note 11	

* Use L for lane widths less than or equal to 3.6 m.

** See Note 10

TABLE 2

Approach Speed	Minimum D	Downgrade Minimum D*		
		-3%	-6%	-9%
km/h	m	m	m	m
30	45	45	45	45
40	45	50	50	53
50	45	66	70	74
60	45	87	92	97
70	65	110	116	124
80	85	136	144	154

* Use on sustained downgrade steeper than or equal to grades shown and longer than 1.6 km.

TYPICAL CLOSING OF HALF ROADWAY

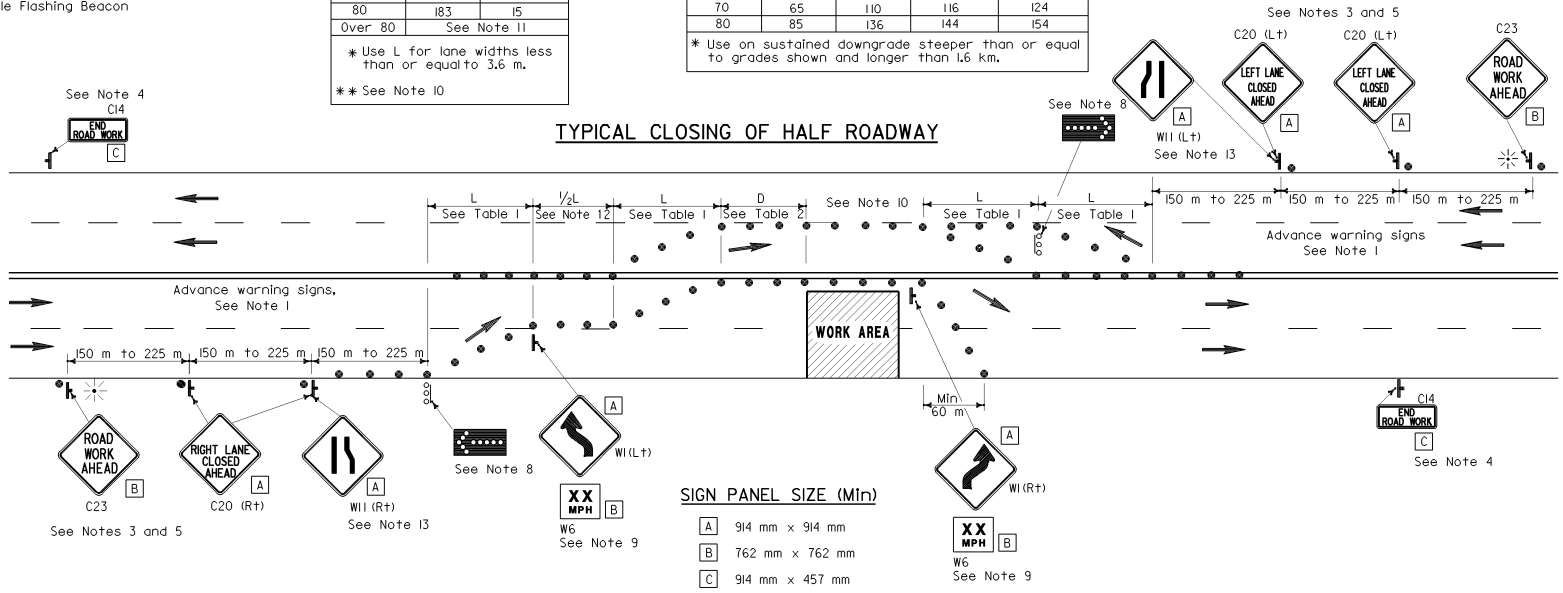

SIGN PANEL SIZE (Min)

- A 914 mm x 914 mm
- B 762 mm x 762 mm
- C 914 mm x 457 mm

NOTES

1. Where Approach speeds are low, advance warning signs may be placed at 90 m spacing and placed closer in urban areas.
2. At least one person shall be assigned to provide full time maintenance of traffic control devices for lane closure unless, otherwise directed by the Engineer.
3. Each advance warning sign in each direction of travel shall be equipped with at least two flags for daytime closure. Each flag shall be at least 400 mm x 400 mm in size and shall be orange or fluorescent red-orange in color. Flashing beacons shall be placed at the locations indicated for lane closure during hours of darkness.
4. A C14 "END ROAD WORK" sign, as appropriate, shall be placed at the end of the lane closure unless the end of work area is obvious, or ends within a larger project's limits.
5. If the C23 sign would follow within 600 m of a stationary C23 or C11 "ROAD WORK NEXT _____ MILES", use a C20 sign for the first advance warning sign.
6. All cones used for lane closures during the hours of darkness shall be fitted with retroreflective bands (or sleeves) as specified in the specifications.
7. Portable delineators, placed at one-half the spacing indicated for traffic cones, may be used instead of cones for daytime closures only.
8. Flashing arrow signs shall be either Type I or Type II.
9. Advisory speed will be determined by the Engineer. The W6 Sign will not be required when advisory speed is more than the posted or maximum speed limit.
10. The maximum spacing between cones along a tangent shall be 15 m and along a taper shall be approximately as shown in Table 1.
11. For approach speeds over 80 km/h, use the "Traffic Control System For Lane Closure On Freeways And Expressways" plan for lane closure details and requirements.
12. Unless otherwise specified in the special provisions, the (½ L) shown between the two (L) lane closure tapers shall be used.
13. When specified in the special provisions, a W11 "Lane Ends" symbol sign is to be used in place of the C20 "RIGHT (LEFT) LANE CLOSED AHEAD" sign.

STATE OF CALIFORNIA
DEPARTMENT OF TRANSPORTATION

TRAFFIC CONTROL SYSTEM FOR LANE CLOSURE ON MULTILANE CONVENTIONAL HIGHWAYS

NO SCALE

ALL DIMENSIONS ARE IN MILLIMETERS UNLESS OTHERWISE SHOWN

T12

08-11-04

2004 Std PLAN T12

Back to Table of Contents

DIST	COUNTY	ROUTE	KILOMETER POST TOTAL PROJECT	SHEET NO.	TOTAL SHEETS

Caltrans Metric

REGISTERED CIVIL ENGINEER

July 1, 2004
PLANS APPROVAL DATE

REGISTERED PROFESSIONAL ENGINEER G.W. Edwards No. C36386 Exp. 6-30-06 CIVIL STATE OF CALIFORNIA

The State of California or its officers or agents shall not be responsible for the accuracy or completeness of electronic copies of this plan sheet.

To get to the Caltrans web site, go to: http://www.dot.ca.gov

TYPICAL LANE CLOSURE WITH REVERSIBLE CONTROL

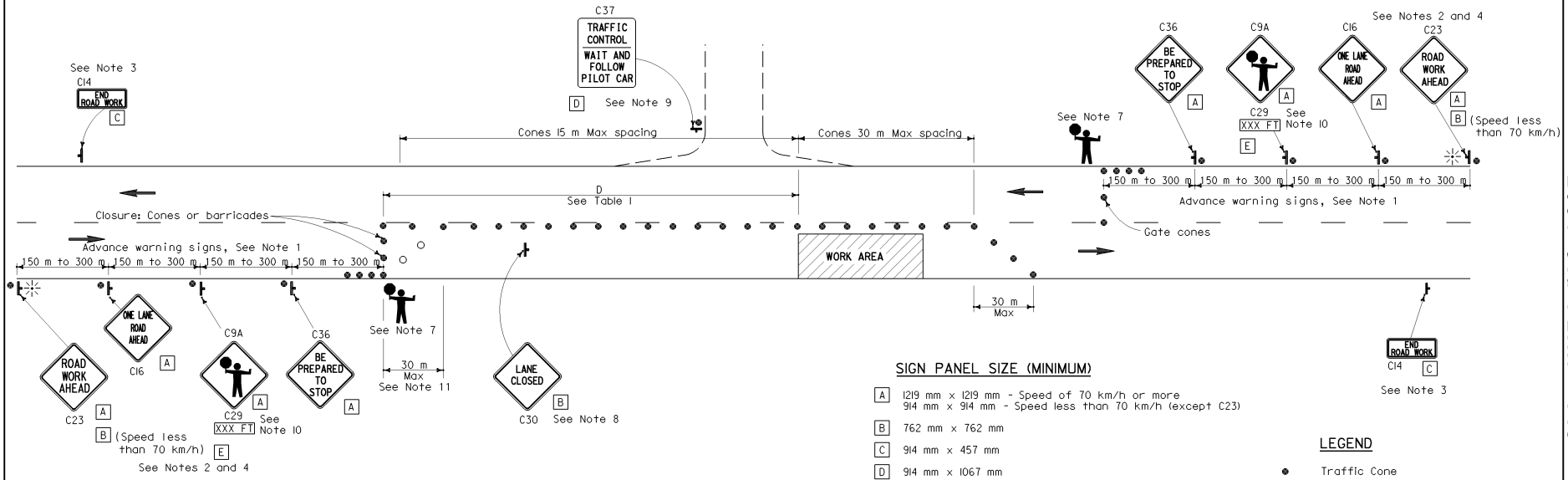

SIGN PANEL SIZE (MINIMUM)

- A 1219 mm x 1219 mm - Speed of 70 km/h or more
  914 mm x 914 mm - Speed less than 70 km/h (except C23)
- B 762 mm x 762 mm
- C 914 mm x 457 mm
- D 914 mm x 1067 mm
- E 914 mm x 229 mm

TABLE 1

Approach Speed	Minimum D	Downgrade Minimum D *
km/h	m	m
30	60	72
40	60	72
50	60	72
60	90	108
70	90	108
80	150	180
90	150	180
100	150	180
110	170	204

* Use on substained downgrade steeper than -3 percent and longer than 1.6 km.

LEGEND

- Traffic Cone
- Traffic Cone (optional taper)
- Portable Sign
- Direction of Travel
- Portable Flashing Beacon
- Flagger

NOTES

1. Where approach speeds are low, advance warning signs may be placed at 90 m spacing, and closer in urban areas.
2. Each advance warning sign in each direction of travel shall be equipped with at least two flags for daytime closure. Each flag shall be at least 400 mm x 400 mm in size and shall be orange or fluorescent red-orange in color. Flashing beacons shall be placed at the locations indicated for lane closure during hours of darkness.
3. A C14 "END ROAD WORK" sign, as appropriate, shall be placed at the end of the lane control unless the end of work area is obvious, or ends within a larger project's limits.
4. If the C23 sign would follow within 600 m of a stationary C23 or C11 "ROAD WORK NEXT_____ MILES", use a C16 sign for the first advance warning sign.
5. All cones used for lane closures during the hours of darkness shall be fitted with retroreflective bands (or sleeves) as specified in the specifications.
6. Portable delineators, placed at one-half the spacing indicated for traffic cones, may be used instead of cones for daytime closures only.
7. Additional advance flaggers may be required. Flagger should stand in a conspicuous place, be visible to approaching traffic as well as approaching vehicles after the first vehicle has stopped. During the hours of darkness, the flagging-station and flagger shall be illuminated and clearly visible to approaching traffic. The illumination footprint of the lighting on the ground shall be at least 6 m in diameter. Place a minimum of four cones at 15 m intervals in advance of flagger station as shown.
8. Place C30 "LANE CLOSED" sign at 150 to 300 m intervals throughout extended work areas. They are optional if the work area is visible from the flagger station.
9. When a pilot car is used, place a C37 "TRAFFIC CONTROL-WAIT AND FOLLOW PILOT CAR" sign at all intersections within traffic control area. Signs shall be clean and visible at all times.
10. An optional C29 sign may be placed below the C9A sign.
11. Traffic cones or barricades may be placed on the optional taper as shown, barricades shall be Type I, II, or III.

STATE OF CALIFORNIA
DEPARTMENT OF TRANSPORTATION

TRAFFIC CONTROL SYSTEM FOR LANE CLOSURE ON TWO LANE CONVENTIONAL HIGHWAYS

NO SCALE

ALL DIMENSIONS ARE IN MILLIMETERS UNLESS OTHERWISE SHOWN

T13

05-07-04

Back to Table of Contents

TYPICAL RAMP CLOSURES

LEGEND

- Traffic Cone
- Sign
- Barricades
- Direction of Travel
- Turn Arrow

SIGN PANEL SIZE (Min)

A	1219 mm x 1219 mm
B	1219 mm x 762 mm
C	762 mm x 762 mm
D	914 mm x 914 mm
E	914 mm x 610 mm
F	1219 mm x 914 mm

Caltrans Metric

DIST	COUNTY	ROUTE	KILOMETER POST TOTAL PROJECT	SHEET NO.	TOTAL SHEETS

REGISTERED CIVIL ENGINEER

July 1, 2004
PLANS APPROVAL DATE

REGISTERED PROFESSIONAL ENGINEER Greg W. Edwards No. C36386 Exp. 6-30-06 CIVIL STATE OF CALIFORNIA

The State of California or its officers or agents shall not be responsible for the accuracy or completeness of electronic copies of this plan sheet.

To get to the Caltrans web site, go to: http://www.dot.ca.gov

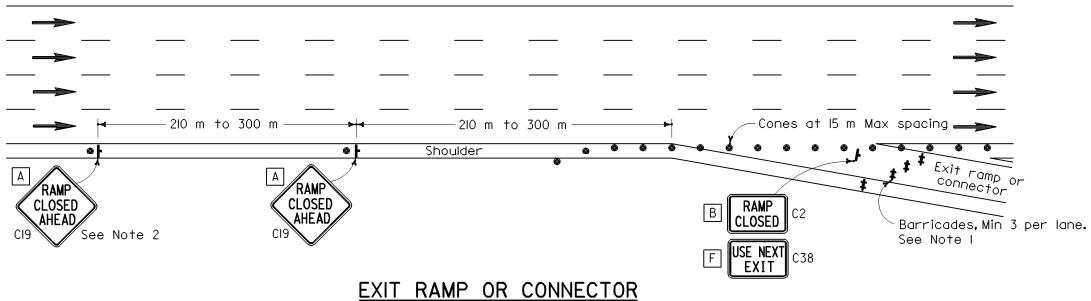

EXIT RAMP OR CONNECTOR

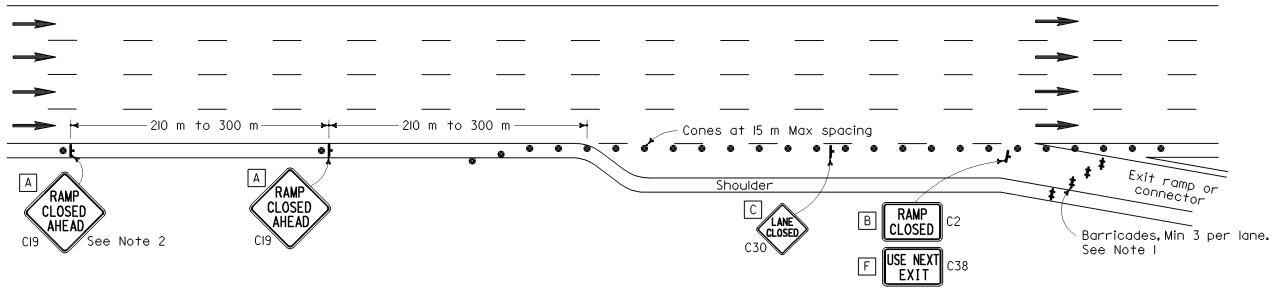

EXIT RAMP OR CONNECTOR WITH ADDITIONAL LANE

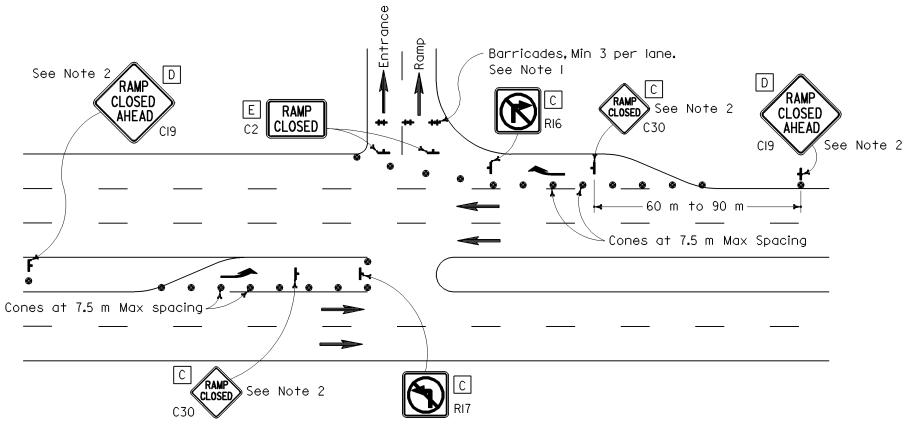

ENTRANCE RAMP WITH TURNING POCKETS

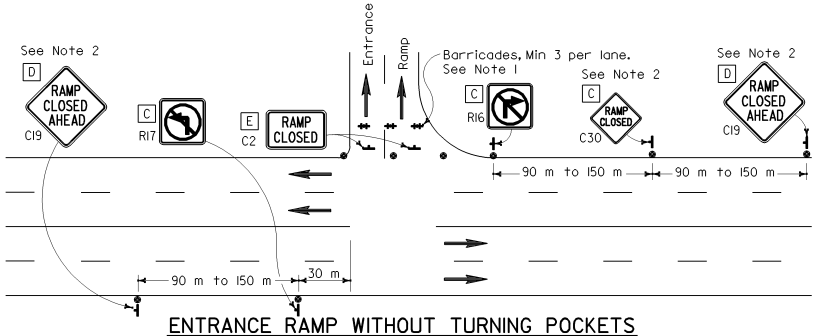

ENTRANCE RAMP WITHOUT TURNING POCKETS

NOTES

1. Barricades shall be Type I, II, or III for closures lasting one week or less and Type III for closures lasting longer than one week.
2. Instead of placing the C19 "RAMP CLOSED AHEAD" and C30 "RAMP CLOSED" signs, black on orange overlay plates with the word "CLOSED" may be mounted, as directed by the Engineer, on all guide signs that refer to the closed ramp. The letter size on the overlay shall be the same as the guide sign.
3. Each advance C19 "RAMP CLOSED AHEAD" sign shall be equipped with at least two flags for daytime closure. Each flag shall be at least 400 mm x 400 mm in size and shall be orange or fluorescent red-orange in color.
4. All cones used for ramp closures during the hours of darkness shall be fitted with retroreflective bands (or sleeves) as specified in the specifications.
5. Portable delineators, placed at one-half the spacing indicated for traffic cones, may be used instead of cones for daytime ramp closures only.
6. At least one person shall be assigned to provide full time maintenance of traffic control devices, unless otherwise directed by the Engineer
7. The existing "EXIT" sign in the gore area shall be covered during ramp closures.

STATE OF CALIFORNIA
DEPARTMENT OF TRANSPORTATION

TRAFFIC CONTROL SYSTEM FOR RAMP CLOSURE

NO SCALE

ALL DIMENSIONS ARE IN MILLIMETERS UNLESS OTHERWISE SHOWN

T14

08-09-04

2004 Std PLAN T14

Back to Table of Contents

DIST	COUNTY	ROUTE	KILOMETER POST TOTAL PROJECT	SHEET NO.	TOTAL SHEETS

REGISTERED CIVIL ENGINEER

July 1, 2004
PLANS APPROVAL DATE

REGISTERED PROFESSIONAL ENGINEER Greg W. Edwards No. C36386 Exp. 6-30-06 CIVIL STATE OF CALIFORNIA

The State of California or its officers or agents shall not be responsible for the accuracy or completeness of electronic copies of this plan sheet.

To get to the Caltrans web site, go to: http://www.dot.ca.gov

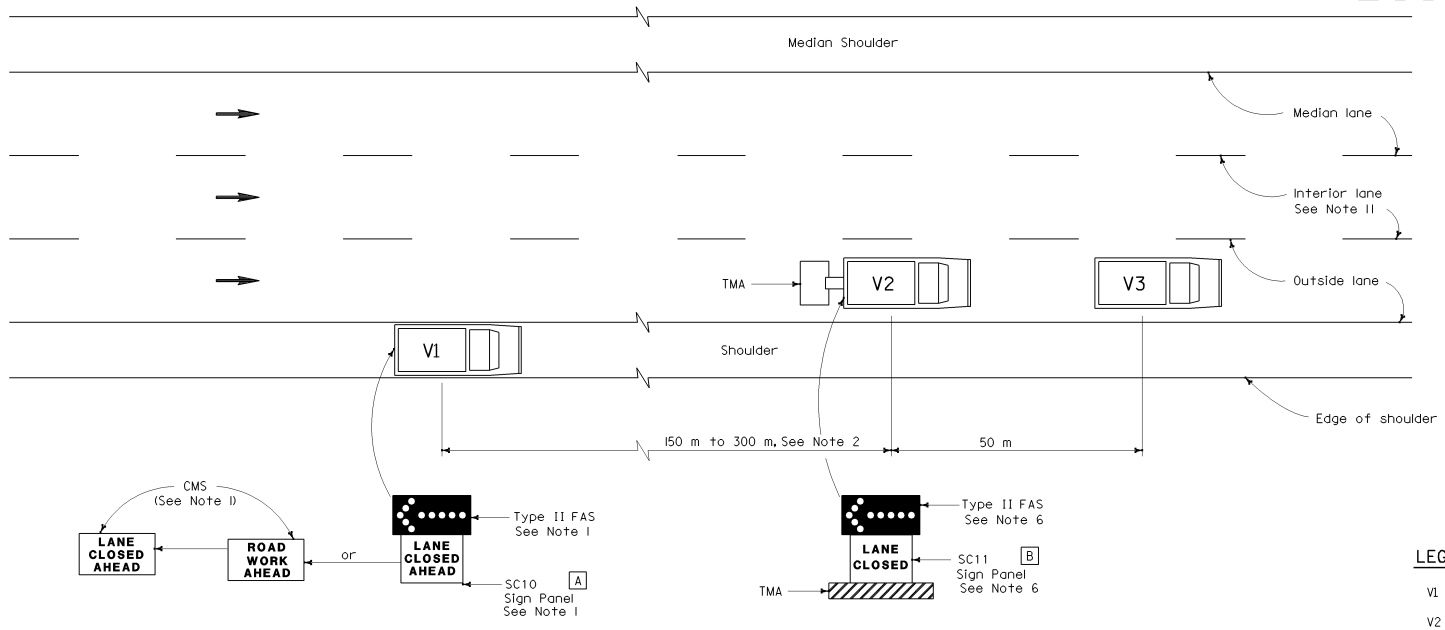

MOVING LANE CLOSURE ON MEDIAN OR OUTSIDE LANE OF MULTILANE HIGHWAYS

SIGN PANEL SIZE (Min)

A 1676 mm x 914 mm

B 1372 mm x 1067 mm

LEGEND

V1	Sign Vehicle
V2	Shadow Vehicle
V3	Work/Application Vehicle
	Flashing Arrow Sign (FAS)
CMS	Changeable Message Sign
TMA	Truck-Mounted Attenuator
→	Direction of Travel

NOTES

1. Either a changeable message sign or a SC10 sign panel and a Type II flashing arrow sign shall be mounted on the rear of sign vehicle V1. A Type II flashing arrow sign shall be mounted on the rear of sign vehicle V1 and used with the SC10 sign panel. A Type II flashing arrow sign will not be required with the changeable message sign provided the flashing arrow sign symbol is displayed on the changeable message sign board. The changeable message sign shall be sequenced to show the "ROAD WORK AHEAD" message first, followed by the "LANE CLOSED AHEAD" message and then the flashing arrow sign symbol. For median lane closure, the flashing arrow symbol shall be reversed with the arrowhead on the right.
2. If traffic queues develop, sign vehicle V1 should be positioned upstream from the end of queue. Sign vehicle V1 shall be positioned where highly visible when shoulders are not available.
3. A minimum sight distance of 450 m should be provided in advance of sign vehicle V1.
4. Sign vehicle V1 should remain at the beginning of horizontal or vertical curves until the other vehicles (V2 and V3) are far enough beyond the curve to resume the minimum sight distance of 450 m.
5. Vehicle-mounted sign panels shall be Type III, IV, VII, VIII or IX retroreflective sheeting, black on white, black on orange, or black on fluorescent orange, with 150 mm minimum series D letters per Caltrans sign specifications.
6. Gross Vehicle Weight of shadow vehicle V2 shall be a minimum of 9000 kilograms and shall be equipped with a truck-mounted attenuator. The sign panel shown and a Type II flashing arrow sign shall be mounted on the rear of shadow vehicle V2. For median lane closure the flashing arrow sign symbol shall be displayed with the arrowhead on the right.
7. All vehicles used for lane closures shall be equipped with two-way radios, and the vehicle operators shall maintain communication during the work or application operation.
8. All vehicles shall be equipped with flashing or rotating amber lights.
9. Where sufficient shoulder width is not available, sign vehicle V1 may encroach into the traffic lane staying as close to the edge of shoulder as practicable. Both V1 and V2 shall be equipped with a truck-mounted attenuator. The Gross Vehicle Weight of V1 and V2 shall be at least 9000 kg, respectively.
10. Where workers would be on foot in the work area, a stationary type lane closure (Standard Plan T10, T11, etc., as applicable) shall be used instead of this plan.
11. For moving lane closure on interior lane of multilane highways, see Standard Plan T16.
12. When multiple work vehicles are used in close proximity to each other, only one shadow vehicle is required, and spacing between work vehicles shall be minimized in order to deter traffic from entering the closed lane.

STATE OF CALIFORNIA
DEPARTMENT OF TRANSPORTATION

TRAFFIC CONTROL SYSTEM FOR MOVING LANE CLOSURE ON MULTILANE HIGHWAYS

NO SCALE

ALL DIMENSIONS ARE IN MILLIMETERS UNLESS OTHERWISE SHOWN

T15

05-07-04

Back to Table of Contents

DIST	COUNTY	ROUTE	KILOMETER POST TOTAL PROJECT	SHEET NO.	TOTAL SHEETS

REGISTERED CIVIL ENGINEER

July 1, 2004
PLANS APPROVAL DATE

REGISTERED PROFESSIONAL ENGINEER G.W. Edwards No. C36386 Exp. 6-30-06 CIVIL STATE OF CALIFORNIA

The State of California or its officers or agents shall not be responsible for the accuracy or completeness of electronic copies of this plan sheet.

To get to the Caltrans web site, go to: http://www.dot.ca.gov

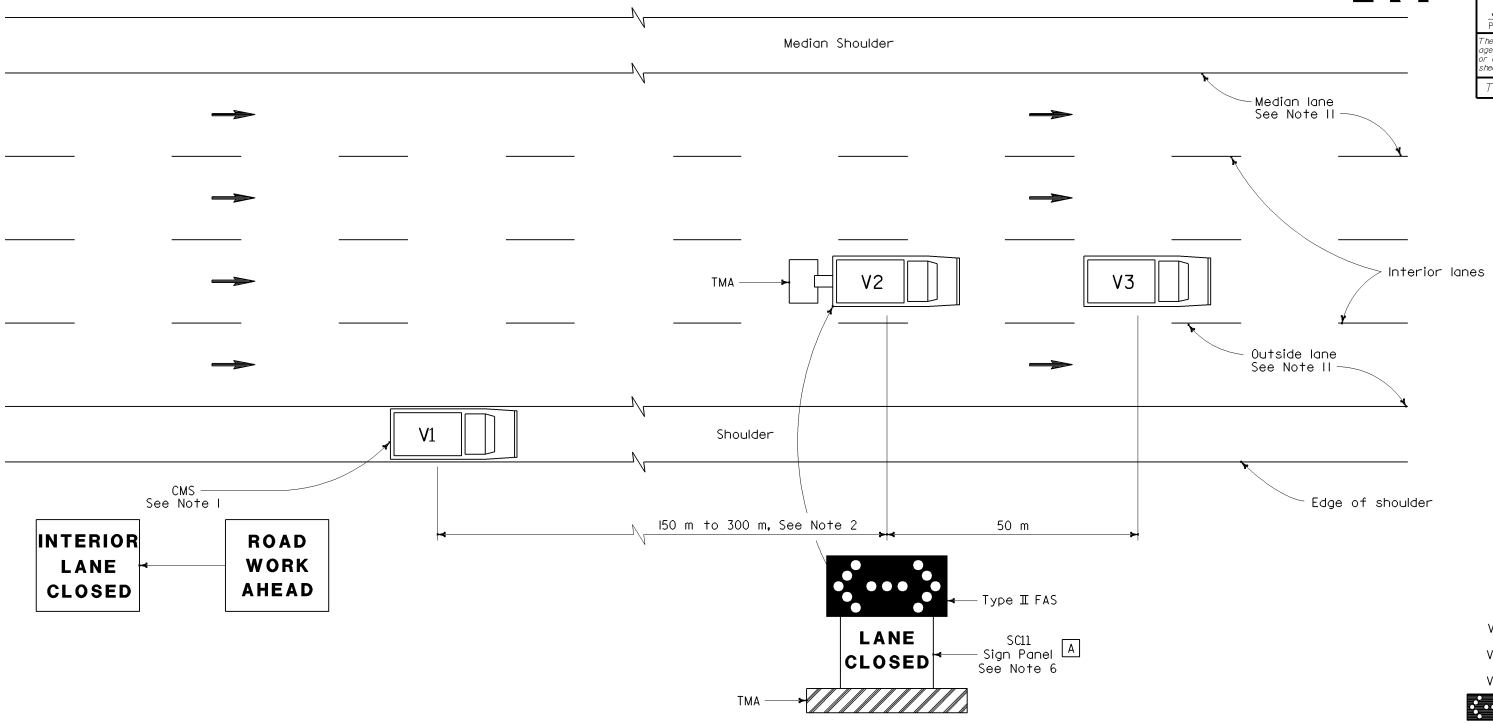

SIGN PANEL SIZE (Min)

A 1372 mm x 1067 mm

LEGEND

V1	Sign Vehicle
V2	Shadow Vehicle
V3	Work/Application Vehicle
	Flashing Arrow Sign (FAS) in flashing double arrow mode
CMS	Changeable Message Sign
TMA	Truck-Mounted Attenuator
←	Direction of Travel

MOVING LANE CLOSURE ON INTERIOR LANE OF MULTILANE HIGHWAYS

NOTES

1. A changeable message sign shall be mounted on the rear of sign vehicle V1. The changeable message sign shall be sequenced to show the "ROAD WORK AHEAD" message first, followed by the "INTERIOR LANE CLOSED" message. The message "CENTER LANE CLOSED" may be used in place of the "INTERIOR LANE CLOSED" message.
2. If traffic queues develop, sign vehicle V1 should be positioned upstream from the end of queue. Sign vehicle V1 shall be positioned where highly visible when shoulders are not available.
3. A minimum sight distance of 450 m should be provided in advance of sign vehicle V1.
4. Sign vehicle V1 should remain at the beginning of horizontal or vertical curves until the other vehicles (V2 and V3) are far enough beyond the curve to resume the minimum sight distance of 450 m.
5. Vehicle-mounted sign panels shall be Type III, IV, VII, VIII, or IX retroreflective sheeting, black on white, black on orange, or black on fluorescent orange, with 150 mm minimum series D letters per Caltrans sign specifications.
6. Gross Vehicle Weight of shadow vehicle V2 shall be a minimum of 9000 kilograms and shall be equipped with a truck-mounted attenuator. The sign panel shown and a Type II flashing arrow sign shall be mounted on the rear of shadow vehicle V2.
7. All vehicles used for lane closures shall be equipped with two-way radios, and the vehicle operators shall maintain communication during the work or application operation.
8. All vehicles shall be equipped with flashing or rotating amber lights.
9. Where sufficient shoulder width is not available, sign vehicle V1 may encroach into the traffic lane staying as close to the edge of shoulder as practicable. Both V1 and V2 shall be equipped with a truck-mounted attenuator. The Gross Vehicle Weight of V1 and V2 shall be at least 9000 kg, respectively.
10. Where workers would be on foot in the work area, a stationary type lane closure (Standard Plan T10, T11, etc., as applicable) shall be used instead of this plan.
11. For moving lane closure on median or outside lanes of multilane highways, see Standard Plan T15.
12. When multiple work vehicles are used in close proximity to each other, only one shadow vehicle is required, and spacing between work vehicles shall be minimized in order to deter traffic from entering the closed lane.

STATE OF CALIFORNIA
DEPARTMENT OF TRANSPORTATION

TRAFFIC CONTROL SYSTEM FOR MOVING LANE CLOSURE ON MULTILANE HIGHWAYS

NO SCALE

ALL DIMENSIONS ARE IN MILLIMETERS UNLESS OTHERWISE SHOWN

T16

05-07-04

Back to Table of Contents

DIST	COUNTY	ROUTE	KILOMETER POST TOTAL PROJECT	SHEET NO.	TOTAL SHEETS

Caltrans Metric

REGISTERED CIVIL ENGINEER

July 1, 2004
PLANS APPROVAL DATE

REGISTERED PROFESSIONAL ENGINEER Greg W. Edwards No. C36386 Exp. 6-30-06 CIVIL STATE OF CALIFORNIA

The State of California or its officers or agents shall not be responsible for the accuracy or completeness of electronic copies of this plan sheet.

To get to the Caltrans web site, go to: http://www.dot.ca.gov

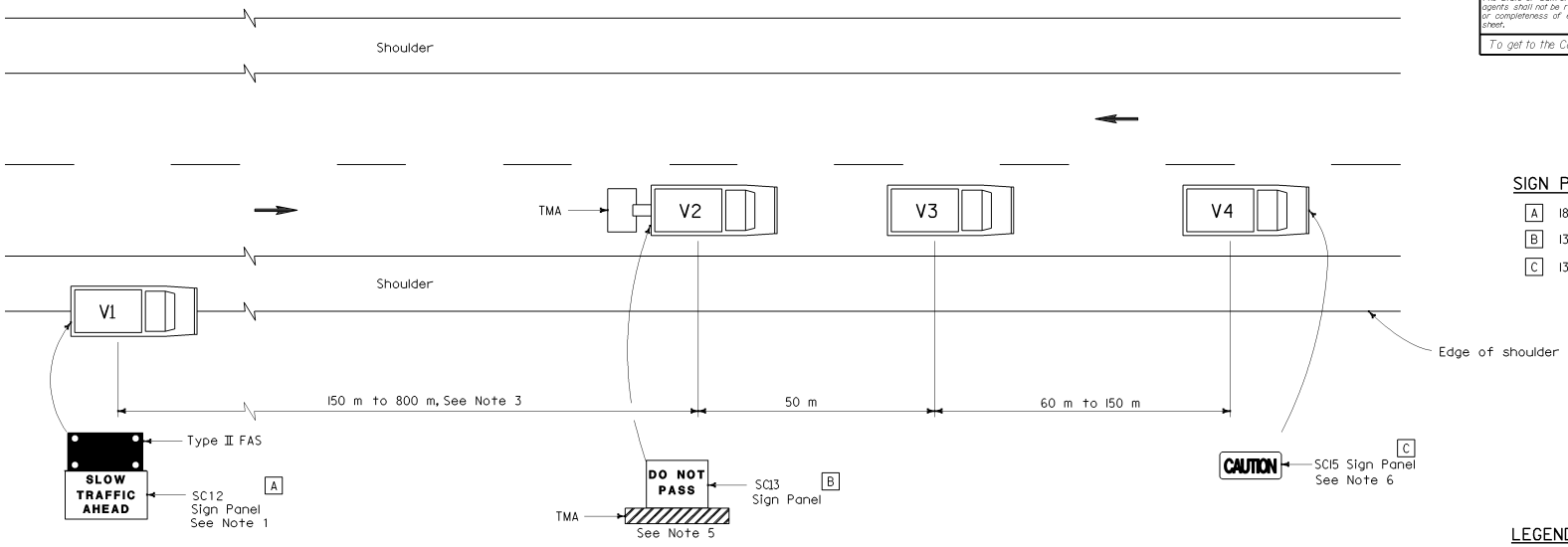

SIGN PANEL SIZE (Min)

A	1829 mm x 1067 mm
B	1372 mm x 1067 mm
C	1372 mm x 610 mm

LEGEND

V1	Sign Vehicle
V2	Shadow Vehicle
V3	Work/Application Vehicle
V4	Sign Vehicle
TMA	Truck-Mounted Attenuator
→	Direction of Travel
▬	Flashing Arrow Sign (FAS) in flashing caution mode

NOTES

1. Either a changeable message sign or a SC12 "SLOW TRAFFIC AHEAD" sign shall be mounted on the rear of sign vehicle V1. A Type II flashing arrow sign may be used with the SC12 sign panel.
2. Sign vehicle V1 should be positioned where highly visible when shoulders are not available.
3. If traffic queues develop, sign vehicle V1 should be positioned upstream from the end of queue.
4. Vehicle-mounted sign panels shall be Type III, IV VII, VIII, or IX retroreflective sheeting, black on white, black on orange, or black on fluorescent orange, with 150 mm minimum series D letters per Caltrans sign specifications.
5. Gross Vehicle Weight of shadow vehicle shall be a minimum of 9000 kilograms and shall be equipped with a truck-mounted attenuator. The sign panel shown shall be mounted on the rear of shadow vehicle V2. The message "LANE CLOSED" may be used in place of the "DO NOT PASS" message.
6. The sign panel shown shall be mounted on the front of sign vehicle V4, facing opposing traffic.
7. All vehicles shall be equipped with flashing or rotating amber lights.
8. Sign vehicle V4 will not be required when the work and vehicles V2 and V3 are 0.6 m or more from the centerline of the highway during the work or application operations.
9. All vehicles used for lane closures shall be equipped with two-way radios and the vehicle operators shall maintain communication during the work or application operation.
10. This plan shall not be used where workers would be on foot in the work area. Use a stationary type lane closure (Standard Plan T13) for this condition.
11. When multiple work vehicles are used in close proximity to each other, only one shadow vehicle is required and spacing between work vehicles shall be minimized in order to deter traffic from entering the closed lane.

STATE OF CALIFORNIA
DEPARTMENT OF TRANSPORTATION

TRAFFIC CONTROL SYSTEM FOR MOVING LANE CLOSURE ON TWO LANE HIGHWAYS

NO SCALE

ALL DIMENSIONS ARE IN MILLIMETERS UNLESS OTHERWISE SHOWN

T17

05-27-04

Back to Table of Contents

DIST	COUNTY	ROUTE	KILOMETER POST TOTAL PROJECT	SHEET NO.	TOTAL SHEETS

Caltrans Metric

LICENSED LANDSCAPE ARCHITECT

July 1, 2004
PLANS APPROVAL DATE

The State of California or its officers or agents shall not be responsible for the accuracy or completeness of electronic copies of this plan sheet.

LICENSED LANDSCAPE ARCHITECT Robert B. Schott 3651 Signature 04-20-04 Renewal Date 11-30-04 Date STATE OF CALIFORNIA

To get to the Caltrans web site, go to: http://www.dot.ca.gov

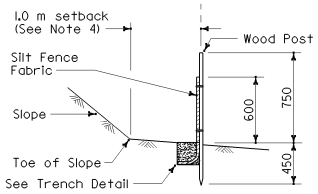

SECTION A-A
TEMPORARY SILT FENCE

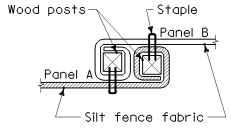

PLAN
POST AT JOINTS

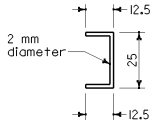

STAPLE DETAIL
(See Note 8)

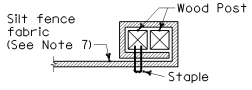

PLAN
END POST DETAIL

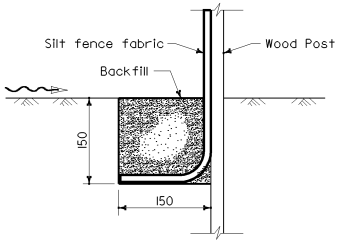

SECTION
TRENCH DETAIL

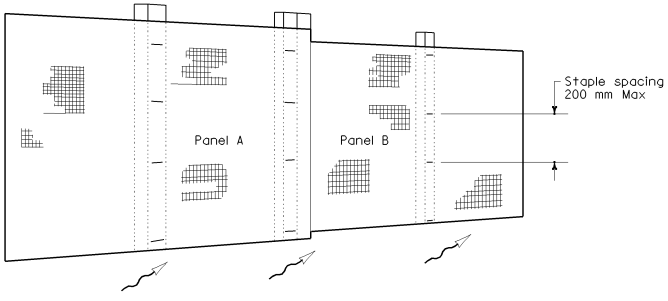

PERSPECTIVE
SILT FENCE PANELS AT JOINTS

NOTES

1. Install Temporary Silt Fence by first digging trench, driving posts, placing and securing fabric. Then backfill and tamp.
2. Reach length not to exceed 150 meters.
3. The down stream end of the Temporary Silt Fence shall have the last 2.5 meters angled up slope.
4. Setback dimensions may vary to fit field conditions.
5. Posts to overlap and fence fabric to fold around each post one full turn. Secure fabric with 4 staples for each post.
6. Posts shall be driven tightly together to prevent potential flow-through of sediment at the joint. The tops of the posts shall be secured to each other with wire.
7. For each end post, fence fabric shall be folded around two posts one full turn and secured with 4 staples.
8. Minimum of 4 staples shall be installed per post. Dimensions shown are typical.
9. Maintenance openings shall be constructed in a manner to ensure that sediment is retained by the temporary silt fence.
10. Joint sections shall not be placed at sump locations.

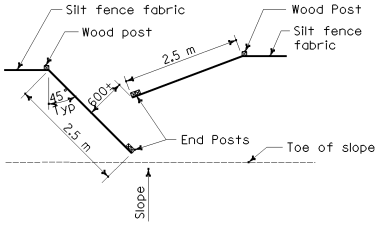

PLAN
OPTIONAL MAINTENANCE OPENING DETAIL

LEGEND

- Tamped backfill
- Slope direction
- Direction of flow

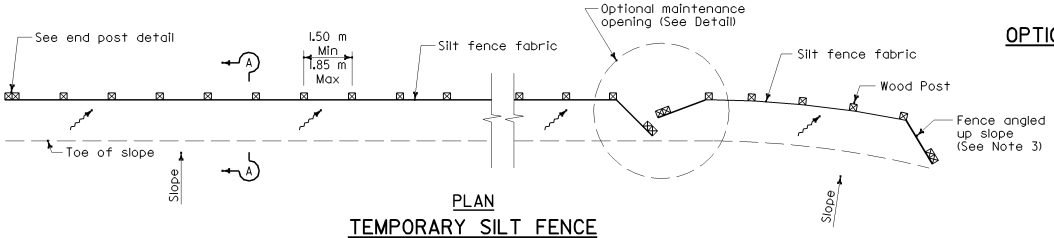

PLAN
TEMPORARY SILT FENCE

STATE OF CALIFORNIA
DEPARTMENT OF TRANSPORTATION

TEMPORARY WATER POLLUTION CONTROL DETAILS (TEMPORARY SILT FENCE)

NO SCALE

ALL DIMENSIONS ARE IN MILLIMETERS UNLESS OTHERWISE SHOWN

T51

04-23-04

Back to Table of Contents

DIST	COUNTY	ROUTE	KILOMETER POST TOTAL PROJECT	SHEET NO.	TOTAL SHEETS

Caltrans Metric

LICENSED LANDSCAPE ARCHITECT

July 1, 2004
PLANS APPROVAL DATE

LICENSED LANDSCAPE ARCHITECT
Robert B. Schott 3805
Signature
04-20-04
Renewal Date
11-30-04
Date
STATE OF CALIFORNIA

The State of California or its officers or agents shall not be responsible for the accuracy or completeness of electronic copies of this plan sheet.

To get to the Caltrans web site, go to: http://www.dot.ca.gov

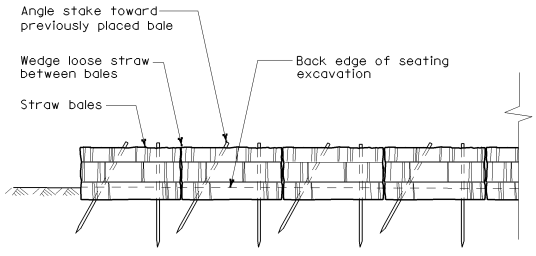

FRONT ELVATION

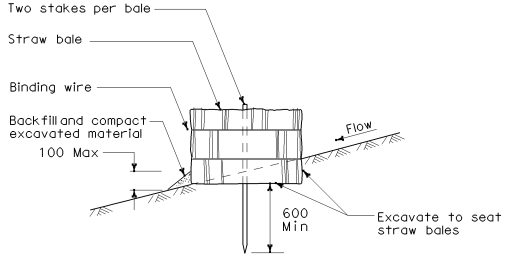

SECTION

TEMPORARY STRAW BALE BARRIER

NOTE

1. Temporary silt fence and temporary fence (Type ESA) shown for reference purposes only.

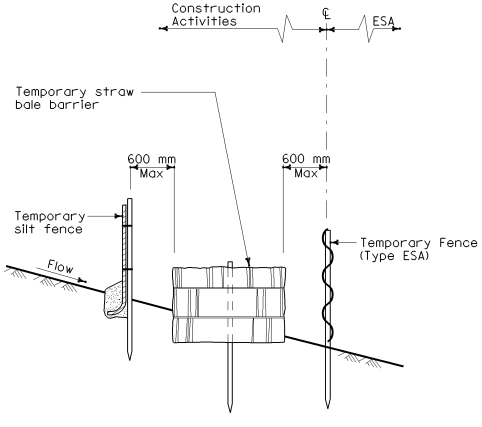

SECTION

PLACEMENT DETAIL
FOR TEMPORARY SILT FENCE
AND TEMPORARY FENCE (TYPE ESA)
USED WITH TEMPORARY STRAW BALE BARRIER
(See Note 1)

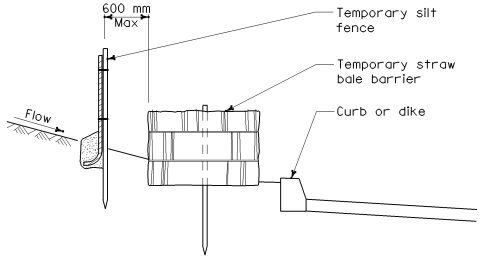

SECTION

PLACEMENT DETAIL
FOR TEMPORARY SILT FENCE
USED WITH TEMPORARY
STRAW BALE BARRIER
(See Note 1)

STATE OF CALIFORNIA
DEPARTMENT OF TRANSPORTATION

TEMPORARY WATER POLLUTION CONTROL DETAILS (TEMPORARY STRAW BALE BARRIER)

NO SCALE

ALL DIMENSIONS ARE IN MILLIMETERS UNLESS OTHERWISE SHOWN

T52

04-23-04

Back to Table of Contents

DIST	COUNTY	ROUTE	KILOMETER POST TOTAL PROJECT	SHEET NO.	TOTAL SHEETS

Caltrans Metric

LICENSED LANDSCAPE ARCHITECT

July 1, 2004
PLANS APPROVAL DATE

LICENSED LANDSCAPE ARCHITECT
Robert B. Schott 3693
Signature
04-20-04
Renewal Date
11-30-04
Date
STATE OF CALIFORNIA

The State of California or its officers or agents shall not be responsible for the accuracy or completeness of electronic copies of this plan sheet.

To get to the Caltrans web site, go to: http://www.dot.ca.gov

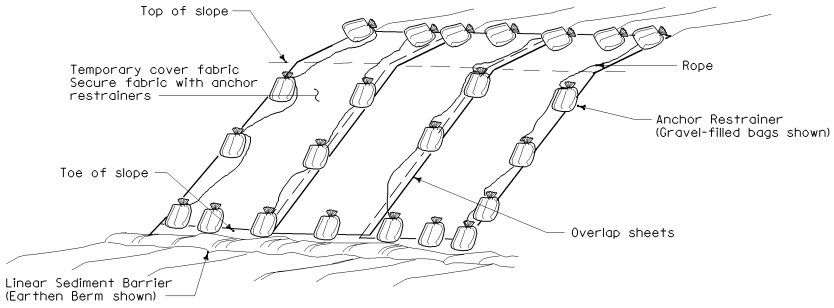

PERSPECTIVE
TEMPORARY COVER ON SLOPE

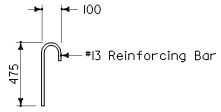

STEEL REINFORCING BAR DETAIL

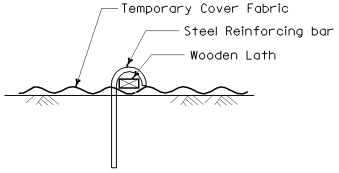

SECTION
ANCHOR RESTRAINER
(Steel bar and wooden lath)

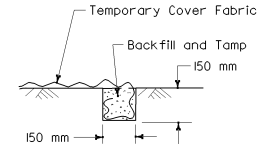

SECTION
KEY TRENCH DETAIL

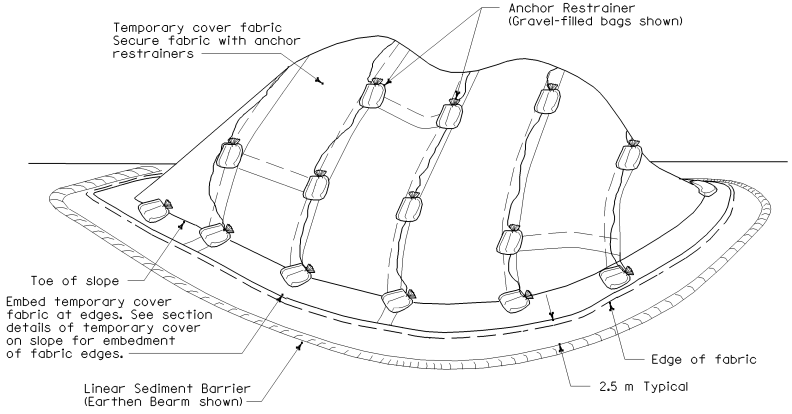

PERSPECTIVE
TEMPORARY COVER ON STOCKPILE

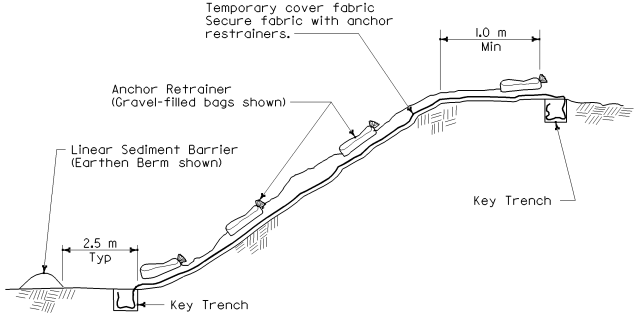

SECTION
TEMPORARY COVER ON SLOPE

STATE OF CALIFORNIA
DEPARTMENT OF TRANSPORTATION

TEMPORARY WATER POLLUTION CONTROL DETAILS (TEMPORARY COVER)

NO SCALE

ALL DIMENSIONS ARE IN MILLIMETERS UNLESS OTHERWISE SHOWN

T53

04-23-04

Back to Table of Contents

DIST	COUNTY	ROUTE	KILOMETER POST TOTAL PROJECT	SHEET NO.	TOTAL SHEETS

Caltrans Metric

LICENSED LANDSCAPE ARCHITECT

July 1, 2004
PLANS APPROVAL DATE

The State of California or its officers or agents shall not be responsible for the accuracy or completeness of electronic copies of this plan sheet.

To get to the Caltrans web site, go to: http://www.dot.ca.gov

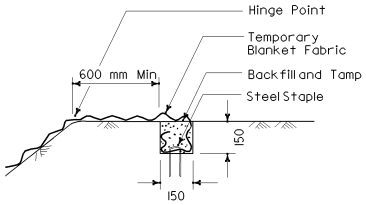

SECTION

DETAIL C
KEY TRENCH AT TOP OF SLOPE

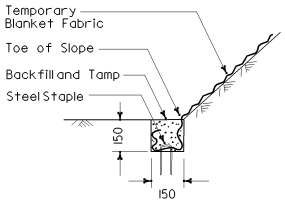

SECTION

DETAIL D
KEY TRENCH AT TOE OF SLOPE

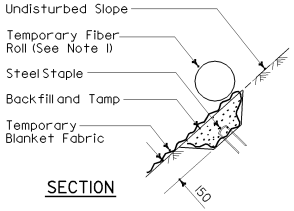

SECTION

DETAIL E
KEY TRENCH AT UPPER CONFORM

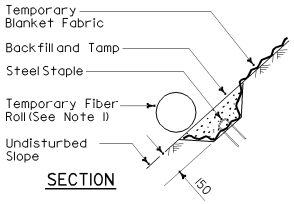

SECTION

DETAIL F
KEY TRENCH AT LOWER CONFORM

NOTE

1. Temporary fiber roll shown for reference purposes only.

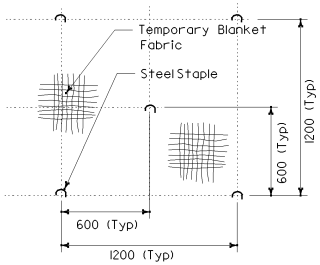

DETAIL A
STAPLE PATTERN

STAPLE DETAIL

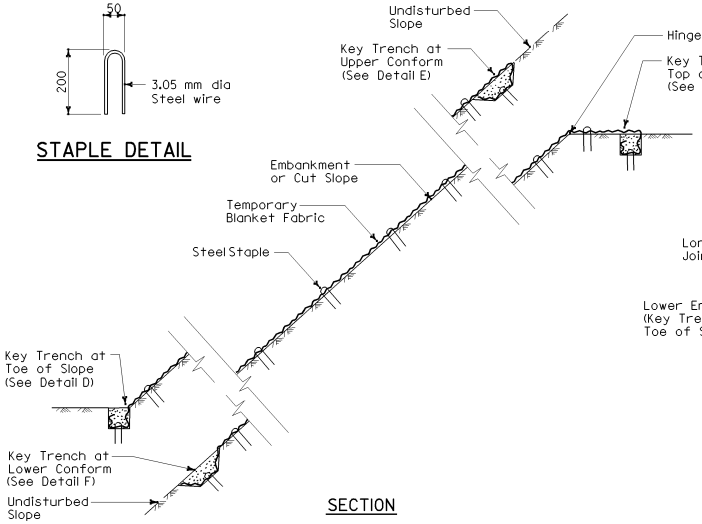

SECTION

TEMPORARY EROSION CONTROL BLANKET ON SLOPE WITH VARIOUS KEY ENTRENCHMENTS

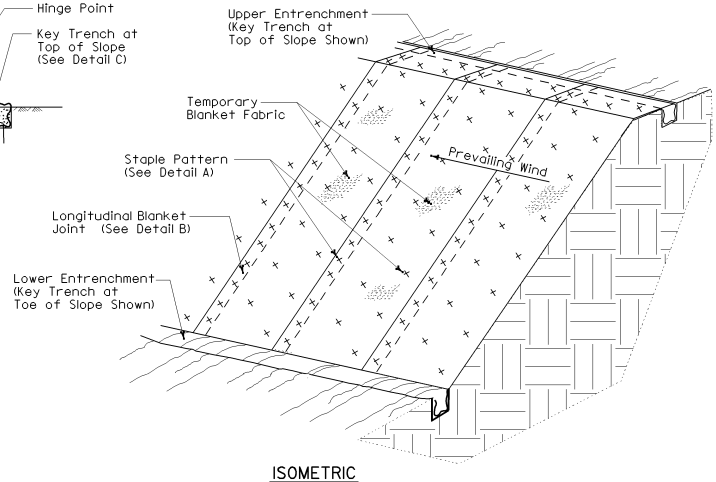

ISOMETRIC

TEMPORARY EROSION CONTROL BLANKET ON SLOPE

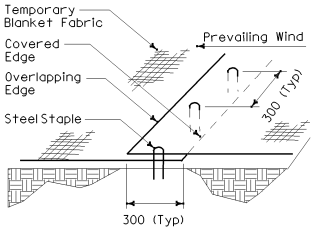

DETAIL B
LONGITUDINAL BLANKET JOINT

STATE OF CALIFORNIA
DEPARTMENT OF TRANSPORTATION

TEMPORARY WATER POLLUTION CONTROL DETAILS (TEMPORARY EROSION CONTROL BLANKET)

NO SCALE

ALL DIMENSIONS ARE IN MILLIMETERS UNLESS OTHERWISE SHOWN

T54

2004 Std PLAN T54

04-23-04

Back to Table of Contents

DIST	COUNTY	ROUTE	KILOMETER POST TOTAL PROJECT	SHEET NO.	TOTAL SHEETS

Caltrans Metric

LICENSED LANDSCAPE ARCHITECT

July 1, 2004
PLANS APPROVAL DATE

LICENSED LANDSCAPE ARCHITECT
Robert B. Schott 3854
Signature
04-20-04
Renewal Date
11-30-04
Date
STATE OF CALIFORNIA

The State of California or its officers or agents shall not be responsible for the accuracy or completeness of electronic copies of this plan sheet.

To get to the Caltrans web site, go to: http://www.dot.ca.gov

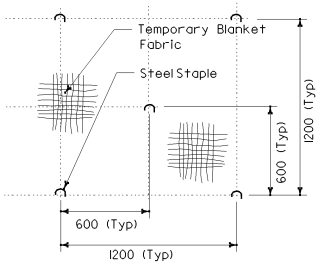

PLAN
DETAIL A
STAPLE PATTERN

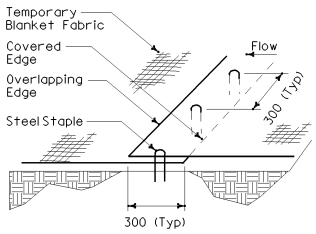

PERSPECTIVE
DETAIL B
LONGITUDINAL BLANKET JOINT

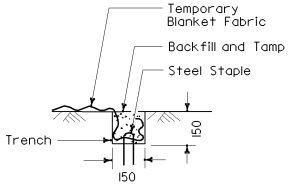

SECTION
DETAIL C
KEY TRENCH

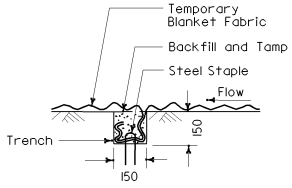

SECTION
DETAIL D
TRANSVERSE BLANKET JOINT

NOTE

1. For clarity, perspective view does not show all staples.

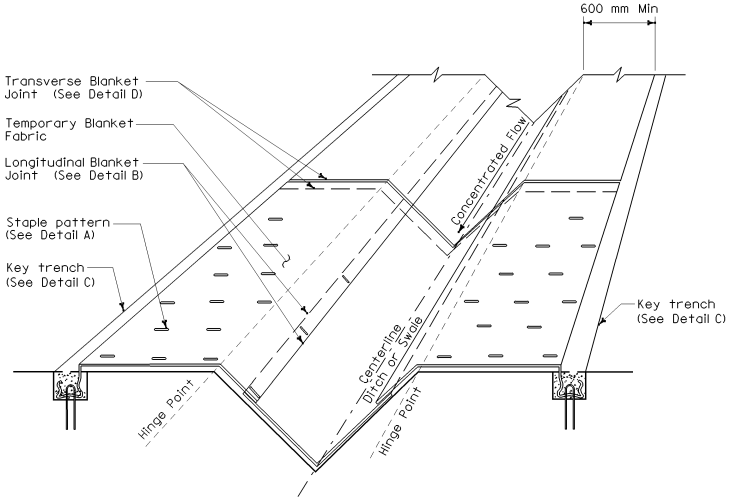

PERSPECTIVE

TEMPORARY EROSION CONTROL BLANKET
IN V-DITCH OR SWALE

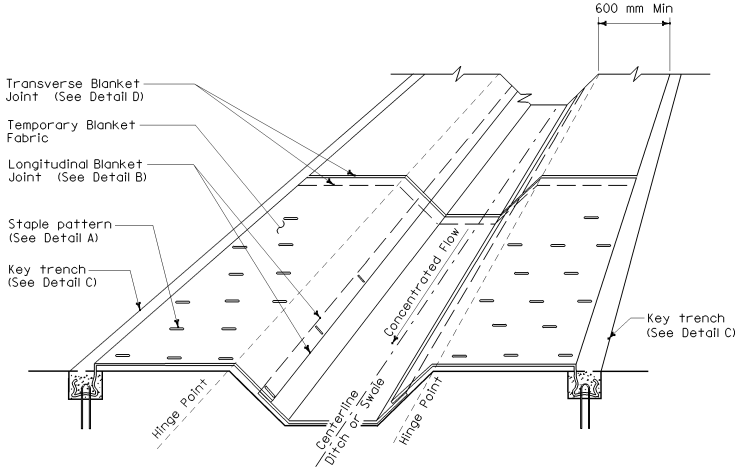

PERSPECTIVE

TEMPORARY EROSION CONTROL BLANKET
IN TRAPAZOIDAL DITCH OR SWALE

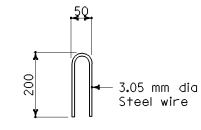

STAPLE DETAIL

STATE OF CALIFORNIA
DEPARTMENT OF TRANSPORTATION

TEMPORARY WATER POLLUTION CONTROL DETAILS (TEMPORARY EROSION CONTROL BLANKET)

NO SCALE

ALL DIMENSIONS ARE IN MILLIMETERS UNLESS OTHERWISE SHOWN

T55

06-18-04

Back to Table of Contents

DIST	COUNTY	ROUTE	KILOMETER POST TOTAL PROJECT	SHEET NO.	TOTAL SHEETS

Caltrans Metric

LICENSED LANDSCAPE ARCHITECT

July 1, 2004
PLANS APPROVAL DATE

The State of California or its officers or agents shall not be responsible for the accuracy or completeness of electronic copies of this plan sheet.

To get to the Caltrans web site, go to: http://www.dot.ca.gov

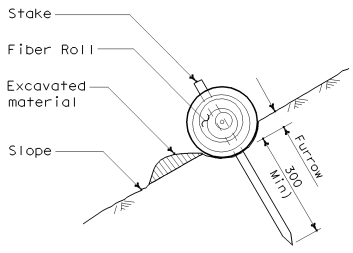

SECTION

TEMPORARY FIBER ROLL (TYPE 1)

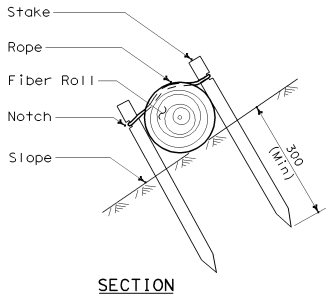

SECTION

TEMPORARY FIBER ROLL (TYPE 2)

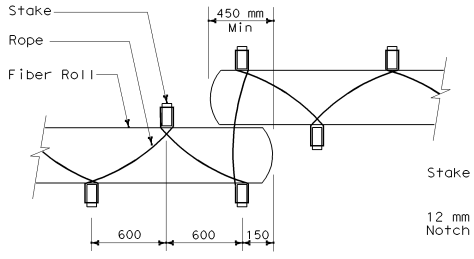

PLAN

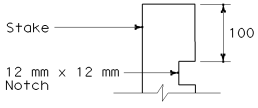

ELEVATION

STAKE NOTCH DETAIL

NOTE

1. Temporary fiber roll spacing varies depending upon slope inclination.
2. Installations shown in the perspectives are for slope inclination of 1:10 and steeper.

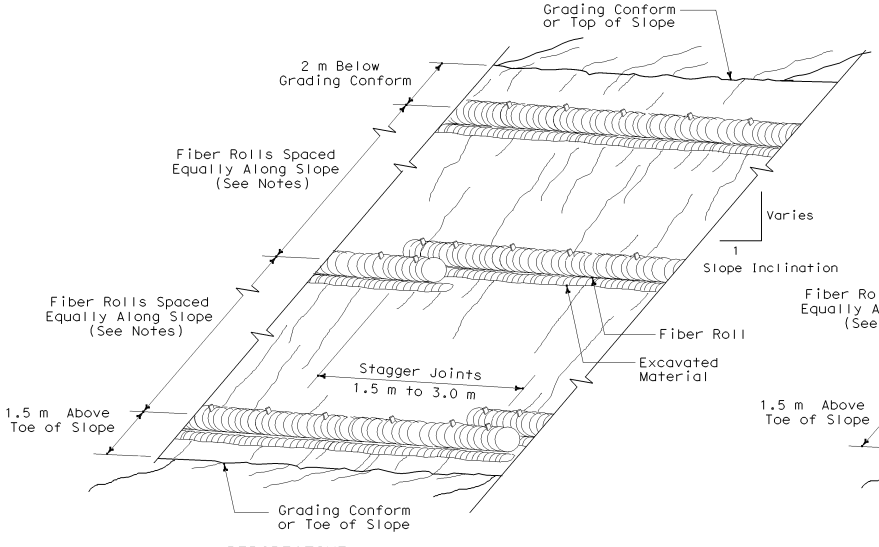

PERSPECTIVE

TEMPORARY FIBER ROLL (TYPE 1)

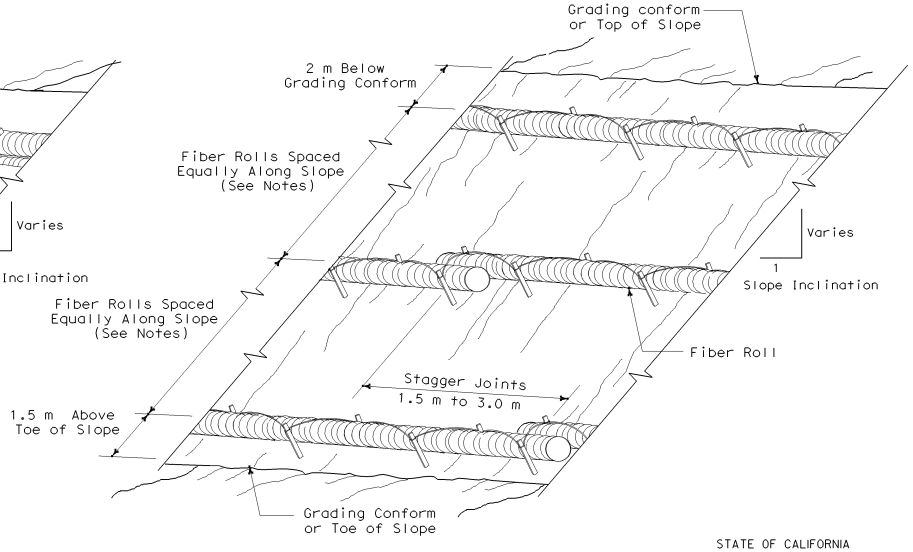

PERSPECTIVE

TEMPORARY FIBER ROLL (TYPE 2)

STATE OF CALIFORNIA
DEPARTMENT OF TRANSPORTATION

TEMPORARY WATER POLLUTION CONTROL DETAILS (TEMPORARY FIBER ROLL)

NO SCALE

ALL DIMENSIONS ARE IN MILLIMETERS UNLESS OTHERWISE SHOWN

T56

04-23-04

Back to Table of Contents

DIST	COUNTY	ROUTE	KILOMETER POST TOTAL PROJECT	SHEET NO.	TOTAL SHEETS

Caltrans Metric

LICENSED LANDSCAPE ARCHITECT

July 1, 2004
PLANS APPROVAL DATE

The State of California or its officers or agents shall not be responsible for the accuracy or completeness of electronic copies of this plan sheet.

LICENSED LANDSCAPE ARCHITECT Robert B. Schott 3601 Signature 04-20-04 Renewal Date 11-30-04 Date STATE OF CALIFORNIA

To get to the Caltrans web site, go to: http://www.dot.ca.gov

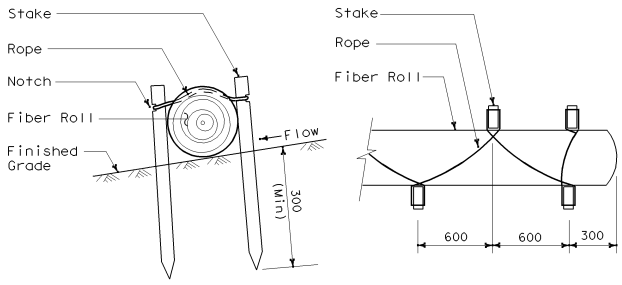

SECTION PLAN

STAKING AND LASHING DETAIL

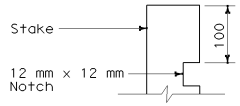

ELEVATION

STAKE NOTCH DETAIL

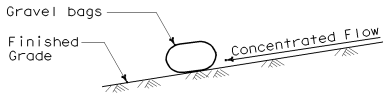

SECTION

TEMPORARY CHECK DAM (TYPE 2)

NOTE

1. Spillway depth 'd' shall be maintained to prevent flanking of concentrated flow around the ends of each check dam.

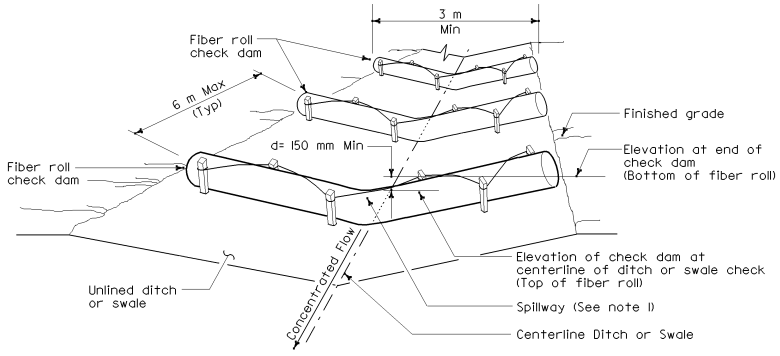

PERSPECTIVE

TEMPORARY CHECK DAM (TYPE 1)

(Total of 3 check dams shown)

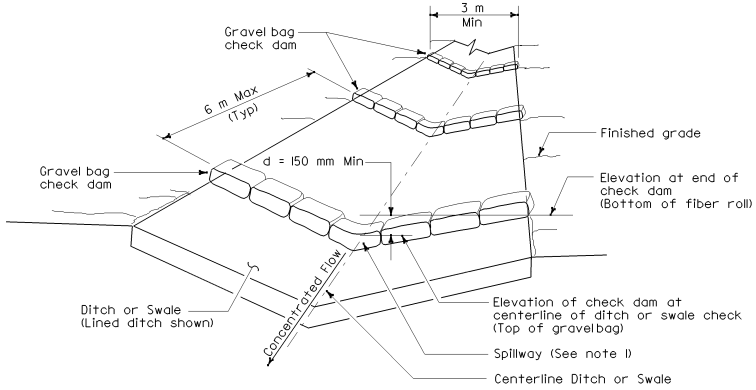

PERSPECTIVE

TEMPORARY CHECK DAM (TYPE 2)

(Total of 3 check dams shown)

STATE OF CALIFORNIA
DEPARTMENT OF TRANSPORTATION

TEMPORARY WATER POLLUTION CONTROL DETAILS (TEMPORARY CHECK DAM)

NO SCALE

ALL DIMENSIONS ARE IN MILLIMETERS UNLESS OTHERWISE SHOWN

T57

04-23-04

Back to Table of Contents

DIST	COUNTY	ROUTE	KILOMETER POST TOTAL PROJECT	SHEET NO.	TOTAL SHEETS

Caltrans Metric

LICENSED LANDSCAPE ARCHITECT

July 1, 2004
PLANS APPROVAL DATE

LICENSED LANDSCAPE ARCHITECT Robert B. Schott 3824 STATE OF CALIFORNIA
04-20-04 Registration Date
11-30-04 Date

The State of California or its officers or agents shall not be responsible for the accuracy or completeness of electronic copies of this plan sheet.

To get to the Caltrans web site, go to: http://www.dot.ca.gov

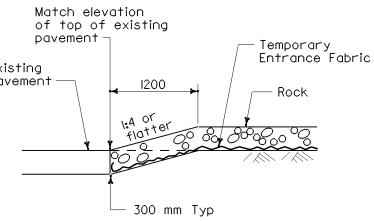

SECTION
CONFORM DETAIL

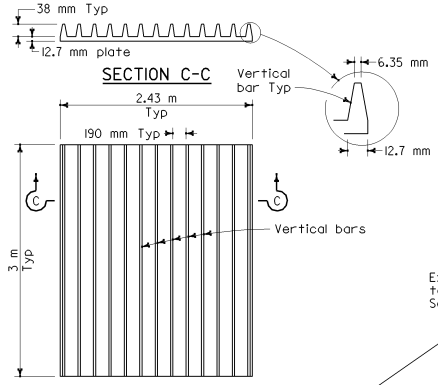

PLAN
TYPICAL CORRUGATED STEEL PANEL DETAIL

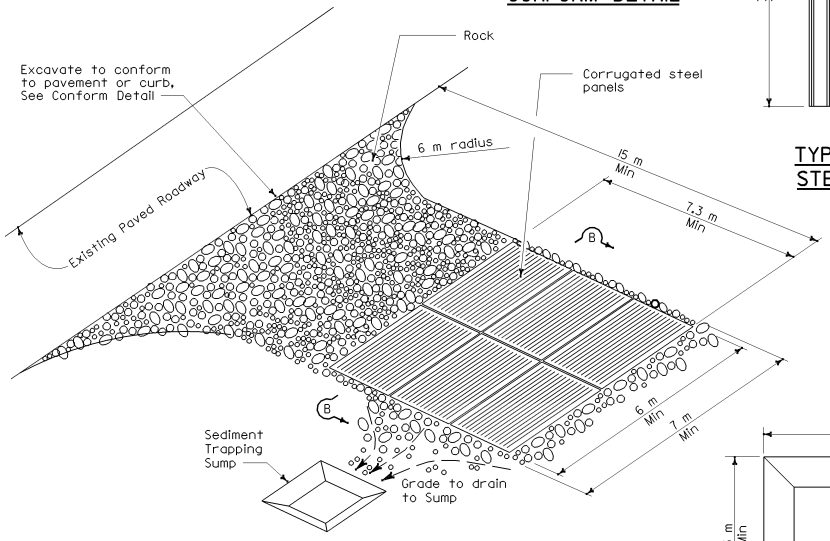

PERSPECTIVE
TEMPORARY CONSTRUCTION ENTRANCE (TYPE 2)

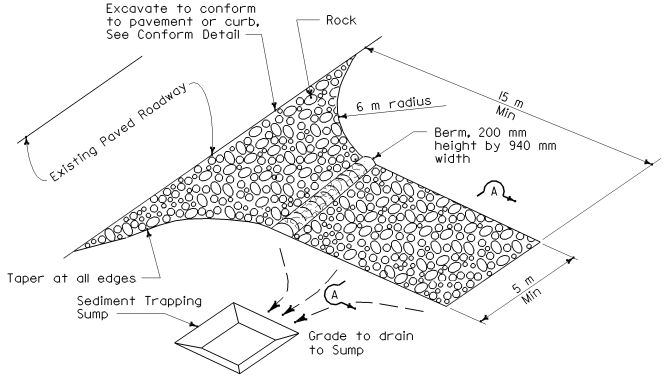

PERSPECTIVE
TEMPORARY CONSTRUCTION ENTRANCE (TYPE 1)

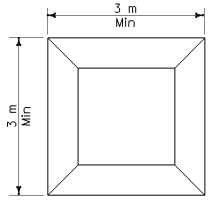

PLAN

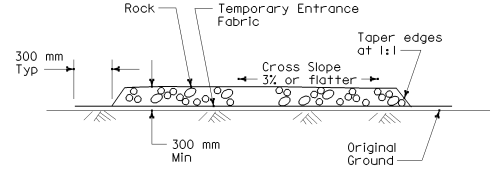

SECTION A-A

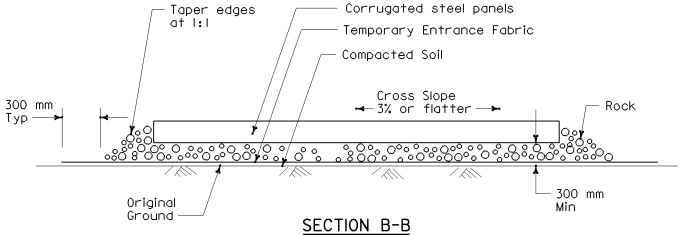

SECTION B-B

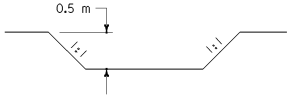

ELEVATION
SEDIMENT TRAPPING SUMP

STATE OF CALIFORNIA
DEPARTMENT OF TRANSPORTATION

TEMPORARY WATER POLLUTION CONTROL DETAILS (TEMPORARY CONSTRUCTION ENTRANCE)

NO SCALE

ALL DIMENSIONS ARE IN MILLIMETERS UNLESS OTHERWISE SHOWN

T58

04-23-04

Back to Table of Contents

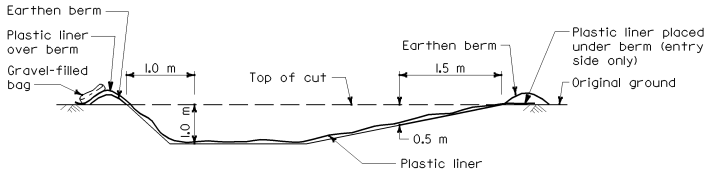

SECTION B-B

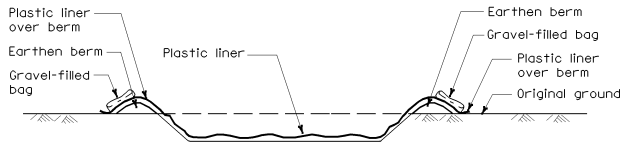

SECTION A-A

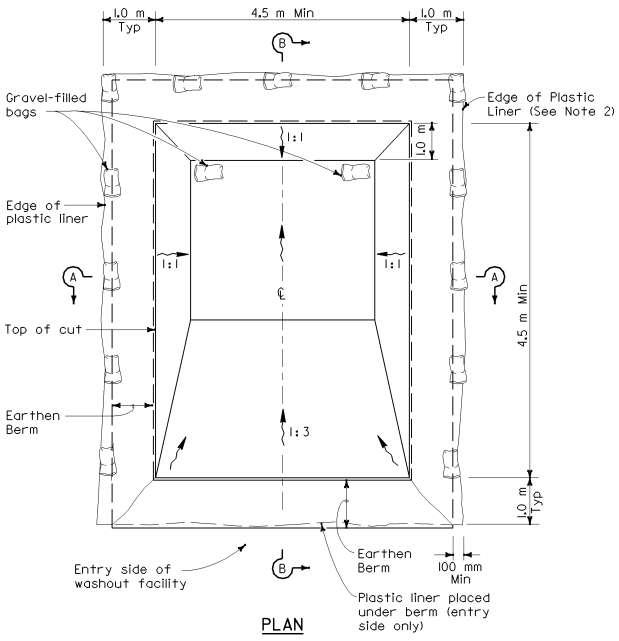

PLAN

TEMPORARY CONCRETE WASHOUT FACILITY

(Below Grade)

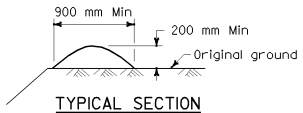

TYPICAL SECTION

EARTHEN BERM

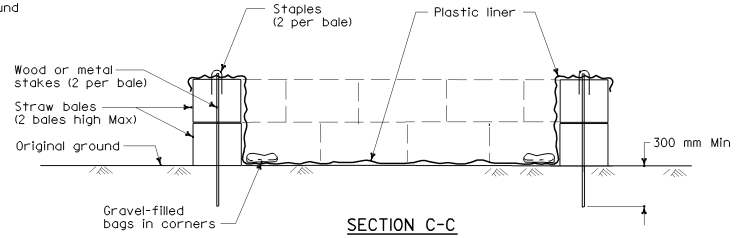

SECTION C-C

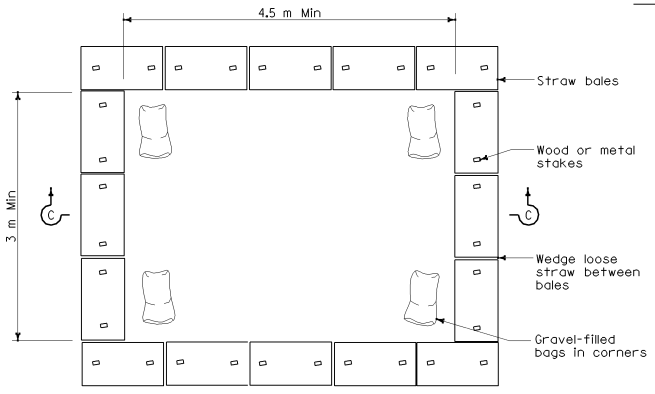

PLAN

TEMPORARY CONCRETE WASHOUT FACILITY

(On Grade)

Caltrans Metric

DIST	COUNTY	ROUTE	KILOMETER POST TOTAL PROJECT	SHEET NO.	TOTAL SHEETS

LICENSED LANDSCAPE ARCHITECT

July 1, 2004

PLANS APPROVAL DATE

The State of California or its officers or agents shall not be responsible for the accuracy or completeness of electronic copies of this plan sheet.

LICENSED LANDSCAPE ARCHITECT Robert B. Schott 3691 Signature 04-20-04 Renewal Date 11-30-04 Date STATE OF CALIFORNIA

To get to the Caltrans web site, go to: http://www.dot.ca.gov

NOTES

1. The concrete washout sign shall be installed within 10 meters of the temporary concrete washout facility.
2. Plastic liner shall be anchored with gravel-filled bags for below grade concrete washout facility.

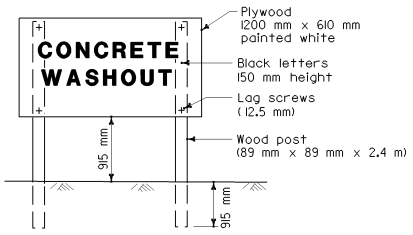

CONCRETE WASHOUT SIGN DETAIL

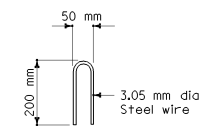

STAPLE DETAIL

STATE OF CALIFORNIA
DEPARTMENT OF TRANSPORTATION

TEMPORARY WATER POLLUTION CONTROL DETAILS (TEMPORARY CONCRETE WASHOUT FACILITY)

NO SCALE

ALL DIMENSIONS ARE IN MILLIMETERS UNLESS OTHERWISE SHOWN

T59

04-23-04

Back to Table of Contents

BRIDGE PLAN ABBREVIATIONS

See Standard Plans A10A and A10B for additional abbreviations

Brg	Bearing
CG	Center of gravity
CIP	Cast-in-place
Cont	Continuous
FS	Far side
IF	Inside face
NS	Near side
OF	Outside face
J	Outer, outer left bridge
K	Outer left bridge
S	Outer right bridge
T	Outer, outer right bridge
T&B	Top and bottom

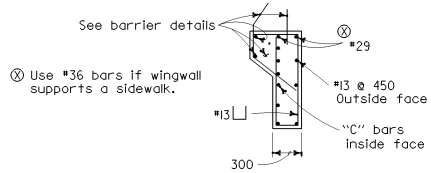

SECTION J-J
Without overhang

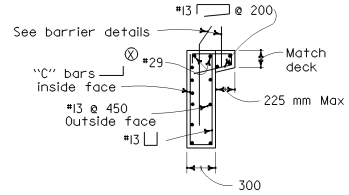

SECTION J-J
With overhang

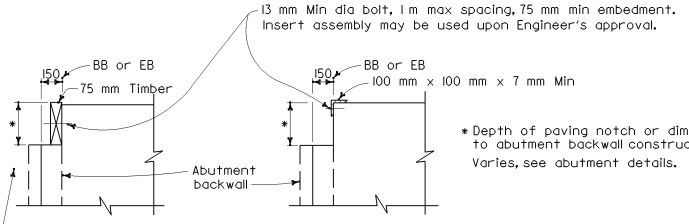

TEMPORARY BUMPERS
BRIDGE DETAIL 1-2

ALTERNATIVE 1 ALTERNATIVE 2

Top of bumper to be at or above the top of deck concrete. Bumpers and bolts to be removed immediately prior to placing approach pavement.

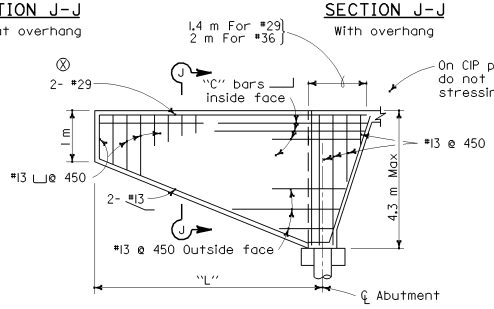

ELEVATION
SLOPING ABUTMENT

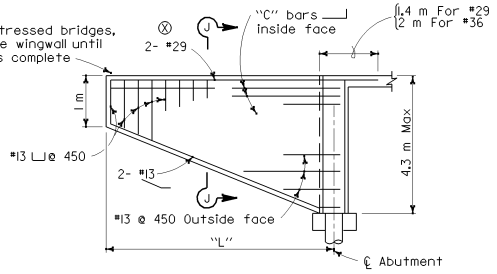

ELEVATION
VERTICAL ABUTMENT

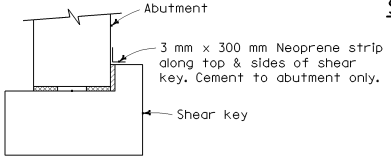

BRIDGE DETAIL 1-6
SHEAR KEY JOINT PROTECTION

"L"	"C" Bars
3.7 m	#16 @ 225
4.3 m	#19 @ 225
5 m	#22 @ 225
5.5 m	#25 @ 225
6 m	#29 @ 225

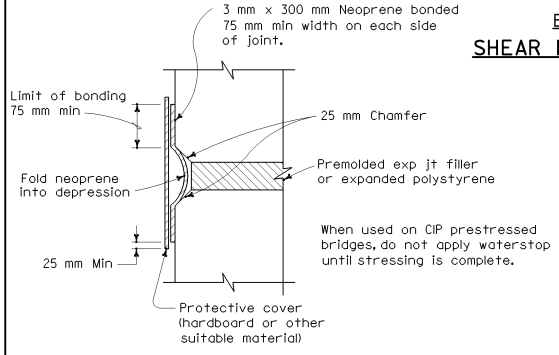

BRIDGE DETAIL 1-3
STRIP WATERSTOP DETAIL

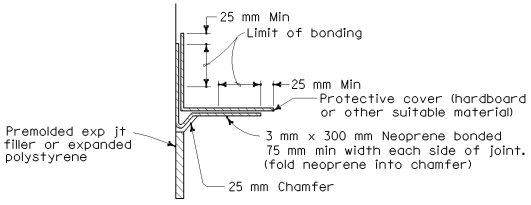

BRIDGE DETAIL 1-4
STRIP WATERSTOP CORNER DETAIL

When used on CIP prestressed bridges, do not apply waterstop until stressing is complete.

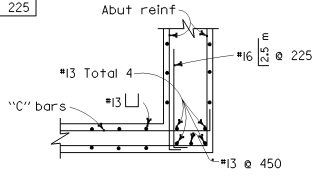

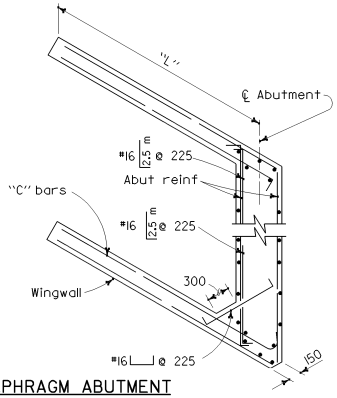

WINGWALLS FOR DIAPHRAGM ABUTMENT
BRIDGE DETAIL 1-5

CORNER DETAIL
FOR SKEW 20° AND LESS

CORNER DETAIL
FOR SKEW OVER 20°

Caltrans Metric

DIST	COUNTY	ROUTE	KILOMETER POST TOTAL PROJECT	SHEET NO.	TOTAL SHEETS

REGISTERED CIVIL ENGINEER

July 1, 2004
PLANS APPROVAL DATE

REGISTERED PROFESSIONAL ENGINEER Madhwesh Raghavendrachar No. C51119 Exp. 9-30-05 CIVIL STATE OF CALIFORNIA

The State of California or its officers or agents shall not be responsible for the accuracy or completeness of electronic copies of this plan sheet.

To get to the Caltrans web site, go to: http://www.dot.ca.gov

STATE OF CALIFORNIA
DEPARTMENT OF TRANSPORTATION

BRIDGE DETAILS

NO SCALE

ALL DIMENSIONS ARE IN MILLIMETERS UNLESS OTHERWISE SHOWN

BO-1

06-15-04

2004 Std PLAN BO-1

Back to Table of Contents

DIST	COUNTY	ROUTE	KILOMETER POST TOTAL PROJECT	SHEET NO.	TOTAL SHEETS

Caltrans Metric

REGISTERED CIVIL ENGINEER

July 1, 2004
PLANS APPROVAL DATE

REGISTERED PROFESSIONAL ENGINEER Overcomer Y. Hor No. 45803 Exp. 12-31-06 CIVIL STATE OF CALIFORNIA

The State of California or its officers or agents shall not be responsible for the accuracy or completeness of electronic copies of this plan sheet.

To get to the Caltrans web site, go to: http://www.dot.ca.gov

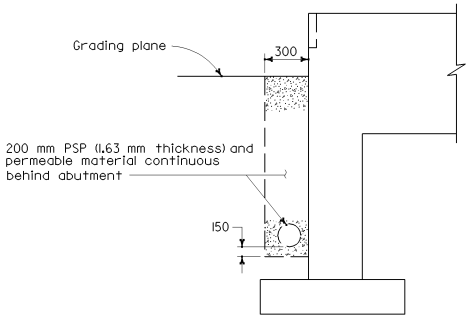

BRIDGE DETAIL 3-5
200 mm PSP AND PERMEABLE MATERIAL

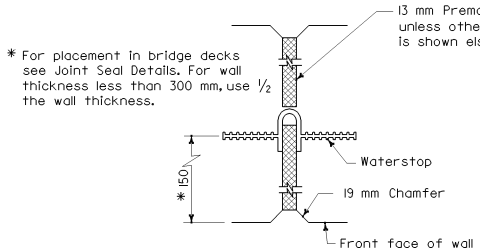

BRIDGE DETAIL 3-4
WALL EXPANSION JOINT

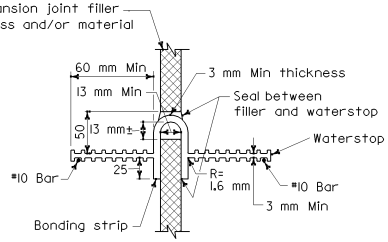

BRIDGE DETAIL 3-6
WATERSTOP

NOTES

Holes will be permitted in the outer 13 millimeters of the web for wire, rings, etc. Tie web to #10 reinforcing bars @ 400 millimeters maximum intervals to support the waterstop in proper position during concrete placement. Alternative detail may be submitted for approval of the Engineer.

Waterstop to have 5 or more pairs of of raised ribs to provide 65 square millimeters minimum rib cross-section area on each half of the waterstop.

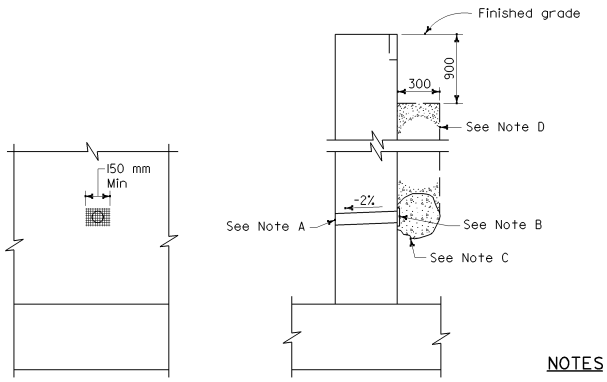

ELEVATION SECTION

BRIDGE DETAIL 3-1
WEEP HOLE AND PERVIOUS BACKFILL

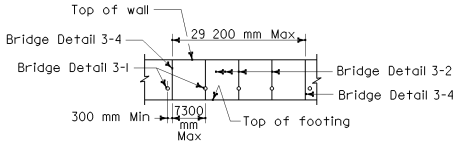

BRIDGE DETAIL 3-3
WALL EXPANSION JOINTS AND WEAKENED PLANES

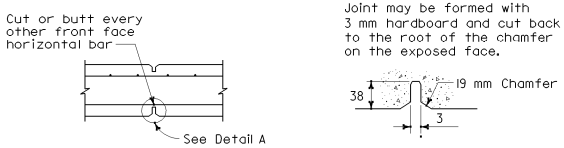

SECTION DETAIL A

BRIDGE DETAIL 3-2
WEAKENED PLANES

NOTES

A. 100 millimeter Ø Drains @ 7600 millimeters maximum center to center (2750 millimeters center to center for Type 3 and 2800 millimeters center to center for Type 4 retaining walls). For walls adjacent to sidewalks or curbs, provide 100 millimeters plastic pipe under the sidewalk to discharge thru curb face. Exposed wall drains shall be located 75 millimeters ± above finished grade.

B. 150 millimeters square aluminum or galvanized steel wire 6 millimeters mesh hardware cloth (minimum wire diameter 0.64 millimeters). Anchor firmly to backface.

C. 0.03 cubic meter pervious backfill material in a nonwoven filter fabric, securely tied.

D. Pervious backfill material continuous behind retaining wall or abutment.

STATE OF CALIFORNIA
DEPARTMENT OF TRANSPORTATION

BRIDGE DETAILS

NO SCALE

ALL DIMENSIONS ARE IN MILLIMETERS UNLESS OTHERWISE SHOWN

B0-3

06-15-04

Back to Table of Contents

DIST	COUNTY	ROUTE	KILOMETER POST TOTAL PROJECT	SHEET NO.	TOTAL SHEETS

Caltrans Metric

REGISTERED CIVIL ENGINEER

July 1, 2004
PLANS APPROVAL DATE

REGISTERED PROFESSIONAL ENGINEER Madhwesh Raghavendrachar No. C51119 Exp. 9-30-05 CIVIL STATE OF CALIFORNIA

The State of California or its officers or agents shall not be responsible for the accuracy or completeness of electronic copies of this plan sheet.

To get to the Caltrans web site, go to: http://www.dot.ca.gov

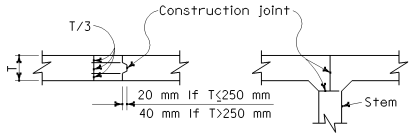

BRIDGE DETAIL 5-2 BRIDGE DETAIL 5-3

Top or bottom slab

DECK CONSTRUCTION JOINTS

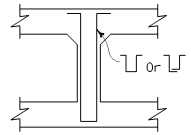

REINFORCED BOX GIRDER

Girder or diaphragm

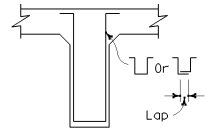

T-BEAM

Girder, bent cap or diaphragm

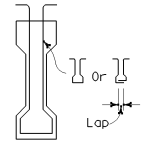

PRECAST GIRDER

A reinforcement bar must be placed inside of each stirrup hook or 90° bend.

BRIDGE DETAIL 5-5

ALTERNATIVE STIRRUPS

Stirrup Size	Lap (mm)
#13	125
#16	150
#19	200
#22	225
#25	250

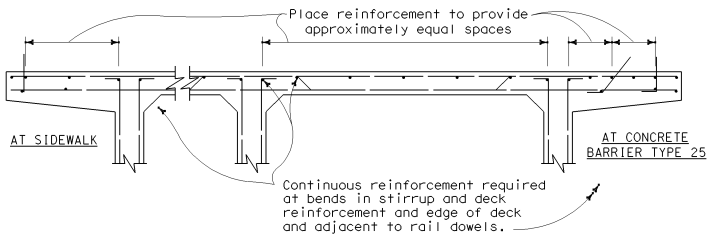

BRIDGE DETAIL 5-15

TOP GIRDER REINFORCEMENT

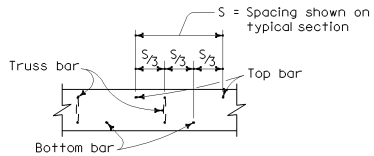

BRIDGE DETAIL 5-10

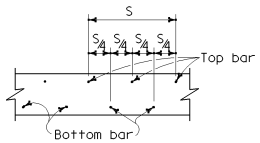

BRIDGE DETAIL 5-11

TRANSVERSE DECK REINFORCEMENT SPACING DIAGRAMS

NOTES

The Contractor shall submit a deck placing schedule which will be subject to the approval of the Engineer. Unless shown otherwise on the plans, the following conditions shall be provided for:

1. Transverse joints will not be permitted in simple spans unless approved by the Engineer. For continuous spans, transverse joints may be located at about the 1/4 point of span. If the deck is placed over continuous steel or precast concrete girders, the portion over the supports shall be placed last.
2. Longitudinal joints shall be located at the edge of a traffic lane unless otherwise permitted by the Engineer.
3. For decks supported on precast concrete girders, the intermediate and end diaphragms shall be placed at least five days before the deck.
4. For deck supported on structural steel, the crossframes for the entire width of bridge shall be in place.
5. Reinforcing steel shall be continuous thru all construction joints.

STATE OF CALIFORNIA
DEPARTMENT OF TRANSPORTATION

BRIDGE DETAILS

NO SCALE

ALL DIMENSIONS ARE IN MILLIMETERS UNLESS OTHERWISE SHOWN

BO-5

04-01-04

Back to Table of Contents

DIST	COUNTY	ROUTE	KILOMETER POST TOTAL PROJECT	SHEET NO.	TOTAL SHEETS

REGISTERED CIVIL ENGINEER

July 1, 2004
PLANS APPROVAL DATE

REGISTERED PROFESSIONAL ENGINEER Madhwesh Raghavendrachar No. C51119 Exp. 9-30-05 CIVIL STATE OF CALIFORNIA

The State of California or its officers or agents shall not be responsible for the accuracy or completeness of electronic copies of this plan sheet.

To get to the Caltrans web site, go to: http://www.dot.ca.gov

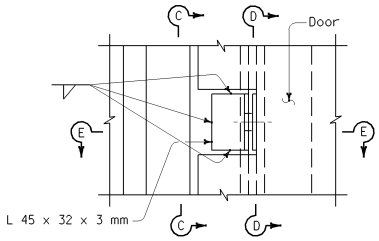

ELEVATION

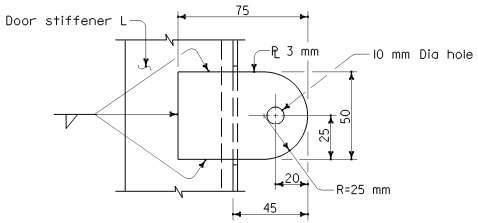

SECTION D-D

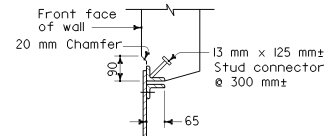

SECTION A-A

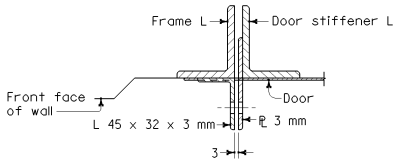

SECTION E-E

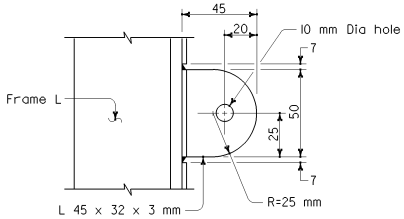

SECTION C-C

HASP DETAIL

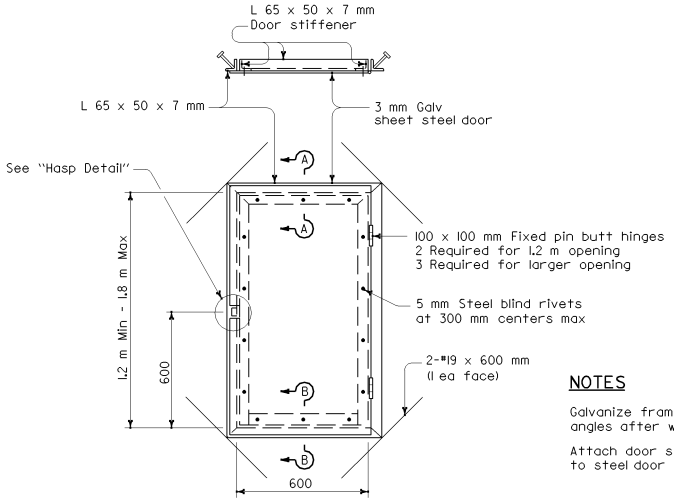

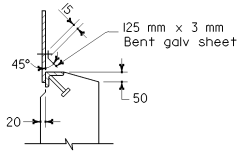

SECTION B-B

NOTES

Galvanize frame assemblies and door stiffener angles after welding and fabrication.

Attach door stiffener angles and bent sheet to steel door with blind rivets.

BRIDGE DETAIL 13-3

ACCESS DOOR

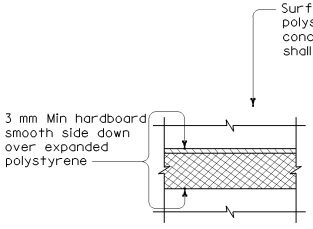

BRIDGE DETAIL 13-1

PROTECTION OF HORIZONTAL POLYSTYRENE

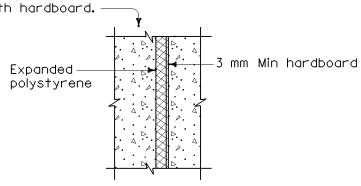

BRIDGE DETAIL 13-2

PROTECTION OF VERTICAL POLYSTYRENE

STATE OF CALIFORNIA
DEPARTMENT OF TRANSPORTATION

BRIDGE DETAILS

NO SCALE

ALL DIMENSIONS ARE IN MILLIMETERS UNLESS OTHERWISE SHOWN

BO-13

06-15-04

Back to Table of Contents

DIST	COUNTY	ROUTE	KILOMETER POST TOTAL PROJECT	SHEET NO.	TOTAL SHEETS

Caltrans Metric

REGISTERED CIVIL ENGINEER

July 1, 2004
PLANS APPROVAL DATE

REGISTERED PROFESSIONAL ENGINEER Daniel T. Adams No. 46476 Exp. 06-30-07 CIVIL STATE OF CALIFORNIA

The State of California or its officers or agents shall not be responsible for the accuracy or completeness of electronic copies of this plan sheet.

To get to the Caltrans web site, go to: http://www.dot.ca.gov

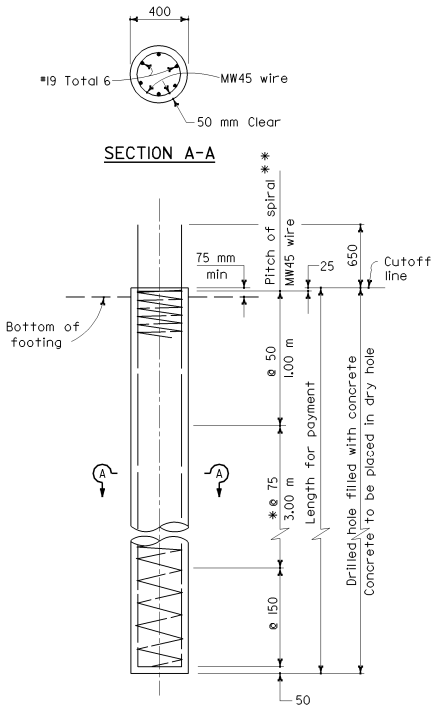

ELEVATION
400 AND 625 KILONEWTON
DESIGN CAPACITY

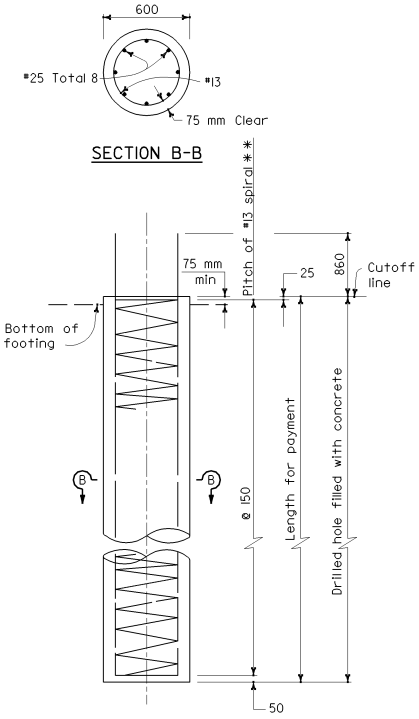

ELEVATION
900 KILONEWTON
DESIGN CAPACITY

* @ 50 at option of contractor

** Extend at 50 mm pitch to top of anchor piles and load test piles. For longitudinal reinforcement for anchor piles and load test piles, see "Load Test Pile Details (2)", Standard Plan B2-10.

NOTES

Reinforcement extending into footing shall be hooked as required to provide clearance to top of footing.

Lapped splices in spiral pile reinforcement shall be lapped at least 80 wire/bar diameters. Spiral pile reinforcement at splices and at ends shall be terminated with a 135° hook with a 150 mm tail hooked around a longitudinal bar.

Piles shall be extended only in accordance with details shown in the Project Plans.

DESIGN NOTES

REINFORCED CONCRETE

fy = 420 MPa

f'c = 28 MPa

DESIGN CAPACITY

400 & 625 KILONEWTON PILE

COMPRESSION:

625 kN (Service state)
1250 kN (Nominal axial strength)

TENSION:

250 kN (Service state)
625 kN (Nominal axial strength)

900 KILONEWTON PILE

COMPRESSION:

900 kN (Service state)
1800 kN (Nominal axial strength)

TENSION:

360 kN (Service state)
900 kN (Nominal axial strength)

STATE OF CALIFORNIA
DEPARTMENT OF TRANSPORTATION

400 mm AND 600 mm CAST-IN-DRILLED-HOLE CONCRETE PILE

NO SCALE

ALL DIMENSIONS ARE IN MILLIMETERS UNLESS OTHERWISE SHOWN

B2-3

06-17-04

Back to Table of Contents

SECTION V-V

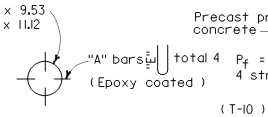

SECTION W-W

PP = Steelpipe pile

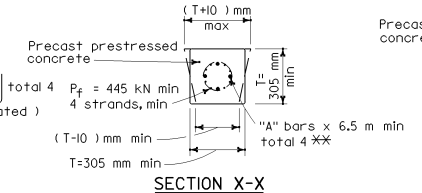

SECTION X-X

✱✱To be in place when pile is cast

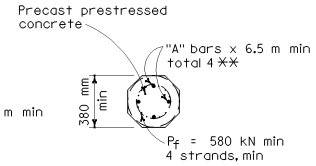

SECTION Y-Y

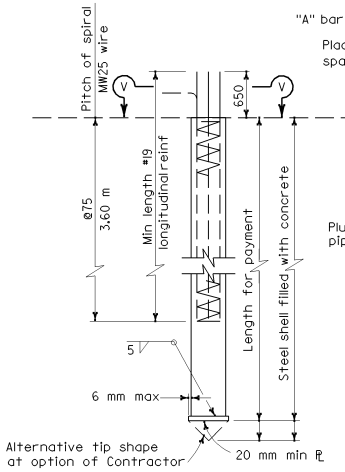

ALTERNATIVE "V"

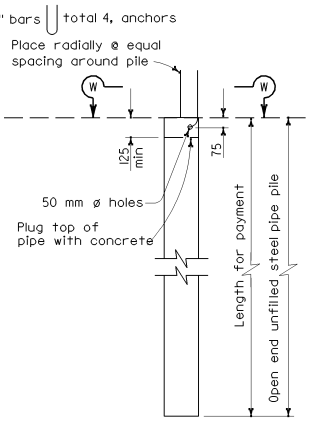

ALTERNATIVE "W"

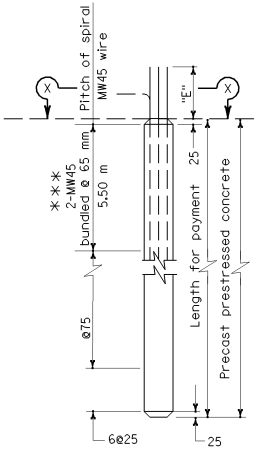

ALTERNATIVE "X"

✱✱✱ MW 70 at 50 may be substituted

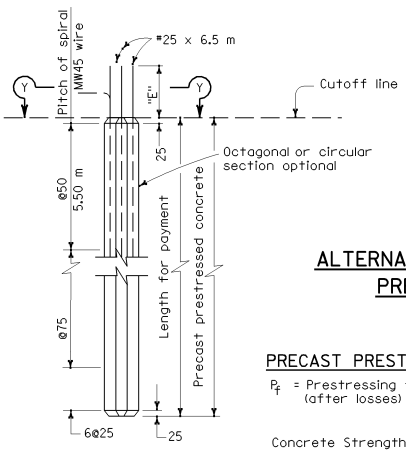

ALTERNATIVE "Y"

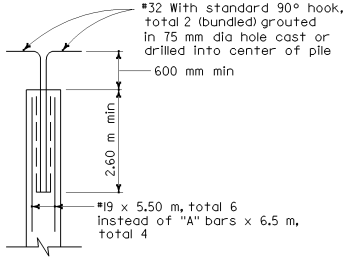

ALTERNATIVE PILE ANCHOR FOR PRESTRESSED PILES

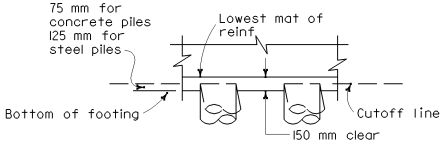

PILE EMBEDMENT

	Nomimal Resistance (Tension)*	
	Not Required	Required
"A" bars	#19	#25
"E" Dimension	650	860

*See Pile Data Table in the Project Plans for Nominal Resistance (Tension) Requirements

NOTES

1. Details are the same for both Class 400 and Class 625 piles unless noted otherwise.
2. At the Contractor's option, alternative steel pipe with at least the diameter and wall thickness shown on these plans may be used. The diameter shall not exceed 460 mm.
3. Pile reinforcement and steel pile anchor bars extending into a footing shall be hooked as required to provide clearance to top of footing. Piles shall be extended only in accordance with details shown elsewhere in these plans.
4. Lapped splices in spiral pile reinforcement shall be lapped 80 wire diameters minimum. Spiral pile reinforcement at splices and at ends shall be terminated by a 135° hook with 150 mm tail hooked around a longitudinal bar or strand.
5. 50 mm clearance to spiral reinforcement shall be maintained if section used is larger than the minimum section shown.
6. Maximum cutoff length at the top of the Alternative "X" and Alternative "Y" Piles is three (3) meters.
7. For longitudinal reinforcement and prestressing for anchor piles and load test piles, see "Load Test Pile Details (2)", Standard Plan B2-10.
8. Alternative "W" piles shall not be used for corrosive environments.

DESIGN NOTES

PRECAST PRESTRESSED PILES

P_f = Prestressing force (after losses)

If section used is larger than the minimum section shown, then "P_f" shall provide 5 Mpa minimum.

Concrete Strength: f'c @ 28 days= 42 MPa (Alternative "X")
35 MPa (Alternative "Y")
f'ci @ transfer= 28 MPa

REINFORCED CONCRETE

f'c = 28 Mpa
fy = 420 Mpa

STEEL PIPE PILE

Fy (Minimum yield strength) = 310 Mpa
Fu (Minimum tensile strength) = 455 Mpa

DESIGN CAPACITY

Class 400
Compression = 400 kN (Service state)
= 800 kN (Nominal axial strength)
Tension = 160 kN (Service state)
= 400 kN (Nominal axial strength)

Class 625
Compression = 625 kN (Service state)
= 1250 kN (Nominal axial strength)
Tension = 250 kN (Service state)
= 625 kN (Nominal axial strength)

STATE OF CALIFORNIA
DEPARTMENT OF TRANSPORTATION

PILE DETAILS
CLASS 400 AND CLASS 625

NO SCALE

ALL DIMENSIONS ARE IN MILLIMETERS UNLESS OTHERWISE SHOWN

B2-5

Caltrans Metric

DIST	COUNTY	ROUTE	KILOMETER POST TOTAL PROJECT	SHEET NO.	TOTAL SHEETS

REGISTERED CIVIL ENGINEER
July 1, 2004
PLANS APPROVAL DATE

REGISTERED PROFESSIONAL ENGINEER Daniel T. Adams No. 46476 Exp. 06-30-07 CIVIL STATE OF CALIFORNIA

The State of California or its officers or agents shall not be responsible for the accuracy or completeness of electronic copies of this plan sheet.

To get to the Caltrans web site, go to: http://www.dot.ca.gov

06-17-04

Back to Table of Contents

DIST	COUNTY	ROUTE	KILOMETER POST TOTAL PROJECT	SHEET NO.	TOTAL SHEETS

Caltrans Metric

REGISTERED CIVIL ENGINEER

July 1, 2004
PLANS APPROVAL DATE

REGISTERED PROFESSIONAL ENGINEER Daniel T. Adams No. 46476 Exp. 06-30-07 CIVIL STATE OF CALIFORNIA

The State of California or its officers or agents shall not be responsible for the accuracy or completeness of electronic copies of this plan sheet.

To get to the Caltrans web site, go to: http://www.dot.ca.gov

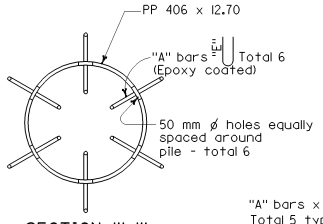

SECTION W-W

PP = Steel pipe pile

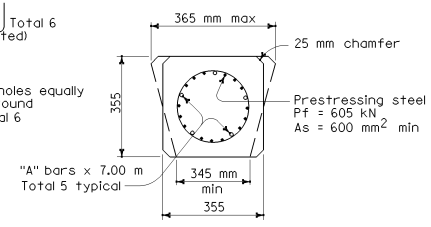

SECTION X-X

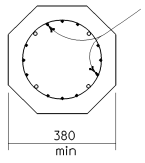

SECTION Y-Y

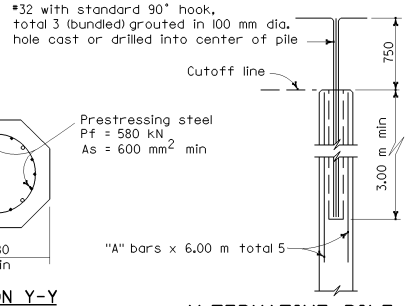

ALTERNATIVE PILE ANCHOR FOR PRESTRESSED PILE

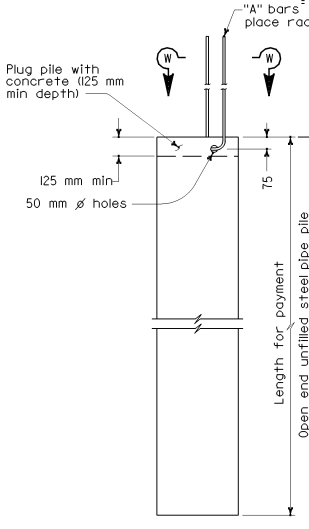

ALTERNATIVE "W"

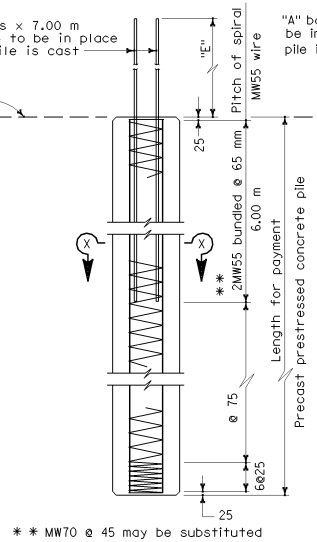

** MW70 @ 45 may be substituted

ALTERNATIVE "X"

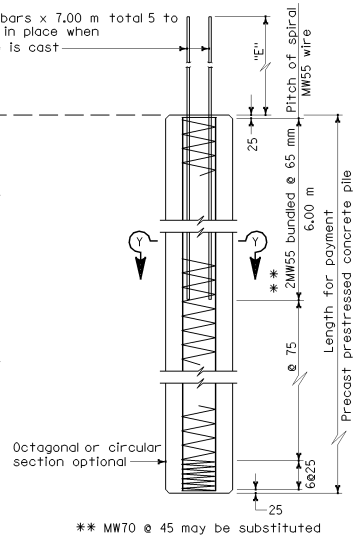

** MW70 @ 45 may be substituted

ALTERNATIVE "Y"

	Nomimal Resistance (Tension)*	
	Not Required	Required
"A" bars	#19	#25
"E" Dimension	650	860

*See Pile Data Table in the Project Plans for Nominal Resistance (Tension) Requirements

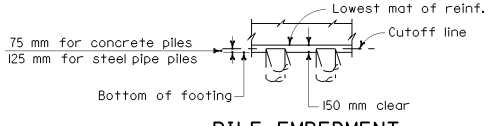

PILE EMBEDMENT

DESIGN NOTES

DESIGN CAPACITY :

Compression = 900 kN (Service state)
= 1800 kN (Nominal axial strength)
Tension = 360 kN (Service state)
= 900 kN (Nominal axial strength)

REINFORCED CONCRETE

f'_c = 28 MPa
f_y = 420 MPa

PRECAST PRESTRESSED PILES

Pf = Prestress Force (After losses)
Concrete Strength f'_c @ 28 days = 48 MPa
f'_{ci} @ transfer = 28 MPa

STEEL PIPE PILE

Fy (minimum yield strength) = 310 MPa
Fu (minimum tensile strength) = 455 MPa

NOTES

1. Pile reinforcement extending into footing shall be hooked as required to provide clearance to top of footing.
2. Lapped splices in spiral pile reinforcement shall be lapped 80 wire diameters minimum. Spiral pile reinforcement at splices and at ends shall be terminated by a 135° hook with 150 mm tail hooked around a longitudinal bar or strand
3. At the Contractor's option, alternative steel pipe with at least the diameter and wall thickness shown on these plans may be used. The diameter shall not exceed 460 mm.
4. Alternative "W" piles shall not be used for corrosive environments.
5. Maximum cut-off length at the top of the Alternative "X" and Alternative ''Y'' piles is three (3) meters.

STATE OF CALIFORNIA
DEPARTMENT OF TRANSPORTATION

PILE DETAILS CLASS 900

NO SCALE

ALL DIMENSIONS ARE IN MILLIMETERS UNLESS OTHERWISE SHOWN

B2-8

06-17-04

Back to Table of Contents

DIST	COUNTY	ROUTE	KILOMETER POST TOTAL PROJECT	SHEET NO.	TOTAL SHEETS

Caltrans Metric

REGISTERED CIVIL ENGINEER

July 1, 2004
PLANS APPROVAL DATE

REGISTERED PROFESSIONAL ENGINEER Daniel T. Adams No. 46476 Exp. 06-30-07 CIVIL STATE OF CALIFORNIA

The State of California or its officers or agents shall not be responsible for the accuracy or completeness of electronic copies of this plan sheet.

To get to the Caltrans web site, go to: http://www.dot.ca.gov

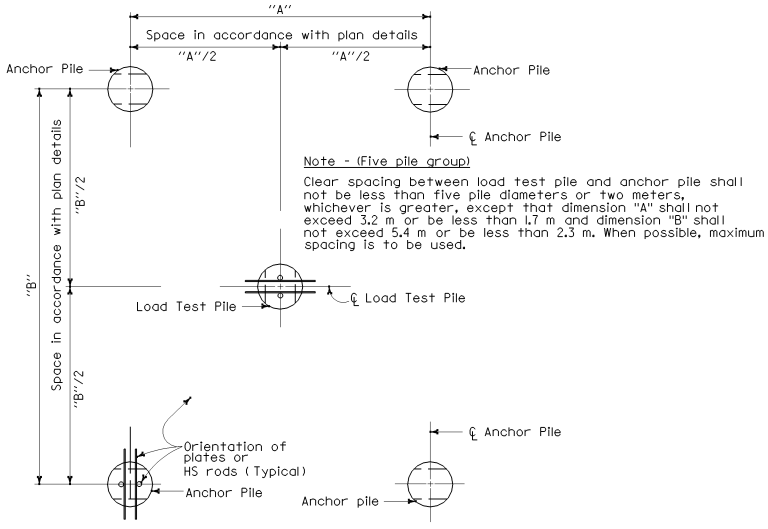

PLAN

Note - (Five pile group)

Clear spacing between load test pile and anchor pile shall not be less than five pile diameters or two meters, whichever is greater, except that dimension "A" shall not exceed 3.2 m or be less than 1.7 m and dimension "B" shall not exceed 5.4 m or be less than 2.3 m. When possible, maximum spacing is to be used.

Note - (Three pile group)

Clear spacing between load test pile and anchor pile shall not be less than five pile diameters or two meters, whichever is greater, except that "B" shall not exceed 5.4 m or be less than 2.0 m. When possible, maximum spacing is to be used.

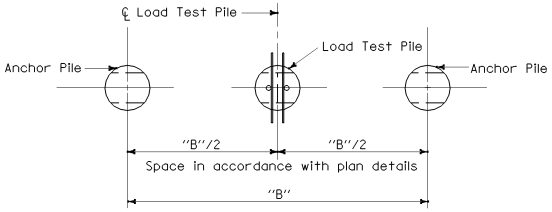

PLAN

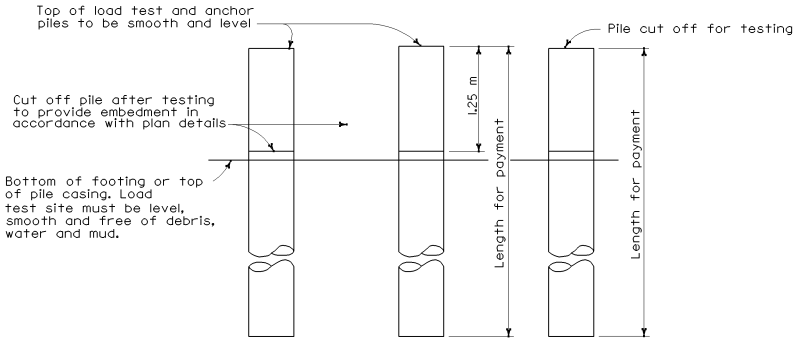

ANCHOR PILE LOAD TEST PILE ANCHOR PILE

ELEVATION

FIVE - PILE LOAD TEST PILE GROUP

(FOR COMPRESSION - TENSION PILE LOAD TESTS)

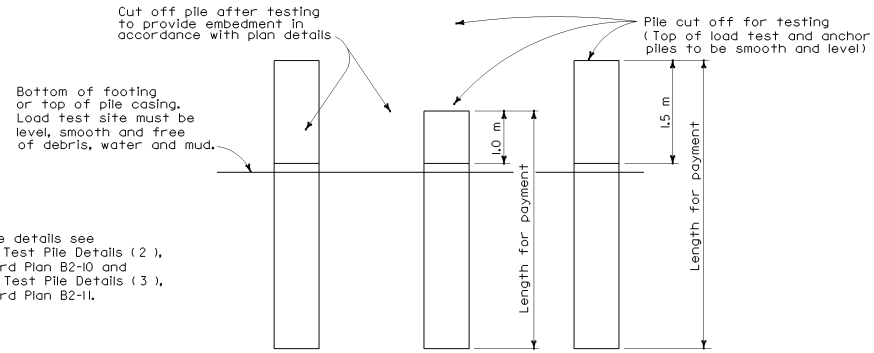

Note: For pile details see "Load Test Pile Details (2), Standard Plan B2-10 and "Load Test Pile Details (3), Standard Plan B2-11.

ANCHOR PILE LOAD TEST PILE ANCHOR PILE

ELEVATION

THREE - PILE LOAD TEST PILE GROUP

(FOR TENSION PILE LOAD TESTS ONLY)

STATE OF CALIFORNIA
DEPARTMENT OF TRANSPORTATION

LOAD TEST PILE DETAILS (1)

NO SCALE

ALL DIMENSIONS ARE IN MILLIMETERS UNLESS OTHERWISE SHOWN

B2-9

2004 Std PLAN B2-9

04-08-04

Back to Table of Contents

DIST	COUNTY	ROUTE	KILOMETER POST TOTAL PROJECT	SHEET NO.	TOTAL SHEETS

Caltrans Metric

REGISTERED CIVIL ENGINEER

July 1, 2004
PLANS APPROVAL DATE

REGISTERED PROFESSIONAL ENGINEER Daniel T. Adams No. 46476 Exp. 06-30-07 CIVIL STATE OF CALIFORNIA

The State of California or its officers or agents shall not be responsible for the accuracy or completeness of electronic copies of this plan sheet.

To get to the Caltrans web site, go to: http://www.dot.ca.gov

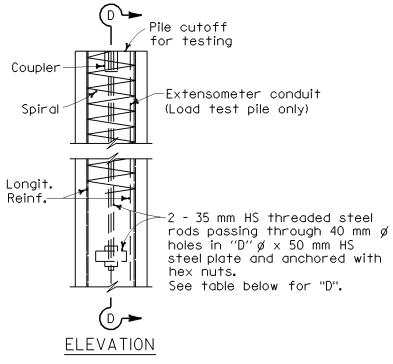

ELEVATION

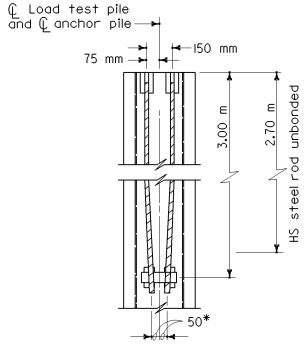

SECTION D-D

*38 mm for Alt "X"

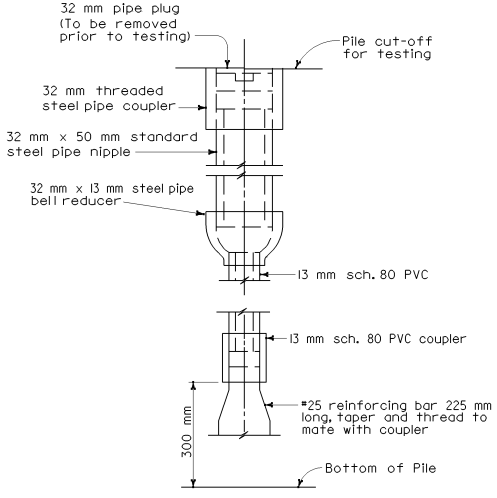

EXTENSOMETER CONDUIT DETAILS

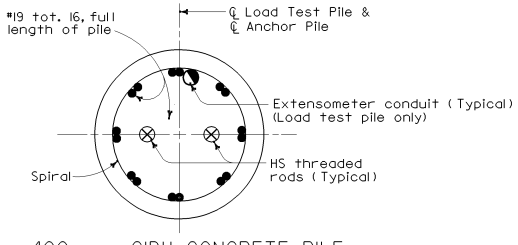

400 mm CIDH CONCRETE PILE

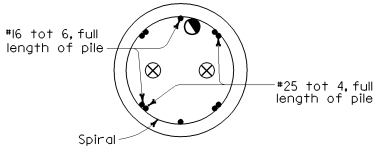

ALTERNATIVE "V"

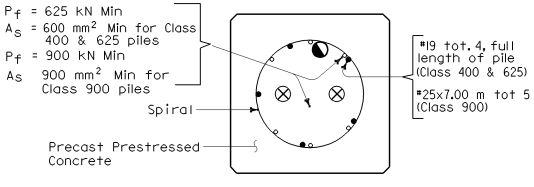

ALTERNATIVE "X"

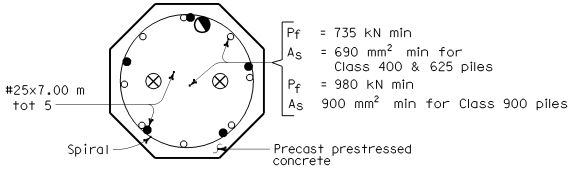

ALTERNATIVE "Y"

CONCRETE PILE DETAILS

PILE TYPE	"D" (mm)	MAXIMUM TENSILE TEST FORCE PER PILE
Class 400 & 625 Alt "V","Y"	175	935 kilonewtons
Class 400 & 625 Alt "X"	150	935 kilonewtons
Class 900 Alt "X","Y"	170	1350 kilonewtons
CIDH	200	1350 kilonewtons

NOTES:

1. For details not shown see applicable pile details shown elsewhere in the Project Plans.
2. For the additional top 1.25 meters of pile for testing, the spiral reinforcement shall be the same size and placed at the same pitch as detailed for the top of piles shown elsewhere in the Project Plans.
3. Details applicable for load test and anchor piles.

STATE OF CALIFORNIA
DEPARTMENT OF TRANSPORTATION

LOAD TEST PILE DETAILS (2)

NO SCALE

ALL DIMENSIONS ARE IN MILLIMETERS UNLESS OTHERWISE SHOWN

B2-10

04-08-04

Back to Table of Contents

DIST	COUNTY	ROUTE	KILOMETER POST TOTAL PROJECT	SHEET NO.	TOTAL SHEETS

Caltrans Metric

REGISTERED CIVIL ENGINEER

July 1, 2004
PLANS APPROVAL DATE

REGISTERED PROFESSIONAL ENGINEER Daniel T. Adams No. 46476 Exp. 06-30-07 CIVIL STATE OF CALIFORNIA

The State of California or its officers or agents shall not be responsible for the accuracy or completeness of electronic copies of this plan sheet.

To get to the Caltrans web site, go to: http://www.dot.ca.gov

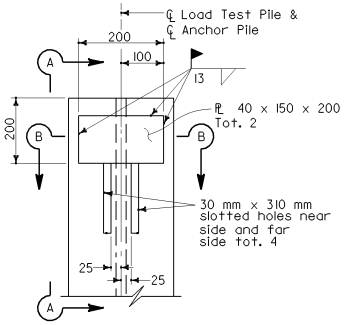

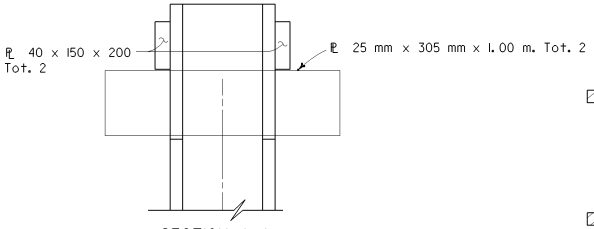

SECTION A-A

SECTION B-B

Maximum Tensile Test Force Per Pile : HP 250x62= 800 kN
HP 250x85= 1090 kN
HP 360x132= 1350 kN

STEEL H-PILE DETAILS

Note

Alignment of slots and 40 mm PL 's shall permit a PL 25 mm x 305 mm x 1.00 m to pass through pile parallel to ℄ web of pile and achieve a snug fit. Details applicable for load test and anchor piles. Slots to be cut after piles are driven.

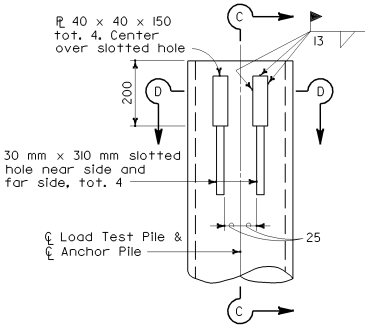

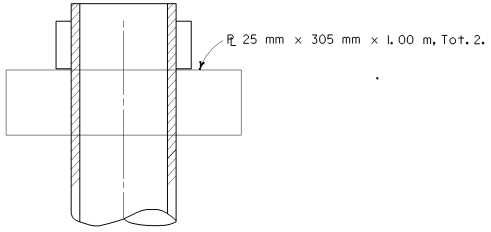

SECTION C-C

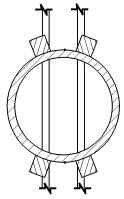

SECTION D-D

Maximum Tensile Test Force Per Pile : Class 400 (PP 360 X 9.53)= 800 kN
Class 625 (PP 360 x 11.12)= 1245 kN
Class 900 (PP 406 x 12.70)= 1350 kN

ALTERNATIVE "W" STEEL PIPE - PILE DETAILS

Note

Alignment of slots and 40 mm PL 's shall permit a PL 25 mm x 305 mm x 1.00 m to pass through pile.
Details applicable for load test and anchor piles.
Slots to be cut after piles are driven.

STATE OF CALIFORNIA
DEPARTMENT OF TRANSPORTATION

LOAD TEST PILE DETAILS (3)

NO SCALE

ALL DIMENSIONS ARE IN MILLIMETERS UNLESS OTHERWISE SHOWN

B2-11

04-08-04

Back to Table of Contents

Caltrans Metric

DIST	COUNTY	ROUTE	KILOMETER POST TOTAL PROJECT	SHEET NO.	TOTAL SHEETS

REGISTERED CIVIL ENGINEER

July 1, 2004
PLANS APPROVAL DATE

REGISTERED PROFESSIONAL ENGINEER Overcomer Y. Hor No. 45803 Exp. 12-31-06 CIVIL STATE OF CALIFORNIA

The State of California or its officers or agents shall not be responsible for the accuracy or completeness of electronic copies of this plan sheet.

To get to the Caltrans web site, go to: http://www.dot.ca.gov

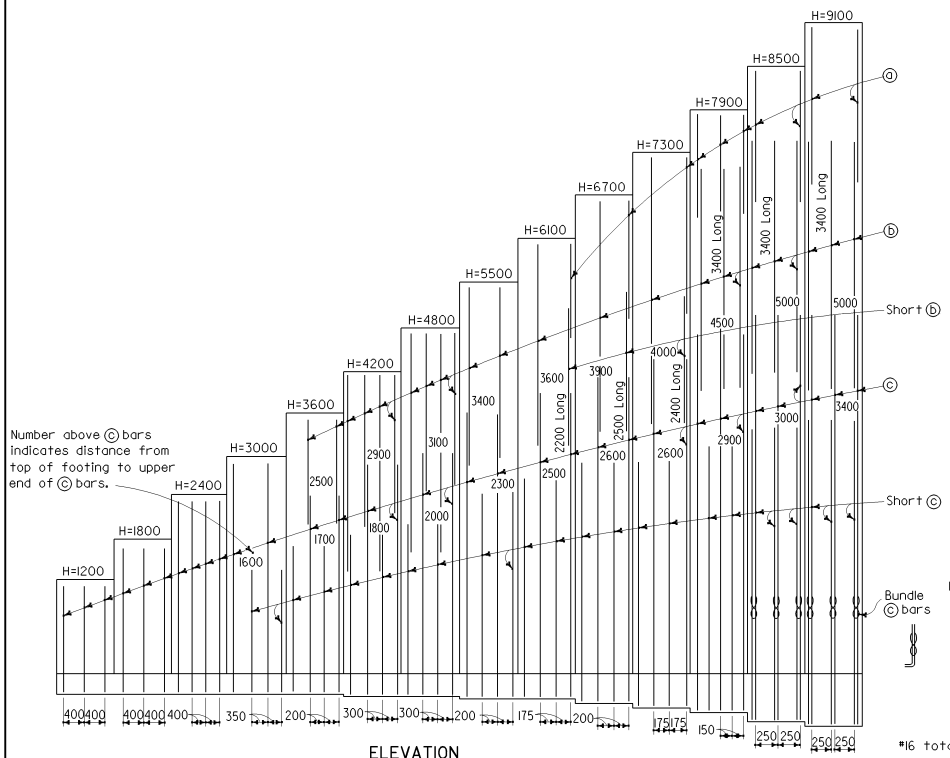

ELEVATION

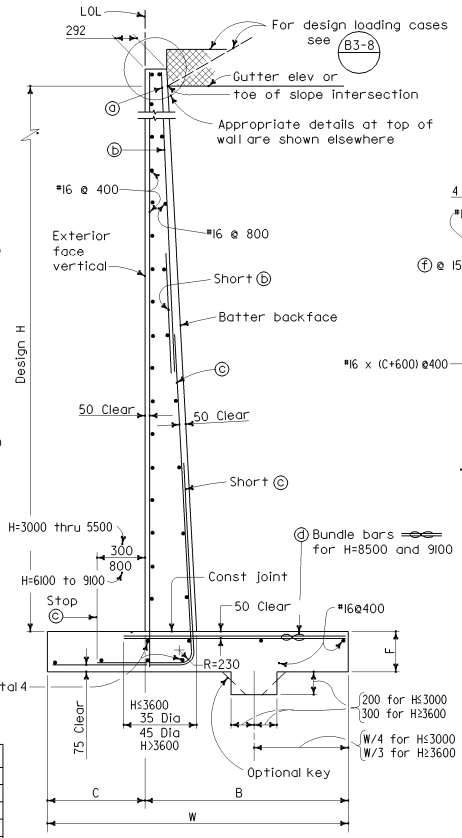

SPREAD FOOTING SECTION

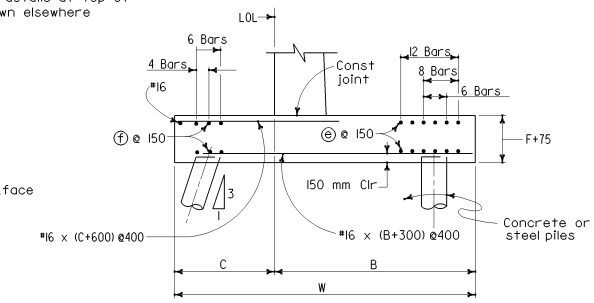

400 kN PILE FOOTING SECTION

Reinforcement detailed is to be placed in addition to that shown for spread footing. All piles not shown, see Pile Layout on other sheets.

TABLE OF REINFORCING STEEL DIMENSIONS AND DATA

Design H		1200	1800	2400	3000	3600	4200	4800	5500	6100	6700	7300	7900	8500	9100
W		1000	1300	1600	1900	2200	2450	2750	3050	3350	3700	4050	4350	4650	5100
C		300	400	500	600	700	800	900	1000	1100	1200	1350	1450	1550	1650
B		700	900	1100	1300	1500	1650	1850	2050	2250	2500	2700	2900	3100	3450
F		400	400	400	400	400	450	450	450	450	500	550	650	750	850
Batter		100:4	100:4	100:4	100:4	100:4	100:4	100:4	100:4	100:4	100:4	100:5	100:6	100:6	100:7
ⓐ bars		—	—	—	—	—	—	—	—	#16@700	#16@800	#16@700	#16@300	#16@500	#25@500
ⓑ bars		—	—	—	—	#16@400	#16@300	#16@300	#19@400	#25@350	#25@400	#25@350	#25@300	#25@250	#29@250
ⓒ bars		#16@400	#16@400	#16@400	#19@350	#19@200	#25@300	#29@300	#29@200	#29@175	#36@200	#36@175	#36@150	#36@250 ⧸⧸	#36@250 ⧸⧸
ⓓ bars		#16@400	#16@400	#16@400	#16@350	#16@200	#25@300	#29@300	#29@200	#29@175	#36@200	#36@175	#36@150	#36@250 ⧸⧸	#36@250 ⧸⧸
Total ⓔ bars		6-#19	6-#19	6-#19	12-#19	12-#19	12-#19	12-#19	8-#19	8-#19	8-#19	6-#19	6-#19	6-#19	6-#19
Total ⓕ bars		—	—	—	6-#19	6-#19	6-#19	6-#19	6-#19	6-#19	6-#19	4-#16	4-#16	4-#16	4-#16
Loading Case I	Toe Pressure kPa	80	90	105	120	135	160	170	190	205	220	235	255	275	300
Loading Case II	Toe Pressure kPa	55	70	95	110	130	160	175	200	225	265	285	310	340	360
Loading Case III	Toe Pressure kPa	65	80	100	120	140	165	180	205	230	260	280	310	345	360

⧸⧸ Denotes a bundle of 2 bars

NOTES

1. For details not shown and drainage notes see B3-8
2. For wall stem joint details see B0-3 3-3 and B0-3 3-4
3. For pile footing for design H=1200 use same footing dimensions as for design H=1800.

STATE OF CALIFORNIA
DEPARTMENT OF TRANSPORTATION

RETAINING WALL TYPE 1 H=1200 THROUGH 9100 mm

NO SCALE

ALL DIMENSIONS ARE IN MILLIMETERS UNLESS OTHERWISE SHOWN

B3-1

03-26-04

Back to Table of Contents

Caltrans Metric

DIST	COUNTY	ROUTE	KILOMETER POST TOTAL PROJECT	SHEET NO.	TOTAL SHEETS

REGISTERED CIVIL ENGINEER

July 1, 2004
PLANS APPROVAL DATE

REGISTERED PROFESSIONAL ENGINEER Overcomer Y. Hor No. 45803 Exp. 12-31-06 CIVIL STATE OF CALIFORNIA

The State of California or its officers or agents shall not be responsible for the accuracy or completeness of electronic copies of this plan sheet.

To get to the Caltrans web site, go to: http://www.dot.ca.gov

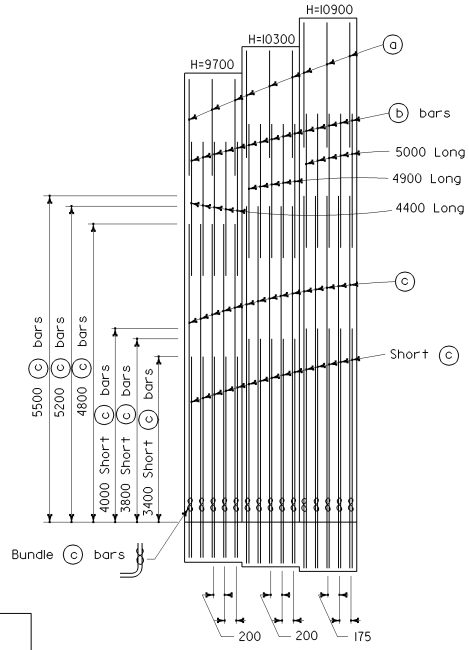

ELEVATION

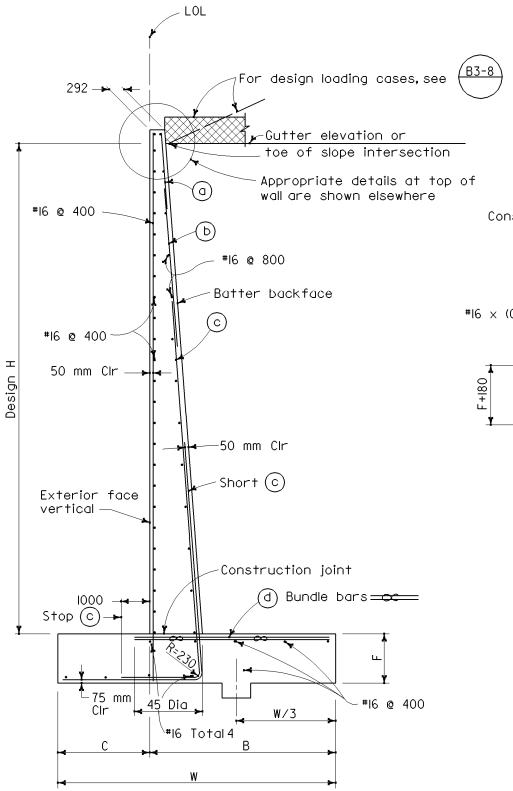

SPREAD FOOTING SECTION

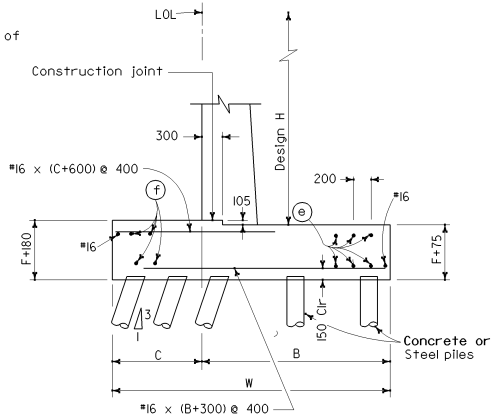

400 kN PILE FOOTING SECTION

Reinforcement detailed is to be placed in addition to that shown for spread footing. See Pile Layout on other sheets.

NOTES

1. For details not shown and drainage notes see B3-8
2. For wall stem joint details, see B0-3 3-3 and B0-3 3-4
3. At ⓒ and Short ⓒ bars:
   H ≤ 1800 mm, no splices are allowed within 500 mm above the top of footing.
   H > 1800 mm, no splices are allowed within H/4 above the top of footing.

TABLE OF REINFORCING STEEL, DIMENSIONS AND DATA

Design H		9700	10300	10900
W		5600	5900	6200
C		1800	1900	2000
B		3800	4000	4200
F Spread Footing		1000	1100	1200
Batter		100:8	100:8	100:8
ⓐ bars		#19@400	#19@400	#19@350
ⓑ bars		#29@200	#29@200	#29@175
ⓒ bars		#36@200 ∞	#36@200 ∞	#36@175 ∞
ⓓ bars		#29@200 ∞	#29@200 ∞	#29@175 ∞
Total ⓔ bars		6-#19	6-#19	6-#19
Total ⓕ bars		4-#16	4-#16	4-#16
Loading Case I	H Comp kN	110	125	140
	V Comp kN	265	300	330
	Toe Pr. kPa	300	325	350
Loading Case II	H Comp kN	165	185	210
	V Comp kN	365	410	455
	Toe Pr. kPa	370	400	435
Loading Case III	H Comp kN	130	145	160
	V Comp kN	295	330	370
	Toe Pr. kPa	380	400	425

∞ Denotes a bundle of 2 bars.

STATE OF CALIFORNIA
DEPARTMENT OF TRANSPORTATION

RETAINING WALL TYPE 1 H=9700 THROUGH 10 900 mm

NO SCALE

ALL DIMENSIONS ARE IN MILLIMETERS UNLESS OTHERWISE SHOWN

B3-2

03-26-04

Back to Table of Contents

DIST	COUNTY	ROUTE	KILOMETER POST TOTAL PROJECT	SHEET NO.	TOTAL SHEETS

Caltrans Metric

REGISTERED CIVIL ENGINEER

July 1, 2004
PLANS APPROVAL DATE

REGISTERED PROFESSIONAL ENGINEER Overcomer Y. Hor No. 45803 Exp. 12-31-06 CIVIL STATE OF CALIFORNIA

The State of California or its officers or agents shall not be responsible for the accuracy or completeness of electronic copies of this plan sheet.

To get to the Caltrans web site, go to: http://www.dot.ca.gov

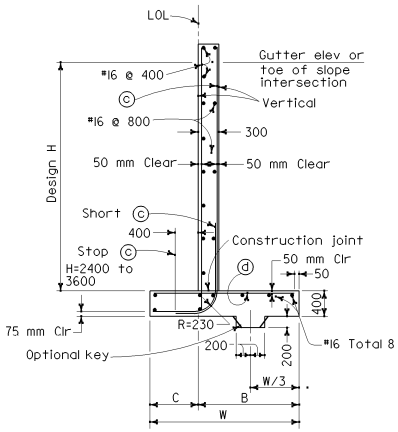

SPREAD FOOTING SECTION

Place concrete in toe, against undisturbed material, except as permitted by the Engineer.

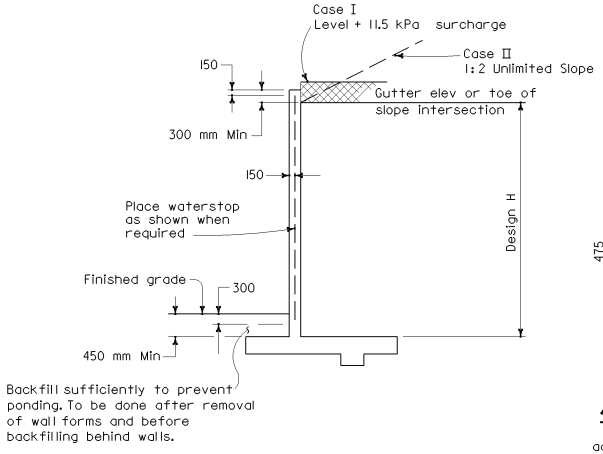

DESIGN

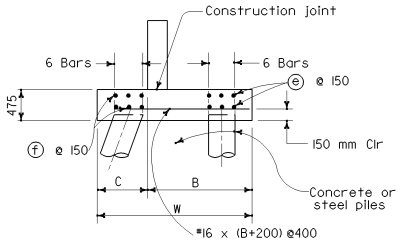

400 kN PILE FOOTING SECTION

Reinforcement detailed is to be placed in addition to that shown for spread footing. All piles not shown, see Pile Layout on other sheets. For pile footing for Design H=1200 use same footing dimensions as for Design H=1800.

TABLE OF REINFORCING STEEL, DIMENSIONS AND DATA					
Design H	1200	1800	2400	3000	3600
W	1000	1300	1600	1900	2200
C	300	400	500	600	700
B	700	900	1100	1300	1500
c bars	#16@400	#16@400	#16@200	#19@200	#25@200
d bars	#16@400	#16@400	#16@400	#16@200	#19@200
Total e bars	6-#19	6-#19	6-#19	6-#25	6-#25
Total f bars	—	—	—	6-#19	6-#19
Case I-Toe Press. kPa	75	95	110	125	135
Case II-Toe Press. kPa	50	70	90	110	130

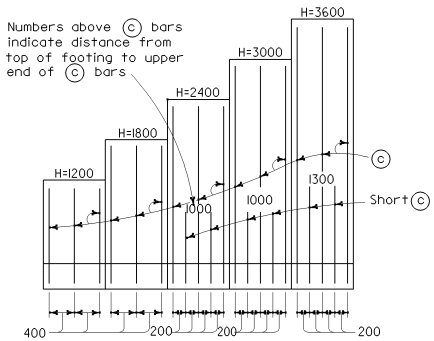

ELEVATION

NOTES

1. Retaining Wall Type 1A designed for Design Loading Cases I and II only.
2. For design notes, drainage notes and other details, See B3-8.
3. For wall stem joint details, see B0-3/3-3 and B0-3/3-4.
4. At c and Short c bars:
   H ≤ 1800 mm, no splices are allowed within 500 mm above the top of footing.
   H > 1800 mm, no splices are allowed within H/4 above the top of footing.

STATE OF CALIFORNIA
DEPARTMENT OF TRANSPORTATION

RETAINING WALL TYPE 1A

NO SCALE

ALL DIMENSIONS ARE IN MILLIMETERS UNLESS OTHERWISE SHOWN

B3-3

2004 Std PLAN B3-3

03-26-04

Back to Table of Contents

DIST	COUNTY	ROUTE	KILOMETER POST TOTAL PROJECT	SHEET NO.	TOTAL SHEETS

Caltrans Metric

REGISTERED CIVIL ENGINEER

July 1, 2004
PLANS APPROVAL DATE

REGISTERED PROFESSIONAL ENGINEER Overcomer Y. Hor No. 45803 Exp. 12-31-06 CIVIL STATE OF CALIFORNIA

The State of California or its officers or agents shall not be responsible for the accuracy or completeness of electronic copies of this plan sheet.

To get to the Caltrans web site, go to: http://www.dot.ca.gov

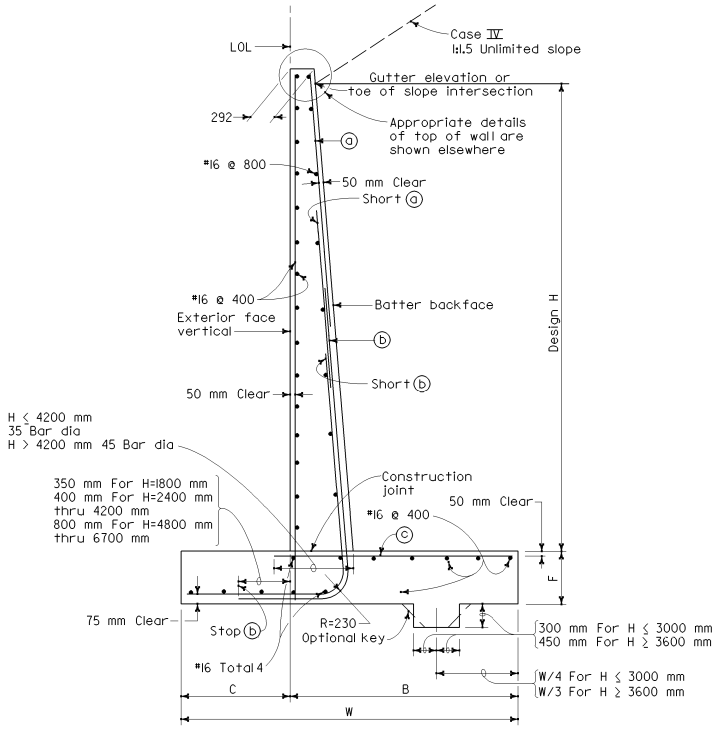

SPREAD FOOTING SECTION

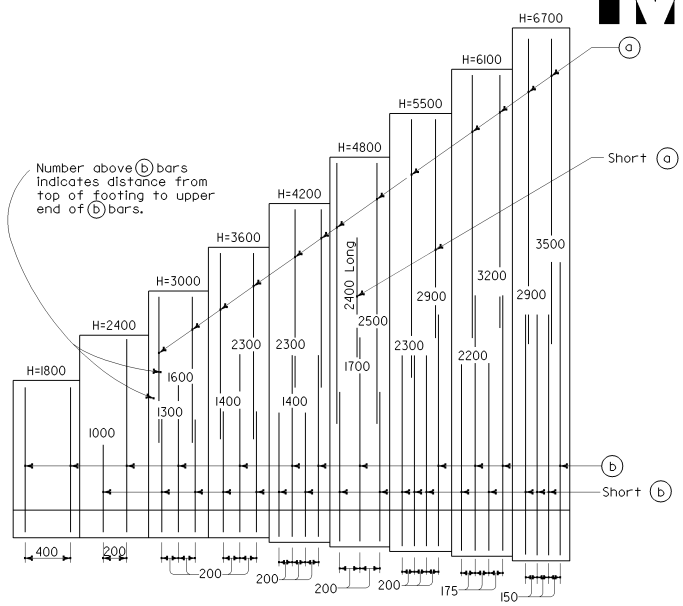

ELEVATION

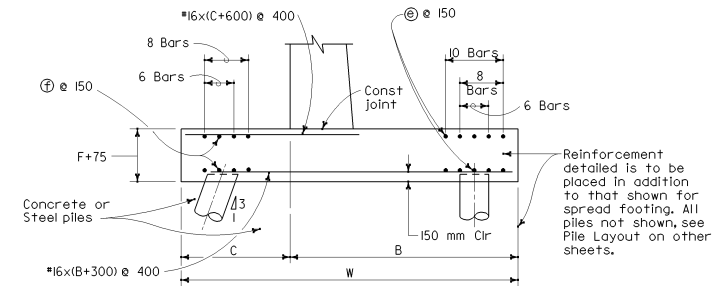

400 kN PILE FOOTING SECTION

TABLE OF REINFORCING STEEL, DIMENSIONS AND DATA

Design H	1800	2400	3000	3600	4200	4800	5500	6100	6700
W	1200	1600	2000	2500	3000	3500	4000	4600	5400
C	400	500	550	650	750	850	950	1150	1350
B	800	1100	1450	1850	2250	2650	3050	3450	4050
F	400	400	400	400	450	550	650	750	850
Batter	100:4	100:4	100:4	100:4	100:4	100:4	100:5	100:6	100:7
ⓐ bars			#16@400	#16@400	#19@400	#19@200	#25@400	#25@350	#25@300
ⓑ bars	#16@400	#16@200	#19@200	#25@200	#29@200	#36@200	#36@200	#36@175	#36@150
ⓒ bars	#16@400	#16@400	#19@400	#19@200	#19@200	#25@200	#25@200	#25@175	#25@150
Total ⓔ bars	6-#19	6-#19	8-#25	8-#25	8-#25	8-#25	10-#19	10-#19	10-#19
Total ⓕ bars			8-#19	8-#19	8-#19	8-#19	6-#19	6-#19	6-#19
Toe Press KPa	125	155	185	215	240	275	315	335	335

NOTES

1. For design notes, drainage notes and other details, See (B3-8).
2. For wall stem joint details, see (B0-3 / 3-3) and (B0-3 / 3-4).
3. At ⓑ and Short ⓑ bars:
   H ≤ 1800 mm, no splices are allowed within 500 mm above the top of footing.
   H > 1800 mm, no splices are allowed within H/4 above the top of footing.

STATE OF CALIFORNIA
DEPARTMENT OF TRANSPORTATION

RETAINING WALL TYPE 2

NO SCALE

ALL DIMENSIONS ARE IN MILLIMETERS UNLESS OTHERWISE SHOWN

B3-4

03-26-04

Back to Table of Contents

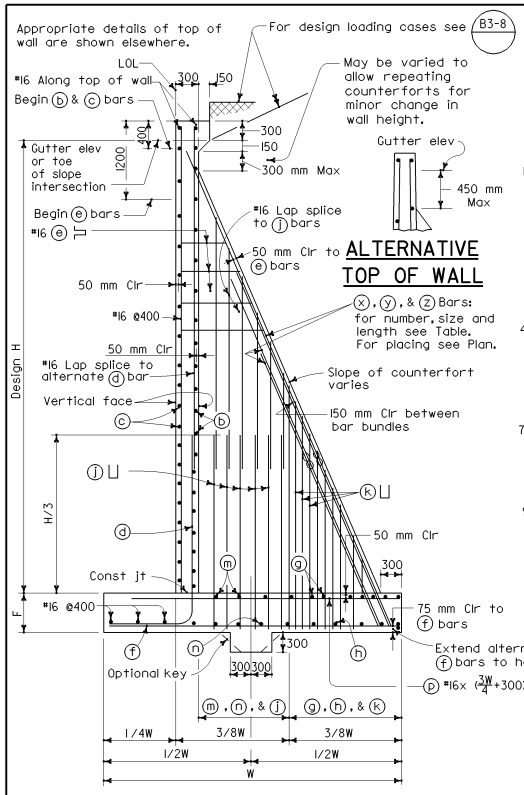

ALTERNATIVE TOP OF WALL

(x), (y), & (z) Bars: for number, size and length see Table. For placing see Plan.

SPREAD FOOTING SECTION

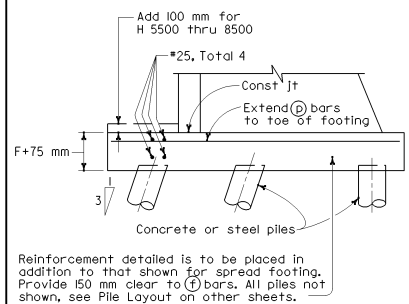

400 kN PILE FOOTING SECTION

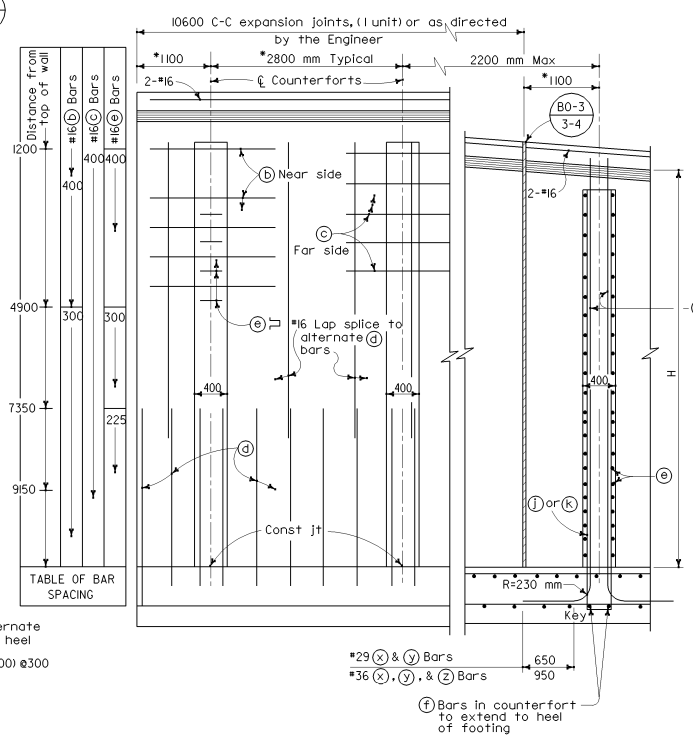

ELEVATION

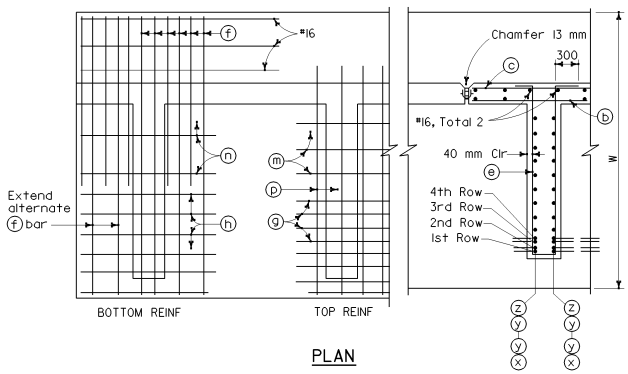

PLAN

*Dimensions 2800 mm and 1100 mm may be decreased proportionally but not increased without a special design.

Use footing dimensions and reinforcing and stem reinforcing in any unit as determined by maximum Design "H" in that unit. Use counterfort (x), (y), and (z) bars as determined by "H" at ℄ counterfort.

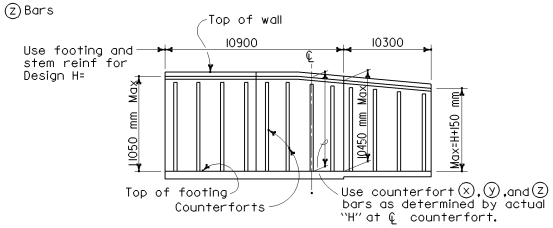

TABLE OF REINFORCING STEEL, DIMENSIONS AND DATA

Design H	5500	6100	6700	7300	7900	8500	9100	9700	10300	10900
W	3500	3800	4100	4450	4750	5050	5350	5650	5950	6250
F	400	400	450	450	500	550	650	700	750	850
(d) Bars, counterfort stem	#16@300	#16@300	#16@275	#16@225	#16@200	#16@175	#19@225	#19@200	#25@275	#25@250
(f) Bars, bottom toe	#19@300	#19@200	#25@275	#25@225	#25@200	#25@175	#25@225	#25@200	#29@275	#29@250
(f) Bars, length } Alt	1700	1900	2100	2400	2500	2600	2700	2800	3000	3100
(f) Bars, length } Alt	3350	3650	3950	4300	4600	4900	5200	5500	5800	6100
(g) Bars, top of heel	#19@200	—	—	—	—	—	—	—	—	↑
(h) Bars, bottom heel	#19@200	—	—	—	—	—	—	—	—	↑
(j) Bars, counterfort heel	#16@400	#16@400	#16@400	#16@350	#16@300	#16@300	#19@400	#19@400	#19@350	#19@350
(k) Bars, counterfort heel	#16@200	#16@200	#16@200	#16@175	#16@150	#16@150	#19@200	#19@200	#19@175	#19@175
(m) Bars, top of heel	#16@250	—	—	—	—	—	—	—	—	↑
(n) Bars, bottom of heel	#16@350	—	—	—	—	—	—	—	—	↑
(x) Bar	2-#29	2-#29	2-#29	2-#29	2-#36	2-#36	2-#36	2-#36	2-#36	2-#36
(x) Bar, length	6100	6800	7400	8100	8800	9400	10100	10700	11400	11900
(y) Bar	2-#29	2-#29	4-#29	4-#29	4-#36	4-#36	4-#36	4-#36	4-#36	4-#36
(y) Bar, length	2900	3700	4400	4900	5500	6300	6900	7600	8100	8500
(z) Bar	—	—	—	—	—	—	2-#36	2-#36	2-#36	2-#36
(z) Bar, length	—	—	—	—	—	—	3600	3700	4500	5200
Toe Pressure kPa										
Loading Case I	165	180	200	215	235	260	285	305	325	350
Loading Case II	190	210	235	260	290	320	350	380	410	450
Loading case III	200	225	255	280	310	330	350	370	390	415

For H=5500 thru 8500 pile footing, see 400 kN Pile Footing Section.

NOTE

For design notes, drainage notes, and other details, see B3-8

Length of (x), (y), and (z) bars indicates distance from top of footing to upper end of bar measured along bar.

No other lap splices are allowed except as shown in the plans.

Caltrans Metric

DIST	COUNTY	ROUTE	KILOMETER POST TOTAL PROJECT	SHEET NO.	TOTAL SHEETS

REGISTERED CIVIL ENGINEER

July 1, 2004
PLANS APPROVAL DATE

REGISTERED PROFESSIONAL ENGINEER Overcomer Y. Hor No. 45803 Exp. 12-31-06 CIVIL STATE OF CALIFORNIA

The State of California or its officers or agents shall not be responsible for the accuracy or completeness of electronic copies of this plan sheet.

To get to the Caltrans web site, go to: http://www.dot.ca.gov

STATE OF CALIFORNIA
DEPARTMENT OF TRANSPORTATION

COUNTERFORT RETAINING WALL TYPE 3

NO SCALE

ALL DIMENSIONS ARE IN MILLIMETERS UNLESS OTHERWISE SHOWN

B3-5

06-08-04

Back to Table of Contents

Appropriate details of top of wall are shown elsewhere.

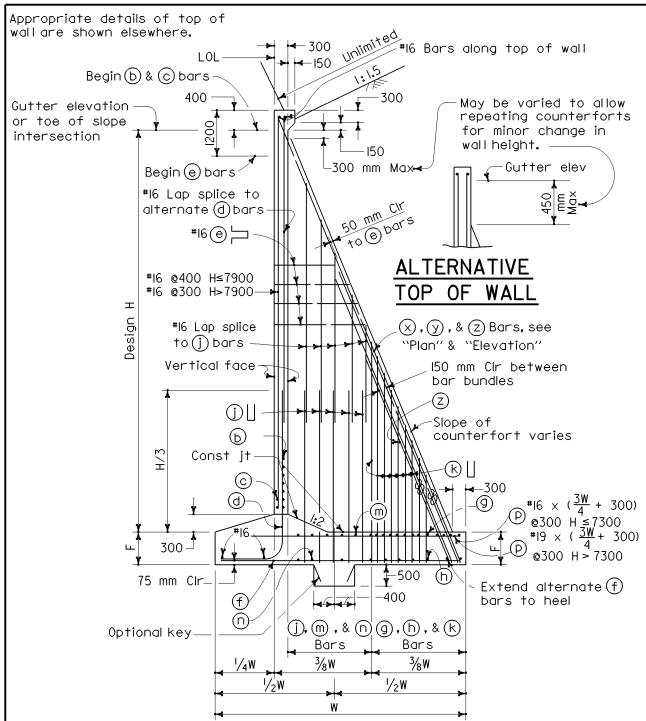

ALTERNATIVE TOP OF WALL

May be varied to allow repeating counterforts for minor change in wall height.

SPREAD FOOTING SECTION

TABLE FOR SPACING FOR ⓑ, ⓒ & ⓔ BARS			
Top of wall	ⓑ	ⓒ	ⓔ
600	400	400	
1200	400	400	
1800	400	400	400
2400	400	400	400
3000	300	400	400
3600	300	400	400
Distance below top of wall 4200	300	400	400
4900	300	400	300
5500	300	400	300
6100	300	400	300
6700	300	400	300
7300	300	400	200
7900	300	400	200
8500	300	400	200
9100	300	400	200

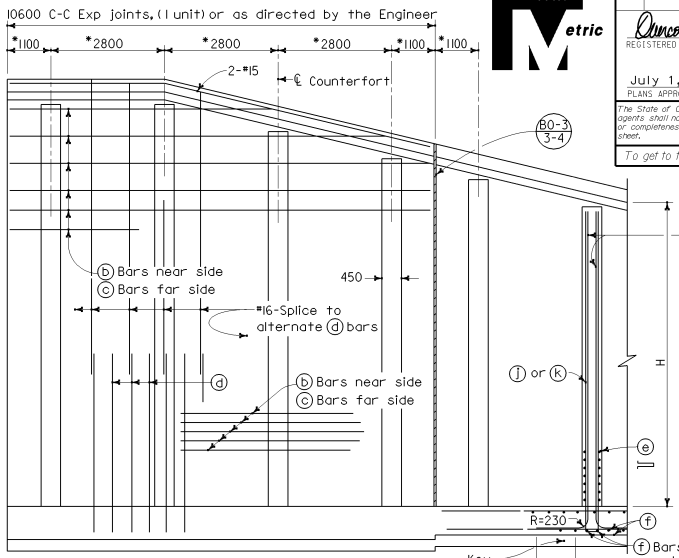

*Dimensions 2800 millimeters and 1100 millimeters may be decreased proportionally but not increased without a special design.

Use footing dimensions and reinforcing and stem reinforcing in any unit as determined by maximum Design "H" in that unit. Use counterfort ⓧ, ⓨ and ⓩ bars as determined by "H" at ℄ counterfort. See "Typical Layout Example" on B3-5.

ELEVATION

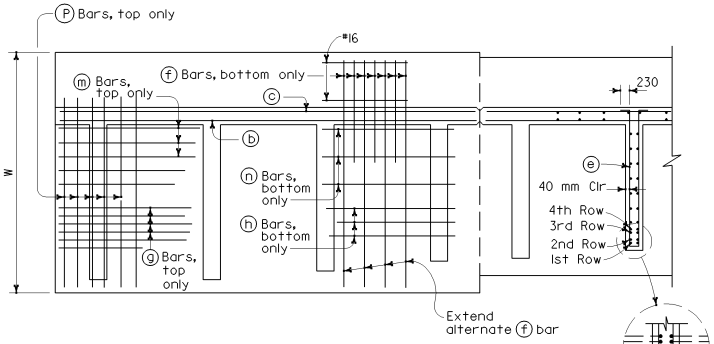

PLAN

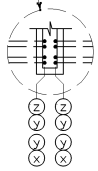

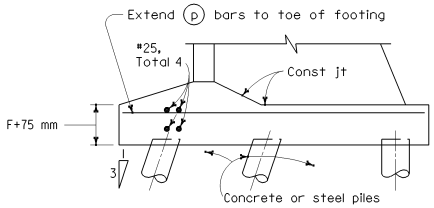

400 kN PILE FOOTING SECTION

Reinforcement detailed is to be placed in addition to that shown for spread footing. "Provide 150 mm clear to ⓕ bars". All piles not shown, see Pile Layout on other sheets.

TABLE OF REINFORCING STEEL, DIMENSIONS AND DATA							
Design H	5500	6100	6700	7300	7900	8500	9100
W	3950	4300	4750	5150	5600	5950	6400
F	550	650	650	650	700	700	800
ⓧ Bars, edge counterfort	2-#29	2-#29	2-#29	2-#36	2-#36	2-#36	2-#36
ⓧ Bars, length	6300	6900	7550	8200	8850	9550	10200
ⓨ Bars, edge counterfort	4-#29	4-#29	4-#29	4-#36	4-#36	4-#36	4-#36
ⓨ Bars, length	4000	4800	5400	6400	6700	6900	7900
ⓩ Bars, edge counterfort			2-#29	2-#36	2-#36	2-#36	2-#36
ⓩ Bars, length			3200	3700	4100	4200	5000
ⓑ Bars, back face wall	#16		See Table for spacing				
ⓒ Bars, front face wall	#16		See Table for spacing				
ⓓ Bars, wall face	#16 @200	#16 @175	#16 @175	#19 @175	#19 @150	#25 @200	#25 @200
ⓔ Stirrups counterfort	#16		See Table for spacing				
ⓕ Bars, toe	#16 @200	#16 @175	#16 @175	#16 @175	#16 @150	#19 @200	#19 @200
ⓕ Bars, length	1900	2200	2400	2600	2800	3000	3200
ⓙ Bars, counterfort heel	#16 @300	#16 @300	#16 @300	#19 @300	#19 @300	#19 @300	#19 @300
ⓚ Bars, counterfort heel	#16 @150	#16 @150	#16 @150	#19 @150	#19 @150	#19 @150	#19 @150
ⓜ Bars, top of heel	#19 @400	←					→
ⓖ Bars, top of heel	#19 @200	←					→
ⓝ Bars, bottom of heel	#16 @400	←					→
ⓗ Bars, bottom of heel	#16 @200	←					→
Toe Pressure, kPa	310	355	385	415	455	485	520

NOTES

For Design and Drainage notes and other details see B3-8.

Length of ⓧ, ⓨ and ⓩ bars indicates distance from top of footing to upper end of bar.

No other lap splices are allowed except as shown in the plans.

Caltrans Metric

DIST	COUNTY	ROUTE	KILOMETER POST TOTAL PROJECT	SHEET NO.	TOTAL SHEETS

REGISTERED CIVIL ENGINEER

July 1, 2004
PLANS APPROVAL DATE

REGISTERED PROFESSIONAL ENGINEER Overcomer Y. Hor No. 45803 Exp. 12-31-06 CIVIL STATE OF CALIFORNIA

The State of California or its officers or agents shall not be responsible for the accuracy or completeness of electronic copies of this plan sheet.

To get to the Caltrans web site, go to: http://www.dot.ca.gov

STATE OF CALIFORNIA
DEPARTMENT OF TRANSPORTATION

COUNTERFORT RETAINING WALL TYPE 4

NO SCALE

ALL DIMENSIONS ARE IN MILLIMETERS UNLESS OTHERWISE SHOWN

B3-6

06-07-04

Back to Table of Contents

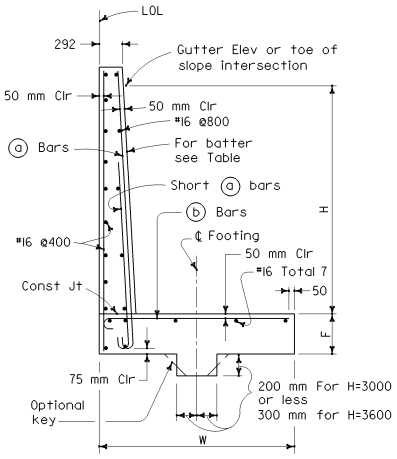

SPREAD FOOTING SECTION

NOTE

At ⓐ and Short ⓐ bars:

H ≤ 1800 mm, no splices are allowed within 500 mm above the top of footing.

H > 1800 mm, no splices are allowed within H/4 above the top of footing.

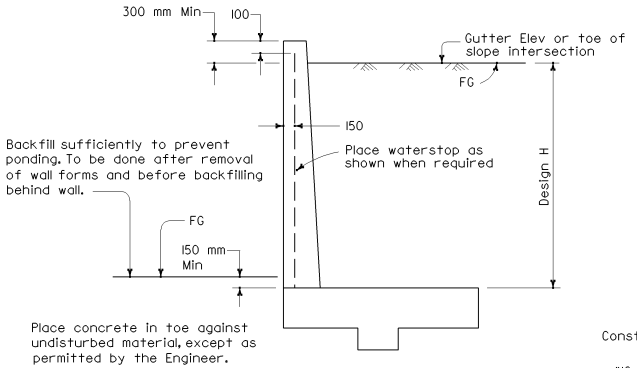

DESIGN

For drainage notes and other details, see B3-8

MAX PILE SPACING FOR 400 kN PILES

Design H	Front Row 1:3 Batter	Back Row Vertical
1200	5400	5400
1800	3600	5400
2400	2700	5400
3000	1800	3600
3600	1200	2400

For actual spacing, see Wall Layout.

Pile layout does not apply to Case IV conditions.

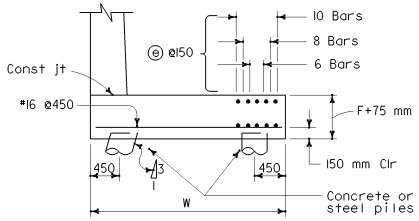

Reinforcement detailed is to be placed in addition to that shown for spread footings.

◉ For Design H=1200 use W=1550
All others from table

400 kN PILE FOOTING SECTION

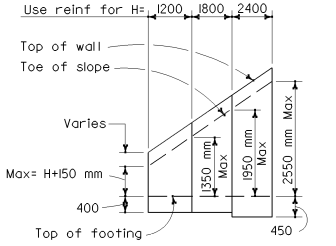

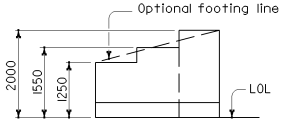

TYPICAL LAYOUT EXAMPLE

For joints required, see B0-3 3-3 & B0-3 3-4

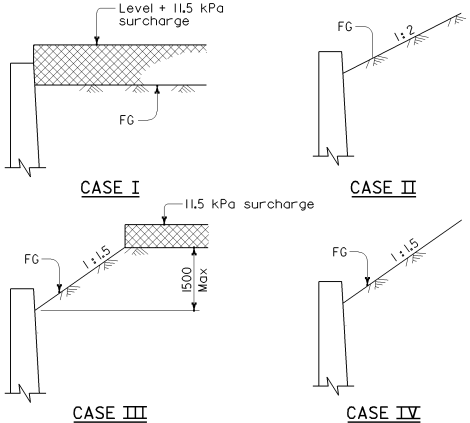

DETAIL OF DESIGN LOADING CASES

Case I Level +11.5 kPa surcharge
Case II 1:2 Unlimited slope
Case III 1:1.5 Limited slope (1500 max height) +11.5 kPa surcharge
Case IV 1:1.5 Unlimited slope

NOTES

Design Conditions:

Design H may be exceeded by 150 mm before going to the next size. Special footing design is required where foundation material is incapable of supporting toe pressure loads listed in table.

Design Data:

f_c = 10 MPa f'_c = 25 MPa f_s = 168 MPa n = 10 earth = 19 kN/m^3
Case I- Wall design for equivalent fluid pressure = 4.2 and 5.6 kPa/m.
Case II, III, IV - Wall design is based on Rankine's formula with ø = 33° 42'.

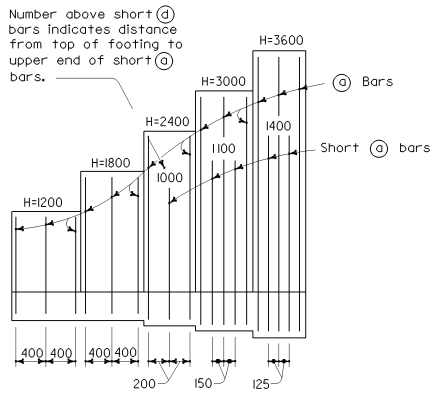

ELEVATION

TABLE OF REINFORCING STEEL, DIMENSIONS AND DATA

Design H		◉ 1200	1800	2400	3000	3600
W		1250	1550	2000	2450	2900
F Spread Ftg		400	400	450	450	550
Batter		None	None	None	100:3	100:6
	ⓐ Bars	#16@400	#16@400	#16@400	#16@300	#16@250
Short	ⓐ Bars	None	None	#16@400	#16@300	#16@250
	ⓑ Bars	#16@400	#16@400	#16@200	#16@150	#16@125
Total	ⓔ Bars	8-#19	8-#19	10-#19	8-#19	6-#19
Toe Pressure	Case I kPa	80	105	120	145	170
	Case II kPa	75	100	130	165	195
	Case III kPa	80	110	140	185	210
	Case IV kPa	95	155	200	255	310

Caltrans Metric

DIST	COUNTY	ROUTE	KILOMETER POST TOTAL PROJECT	SHEET NO.	TOTAL SHEETS

REGISTERED CIVIL ENGINEER
July 1, 2004
PLANS APPROVAL DATE

REGISTERED PROFESSIONAL ENGINEER Overcomer Y. Hor No. 45803 Exp. 12-31-06 CIVIL STATE OF CALIFORNIA

The State of California or its officers or agents shall not be responsible for the accuracy or completeness of electronic copies of this plan sheet.

To get to the Caltrans web site, go to: http://www.dot.ca.gov

STATE OF CALIFORNIA
DEPARTMENT OF TRANSPORTATION

RETAINING WALL TYPE 5

NO SCALE

ALL DIMENSIONS ARE IN MILLIMETERS UNLESS OTHERWISE SHOWN

B3-7

2004 Std PLAN B3-7

06-07-04

Back to Table of Contents

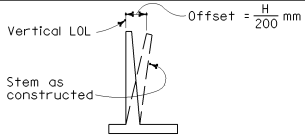

APPROXIMATE WALL OFFSET VALUES

Not required for wall Types 3 and 4. Values for offseting forms to be determined by the Engineer.

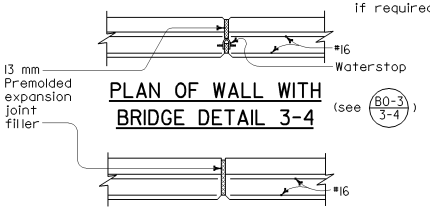

PLAN OF WALL WITH BRIDGE DETAIL 3-4

PLAN OF WALL WITH EXPANSION JOINT ONLY

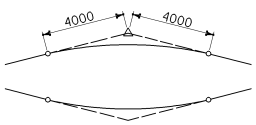

8000 mm VC AT TOP OF WALL SLOPE CHANGE

Where shown on the plans

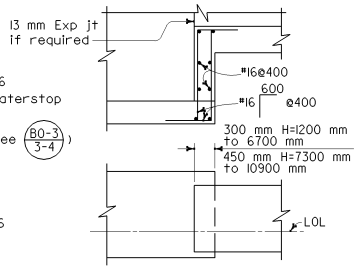

FOOTING STEP

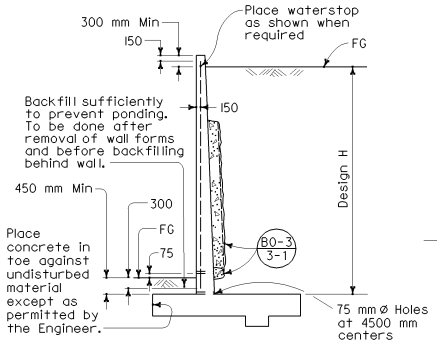

DESIGN AND DRAINAGE

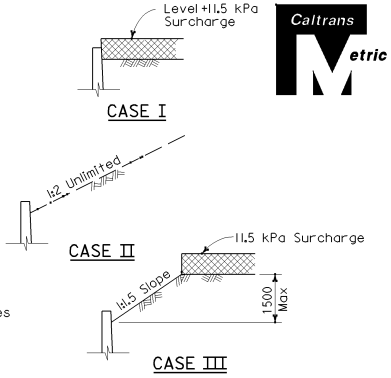

DETAIL OF DESIGN LOADING CASES

Case I Level +11.5 kPa surcharge

Case II 1:2 Unlimited slope

Case III 1:1.5 Limited slope (1500 max height) +11.5 kPa surcharge

NOTE: Surcharge Limits Shown Apply To Retaining Walls Type 1 and 3.

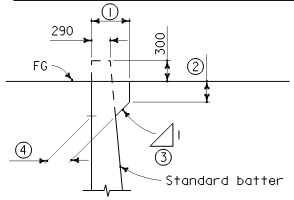

Dimensions 1, 2 and 3 to be as shown elsewhere in the Project Plans.

4 Stem width at base of haunch to be determined as shown.

STEM WIDTH AT BASE OF HAUNCH

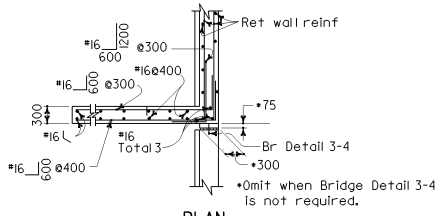

PLAN

(For return wall Type "A")

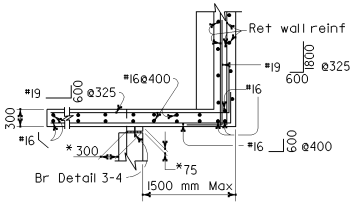

PLAN

(For return wall Type "B")

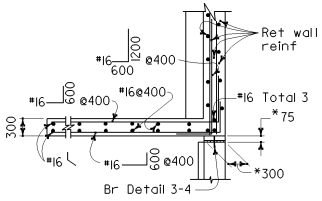

*Omit when Bridge Detail 3-4 is not required.

PLAN

(For return wall Type "C")

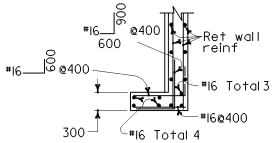

PLAN

(For return wall Type "D")

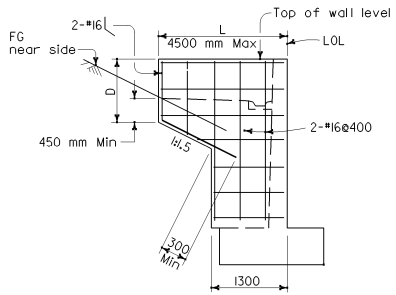

ELEVATION

RETURN WALL TYPE "A"

Use where H=2400 mm or less

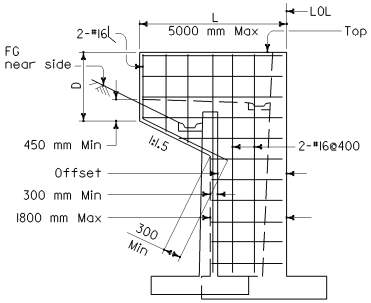

ELEVATION

RETURN WALL TYPE "B"

Use where H=3000 mm or more on offset walls

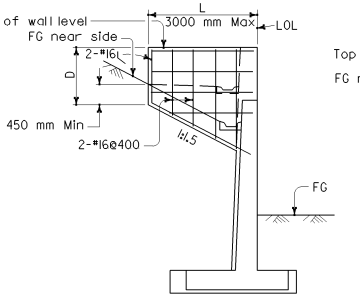

ELEVATION

RETURN WALL TYPE "C"

Use where H=3000 mm or more on straight walls

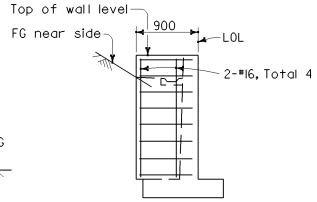

ELEVATION

RETURN WALL TYPE "D"

Use where H=1800 or less

NOTES

Design Conditions:

Design H may be exceeded by 150 millimeters before going to the next size. Special footing design is required where foundation material is incapable of supporting toe pressure listed in table.

Return wall not required unless shown elsewhere.

Design Data:

f_c = 10 MPa f'_c = 25 MPa f_s = 168 MPa

n = 10 earth = 19 kN/m³

11.5 kPa surcharge:

Equivalent fluid pressure =

5.6 kPa/m maximum for determination of toe pressure.

4.2 kPa/m minimum for determination of heel pressure.

Earth pressures for 1:2 unlimited slope, 1:1.5 slope, and 1:1.5 unlimited slope, determined from Rankine's formula with Ø=33°-42'.

STATE OF CALIFORNIA
DEPARTMENT OF TRANSPORTATION

RETAINING WALL DETAILS No. 1

NO SCALE

ALL DIMENSIONS ARE IN MILLIMETERS UNLESS OTHERWISE SHOWN

B3-8

Caltrans Metric

DIST	COUNTY	ROUTE	KILOMETER POST TOTAL PROJECT	SHEET NO.	TOTAL SHEETS

REGISTERED CIVIL ENGINEER

July 1, 2004
PLANS APPROVAL DATE

REGISTERED PROFESSIONAL ENGINEER Overcomer Y. Hor No. 45803 Exp. 12-31-06 CIVIL STATE OF CALIFORNIA

The State of California or its officers or agents shall not be responsible for the accuracy or completeness of electronic copies of this plan sheet.

To get to the Caltrans web site, go to: http://www.dot.ca.gov

06-08-04

Back to Table of Contents

DIST	COUNTY	ROUTE	KILOMETER POST TOTAL PROJECT	SHEET NO.	TOTAL SHEETS

Caltrans Metric

REGISTERED CIVIL ENGINEER

July 1, 2004
PLANS APPROVAL DATE

REGISTERED PROFESSIONAL ENGINEER Overcomer Y. Hor No. 45803 Exp. 12-31-06 CIVIL STATE OF CALIFORNIA

The State of California or its officers or agents shall not be responsible for the accuracy or completeness of electronic copies of this plan sheet.

To get to the Caltrans web site, go to: http://www.dot.ca.gov

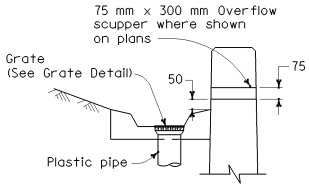

WALL DRAIN DETAIL

Scale: 1:10

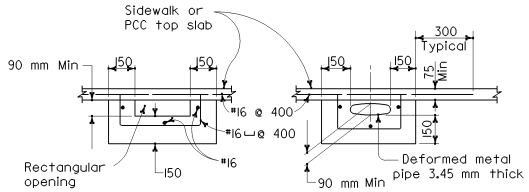

NOTE

Area of opening to be not less than that of pipe from wall gutter. Make opening transition in wall. Edge opening in curb face to 19 mm minimum radius.

OUTLET DETAIL - SECTION B-B

Scale: 1:10

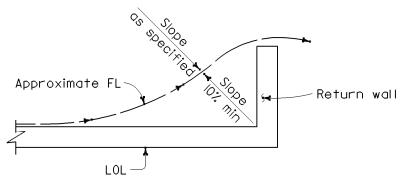

WALL DRAINAGE WHERE GUTTER NOT REQUIRED

Scale: 1:50

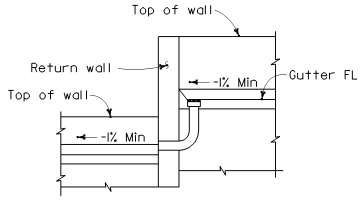

SECTION A-A

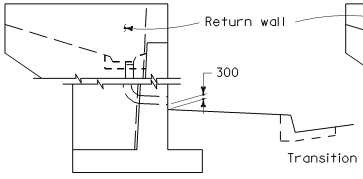

RETAINING WALL, FACE OF WALL OUTLET

Scale: 1:50

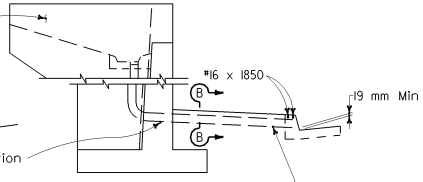

100 mm Plastic pipe when wall drain is 100 mm or less. For larger pipe see "Outlet Detail".

RETAINING WALL, GUTTER OUTLET

Scale: 1:50

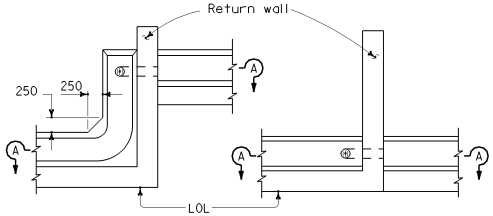

PLAN-OFFSET WALL PLAN-CONTINUOUS WALL

DRAIN THROUGH RETURN WALL

Scale: 1:50

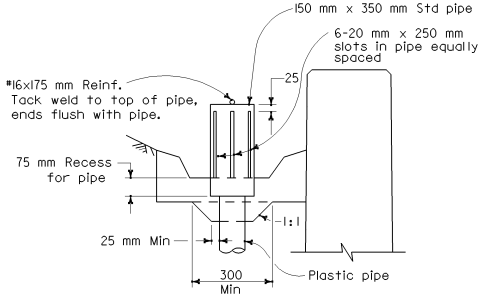

WALL DRAIN WITH PIPE DOME

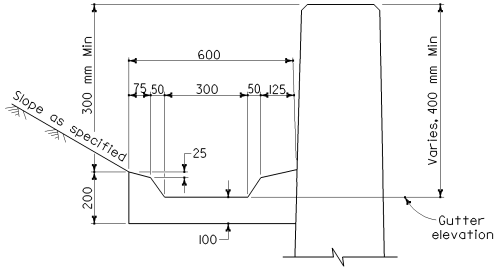

TYPICAL GUTTER DETAIL

Scale: 1:10

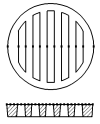

GRATE DETAIL

Sizes to fit standard hubs

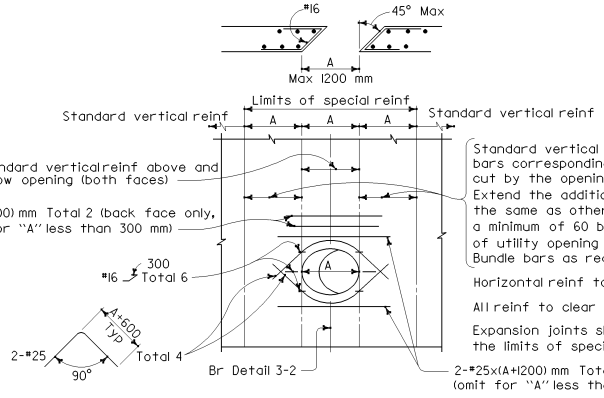

Standard vertical reinforcement plus additional vertical bars corresponding in size and number to bars cut by the opening. Place half on each side. Extend the additional bars into the footing the same as other vertical wall reinforcement and to a minimum of 60 bar diameters above the top of utility opening if wall height permits. Bundle bars as required.

Horizontal reinf to be standard except as shown.

All reinf to clear opening by 50 mm minimum.

Expansion joints shall not be located within the limits of special reinforcing.

RETAINING WALL UTILITY OPENING

Max size of opening (A) = 1200 mm
To be used in conjunction with sheet B3-8

STATE OF CALIFORNIA
DEPARTMENT OF TRANSPORTATION

RETAINING WALL DETAILS No. 2

NO SCALE

ALL DIMENSIONS ARE IN MILLIMETERS UNLESS OTHERWISE SHOWN

B3-9

2004 Std PLAN B3-9

05-24-04

Back to Table of Contents

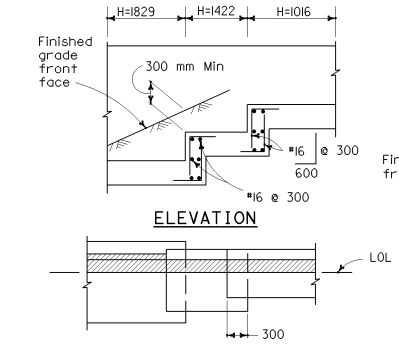

FOOTING STEP DETAILS

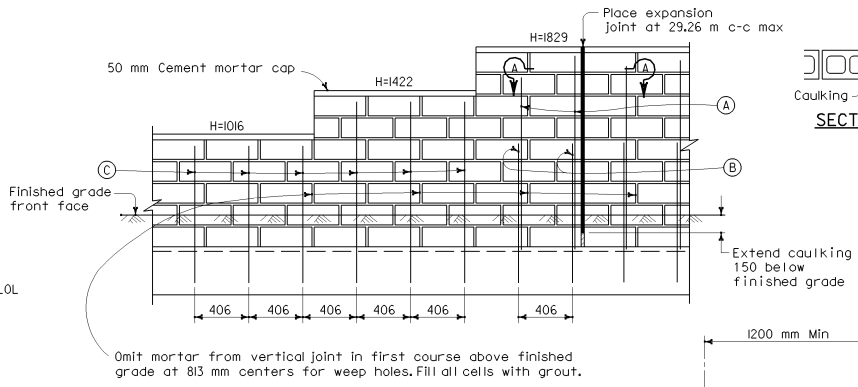

ELEVATION - MASONRY CONSTRUCTION

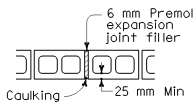

SECTION A-A

Caltrans Metric

DIST	COUNTY	ROUTE	KILOMETER POST TOTAL PROJECT	SHEET NO.	TOTAL SHEETS

REGISTERED CIVIL ENGINEER

July 1, 2004
PLANS APPROVAL DATE

REGISTERED PROFESSIONAL ENGINEER Overcomer Y. Hor No. 45803 Exp. 12-31-06 CIVIL STATE OF CALIFORNIA

The State of California or its officers or agents shall not be responsible for the accuracy or completeness of electronic copies of this plan sheet.

To get to the Caltrans web site, go to: http://www.dot.ca.gov

DESIGN DATA

Masonry: f_m = 3.5 MPa f'_m = 10.5 MPa f_s = 168 MPa n = 20

Reinforced Concrete: f_c = 10 MPa f'_c = 25 MPa f_s = 168 MPa n = 10

Earth = 19 kN/m^3

Minimum allowable soil bearing capacity of foundation material = 95 kPa

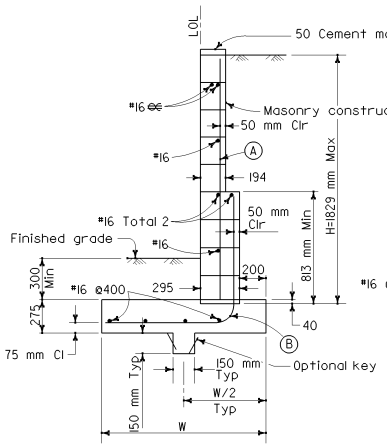

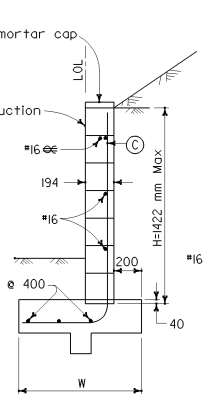

TYPE 6A WALL

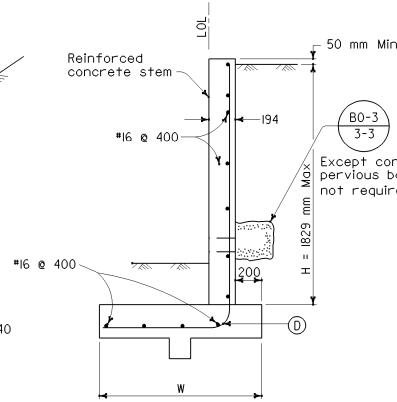

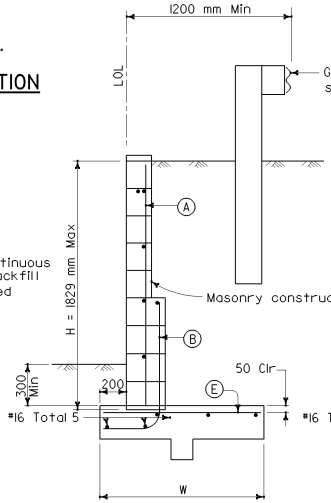

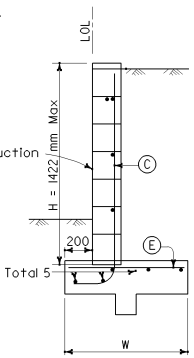

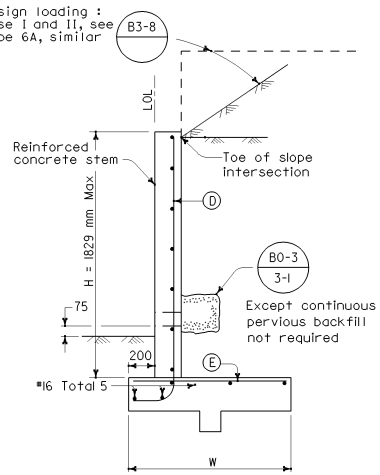

TYPE 6B WALL

Type	Design H	1016	1219	1422	1626	1829
6A	W	1000	1100	1200	1300	1400
6A	A				#16@406	#16@406
6A	B				#16@406	#16@406
6A	C	#16@406	#16@406	#16@406		
6A	D	#16@375	#16@375	#16@375	#16@375	#16@300

NOTES

1. For details not shown at "6B", see "6A".
2. Type 6 retaining wall shall be limited to use for walls of Design H of 1829 mm or less.
3. Where traffic is adjacent to the top of wall, guard rails should be set back from the top front face of wall at least 1200 mm.
4. Unless otherwise stipulated, the contractor will have the option of constructing the Type 6 walls of either masonry or reinforced concrete.
5. For reinforced concrete wall stem joint details, See B0-3/3-3 and B0-3/3-4.
6. No splices are allowed on A, B and C bars.
7. At D bar, no splices are allowed within 500 mm above the top of footing.

Type	Design H	1016	1219	1422	1626	1829
6B	W	850	950	1050	1150	1250
6B	A				#16@406	#16@406
6B	B				#16@406	#16@406
6B	C	#16@406	#16@406	#16@406		
6B	D	#16@375	#16@375	#16@375	#16@375	#16@300
6B	E	#16@375	#16@375	#16@375	#16@375	#16@300

STATE OF CALIFORNIA
DEPARTMENT OF TRANSPORTATION

RETAINING WALL TYPE 6 1829 mm MAXIMUM

NO SCALE

ALL DIMENSIONS ARE IN MILLIMETERS UNLESS OTHERWISE SHOWN

B3-11

03-26-04

Back to Table of Contents

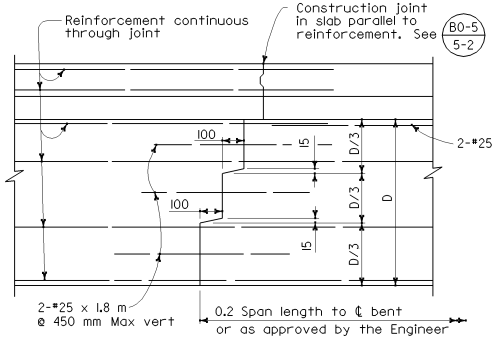

TRANSVERSE GIRDER CONSTRUCTION JOINTS

DETAIL J-3

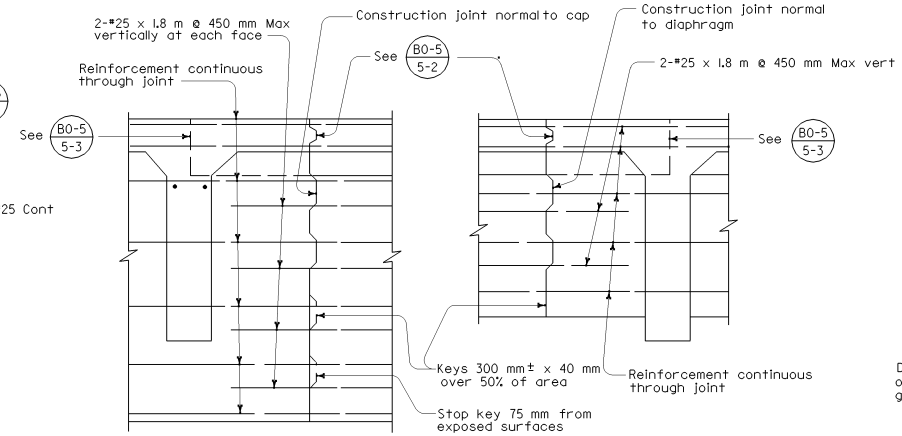

BENT CAP

DIAPHRAGMS

LONGITUDINAL CONSTRUCTION JOINTS

DETAIL J-4

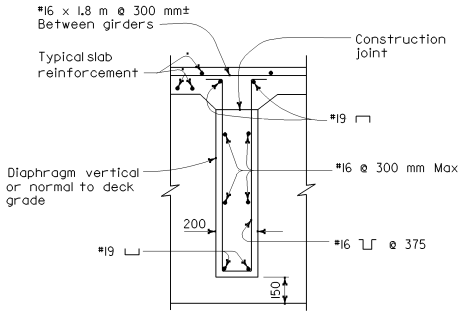

INTERMEDIATE DIAPHRAGM SECTION

DETAIL D-1

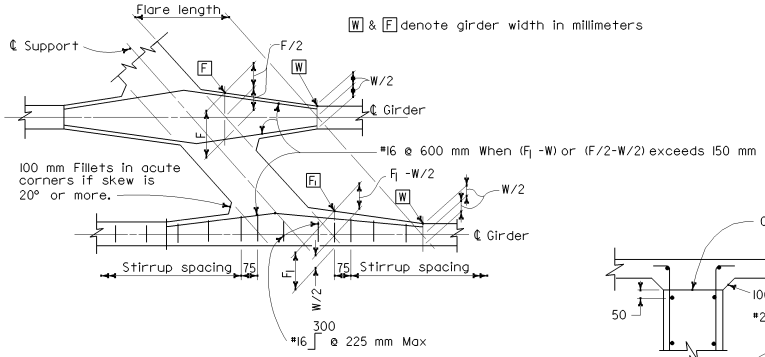

TYPICAL GIRDER FLARE AND STIRRUP SPACING DIAGRAM

DETAIL S-3

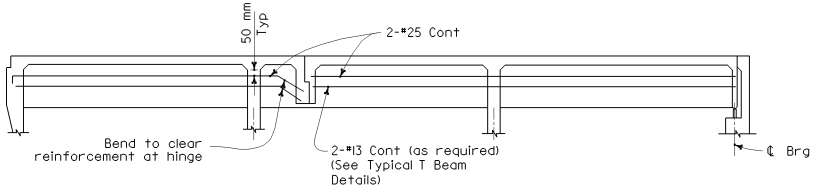

GIRDER WEB REINFORCEMENT

DETAIL J-1

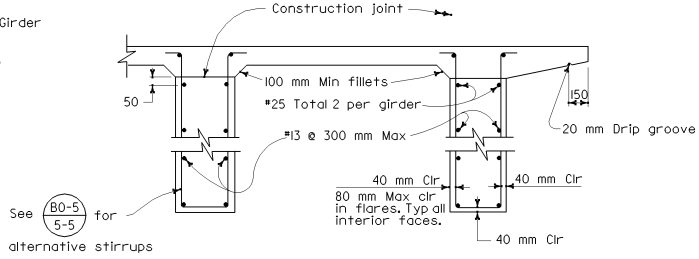

TYPICAL T BEAM DETAILS

DETAIL T-1

DIST	COUNTY	ROUTE	KILOMETER POST TOTAL PROJECT	SHEET NO.	TOTAL SHEETS

REGISTERED CIVIL ENGINEER

July 1, 2004
PLANS APPROVAL DATE

REGISTERED PROFESSIONAL ENGINEER Madhwesh Raghavendrachar No. C51119 Exp. 9-30-05 CIVIL STATE OF CALIFORNIA

The State of California or its officers or agents shall not be responsible for the accuracy or completeness of electronic copies of this plan sheet.

To get to the Caltrans web site, go to: http://www.dot.ca.gov

STATE OF CALIFORNIA
DEPARTMENT OF TRANSPORTATION

T-BEAM DETAILS

NO SCALE

ALL DIMENSIONS ARE IN MILLIMETERS UNLESS OTHERWISE SHOWN

B6-1

06-08-04

2004 Std PLAN B6-1

Back to Table of Contents

DIST	COUNTY	ROUTE	KILOMETER POST TOTAL PROJECT	SHEET NO.	TOTAL SHEETS

REGISTERED CIVIL ENGINEER

July 1, 2004
PLANS APPROVAL DATE

REGISTERED PROFESSIONAL ENGINEER Madhwesh Raghavendrachar No. C51119 Exp. 9-30-05 CIVIL STATE OF CALIFORNIA

The State of California or its officers or agents shall not be responsible for the accuracy or completeness of electronic copies of this plan sheet.

To get to the Caltrans web site, go to: http://www.dot.ca.gov

Caltrans Metric

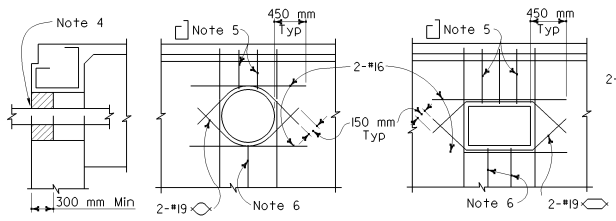

DETAIL U-11

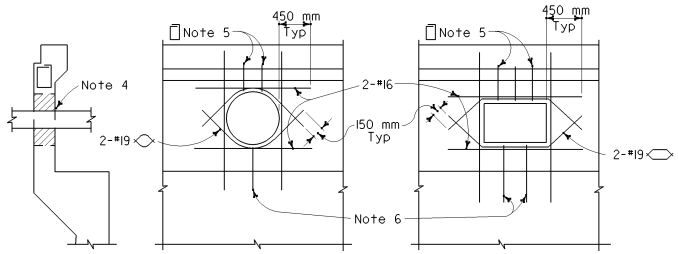

DETAIL U-12

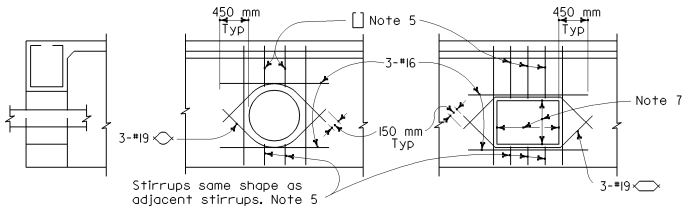

DETAIL U-13

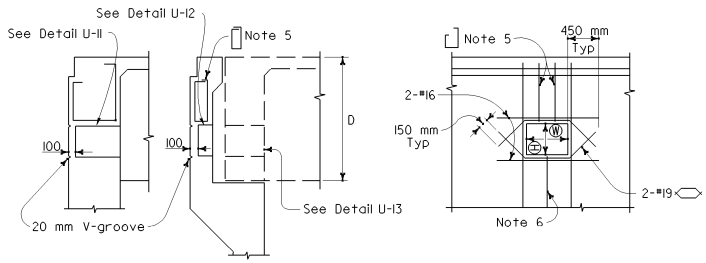

DETAIL U-14
(For future utility opening)
ABUTMENT DIAPHRAGMS

For future utility opening dimensions not shown on Project Plans use:
(H) = 1/3 D or 375 mm minimum, whichever is greater.
(W) = 1/3 D or 375 mm minimum, whichever is greater.

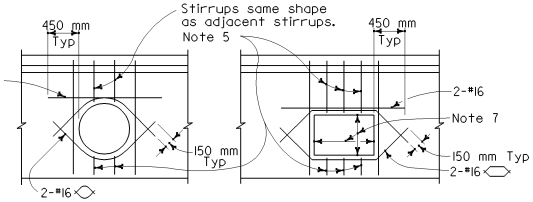

DETAIL U-15
INTERMEDIATE DIAPHRAGMS

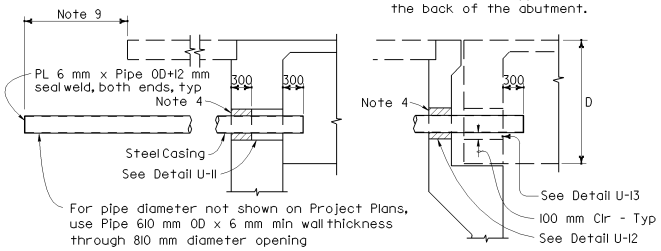

DETAIL U-16
(For future utility provisions under approach slab)
ABUTMENT DIAPHRAGMS

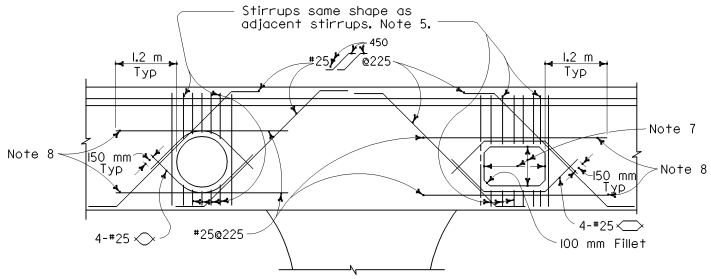

DETAIL U-17
BENT CAPS
Near or between columns

NOTES

1. The exact location, elevation, size, and direction of openings shall be in accordance with the Project Plans and as directed by the Engineer.
2. Girders not shown. See Project Plans.
3. All reinforcement detailed to be placed in addition to reinforcement shown on Project Plans.
4. Seal utilities at abutments with concrete or mortar, after tightly wrapping utility with 2 layers of 7 kg building paper.
5. Reinforcement to be same bar size, and 2/3 the spacing of adjacent reinforcement shown on Project Plans.
6. Reinforcement to be same bar size and shape as adjacent reinforcement shown on Project Plans.
7. For future utility opening dimensions, see Project Plans and Detail U-14.
8. When there is insufficient space to place reinforcement as shown, hook reinforcement into exterior girder.
9. Unless otherwise shown on Project Plans, casing shall extend to the greater of 1.5 m beyond the end of the approach slab, 1.5 m beyond the end of the adjacent wingwall, or 6 m beyond the back of the abutment.

STATE OF CALIFORNIA
DEPARTMENT OF TRANSPORTATION

UTILITY OPENINGS T-BEAM

NO SCALE

ALL DIMENSIONS ARE IN MILLIMETERS UNLESS OTHERWISE SHOWN

B6-10

06-07-04

Back to Table of Contents

Caltrans Metric

DIST	COUNTY	ROUTE	KILOMETER POST TOTAL PROJECT	SHEET NO.	TOTAL SHEETS

REGISTERED CIVIL ENGINEER

July 1, 2004
PLANS APPROVAL DATE

REGISTERED PROFESSIONAL ENGINEER Efthymios Deliis No. C51434 Exp. 6-30-06 CIVIL STATE OF CALIFORNIA

The State of California or its officers or agents shall not be responsible for the accuracy or completeness of electronic copies of this plan sheet.

To get to the Caltrans web site, go to: http://www.dot.ca.gov

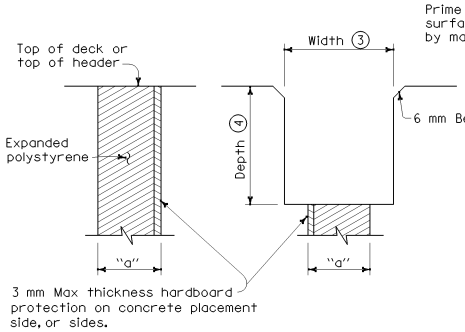

FORMING DETAIL SAWCUT DETAIL

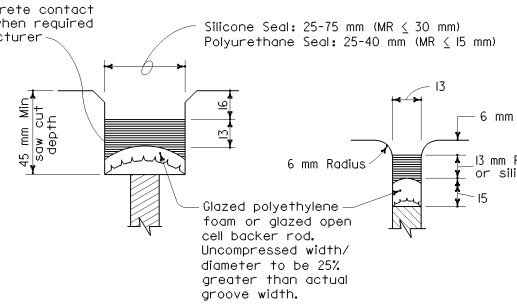

TYPE A SEAL
Movement rating : Polyurethane = 15 mm Max
Silicone = 30 mm Max

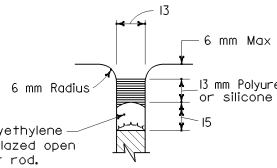

TYPE AL SEAL
Longitudinal joints only

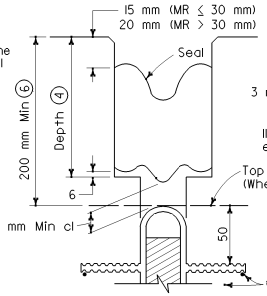

TYPE B JOINT SEAL
IN MINIMUM WIDTH POSITION (W_2)

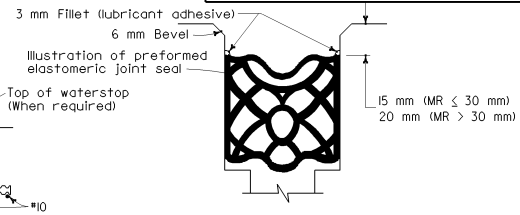

TYPE B SEAL
Movement rating > 30 mm and ≤ 50 mm

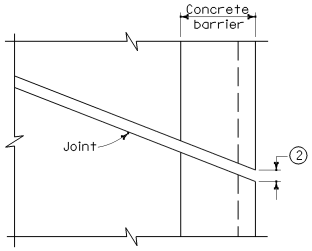

PLAN OF JOINT

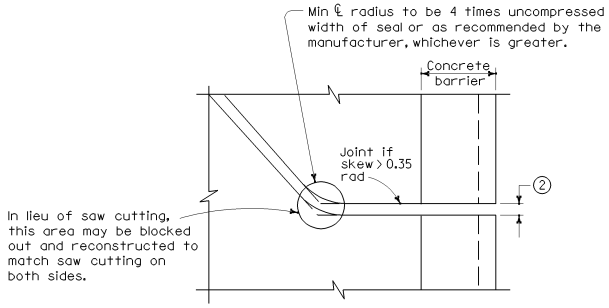

PLAN OF ANGLED JOINT

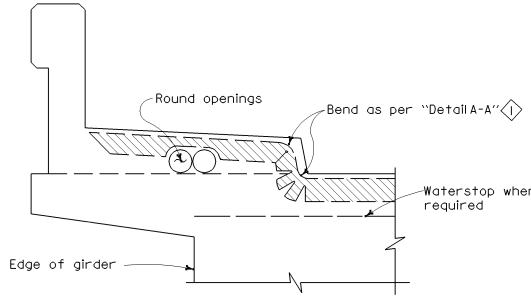

Type "B" seal shown. Type "A" seals to comform to the general path of seal shown.

CONCRETE BARRIER AND SIDEWALK

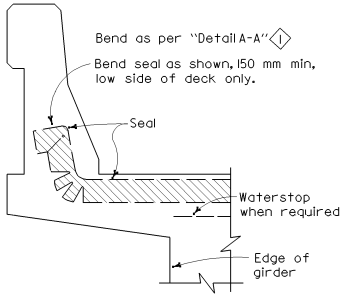

CONCRETE BARRIER

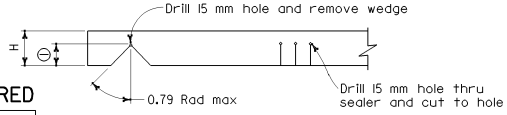

DIMENSIONS "a" OF JOINT REQUIRED

Movement Rating (MR) (5)	Bridge Type	"a" Dimension Deck Concrete Placed: Winter	Fall-Spring	Summer
50 mm	All except CIP/PS	40 mm	30 mm	20 mm
	CIP/PS	30 mm	25 mm	15 mm
40 mm	All except CIP/PS	30 mm	25 mm	15 mm
	CIP/PS	25 mm	20 mm	15 mm
30 mm	All except CIP/PS	25 mm	20 mm	15 mm
	CIP/PS	20 mm	15 mm	15 mm
15 mm	All except CIP/PS	20 mm	20 mm	15 mm
	CIP/PS	15 mm	15 mm	15 mm

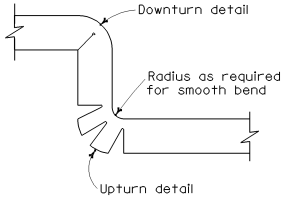

DETAIL A-A

JOINT SEALS DETAILS

NOTES

(1) Make smooth cuts from the bottom of seal to 40 mm clear of top leaving at least one complete cell between the top of the cut and top of the seal. When necessary cut back of seal to clear conduit and round openings.

(2) Opening in barrier to match width of sawn deck joint.

(3) Sawcut groove widths shall be as ordered by the Engineer.

(4) Depth of sawcut: Type A - Depth to be shown above.
Type B - Depth to be equal to or greater than the depth of seal measured along the contact surface, when compressed to minimum width position (W_2) plus dimensions shown above.

(5) MR (movement rating) as shown on other detail plans.

(6) Other depths must be approved by the Engineer.

STATE OF CALIFORNIA
DEPARTMENT OF TRANSPORTATION

JOINT SEALS (MAXIMUM MOVEMENT RATING = 50 mm)

NO SCALE

ALL DIMENSIONS ARE IN MILLIMETERS UNLESS OTHERWISE SHOWN

B6-21

05-18-04

Back to Table of Contents

Caltrans Metric

DIST	COUNTY	ROUTE	KILOMETER POST TOTAL PROJECT	SHEET NO.	TOTAL SHEETS

REGISTERED CIVIL ENGINEER

July 1, 2004
PLANS APPROVAL DATE

REGISTERED PROFESSIONAL ENGINEER Madhwesh Raghavendrachar No. C51119 Exp. 9-30-05 CIVIL STATE OF CALIFORNIA

The State of California or its officers or agents shall not be responsible for the accuracy or completeness of electronic copies of this plan sheet.

To get to the Caltrans web site, go to: http://www.dot.ca.gov

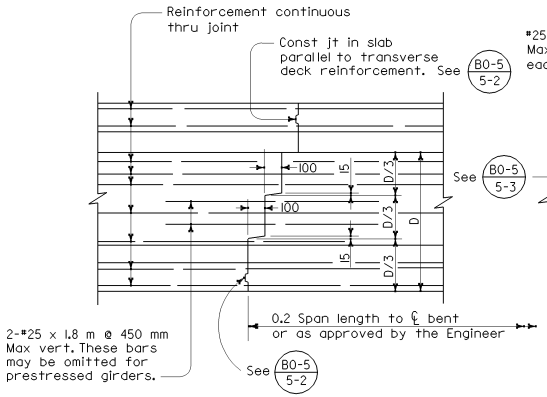

TRANSVERSE GIRDER CONSTRUCTION JOINTS

DETAIL J-3

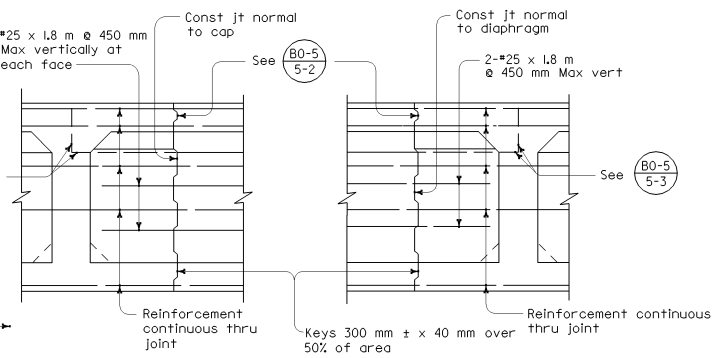

BENT CAP

DIAPHRAGMS

LONGITUDINAL CONSTRUCTION JOINTS

DETAIL J-4

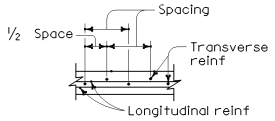

DETAIL S-2

BOTTOM SLAB TRANSVERSE REINFORCEMENT SPACING DIAGRAM

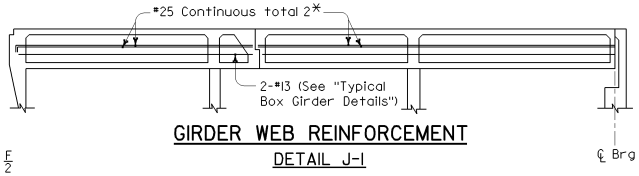

GIRDER WEB REINFORCEMENT

DETAIL J-1

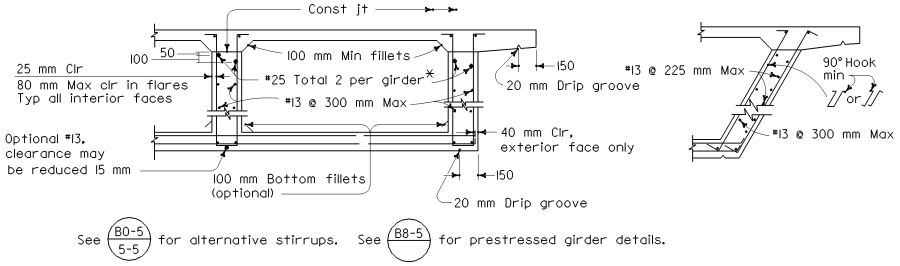

TYPICAL BOX GIRDER DETAILS

DETAIL B-1

* At all web constuction joints

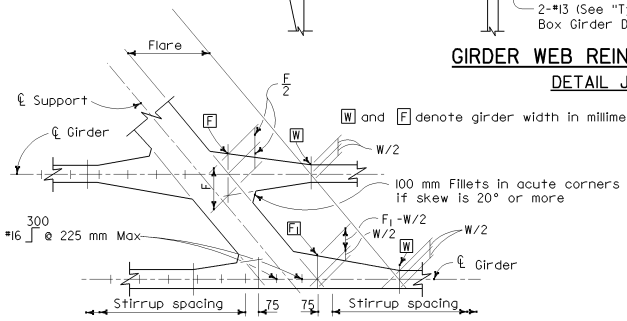

TYPICAL GIRDER FLARE AND STIRRUP SPACING DIAGRAM

DETAIL S-3

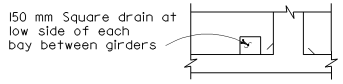

VIEW B-B

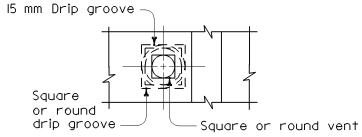

NOTE

125 mm ϕ or ϕ vent in lower slab. Minimum of two vents per span in each bay between girders. One vent to be located at low point of span and other vent to be located at opposite end of span @ 450 mm from face of abutment or bent.

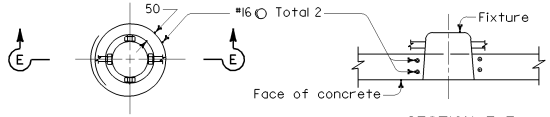

ADDED REINFORCEMENT

SECTION E-E

RECESSED SOFFIT LIGHT

DETAIL F-1

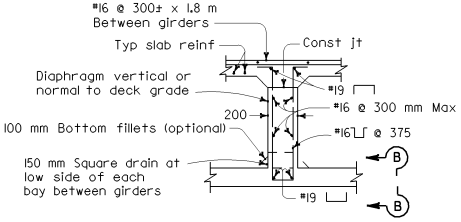

INTERMEDIATE DIAPHRAGM SECTION

DETAIL D-1

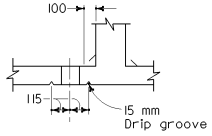

VENT

DETAIL V-1

STATE OF CALIFORNIA
DEPARTMENT OF TRANSPORTATION

BOX GIRDER DETAILS

NO SCALE

ALL DIMENSIONS ARE IN MILLIMETERS UNLESS OTHERWISE SHOWN

B7-1

06-07-04

Back to Table of Contents

DIST	COUNTY	ROUTE	KILOMETER POST TOTAL PROJECT	SHEET NO.	TOTAL SHEETS

REGISTERED CIVIL ENGINEER

July 1, 2004
PLANS APPROVAL DATE

REGISTERED PROFESSIONAL ENGINEER C.J. Sims No. 46471 Exp. 6-30-07 CIVIL STATE OF CALIFORNIA

The State of California or its officers or agents shall not be responsible for the accuracy or completeness of electronic copies of this plan sheet.

To get to the Caltrans web site, go to: http://www.dot.ca.gov

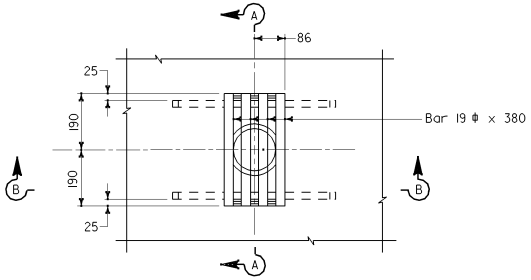

PLAN

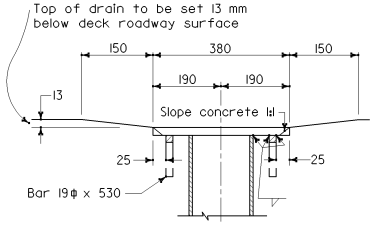

SECTION A-A

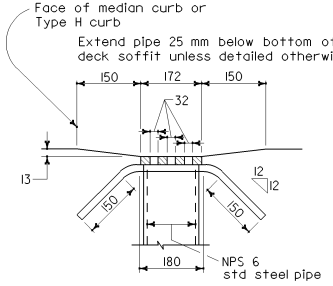

SECTION B-B

NOTE

Galvanize drain after fabrication.

DRAIN - TYPE "A" DETAIL 7-1

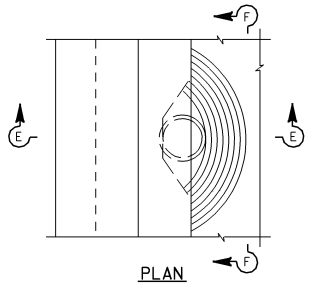

PLAN

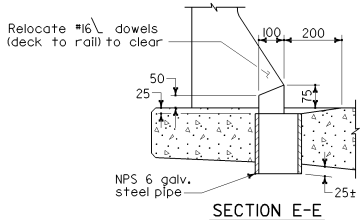

SECTION E-E

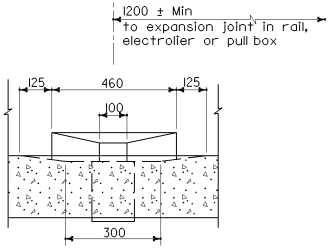

SECTION F-F

DRAIN - TYPE "B" DETAIL 7-3

For Type 25 barrier railing

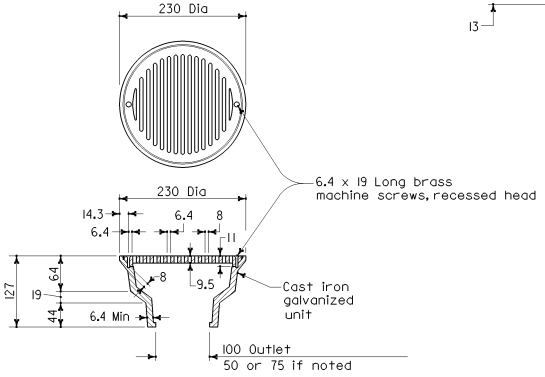

AREA DRAIN DETAIL 7-4

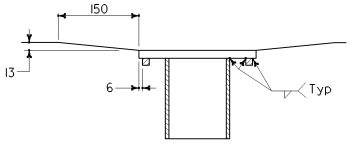

SECTION G-G

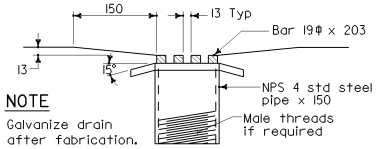

NOTE

Galvanize drain after fabrication.

SECTION H-H

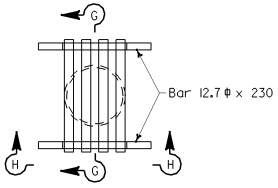

PLAN

PEDESTRIAN STRUCTURE DRAIN DETAIL 7-5

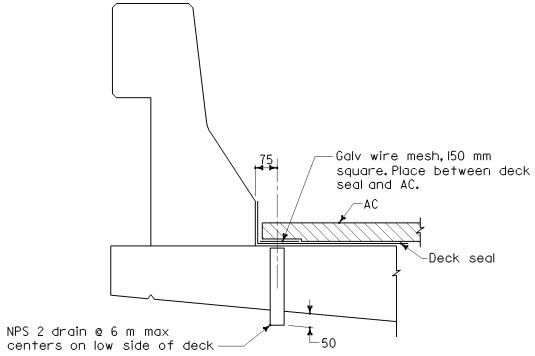

DECK BLEEDER DRAIN DETAIL 7-6

STATE OF CALIFORNIA
DEPARTMENT OF TRANSPORTATION

DECK DRAINS

NO SCALE

ALL DIMENSIONS ARE IN MILLIMETERS UNLESS OTHERWISE SHOWN

B7-5

03-26-04

Back to Table of Contents

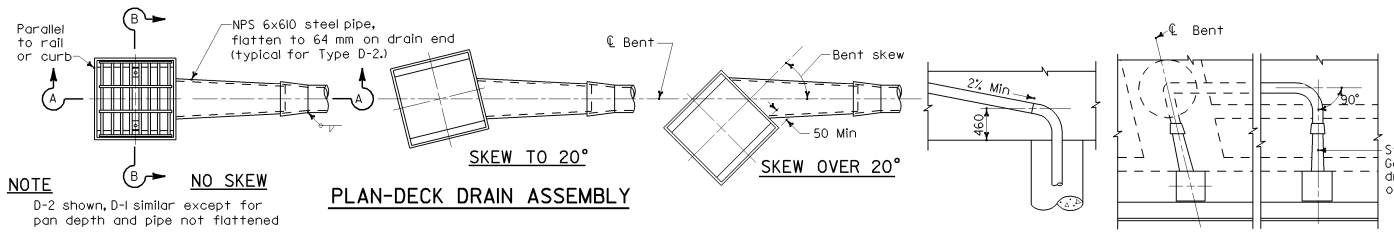

NOTE

D-2 shown, D-1 similar except for pan depth and pipe not flattened

PLAN-DECK DRAIN ASSEMBLY

DRAIN PIPE ALIGNMENT

Caltrans Metric

DIST	COUNTY	ROUTE	KILOMETER POST TOTAL PROJECT	SHEET NO.	TOTAL SHEETS

REGISTERED CIVIL ENGINEER

July 1, 2004

PLANS APPROVAL DATE

REGISTERED PROFESSIONAL ENGINEER C.J. Sims No. 46471 Exp. 6-30-07 CIVIL STATE OF CALIFORNIA

The State of California or its officers or agents shall not be responsible for the accuracy or completeness of electronic copies of this plan sheet.

To get to the Caltrans web site, go to: http://www.dot.ca.gov

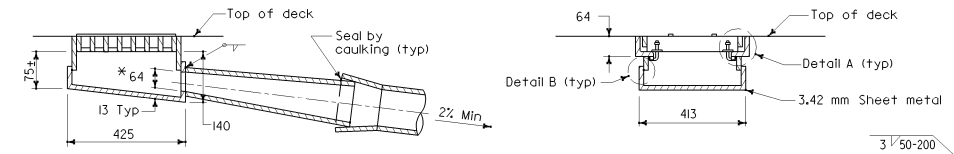

SECTION A-A

SECTION B-B

TYPE D-2 DETAIL 7-8

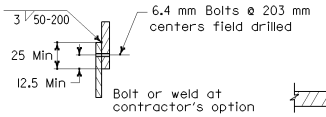

DETAIL B

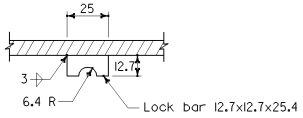

LOCK BAR

Apply adhesive sealant on pipe periphery to seal joint. Secure each end of sleeve to pipe with 3-M5-0.8Px12 mm self tapping hex head screws.

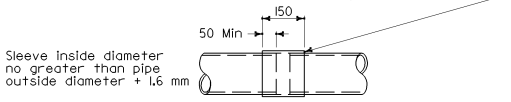

SLEEVE CONNECTION

* 64 mm Flattened pipe opening to be maintained. Cut skirt of frame if it encroaches on the opening.

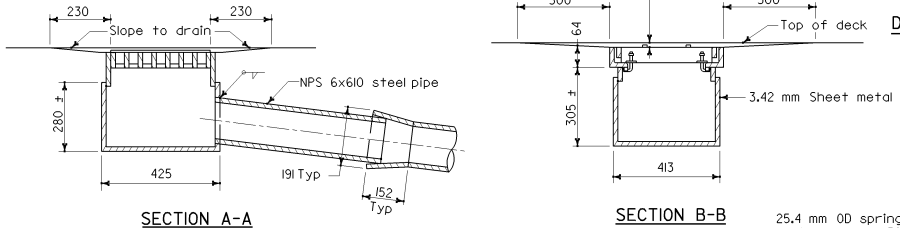

SECTION A-A

SECTION B-B

TYPE D-1 DETAIL 7-7

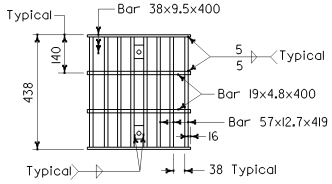

GRATE

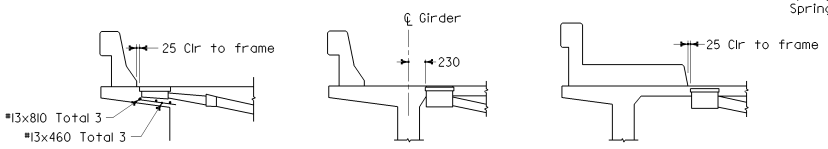

D-2 IN OVERHANG

D-1 IN BAY

ELEVATION-DECK DRAIN LOCATIONS

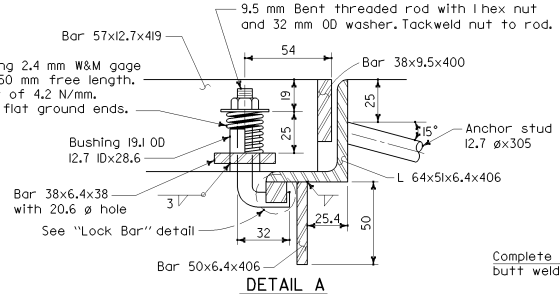

DETAIL A

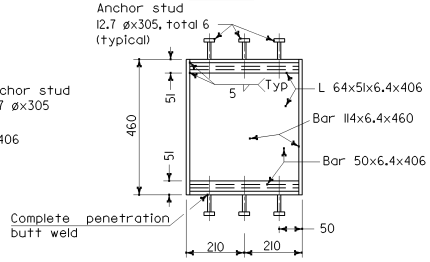

FRAME

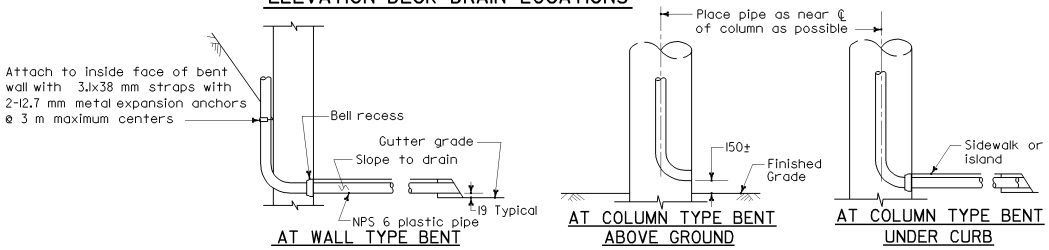

AT WALL TYPE BENT

AT COLUMN TYPE BENT ABOVE GROUND

AT COLUMN TYPE BENT UNDER CURB

DRAIN OUTLET

NOTES

All pipe to be NPS 6x3.42 welded steel pipe except as noted and galvanized if not encased in concrete. Fittings and bends shall have a minimum wall thickness of 3.1 mm. All joints or connections to be butt welded or connected by a steel pipe sleeve and to be smooth throughout inside of pipe except as noted. All bends to be on 460 mm minimum radius measured along ℄ pipe. All bends to be smooth. Pipes not encased in concrete to be supported by suitable galvanized hangers ø3 m maximum spacing throughout. Galvanize deck drain assembly after fabrication.

STATE OF CALIFORNIA
DEPARTMENT OF TRANSPORTATION

DECK DRAINS TYPES D-1 AND D-2

NO SCALE

ALL DIMENSIONS ARE IN MILLIMETERS UNLESS OTHERWISE SHOWN

B7-6

06-07-04

Back to Table of Contents

DIST	COUNTY	ROUTE	KILOMETER POST TOTAL PROJECT	SHEET NO.	TOTAL SHEETS

REGISTERED CIVIL ENGINEER

July 1, 2004
PLANS APPROVAL DATE

REGISTERED PROFESSIONAL ENGINEER C.J. Sims NO. 46471 Exp. 6-30-07 CIVIL STATE OF CALIFORNIA

The State of California or its officers or agents shall not be responsible for the accuracy or completeness of electronic copies of this plan sheet.

To get to the Caltrans web site, go to: http://www.dot.ca.gov

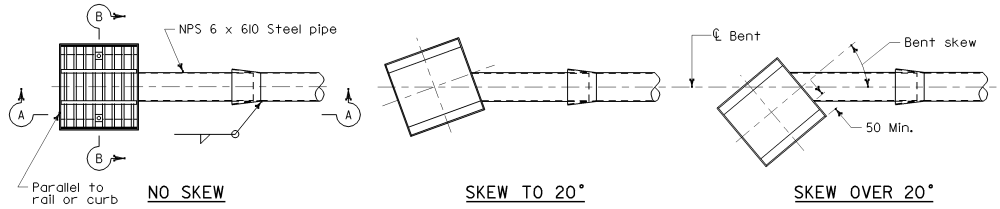

PLAN-DECK DRAIN ASSEMBLY

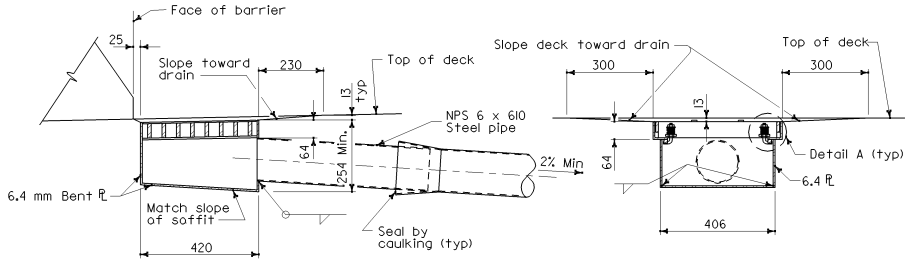

SECTION A-A SECTION B-B

DECK DRAIN ASSEMBLY DETAIL

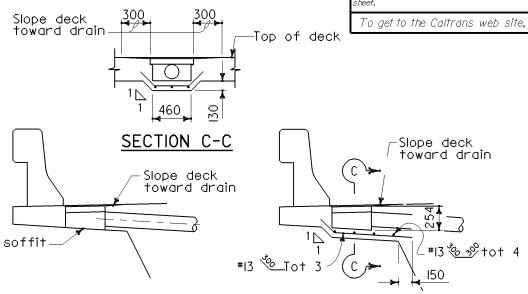

SECTION C-C

DETAIL 7-9 DRAIN FLUSH WITH OVERHANG

DETAIL 7-10 DRAIN WITH HAUNCHED OVERHANG

ELEVATION-DECK DRAIN LOCATIONS

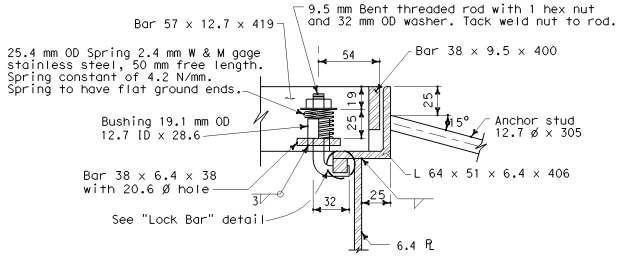

DETAIL A

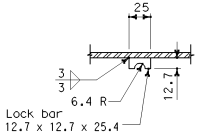

LOCK BAR

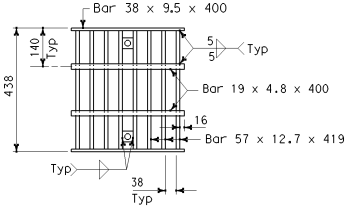

GRATE

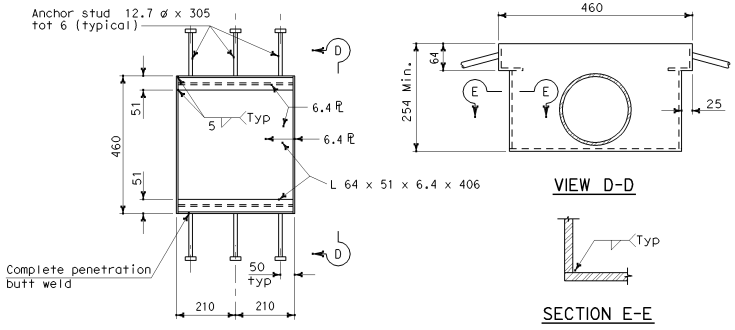

FRAME

VIEW D-D

SECTION E-E

NOTES:

1. For drain pipe alignment, sleeve connection, drain outlet details and notes, see Standard Plan B7-6.
2. Galvanize deck drain assembly after fabrication.

STATE OF CALIFORNIA
DEPARTMENT OF TRANSPORTATION

DECK DRAIN TYPE D-3

NO SCALE

ALL DIMENSIONS ARE IN MILLIMETERS UNLESS OTHERWISE SHOWN

B7-7

06-07-04

Back to Table of Contents

DIST	COUNTY	ROUTE	KILOMETER POST TOTAL PROJECT	SHEET NO.	TOTAL SHEETS

REGISTERED CIVIL ENGINEER

July 1, 2004
PLANS APPROVAL DATE

REGISTERED PROFESSIONAL ENGINEER C.J. Sims No. 46471 Exp. 6-30-07 CIVIL STATE OF CALIFORNIA

The State of California or its officers or agents shall not be responsible for the accuracy or completeness of electronic copies of this plan sheet.

To get to the Caltrans web site, go to: http://www.dot.ca.gov

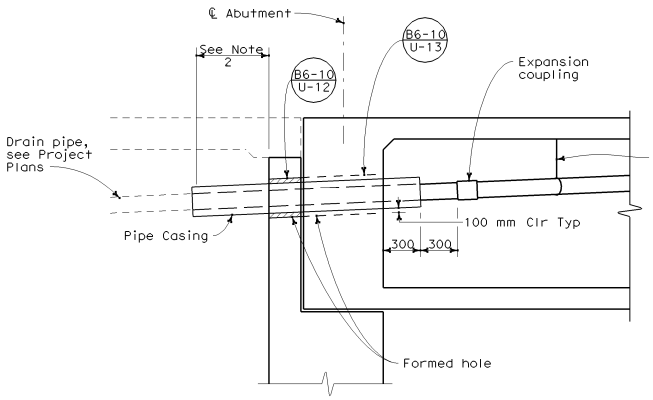

ABUTMENT

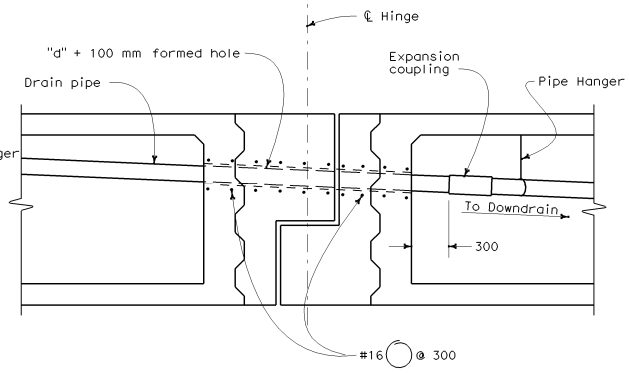

"d" nominal pipe size

DECK DRAIN PIPE DETAIL

HINGE

NOTE

1. Pipe casing OD = "d"+100 mm (6 mm Min wall thickness)
2. Unless otherwise shown on Project Plans, casing shall extend to the greater of 1.5 m beyond the end of approach slab or 6 m beyond the back of abutment.

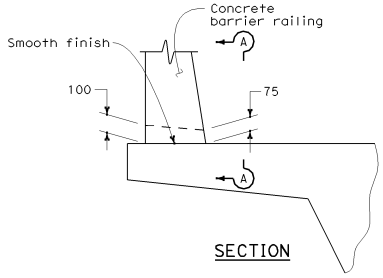

SECTION

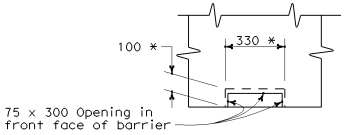

ELEVATION A-A

SCUPPER DETAIL

* At exterior face of barrier

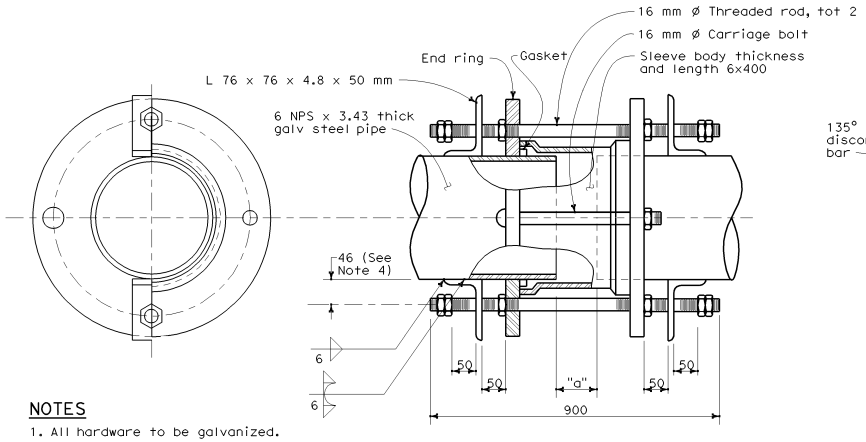

NOTES

1. All hardware to be galvanized.
2. For "a" dimension, see Project Plans.
3. Expansion coupling with 4 bolts shown. Coupling with a greater number of bolts allowed.
4. Adjust dimension to suit coupler end ring bolt circle.

EXPANSION COUPLING

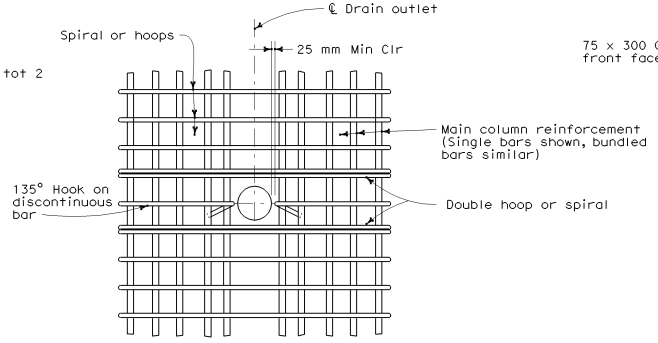

NOTE

Adjust spacing of main column reinforcement to clear drain outlet.

COLUMN REINFORCEMENT AT DRAIN OUTLET

STATE OF CALIFORNIA
DEPARTMENT OF TRANSPORTATION

DECK DRAINAGE DETAILS

NO SCALE

ALL DIMENSIONS ARE IN MILLIMETERS UNLESS OTHERWISE SHOWN

B7-8

03-26-04

Back to Table of Contents

DIST	COUNTY	ROUTE	KILOMETER POST TOTAL PROJECT	SHEET NO.	TOTAL SHEETS

REGISTERED CIVIL ENGINEER

July 1, 2004
PLANS APPROVAL DATE

REGISTERED PROFESSIONAL ENGINEER Madhwesh Raghavendrachar No. C51119 Exp. 9-30-05 CIVIL STATE OF CALIFORNIA

The State of California or its officers or agents shall not be responsible for the accuracy or completeness of electronic copies of this plan sheet.

To get to the Caltrans web site, go to: http://www.dot.ca.gov

Caltrans Metric

ABUTMENT DIAPHRAGMS

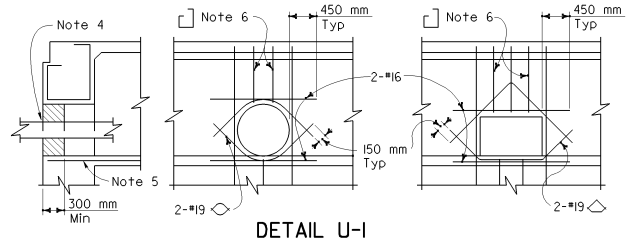

DETAIL U-1

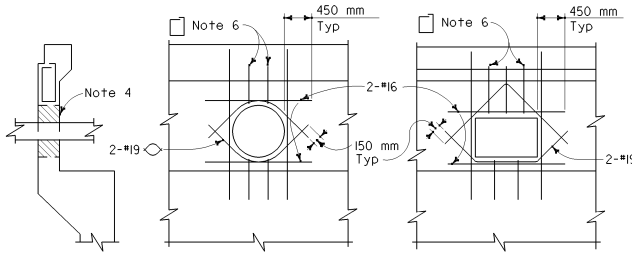

DETAIL U-2

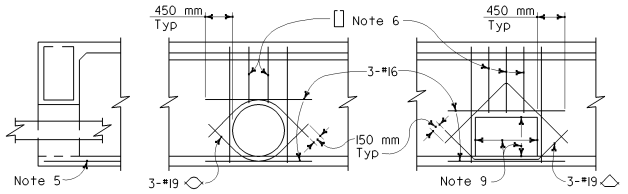

DETAIL U-3

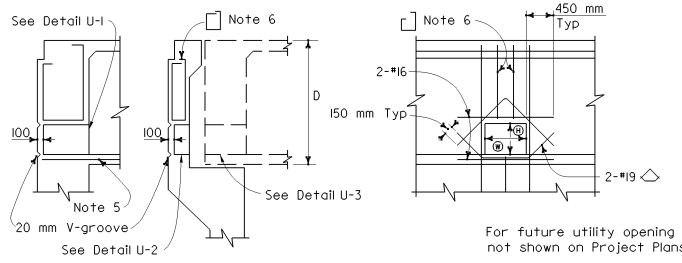

DETAIL U-4
(FOR FUTURE UTILITY OPENING)

For future utility opening dimensions not shown on Project Plans use:

Ⓗ = 1/3 D or 450 mm minimum, whichever is greater.
Ⓦ = 1/3 D or 600 mm minimum, whichever is greater.

INTERMEDIATE DIAPHRAGMS AND HINGES

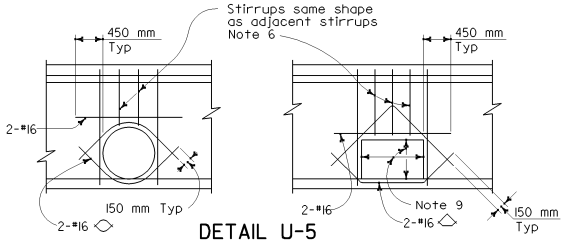

DETAIL U-5
AT INTERMEDIATE DIAPHRAGM

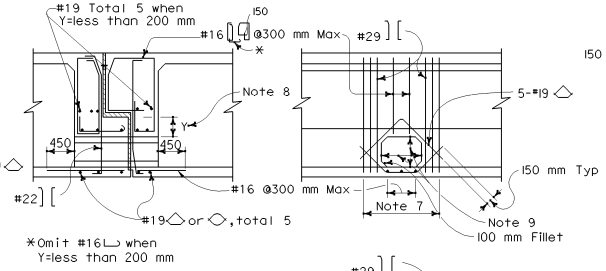

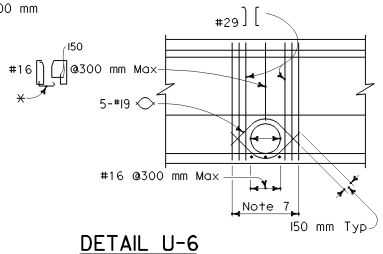

DETAIL U-6
AT HINGE

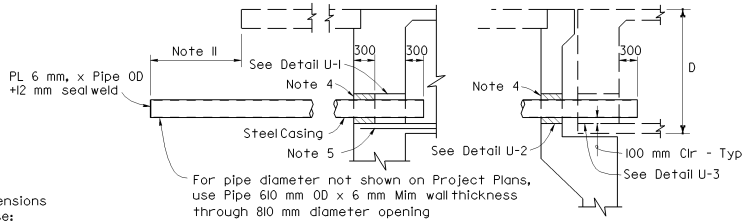

DETAIL U-8
(FOR FUTURE UTILITY PROVISIONS UNDER APPROACH SLAB)

BENT CAPS

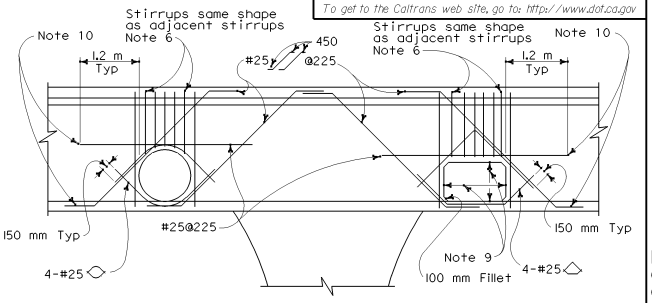

DETAIL U-7
NEAR OR BETWEEN COLUMNS

NOTES

1. The exact location, elevation, size, and direction of openings shall be in accordance with the Project Plans and as directed by the Engineer.
2. Girders not shown. See Project Plans.
3. All reinforcement detailed to be placed in addition to reinforcement shown on Project Plans.
4. Seal utilities at abutments with concrete or mortar, after tightly wrapping utility with 2 layers of 7 kg building paper. If structure is prestressed, seal to be placed after stressing is completed.
5. Main reinforcement to clear opening.
6. Reinforcement to be same bar size and $\frac{2}{3}$ the spacing of adjacent reinforcement shown on Project Plans.
7. Replace each set of 2-#29 bars cut off by opening. Place $\frac{1}{2}$ on each side of opening.
8. When "Y" is less than 200 mm, extend top of opening to bottom of bearing seat elevation.
9. For future utility opening dimensions, see Project Plans and Detail U-4.
10. When there is insufficient space to place reinforcement as shown, hook reinforcement into exterior girder.
11. Unless otherwise shown on Project Plans, casing shall extend to the greater of 1.5 m beyond the end of the approach slab, 1.5 m beyond the end of the adjacent wingwall, or 6 m beyond the back of the abutment.

STATE OF CALIFORNIA
DEPARTMENT OF TRANSPORTATION

UTILITY OPENING BOX GIRDER

NO SCALE

ALL DIMENSIONS ARE IN MILLIMETERS UNLESS OTHERWISE SHOWN

B7-10

06-07-04

2004 Std PLAN B7-10

Back to Table of Contents

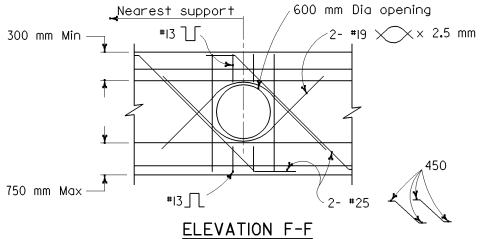

ELEVATION F-F

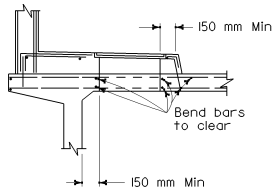

SECTION C-C

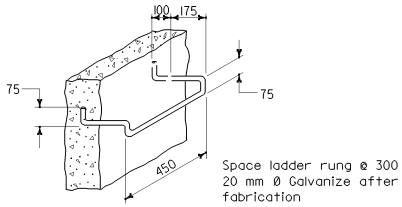

BAR STEP

LADDER RUNG DETAILS

DETAIL U44

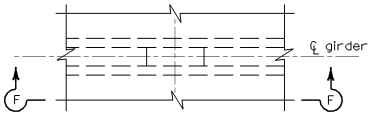

PART PLAN

GIRDER STEM ACCESS OPENING

DETAIL U41

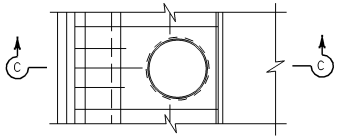

PART PLAN

SIDEWALK ACCESS OPENING

DETAIL U42

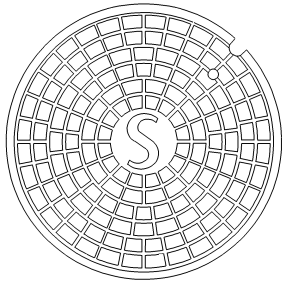

TOP OF MANHOLE COVER

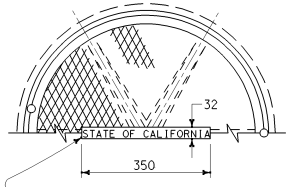

Letters 25 mm high. No other inscription to appear on exposed surfaces.

TOP OF MANHOLE FRAME & COVER

NOTES

1. For exact location of openings see other sheets.
2. Location and size of manholes may be modified as directed by the Engineer, provided minimum dimensions are maintained.
3. All reinforcement detailed to be placed in addition to reinforcement shown on other sheets.

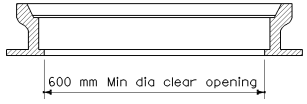

SECTION THROUGH FRAME

NON-ROCKING MANHOLE FRAME & COVER FOR DECKS

DETAIL U45

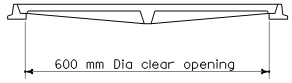

SECTION THROUGH FRAME & COVER

MANHOLE FRAME & COVER FOR SIDEWALKS

DETAIL U46

NOTES

1. The manhole frame and cover shall be made of gray cast iron. Mass for payment is 200 kg.
2. All parts of the manhole frame and cover except machined surfaces shall be coated with asphaltum paint.
3. The manhole frame and cover shall be tested for accuracy of fit and shall be marked in sets before delivery. The cover shall fit the frame snugly but not tightly.
4. Covers for use on sewer structures shall bear the letters "S"; on storm drain structures the letter "D"; on openings for utilities the letter "U".
5. The mass shall not vary more than ten percent from the mass for payment.
6. Step inserts may be substituted for the standard step detail. Step inserts shall comply with State Industrial Safety requirements.

NOTE

Frame and cover shall be cast iron. Mass for payment is 110 kg.

Galvanize complete assembly after fabrication.

The mass shall not vary more than ten percent from the mass for payment.

Cover shall be supplied with bolt down or locking devices.

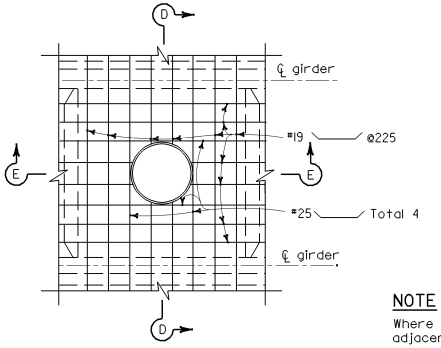

PART PLAN

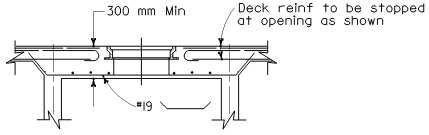

SECTION D-D

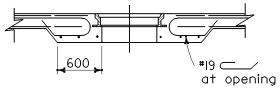

SECTION E-E

NOTE

Where manhole is located adjacent to a diaphragm or abut, substitute Half Section E-E on one side of Section E-E.

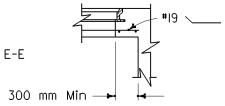

HALF SECTION E-E

DECK ACCESS OPENING

DETAIL U43

Caltrans Metric

DIST	COUNTY	ROUTE	KILOMETER POST TOTAL PROJECT	SHEET NO.	TOTAL SHEETS

REGISTERED CIVIL ENGINEER

July 1, 2004

PLANS APPROVAL DATE

REGISTERED PROFESSIONAL ENGINEER Madhwesh Raghavendrachar No. C51119 Exp. 9-30-05 CIVIL STATE OF CALIFORNIA

The State of California or its officers or agents shall not be responsible for the accuracy or completeness of electronic copies of this plan sheet.

To get to the Caltrans web site, go to: http://www.dot.ca.gov

STATE OF CALIFORNIA
DEPARTMENT OF TRANSPORTATION

UTILITY DETAILS

NO SCALE

ALL DIMENSIONS ARE IN MILLIMETERS UNLESS OTHERWISE SHOWN

B7-11

06-07-04

Back to Table of Contents

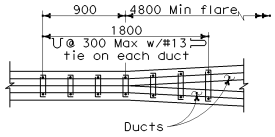

PLAN

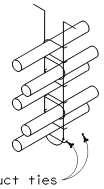

NOTE

Place closed end of duct ties in direction of flare.

STIRRUP REINFORCEMENT AT FLARE OF GIRDER STEM

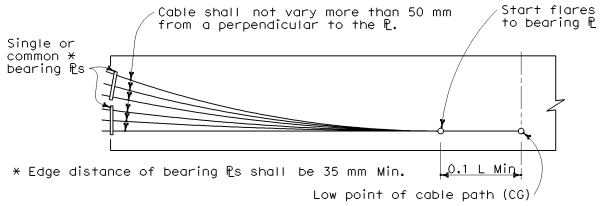

BEARING PLATE PRESTRESSING PATH

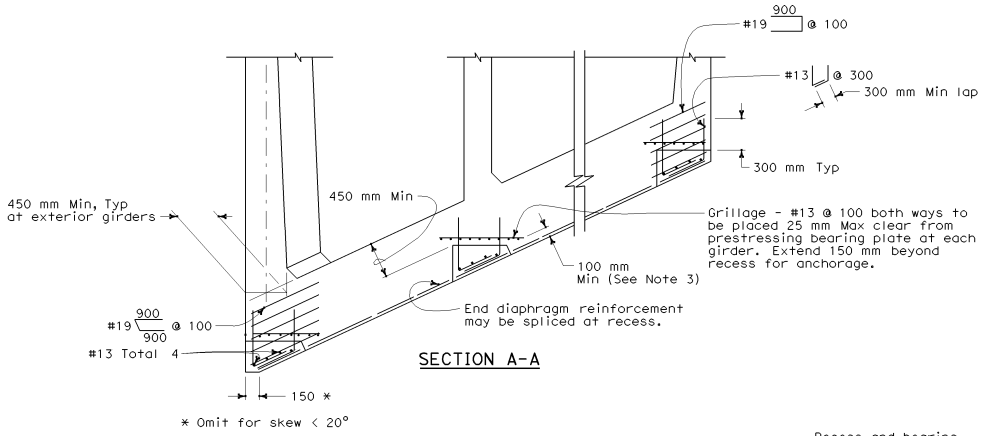

SECTION A-A

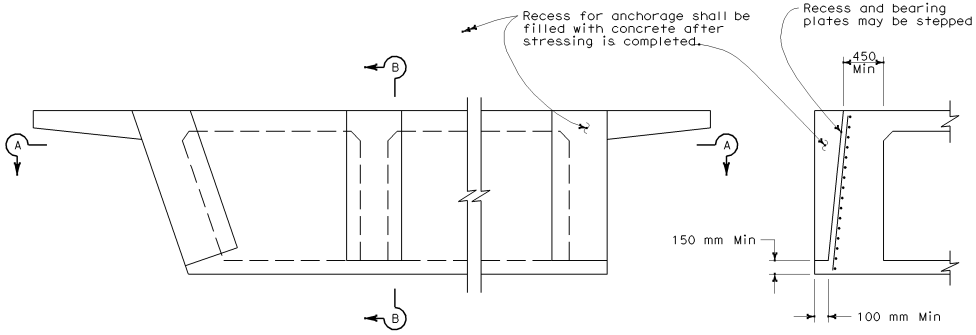

PRESTRESS ANCHORAGE DETAILS
AT SEAT TYPE ABUTMENTS

SECTION B-B

NOTES

Distribution of prestressing force:

Unless otherwise noted, the prestressing force shall be distributed with an approximately equal amount in each girder and shall be placed symmetrically about the center line of the structure. In slabs, the prestressing force shall be uniformly distributed across the slab.

Stressing sequence:

No more than ½ of the prestressing force in any girder may be applied before an equal force is applied in the adjacent girders. The maximum force variation between girders shall also not exceed the prestressing force of the largest tendon used in all girders. At no time during stressing operations will more than 1/6 of total prestressing force be applied eccentrically about the centerline of the structure.

Girder stem may be flared near anchorage to provide clearances for the particular anchorage system.

Place duct ties, as shown for flare girder stem, at each location where ducts change horizontal direction.

Bar reinforcement interfering with the prestressing tendon alignment shall be adjusted, as approved by the Engineer.

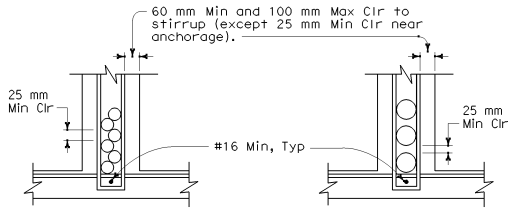

DUCTS 114 mm OD AND LESS

DUCTS OVER 114 mm OD

CLEARANCE REQUIREMENTS FOR DUCTS

NOTES

1. Duct patterns shown are for a 300 mm wide girder stem. For other widths the minimum clearances must be maintained.
2. ⊔ Stirrups may also be used. For continuous stirrups in girder stems greater than 400 mm wide (ie: at flares) use 2-#16 minimum ⊔ or ⊔.
3. 100 mm minimum is not required if this detail is used at hinge location.
4. For additional details, see Standard Plan B7-1.
5. Approval of the Engineer is required for deviations.

STATE OF CALIFORNIA
DEPARTMENT OF TRANSPORTATION

CAST-IN-PLACE PRESTRESSED GIRDER DETAILS

NO SCALE

ALL DIMENSIONS ARE IN
MILLIMETERS UNLESS OTHERWISE SHOWN

B8-5

Caltrans Metric

DIST	COUNTY	ROUTE	KILOMETER POST TOTAL PROJECT	SHEET NO.	TOTAL SHEETS

REGISTERED CIVIL ENGINEER

July 1, 2004
PLANS APPROVAL DATE

REGISTERED PROFESSIONAL ENGINEER
Michael Pope
No. C54503
Exp. 12-31-05
CIVIL
STATE OF CALIFORNIA

The State of California or its officers or agents shall not be responsible for the accuracy or completeness of electronic copies of this plan sheet.

To get to the Caltrans web site, go to: http://www.dot.ca.gov

06-08-04

Back to Table of Contents

DIST	COUNTY	ROUTE	KILOMETER POST TOTAL PROJECT	SHEET NO.	TOTAL SHEETS

REGISTERED CIVIL ENGINEER

July 1, 2004
PLANS APPROVAL DATE

REGISTERED PROFESSIONAL ENGINEER NAHED ABDIN No. C48719 Exp. 9-30-04 CIVIL STATE OF CALIFORNIA

The State of California or its officers or agents shall not be responsible for the accuracy or completeness of electronic copies of this plan sheet.

To get to the Caltrans web site, go to: http://www.dot.ca.gov

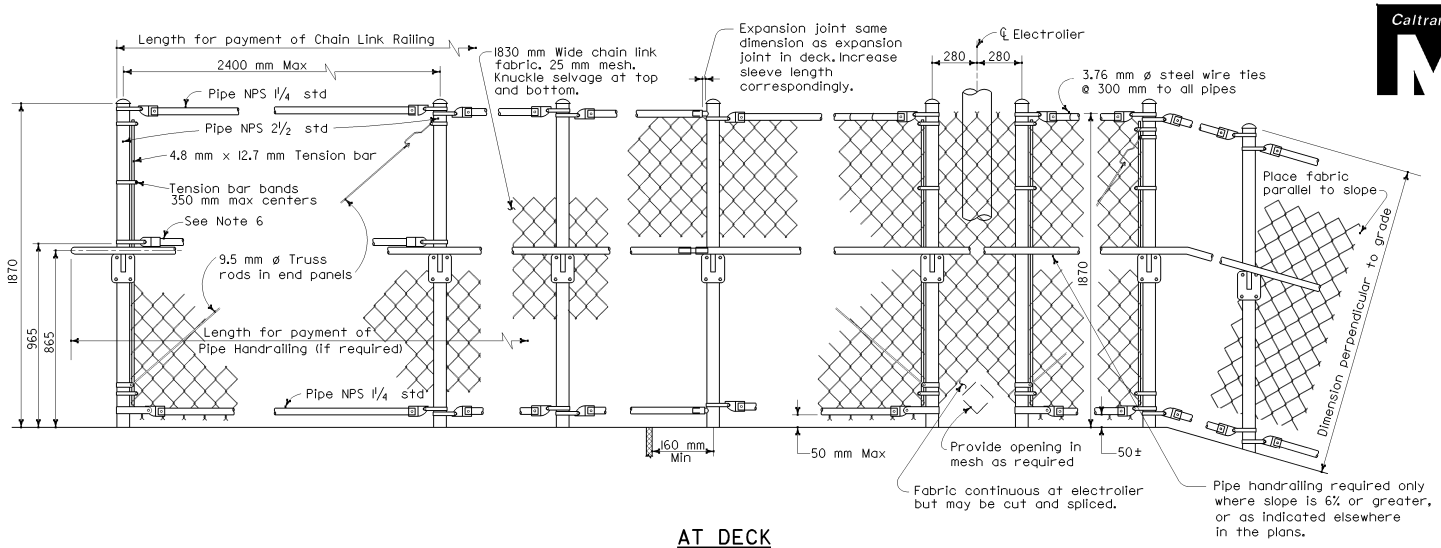

END POST

INTERMEDIATE POSTS

AT DECK EXPANSION JOINTS

AT ELECTROLIER

ON SLOPES

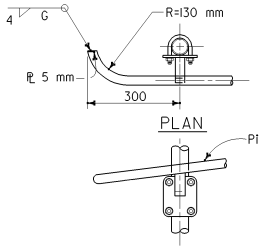

ELEVATION

PIPE HANDRAILING AT END

ALTERNATIVE DETAILS

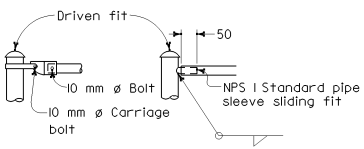

TYPICAL CONNECTION DETAILS

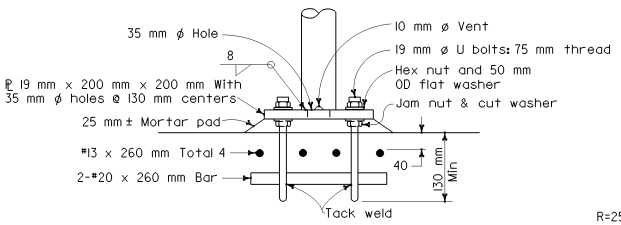

ANCHORAGE DETAIL

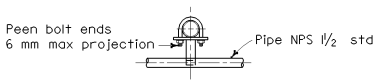

PLAN

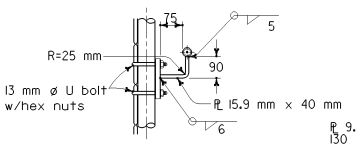

SIDE VIEW

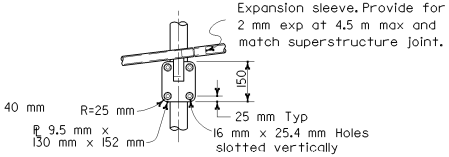

ELEVATION

PIPE HANDRAILING BRACKET

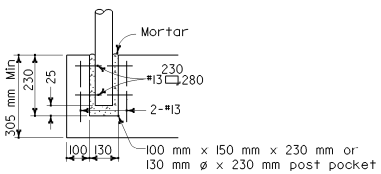

ALTERNATIVE ANCHORAGE DETAIL

May be used when thickness of concrete is 305 mm or more.

NOTES

1. Railing assembly except chain link fabric to be galvanized after fabrication.
2. Peen all bolt threads.
3. Railing shall conform to horizontal and vertical alignment. Posts shall be vertical. Top and bottom pipes shall be bent if radius is 45.0 m or less; may be on 2.4 m chords if radius is over 45.0 m.
4. When railing is on slope, 1830 mm chain link fabric shall be placed parallel to slope.
5. Alternative details may be submitted by Contractor for Engineer's approval.
6. Additional pipe NPS 1¼ standard required when radius is less than 45.0 m.

STATE OF CALIFORNIA
DEPARTMENT OF TRANSPORTATION

CHAIN LINK RAILING

NO SCALE

ALL DIMENSIONS ARE IN MILLIMETERS UNLESS OTHERWISE SHOWN

B11-7

07-08-04

Back to Table of Contents

DIST	COUNTY	ROUTE	KILOMETER POST TOTAL PROJECT	SHEET NO.	TOTAL SHEETS

REGISTERED CIVIL ENGINEER

July 1, 2004
PLANS APPROVAL DATE

REGISTERED PROFESSIONAL ENGINEER NAHED ABDIN No. C48719 Exp. 9-30-04 CIVIL STATE OF CALIFORNIA

The State of California or its officers or agents shall not be responsible for the accuracy or completeness of electronic copies of this plan sheet.

To get to the Caltrans web site, go to: http://www.dot.ca.gov

Caltrans Metric

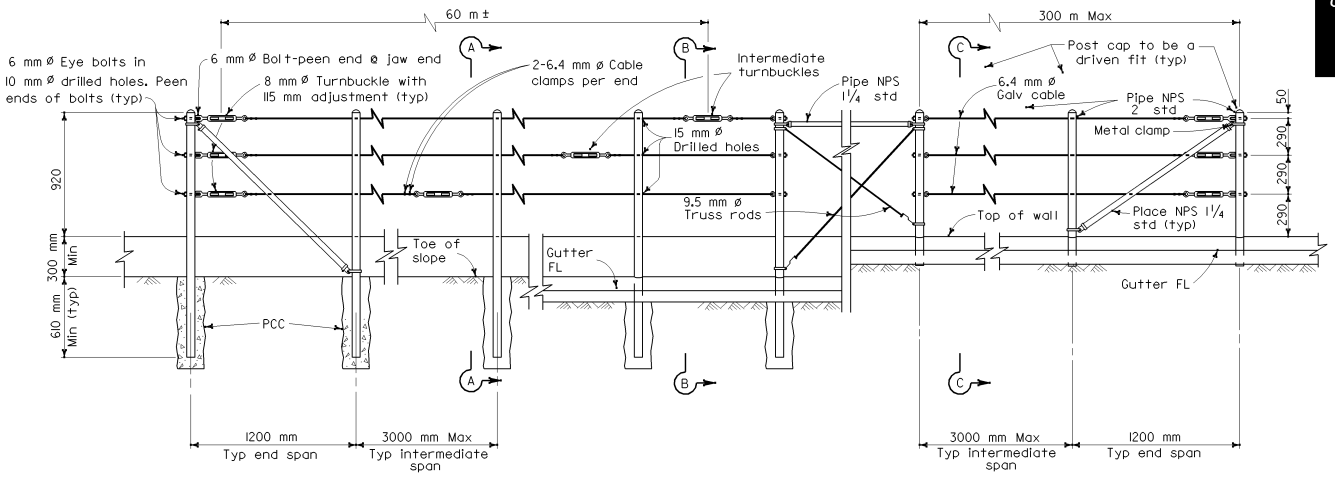

EXISTING WALL (WITHOUT GUTTER)
Existing

RETAINING WALL (WITH GUTTER)
Existing

RETAINING WALL (WITH GUTTER)
New construction

ELEVATION

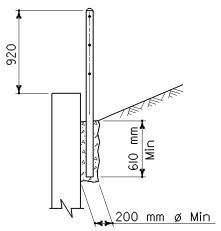

SECTION A-A
Existing

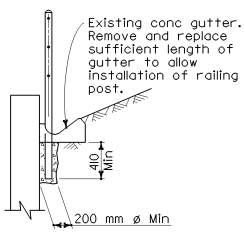

SECTION B-B
Existing

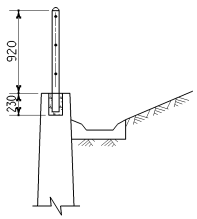

SECTION C-C
New construction

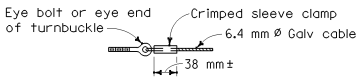

ALTERNATIVE CABLE CONNECTION

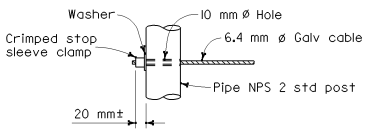

ALTERNATIVE DEAD END ANCHORAGE

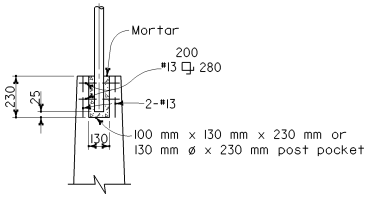

POST POCKET

NOTES

1. Maximum distance between turnbuckles shall be 60 m.
2. Intermediate turnbuckles to be placed in adjacent spans.
3. Cable shall not be spliced between intermediate turnbuckles and end posts.
4. All posts, cable, and hardware to be galvanized.
5. Posts to be vertical.
6. Alignment of holes in posts may vary to conform to slope of top of retaining wall.
7. The Contractor shall verify all dependent dimensions in the field before ordering or fabricating any material.
8. Alternative details may be submitted by the Contractor for approval by the Engineer.
9. Line posts shall be braced horizontally and trussed diagonally in both directions at intervals not to exceed 300 m.
10. Post pockets to be centered in top of wall.
11. Typical end spans, braced in both directions, shall be constructed at changes in line where the angle of deflection is 15° or more.
12. Provide thimbles at all cable loops.

STATE OF CALIFORNIA
DEPARTMENT OF TRANSPORTATION

CABLE RAILING

NO SCALE

ALL DIMENSIONS ARE IN MILLIMETERS UNLESS OTHERWISE SHOWN

B11-47

07-08-04

Back to Table of Contents

DIST	COUNTY	ROUTE	KILOMETER POST TOTAL PROJECT	SHEET NO.	TOTAL SHEETS

Caltrans Metric

REGISTERED CIVIL ENGINEER

July 1, 2004
PLANS APPROVAL DATE

REGISTERED PROFESSIONAL ENGINEER NAHED ABDIN No. C48719 Exp. 9-30-04 CIVIL STATE OF CALIFORNIA

The State of California or its officers or agents shall not be responsible for the accuracy or completeness of electronic copies of this plan sheet.

To get to the Caltrans web site, go to: http://www.dot.ca.gov

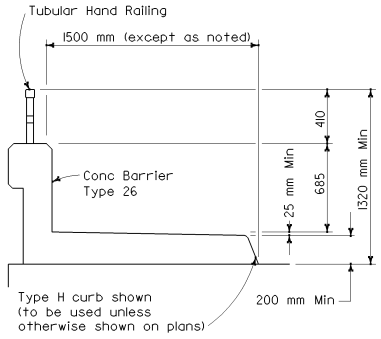

TYPICAL SECTION

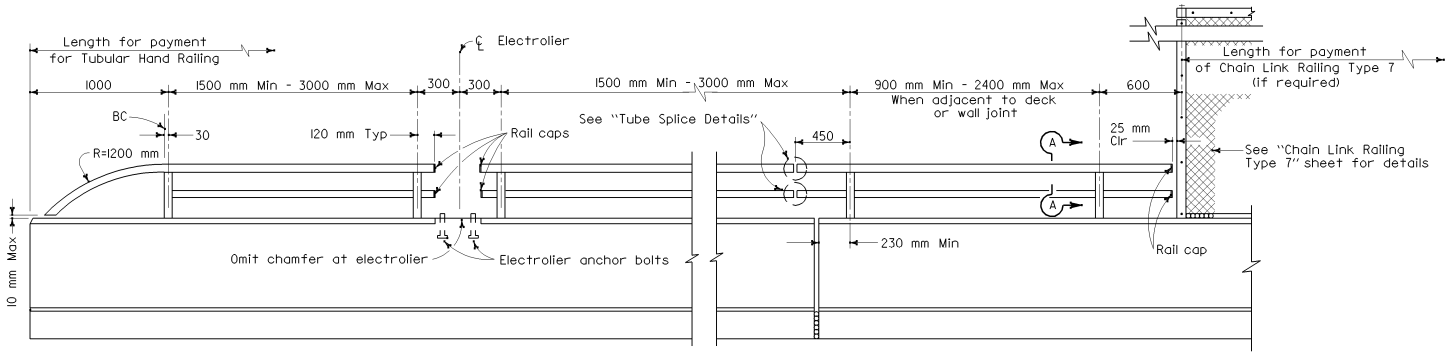

ELEVATION

RAIL CAP
(TS 76 x 51 x 4.8 similar)

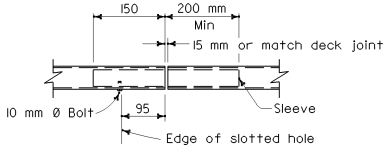

VIEW G-G

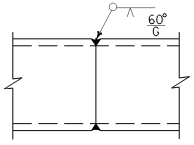

TUBE-WELDED SPLICE

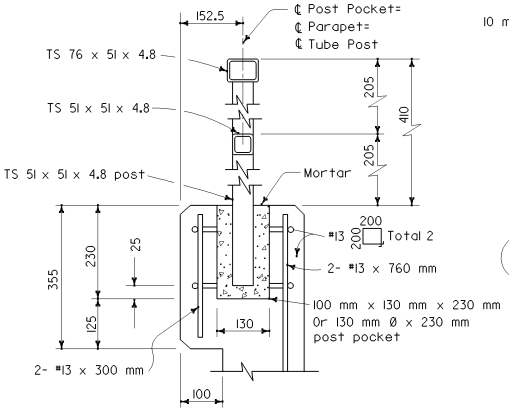

POST ANCHORAGE DETAILS

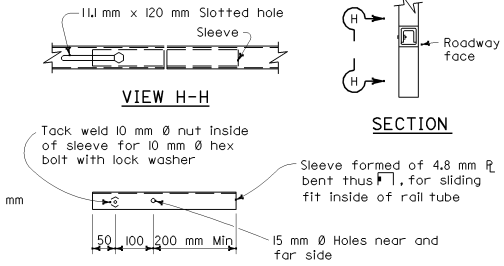

VIEW H-H

SLEEVE

TUBE SPLICE DETAILS
(TS 76 x 51 x 4.8 similar)

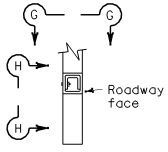

SECTION

NOTES

10 mm Ø Nut tack welded to sleeve may be replaced by drilled and tapped hole in sleeve.

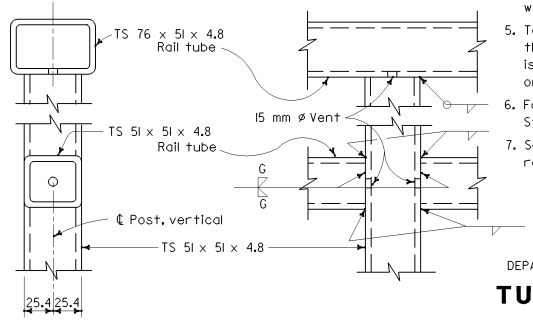

SECTION A-A

ELEVATION

RAIL CONNECTION DETAILS

NOTES

1. Galvanize rail assembly after fabrication.
2. Post shall be normal to railing.
3. Rail tubes shall be shop bent or fabricated to fit horizontal curve when radius is less than 300 m.
4. Tube splices shall be located in the tubes spanning deck or wall joints. Increase joint width in tubes to match expansion joint width and increase sleeve length correspondingly.
5. Top rail tube shall be continuous over not less than two posts except a short post spacing is permitted near deck or wall joints, electroliers, or other rail discontinuities as noted.
6. For details and reinforcement not shown see Standard Plan B11-54.
7. See project plans for limits of tubular hand railing.

STATE OF CALIFORNIA
DEPARTMENT OF TRANSPORTATION

TUBULAR HAND RAILING

NO SCALE

ALL DIMENSIONS ARE IN MILLIMETERS UNLESS OTHERWISE SHOWN

B11-51

2004 Std PLAN B11-51

07-08-04

Back to Table of Contents

DIST	COUNTY	ROUTE	KILOMETER POST TOTAL PROJECT	SHEET NO.	TOTAL SHEETS

REGISTERED CIVIL ENGINEER

July 1, 2004
PLANS APPROVAL DATE

REGISTERED PROFESSIONAL ENGINEER NAHED ABDIN No. C48719 Exp. 9-30-04 CIVIL STATE OF CALIFORNIA

The State of California or its officers or agents shall not be responsible for the accuracy or completeness of electronic copies of this plan sheet.

To get to the Caltrans web site, go to: http://www.dot.ca.gov

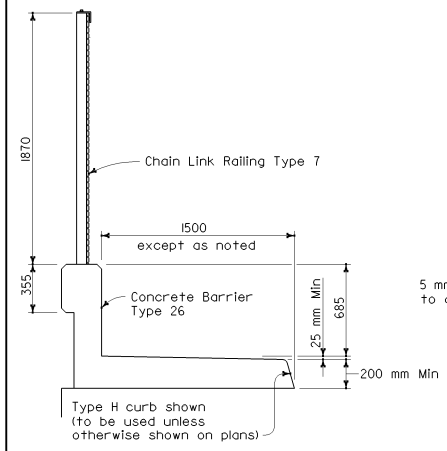

TYPICAL SECTION

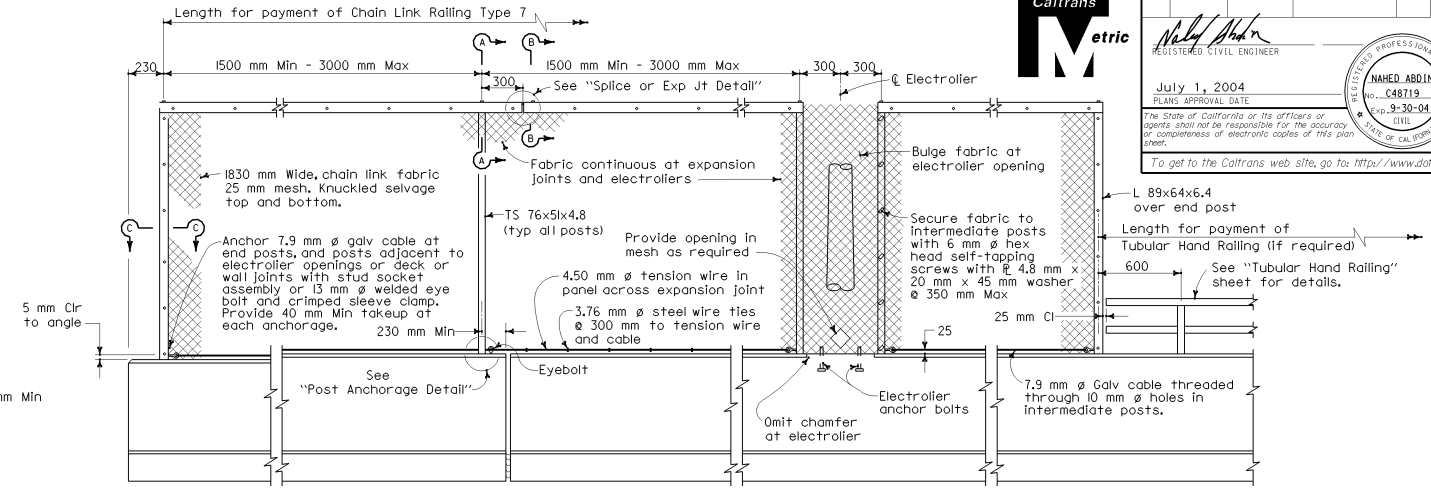

END POST | DECK OR WALL JOINT | ELECTROLIER | TUBULAR HAND RAILING

ELEVATION

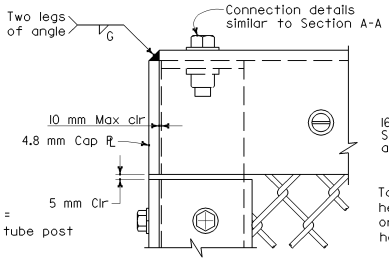

END POST ELEVATION

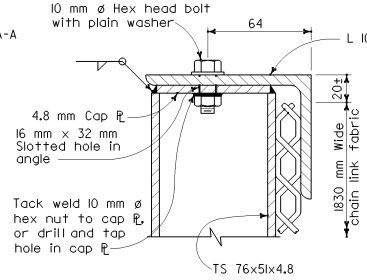

SECTION A-A

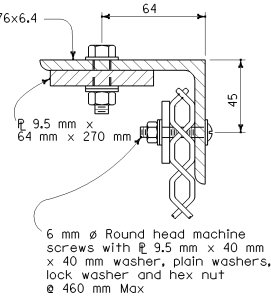

SECTION B-B

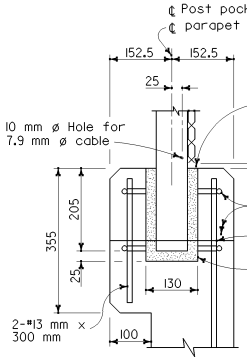

POST ANCHORAGE DETAIL

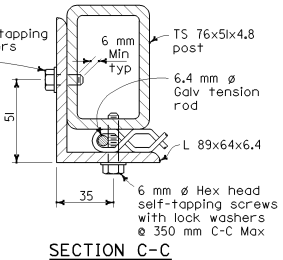

SECTION C-C

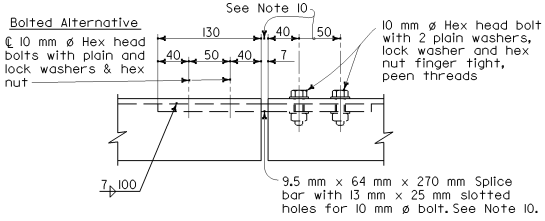

SPLICE OR EXPANSION JOINT DETAIL

NOTES

1. Railing assembly except chain link fabric to be galvanized after fabrication.
2. Posts shall be vertical.
3. Railing shall conform to horizontal and vertical alignment. When railing is placed on a curved horizontal alignment with radius of 45 m or less, thread the 7.9 mm ø cable through 10 mm ø welded eye rods embedded 100 mm into the top of the concrete parapet and equally spaced to limit the midordinate distance between the 7.9 mm ø cable and the curve to 25 mm maximum. Horizontal angle shall be bent to conform to horizontal alignment if radius is 45 m or less and may be on 3 m chords if radius is over 45 m.
4. Horizontal angle shall be continuous over not less than two intermediate posts, except that a shorter length is permitted at expansion joints, electroliers and other rail discontinuities.
5. When rail is on slope, place fabric parallel to slope.
6. Alternative details may be submitted by Contractor for Engineer's approval.
7. For details and reinforcement not shown see Standard Plan B11-54.
8. See Project Plans for limits of Chain Link Railing Type 7.
9. Provide thimbles at all cable loops.
10. Expansion joint same dimension as expansion joint in deck or wall. Increase slotted hole length and splice bar length correspondingly.

STATE OF CALIFORNIA
DEPARTMENT OF TRANSPORTATION

CHAIN LINK RAILING TYPE 7

NO SCALE

ALL DIMENSIONS ARE IN MILLIMETERS UNLESS OTHERWISE SHOWN

B11-52

07-08-04

Back to Table of Contents

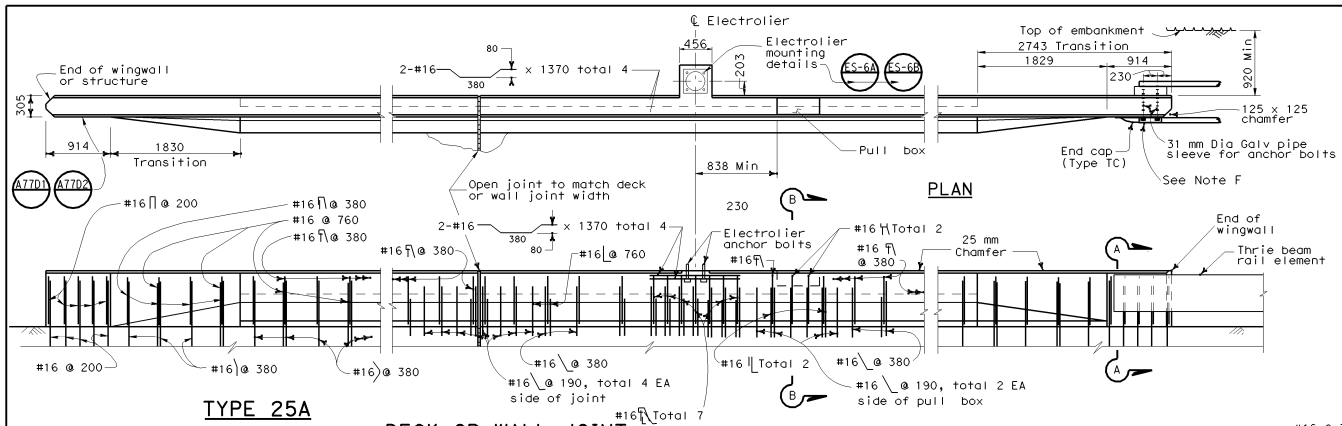

PLAN

TYPE 25A

DECK OR WALL JOINT

ELECTROILER

ELEVATION

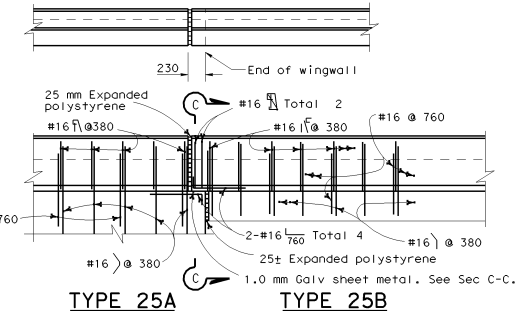

TYPE 25A

TYPE 25B

Type 25A and 25B details are similar to Type 25 except as noted

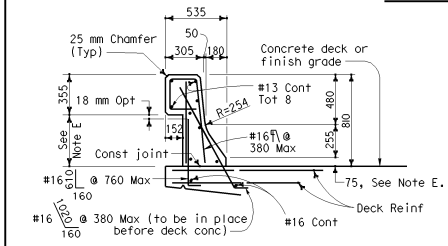

TYPE 25

Concrete: 0.24 m^3 per lineal meter
Reinforcing: 24.2 kg per lineal meter

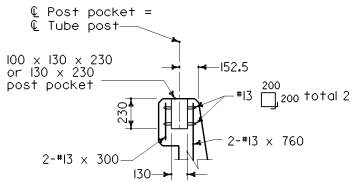

POST ANCHORAGE DETAIL

See Chain Link Railing or Tubular Hand Railing Standard Plans for further details.

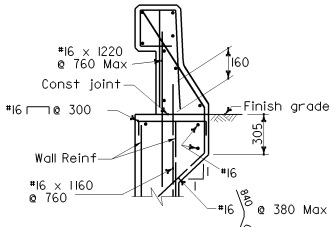

TYPE 25A

Concrete: 0.24 m^3 per lineal meter
Reinforcing: 37.9 kg per lineal meter

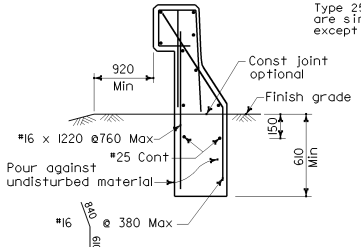

TYPE 25B

Concrete: 0.48 m^3 per lineal meter
Reinforcing: 33.9 kg per lineal meter

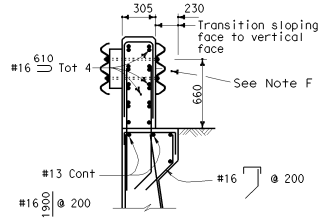

SECTION A-A

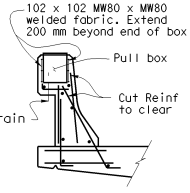

SECTION B-B

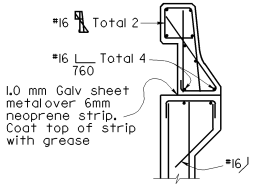

SECTION C-C

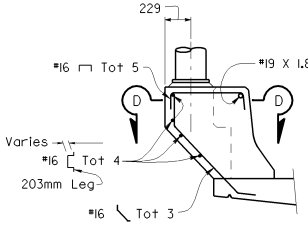

SIDE VIEW

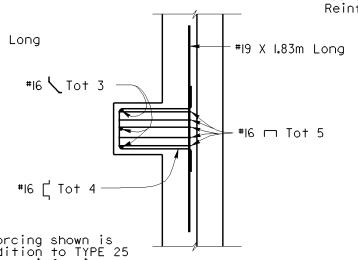

SECTION D-D

NOTE

Reinforcing shown is in addition to TYPE 25 Barrier reinforcing.

PEDESTAL

NOTES

A. Walls are to be backfilled before barrier is placed.

B. Clearance to reinforcing steel in barrier to be 25 mm, except as noted. Longitudinal reinforcement to stop at all expansion joints.

C. See Project Plans for electrolier locations and pull box type.

D. For electrical details, see Standard Plans ES-9A, 9B, 9C, 9D, and 9E.

E. Dimensions may vary with cross slope and with certain thickness of surfacing. See Project Plans.

F. For typical transition railing connection details not shown, see Standard Plan A77J4.

Caltrans Metric

DIST	COUNTY	ROUTE	KILOMETER POST TOTAL PROJECT	SHEET NO.	TOTAL SHEETS

REGISTERED CIVIL ENGINEER

July 1, 2004
PLANS APPROVAL DATE

REGISTERED PROFESSIONAL ENGINEER NAHED ABDIN No. C48719 Exp. 9-30-04 CIVIL STATE OF CALIFORNIA

The State of California or its officers or agents shall not be responsible for the accuracy or completeness of electronic copies of this plan sheet.

To get to the Caltrans web site, go to: http://www.dot.ca.gov

STATE OF CALIFORNIA
DEPARTMENT OF TRANSPORTATION

CONCRETE BARRIER TYPE 25

NO SCALE

ALL DIMENSIONS ARE IN MILLIMETERS UNLESS OTHERWISE SHOWN

B11-53

07-08-04

Back to Table of Contents

DIST	COUNTY	ROUTE	KILOMETER POST TOTAL PROJECT	SHEET NO.	TOTAL SHEETS

REGISTERED CIVIL ENGINEER

July 1, 2004
PLANS APPROVAL DATE

REGISTERED PROFESSIONAL ENGINEER NAHED ABDIN No. C48719 Exp. 9-30-04 CIVIL STATE OF CALIFORNIA

The State of California or its officers or agents shall not be responsible for the accuracy or completeness of electronic copies of this plan sheet.

To get to the Caltrans web site, go to: http://www.dot.ca.gov

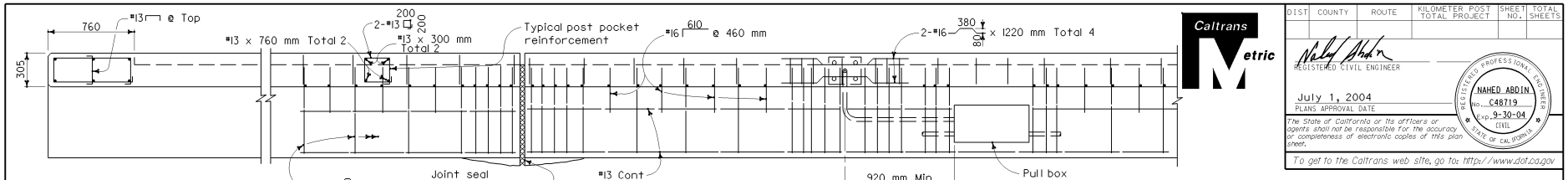

PLAN

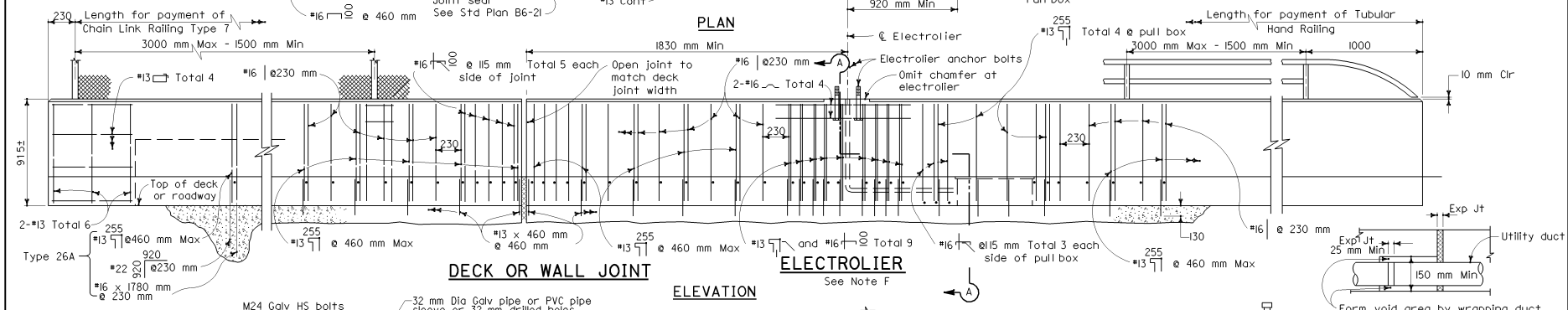

DECK OR WALL JOINT

ELECTROLIER
See Note F

ELEVATION

UTILITY DUCT EXPANSION JOINT

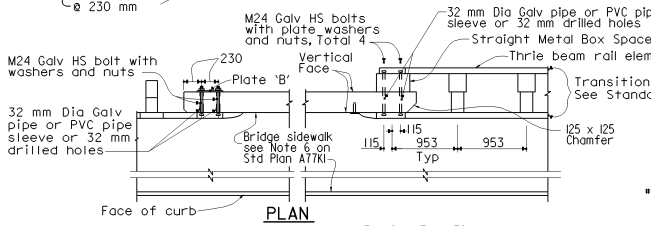

PLAN

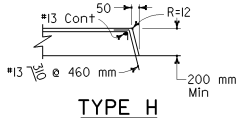

TYPE H

To be used unless otherwise shown on plans.

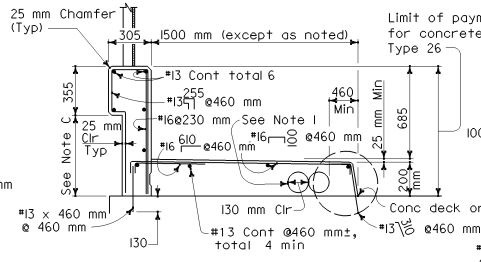

TYPE 26
On bridge deck

Concrete: 0.52 m³ per lineal meter.
Reinforcing: 31.8 kg per lineal meter.
For 1500 mm sidewalk width and 1½% deck cross slope.

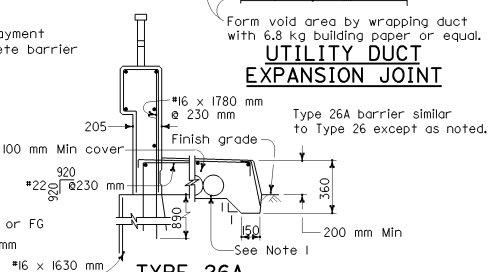

TYPE 26A
Off bridge deck

Concrete: 0.56 m³ per lineal meter
Reinforcing: 63.5 kg per lineal meter
For 1500 mm sidewalk width and 1½% deck cross slope.

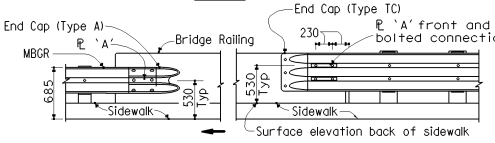

ELEVATION

METAL RAILING CONNECTION TO BRIDGE RAILING

See Note J

CURB DETAIL

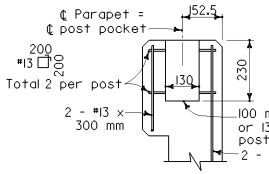

POST POCKET DETAIL

Applies to Chain Link Railing Type 7 and Tubular Hand Railing. See respective Standard Plans for additional details.

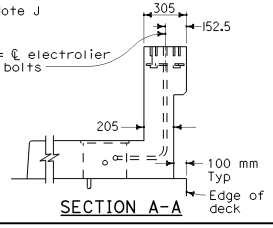

SECTION A-A

NOTES

A. For Chain Link Railing notes and details not shown, see Standard Plan B11-52.

B. For Hand Railing notes and details not shown, see Standard Plan B11-51.

C. Dimensions will vary with cross slope and with certain thicknesses of surfacing. See Project Plans.

D. Walls are to be backfilled before railing is placed.

E. Clearance to reinforcing steel in curb and railing to be 25 mm except as noted. Longitudinal reinforcement to stop at all expansion joints.

F. See Project Plans for electrolier locations and pull box type.

G. See Project Plans for limits of Chain Link Railing Type 7 and/or Tubular Hand Railing.

H. For electrical details, see Standard Plans ES-9A, 9B, 9C, 9D, and 9E.

I. A minimum of two - 130 mm round openings are required for future utilities in addition to those on other plan sheets. Openings are to be sealed at ends and extended 200 mm minimum past end of sidewalk if not used. Duct forms are to be tied down.

J. For typical metal railing connection details not shown, see Standard Plan A77K1 and A77K2.

K. This barrier is to be used only for speeds of 70 Km/h (45 MPH) or less. For speeds greater than 70 Km/h (45 MPH), pedestrians should be protected by a separation traffic barrier.

STATE OF CALIFORNIA
DEPARTMENT OF TRANSPORTATION

CONCRETE BARRIER TYPE 26

NO SCALE

ALL DIMENSIONS ARE IN MILLIMETERS UNLESS OTHERWISE SHOWN

B11-54

07-08-04

Back to Table of Contents

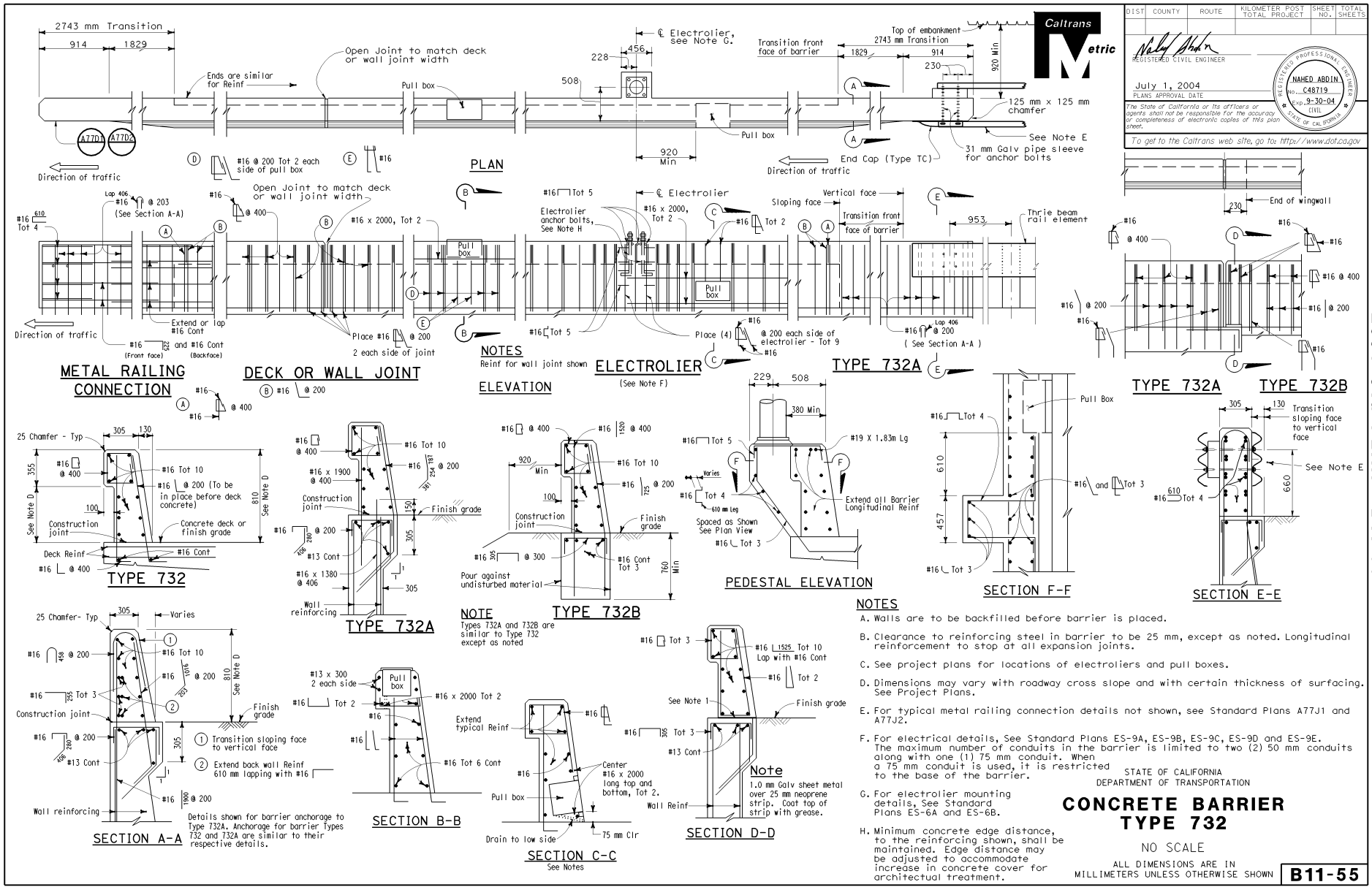

DIST	COUNTY	ROUTE	KILOMETER POST TOTAL PROJECT	SHEET NO.	TOTAL SHEETS

REGISTERED CIVIL ENGINEER

July 1, 2004
PLANS APPROVAL DATE

REGISTERED PROFESSIONAL ENGINEER NAHED ABDIN No. C48719 Exp. 9-30-04 CIVIL STATE OF CALIFORNIA

The State of California or its officers or agents shall not be responsible for the accuracy or completeness of electronic copies of this plan sheet.

To get to the Caltrans web site, go to: http://www.dot.ca.gov

NOTES

A. Walls are to be backfilled before barrier is placed.

B. Clearance to reinforcing steel in barrier to be 25 mm, except as noted. Longitudinal reinforcement to stop at all expansion joints.

C. See project plans for locations of electroliers and pull boxes.

D. Dimensions may vary with roadway cross slope and with certain thickness of surfacing. See Project Plans.

E. For typical metal railing connection details not shown, see Standard Plans A77J1 and A77J2.

F. For electrical details, See Standard Plans ES-9A, ES-9B, ES-9C, ES-9D and ES-9E. The maximum number of conduits in the barrier is limited to two (2) 50 mm conduits along with one (1) 75 mm conduit. When a 75 mm conduit is used, it is restricted to the base of the barrier.

G. For electrolier mounting details, See Standard Plans ES-6A and ES-6B.

H. Minimum concrete edge distance, to the reinforcing shown, shall be maintained. Edge distance may be adjusted to accommodate increase in concrete cover for architectual treatment.

STATE OF CALIFORNIA
DEPARTMENT OF TRANSPORTATION

CONCRETE BARRIER TYPE 732

NO SCALE

ALL DIMENSIONS ARE IN MILLIMETERS UNLESS OTHERWISE SHOWN

B11-55

07-08-04

Back to Table of Contents

DIST	COUNTY	ROUTE	KILOMETER POST TOTAL PROJECT	SHEET NO.	TOTAL SHEETS

REGISTERED CIVIL ENGINEER

July 1, 2004
PLANS APPROVAL DATE

REGISTERED PROFESSIONAL ENGINEER NAHED ABDIN No. C48719 Exp. 9-30-04 CIVIL STATE OF CALIFORNIA

The State of California or its officers or agents shall not be responsible for the accuracy or completeness of electronic copies of this plan sheet.

To get to the Caltrans web site, go to: http://www.dot.ca.gov

Caltrans Metric

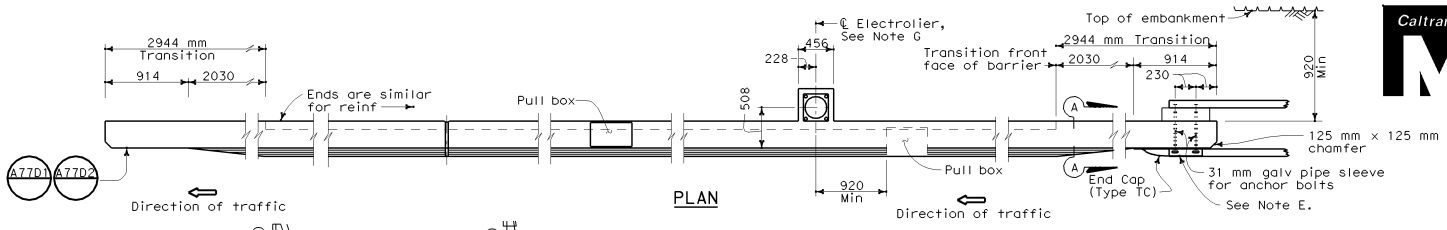

PLAN

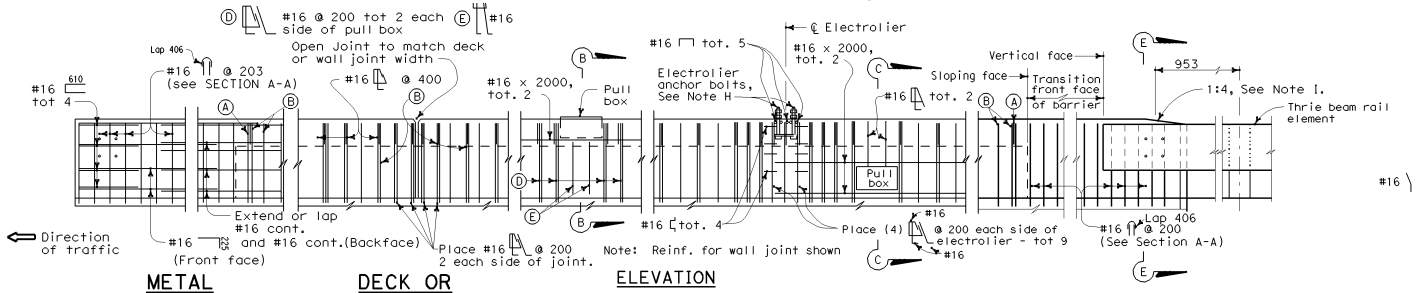

ELEVATION

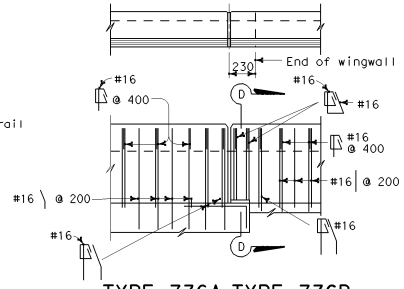

TYPE 736A TYPE 736B

METAL RAILING CONNECTION

DECK OR WALL JOINT

ELECTROLIER
See Note F

TYPE 736A

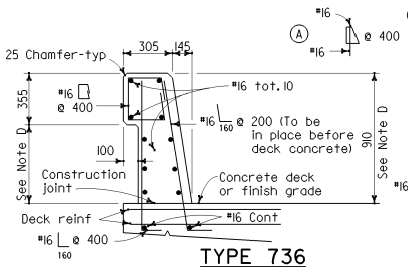

TYPE 736

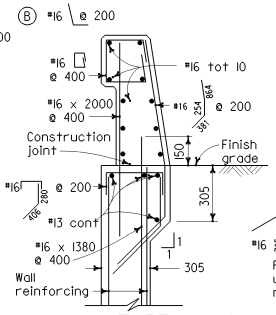

TYPE 736A

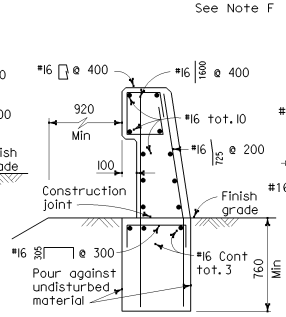

TYPE 736B

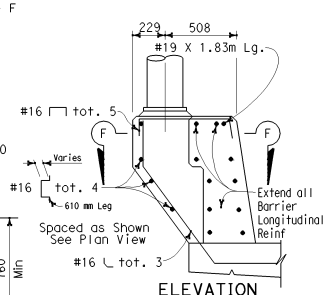

ELEVATION
PEDESTAL

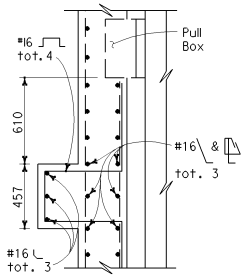

SECTION F-F

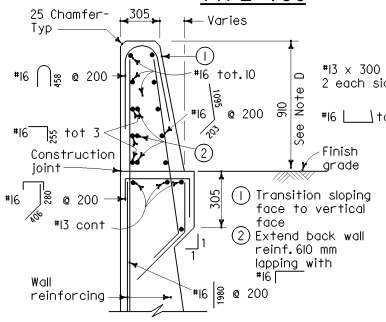

Details shown for barrier anchorage to Type 736A. Anchorage for barrier Types 736 and 736B are similar to their respective details.

SECTION A-A

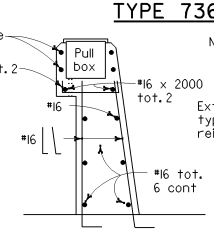

SECTION B-B

Note: Types 736A & 736B are similar to Type 736 except as noted

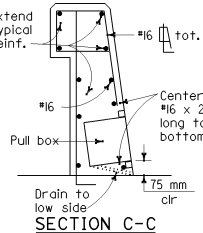

SECTION C-C
See Notes

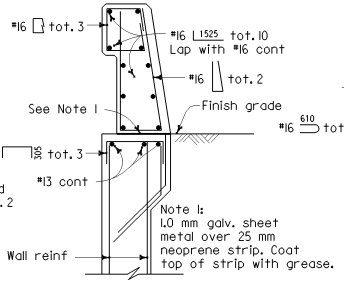

SECTION D-D

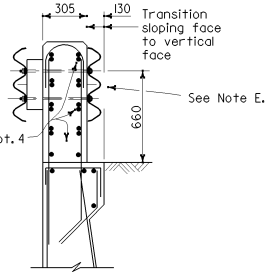

SECTION E-E
See Notes

NOTES

A. Walls are to be backfilled before barrier is placed.

B. Clearance to reinforcing steel in barrier to be 25 mm except as noted. Longitudinal reinforcement to stop at all expansion joints.

C. See Project Plans for locations of electroliers and pull boxes.

D. Dimensions may vary with roadway cross slope and with certain thickness of surfacing. See Project Plans.

E. For typical metal railing connection details not shown, see Standard Plans A77J1 and A77J2.

F. See Standard Plans ES-9A, ES-9B, ES-9C, ES-9D and ES-9E for electrical details. The maximum number of conduits in the barrier is limited to two (2) 50 mm conduits along with one (1) 75 mm conduit. When a 75 mm conduit is used, it is restricted to the base of the barrier.

G. For electrolier mounting details, See Standard Plans ES-6A and ES-6B.

H. Minimum concrete edge distance, to the reinforcing shown, shall be maintained. Edge distance may be adjusted to accommodate increase in concrete cover for architectural treatment.

I. Taper the top of the end of the bridge railing at 1:4 to match the top elevation of the thrie beam rail.

STATE OF CALIFORNIA
DEPARTMENT OF TRANSPORTATION

CONCRETE BARRIER TYPE 736

NO SCALE

ALL DIMENSIONS ARE IN MILLIMETERS UNLESS OTHERWISE SHOWN

B11-56

07-08-04

Back to Table of Contents

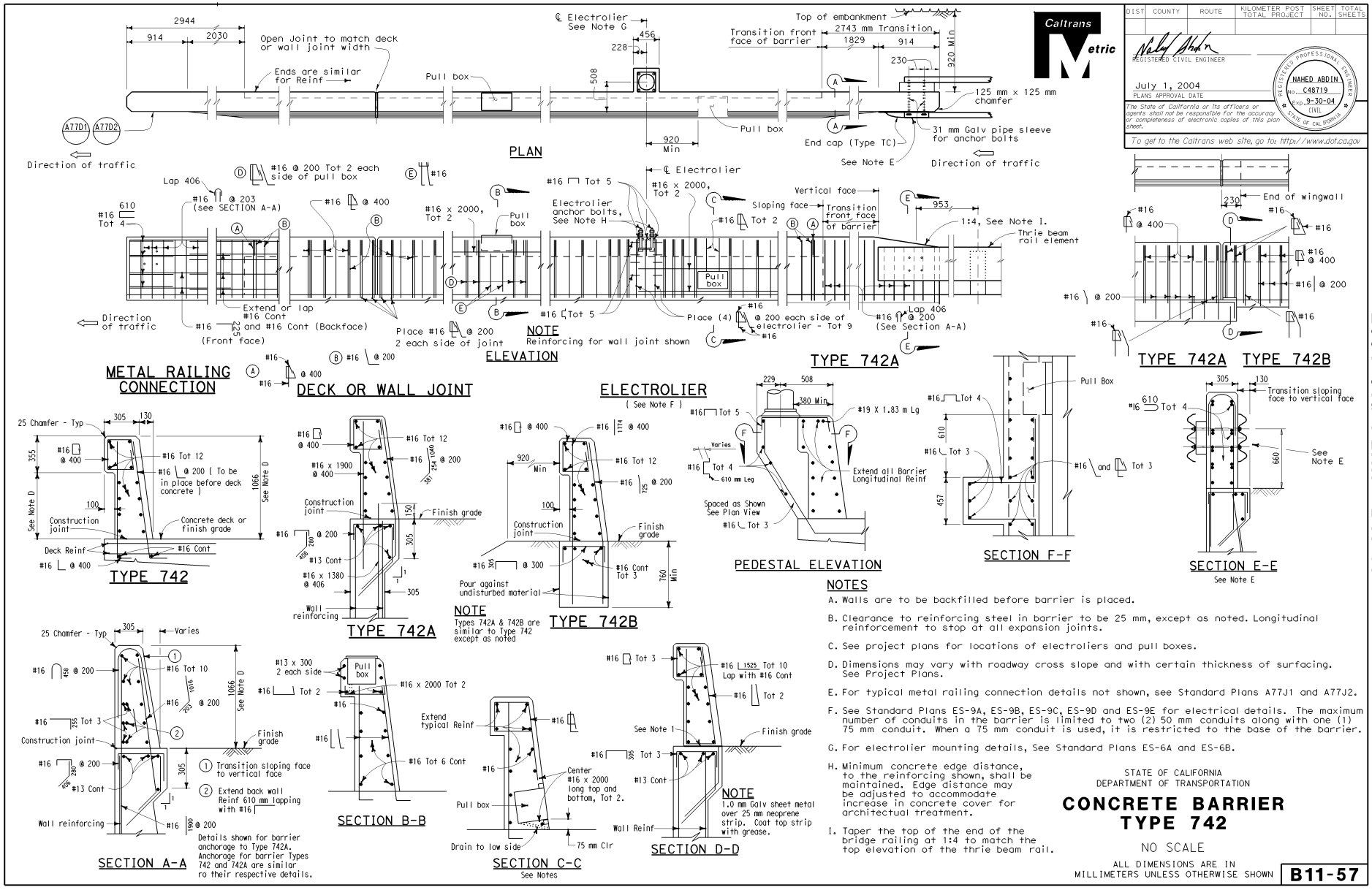

NOTES

A. Walls are to be backfilled before barrier is placed.

B. Clearance to reinforcing steel in barrier to be 25 mm, except as noted. Longitudinal reinforcement to stop at all expansion joints.

C. See project plans for locations of electroliers and pull boxes.

D. Dimensions may vary with roadway cross slope and with certain thickness of surfacing. See Project Plans.

E. For typical metal railing connection details not shown, see Standard Plans A77J1 and A77J2.

F. See Standard Plans ES-9A, ES-9B, ES-9C, ES-9D and ES-9E for electrical details. The maximum number of conduits in the barrier is limited to two (2) 50 mm conduits along with one (1) 75 mm conduit. When a 75 mm conduit is used, it is restricted to the base of the barrier.

G. For electrolier mounting details, See Standard Plans ES-6A and ES-6B.

H. Minimum concrete edge distance, to the reinforcing shown, shall be maintained. Edge distance may be adjusted to accommodate increase in concrete cover for architectual treatment.

I. Taper the top of the end of the bridge railing at 1:4 to match the top elevation of the thrie beam rail.

STATE OF CALIFORNIA
DEPARTMENT OF TRANSPORTATION

CONCRETE BARRIER TYPE 742

NO SCALE

ALL DIMENSIONS ARE IN MILLIMETERS UNLESS OTHERWISE SHOWN

B11-57

DIST	COUNTY	ROUTE	KILOMETER POST TOTAL PROJECT	SHEET NO.	TOTAL SHEETS

REGISTERED CIVIL ENGINEER

July 1, 2004
PLANS APPROVAL DATE

REGISTERED PROFESSIONAL ENGINEER NAHED ABDIN No. C48719 Exp. 9-30-04 CIVIL STATE OF CALIFORNIA

The State of California or its officers or agents shall not be responsible for the accuracy or completeness of electronic copies of this plan sheet.

To get to the Caltrans web site, go to: http://www.dot.ca.gov

07-08-04

Back to Table of Contents

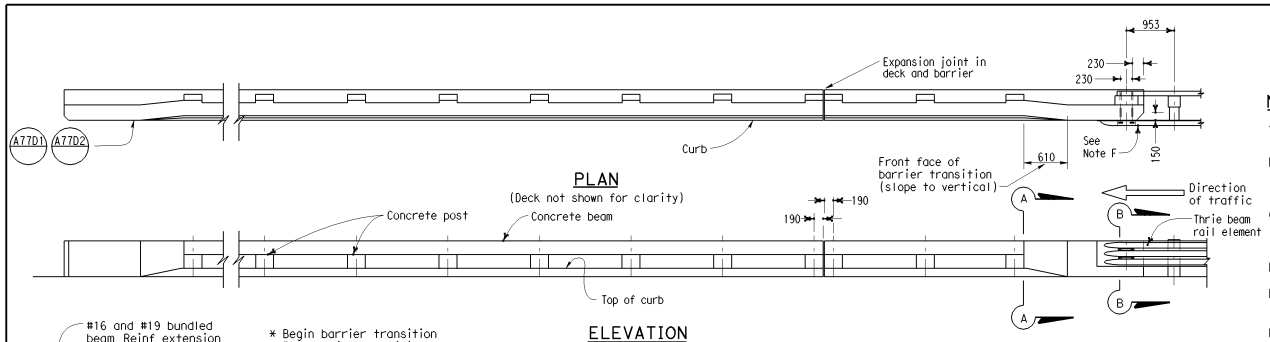

PLAN
(Deck not shown for clarity)

ELEVATION

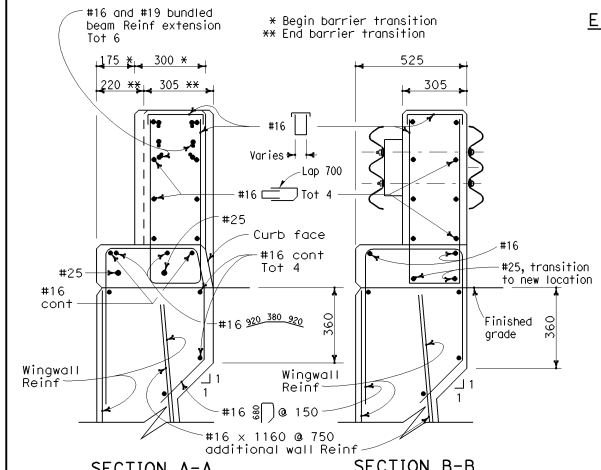

SECTION A-A

SECTION B-B

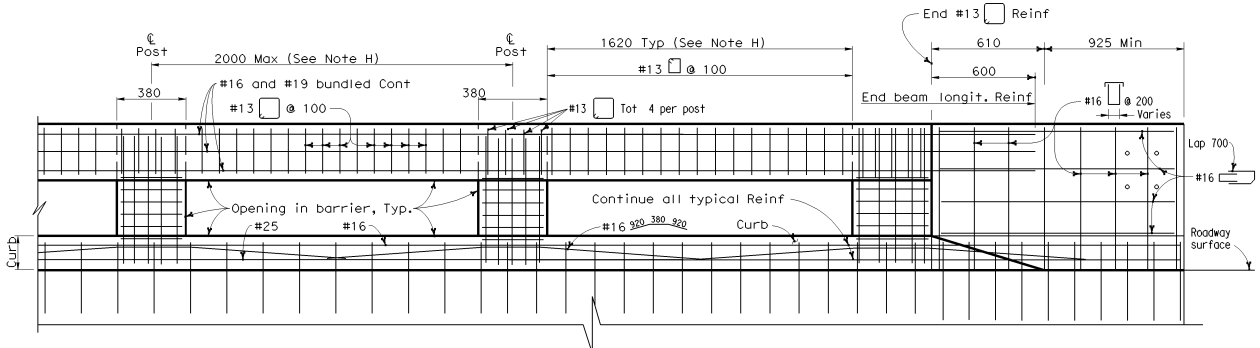

LONGITUDINAL SECTION
(Deck or wingwall reinforcing not shown)

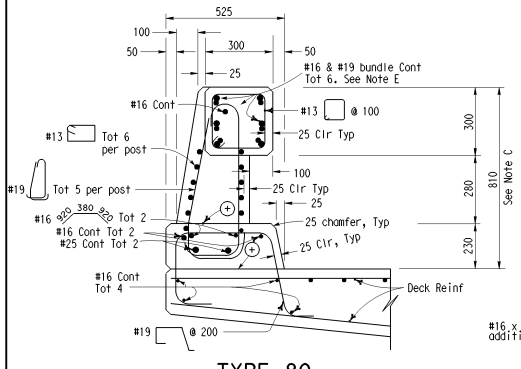

TYPE 80
⊕ Optinal construction joint

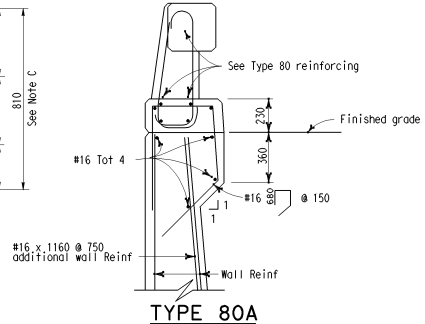

TYPE 80A

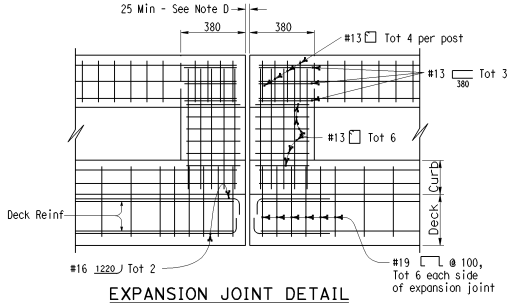

EXPANSION JOINT DETAIL

NOTES

A. Walls are to be backfilled before the barrier is placed.

B. Longitudinal reinforcing steel to stop at all expansion joints.

C. The front face dimensions are to be constant above the finish roadway profile, but the overall height will vary with certain thicknesses of surfacing and roadway slopes.

D. Expansion joint to match deck joint.

E. No lap splicing allowed on the longitudinal rail reinforcing. Splicing shall be staggered.

F. For typical metal railing connection details not shown, see Standard Plans A77J1 and A77J2.

G. Chain link railing is not allowed on Type 80 Barriers.

H. Post to be spaced equally, typically 2000 mm spacing. Post spacing may be reduced where location of hinges or expansion joints or the length of wingwalls will not accommodate the 2000 mm spacing. Maximum see-through availability is to be strived for, where 2000 mm post spacing can not be achieved.

Caltrans Metric

DIST	COUNTY	ROUTE	KILOMETER POST TOTAL PROJECT	SHEET NO.	TOTAL SHEETS

REGISTERED CIVIL ENGINEER

July 1, 2004
PLANS APPROVAL DATE

REGISTERED PROFESSIONAL ENGINEER NAHED ABDIN No. C48719 Exp. 9-30-04 CIVIL STATE OF CALIFORNIA

The State of California or its officers or agents shall not be responsible for the accuracy or completeness of electronic copies of this plan sheet.

To get to the Caltrans web site, go to: http://www.dot.ca.gov

STATE OF CALIFORNIA
DEPARTMENT OF TRANSPORTATION

CONCRETE BARRIER TYPE 80 (SHEET 1 OF 2)

NO SCALE

ALL DIMENSIONS ARE IN MILLIMETERS UNLESS OTHERWISE SHOWN

B11-60

07-08-04

Back to Table of Contents

DIST	COUNTY	ROUTE	KILOMETER POST TOTAL PROJECT	SHEET NO.	TOTAL SHEETS

REGISTERED CIVIL ENGINEER

July 1, 2004
PLANS APPROVAL DATE

REGISTERED PROFESSIONAL ENGINEER NAHED ABDIN No. C48719 Exp. 9-30-04 CIVIL STATE OF CALIFORNIA

The State of California or its officers or agents shall not be responsible for the accuracy or completeness of electronic copies of this plan sheet.

To get to the Caltrans web site, go to: http://www.dot.ca.gov

Caltrans Metric

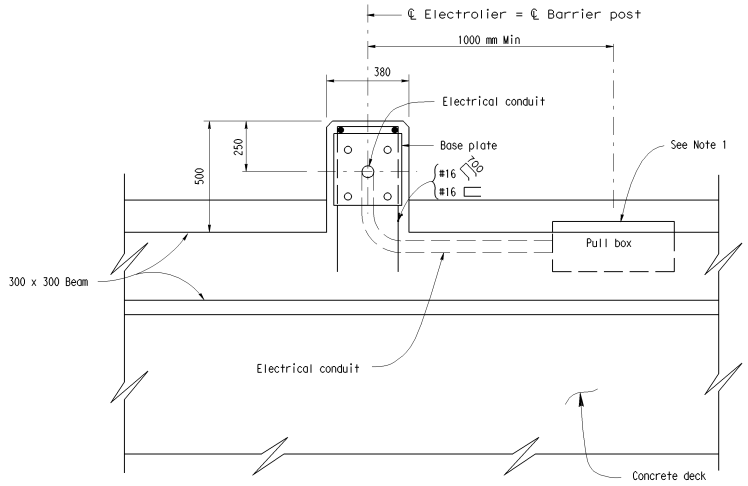

PLAN

Bend #16 and #25 Reinf in curb as required to clear pull box.

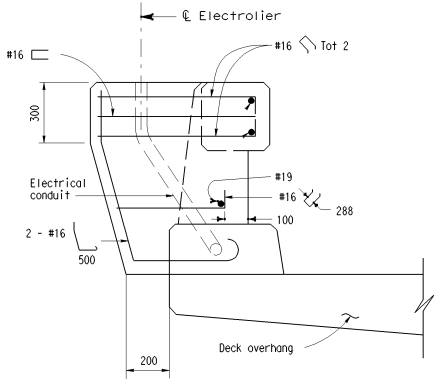

SECTION D-D

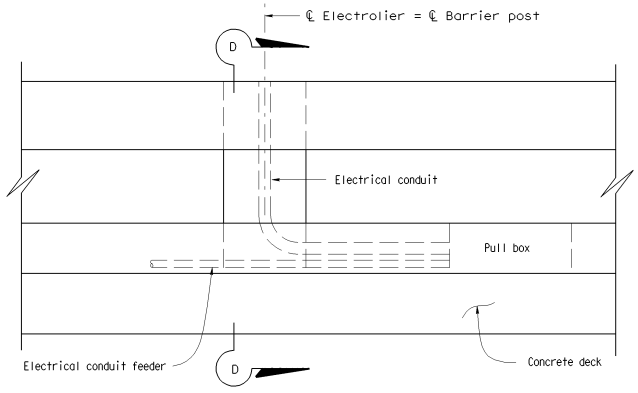

ELEVATION

BARRIER MODIFICATION FOR ELECTROLIER

See Note 4

ELECTROLIER NOTES

1. See Project Plans for electrolier and pull box locations.
2. For electrical details, see Standard Plans ES-9A, 9B, 9C, 9D, and 9E.
3. This barrier is designed to accommodate only two (2) 37 mm electrical conduit for electroliers on the structure. Any transporting of larger conduit is restricted to within the structure.
4. Only the additional reinforcing for the electrolier pedestal is shown. For other typical reinforcing for Type 80 Barrier, see Standard Plan B11-60.

STATE OF CALIFORNIA
DEPARTMENT OF TRANSPORTATION

CONCRETE BARRIER TYPE 80 (Sheet 2 of 2)

NO SCALE

ALL DIMENSIONS ARE IN MILLIMETERS UNLESS OTHERWISE SHOWN

B11-61

2004 Std PLAN B11-61

07-08-04

Back to Table of Contents

DIST	COUNTY	ROUTE	KILOMETER POST TOTAL PROJECT	SHEET NO.	TOTAL SHEETS

REGISTERED CIVIL ENGINEER

July 1, 2004
PLANS APPROVAL DATE

REGISTERED PROFESSIONAL ENGINEER NAHED ABDIN No. C48719 Exp. 9-30-04 CIVIL STATE OF CALIFORNIA

The State of California or its officers or agents shall not be responsible for the accuracy or completeness of electronic copies of this plan sheet.

To get to the Caltrans web site, go to: http://www.dot.ca.gov

Caltrans Metric

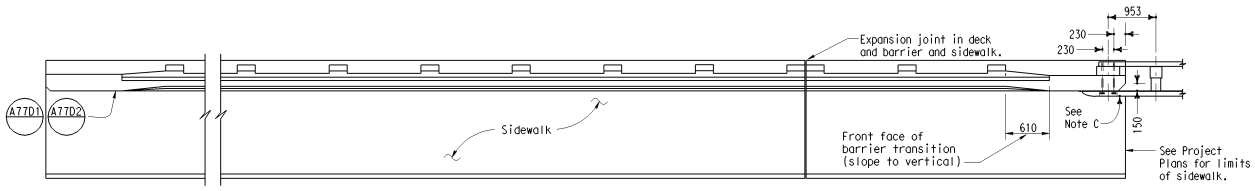

PLAN

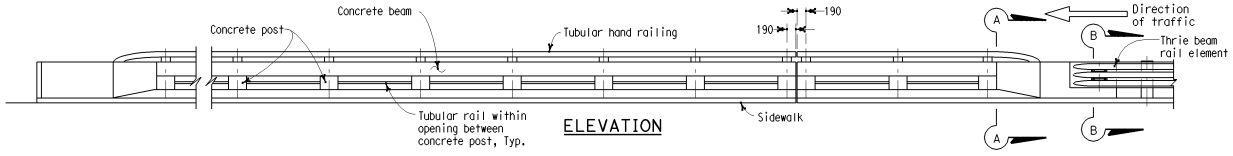

ELEVATION

NOTES

A. No lap splicing allowed on the longitudinal rail reinforcing. Splicing shall be staggered.

B. For electrical details, see Standard Plans ES-9A, ES-9B, ES-9C, ES-9D and ES-9E. See Project Plans for electrical layout.

C. For metal railing connection details not shown, see Standard Plans A77K1 and A77K2.

D. A minimum of two - 130 mm round openings are required for future utilities in addition to those on other plan sheets. Openings are to be sealed at ends and extended 200 mm minimum past end of sidewalk if not used. Duct forms are to be tied down.

E. Chain link railing is not allowed on Type 80SW Barrier.

F. Walls are to be backfilled before railing is placed.

G. Terminate all longitudinal curb, sidewalk, and deck reinforcement in standard 90° hooks.

H. Dimensions will vary with cross slope and with certain thickness of surfacing.

I. Expansion joint to match deck joint, see Standard Plan B11-63 for expansion joint details.

J. This barrier is to be used only for speeds of 70 Km/h (45 MPH) or less. For speeds greater than 70 Km/h (45 MPH), pedestrians should be protected by a separation traffic barrier.

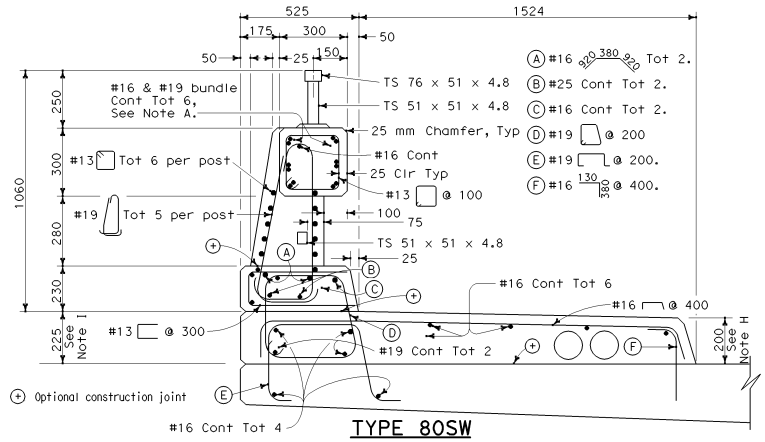

TYPE 80SW

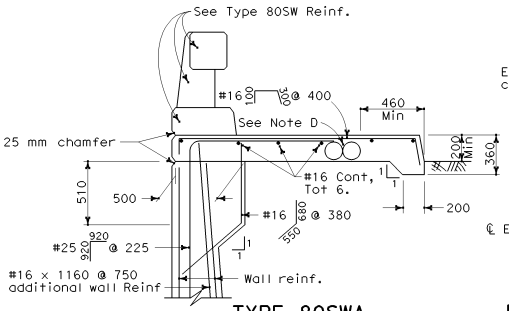

TYPE 80SWA

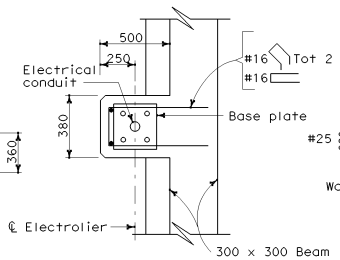

PLAN VIEW

ELECTROLIER PEDESTAL

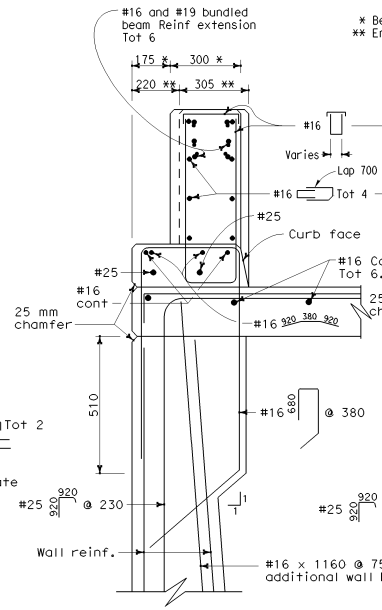

SECTION A-A
(Tubular hand railing not shown)

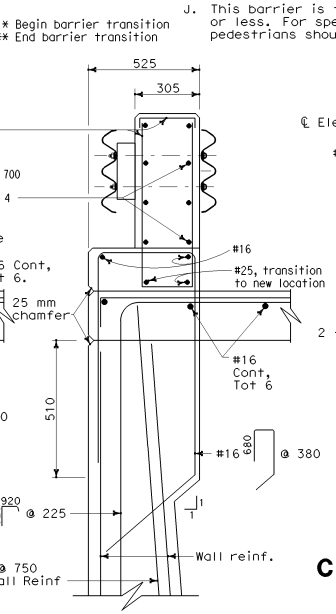

SECTION B-B

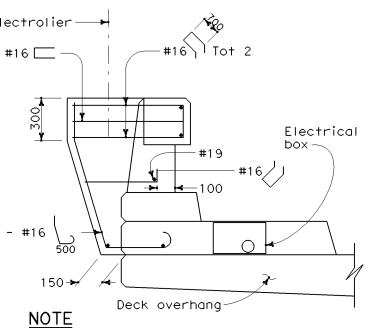

NOTE
Pedestal design for 304 mm base plate.

BARRIER MODIFICATION FOR ELECTROLIER

STATE OF CALIFORNIA
DEPARTMENT OF TRANSPORTATION

CONCRETE BARRIER TYPE 80SW (SHEET 1 OF 3)

NO SCALE

ALL DIMENSIONS ARE IN MILLIMETERS UNLESS OTHERWISE SHOWN

B11-62

07-08-04

Back to Table of Contents

DIST	COUNTY	ROUTE	KILOMETER POST TOTAL PROJECT	SHEET NO.	TOTAL SHEETS

Caltrans Metric

REGISTERED CIVIL ENGINEER

July 1, 2004
PLANS APPROVAL DATE

REGISTERED PROFESSIONAL ENGINEER NAHED ABDIN No. C48719 Exp. 9-30-04 CIVIL STATE OF CALIFORNIA

The State of California or its officers or agents shall not be responsible for the accuracy or completeness of electronic copies of this plan sheet.

To get to the Caltrans web site, go to: http://www.dot.ca.gov

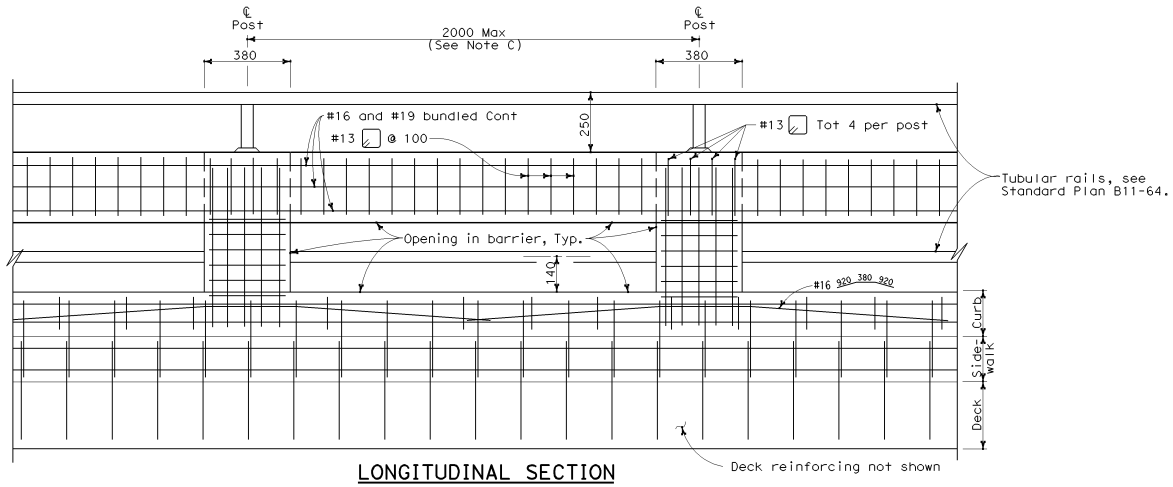

LONGITUDINAL SECTION

NOTES

A. Expansion joint to match deck joint.

B. Continue A,B,C, and #13 longitudinal reinforcing. See Type 80SW typical section and Section S-S on Standard Plan B11-62.

C. Post to be spaced equally, typically 2000 mm spacing. Post spacing may be reduced where location of hinges or expansion joints or the length of wingwalls will not accommodate the 2000 mm spacing. Maximum see-through availability is to be strived for, where 2000 mm post spacing can not be achieved.

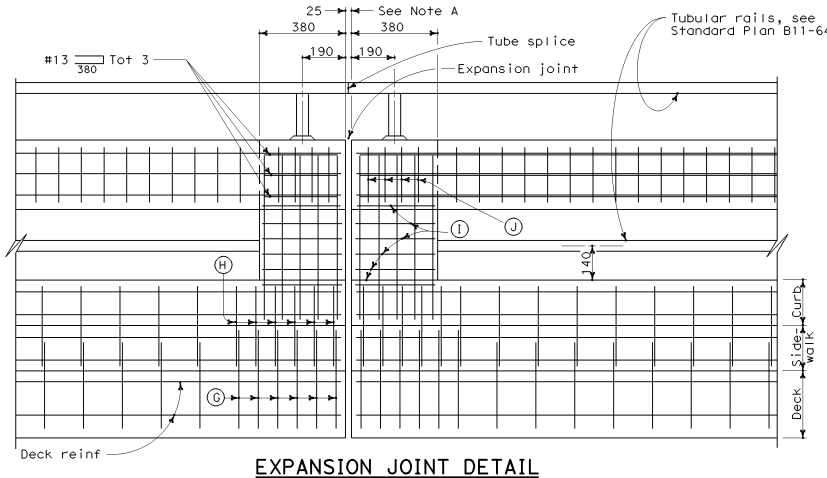

EXPANSION JOINT DETAIL

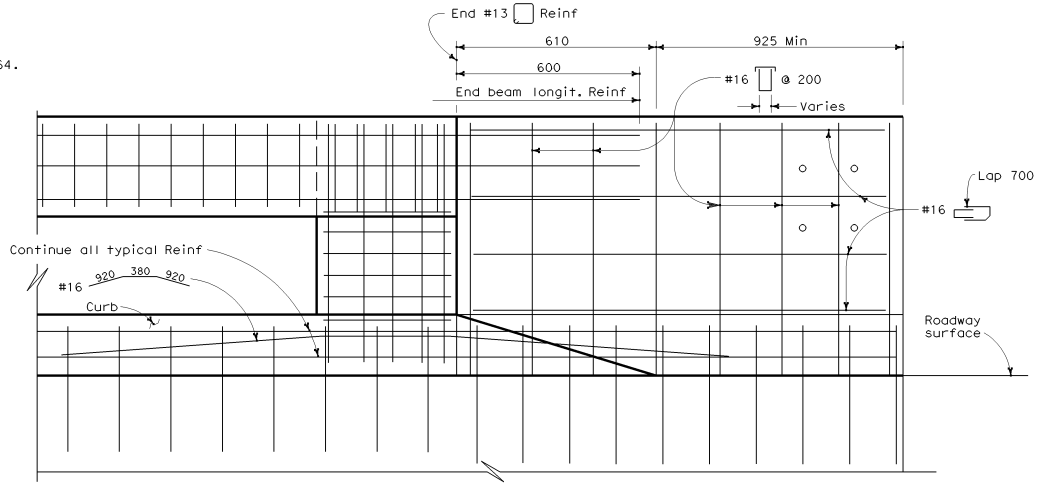

END SECTION

(Hand railing not shown)

G #19 Tot 6 @ 100 mm each side of expansion joint.

H #19 Tot 6 @ 100 mm each side of expansion joint.

I #13 Tot 6 per post.

J #13 Tot 4 per post.

STATE OF CALIFORNIA
DEPARTMENT OF TRANSPORTATION

CONCRETE BARRIER TYPE 80SW (SHEET 2 OF 3)

NO SCALE

ALL DIMENSIONS ARE IN MILLIMETERS UNLESS OTHERWISE SHOWN

B11-63

07-08-04

Back to Table of Contents

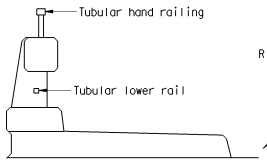

SECTION E-E

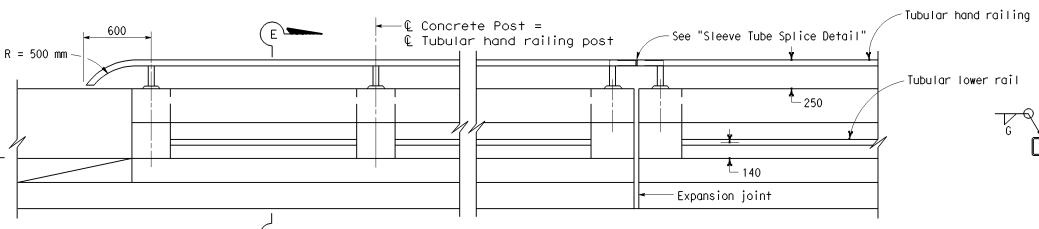

ELEVATION

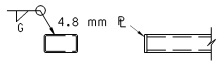

RAIL CAP

Caltrans Metric

DIST	COUNTY	ROUTE	KILOMETER POST TOTAL PROJECT	SHEET NO.	TOTAL SHEETS

REGISTERED CIVIL ENGINEER

July 1, 2004
PLANS APPROVAL DATE

REGISTERED PROFESSIONAL ENGINEER NAHED ABDIN No. C48719 Exp. 9-30-04 CIVIL STATE OF CALIFORNIA

The State of California or its officers or agents shall not be responsible for the accuracy or completeness of electronic copies of this plan sheet.

To get to the Caltrans web site, go to: http://www.dot.ca.gov

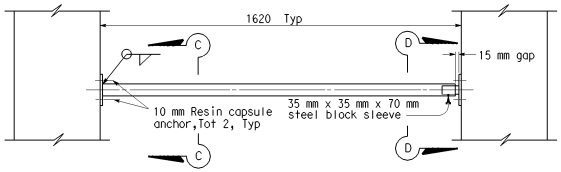

LOWER RAIL DETAIL

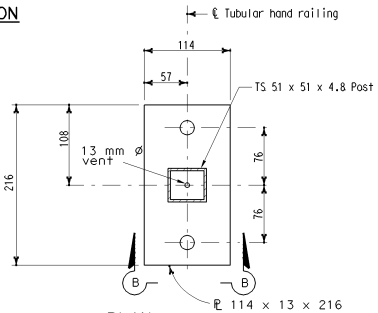

PLAN

This plate detail is restricted to Tubular hand railing (TS 51 x 51 x 4.8 post)

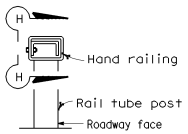

ELEVATION

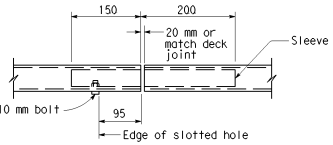

VIEW G-G

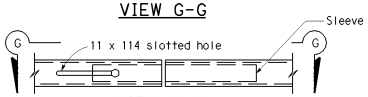

VIEW H-H

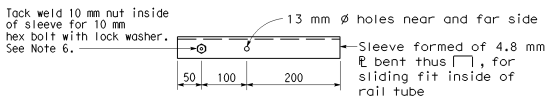

SLEEVE TUBE SPLICE DETAIL

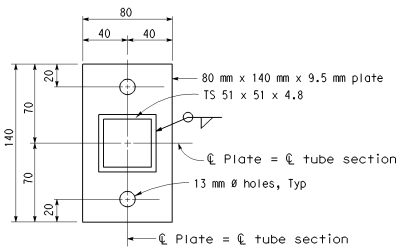

SECTION C-C

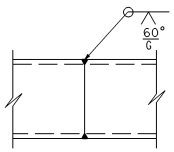

TUBE - WELDED SPLICE

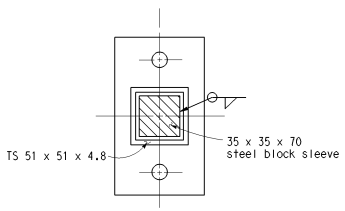

SECTION D-D

See Section C-C for details not shown

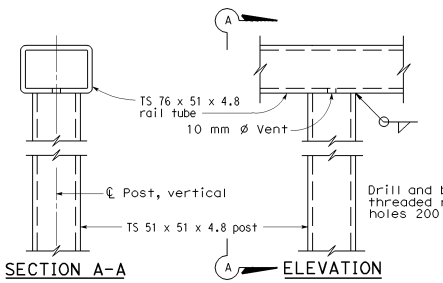

SECTION A-A

ELEVATION

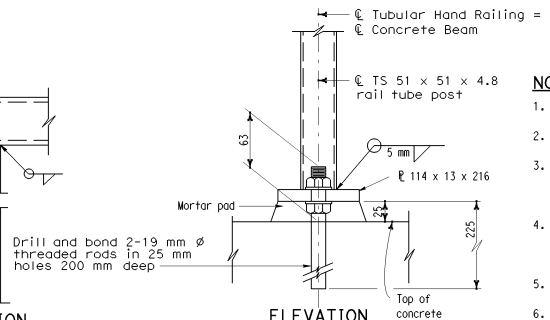

ELEVATION
SECTION B-B

HAND RAILING CONNECTION DETAILS

NOTES

1. Galvanize rail assembly after fabrication.
2. Posts shall be normal to railing.
3. Tube splices shall be located in the tubes spanning deck or wall joints. Increase joint width in tubes to match expansion joint width and increase sleeve length accordingly.
4. Top rail tube shall be continuous over not less than two posts except a short length is permitted near deck or wall joints, electroliers, or other rail discontinuities.
5. See project plans for limits of Tubular Hand railing.
6. 10 mm nut tack welded to sleeve may be replaced by drilled and tapped hole in sleeve.

STATE OF CALIFORNIA
DEPARTMENT OF TRANSPORTATION

CONCRETE BARRIER TYPE 80SW (SHEET 3 OF 3)

NO SCALE

ALL DIMENSIONS ARE IN MILLIMETERS UNLESS OTHERWISE SHOWN

B11-64

07-08-04

2004 Std PLAN B11-64

Back to Table of Contents

DIST	COUNTY	ROUTE	KILOMETER POST TOTAL PROJECT	SHEET NO.	TOTAL SHEETS

Caltrans Metric

REGISTERED CIVIL ENGINEER

July 1, 2004
PLANS APPROVAL DATE

REGISTERED PROFESSIONAL ENGINEER NAHED ABDIN No. C48719 Exp. 9-30-04 CIVIL STATE OF CALIFORNIA

The State of California or its officers or agents shall not be responsible for the accuracy or completeness of electronic copies of this plan sheet.

To get to the Caltrans web site, go to: http://www.dot.ca.gov

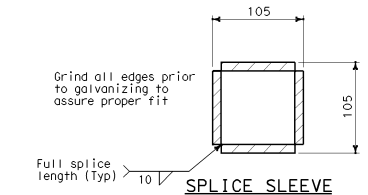

SPLICE SLEEVE

Make from 10 mm plates
Splice to fit freely
inside TS 127 x 127 x 7.9

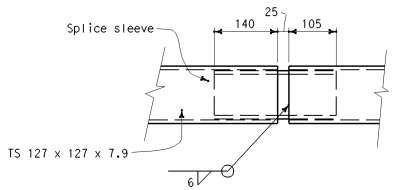

EXPANSION JOINT

See Note 6

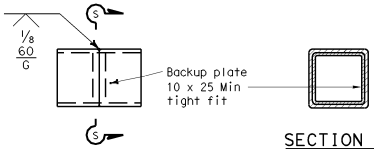

SECTION S-S

ALTERNATE TUBE WELDED SPLICE

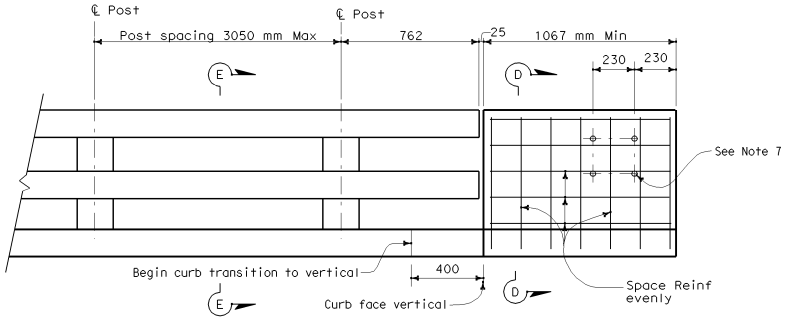

END OF RAILING ELEVATION

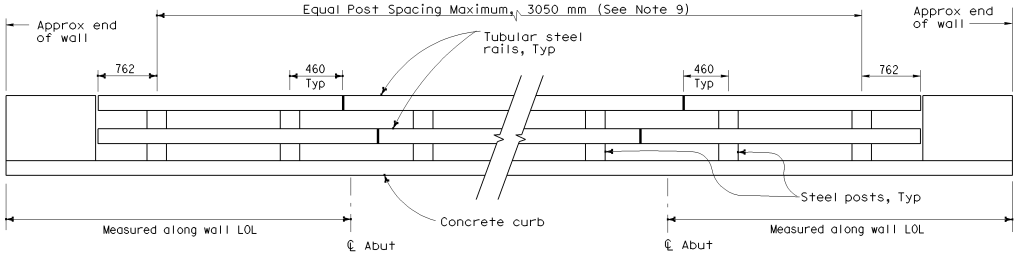

BRIDGE RAILING ELEVATION

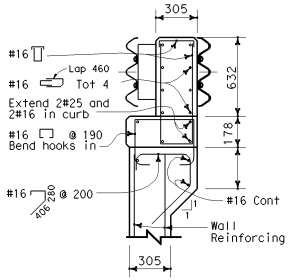

SECTION D-D

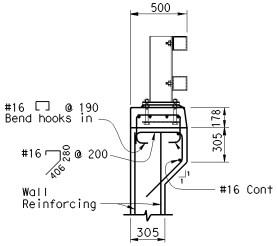

SECTION E-E

On Wingwall

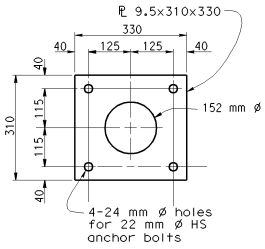

SECTION B-B

POST ANCHOR BOLT PLATE

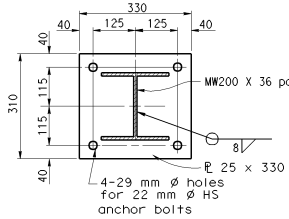

PLAN

POST BASE PLATE PLAN

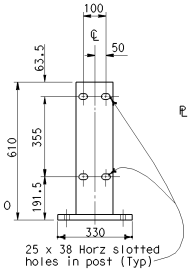

ELEVATION

BRIDGE POST

(Front view)

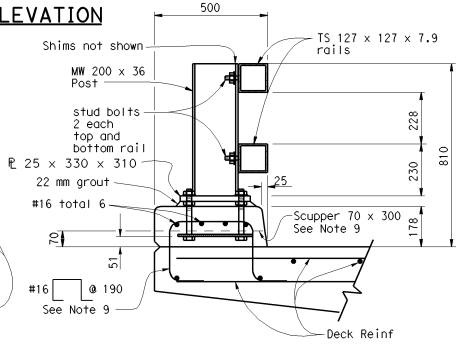

TYPICAL SECTION

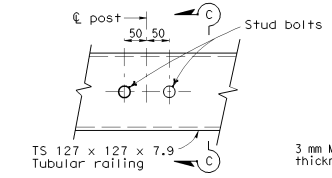

STUD BOLT LOCATION DETAIL

(Backside view of railing)

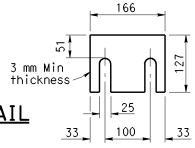

RAILING SHIM DETAIL

SECTION C-C

STUD BOLT

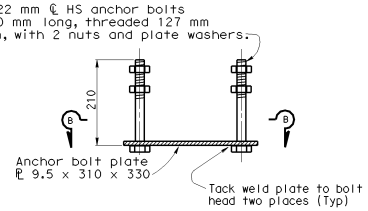

POST ANCHOR BOLT DETAILS

GENERAL NOTES

1. All structural steel shall be galvanized after fabrication.
2. Post shall be normal to railing.
3. Tubing shall be bent or fabricated to fit horizontal curve when radius is less than 273 meters.
4. All exposed corners shall be ground smooth.
5. Tubing shall be continuous over not less than 3 intermediate posts.
6. Expansion joints in rail tubes shall match deck expansion joints.
7. For typical metal railing connection details not shown, see Standard Plans A77J1 and A77J2.
8. If required, place scuppers midway between rail posts near centerline spans. Adjust reinforcing spacing to clear openings.
9. Post spacing and/or end block length to be adjusted to fit bridge length or approach slab.

STATE OF CALIFORNIA
DEPARTMENT OF TRANSPORTATION

CALIFORNIA ST-30 BRIDGE RAIL

NO SCALE

ALL DIMENSIONS ARE IN MILLIMETERS UNLESS OTHERWISE SHOWN

B11-65

07-08-04

Back to Table of Contents

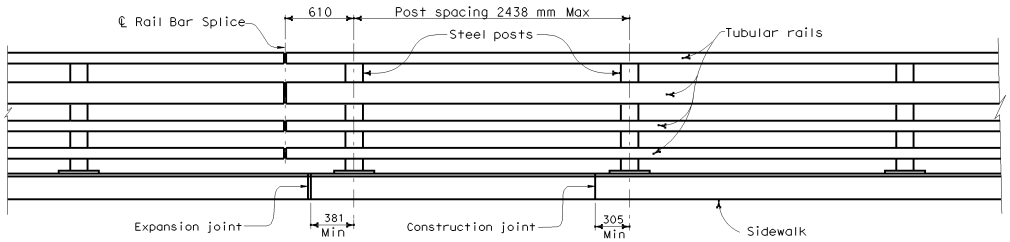

BRIDGE RAILING ELEVATION

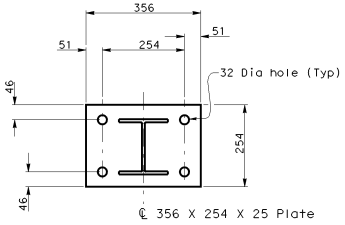

POST BASE PLATE PLAN

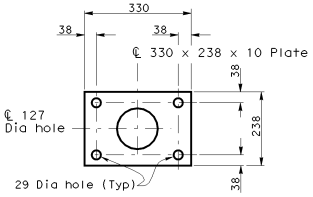

SPACER PLATE PLAN

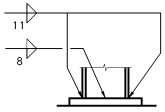

POST BASE WELD DETAIL

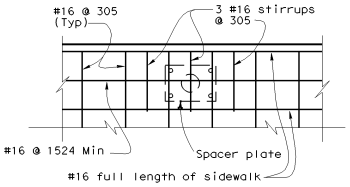

SIDEWALK REINFORCING PLAN

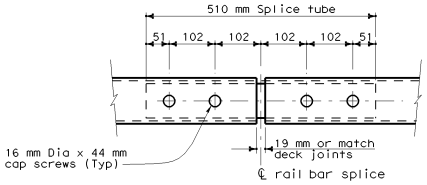

BOTTOM VIEW
RAIL BAR SPLICE DETAIL

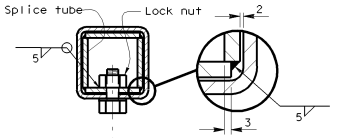

RAIL BAR
SPLICE SECTION

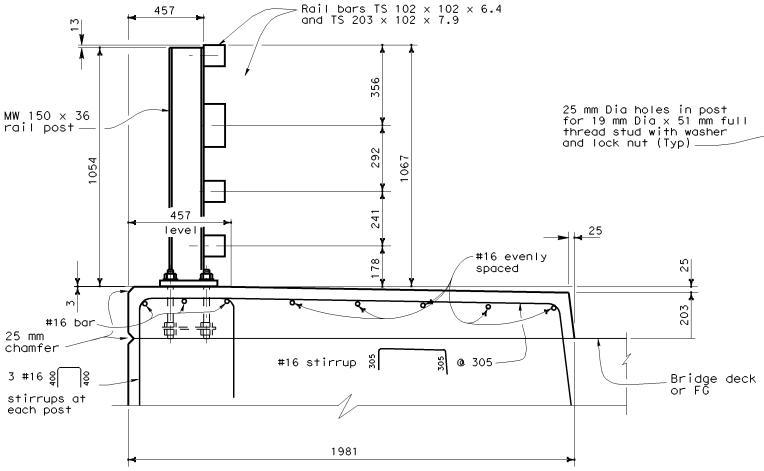

TYPICAL SECTION

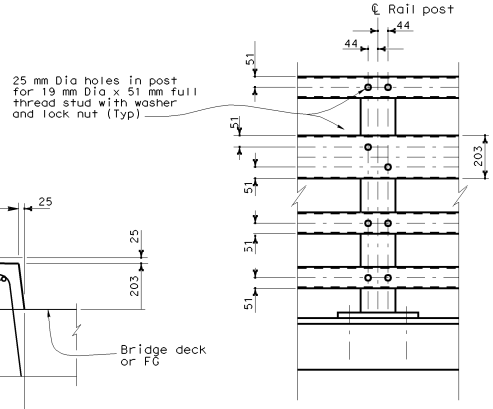

ELEVATION

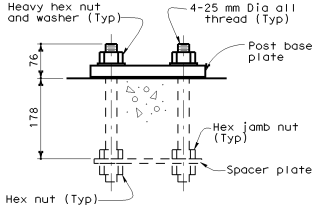

RAIL POST
ANCHORAGE

NOTES

1. All exposed cuts or sheared edges shall be rounded and free of burrs.
2. Rail posts shall be set normal to grade.
3. Lengths of rail bar shall be attached to a minimun of two (2) rail posts
4. All structural steel shall be galvanized after fabrication.
5. Rail post anchoring nuts shall be tightened to a snug fit and given additional 1/8 turn.
6. Holes in posts for rail bar attachment may be field drilled. Holes shall be coated with an approved zinc-rich paint prior to erection.
7. This barrier is to be used only for speeds of 70 Km/h (45 MPH) or less. For speeds greater than 70 Km/h (45 MPH), pedestrians should be protected by a separation traffic barrier.

Caltrans Metric

DIST	COUNTY	ROUTE	KILOMETER POST TOTAL PROJECT	SHEET NO.	TOTAL SHEETS

REGISTERED CIVIL ENGINEER

July 1, 2004
PLANS APPROVAL DATE

REGISTERED PROFESSIONAL ENGINEER NAHED ABDIN No. C48719 Exp. 9-30-04 CIVIL STATE OF CALIFORNIA

The State of California or its officers or agents shall not be responsible for the accuracy or completeness of electronic copies of this plan sheet.

To get to the Caltrans web site, go to: http://www.dot.ca.gov

STATE OF CALIFORNIA
DEPARTMENT OF TRANSPORTATION

CALIFORNIA ST-40 BRIDGE RAIL (SHEET 1 OF 2)

NO SCALE

ALL DIMENSIONS ARE IN MILLIMETERS UNLESS OTHERWISE SHOWN

B11-66

07-08-04

Back to Table of Contents

DIST	COUNTY	ROUTE	KILOMETER POST TOTAL PROJECT	SHEET NO.	TOTAL SHEETS

REGISTERED CIVIL ENGINEER

July 1, 2004
PLANS APPROVAL DATE

REGISTERED PROFESSIONAL ENGINEER NAHED ABDIN No. C48719 Exp. 9-30-04 CIVIL STATE OF CALIFORNIA

The State of California or its officers or agents shall not be responsible for the accuracy or completeness of electronic copies of this plan sheet.

To get to the Caltrans web site, go to: http://www.dot.ca.gov

Caltrans Metric

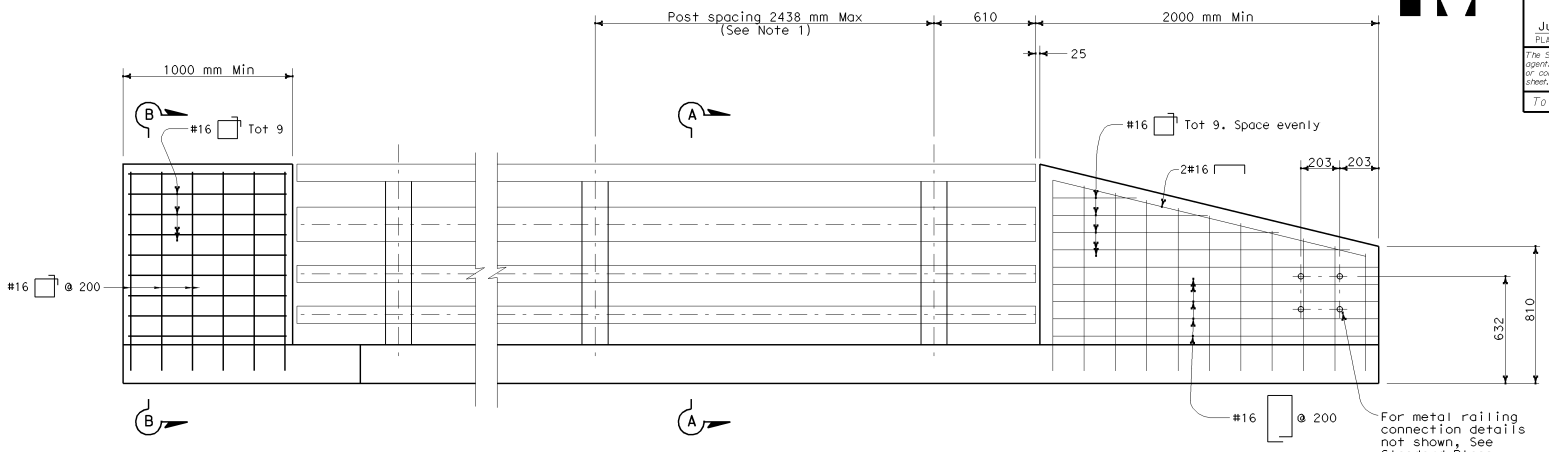

END OF RAILING ELEVATION

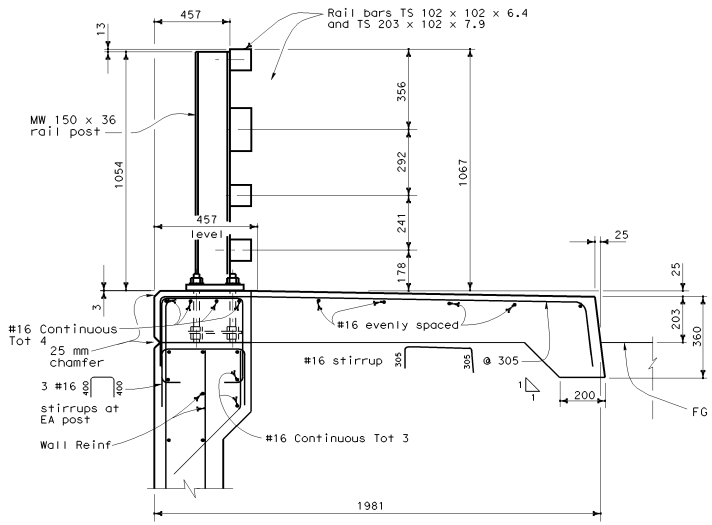

SECTION A-A

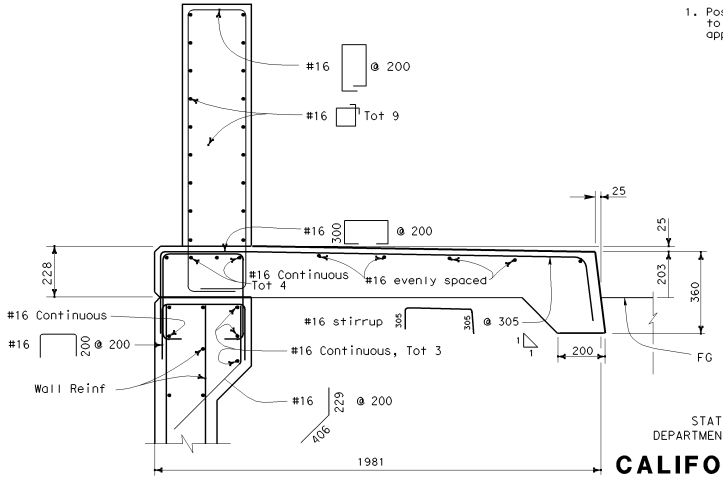

SECTION B-B

NOTE

1. Post spacing and/or end block length to be adjusted to fit bridge length or approach slab.

STATE OF CALIFORNIA
DEPARTMENT OF TRANSPORTATION

CALIFORNIA ST-40 BRIDGE RAIL (SHEET 2 OF 2)

NO SCALE

ALL DIMENSIONS ARE IN MILLIMETERS UNLESS OTHERWISE SHOWN

B11-67

07-08-04

Back to Table of Contents

DIST	COUNTY	ROUTE	KILOMETER POST TOTAL PROJECT	SHEET NO.	TOTAL SHEETS

REGISTERED CIVIL ENGINEER

July 1, 2004
PLANS APPROVAL DATE

REGISTERED PROFESSIONAL ENGINEER NAHED ABDIN No. C48719 Exp. 9-30-04 CIVIL STATE OF CALIFORNIA

The State of California or its officers or agents shall not be responsible for the accuracy or completeness of electronic copies of this plan sheet.

To get to the Caltrans web site, go to: http://www.dot.ca.gov

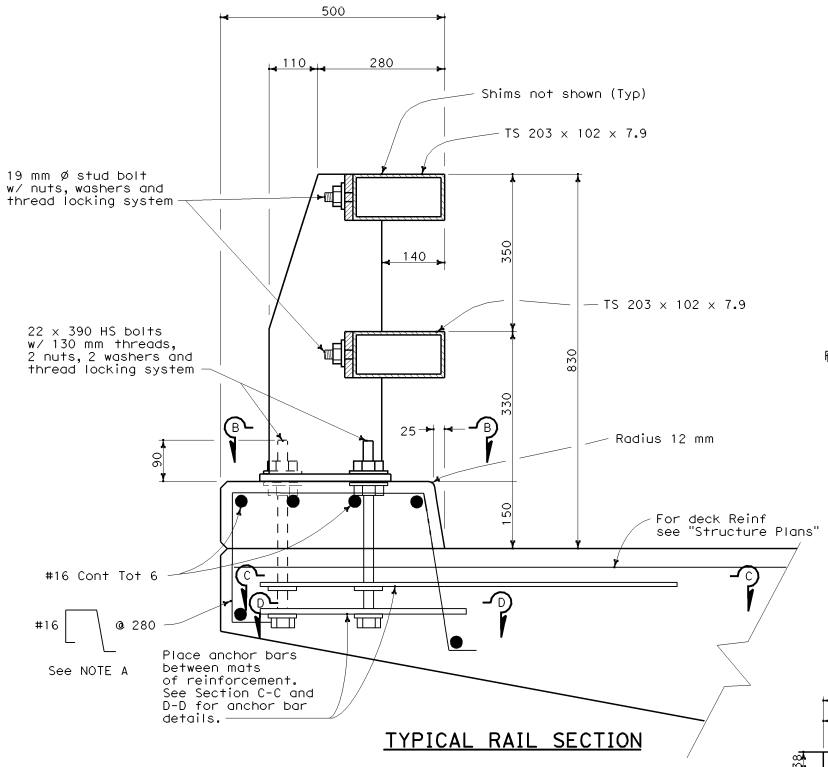

TYPICAL RAIL SECTION

NOTE A

Adjust spacing to clear scupper opening by 50 mm if applicable.

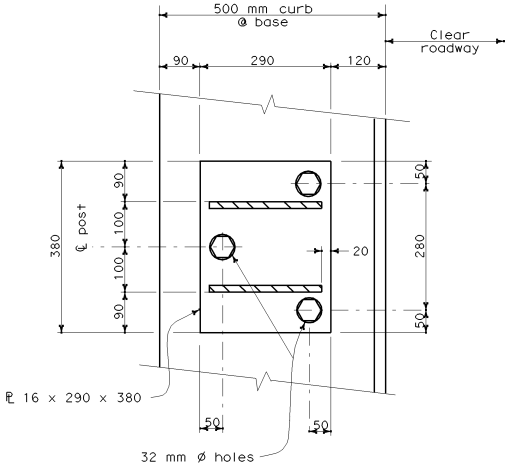

SECTION B-B

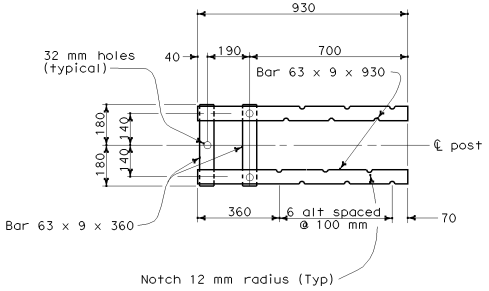

SECTION C-C

Top Anchorage

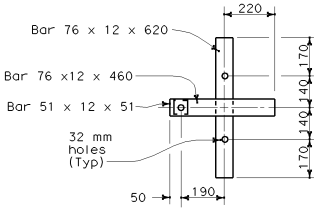

SECTION D-D

Lower Anchorage

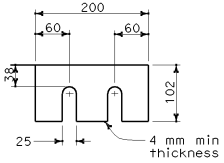

SHIMS REQUIRED FOR TOP AND BOTTOM RAIL

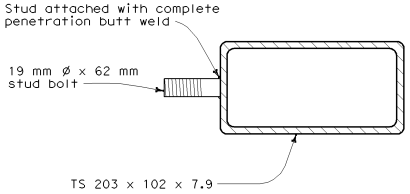

SECTION AT POST

STUD BOLT DETAIL

STATE OF CALIFORNIA
DEPARTMENT OF TRANSPORTATION

CALIFORNIA ST-10 BRIDGE RAIL (SHEET 1 OF 3)

NO SCALE

ALL DIMENSIONS ARE IN MILLIMETERS UNLESS OTHERWISE SHOWN

B11-68

07-08-04

Back to Table of Contents

DIST	COUNTY	ROUTE	KILOMETER POST TOTAL PROJECT	SHEET NO.	TOTAL SHEETS

Caltrans Metric

REGISTERED CIVIL ENGINEER

July 1, 2004
PLANS APPROVAL DATE

REGISTERED PROFESSIONAL ENGINEER NAHED ABDIN No. C48719 Exp. 9-30-04 CIVIL STATE OF CALIFORNIA

The State of California or its officers or agents shall not be responsible for the accuracy or completeness of electronic copies of this plan sheet.

To get to the Caltrans web site, go to: http://www.dot.ca.gov

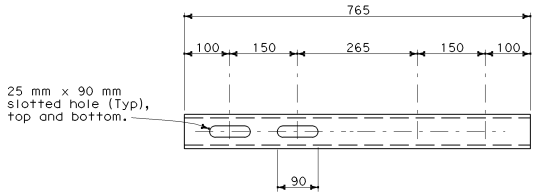

EXPANSION SLEEVE DETAIL

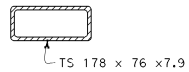

SECTION SLEEVE

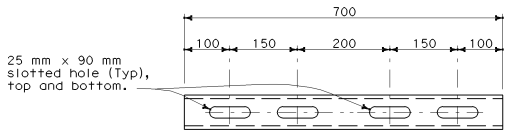

STANDARD SLEEVE DETAIL

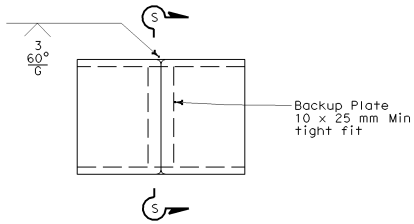

ALTERNATE TUBE WELDED SPLICE

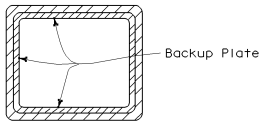

SECTION S-S

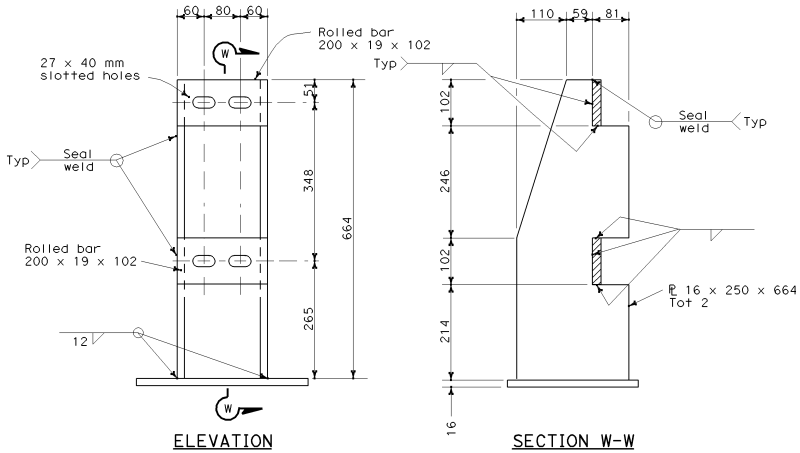

ELEVATION

SECTION W-W

POST DETAIL

GENERAL NOTES

1) All structural steel shall be galvanized after fabrication.

2) Anchor bolts may be tack welded (shop or field) to anchorage.

3) All rough edges on posts and rails shall be ground smooth.

4) Tubing shall be bent or fabricated to fit horizontal curve when radius is less than 273 meters.

5) After installation of rail, the exposed rail bolt threads shall be painted with two coats of zinc rich paint conforming to the requirement of section 75-1.05 galvanizing of The Standard Specifications.

6) The alternative welded splice may be used in lieu of The Standard Splice.

7) Each rail length shall be continuous over a minimum of two posts.

8) The contractor shall check that the tubular sleeves splices conform to the dimensions indicated to assure proper clearance.

9) Except for expansion splices, not more than one splice shall be permitted per same side of post.

10) See project plans for approach guardrail details.

STATE OF CALIFORNIA
DEPARTMENT OF TRANSPORTATION

CALIFORNIA ST-10 BRIDGE RAIL (SHEET 2 OF 3)

NO SCALE

ALL DIMENSIONS ARE IN MILLIMETERS UNLESS OTHERWISE SHOWN

B11-69

07-08-04

Back to Table of Contents

DIST	COUNTY	ROUTE	KILOMETER POST TOTAL PROJECT	SHEET NO.	TOTAL SHEETS

REGISTERED CIVIL ENGINEER

July 1, 2004
PLANS APPROVAL DATE

REGISTERED PROFESSIONAL ENGINEER NAHED ABDIN No. C48719 Exp. 9-30-04 CIVIL STATE OF CALIFORNIA

The State of California or its officers or agents shall not be responsible for the accuracy or completeness of electronic copies of this plan sheet.

To get to the Caltrans web site, go to: http://www.dot.ca.gov

Caltrans Metric

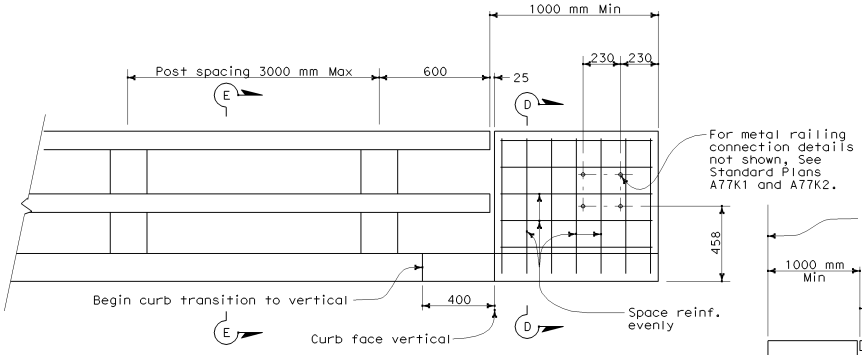

END OF RAILING ELEVATION

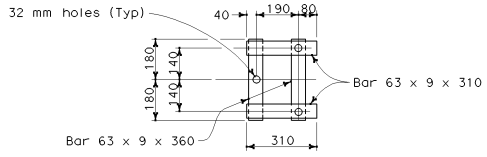

WALL ANCHOR PLATE DETAIL

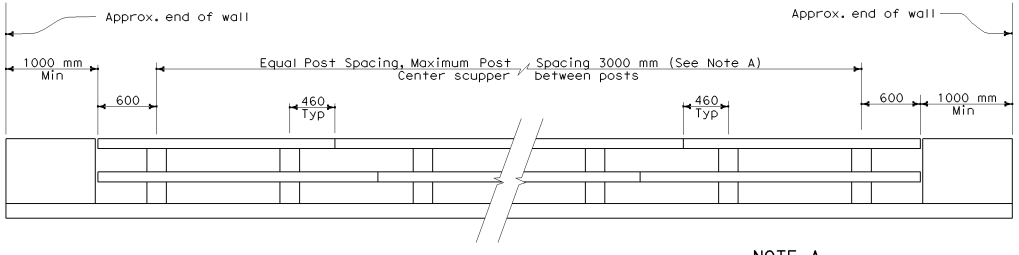

BRIDGE RAILING ELEVATION

NOTE A

Post spacing and/or block length to be adjusted to fit bridge length or approach slab.

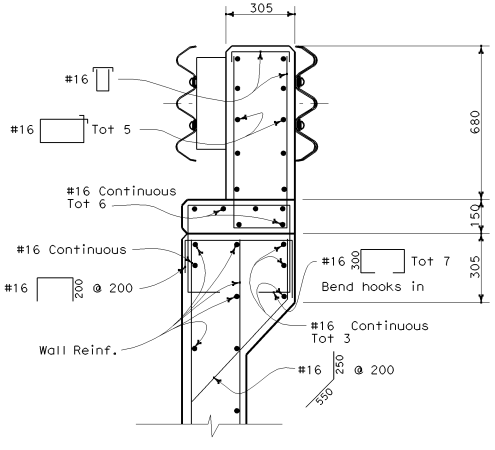

SECTION D-D

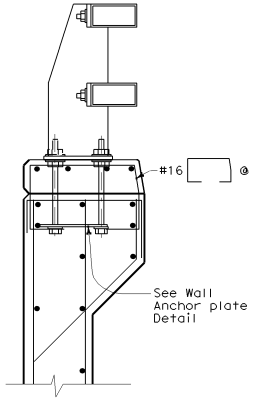

SECTION E-E

Reinf. same as for Section D-D except as noted.

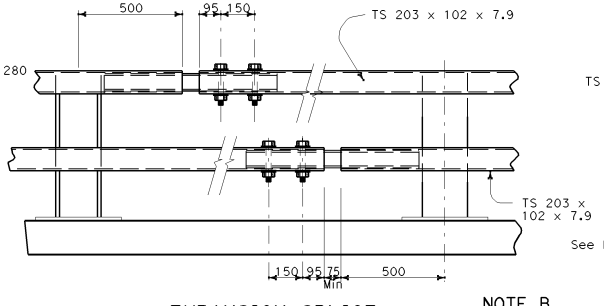

EXPANSION SPLICE

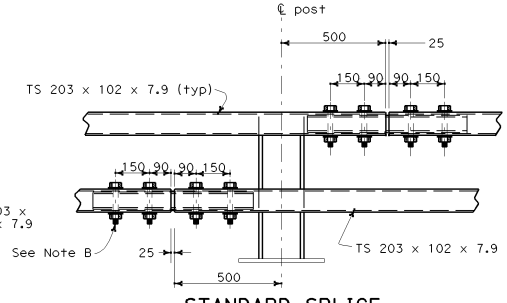

STANDARD SPLICE

NOTE B

Use 19 mm Ø x 152 mm (top rail) and 19 mm Ø x 152 mm (bottom rail) HS bolts w/ washes, fully tensioned. 25 mm holes in rail (Typ).

STATE OF CALIFORNIA
DEPARTMENT OF TRANSPORTATION

CALIFORNIA ST-10 BRIDGE RAIL (SHEET 3 OF 3)

NO SCALE

ALL DIMENSIONS ARE IN MILLIMETERS UNLESS OTHERWISE SHOWN

B11-70

07-08-04

Back to Table of Contents

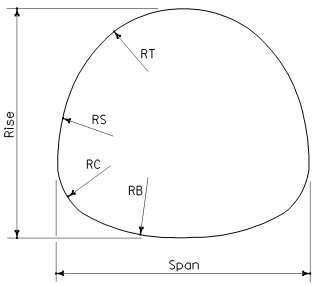

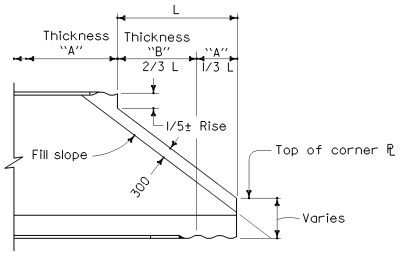

SIDE ELEVATION

NOTE

Thickness "B" two thicknesses greater than thickness "A", except for 6.5 mm and 7 mm thicknesses.

Skew-bevels not permitted with Alternative 1.
Cutoff dimensions are approximate only and may be varied by fabricator to suit plate layout.

ALTERNATIVE 1

20 mm ø Hook bolts @ 600 mm ± centers. Length as provided by manufacturer.

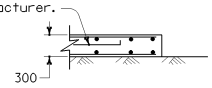

SECTION A-A

NOTE

Reinforce both faces of concrete collar with #13 @ 450 mm both ways. Maximum skew is 35°.

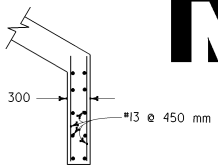

DETAIL B

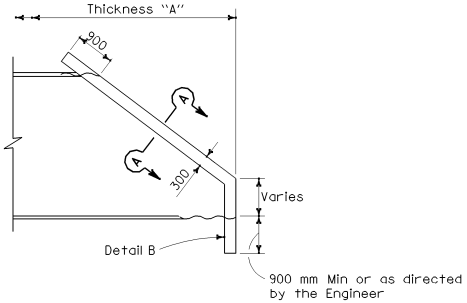

SIDE ELEVATION

ALTERNATIVE 2

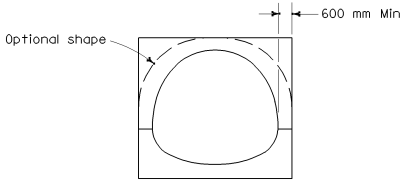

END ELEVATION

END BEVELS

MAXIMUM HEIGHT OF FILL (m)											LAYOUT DATA (mm)			
Span (mm)	Rise (mm)	Thickness (mm)												
		2.5	3.5	4.5	2.5	3.5	4.5	5.5	6.5	7.0				
		Soil Pressure 144 KPa			For soil pressures see Table A						RT	RS	RC	RB
3708	3353	4.9	4.9	4.9	5.2	7.9	10.0	14.0	16.5	18.0	1727	2362	965	3404
3937	3429	4.6	4.6	4.6	4.9	7.3	9.4	13.1	15.5	17.1	1854	2413	965	3658
4013	3632	4.3	4.3	4.3	4.9	7.3	9.4	12.8	15.2	16.8	1854	2616	965	4039
4216	3734	4.0	4.0	4.0	4.6	6.7	8.8	12.5	14.6	15.8	1956	2743	965	4166
4293	3912	4.0	4.0	4.0	4.6	6.7	8.8	12.2	14.3	15.5	1956	2921	965	4623
4420	4115	4.0	4.0	4.0	4.3	6.4	8.5	11.9	14.0	15.2	1981	3327	965	4420
4521	4267	4.0	4.0	4.0	4.3	6.4	8.2	11.6	13.7	14.9	2007	3454	965	4877
4724	4369	3.7	3.7	3.7	4.0	6.1	7.9	11.0	13.1	14.3	2134	3505	965	5105
4801	4597		3.7	3.7		6.1	7.9	10.7	12.8	14.0	2108	3810	965	5385
4978	4699		3.7	3.7		5.8	7.6	10.4	12.2	13.4	2184	3988	965	5461
5004	4902		3.4	3.4		5.8	7.6	10.4	12.2	13.4	2235	4013	965	6883
5105	4953		3.4	3.4		5.8	7.3	10.0	11.9	13.1	2261	4242	965	6274
5258	5182		4.3	4.3		5.5	7.0	9.8	11.6	12.8	2286	4420	1194	5461
5588	5156			4.0			6.7	9.1	11.0	11.9	2515	3988	1194	6325
5842	5232			4.0			6.4	8.8	10.7	11.6	2667	3962	1194	6706
5944	5359			3.7			6.4	8.8	10.4	11.3	2718	4013	1194	7544
6198	5436							8.5	10.0	11.0	2870	3962	1194	7976

Structures require strutting for fill heights below heavy lines. See Note A.

TABLE A						
Spans (mm)	Soil Pressure kPa					
	Thickness (mm)					
	2.5	3.5	4.5	5.5	6.5	7.0
3708 to 5105	163	239	316	431	508	555
5258 to 6198	134	192	239	345	402	440

NOTES

A. For strutting requirements of structural steel plate vehicular undercrossing during construction, see Standard Plan D88A.

B. Minimum cover from crown to shoulder hinge point = 1.5 m.

C. Backfill shall be brought up uniformly on both sides of the structure.

D. Minimum cover for construction loading, see Standard Plan D88.

Reinforced concrete: F_S = 165 MPa
N = 10
F_C = 9 MPa

STATE OF CALIFORNIA
DEPARTMENT OF TRANSPORTATION

STRUCTURAL STEEL PLATE VEHICULAR UNDERCROSSING

NO SCALE

ALL DIMENSIONS ARE IN MILLIMETERS UNLESS OTHERWISE SHOWN

B14-1

Caltrans Metric

DIST	COUNTY	ROUTE	KILOMETER POST TOTAL PROJECT	SHEET NO.	TOTAL SHEETS

REGISTERED CIVIL ENGINEER

July 1, 2004
PLANS APPROVAL DATE

REGISTERED PROFESSIONAL ENGINEER Dallas Forester No. C37765 Exp. 12-31-04 CIVIL STATE OF CALIFORNIA

The State of California or its officers or agents shall not be responsible for the accuracy or completeness of electronic copies of this plan sheet.

To get to the Caltrans web site, go to: http://www.dot.ca.gov

04-01-04

Back to Table of Contents

DIST	COUNTY	ROUTE	KILOMETER POST TOTAL PROJECT	SHEET NO.	TOTAL SHEETS

Caltrans Metric

REGISTERED ELECTRICAL ENGINEER

July 1, 2004
PLANS APPROVAL DATE

REGISTERED PROFESSIONAL ENGINEER J.S. Sandhu NO. E11803 EXP. 9-30-04 ELECTRICAL STATE OF CALIFORNIA

The State of California or its officers or agents shall not be responsible for the accuracy or completeness of electronic copies of this plan sheet.

To get to the Caltrans web site, go to: http://www.dot.ca.gov

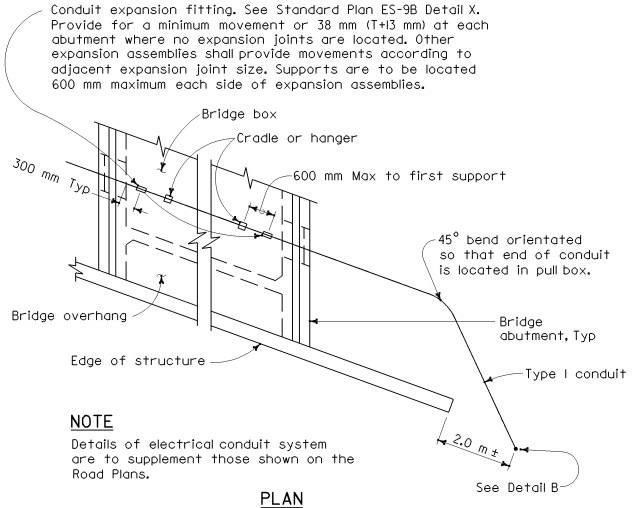

NOTE

Details of electrical conduit system are to supplement those shown on the Road Plans.

PLAN

COMMUNICATION OR SPRINKLER CONTROL CONDUITS

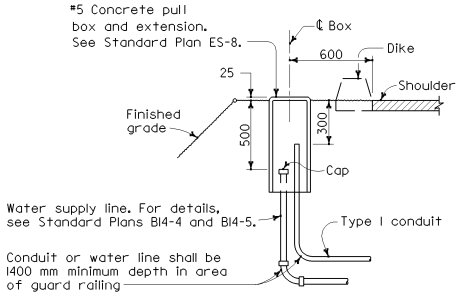

DETAIL B

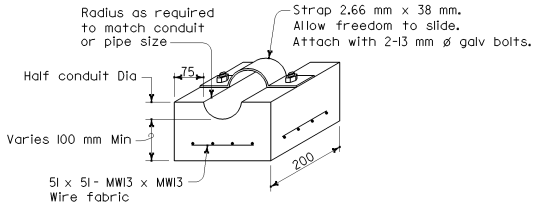

NOTES

1. Cradles to be precast concrete.
2. Secure all cradles to bottom slab of bridge with epoxy adhesive, except as provided below.

CONCRETE CRADLE

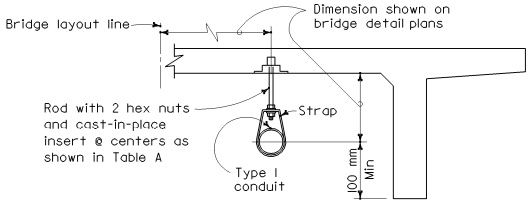

OTHER THAN BOX GIRDER

CONDUIT HANGER SUPPORT DETAILS

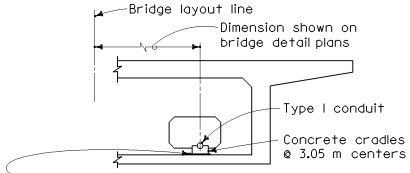

Under the first cradle support inside bridge near abutment or hinge, epoxy 12 gage galvanize steel sheet (800 mm x 400 mm) to the floor of cell. Do not secure cradle to steel sheet. Cradle shall be free to slide to accommodate lateral movement.

BOX GIRDER

CONDUIT SUPPORT DETAILS

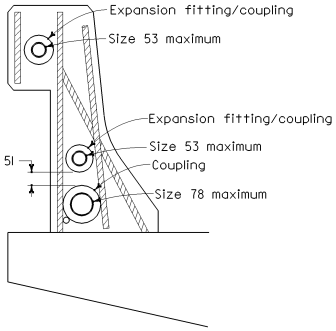

CONDUIT IN BRIDGE RAILING

NOTES

1. The maximum conduit sizes shown are for a straight run across the bridge without pull boxes.
2. In a bridge railing with lighting standards or pull boxes, reduce size of affected conduits as needed.

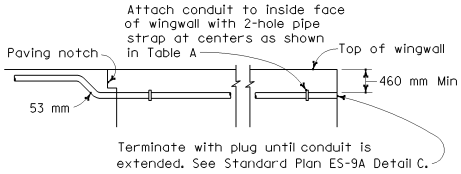

CONDUIT IN OVERHANG-WINGWALL DETAIL

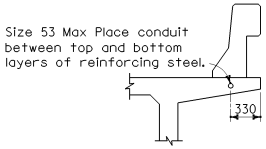

CONDUIT IN OVERHANG

CONDUIT LOCATIONS

(For 53 mm conduit only except as noted)
For location see Bridge Detail plans.

TABLE A

Conduit	Size 63 or less	Size 78	Size 91
Rod	10 mm ø	13 mm ø	16 mm ø
Strap	2.28 mm x 25.4 mm	2.28 mm x 25.4 mm	2.66 mm x 38 mm
Support spacing	3.05 m	3.05 m	3.05 m

STATE OF CALIFORNIA
DEPARTMENT OF TRANSPORTATION

COMMUNICATION AND SPRINKLER CONTROL CONDUITS (CONDUIT LESS THAN SIZE 103)

NO SCALE

ALL DIMENSIONS ARE IN MILLIMETERS UNLESS OTHERWISE SHOWN

B14-3

03-23-04

Back to Table of Contents

DIST	COUNTY	ROUTE	KILOMETER POST TOTAL PROJECT	SHEET NO.	TOTAL SHEETS

Caltrans Metric

REGISTERED MECHANICAL ENGINEER

July 1, 2004
PLANS APPROVAL DATE

REGISTERED PROFESSIONAL ENGINEER
Hao T. Phan
No. M20269
Exp. 9-30-04
MECHANICAL
STATE OF CALIFORNIA

The State of California or its officers or agents shall not be responsible for the accuracy or completeness of electronic copies of this plan sheet.

To get to the Caltrans web site, go to: http://www.dot.ca.gov

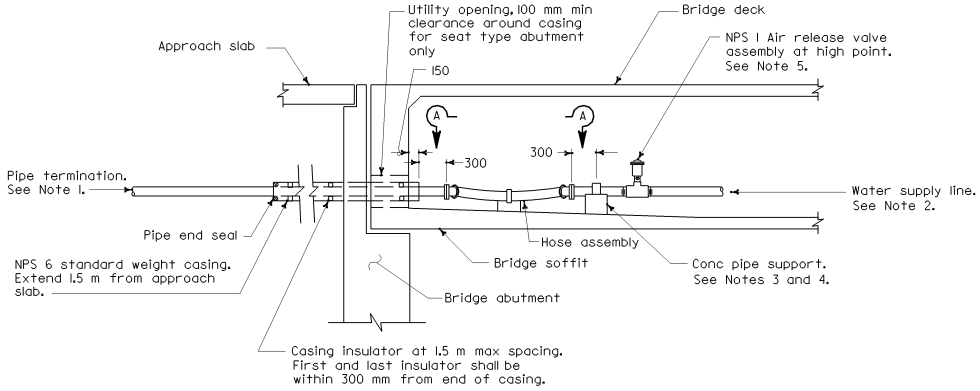

BOX GIRDER INSTALLATION

NUMBERED ITEM

1. 45 degree flanged elbow with insulated flange connection
2. Flanged hose fitting
3. Hose 2.0 m in length (size shall be same as pipe)

NOTES

1. Extend pipe 1.5 m+ beyond the edge of shoulder or as shown on bridge plans. Terminate in a pull box as shown on Standard Plan B14-3, Detail B.
2. Water supply line shall be installed parallel to to bridge soffit or deck.
3. For concrete pipe support, pipe shall be tightly clamped at the pipe support located halfway between hose assemblies. At all other supports, pipe clamp shall be shimmed with steel washer plate to provide 5 mm clearance between pipe and clamp.
4. Maximum spacing between pipe hangers or supports shall be 3.0 m unless otherwise detailed on the plans.
5. Install air release valve using threaded tee or pipe saddle.
6. Openings through diaphrams and bent caps shall be 150 mm diameter unless otherwise detailed on the plans.
7. For details of pipe hanger and concrete pipe support see Standard Plan B14-5.

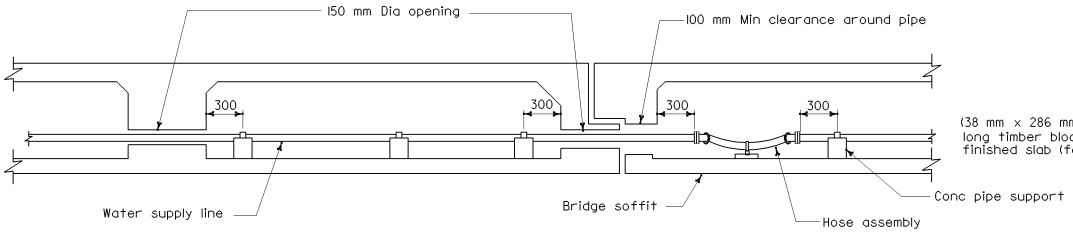

PIPE INSTALLATION AT HINGE

Same for hanger type installation

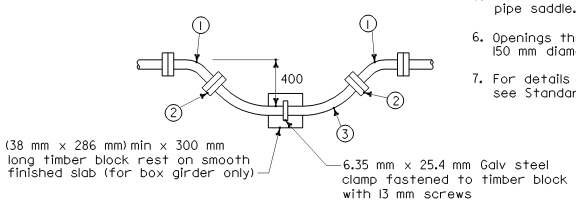

VIEW A-A

HOSE ASSEMBLY

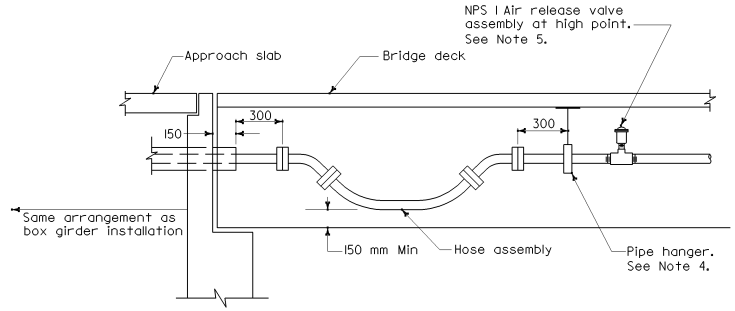

INSTALLATION FOR OTHER STRUCTURE TYPES

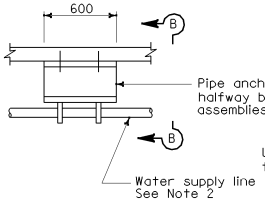

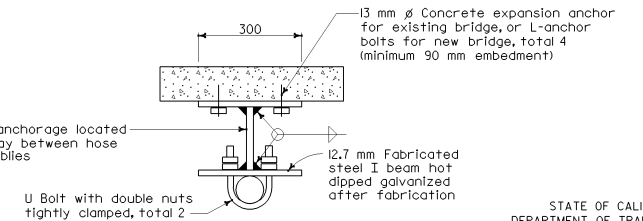

VIEW B-B

STATE OF CALIFORNIA
DEPARTMENT OF TRANSPORTATION

WATER SUPPLY LINE (BRIDGE) (PIPE SIZES LESS THAN NPS 4)

NO SCALE

ALL DIMENSIONS ARE IN MILLIMETERS UNLESS OTHERWISE SHOWN

B14-4

03-24-04

Back to Table of Contents

DIST	COUNTY	ROUTE	KILOMETER POST TOTAL PROJECT	SHEET NO.	TOTAL SHEETS

Caltrans Metric

REGISTERED MECHANICAL ENGINEER

July 1, 2004
PLANS APPROVAL DATE

REGISTERED PROFESSIONAL ENGINEER
Hao T. Phan
No. M20269
Exp. 9-30-04
MECHANICAL
STATE OF CALIFORNIA

The State of California or its officers or agents shall not be responsible for the accuracy or completeness of electronic copies of this plan sheet.

To get to the Caltrans web site, go to: http://www.dot.ca.gov

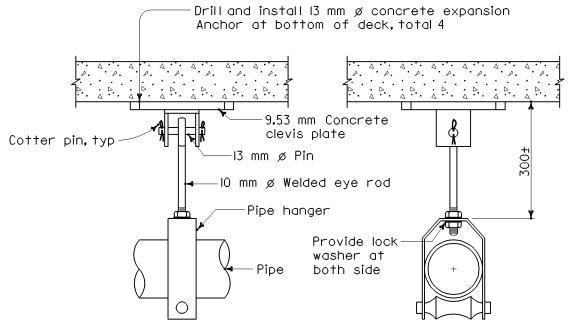

FRONT VIEW SIDE VIEW

FOR EXISTING BRIDGE

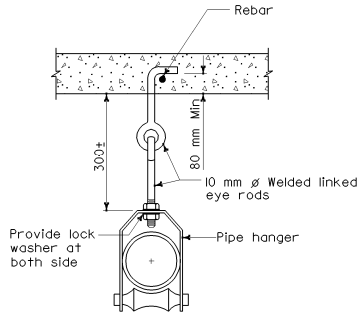

FOR NEW BRIDGE

PIPE HANGER

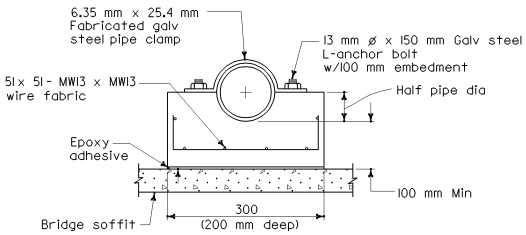

CONCRETE PIPE SUPPORT

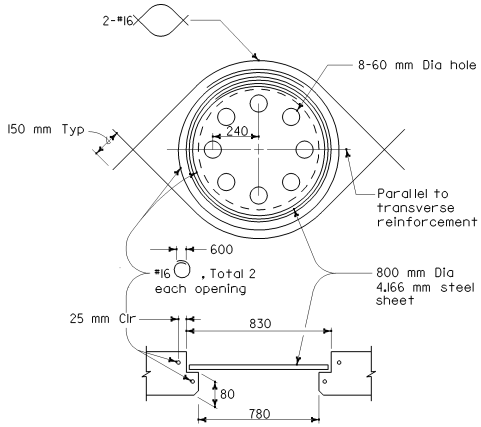

Locate where called for on bridge plans. Adjust reinforcement to clear opening. Plate must be installed before top deck is placed.

SOFFIT ACCESS OPENING

STATE OF CALIFORNIA
DEPARTMENT OF TRANSPORTATION

WATER SUPPLY LINE (DETAILS) (PIPE SIZES LESS THAN NPS 4)

NO SCALE

ALL DIMENSIONS ARE IN MILLIMETERS UNLESS OTHERWISE SHOWN

B14-5

03-24-04

Back to Table of Contents

DIST	COUNTY	ROUTE	KILOMETER POST TOTAL PROJECT	SHEET NO.	TOTAL SHEETS

Caltrans Metric

REGISTERED CIVIL ENGINEER

July 1, 2004
PLANS APPROVAL DATE

REGISTERED PROFESSIONAL ENGINEER Douglas J. Dunnuck No. C47240 Exp. 12-31-05 CIVIL STATE OF CALIFORNIA

The State of California or its officers or agents shall not be responsible for the accuracy or completeness of electronic copies of this plan sheet.

To get to the Caltrans web site, go to: http://www.dot.ca.gov

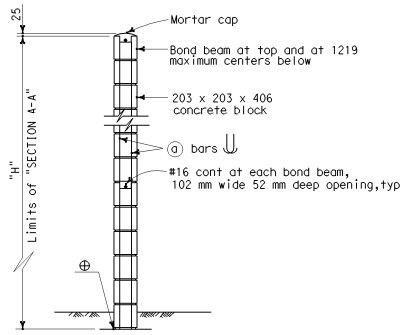

H=1829 THRU H=3048

For details not shown, see H=3658 thru H=4877

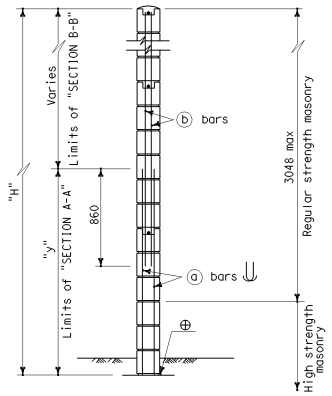

H=3658 THRU H=4877

For details not shown, see H=1829 thru H=3048

TYPICAL SECTION

⊕ Full mortar bed at bottom of wall

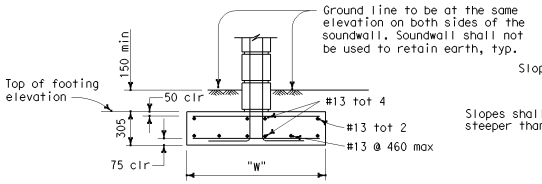

CASE 1

For details not shown, see Case 2. Level ground (±10%) on both sides of the soundwall.

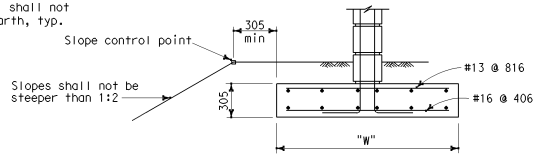

CASE 2

For details not shown, see Case 1. Level ground (±10%) on the traffic side of the soundwall and sloping ground on the opposite side.

SPREAD FOOTING SECTION

TRENCH FOOTING

Maximum H	CASE 1			CASE 2		Maximum H
	Ø = 25 min	Ø = 30 min	Ø = 35 min	Ø = 30 min	Ø = 35 min	
	D	D	D	D	D	
1829	1300	1100	900	1800	1400	1829
2438	1500	1300	1100	2200	1700	2438
3048	1800	1500	1200	2500	1900	3048
3658	2000	1700	1400	2700	2100	3658
4267	2200	1800	1500	3000	2400	4267
4877	2400	2000	1700	3200	2500	4877

Case 1 - Level ground (±10%) on both sides of the soundwall.

Case 2 - Level ground (±10%) on traffic side of the soundwall and sloping ground on opposite side.

SOUNDWALL REINFORCEMENT TABLE

Maximum H	ⓐ bars @ 406 max	ⓑ bars @ 406 max	"y"	f'm (MPa)	Compressive Strength of CMU (MPa)	Maximum H
1829	#13	———	———	10.34	13.1	1829
2438	#13	———	———	10.34	13.1	2438
3048	#13	———	———	10.34	13.1	3048
3658	#16	#13	1829	13.79	19.31	3658
4267	#19	#13	2438	17.24	25.86	4267
4877	#19	#13	3048	17.24	25.86	4877

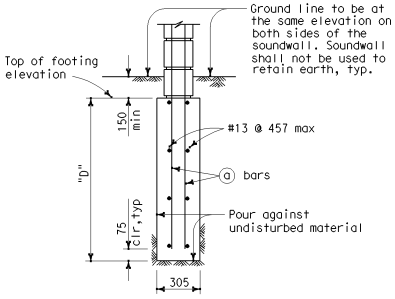

CASE 1

For details not shown, see Case 2. Level ground (±10%) on both sides of the soundwall.

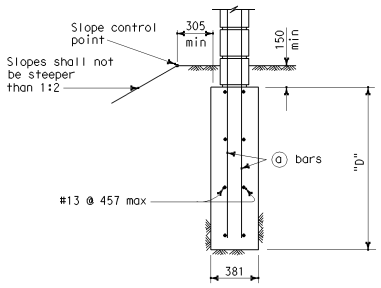

CASE 2

For details not shown, see Case 1. Level ground (±10%) on one side of the soundwall and sloping ground on the opposite side.

TRENCH FOOTING SECTION

SPREAD FOOTING

Maximum H	W
1829	1000
2438	1300
3048	1500
3658	1800
4267	2000
4877	2300

GENERAL NOTES

A. For type of block and joint finish, see other sheets.

B. When blocks are laid in stacked bond, ladder type, galvanized joint reinforcement shall be provided. A minimum of 2-3.76 mm wires continuous at 1219 mm maximum to be used. Locate reinforcement in joints that are at the approximate midpoint between bond and beams.

C. Horizontal joints shall be tooled concave or may be weathered. Vertical joints shall be tooled concave or may be raked.

D. For intermediate wall heights that are between the "H's" given, use the tabular information for the next higher "H".

E. Masonry strengths are listed in the "SOUNDWALL REINFORCEMENT TABLE".

STATE OF CALIFORNIA
DEPARTMENT OF TRANSPORTATION

SOUNDWALL MASONRY BLOCK ON FOOTING DETAILS (1)

NO SCALE

ALL DIMENSIONS ARE IN MILLIMETERS UNLESS OTHERWISE SHOWN

B15-1

06-18-04

Back to Table of Contents

DIST	COUNTY	ROUTE	KILOMETER POST TOTAL PROJECT	SHEET NO.	TOTAL SHEETS

Caltrans Metric

REGISTERED CIVIL ENGINEER

July 1, 2004
PLANS APPROVAL DATE

REGISTERED PROFESSIONAL ENGINEER Douglas J. Dunrud No. C47240 Exp. 12-31-05 CIVIL STATE OF CALIFORNIA

The State of California or its officers or agents shall not be responsible for the accuracy or completeness of electronic copies of this plan sheet.

To get to the Caltrans web site, go to: http://www.dot.ca.gov

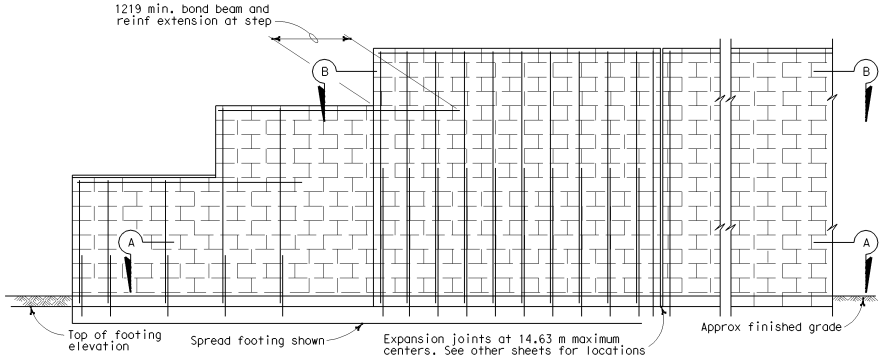

ELEVATION

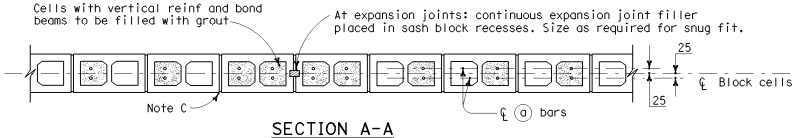

SECTION A-A

For details not shown, see other sections.

H=1829 THRU H=3048

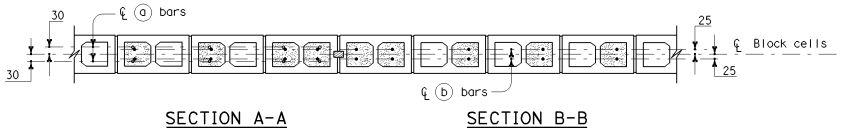

SECTION A-A SECTION B-B

For details not shown, see other sections.

H=3658 THRU H=4877

Note 1: For details not shown, see "SOUNDWALL-MASONRY BLOCK ON FOOTING" - DETAILS" (1) sheet.

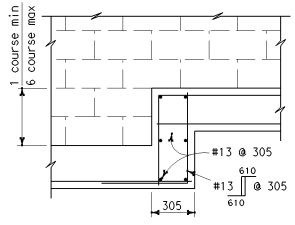

SPREAD FOOTING

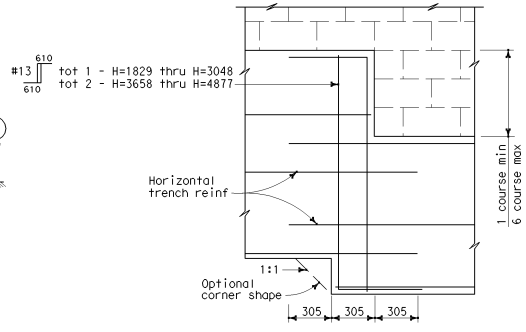

TRENCH FOOTING

FOOTING STEP DETAILS

DESIGN NOTES

DESIGN

Uniform Building Code, 1997 Edition
and the Bridge Design Specifications.

DESIGN WIND LOAD

958 Pa

DESIGN SEISMIC LOAD

0.57 Dead load

REINFORCED CONCRETE

f'c = 22.408 MPa
fy = 413.688 MPa

CONCRETE MASONRY

REGULAR STRENGTH	HIGH STRENGTH	
f'm = 10.342 MPa	f'm = 13.79 MPa	f'm = 17.237 MPa
fb = 3.413 MPa	fb = 4.551 MPa	fb = 5.723 MPa
fs = 165.474 MPa	fs = 165.473 MPa	fs = 165.473 MPa
n = 25.78	n = 19.33	n = 15.47

STATE OF CALIFORNIA
DEPARTMENT OF TRANSPORTATION

SOUNDWALL MASONRY BLOCK ON FOOTING DETAILS (2)

NO SCALE

ALL DIMENSIONS ARE IN MILLIMETERS UNLESS OTHERWISE SHOWN

B15-2

06-15-04

2004 Std PLAN B15-2

Back to Table of Contents

DIST	COUNTY	ROUTE	KILOMETER POST TOTAL PROJECT	SHEET NO.	TOTAL SHEETS

Caltrans Metric

REGISTERED CIVIL ENGINEER

July 1, 2004
PLANS APPROVAL DATE

REGISTERED PROFESSIONAL ENGINEER Douglas J. Dunnuck No. C47240 Exp. 12-31-05 CIVIL STATE OF CALIFORNIA

The State of California or its officers or agents shall not be responsible for the accuracy or completeness of electronic copies of this plan sheet.

To get to the Caltrans web site, go to: http://www.dot.ca.gov

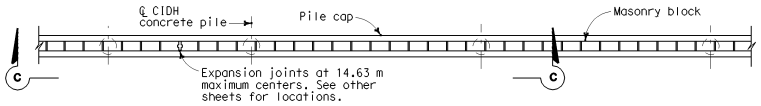

PLAN

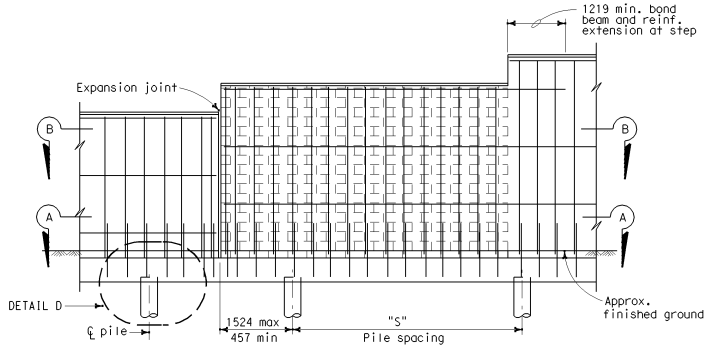

ELEVATION C-C

Note I : For details not shown,see "SOUNDWALL - MASONRY BLOCK ON PILE CAP - DETAILS (2) and "DETAILS (3) sheets.

Note II : See "SOUNDWALL MASONRY BLOCK - MISCELLANEOUS DETAILS" sheet for other details.

SOUNDWALL REINFORCEMENT TABLE

Maximum "H"	ⓐ bars @ 406 max	ⓑ bars @ 406 max	"Y"	f'm (MPa)	Compressive Strength of CMU (MPa)	Maximum "H"
1829	#13	——	——	10.34	13.1	1829
2438	#13	——	——	10.34	13.1	2438
3048	#16	——	——	10.34	13.1	3048
3658	#19	#13	1829	13.79	19.31	3658
4267	#19	#13	2438	17.24	25.86	4267
4877	#19	#13	3048	17.24	25.86	4877

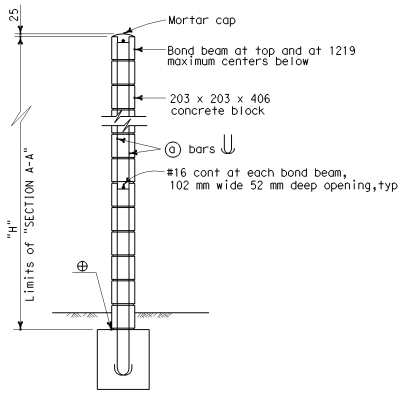

H=1829 THRU H=3048

For details not shown, see H=3658 thru H=4877

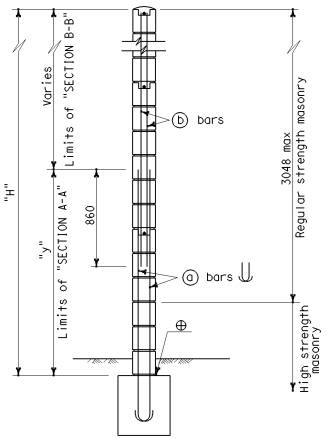

H=3658 THRU H=4877

For details not shown, see H=1829 thru H=3048

TYPICAL SECTION

⊕ Full mortar bed at bottom of wall

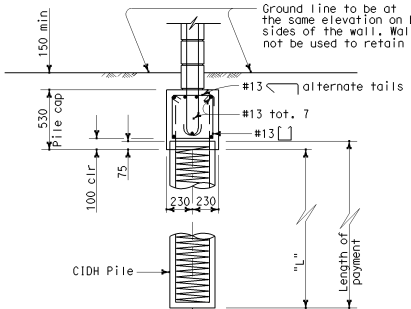

CASE 1

For details not shown, see Case 2.
Level ground (±10%) on one side of the soundwall.

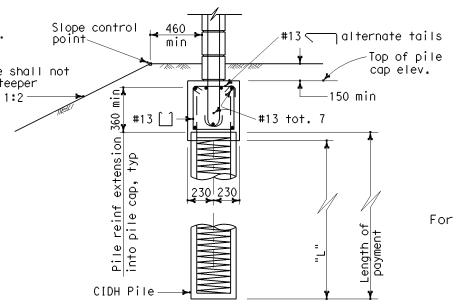

CASE 2

For details not shown, see Case 1.
Level ground (±10%) on one side of the soundwall and sloping ground on the opposite side.

PILE CAP SECTION

STATE OF CALIFORNIA
DEPARTMENT OF TRANSPORTATION

SOUNDWALL MASONRY BLOCK ON PILE CAP DETAILS (1)

NO SCALE

ALL DIMENSIONS ARE IN MILLIMETERS UNLESS OTHERWISE SHOWN

B15-3

2004 Std PLAN B15-3

06-18-04

Back to Table of Contents

DIST	COUNTY	ROUTE	KILOMETER POST TOTAL PROJECT	SHEET NO.	TOTAL SHEETS

Caltrans Metric

REGISTERED CIVIL ENGINEER

July 1, 2004
PLANS APPROVAL DATE

REGISTERED PROFESSIONAL ENGINEER
Douglas J. Dunrud
NO. C47240
Exp. 12-31-05
CIVIL
STATE OF CALIFORNIA

The State of California or its officers or agents shall not be responsible for the accuracy or completeness of electronic copies of this plan sheet.

To get to the Caltrans web site, go to: http://www.dot.ca.gov

GENERAL NOTES

A. For type of block and joint finish, see other sheets.

B. When blocks are laid in stacked bond, ladder type, galvanized joint reinforcement shall be provided. A minimum of 2-3.76 mm wires continuous at 1219 mm maximum to be used. Locate reinforcement in joints that are at the approximate midpoint between bond beams.

C. Horizontal joints shall be tooled concave or may be weathered. Vertical joints shall be tooled concave or may be raked.

D. For intermediate wall heights that are between the "H's" given, use the tabular information for the next higher "H".

E. Masonry strengths are listed in the "SOUNDWALL REINFORCEMENT TABLE".

DESIGN NOTES

DESIGN

Uniform Building Code, 1997 Edition
and the Bridge Design Specifications.

DESIGN WIND LOAD

958 Pa

DESIGN SEISMIC LOAD

0.57 Dead load

REINFORCED CONCRETE

f'c = 22.41 MPa
fy = 413.7 MPa

CONCRETE MASONRY

REGULAR STRENGTH	HIGH STRENGTH	
f'm = 10.34 MPa	f'm = 13.79 MPa	f'm = 17.24 MPa
fb = 3.41 MPa	fb = 4.55 MPa	fb = 5.72 MPa
fs = 165.5 MPa	fs = 165.5 MPa	fs = 165.5 MPa
n = 25.8	n = 19.3	n = 15.5

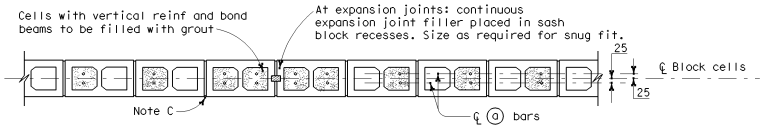

SECTION A-A

For details not shown, see other sections.

H=1829 THRU H=3048

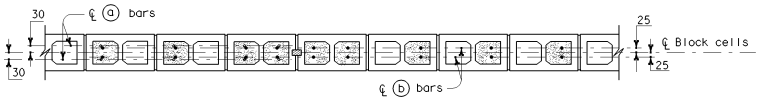

SECTION A-A SECTION B-B

For details not shown, see other sections.

H=3658 THRU H=4877

STATE OF CALIFORNIA
DEPARTMENT OF TRANSPORTATION

SOUNDWALL MASONRY BLOCK ON PILE CAP DETAILS (2)

NO SCALE

ALL DIMENSIONS ARE IN MILLIMETERS UNLESS OTHERWISE SHOWN

B15-4

2004 Std PLAN B15-4

06-18-04

Back to Table of Contents

DIST	COUNTY	ROUTE	KILOMETER POST TOTAL PROJECT	SHEET NO.	TOTAL SHEETS

Caltrans Metric

REGISTERED CIVIL ENGINEER

July 1, 2004
PLANS APPROVAL DATE

REGISTERED PROFESSIONAL ENGINEER Douglas J. Dunrud No. C47240 Exp. 12-31-05 CIVIL STATE OF CALIFORNIA

The State of California or its officers or agents shall not be responsible for the accuracy or completeness of electronic copies of this plan sheet.

To get to the Caltrans web site, go to: http://www.dot.ca.gov

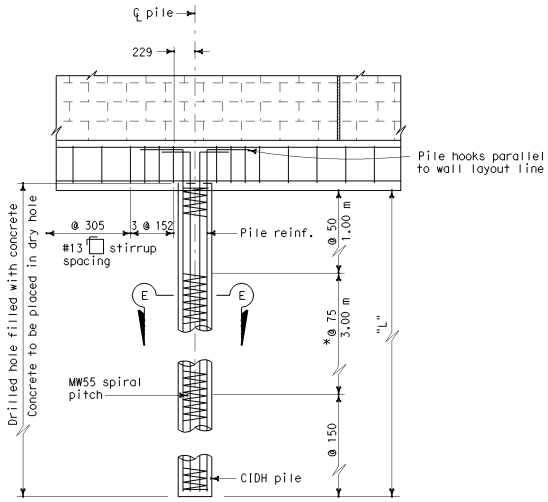

DETAIL D

* @ 50 at option of contractor

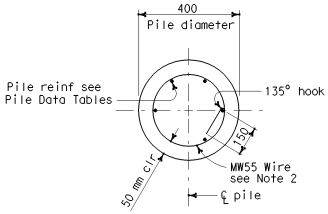

SECTION E-E

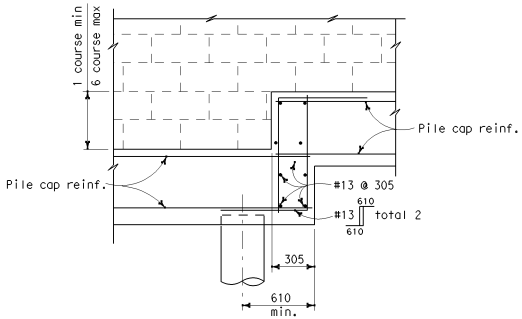

PILE CAP STEP DETAIL

NOTES

I. For details not shown, see "SOUNDWALL - MASONRY BLOCK ON PILE CAP - DETAILS (1)" and "DETAILS (3)" sheets.

II. Lapped splices in spiral reinforcement shall be lapped at least 80 wire diameters. Spiral reinforcement at splices and at ends shall be terminated with a 135° hook with a 150 mm tail hooked around a longitudinal bar.

Case 1 - Level ground (±10%) on both sides of the soundwall

CASE 1										
Maximum H	Ø = 25 min			Ø = 30 min			Ø = 35 min			Maximum H
	S	L	Pile Reinf.	S	L	Pile Reinf.	S	L	Pile Reinf.	
1829	5000	1800	#19 tot. 7	5000	1400	#19 tot. 7	5000	1100	#19 tot. 7	1829
2438	5000	2300	#19 tot. 7	5000	1800	#19 tot. 7	5000	1400	#19 tot. 7	2438
3048	5000	2700	#22 tot. 6	5000	2100	#22 tot. 6	5000	1700	#19 tot. 7	3048
3658	4700	2900	#25 tot. 7	4900	2400	#25 tot. 7	5000	1900	#25 tot. 7	3658
4267	3500	2900	#25 tot. 7	3700	2400	#25 tot. 7	3800	1900	#25 tot. 7	4267
4877	3400	3100	#25 tot. 7	3500	2600	#25 tot. 7	3700	2100	#25 tot. 7	4877

PILE DATA

Case 2 - Level ground (±10%) on traffic side of the soundwall and sloping ground on opposite side.

CASE 2							
Maximum H	Ø = 30 min			Ø = 35 min			Maximum H
	S	L	Pile Reinf.	S	L	Pile Reinf.	
1829	5000	3400	#22 tot. 7	5000	2500	#22 tot. 6	1829
2438	5000	4100	#22 tot. 7	5000	3000	#22 tot. 7	2438
3048	5000	4800	#25 tot. 7	5000	3500	#25 tot. 7	3048
3658	3800	4700	#25 tot. 7	4200	3700	#25 tot. 7	3658
4267	2900	4600	#25 tot. 7	3200	3600	#25 tot. 7	4267
4877	2700	4900	#25 tot. 7	3000	3900	#25 tot. 7	4877

PILE DATA

STATE OF CALIFORNIA
DEPARTMENT OF TRANSPORTATION

SOUNDWALL
MASONRY BLOCK ON PILE CAP
DETAILS (3)

NO SCALE

ALL DIMENSIONS ARE IN MILLIMETERS UNLESS OTHERWISE SHOWN

B15-5

2004 Std PLAN B15-5

06-10-04

Back to Table of Contents

DIST	COUNTY	ROUTE	KILOMETER POST TOTAL PROJECT	SHEET NO.	TOTAL SHEETS

REGISTERED CIVIL ENGINEER

July 1, 2004
PLANS APPROVAL DATE

REGISTERED PROFESSIONAL ENGINEER Douglas J. Dunnuck NO. C47240 Exp. 12-31-05 CIVIL STATE OF CALIFORNIA

The State of California or its officers or agents shall not be responsible for the accuracy or completeness of electronic copies of this plan sheet.

To get to the Caltrans web site, go to: http://www.dot.ca.gov

Caltrans Metric

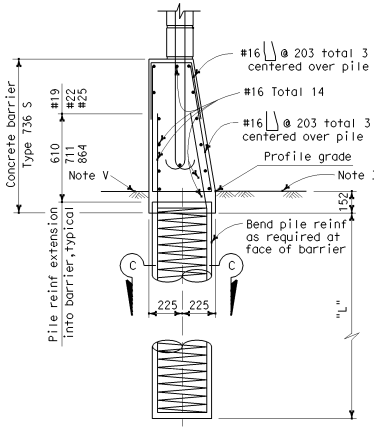

CASE 1

For details not shown, See Case 2.
Level ground ±10% on both sides of barrier.

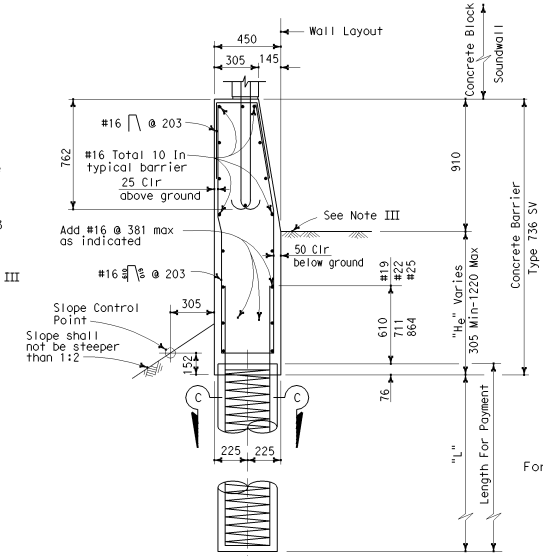

CASE 2

For details not shown, See Case 1.
Level ground ±10% at the traffic side of barrier and sloping ground on the opposite side.

BARRIER SECTIONS

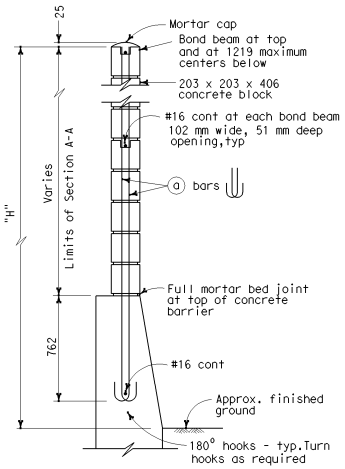

H=1930 THRU H=3150

For details not shown, see H=3750 thru H=4980.

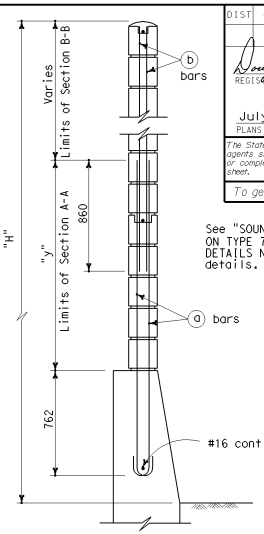

H=3759 THRU H=4978

For details not shown, see H=1930 thru H=3150.

See "SOUNDWALL - MASONRY BLOCK ON TYPE 736S/SV BARRIER -- DETAILS NO. 3" sheet for pile details.

TYPICAL SECTIONS

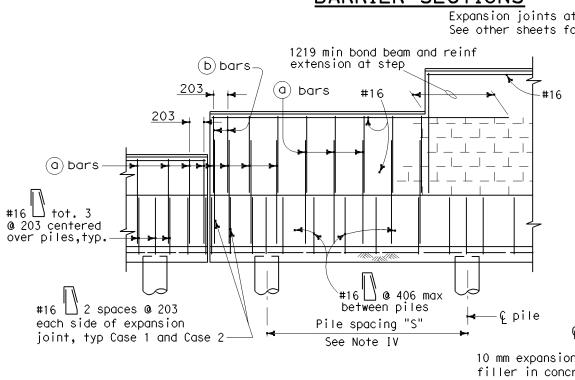

CASE 1

For details not shown, See Case 2.

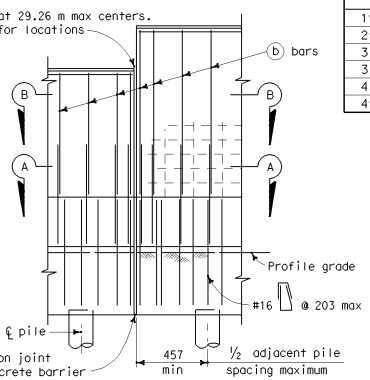

CASE 2

For details not shown, See Case 1.

PART ELEVATIONS

SOUNDWALL REINFORCEMENT TABLE

Maximum H	(a) bars @ 406 max	(b) bars @ 406 max	"y"	f'm (MPa)	Compressive Strength of CMU (MPa)	Maximum H
1930	#13	---	---	10.34	13.1	1930
2540	#13	---	---	10.34	13.1	2540
3150	#13	---	---	10.34	13.1	3150
3759	#16	#13	1524	10.34	13.1	3759
4369	#19	#13	2134	10.34	13.1	4369
4978	#19	#13	2743	17.24	25.6	4978

NOTES I THROUGH VI

I. Details shown are primarily to conform design of soundwalls to Type 736S and Type 736 SV Concrete Barriers. For soundwall details conforming with barriers see "SOUNDWALL - MASONRY BLOCK ON TYPE 736S/SV BARRIER - DETAILS (2) and (3) sheets.

II. For details not shown, see "SOUNDWALL - MASONRY BLOCK ON TYPE 736S/SV BARRIER - DETAILS NO. 2 and DETAILS NO. 3" sheets.

III. Slope ground at traffic side of barrier to drain. Maximum slope ±10%. See Std. Plan B11-56, Note D.

IV. Pile spacing may be varied, but shall not exceed the tabular values. See "DETAILS (3)".

V. For Case 1 - ground line to be at the same elevation on both sides of the barrier. Barrier shall not be used to retain earth.

VI. See "SOUNDWALL MASONRY BLOCK - MISCELLANEOUS DETAILS" sheet for other details.

NOTES A THROUGH G

A. For type of block, type of block bond, and joint finish, see other sheets.

B. When blocks are laid in stacked bond, ladder type, galvanized joint reinforcement shall be provided. A minimum of 2 - 3.76 mm wires continuous at 1219 mm maximum to be used. Locate reinforcement in joints that are at the approximate midpoint between bond beams.

C. Horizontal joints shall be tooled concave or may be weathered. Vertical joints shall be tooled concave or may be raked.

D. For intermediate wall heights (H), or barrier depths (H_e), that are between the values given, use the tabular information for the next higher (H) or (H_e).

E. Class 2 concrete to be used for the barrier.

F. Masonry strengths are listed in the "SOUNDWALL REINFORCEMENT TABLE".

STATE OF CALIFORNIA
DEPARTMENT OF TRANSPORTATION

SOUNDWALL MASONRY BLOCK ON TYPE 736S/SV BARRIER DETAILS (1)

NO SCALE

ALL DIMENSIONS ARE IN MILLIMETERS UNLESS OTHERWISE SHOWN

B15-6

2004 Std PLAN B15-6

06-18-04

Back to Table of Contents

DIST	COUNTY	ROUTE	KILOMETER POST TOTAL PROJECT	SHEET NO.	TOTAL SHEETS

Caltrans Metric

Douglas J. Dunnuck
REGISTERED CIVIL ENGINEER

July 1, 2004
PLANS APPROVAL DATE

REGISTERED PROFESSIONAL ENGINEER Douglas J. Dunnuck No. C47240 Exp. 12-31-05 CIVIL STATE OF CALIFORNIA

The State of California or its officers or agents shall not be responsible for the accuracy or completeness of electronic copies of this plan sheet.

To get to the Caltrans web site, go to: http://www.dot.ca.gov

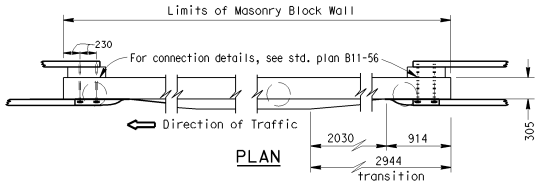

PLAN

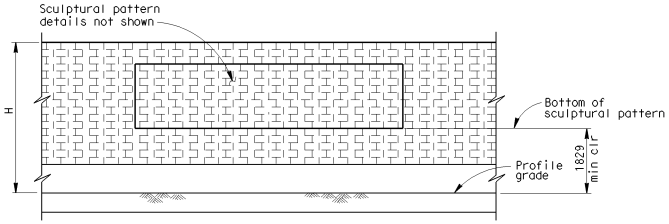

CLEARANCE DETAIL

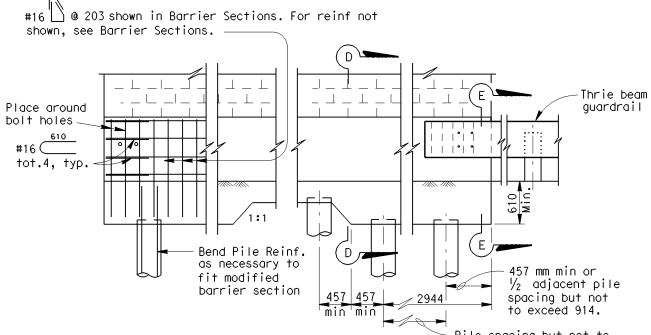

ELEVATION

METAL BEAM GUARDRAIL ANCHORAGE

For details not shown, see Standard Plan B11-56.

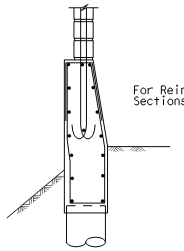

SECTION D-D

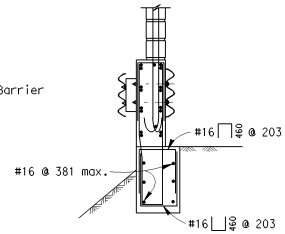

SECTION E-E

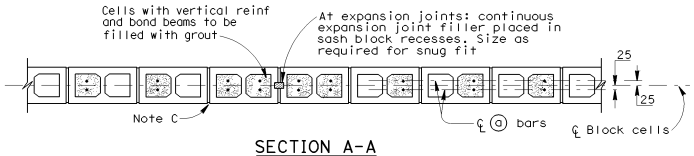

SECTION A-A

For details not shown, see other details.

H=1930 THRU H=3150

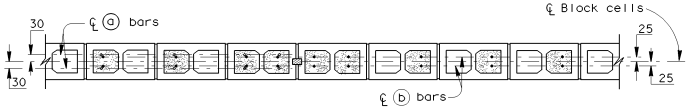

SECTION A-A SECTION B-B

For details not shown, see other details.

H=3759 THRU H=4978

DESIGN NOTES

DESIGN

Uniform Building Code, 1997 Edition
and the Bridge Design Specifications.

DESIGN WIND LOAD

1293 Pa

DESIGN SEISMIC LOAD

0.57 Dead load

REINFORCED CONCRETE

f'c = 22.408 MPa
fy = 413.688 MPa

CONCRETE MASONRY

REGULAR STRENGTH	HIGH STRENGTH	
f'm = 10.34 MPa	f'm = 13.79 MPa	f'm = 17.24 MPa
fb = 3.41 MPa	fb = 4.55 MPa	fb = 5.72 MPa
fs = 165.5 MPa	fs = 165.5 MPa	fs = 165.5 MPa
n = 25.8	n = 19.3	n = 15.5

STATE OF CALIFORNIA
DEPARTMENT OF TRANSPORTATION

SOUNDWALL MASONRY BLOCK ON TYPE 736S/SV BARRIER DETAILS (2)

NO SCALE

ALL DIMENSIONS ARE IN MILLIMETERS UNLESS OTHERWISE SHOWN

B15-7

06-15-04

2004 Std PLAN B15-7

Back to Table of Contents

DIST	COUNTY	ROUTE	KILOMETER POST TOTAL PROJECT	SHEET NO.	TOTAL SHEETS

Caltrans Metric

REGISTERED CIVIL ENGINEER

July 1, 2004
PLANS APPROVAL DATE

REGISTERED PROFESSIONAL ENGINEER Douglas J. Dunrud NO. C47240 Exp. 12-31-05 CIVIL STATE OF CALIFORNIA

The State of California or its officers or agents shall not be responsible for the accuracy or completeness of electronic copies of this plan sheet.

To get to the Caltrans web site, go to: http://www.dot.ca.gov

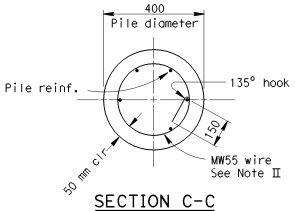

SECTION C-C

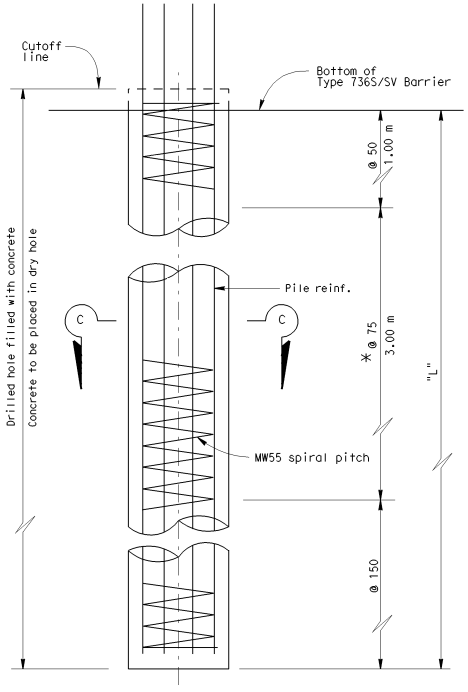

ELEVATION

* @ 50 at option of contractor.

CASE 1: PILE DATA

Maximum H	Ø = 25 min S	Ø = 25 min L	Ø = 25 min Pile Reinf.	Ø = 30 min S	Ø = 30 min L	Ø = 30 min Pile Reinf.	Ø = 35 min S	Ø = 35 min L	Ø = 35 min Pile Reinf.	Maximum H
1930	3000	2200	#19 tot. 6	3000	1900	#19 tot. 6	3000	1600	#19 tot. 6	1930
2540	3000	2500	#19 tot. 6	3000	2100	#19 tot. 6	3000	1800	#19 tot. 6	2540
3150	3000	2800	#19 tot. 6	3000	2400	#19 tot. 6	3000	2000	#19 tot. 6	3150
3759	3000	3100	#22 tot. 6	3000	2600	#22 tot. 7	3000	2200	#22 tot. 6	3759
4369	3000	3300	#25 tot. 7	3000	2800	#22 tot. 7	3000	2400	#22 tot. 7	4369
4978	3000	3600	#25 tot. 7	3000	3000	#25 tot. 7	3000	2600	#25 tot. 7	4978

CASE 2: PILE DATA

	Maximum H	Ø = 30 min S	Ø = 30 min L	Ø = 30 min Pile Reinf.	Ø = 35 min S	Ø = 35 min L	Ø = 35 min Pile Reinf.	Maximum H
H_e = 300	1930	3000	4400	#22 tot. 7	3000	3400	#22 tot. 7	1930
	2540	3000	4800	#22 tot. 7	3000	3800	#22 tot. 7	2540
	3150	2700	4900	#22 tot. 7	3000	4100	#22 tot. 7	3150
	3759	2250	4900	#22 tot. 7	3000	4400	#25 tot. 7	3759
	4369	1900	4900	#22 tot. 7	2600	4400	#25 tot. 7	4369
	4978	1650	4900	#22 tot. 7	2400	4500	#25 tot. 7	4978
H_e = 600	1930	2850	4900	#22 tot. 7	3000	3900	#22 tot. 7	1930
	2540	2400	4900	#22 tot. 7	3000	4200	#22 tot. 7	2540
	3150	2050	4900	#22 tot. 7	3000	4500	#25 tot. 7	3150
	3759	1800	4900	#22 tot. 7	2750	4600	#25 tot. 7	3759
	4369	1550	4900	#22 tot. 7	2350	4600	#25 tot. 7	4369
	4978	1350	4900	#22 tot. 7	2100	4600	#25 tot. 7	4978
H_e = 900	1930	2050	4900	#22 tot. 7	3000	4400	#25 tot. 7	1930
	2540	1800	4900	#22 tot. 7	2800	4500	#25 tot. 7	2540
	3150	1600	4900	#22 tot. 7	2500	4600	#25 tot. 7	3150
	3759	1400	4900	#22 tot. 7	2250	4600	#25 tot. 7	3759
	4369	1250	4900	#22 tot. 7	2000	4600	#25 tot. 7	4369
	4978	1100	4900	#22 tot. 7	1800	4700	#25 tot. 7	4978
H_e = 1200	1930	1500	4900	#22 tot. 7	2250	4400	#25 tot. 7	1930
	2540	1350	4900	#22 tot. 7	2100	4500	#25 tot. 7	2540
	3150	1200	4900	#22 tot. 7	1900	4500	#25 tot. 7	3150
	3759	1050	4900	#22 tot. 7	1750	4500	#25 tot. 7	3759
	4369	950	4900	#22 tot. 7	1600	4600	#25 tot. 7	4369
	4978	900	4900	#22 tot. 7	1450	4600	#25 tot. 7	4978

NOTES

I. For details not shown, see "SOUNDWALL - MASONRY BLOCK ON TYPE 736S/736SV BARRIER - DETAILS (1) and DETAILS (2)" sheets.

II. Lapped splices in spiral reinforcement shall be lapped at least 80 wire diameters. Spiral reinforcement at splices and at ends shall be terminated with a 135° hook with a 150 mm tail hooked around a longitudinal bar.

STATE OF CALIFORNIA
DEPARTMENT OF TRANSPORTATION

SOUNDWALL MASONRY BLOCK ON TYPE 736S/SV BARRIER DETAILS (3)

NO SCALE

ALL DIMENSIONS ARE IN MILLIMETERS UNLESS OTHERWISE SHOWN

B15-8

06-18-04

Back to Table of Contents

DIST	COUNTY	ROUTE	KILOMETER POST TOTAL PROJECT	SHEET NO.	TOTAL SHEETS

Caltrans Metric

REGISTERED CIVIL ENGINEER

July 1, 2004
PLANS APPROVAL DATE

REGISTERED PROFESSIONAL ENGINEER Douglas J. Dunnuck No. C47240 Exp. 12-31-05 CIVIL STATE OF CALIFORNIA

The State of California or its officers or agents shall not be responsible for the accuracy or completeness of electronic copies of this plan sheet.

To get to the Caltrans web site, go to: http://www.dot.ca.gov

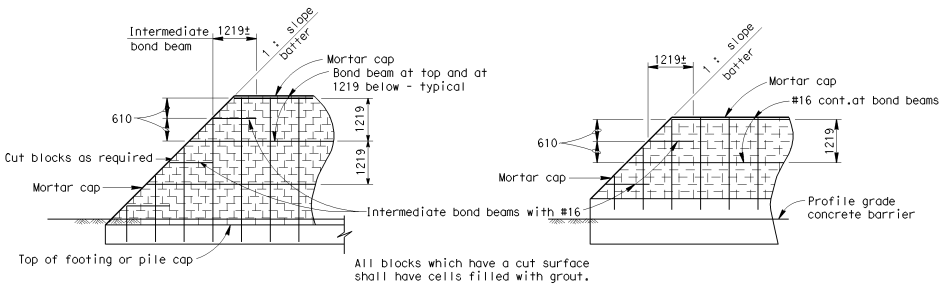

TYPE I

Slope batter shall not be flatter than 1:1.

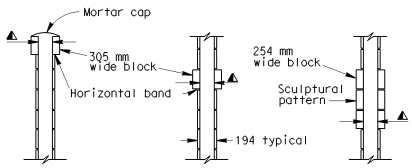

ARCHITECTURAL ALTERNATIVES

▲ Cell width to match 203 mm block.

NOTES

305 mm wide block not allowed within 1829 mm of profile grade.

For structural details,see other sheets.

Type III not permitted for soundwalls with "H" less than 3048 mm.

The end of the wall details may be used with any of the standard supporting foundations for masonry block. The foundations shown for the different types are for the purpose of illustration only.

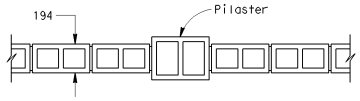

305 mm WIDE PROJECTING BLOCK

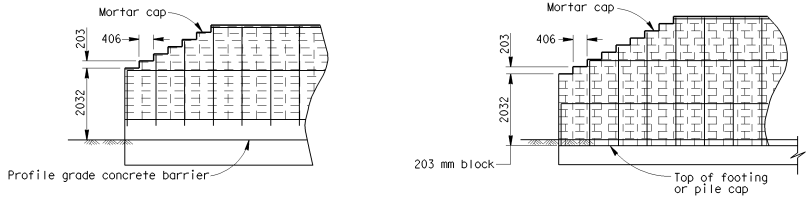

TYPE II

203 mm x 203 mm x 406 mm BLOCK

H	R	S	T
3048	1219	—	—
3251	813	610	—
3454	813	813	—
3658	1016	813	—
3861	1016	1016	—
4064	1219	1016	—
4267	1219	1219	—
4470	1016	813	813
4674	1016	1016	813
4877	1016	1016	1016

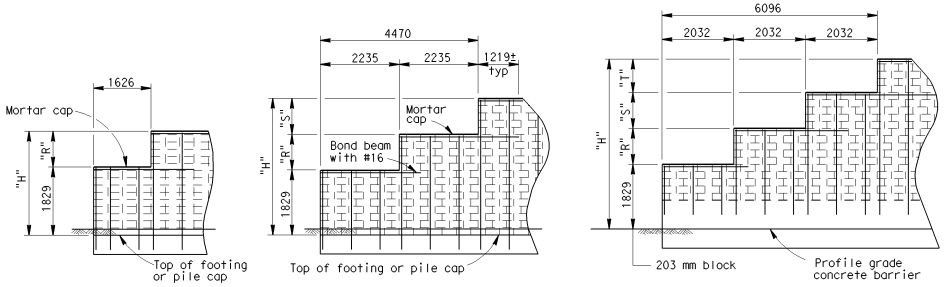

H=3048
SINGLE STEP

H=3251 TO H=4267
2 STEPS

H=4470 TO H=4877
3 STEPS

TYPE III

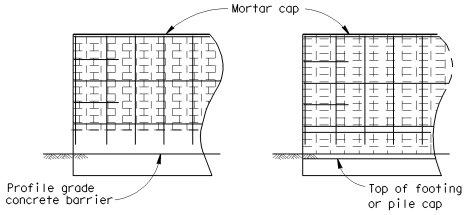

TYPE IV

END OF WALL DETAILS

STATE OF CALIFORNIA
DEPARTMENT OF TRANSPORTATION

SOUNDWALL MASONRY BLOCK MISCELLANEOUS DETAILS

NO SCALE

ALL DIMENSIONS ARE IN MILLIMETERS UNLESS OTHERWISE SHOWN

B15-9

06-10-04

Back to Table of Contents

DIST	COUNTY	ROUTE	KILOMETER POST TOTAL PROJECT	SHEET NO.	TOTAL SHEETS

Caltrans Metric

REGISTERED CIVIL ENGINEER

July 1, 2004
PLANS APPROVAL DATE

REGISTERED PROFESSIONAL ENGINEER Douglas J. Dunnuck No. C47240 Exp. 12-31-05 CIVIL STATE OF CALIFORNIA

The State of California or its officers or agents shall not be responsible for the accuracy or completeness of electronic copies of this plan sheet.

To get to the Caltrans web site, go to: http://www.dot.ca.gov

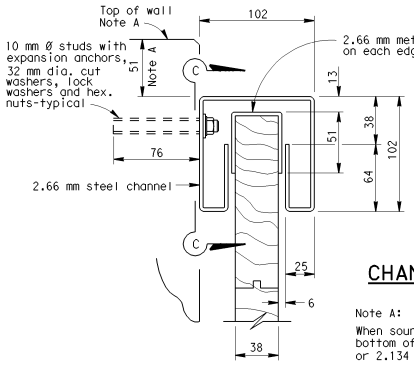

DETAIL "A"

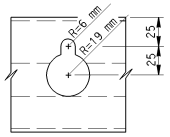

SECTION C-C
CHANNEL MOUNTING HOLE

Note A:
When soundwall as measured from the bottom of the gate opening exceeds 2.032 m or 2.134 m, see 1.524 m GATE DETAILS (2) sheet.

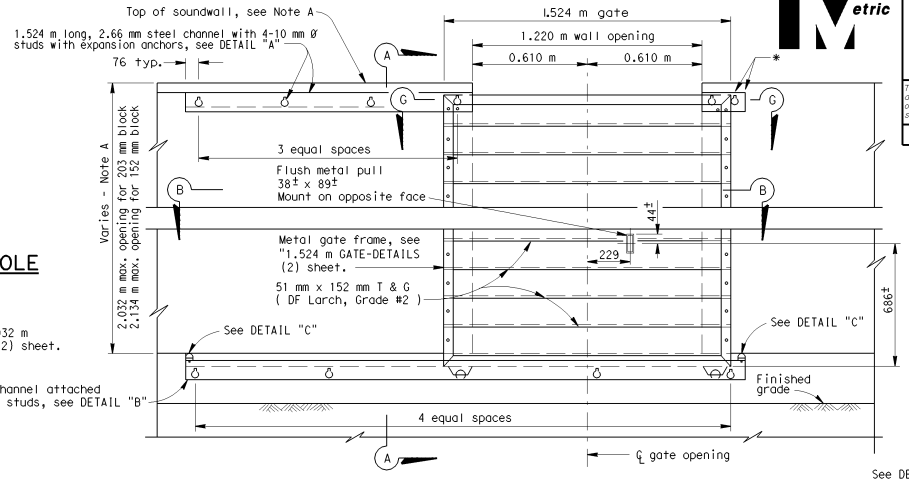

GATE ELEVATION - BACK

* 229 mm long channel attached with 2-10 mm Ø studs, see DETAIL "A"

Note:
Those blocks upon which the supporting steel channels are mounted shall be smooth faced on the mounting side

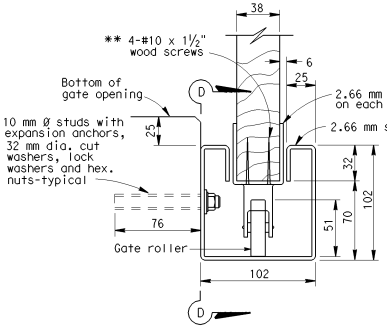

DETAIL "B"

** Wood screws are in U.S. Customary Units.

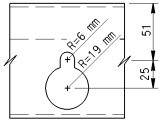

SECTION D-D
CHANNEL MOUNTING HOLE

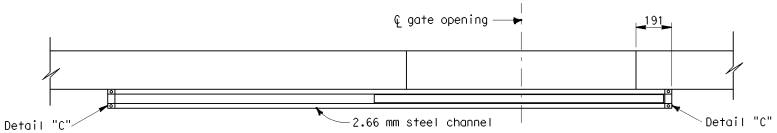

SECTION B-B

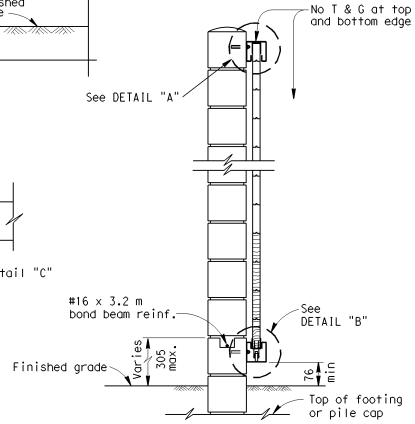

SECTION A-A

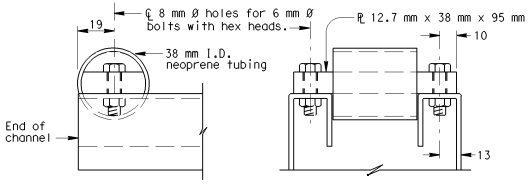

SIDE VIEW END VIEW
DETAIL "C" STOP DETAIL

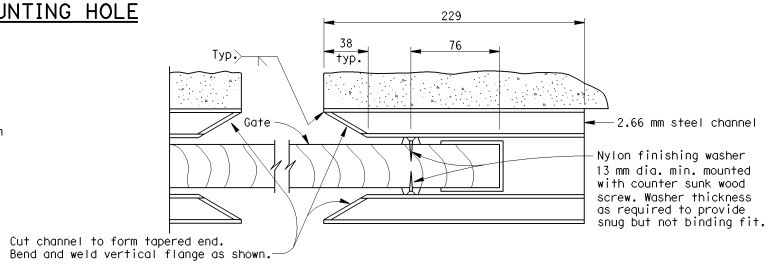

SECTION G-G
For location of nylon finishing washers, see "1.524m GATE-DETAILS (2) sheet.

NOTES

All wood to be stained. All hardware to be galvanized. All structural metal to be galvanized after fabrication.

Gate mounted on sloping grade shall be oriented to be in closed position when at lower grade point.

Two masonry cells adjacent to each side of gate to be reinforced and grouted.

STATE OF CALIFORNIA
DEPARTMENT OF TRANSPORTATION

SOUNDWALL MASONRY BLOCK ON FOOTING OR PILE CAP 1.524 m ACCESS GATE DETAIL (1)

NO SCALE

ALL DIMENSIONS ARE IN MILLIMETERS UNLESS OTHERWISE SHOWN

B15-10

06-18-04

Back to Table of Contents

DIST	COUNTY	ROUTE	KILOMETER POST TOTAL PROJECT	SHEET NO.	TOTAL SHEETS

Caltrans Metric

REGISTERED CIVIL ENGINEER

July 1, 2004
PLANS APPROVAL DATE

REGISTERED PROFESSIONAL ENGINEER
Douglas J. Dunrud
No. C47240
Exp. 12-31-05
CIVIL
STATE OF CALIFORNIA

The State of California or its officers or agents shall not be responsible for the accuracy or completeness of electronic copies of this plan sheet.

To get to the Caltrans web site, go to: http://www.dot.ca.gov

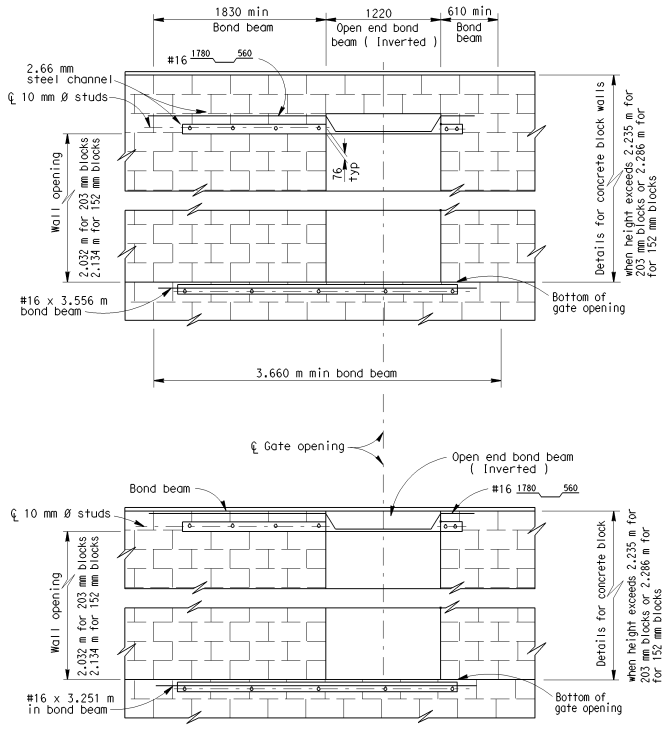

PART ELEVATION (BACK)

For details not shown, see above.

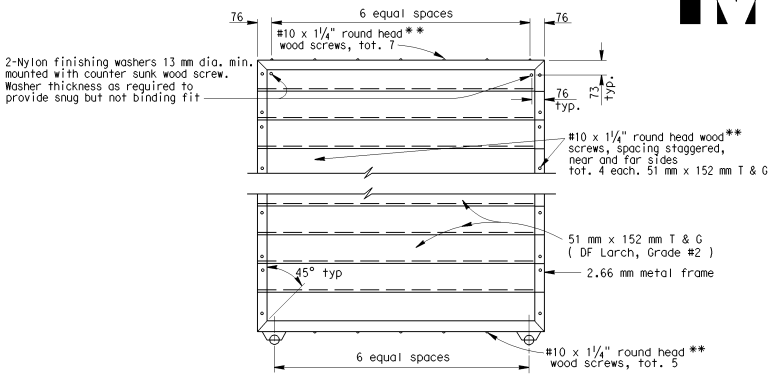

ELEVATION - METAL FRAME

** Wood screws are in U.S. Customary Units.

STATE OF CALIFORNIA
DEPARTMENT OF TRANSPORTATION

SOUNDWALL MASONRY BLOCK ON FOOTING OR PILE CAP 1.524 m ACCESS GATE DETAILS (2)

NO SCALE

ALL DIMENSIONS ARE IN MILLIMETERS UNLESS OTHERWISE SHOWN

B15-11

06-10-04

Back to Table of Contents

DIST	COUNTY	ROUTE	KILOMETER POST TOTAL PROJECT	SHEET NO.	TOTAL SHEETS

REGISTERED CIVIL ENGINEER

July 1, 2004
PLANS APPROVAL DATE

REGISTERED PROFESSIONAL ENGINEER Douglas J. Dunnuck NO. C47240 Exp. 12-31-05 CIVIL STATE OF CALIFORNIA

The State of California or its officers or agents shall not be responsible for the accuracy or completeness of electronic copies of this plan sheet.

To get to the Caltrans web site, go to: http://www.dot.ca.gov

Caltrans Metric

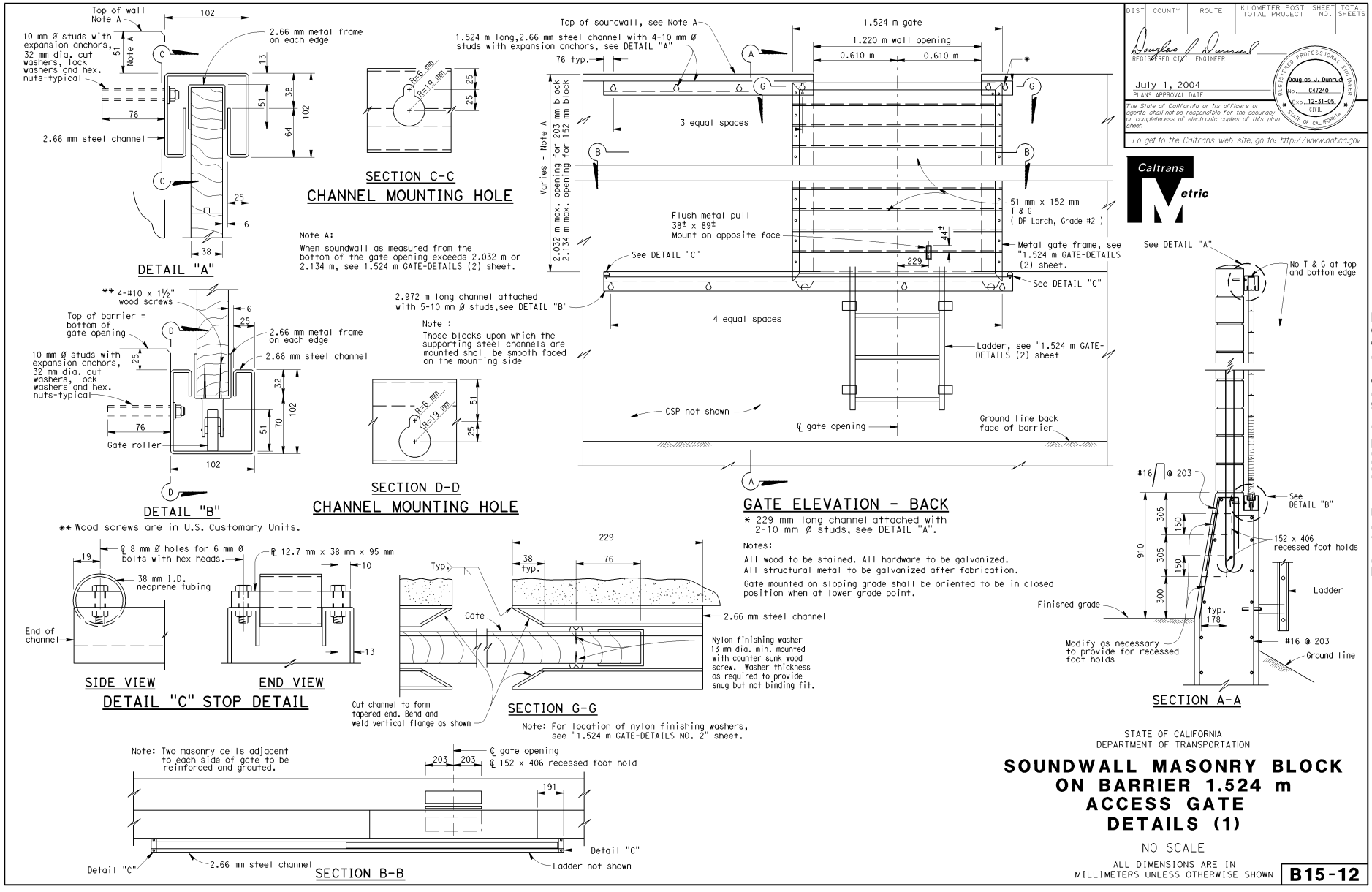

STATE OF CALIFORNIA
DEPARTMENT OF TRANSPORTATION

SOUNDWALL MASONRY BLOCK ON BARRIER 1.524 m ACCESS GATE DETAILS (1)

NO SCALE

ALL DIMENSIONS ARE IN MILLIMETERS UNLESS OTHERWISE SHOWN

B15-12

06-10-04

Back to Table of Contents

DIST	COUNTY	ROUTE	KILOMETER POST TOTAL PROJECT	SHEET NO.	TOTAL SHEETS

REGISTERED CIVIL ENGINEER

July 1, 2004
PLANS APPROVAL DATE

REGISTERED PROFESSIONAL ENGINEER Douglas J. Dunrud No. C47240 Exp. 12-31-05 CIVIL STATE OF CALIFORNIA

The State of California or its officers or agents shall not be responsible for the accuracy or completeness of electronic copies of this plan sheet.

To get to the Caltrans web site, go to: http://www.dot.ca.gov

Caltrans Metric

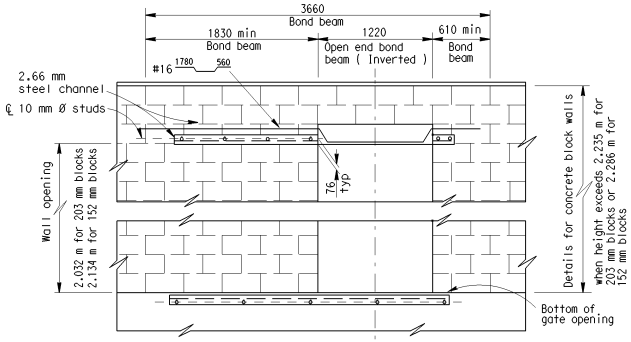

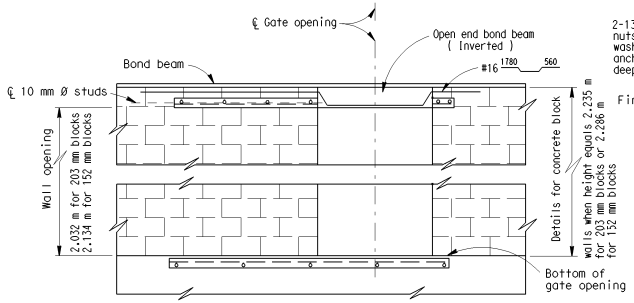

PART ELEVATION (BACK)

For details not shown, see above.

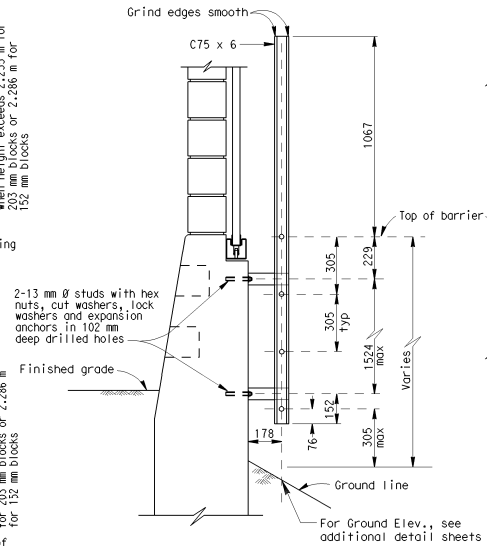

SECTION E-E

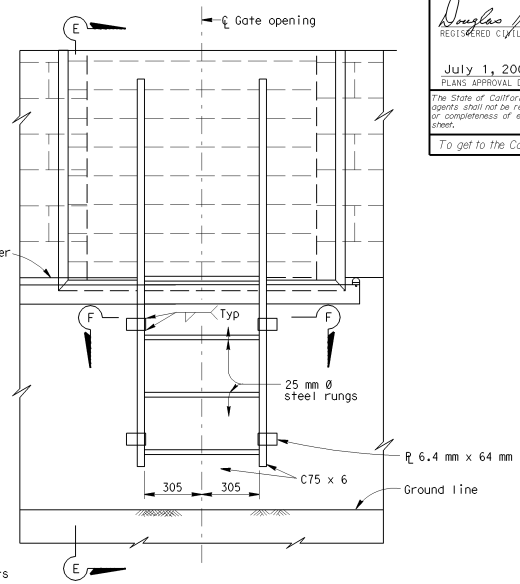

ELEVATION (BACK)

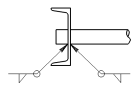

DETAIL A

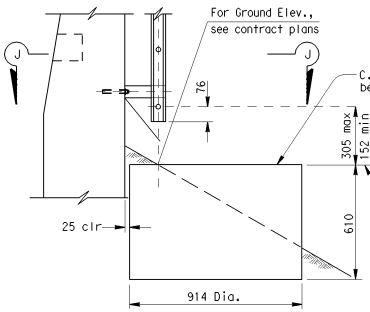

Note: C.S.P. landing required when slope of ground behind barrier is steeper than 1:8. See additional detail sheets for location where required

C.S.P. LANDING DETAILS

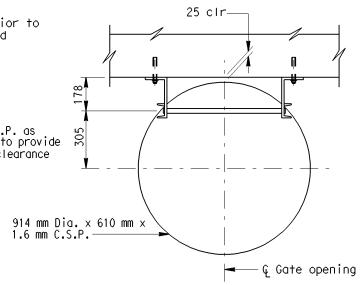

SECTION J-J

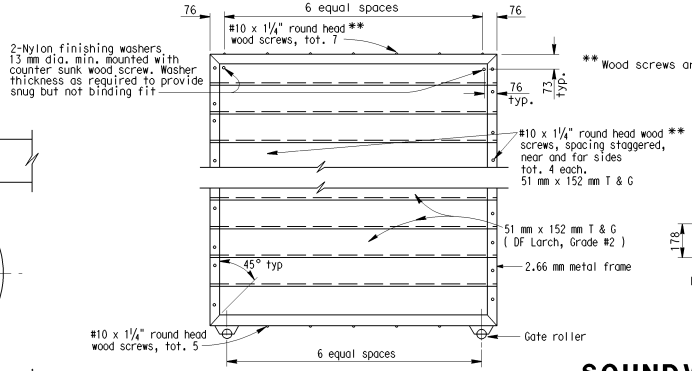

** Wood screws are in U.S. Customary Units.

ELEVATION - METAL FRAME

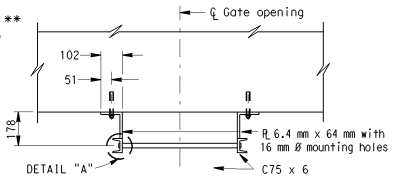

SECTION F-F

STATE OF CALIFORNIA
DEPARTMENT OF TRANSPORTATION

SOUNDWALL MASONRY BLOCK ON BARRIER 1.524 m ACCESS GATE DETAILS (2)

NO SCALE

ALL DIMENSIONS ARE IN MILLIMETERS UNLESS OTHERWISE SHOWN

B15-13

06-18-04

Back to Table of Contents

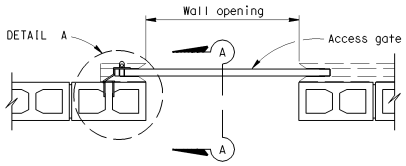

PLAN
LOCK ON
GATE SIDE OF WALL

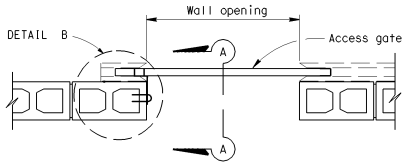

PLAN
LOCK ON
INSIDE OF WALL OPENING

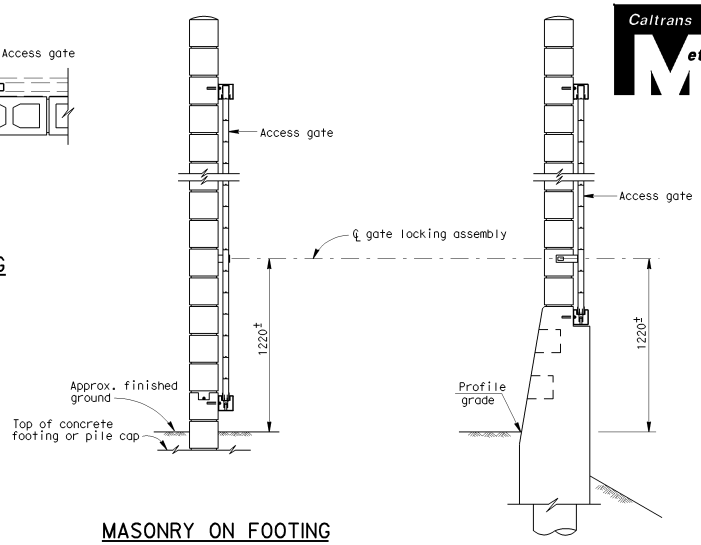

MASONRY ON FOOTING
OR PILE CAP

MASONRY ON BARRIER

SECTION A-A

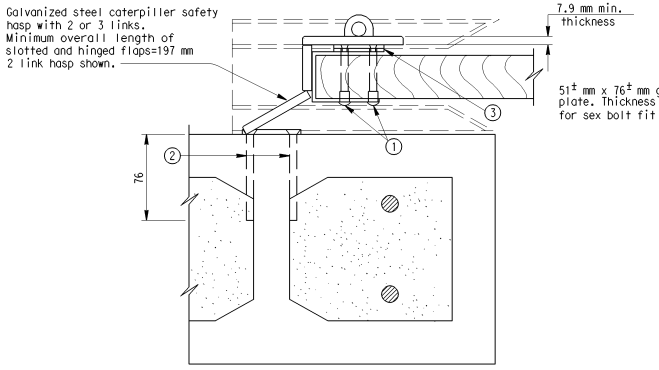

DETAIL A

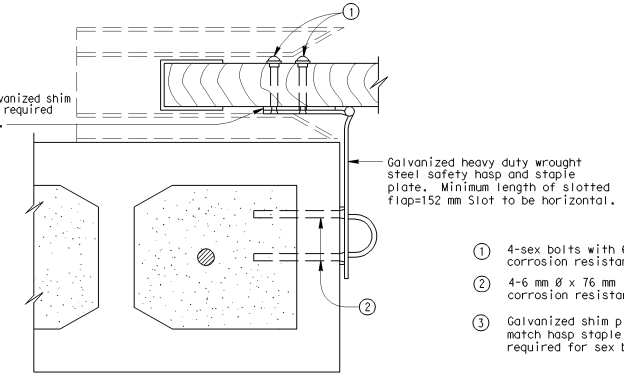

DETAIL B

NOTES

Masonry anchors to be installed after the grout in the block cells has attained specified strength.

Contractor may submit alternative gate locking assemblies for approval by the engineer.

See other sheets for gate details.

1. 4-sex bolts with 6 mm-20 flat head corrosion resistant machine screws.
2. 4-6 mm Ø x 76 mm long flat head sleeve type corrosion resistant masonry anchors.
3. Galvanized shim plate. Size as required to match hasp staple plate±. Thickness as required for sex bolt fit up.

STATE OF CALIFORNIA
DEPARTMENT OF TRANSPORTATION

SOUNDWALL MASONRY BLOCK ACCESS GATE LOCKING DETAILS

NO SCALE

ALL DIMENSIONS ARE IN MILLIMETERS UNLESS OTHERWISE SHOWN

B15-14

Caltrans Metric

DIST	COUNTY	ROUTE	KILOMETER POST TOTAL PROJECT	SHEET NO.	TOTAL SHEETS

REGISTERED CIVIL ENGINEER

July 1, 2004
PLANS APPROVAL DATE

REGISTERED PROFESSIONAL ENGINEER Douglas J. Dunrud No. C47240 Exp. 12-31-05 CIVIL STATE OF CALIFORNIA

The State of California or its officers or agents shall not be responsible for the accuracy or completeness of electronic copies of this plan sheet.

To get to the Caltrans web site, go to: http://www.dot.ca.gov

2004 Std PLAN B15-14

06-10-04

Back to Table of Contents

DIST	COUNTY	ROUTE	KILOMETER POST TOTAL PROJECT	SHEET NO.	TOTAL SHEETS

Caltrans Metric

REGISTERED CIVIL ENGINEER

July 1, 2004
PLANS APPROVAL DATE

REGISTERED PROFESSIONAL ENGINEER Douglas J. Dunnuck No. C47240 Exp. 12-31-05 CIVIL STATE OF CALIFORNIA

The State of California or its officers or agents shall not be responsible for the accuracy or completeness of electronic copies of this plan sheet.

To get to the Caltrans web site, go to: http://www.dot.ca.gov

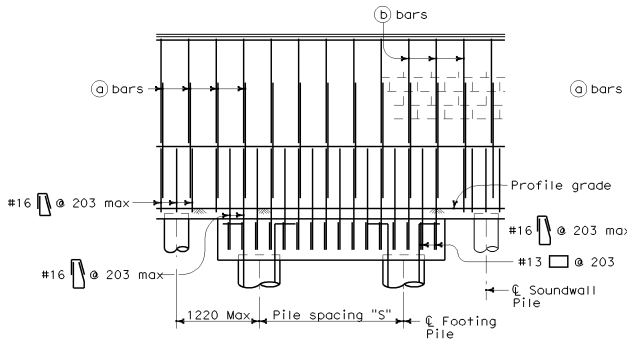

CASE 1

For details not shown, see Case 2.

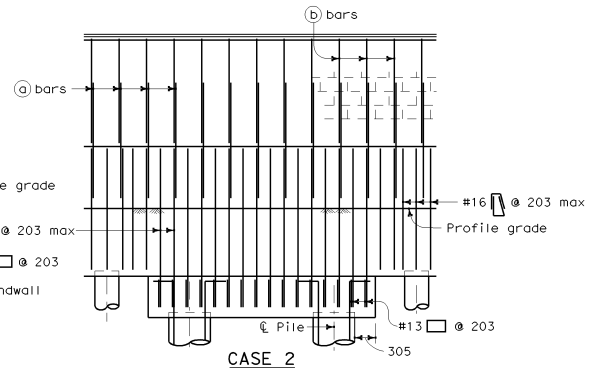

CASE 2

For details not shown, see Case 1.

PART ELEVATIONS

DESIGN NOTES

DESIGN

Uniform Building Code, 1997 Edition
and the Bridge Design Specifications.

DESIGN WIND LOAD

1293 Pa for all heights (H)

DESIGN SEISMIC LOAD

0.57 Dead load

REINFORCED CONCRETE

f'c = 22.408 MPa
fy = 413.688 MPa

CONCRETE MASONRY

REGULAR STRENGTH	HIGH STRENGTH	
f'm = 10.34 MPa	f'm = 13.79 MPa	f'm = 17.24 MPa
fb = 3.41 MPa	fb = 4.55 MPa	fb = 5.72 MPa
fs = 165.5 MPa	fs = 165.5 MPa	fs = 165.5 MPa
n = 25.8	n = 19.3	n = 15.5

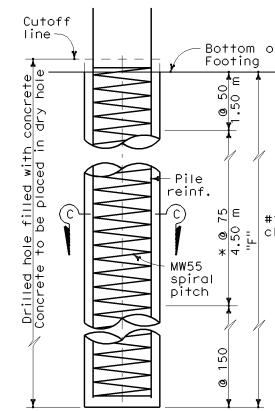

ELEVATION

* @ 50 at option of contractor.

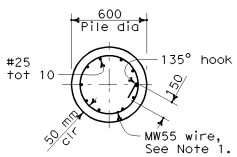

SECTION C-C

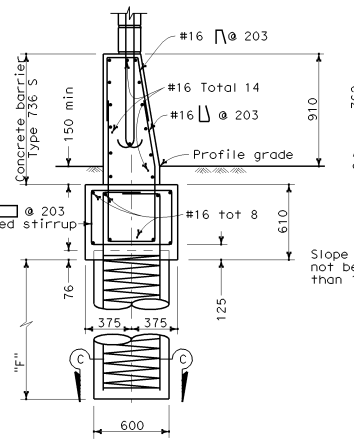

CASE 1

Level ground ±10% on both sides of barrier.
For details not shown, see Case 2.

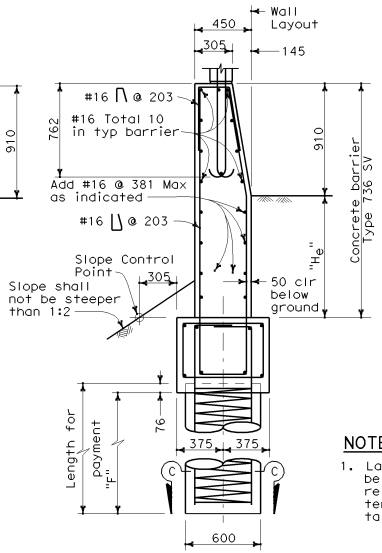

CASE 2

Level ground ±10% at the traffic side of barrier
and sloping ground on the opposite side.
For details now shown, see Case 1.

BARRIER SECTIONS

NOTES

1. Lapped splices in Spiral reinforcement shall be lapped at least 80 wire diameters. Spiral reinforcement at splices and at ends shall be terminated with a 135° hook with a 150 mm tail hooked around a logitudinal bar.

CASE 1 : PILE DATA

H	ø = 25 min Maximum S	ø = 25 min F	ø = 30 min Maximum S	ø = 30 min F	ø = 35 min Maximum S	ø = 35 min F	H
1930	5000	2300	5000	2000	5000	1600	1930
2540	5000	2600	5000	2200	5000	1900	2540
3150	5000	2900	5000	2500	5000	2100	3150
3759	5000	3200	5000	2700	5000	2300	3759
4369	5000	3500	5000	2900	5000	2500	4369
4978	5000	3700	5000	3200	5000	2700	4978

CASE 2 : PILE DATA

	H	ø = 30 min Maximum S	ø = 30 min F	ø = 35 min Maximum S	ø = 35 min F	H
H_e = 300	1930	5000	4600	5000	3600	1930
	2540	5000	5000	5000	4000	2540
	3150	5000	5400	5000	4300	3150
	3759	5000	5800	5000	4600	3759
	4369	5000	6200	5000	4900	4369
	4978	5000	6500	5000	5200	4978
H_e = 600	1930	5000	5300	5000	4100	1930
	2540	5000	5600	5000	4400	2540
	3150	5000	6000	5000	4700	3150
	3759	5000	6300	5000	5000	3759
	4369	5000	6700	5000	5300	4369
	4978	4800	6800	5000	5600	4978
H_e = 900	1930	5000	6000	5000	4600	1930
	2540	5000	6300	5000	4900	2540
	3150	5000	6600	5000	5200	3150
	3759	4500	6700	5000	5400	3759
	4369	4100	6700	4900	5700	4369
	4978	3800	6800	4500	5700	4978
H_e = 1200	1930	4200	6300	5000	5200	1930
	2540	3900	6400	5000	5400	2540
	3150	3700	6500	4600	5500	3150
	3759	3400	6500	4200	5500	3759
	4369	3200	6600	3900	5600	4369
	4978	3000	6700	3600	5600	4978

STATE OF CALIFORNIA
DEPARTMENT OF TRANSPORTATION

SOUNDWALL MASONRY BLOCK ON TYPE 736S/SV BARRIER ON PILE FOOTING FOR SPANNING UTILITIES

NO SCALE

ALL DIMENSIONS ARE IN MILLIMETERS UNLESS OTHERWISE SHOWN

B15-15

06-18-04

Back to Table of Contents

DIST	COUNTY	ROUTE	KILOMETER POST TOTAL PROJECT	SHEET NO.	TOTAL SHEETS

Caltrans Metric

REGISTERED CIVIL ENGINEER

July 1, 2004
PLANS APPROVAL DATE

REGISTERED PROFESSIONAL ENGINEER Greg W. Edwards No. C36386 Exp. 6-30-06 CIVIL STATE OF CALIFORNIA

The State of California or its officers or agents shall not be responsible for the accuracy or completeness of electronic copies of this plan sheet.

To get to the Caltrans web site, go to: http://www.dot.ca.gov

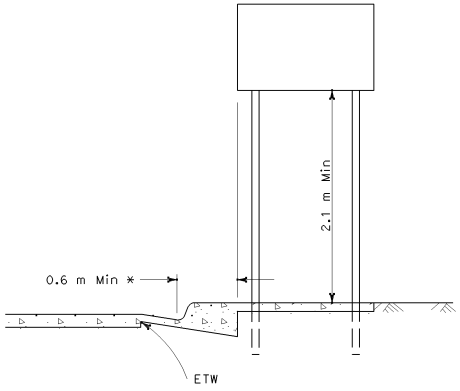

* 0.3 m Min where lateral clearance limited

URBAN LOCATIONS

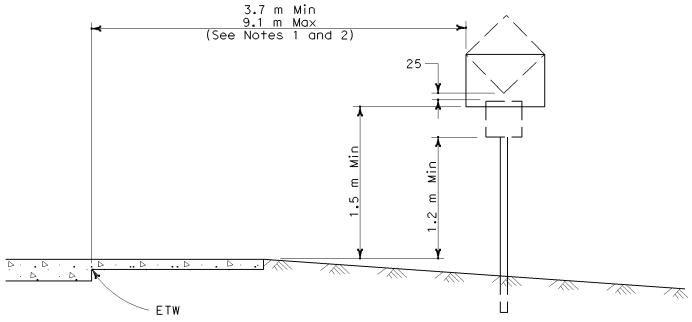

RURAL LOCATIONS

CONVENTIONAL HIGHWAYS AND INTERCHANGE AREAS

NOTES

1. When clear roadside recovery areas are provided, signs shall be placed as far from the edge of traveled way as possible, up to a maximum of 9.1 m. When possible, they shall be placed in protected locations.
2. Signs in medians shall be placed at midpoint of median up to a maximum distance of 9.1 m from edge of traveled way. When appropriate, signs for opposing directions shall be placed back to back.
3. Does not apply at locatioons where minimum horizontal distance is not reasonable due to terrain characteristics, steep slopes, roadway features, or when signs are installed on structures or signal or lighting standards.

ETW = Edge of Traveled Way

EPS = Edge of Paved Shoulder

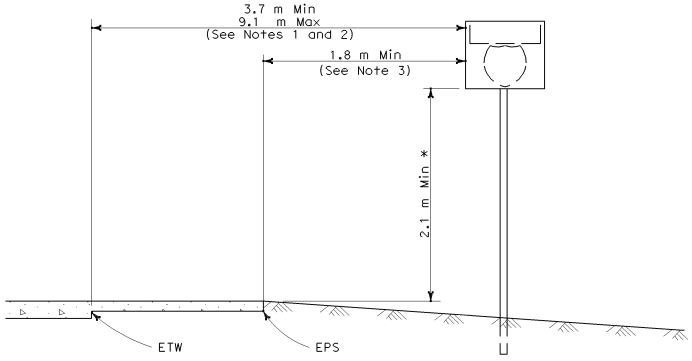

* 1.5 m Min at 9.1 m from ETW

REGULATORY AND WARNING SIGNS AND ROUTE SHIELDS

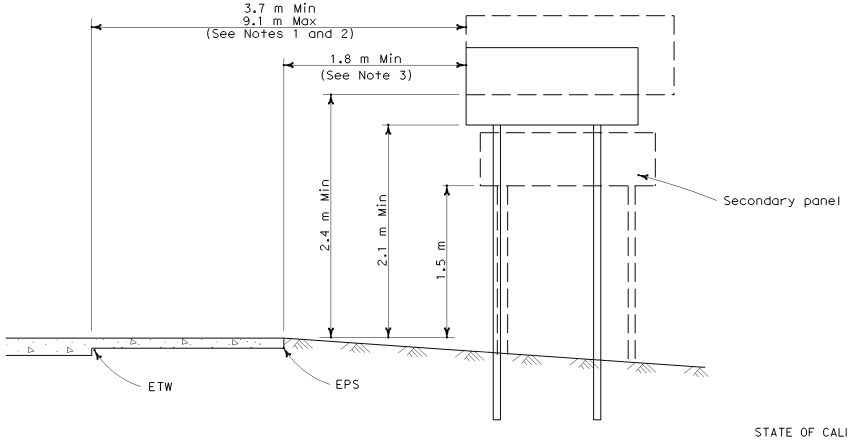

GUIDE SIGNS

FREEWAY AND EXPRESSWAY LOCATIONS

STATE OF CALIFORNIA
DEPARTMENT OF TRANSPORTATION

ROADSIDE SIGNS TYPICAL INSTALLATION DETAILS No. 1

NO SCALE

ALL DIMENSIONS ARE IN MILLIMETERS UNLESS OTHERWISE SHOWN

RS1

06-18-04

2004 Std PLAN RS1

Back to Table of Contents

Caltrans Metric

DIST	COUNTY	ROUTE	KILOMETER POST TOTAL PROJECT	SHEET NO.	TOTAL SHEETS

REGISTERED CIVIL ENGINEER

July 1, 2004
PLANS APPROVAL DATE

REGISTERED PROFESSIONAL ENGINEER Tillat Sattar No. C42892 Exp. 03-31-2006 CIVIL STATE OF CALIFORNIA

The State of California or its officers or agents shall not be responsible for the accuracy or completeness of electronic copies of this plan sheet.

To get to the Caltrans web site, go to: http://www.dot.ca.gov

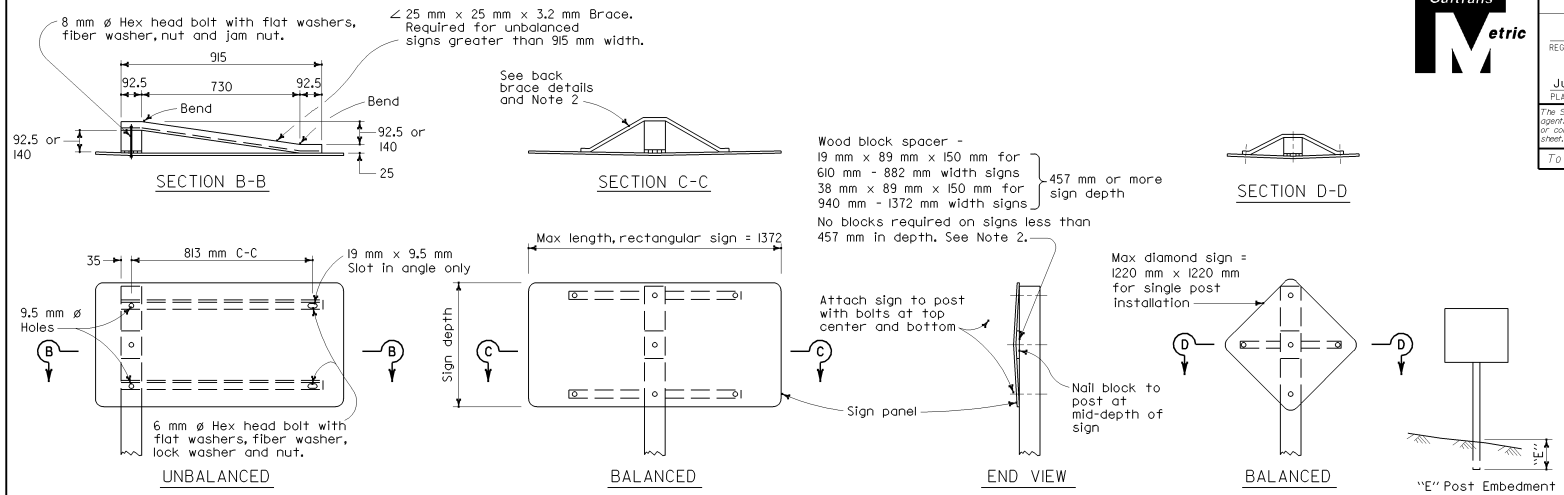

SINGLE POST INSTALLATION

See Note 5 regarding breakaway feature for single post installations.

POST EMBEDMENT	
POST SIZE (mm)	"E" (mm)
89x89	1100
89x140	1400
140x140	1550
140x184	1850

POST SPACING TABLE		
SIGN PANEL LENGTH	SIGN PANEL OVERHANG	POST SPACING
"A"	"B"	"C"
(m)	(mm)	(mm)
1.420 - 1.670	175 - 300	1070
1.830 & 1.980	300 & 375	1230
2.135 & 2.285	375 & 450	1385
2.440	450	1540
2.590	500	1590
2.740	550	1640
2.890	575	1740
2.540	610	1320
3.200	610	1980
3.350, 3.500, 3.660	610, 685, 765	2130
3.810	765	2280
3.960	765	2430
4.110, 4.420	765, 920	2580
4.270, 4.420	840, 915	2590
4.720, 4.870	915, 990	2890
5.030	990	3050
5.180, 5.330	990, 1065	3200
5.490, 5.640	1065, 1140	3360
5.790	1140	3510
5.940, 6.100	1140, 1220	3660
6.250, 6.400	1140, 1215	3970
6.550	1215	4120
6.700, 6.850	1215, 1290	4270
7.010	1290	4430
7.160, 7.310	1290, 1365	4580

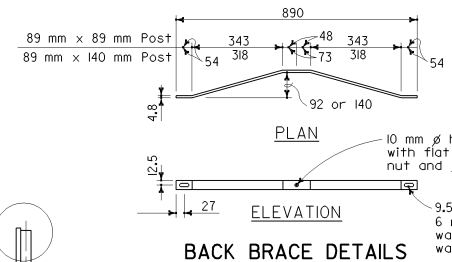

BACK BRACE DETAILS

See Note 2

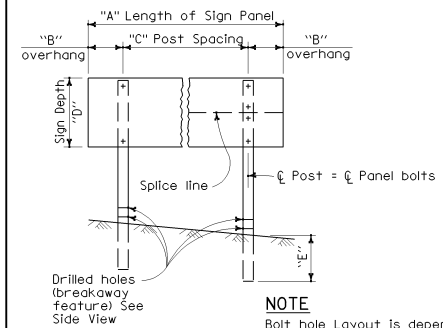

NOTE

Bolt hole Layout is dependent on type of panel. Drill holes in post to match panel.

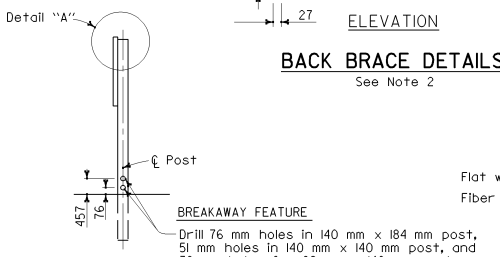

TWO POST INSTALLATION

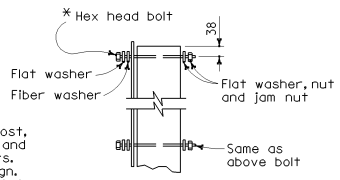

*7.9 mm Diameter for single sheet aluminum panel signs.

9.5 mm Diameter for laminated panel signs or framed single sheet aluminum panel signs

NOTES

1. Place long dimension of post cross section normal to sign axis. See Section C-C.
2. Balanced single post installations of unframed single sheet aluminum panel signs shall have block spacers if 457 mm or more in depth and a combination of block spacers and back braces if 457 mm or more in depth and 864 mm or more in width. Sign panels less than 457 mm in depth and 864 mm or more in width shall have back braces only.
3. For post size see sign layout, format or quantity sheets.
4. Balanced single post installations of Laminated Panel and Framed single sheet panel signs require back braces when 864 mm or more in length.
5. Breakaway feature for single post installation shall be the same as the breakaway feature shown for the two post installation.
6. Tolerance for diameter of drilled holes in breakaway feature is ±3 mm.

STATE OF CALIFORNIA
DEPARTMENT OF TRANSPORTATION

ROADSIDE SIGNS-WOOD POST TYPICAL INSTALLATION DETAILS No. 2

NO SCALE

ALL DIMENSIONS ARE IN MILLIMETERS UNLESS OTHERWISE SHOWN

RS2

06-22-04

Back to Table of Contents

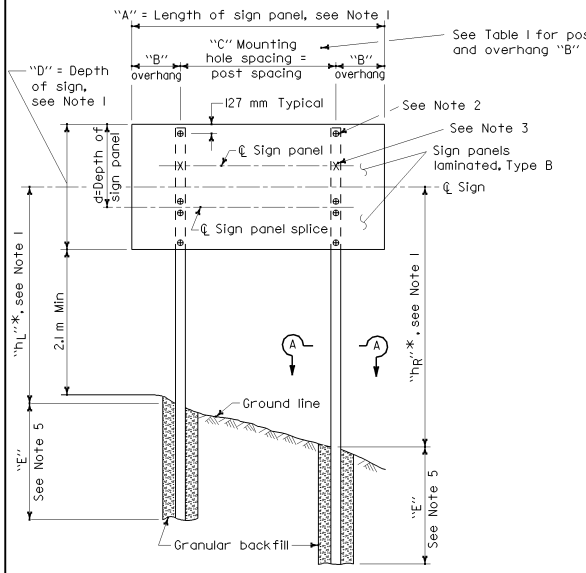

ELEVATION

* Dimensions shown on project plans are for fabrication. At time of installation adjust these dimensions to provide a level sign approximately 2.1 m above roadway shoulder.

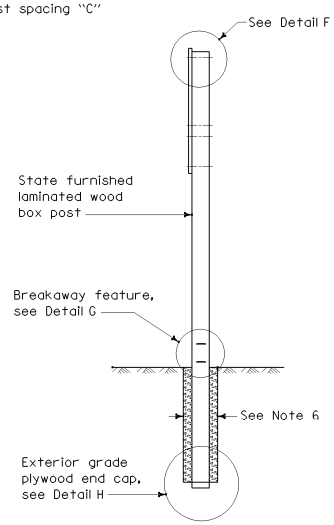

SIDE VIEW

SIGN PANEL LENGTH (m) (See Note 1)	SIGN PANEL OVERHANG (mm)	MOUNTING HOLE SPACING (m)
"A"	"B"	"C"
2.44	457	1.52
2.74	559	1.63
3.05	610	1.83
3.35	610	2.13
3.66	762	2.13
3.96	762	2.44
4.27	762	2.74
4.57	914	2.74
4.88	991	2.90
5.18	991	3.20
5.49	1067	3.35
5.79	1143	3.51
6.10	1219	3.66
6.40	1295	3.81
6.71	1295	4.11
7.01	1372	4.27
7.32	1448	4.42

TABLE 1

"hL" or "hR" (m)	TOTAL SIGN AREA (m2) 3.7 to 8.4	8.4+ to 13.0	13.0+ to 17.6	17.6+ to 22.3	22.3+ to 26.9
2.7 to 4.0	1.8	2.0	2.3	2.6	2.7
4.0+ to 5.2	1.8	2.1	2.4	2.7	3.0
5.2+ to 6.4	1.8	2.3	2.7	2.7	
6.4+ to 7.9	2.1	2.4	2.7		

TABLE 2

Minimum post embedment "E" for Type L post

NOTES

1. See Project Plans for:
   Location of each sign.
   Length of sign panel "A".
   Depth of sign "D".
   Height "h_L" and "h_R" of centerline of sign above ground line at each post.
   Type of post, L and M.
   See Standard Plans RS1 for other details.
2. "⊕" indicates location of 12.5 mm lag screws and existing holes in panels. Lag screws are to be embedded at least 25 mm into post using 8 mm diameter pilot holes.
3. "x" indicates location of additional 12.5 mm lag screws required when the depth of sign panel (d) and the length of sign panel (A) are as follows:

d	A
1524 mm	5.18 to 7.32 m
1372 mm	5.78 to 7.32 m
1219 mm	6.40 to 7.32 m
1067 mm	7.32 m

4. Type B laminated sign panels are 29 mm thick for sign lengths of 4.6 m and less. Panel over 4.6 m in length are 67 mm thick.
5. Embedment "E" for Type L post shall conform to the requirements in Table 2. Embedment for Type M posts shall be 1.8 m minimum.
6. Diameter of post holes for Type L posts shall be at least 750 mm. Diameter of post holes for Type M posts shall be at least 600 mm.

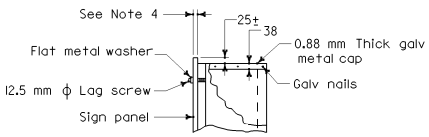

DETAIL F

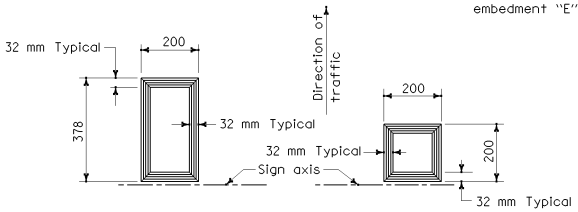

TYPE L POST

TYPE M POST

SECTION A-A

GALV METAL CAP

State furnished

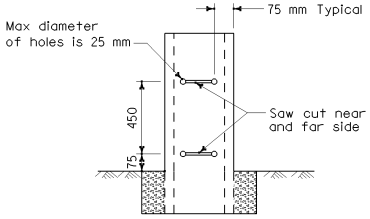

DETAIL G

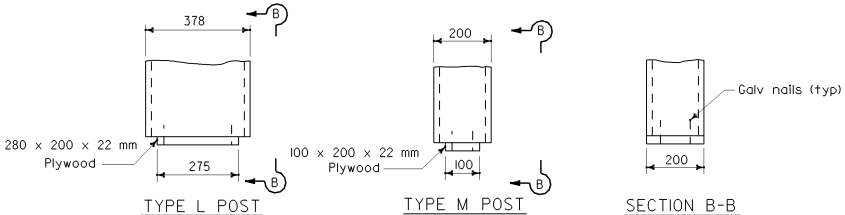

TYPE L POST

TYPE M POST

SECTION B-B

DETAIL H

STATE OF CALIFORNIA
DEPARTMENT OF TRANSPORTATION

ROADSIDE SIGNS LAMINATED WOOD BOX POST TYPICAL INSTALLATION DETAILS No. 3

NO SCALE

ALL DIMENSIONS ARE IN MILLIMETERS UNLESS OTHERWISE SHOWN

RS3

DIST	COUNTY	ROUTE	KILOMETER POST TOTAL PROJECT	SHEET NO.	TOTAL SHEETS

REGISTERED CIVIL ENGINEER

July 1, 2004
PLANS APPROVAL DATE

REGISTERED PROFESSIONAL ENGINEER Tiliat Sattar No. C42892 Exp. 03-31-2006 CIVIL STATE OF CALIFORNIA

The State of California or its officers or agents shall not be responsible for the accuracy or completeness of electronic copies of this plan sheet.

To get to the Caltrans web site, go to: http://www.dot.ca.gov

06-22-04

Back to Table of Contents

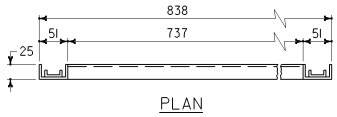

PLAN

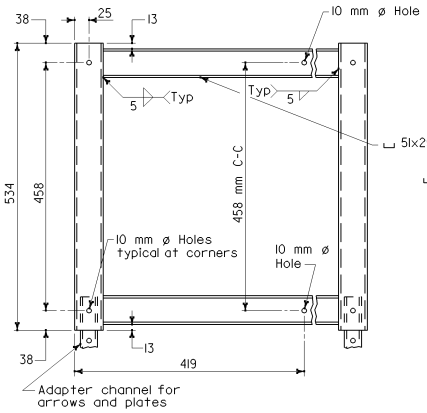

ELEVATION

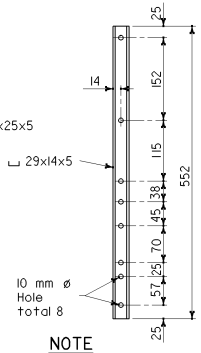

NOTE

Adapter channel rests inside frame channel when used.

ADAPTER CHANNEL

GALVANIZED STEEL FRAME

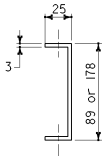

PLAN

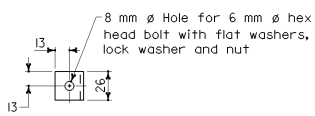

ELEVATION

SPECIAL BRACKET

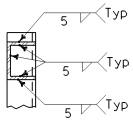

SECTION A-A

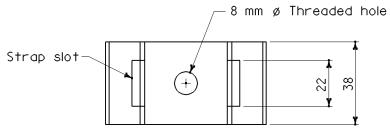

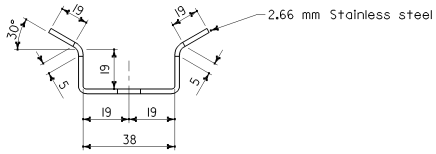

SADDLE BRACKET

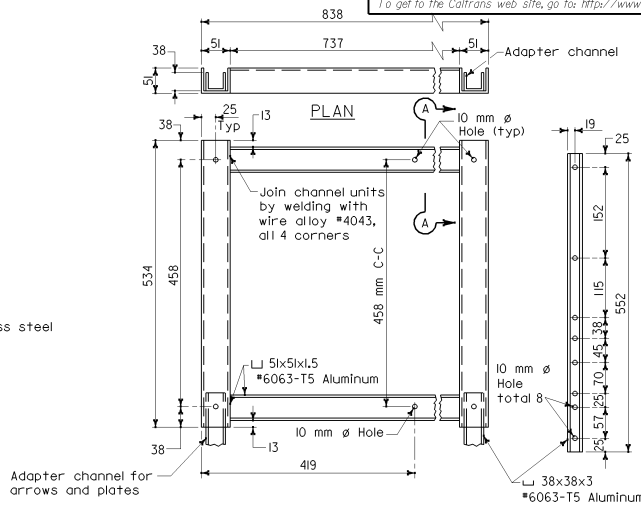

ELEVATION

ADAPTER CHANNEL

ALUMINUM FRAME

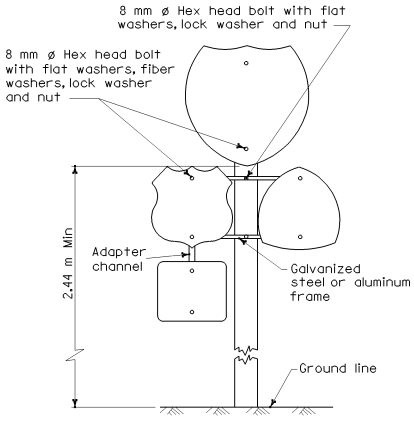

ELEVATION

MULTIPLE SIGN INSTALLATION

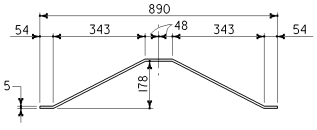

PLAN

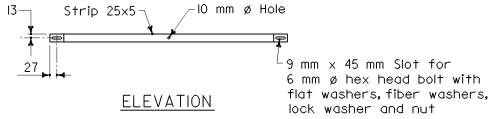

ELEVATION

BACK BRACE DETAILS

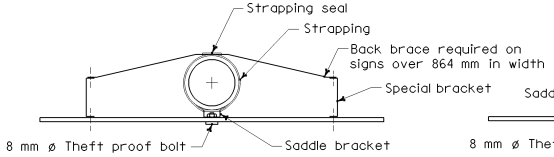

SINGLE SIGN

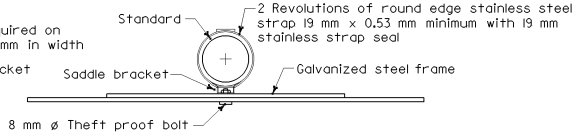

MULTIPLE SIGN

INSTALLATION ON ELECTROLIER, SIGNAL STANDARD OR SIGN STRUCTURE POST

Caltrans Metric

DIST	COUNTY	ROUTE	KILOMETER POST TOTAL PROJECT	SHEET NO.	TOTAL SHEETS

REGISTERED CIVIL ENGINEER

July 1, 2004
PLANS APPROVAL DATE

REGISTERED PROFESSIONAL ENGINEER Tillat Sattar No. C42892 Exp. 03-31-2006 CIVIL STATE OF CALIFORNIA

The State of California or its officers or agents shall not be responsible for the accuracy or completeness of electronic copies of this plan sheet.

To get to the Caltrans web site, go to: http://www.dot.ca.gov

STATE OF CALIFORNIA
DEPARTMENT OF TRANSPORTATION

ROADSIDE SIGNS TYPICAL INSTALLATION DETAILS No. 4

NO SCALE

ALL DIMENSIONS ARE IN MILLIMETERS UNLESS OTHERWISE SHOWN

RS4

06-22-04

Back to Table of Contents

INSTRUCTIONS TO FABRICATOR

PROJECT PLANS SHOW:

1. Sign structure location.
2. Length of structure frame.
3. Panel size and locations on structure.
4. Walkway length for two post signs.
5. Post type and height to bottom of frame.
6. Base plate elevation.
7. Footing elevation or location of pile foundation.
8. Photoelectric unit location if required.

REFER TO THE FOLLOWING STANDARD PLANS FOR DETAILS NOT SHOWN ON PROJECT PLANS:

Sheet #	SHEET NAME
S-1	Overhead Signs-Truss Instructions and Examples
S-2	Overhead Signs-Truss, Single Post Type, Post Types II to IX
S-3	Overhead Signs-Truss, Single Post Type, Base Plate and Anchorage Details
S-4	Overhead Signs-Truss, Single Post Type, Structural Frame Members Details No. 1
S-5	Overhead Signs-Truss, Single Post Type, Structural Frame Members Details No. 2
S-6	Overhead Signs-Truss, Gusset Plate Details
S-7	Overhead Signs-Truss, Single Post Type, Square Pedestal Foundation
S-8	Overhead Signs-Truss, Single Post Type, Round Pedestal Foundation
S-9	Overhead Signs-Truss, Two Post Type, Post Types I-S through VII-S
S-10	Overhead Signs-Truss, Two Post Type, Base Plate and Anchorage Details
S-11	Overhead Signs-Truss, Two Post Type, Structural Frame Members
S-12	Overhead Signs-Truss, Structural Frame Details
S-13	Overhead Signs-Truss, Frame Juncture Details
S-14	Overhead Signs-Truss, Two Post Type, Square Pedestal Foundation
S-15	Overhead Signs-Truss, Two Post Type, Round Pedestal Foundation
S-16	Overhead Signs, Walkway Details No. 1
S-17	Overhead Signs, Walkway Details No. 2
S-18	Overhead Signs, Walkway Safety Railing Details
S-19	Overhead Signs-Truss, Sign Mounting Details, Laminated Panel-Type A
S-20	Overhead Signs, Steel Frames, Removable Sign Panel Frames
S-21	Overhead Signs, Removable Sign Panel Frames, Mounting Details
S-22	Overhead Signs-Truss, Removable Sign Panel Frames, 2794 mm and 3048 mm Sign Panels

WALKWAY BRACKETS:

Space all walkway brackets maintaining uniform spacing where possible. Maximum spacing shall not exceed 1676 mm.

LIGHTING FIXTURE SUPPORTS:

Where distance from walkway bracket to end of sign panel exceeds 406 mm, extend lighting fixture supports to next walkway bracket. See Example No. 2.

WALKWAY AND SAFETY RAILING:

Walkway to be continuous for entire length of frame for single post signs. For two post signs, see Project Plans. Safety railing to protect entire walkway, but continuous for no more than 3353 mm in one unit.

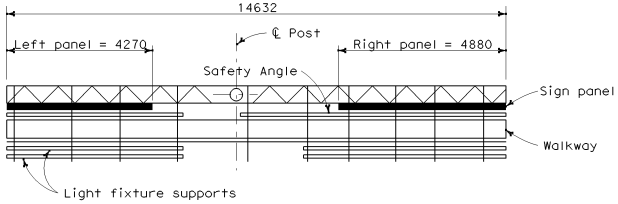

PLAN

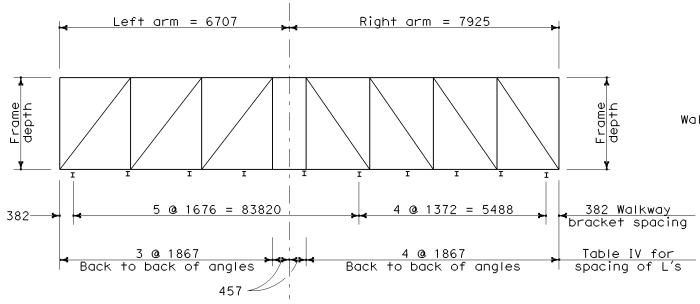

UNBALANCED SINGLE POST TYPE

Example No. 1

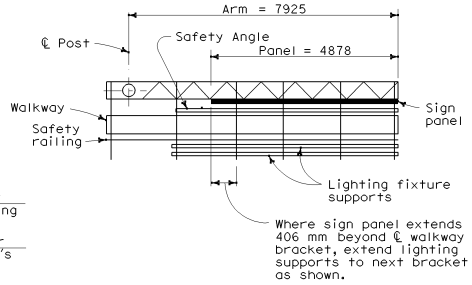

PLAN

CANTILEVER SINGLE POST TYPE

Example No. 2

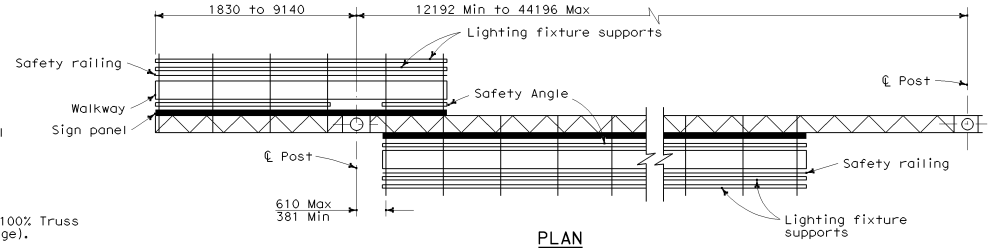

PLAN

TWO POST TYPE WITH CANTILEVER (PART DOUBLE-FACED)

Example No. 3

GENERAL NOTES

DESIGN:

AASHTO Specifications for Structural Supports for Highway Signs, Luminaires and Traffic Signals, dated 2001.

CONSTRUCTION:

Standard Specifications and the Special Provisions.

LOADING:

WIND LOADING:

Normal to face of sign: 1930 Pa on 100% Truss surface area (i.e. 100% panel coverage).

Transverse to face of sign: 20% of normal force.

WALKWAY LOADING:

Dead load +229 kg concentrated live load.

UNIT STRESSES:

STRUCTURAL STEEL: fy = 248 MPa
REINFORCED CONCRETE: fy = 248 MPa
f'c = 25 MPa

FOOTING SOIL PRESSURE: 120 kPa (spread footing)

MINIMUM CLEARANCE

Vertical roadway clearance 5490 mm.

WELDING:

All welding continuous unless otherwise noted on the plans. All welding to be done in accordance with the Standard Specifications.

Standard Plan Sheet No.

Detail No.

NOTE

Signs are shown and dimensioned looking in the direction of traffic. Double faced signs are shown and dimensioned looking ahead along stationing.

Caltrans Metric

DIST	COUNTY	ROUTE	KILOMETER POST TOTAL PROJECT	SHEET NO.	TOTAL SHEETS

REGISTERED CIVIL ENGINEER

July 1, 2004
PLANS APPROVAL DATE

REGISTERED PROFESSIONAL ENGINEER Tiliat Sattar No. C42892 Exp. 03-31-2006 CIVIL STATE OF CALIFORNIA

The State of California or its officers or agents shall not be responsible for the accuracy or completeness of electronic copies of this plan sheet.

To get to the Caltrans web site, go to: http://www.dot.ca.gov

STATE OF CALIFORNIA
DEPARTMENT OF TRANSPORTATION

OVERHEAD SIGNS-TRUSS INSTRUCTIONS AND EXAMPLES

NO SCALE

ALL DIMENSIONS ARE IN MILLIMETERS UNLESS OTHERWISE SHOWN

S1

2004 Std PLAN S1

07-29-04

Back to Table of Contents

DIST	COUNTY	ROUTE	KILOMETER POST TOTAL PROJECT	SHEET NO.	TOTAL SHEETS

REGISTERED CIVIL ENGINEER

July 1, 2004
PLANS APPROVAL DATE

REGISTERED PROFESSIONAL ENGINEER Tiliat Sattar No. C42892 Exp. 03-31-2006 CIVIL STATE OF CALIFORNIA

The State of California or its officers or agents shall not be responsible for the accuracy or completeness of electronic copies of this plan sheet.

To get to the Caltrans web site, go to: http://www.dot.ca.gov

Caltrans Metric

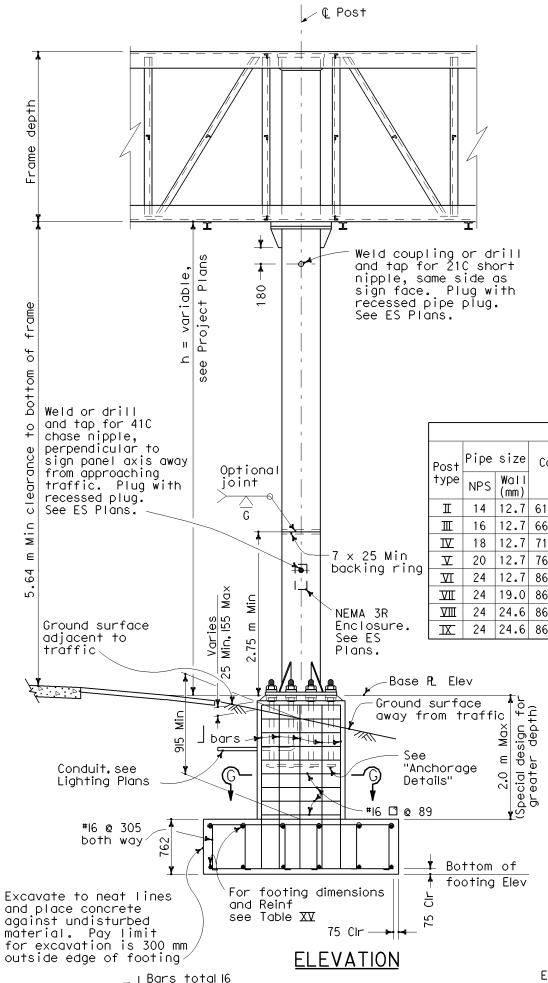

ELEVATION

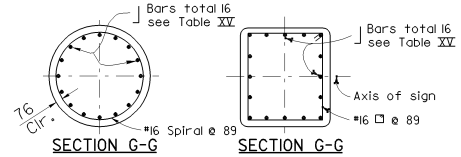

SECTION G-G
ROUND PEDESTAL

SECTION G-G
RECTANGLE PEDESTAL

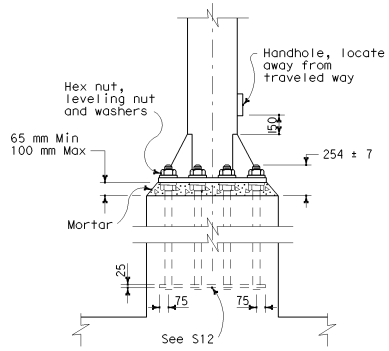

ANCHORAGE DETAILS

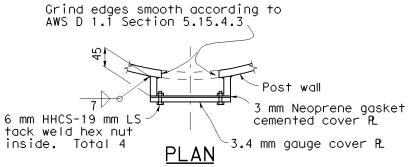

PLAN

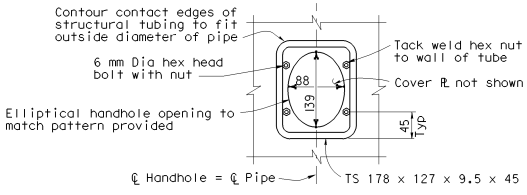

ELEVATION

TYPICAL DETAILS OF HANDHOLE AND COVER

TABLE XV

Post type	Pipe size NPS	Pipe size Wall (mm)	Cap Plate for L 127x127 (mm)	Cap Plate for L 152x152 (mm)	Round Pedestal: Pedestal Size Dia (mm)	Round Pedestal: Pedestal Size Depth (mm)	Round Pedestal: Vertical J-Bars Equally spaced total	Round Pedestal: Vertical J-Bars Bar Size	Round Pedestal: Vertical J-Bars Bar B.C. (mm)	Round Pedestal: Spiral Bar Size	Round Pedestal: Spiral Pitch (mm)	Square Pedestal: Pedestal Size Square (mm)	Square Pedestal: Pedestal Size Depth (mm)	Square Pedestal: Vertical J-Bars Equally spaced total	Square Pedestal: Vertical J-Bars Bar Size	Square Pedestal: Vertical J-Bars Spacing ea face (mm)	Square Pedestal: Hoop Bar Size	Square Pedestal: Hoop Spacing (mm)	Pile footing Dia (mm)	Pile footing Depth (mm)	Alternate: Spread Footing See note 2 (mm)	Alternate: Spread Footing Reinforcement: Width Top	Alternate: Spread Footing Reinforcement: Width Bottom	Alternate: Spread Footing Reinforcement: Longitudinal Top	Alternate: Spread Footing Reinforcement: Longitudinal Bottom	Alternate: Spread Footing Reinforcement: Footing Stirrups
II	14	12.7	610 x 610 x 25	660 x 660 x 25	1600	1981	16	32	1372	16	89	1600	1981	16	32	346	16	89	1372	4.5	3658 x 4267 x 762	14-#19	14-#22	13-#29	13-#29	#16 @ 305
III	16	12.7	660 x 660 x 25	711 x 711 x 25	1600	1981	16	32	1372	16	89	1600	1981	16	32	346	16	89	1372	4.9	3658 x 4267 x 762	15-#19	15-#22	13-#29	13-#29	#16 @ 305
IV	18	12.7	711 x 711 x 25	762 x 762 x 25	1600	1981	16	32	1372	16	89	1600	1981	16	32	346	16	89	1372	5.5	3658 x 4267 x 762	15-#19	15-#22	13-#29	13-#29	#16 @ 305
V	20	12.7	762 x 762 x 25	813 x 813 x 25	1600	1981	16	32	1372	16	89	1600	1981	16	32	346	16	89	1372	5.8	3962 x 4267 x 762	15-#19	15-#22	14-#29	14-#29	#16 @ 305
VI	24	12.7	864 x 864 x 25	914 x 914 x 25	1753	1981	16	36	1534	16	89	1753	1981	16	36	381	16	89	1524	6.7	3962 x 4877 x 762	17-#22	17-#22	14-#29	14-#36	#16 @ 305
VII	24	19.0	864 x 864 x 25	914 x 914 x 25	1753	1981	16	36	1534	16	89	1753	1981	16	36	381	16	89	1524	7.0	3962 x 5182 x 762	18-#22	18-#22	14-#29	14-#36	#16 @ 305
VIII	24	24.6	864 x 864 x 25	914 x 914 x 25	1753	1981	16	36	1534	16	89	1753	1981	16	36	381	16	89	1524	7.6	3962 x 5486 x 762	19-#22	19-#22	14-#29	14-#36	#16 @ 305
IX	24	24.6	864 x 864 x 25	914 x 914 x 25	1753	1981	16	36	1534	16	89	1753	1981	16	36	381	16	89	1524	7.6	3962 x 5486 x 762	19-#22	19-#22	14-#29	14-#36	#16 @ 305

Notes:

1. For "General Notes" see Standard Plan S1.
2. Longer sides of pedestals and footing shall be normal to axis of sign.
3. Backfill shall be in place prior to erection of post.
4. Thread upper 254 mm of anchor bolts and galvanize upper 305 mm.
5. Spread footing shown, use Pile Foundation when shown on the Project Plans.
6. Anchor plates may be retained with hexagon nut or formed head as alternatives to details shown.
7. On single post sign structures, the post shall be raked out of plumb, with the use of the leveling nuts to make the bottom of the sign frame level.
8. At final position of post all top and bottom nuts shall be tightened against base plate.
9. When foundation is location on a steep slope with exposed face of concrete adjacent ot traffic, see "Detail C" on Standard Plan S7.
10. Slope protection required when indicated on the Project Plans.

STATE OF CALIFORNIA
DEPARTMENT OF TRANSPORTATION

OVERHEAD SIGNS-TRUSS SINGLE POST TYPE POST TYPES II THROUGH IX

NO SCALE

ALL DIMENSIONS ARE IN MILLIMETERS UNLESS OTHERWISE SHOWN

S2

2004 Std PLAN S2

08-02-04

Back to Table of Contents

DIST	COUNTY	ROUTE	KILOMETER POST TOTAL PROJECT	SHEET NO.	TOTAL SHEETS

Caltrans Metric

REGISTERED CIVIL ENGINEER

July 1, 2004
PLANS APPROVAL DATE

REGISTERED PROFESSIONAL ENGINEER Tiliat Sattar NO. C42892 Exp. 03-31-2006 CIVIL STATE OF CALIFORNIA

The State of California or its officers or agents shall not be responsible for the accuracy or completeness of electronic copies of this plan sheet.

To get to the Caltrans web site, go to: http://www.dot.ca.gov

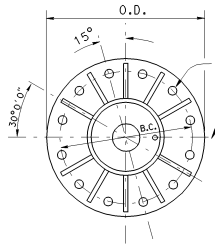

12 BOLTS

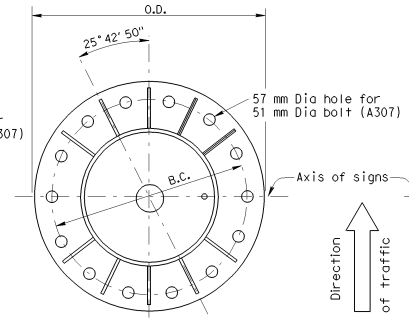

14 BOLTS

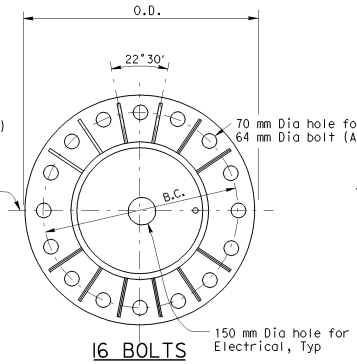

16 BOLTS

SINGLE POST TYPE BASE PLATE DETAILS

Post Type No.	Nominal Pipe Size (NPS)	Pipe Thickness (mm)	Base ℄ OD & Thickness (mm)	Anchor: Bolt Circle (mm)	Anchor: Bolts Total & Dia (mm)	Pile Dia (mm)	Pile Depth (m)	CIDH Vertical Reinforcing: Total	CIDH Vertical Reinforcing: Bar Size	CIDH Vertical Reinforcing: Bar Circle (mm)	CIDH Spiral: Bar Size	CIDH Spiral: Pitch (mm)
II	14	12.7	864 x 51	711	12-51	1372	4.5	26	32	1143	16	89
III	16	12.7	864 x 51	711	12-51	1372	4.9	26	32	1143	16	89
IV	18	12.7	864 x 51	711	12-51	1372	5.5	26	32	1143	16	89
V	20	12.7	864 x 51	711	14-51	1372	5.8	26	32	1143	16	89
VI	24	12.7	1016 x 64	864	16-64	1524	6.7	28	36	1295	16	89
VII	24	19.0	1016 x 64	864	16-64	1524	7.0	28	36	1295	16	89
VIII	24	24.6	1016 x 89	864	16-64	1524	7.6	28	36	1295	16	89
IX	24	24.6	1016 x 89	864	16-64	1524	7.6	28	36	1295	16	89

SINGLE POST TABLE

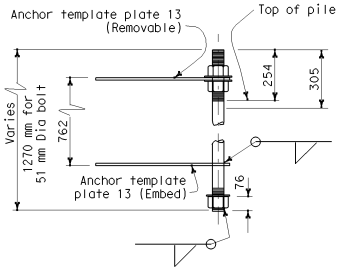

FOR POST II THRU V
12 BOLTS PATTERN

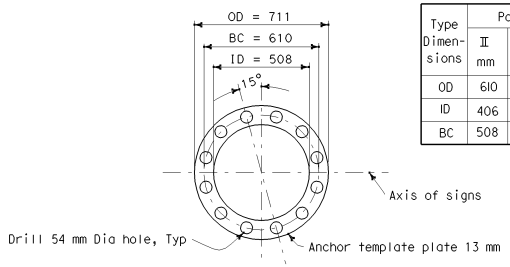

Type Dimensions	Post Type No. II mm	III mm	IV mm	V mm
OD	610	660	711	762
ID	406	457	508	559
BC	508	559	610	660

12 BOLTS
Type IV shown

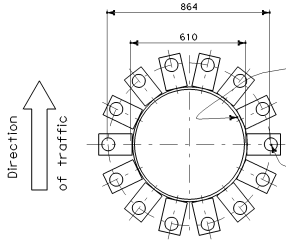

14 BOLTS

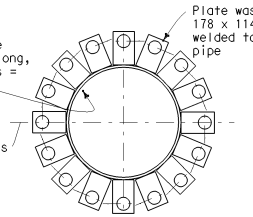

16 BOLTS

ANCHOR BOLT TEMPLATE
Template to match base plate anchor bolt layouts

(Option: Plate washer can be substitute by one ring plate shown in 12 bolts template)

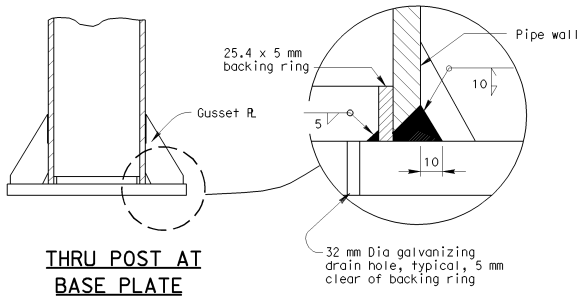

THRU POST AT
BASE PLATE

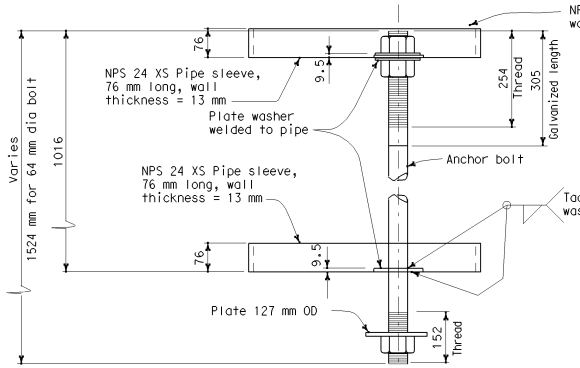

ANCHOR BOLT TEMPLATE ASSEMBLY DETAIL
Note: One bolt shown only other bolts not shown.

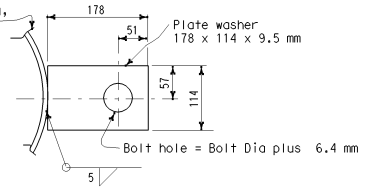

PLATE WASHER FOR 14 & 16 BOLT PATTERN

STATE OF CALIFORNIA
DEPARTMENT OF TRANSPORTATION

OVERHEAD SIGNS-TRUSS SINGLE POST TYPE BASE PLATE AND ANCHORAGE DETAILS

NO SCALE

ALL DIMENSIONS ARE IN MILLIMETERS UNLESS OTHERWISE SHOWN

S3

08-05-04

Back to Table of Contents

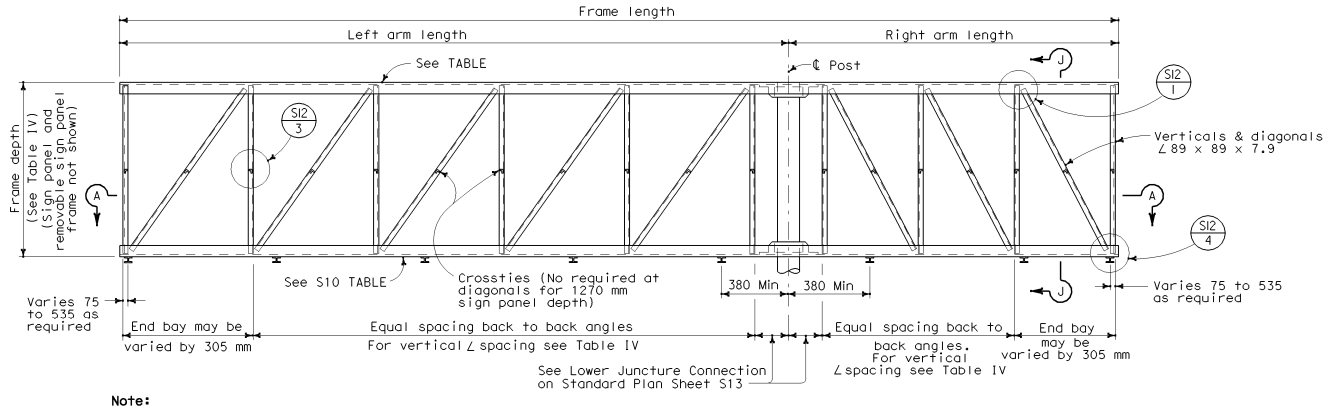

Note:

Left arm may be shorter, longer or equal to right arm length

ELEVATION

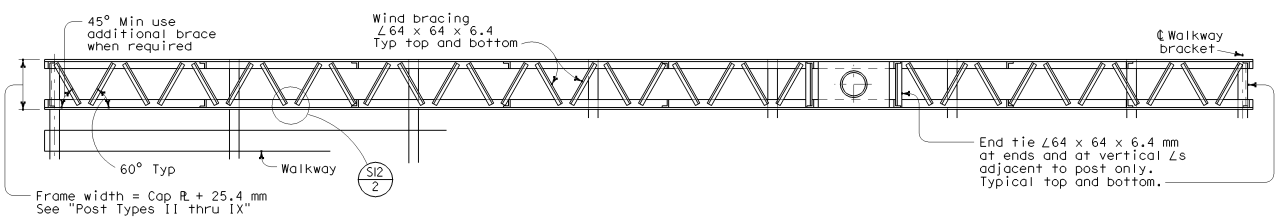

SECTION A-A

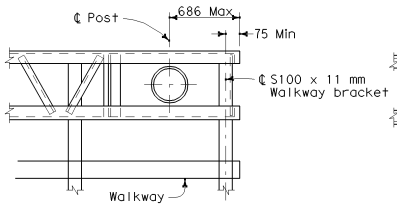

PART PLAN OF CANTILEVER TYPE AT POST

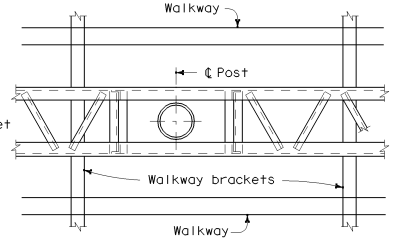

PART PLAN OF DOUBLE FACED TYPE AT POST

Notes:

1. For connection of frame to post see S13.
2. For walkway see S16 and S17.
3. For walkway length see S1.
4. Minimum length of frame = 3660 mm.
5. Maximum length of frame = 18 290 mm.
6. Diagonal not required if arm length is equal to or less than shown in this column see table IV.

Standard Plan sheet number
Detail number

Caltrans Metric

DIST	COUNTY	ROUTE	KILOMETER POST TOTAL PROJECT	SHEET NO.	TOTAL SHEETS

REGISTERED ~~CIVIL~~ ENGINEER

July 1, 2004
PLANS APPROVAL DATE

REGISTERED PROFESSIONAL ENGINEER Tillat Sattar No. C42892 Exp. 03-31-2006 CIVIL STATE OF CALIFORNIA

The State of California or its officers or agents shall not be responsible for the accuracy or completeness of electronic copies of this plan sheet.

To get to the Caltrans web site, go to: http://www.dot.ca.gov

TABLE IV

Sign Panel Depth (mm)	Frame Depth (mm)	Maximum Vertical ∠ Spacing (mm)	See Note 6 (mm)
1270	1423	1372	1220
1524	1675	1524	1220
1778	1931	1676	1220
2032	2185	1829	1525
2286	2439	2134	1525
2540	2693	2134	1830
2794	2693	2134	1830
3048	2693	2134	1830

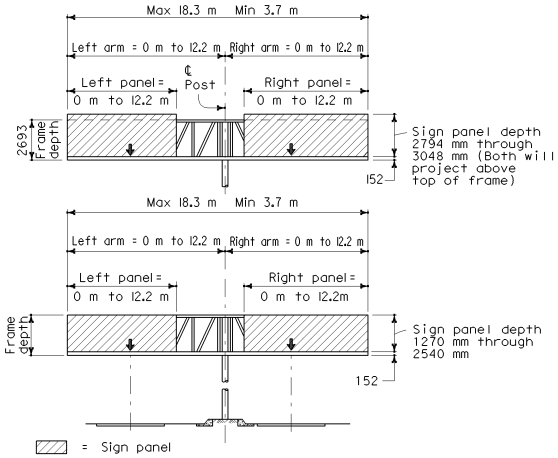

RANGE OF STRUCTURE SIZES

STATE OF CALIFORNIA
DEPARTMENT OF TRANSPORTATION

OVERHEAD SIGNS-TRUSS SINGLE POST TYPE STRUCTURAL FRAME MEMBERS DETAILS No.1

NO SCALE

ALL DIMENSIONS ARE IN MILLIMETERS UNLESS OTHERWISE SHOWN

S4

07-30-04

Back to Table of Contents

Span $L_1 + L_2$ (m)	1270 mm Sign Panel Depth					
	Frame Depth	Frame Width	Chord L	Vertical L	Diagonal L	Top & Bottom Wind Bracing
3.66	1.42 m	See Note	L127x127x12.7	L89x89x7.9	L89x89x7.9	L64x64x6.4
4.0 to 6.1	1.42 m	See Note	L127x127x12.7	L89x89x7.9	L89x89x7.9	L64x64x6.4
6.4 to 9.1	1.42 m	See Note	L127x127x12.7	L89x89x7.9	L89x89x7.9	L64x64x6.4
9.4 to 12.2	1.42 m	See Note	L152x152x12.7	L89x89x7.9	L89x89x7.9	L64x64x6.4
12.4 to 15.2	1.42 m	See Note	L152x152x12.7	L89x89x7.9	L89x89x7.9	L64x64x6.4
15.5 to 18.3	1.42 m	See Note	L152x152x12.7	L89x89x7.9	L89x89x7.9	L64x64x6.4

Span $L_1 + L_2$ (m)	1524 mm Sign Panel Depth					
	Frame Depth	Frame Width	Chord L	Vertical L	Diagonal L	Top & Bottom Wind Bracing
3.66	1.68 m	See Note	L127x127x12.7	L89x89x7.9	L89x89x7.9	L64x64x6.4
4.0 to 6.1	1.68 m	See Note	L127x127x12.7	L89x89x7.9	L89x89x7.9	L64x64x6.4
6.4 to 9.1	1.68 m	See Note	L127x127x12.7	L89x89x7.9	L89x89x7.9	L64x64x6.4
9.4 to 12.2	1.68 m	See Note	L152x152x12.7	L89x89x7.9	L89x89x7.9	L64x64x6.4
12.4 to 15.2	1.68 m	See Note	L152x152x12.7	L89x89x7.9	L89x89x7.9	L64x64x6.4
15.5 to 18.3	1.68 m	See Note	L152x152x12.7	L89x89x7.9	L89x89x7.9	L64x64x6.4

Span $L_1 + L_2$ (m)	1778 mm Sign Panel Depth					
	Frame Depth	Frame Width	Chord L	Vertical L	Diagonal L	Top & Bottom Wind Bracing
3.66	1.93 m	See Note	L127x127x12.7	L89x89x7.9	L89x89x7.9	L64x64x6.4
4.0 to 6.1	1.93 m	See Note	L127x127x12.7	L89x89x7.9	L89x89x7.9	L64x64x6.4
6.4 to 9.1	1.93 m	See Note	L127x127x12.7	L89x89x7.9	L89x89x7.9	L64x64x6.4
9.4 to 12.2	1.93 m	See Note	L152x152x12.7	L89x89x7.9	L89x89x7.9	L64x64x6.4
12.4 to 15.2	1.93 m	See Note	L152x152x12.7	L89x89x7.9	L89x89x7.9	L64x64x6.4
15.5 to 18.3	1.93 m	See Note	L152x152x12.7	L89x89x7.9	L89x89x7.9	L64x64x6.4

Span $L_1 + L_2$ (m)	2032 mm Sign Panel Depth					
	Frame Depth	Frame Width	Chord L	Vertical L	Diagonal L	Top & Bottom Wind Bracing
3.66	2.18 m	See Note	L127x127x12.7	L89x89x7.9	L89x89x7.9	L64x64x6.4
4.0 to 6.1	2.18 m	See Note	L127x127x12.7	L89x89x7.9	L89x89x7.9	L64x64x6.4
6.4 to 9.1	2.18 m	See Note	L127x127x12.7	L89x89x7.9	L89x89x7.9	L64x64x6.4
9.4 to 12.2	2.18 m	See Note	L152x152x12.7	L89x89x7.9	L89x89x7.9	L64x64x6.4
12.4 to 15.2	2.18 m	See Note	L152x152x12.7	L89x89x7.9	L89x89x7.9	L64x64x6.4
15.5 to 18.3	2.18 m	See Note	L152x152x12.7	L89x89x7.9	L89x89x7.9	L64x64x6.4

Span $L_1 + L_2$ (m)	2286 mm Sign Panel Depth					
	Frame Depth	Frame Width	Chord L	Vertical L	Diagonal L	Top & Bottom Wind Bracing
3.66	2.44 m	See Note	L127x127x12.7	L89x89x7.9	L89x89x7.9	L64x64x6.4
4.0 to 6.1	2.44 m	See Note	L127x127x12.7	L89x89x7.9	L89x89x7.9	L64x64x6.4
6.4 to 9.1	2.44 m	See Note	L127x127x12.7	L89x89x7.9	L89x89x7.9	L64x64x6.4
9.4 to 12.2	2.44 m	See Note	L152x152x12.7	L89x89x7.9	L89x89x7.9	L64x64x6.4
12.4 to 15.2	2.44 m	See Note	L152x152x12.7	L89x89x7.9	L89x89x7.9	L64x64x6.4
15.5 to 18.3	2.44 m	See Note	L152x152x12.7	L89x89x7.9	L89x89x7.9	L64x64x6.4

Span $L_1 + L_2$ (m)	2540 mm Sign Panel Depth					
	Frame Depth	Frame Width	Chord L	Vertical L	Diagonal L	Top & Bottom Wind Bracing
3.66	2.70 m	See Note	L127x127x12.7	L89x89x7.9	L89x89x7.9	L64x64x6.4
4.0 to 6.1	2.70 m	See Note	L127x127x12.7	L89x89x7.9	L89x89x7.9	L64x64x6.4
6.4 to 9.1	2.70 m	See Note	L127x127x12.7	L89x89x7.9	L89x89x7.9	L64x64x6.4
9.4 to 12.2	2.70 m	See Note	L152x152x12.7	L89x89x7.9	L89x89x7.9	L64x64x6.4
12.4 to 15.2	2.70 m	See Note	L152x152x12.7	L89x89x7.9	L89x89x7.9	L64x64x6.4
15.5 to 18.3	2.70 m	See Note	L152x152x12.7	L89x89x7.9	L89x89x7.9	L64x64x6.4

Span $L_1 + L_2$ (m)	2794 mm Sign Panel Depth					
	Frame Depth	Frame Width	Chord L	Vertical L	Diagonal L	Top & Bottom Wind Bracing
3.66	2.70 m	See Note	L127x127x12.7	L89x89x7.9	L89x89x7.9	L64x64x6.4
4.0 to 6.1	2.70 m	See Note	L127x127x12.7	L89x89x7.9	L89x89x7.9	L64x64x6.4
6.4 to 9.1	2.70 m	See Note	L127x127x12.7	L89x89x7.9	L89x89x7.9	L64x64x6.4
9.4 to 12.2	2.70 m	See Note	L152x152x12.7	L89x89x7.9	L89x89x7.9	L64x64x6.4
12.4 to 15.2	2.70 m	See Note	L152x152x12.7	L89x89x7.9	L89x89x7.9	L64x64x6.4
15.5 to 18.3	2.70 m	See Note	L152x152x12.7	L89x89x7.9	L89x89x7.9	L64x64x6.4

Span $L_1 + L_2$ (m)	3048 mm Sign Panel Depth					
	Frame Depth	Frame Width	Chord L	Vertical L	Diagonal L	Top & Bottom Wind Bracing
3.66	2.70 m	See Note	L127x127x12.7	L89x89x7.9	L89x89x7.9	L64x64x6.4
4.0 to 6.1	2.70 m	See Note	L127x127x12.7	L89x89x7.9	L89x89x7.9	L64x64x6.4
6.4 to 9.1	2.70 m	See Note	L127x127x12.7	L89x89x7.9	L89x89x7.9	L64x64x6.4
9.4 to 12.2	2.70 m	See Note	L152x152x12.7	L89x89x7.9	L89x89x7.9	L64x64x6.4
12.4 to 15.2	2.70 m	See Note	L152x152x12.7	L89x89x7.9	L89x89x7.9	L64x64x6.4
15.5 to 18.3	2.70 m	See Note	L152x152x12.7	L89x89x7.9	L89x89x7.9	L64x64x6.4

Notes:

1. Frame width = Pipe Dia plus 2 x shorter L leg plus 25.4 mm.
2. Frame length L_1 = Left arm length
3. Frame length L_2 = right arm length

Caltrans Metric

DIST	COUNTY	ROUTE	KILOMETER POST TOTAL PROJECT	SHEET NO.	TOTAL SHEETS

REGISTERED ~~CIVIL~~ ENGINEER

July 1, 2004
PLANS APPROVAL DATE

REGISTERED PROFESSIONAL ENGINEER
Tiliat Sattar
No. C42892
Exp. 03-31-2006
CIVIL
STATE OF CALIFORNIA

The State of California or its officers or agents shall not be responsible for the accuracy or completeness of electronic copies of this plan sheet.

To get to the Caltrans web site, go to: http://www.dot.ca.gov

STATE OF CALIFORNIA
DEPARTMENT OF TRANSPORTATION

OVERHEAD SIGNS-TRUSS SINGLE POST TYPE STRUCTURAL FRAME MEMBERS DETAILS No.2

NO SCALE

ALL DIMENSIONS ARE IN MILLIMETERS UNLESS OTHERWISE SHOWN

S5

2004 Std PLAN S5

07-30-04

Back to Table of Contents

DIST	COUNTY	ROUTE	KILOMETER POST TOTAL PROJECT	SHEET NO.	TOTAL SHEETS

Caltrans Metric

REGISTERED CIVIL ENGINEER

July 1, 2004
PLANS APPROVAL DATE

REGISTERED PROFESSIONAL ENGINEER Tillat Sattar No. C42892 Exp. 03-31-2006 CIVIL STATE OF CALIFORNIA

The State of California or its officers or agents shall not be responsible for the accuracy or completeness of electronic copies of this plan sheet.

To get to the Caltrans web site, go to: http://www.dot.ca.gov

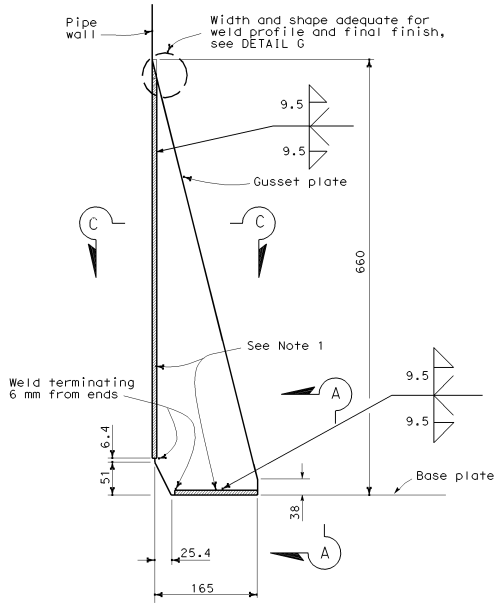

WELD DETAILS

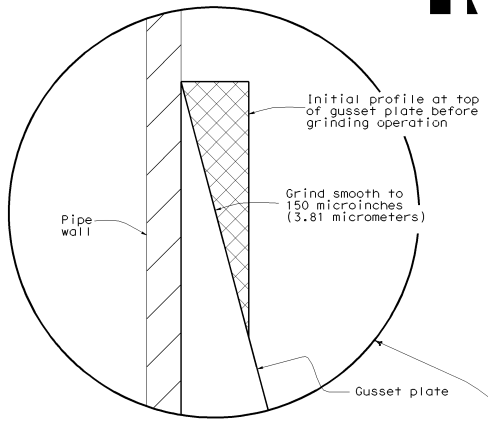

DETAIL G

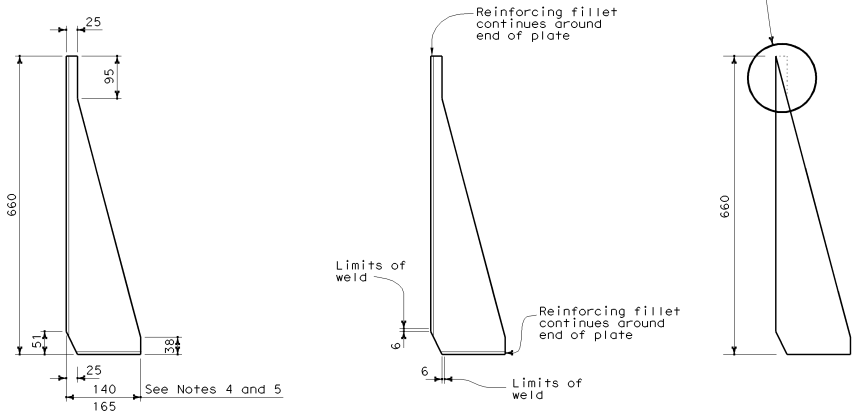

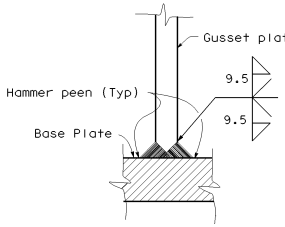

SECTION A-A

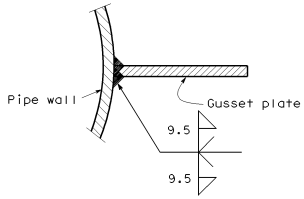

SECTION C-C

NOTES

1. All welding details shall conform to the requirements of AWS D1.1 and special provisions.
2. All gussets to be same height.
3. Provide a smooth transition from gusset plate to tube.
4. 140 mm for post Types I-S through V-S and single post with 12 and 14 bolts pattern.
5. 165 mm for post Type VI-S and VII-S and single post with 16 bolts pattern.

STATE OF CALIFORNIA
DEPARTMENT OF TRANSPORTATION

OVERHEAD SIGNS-TRUSS GUSSET PLATE DETAILS

NO SCALE

ALL DIMENSIONS ARE IN MILLIMETERS UNLESS OTHERWISE SHOWN

S6

07-30-04

Back to Table of Contents

DIST	COUNTY	ROUTE	KILOMETER POST TOTAL PROJECT	SHEET NO.	TOTAL SHEETS

Caltrans Metric

REGISTERED CIVIL ENGINEER

July 1, 2004
PLANS APPROVAL DATE

REGISTERED PROFESSIONAL ENGINEER Tiliat Sattar No. C42892 Exp. 03-31-2006 CIVIL STATE OF CALIFORNIA

The State of California or its officers or agents shall not be responsible for the accuracy or completeness of electronic copies of this plan sheet.

To get to the Caltrans web site, go to: http://www.dot.ca.gov

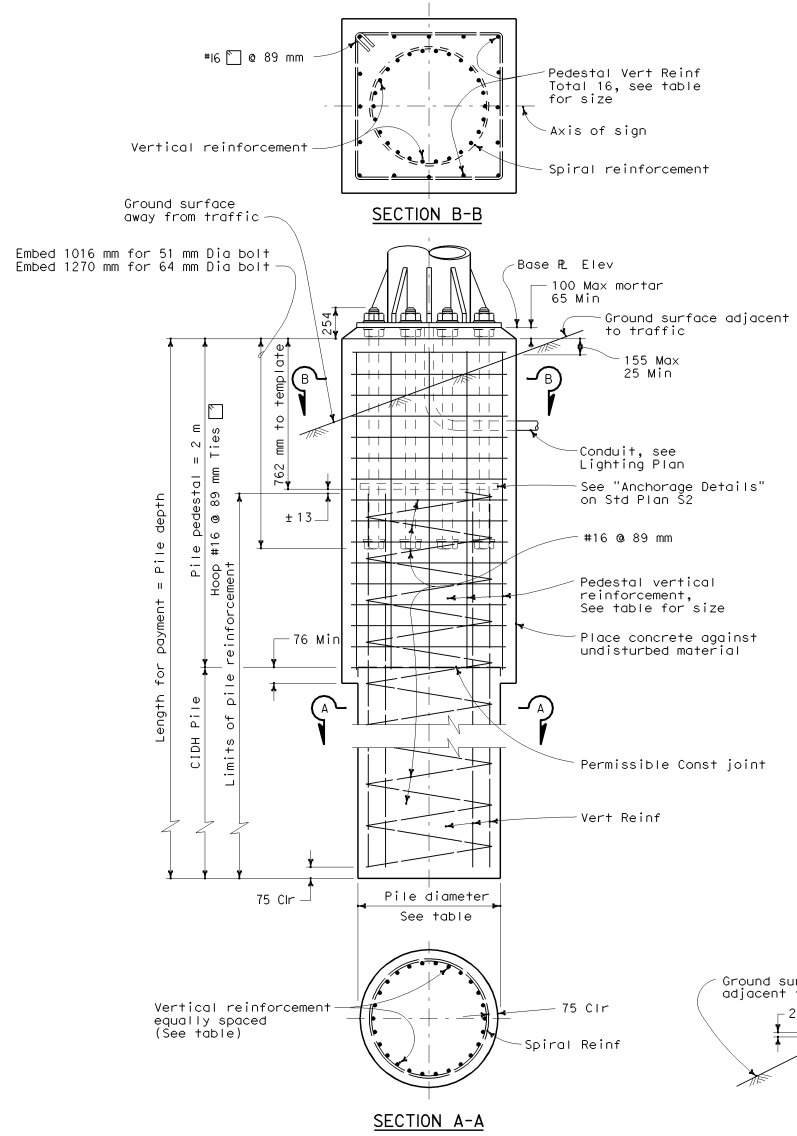

Post Type No.	Anchor Bolts: Bolt Circle (mm)	Anchor Bolts: Bolts Total & Dia (mm)	Anchor Bolts: Total Length (mm)	Square Pedestal: Pedestal Square one side (mm)	Square Pedestal: Pedestal Depth (mm)	Square Pedestal: Reinforcing: Total	Square Pedestal: Reinforcing: Bar Size	Square Pedestal: Reinforcing: # of bars each face	Square Pedestal: Hoop: Bar Size	Square Pedestal: Hoop: Pitch (mm)	CIDH: Pile Dia (mm)	CIDH: ** Pile Depth (m)	CIDH: Vertical Reinforcing: Total	CIDH: Vertical Reinforcing: Bar Size	CIDH: Vertical Reinforcing: Bar Circle (mm)	CIDH: Spiral: Bar Size	CIDH: Spiral: Pitch (mm)
II	711	12-51	1270	1600	1981	16	#32	5	#16	89	1372	4.5	26	#32	1143	#16	89
III	711	12-51	1270	1600	1981	16	#32	5	#16	89	1372	4.9	26	#32	1143	#16	89
IV	711	12-51	1270	1600	1981	16	#32	5	#16	89	1372	5.5	26	#32	1143	#16	89
V	711	14-51	1270	1600	1981	16	#32	5	#16	89	1372	5.8	26	#32	1143	#16	89
VI	864	16-63.5	1524	1753	1981	16	#36	5	#16	89	1524	6.7	28	#36	1295	#16	89
VII	864	16-63.5	1524	1753	1981	16	#36	5	#16	89	1524	7.0	28	#36	1295	#16	89
VIII	864	16-63.5	1524	1753	1981	16	#36	5	#16	89	1524	7.6	28	#36	1295	#16	89
IX	864	16-63.5	1524	1753	1981	16	#36	5	#16	89	1524	7.6	28	#36	1295	#16	89

** Use Foundation Depth shown in table unless otherwise shown on the Project Plans.

NOTES

1. For anchor bolt layout see post sheet.
2. For "Base ℄ elevation" see Project Plans.
3. Prior to erection of the post, backfill which is equivalent to the surrounding material shall be in place.
4. Pedestal shall be formed 150 mm minimum below ground surface Remainder to be placed against undisturbed material.
5. Slope protection required when indicated on the Project Plans.
6. Foundation design is based on 2001 ASSHTO article 13.6 Broms' approximate procedure assuming a cohesionless material. The angle of internal friction Dia used 30 degree and unit weight of soil used is 1922 kg/m³.

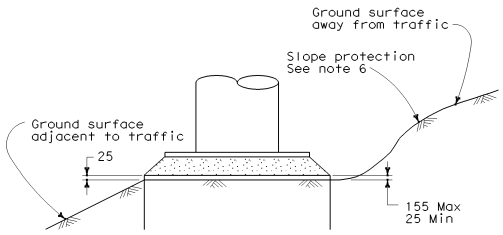

DETAIL C

STATE OF CALIFORNIA
DEPARTMENT OF TRANSPORTATION

OVERHEAD SIGNS-TRUSS SINGLE POST TYPE SQUARE PEDESTAL FOUNDATION

NO SCALE

ALL DIMENSIONS ARE IN MILLIMETERS UNLESS OTHERWISE SHOWN

S7

08-05-04

Back to Table of Contents

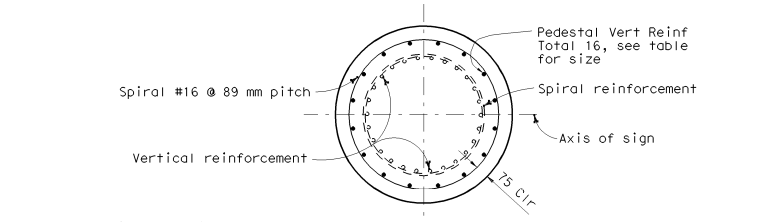

SECTION B-B

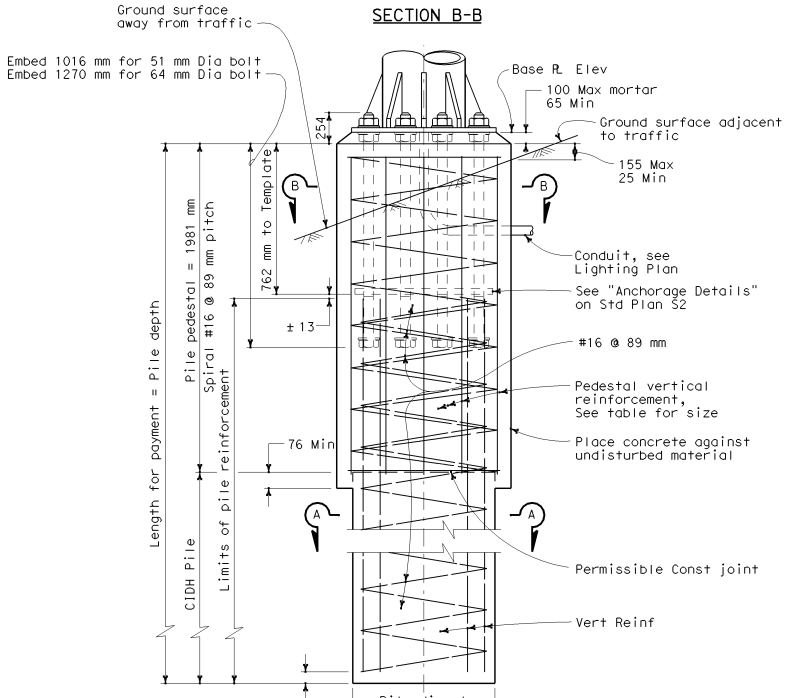

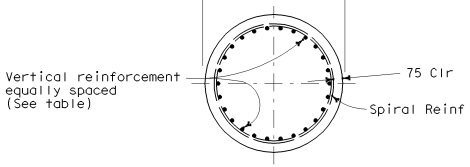

SECTION A-A

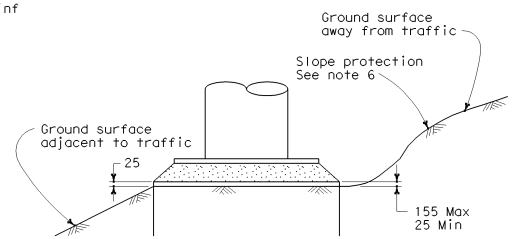

DETAIL C

Post Type No.	Anchor Bolts: Bolt Circle (mm)	Anchor Bolts: Bolts Total & Dia (mm)	Round Pedestal: Total Length (mm)	Round Pedestal: Dia (mm)	Round Pedestal: Depth (mm)	Round Pedestal: Reinforcing: Total	Round Pedestal: Reinforcing: Bar Size	Round Pedestal: Reinforcing: Loop Circle (mm)	Round Pedestal: Spiral: Bar Size	Round Pedestal: Spiral: Pitch (mm)	CIDH: Pile Dia (mm)	CIDH: ** Pile Depth (m)	CIDH: Vertical Reinforcing: Total	CIDH: Vertical Reinforcing: Bar Size	CIDH: Vertical Reinforcing: Bar Circle (mm)	CIDH: Spiral: Bar Size	CIDH: Spiral: Pitch (mm)
II	711	12-51	1270	1600	1981	16	#32	1435	#16	89	1372	4.5	26	#32	1143	#16	89
III	711	12-51	1270	1600	1981	16	#32	1435	#16	89	1372	4.9	26	#32	1143	#16	89
IV	711	12-51	1270	1600	1981	16	#32	1435	#16	89	1372	5.5	26	#32	1143	#16	89
V	711	14-51	1270	1600	1981	16	#32	1435	#16	89	1372	5.8	26	#32	1143	#16	89
VI	864	16-63.5	1524	1753	1981	16	#36	1581	#16	89	1524	6.7	28	#36	1295	#16	89
VII	864	16-63.5	1524	1753	1981	16	#36	1581	#16	89	1524	7.0	28	#36	1295	#16	89
VIII	864	16-63.5	1524	1753	1981	16	#36	1581	#16	89	1524	7.6	28	#36	1295	#16	89
IX	864	16-63.5	1524	1753	1981	16	#36	1581	#16	89	1524	7.6	28	#36	1295	#16	89

** Use Foundation Depth shown in table unless otherwise shown on the Project Plans.

NOTES

1. For anchor bolt layout see post sheet.
2. For "Base ℞ elevation" see Project Plans.
3. Prior to erection of the post, backfill which is equivalent to the surrounding material shall be in place.
4. Pedestal shall be formed 150 mm minimum below ground surface Remainder to be placed against undisturbed material.
5. Slope protection required when indicated on the Project Plans.
6. Foundation design is based on 2001 ASSHTO article 13.6 Broms' approximate procedure assuming a cohesionless material. The angle of internal friction Dia used 30 degree and unit weight of soil used is 1922 kg/m^3.

Caltrans Metric

DIST	COUNTY	ROUTE	KILOMETER POST TOTAL PROJECT	SHEET NO.	TOTAL SHEETS

REGISTERED CIVIL ENGINEER

July 1, 2004
PLANS APPROVAL DATE

REGISTERED PROFESSIONAL ENGINEER Tilak Sattar No. C42892 Exp. 03-31-2006 CIVIL STATE OF CALIFORNIA

The State of California or its officers or agents shall not be responsible for the accuracy or completeness of electronic copies of this plan sheet.

To get to the Caltrans web site, go to: http://www.dot.ca.gov

STATE OF CALIFORNIA
DEPARTMENT OF TRANSPORTATION

OVERHEAD SIGNS-TRUSS SINGLE POST TYPE ROUND PEDESTAL FOUNDATION

NO SCALE

ALL DIMENSIONS ARE IN MILLIMETERS UNLESS OTHERWISE SHOWN

S8

08-05-04

Back to Table of Contents

TABLE XV																
Post Type	Pipe size			Square dedestal size shown		Pedestal Vertical J-Bars			Spiral		Spread Footing See note 2 (mm)	Spread Footing Reinforcement				
												Width		Longitudinal		Footing Stirrups
	NPS	"t" (mm)	Split (mm)	Width (mm)	Depth (mm)	Equally spaced total	Bar Size	Bar B.C. (mm)	Bar Size	Pitch (mm)		Top	Bottom	Top	Bottom	
I-S	14	12.7	127	1600	1524	26	32	1206	16	89	2134 x 3962 x 762	14-#19	14-#22	10-#29	10-#29	#16 @ 305
II-S	16	12.7	152	1600	1524	26	32	1206	16	89	2134 x 3962 x 762	14-#19	14-#22	10-#29	10-#29	#16 @ 305
III-S	18	12.7	178	1600	1524	26	32	1206	16	89	2134 x 3962 x 762	14-#19	14-#22	11-#29	11-#29	#16 @ 305
IV-S	20	12.7	203	1600	1524	26	32	1206	16	89	2438 x 4267 x 762	15-#22	15-#22	12-#29	12-#36	#16 @ 305
V-S	24	12.7	203	1753	1524	28	36	1355	16	89	2438 x 4877 x 914	17-#22	17-#22	12-#29	12-#36	#16 @ 305
VI-S	24	24.6	254	1753	1524	28	36	1355	16	89	2743 x 5182 x 914	18-#22	18-#22	12-#29	12-#36	#16 @ 305
VII-S	24	24.6	254	1753	1524	28	36	1355	16	89	3048 x 5486 x 914	19-#22	19-#22	13-#29	13-#36	#16 @ 305

Caltrans Metric

DIST	COUNTY	ROUTE	KILOMETER POST TOTAL PROJECT	SHEET NO.	TOTAL SHEETS

REGISTERED CIVIL ENGINEER

July 1, 2004
PLANS APPROVAL DATE

REGISTERED PROFESSIONAL ENGINEER Tiliat Sattar NO. C42892 Exp. 03-31-2006 CIVIL STATE OF CALIFORNIA

The State of California or its officers or agents shall not be responsible for the accuracy or completeness of electronic copies of this plan sheet.

To get to the Caltrans web site, go to: http://www.dot.ca.gov

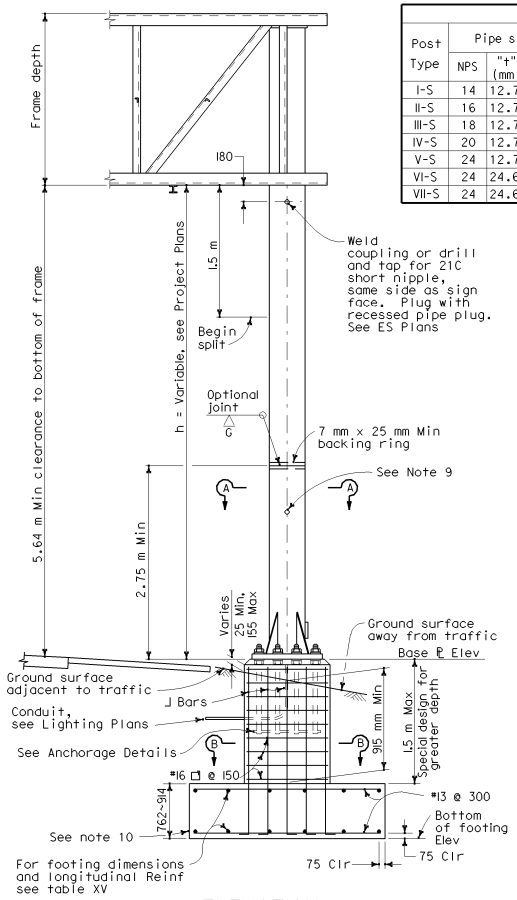

ELEVATION

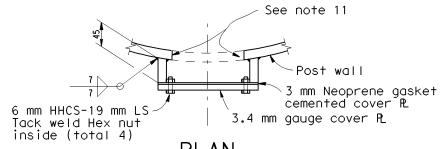

PLAN

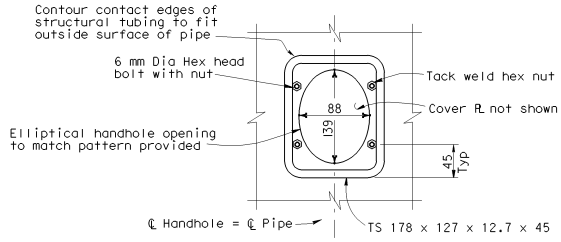

ELEVATION
TYPICAL DETAILS OF
HANDHOLE AND COVER

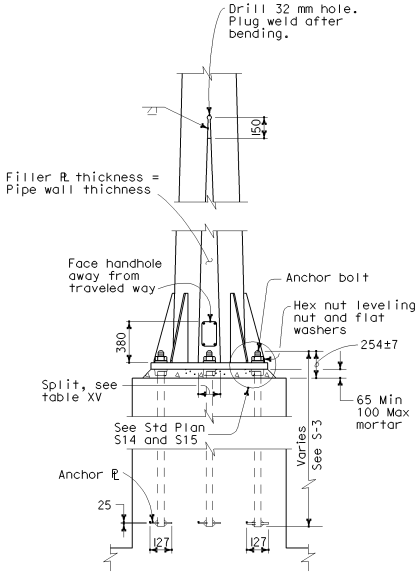

ANCHORAGE DETAILS

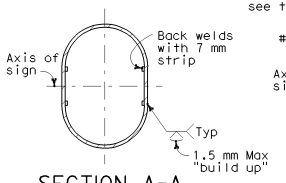

SECTION A-A

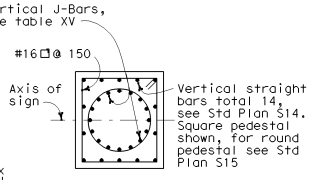

SECTION B-B

NOTES

1. For "General Notes" see Standard Plan S1.
2. Longer sides of base plates, pedestals and footings; shall be normal to axis of sign.
3. Backfill shall be in place prior to erection of post.
4. Thread upper 254 mm of anchor bolts and galvanize upper 305 mm.
5. Spread footing shown, use pile foundation when shown on the Project Plans. See details on Standard Plans S14 and S15.
6. Anchor plates may be retained with hex nut or formed head as an alternative to details shown.
7. When foundation is located on a steep slope with exposed face of concrete adjacent to traffic, see "Detail C" on Standard Plan S14 and S15.
8. Slope protection required when indicated on Project Plans.
9. Weld coupling or drill and tap for 41C chase nipple, perpendicular to sign panel axis away from approaching traffic. Plug with recessed pipe plug. See Standard Plan ES-15C.
10. Excavate to neat lines and place concrete against undisturbed material.
11. Grind edges smooth according to AWS D1.1 Section 5.15.4.3.

STATE OF CALIFORNIA
DEPARTMENT OF TRANSPORTATION

OVERHEAD SIGNS-TRUSS TWO POST TYPE POST TYPES I-S THROUGH VII-S

NO SCALE

ALL DIMENSIONS ARE IN MILLIMETERS UNLESS OTHERWISE SHOWN

S9

2004 Std PLAN S9

08-05-04

Back to Table of Contents

Post Type	Nominal Pipe Size (NPS)	Pipe Wall Thickness (mm)	Pipe split (mm)	Base PL OD & Thickness (mm)	Anchor		
					Bolt Circle (mm)	Bolts total & Dia (mm)	Length (mm)
I-S	14	12.7	127	864 x 51	711	12-51	1270
II-S	16	12.7	152	864 x 51	711	12-51	1270
III-S	18	12.7	178	940 x 51	787	12-51	1270
IV-S	20	12.7	203	1016 x 51	864	14-51	1270
V-S	24	12.7	203	1118 X 51	965	16-64	1524
VI-S	24	24.6	254	1219 x 64	1041	16-64	1524
VII-S	24	24.6	254	1219 x 64	1041	16-64	1524

TWO POST TABLE

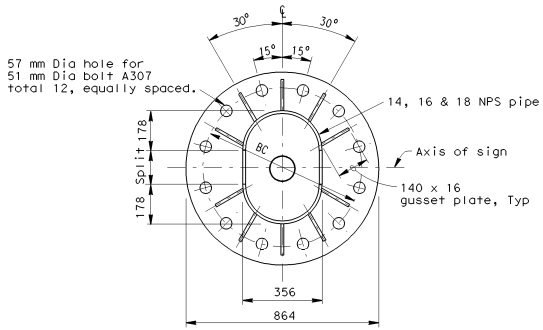

12 BOLTS

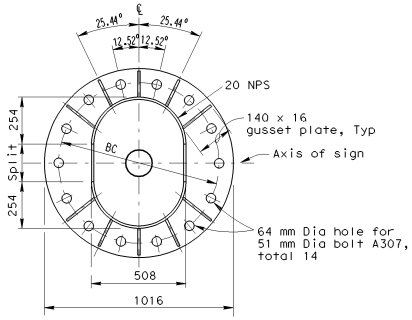

14 BOLTS

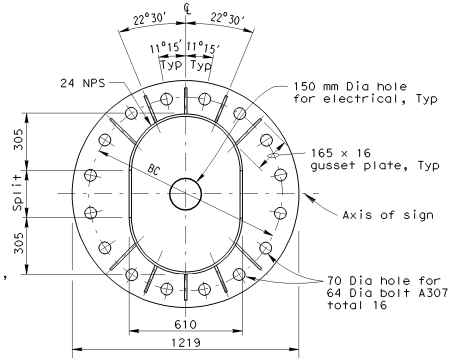

16 BOLTS

TWO POST TYPE BASE PLATE DETAILS

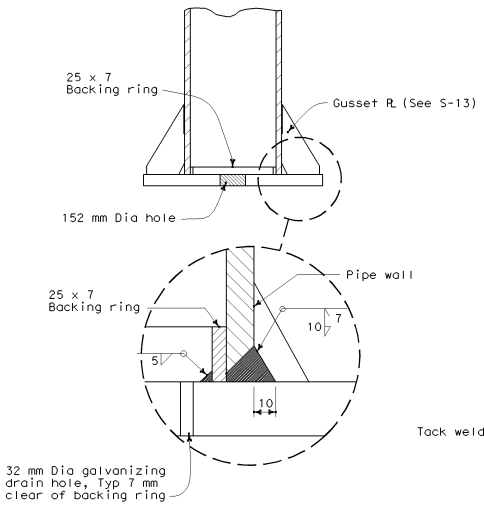

THRU POST AT BASE PLATE

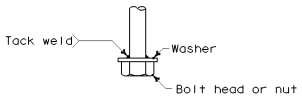

ANCHORAGE DETAIL

Caltrans Metric

DIST	COUNTY	ROUTE	KILOMETER POST TOTAL PROJECT	SHEET NO.	TOTAL SHEETS

REGISTERED ~~CIVIL~~ ENGINEER

July 1, 2004
PLANS APPROVAL DATE

REGISTERED PROFESSIONAL ENGINEER
Tillat Sattar
No. C42892
Exp. 03-31-2006
CIVIL
STATE OF CALIFORNIA

The State of California or its officers or agents shall not be responsible for the accuracy or completeness of electronic copies of this plan sheet.

To get to the Caltrans web site, go to: http://www.dot.ca.gov

STATE OF CALIFORNIA
DEPARTMENT OF TRANSPORTATION

OVERHEAD SIGNS-TRUSS TWO POST TYPE BASE PLATE AND ANCHORAGE DETAILS

NO SCALE

ALL DIMENSIONS ARE IN MILLIMETERS UNLESS OTHERWISE SHOWN

S10

2004 Std PLAN S10

08-05-04

Back to Table of Contents

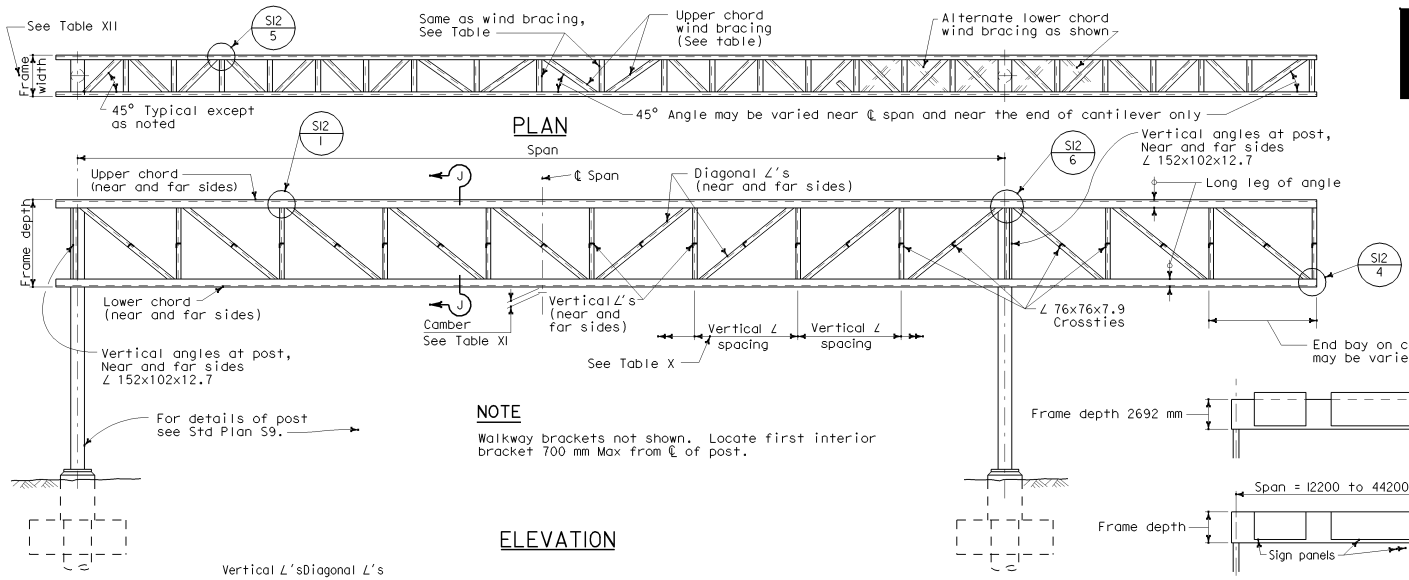

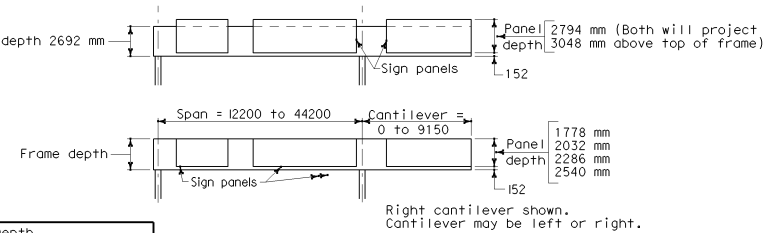

RANGE OF STRUCTURE SIZES

Span (m)	1778 mm Panel Depth					2032 mm Panel Depth					2286 mm Panel Depth				
	Frame Width (mm)	Chord ∠'s	Vertical ∠'s	Diagonal ∠'s	Wind Bracing ∠'s	Frame Width (mm)	Chord ∠'s	Vertical ∠'s	Diagonal ∠'s	Wind Bracing ∠'s	Frame Width (mm)	Chord ∠'s	Vertical ∠'s	Diagonal ∠'s	Wind Bracing ∠'s
12.2-15.4	915	127x89x9.5	89x89x7.9	89x89x7.9	64x64x6.4	915	127x89x9.5	89x89x7.9	89x89x7.9	64x64x6.4	915	127x89x9.5	89x89x7.9	89x89x7.9	64x64x6.4
15.5-18.5	915	127x89x9.5			64x64x6.4	915	127x89x9.5			64x64x6.4	915	127x89x9.5			64x64x6.4
18.6-21.5	915	127x89x9.5			64x64x6.4	915	127x89x9.5			64x64x6.4	915	127x89x9.5			64x64x6.4
21.6-24.6	915	152x102x12.7			64x64x6.4	915	152x102x12.7			64x64x6.4	915	152x102x12.7			64x64x6.4
24.7-27.6	915	152x102x12.7			64x64x6.4	915	152x102x12.7			64x64x6.4	915	152x102x12.7			64x64x6.4
27.7-30.7	915	152x102x12.7			64x64x6.4	915	152x102x12.7			64x64x6.4	915	152x102x12.7			64x64x6.4
30.8-33.7	915	203x102x19.0			64x64x6.4	915	203x102x19.0			64x64x6.4	915	203x102x19.0			76x76x9.5
33.8-36.8	915	203x102x19.0			64x64x6.4	915	203x102x19.0			64x64x6.4	915	203x102x19.0			76x76x9.5
36.9-39.8	915	203x102x19.0			64x64x6.4	915	203x102x19.0			64x64x6.4	1067	203x102x19.0			76x76x9.5
39.9-44.2	915	203x102x19.0			64x64x6.4	915	203x102x19.0			64x64x6.4	1067	203x102x19.0			76x76x9.5

Span (m)	2540 mm Panel Depth				
	Frame Width (mm)	Chord ∠'s	Vertical ∠'s	Diagonal ∠'s	Wind Bracing ∠'s
12.2-15.4	915	127x89x9.5	89x89x7.9	89x89x7.9	64x64x6.4
15.5-18.5	915	127x89x9.5			64x64x6.4
18.6-21.5	915	127x89x9.5			64x64x6.4
21.6-24.6	915	152x102x12.7			64x64x6.4
24.7-27.6	915	152x102x12.7			64x64x6.4
27.7-30.7	915	152x102x12.7			64x64x6.4
30.8-33.7	1067	203x102x19.0			76x76x9.5
33.8-36.8	1067	203x102x19.0			76x76x9.5
36.9-39.8	1067	203x102x19.0			76x76x9.5
39.9-44.2	1067	203x102x19.0			76x76x9.5

TABLE XII

Span (m)	2794 mm and 3048 mm Panel Depth				
	Frame Width (mm)	Chord ∠'s	Vertical ∠'s	Diagonal ∠'s	Wind Bracing ∠'s
12.2-15.4	915	127x89x9.5	89x89x7.9	89x89x7.9	64x64x6.4
15.5-18.5	915	127x89x9.5			64x64x6.4
18.6-21.5	915	127x89x9.5			64x64x6.4
21.6-24.6	915	152x102x12.7			76x76x9.5
24.7-27.6	915	152x102x12.7			76x76x9.5
27.7-30.7	1067	152x102x12.7			76x76x9.5
30.8-33.7	1067	203x102x19.0			76x76x9.5
33.8-36.8	1067	203x102x19.0			76x76x9.5
36.9-39.8	1067	203x102x19.0			76x76x9.5
39.9-44.2	1067	229x102x19.0			76x76x9.5

Panel Depth (mm)	Frame Depth (mm)	Max Vertical ∠ Spacing (mm)
1778	1931	1829
2032	2185	1829
2286	2439	2286
2540	2693	2286
2794	2693	2286
3048	2693	2286

TABLE X

Camber For Fabrication At ℄ Span	
Span (m)	Camber (mm)
12.19 - 15.24	27
15.25 - 30.48	54
30.49 - 44.20	83

Camber to approximate parabola.
Camber of cantilever arm = +13 mm for arms greater than 3050 mm

TABLE XI

NOTE

Frame widths shown are nominal. These widths may be varied by 6.4 mm to standardize fabrication methods.

Standard Plan Sheet No.
Detail No.

STATE OF CALIFORNIA
DEPARTMENT OF TRANSPORTATION

OVERHEAD SIGNS-TRUSS TWO POST TYPE STRUCTURAL FRAME MEMBERS

NO SCALE

ALL DIMENSIONS ARE IN MILLIMETERS UNLESS OTHERWISE SHOWN

S11

DIST	COUNTY	ROUTE	KILOMETER POST TOTAL PROJECT	SHEET NO.	TOTAL SHEETS

REGISTERED CIVIL ENGINEER

July 1, 2004
PLANS APPROVAL DATE

REGISTERED PROFESSIONAL ENGINEER Tiliat Sattar No. C42892 Exp. 03-31-2006 CIVIL STATE OF CALIFORNIA

The State of California or its officers or agents shall not be responsible for the accuracy or completeness of electronic copies of this plan sheet.

To get to the Caltrans web site, go to: http://www.dot.ca.gov

07-30-04

Back to Table of Contents

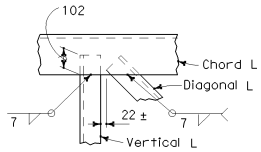

DETAIL ①

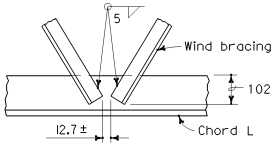

DETAIL ②

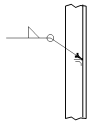

DETAIL ③

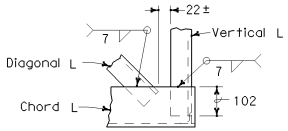

DETAIL ④

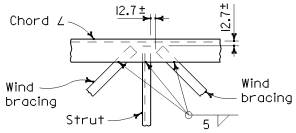

DETAIL ⑤

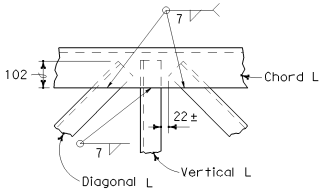

DETAIL ⑥

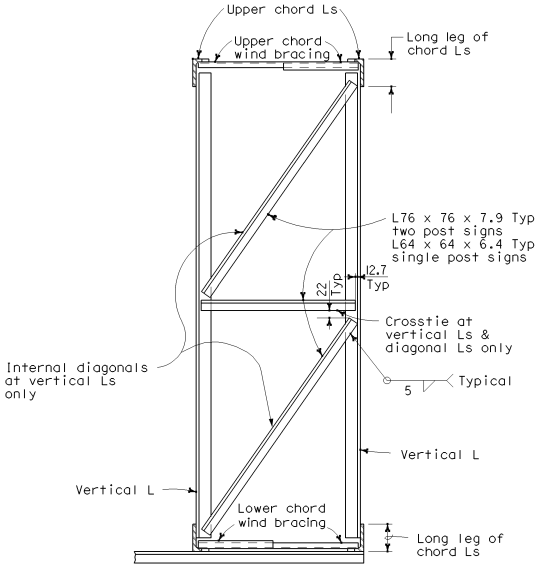

TYPICAL SECTION J-J

Note:

Diagonal Ls in plane of truss not shown. Bracing shown is at all vertical Ls of truss.

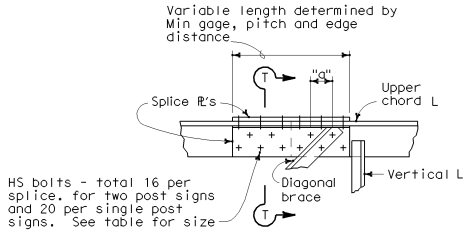

SPLICE WITH DIAGONAL ANGLE

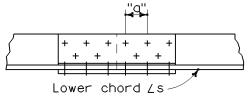

SPLICE WITHOUT DIAGONAL ANGLE

BOLTED CHORD SPLICE

SPLICE NOTES

Location of Splices:

The splice shall be located so as not to interfere with mounting the walkway brackets or the clip angles for the removable sign panel frame. The wind bracing in the area of the bolted chord splice shall be bolted to the chord angles with a 19 mm Dia HS bolt, nut, 2 cut washers and lock washer.

Filler PL:

The plates welded to the angle legs on the inside shall be welded before drilling the bolt holes. The plates shall be the same length as the cover plates. The plates are not necessary on the single post signs if the splice is located over 1/3 of the cantilever length from the post. Alternative splice details may be used if approved by the Engineer.

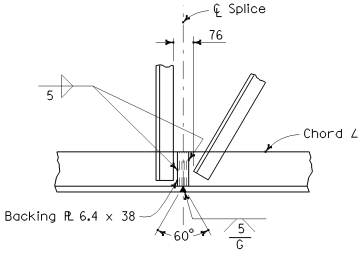

WELDED CHORD SPLICE

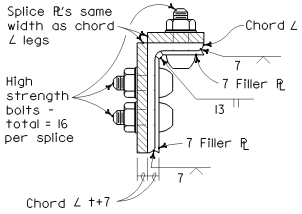

SECTION T-T
TWO POST SIGNS

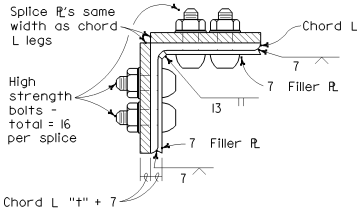

SECTION T-T
SINGLE POST SIGNS

BOLTED CHORD SPLICE		
TWO POST SIGNS		
Chord ∠	Nominal Bolt Diameter	"a" mm Min
127 x 89 x 9.5	M20 x 2.5	64
152 x 102 x 12.7	M22 x 2.5	76
203 x 102 x 19.0	M30 x 3.5	96
SINGLE POST SIGNS		
Chord ∠	Nominal Bolt Diameter	"a" mm Min
127 x 127 x 12.7	M22 x 2.5	76
152 x 152 x 12.7	M22 x 2.5	76

Caltrans Metric

DIST	COUNTY	ROUTE	KILOMETER POST TOTAL PROJECT	SHEET NO.	TOTAL SHEETS

REGISTERED CIVIL ENGINEER

July 1, 2004
PLANS APPROVAL DATE

REGISTERED PROFESSIONAL ENGINEER Tillat Sattar No. C42892 Exp. 03-31-2006 CIVIL STATE OF CALIFORNIA

The State of California or its officers or agents shall not be responsible for the accuracy or completeness of electronic copies of this plan sheet.

To get to the Caltrans web site, go to: http://www.dot.ca.gov

STATE OF CALIFORNIA
DEPARTMENT OF TRANSPORTATION

OVERHEAD SIGNS-TRUSS STRUCTURAL FRAME DETAILS

NO SCALE

ALL DIMENSIONS ARE IN MILLIMETERS UNLESS OTHERWISE SHOWN

S12

07-30-04

Back to Table of Contents

DIST	COUNTY	ROUTE	KILOMETER POST TOTAL PROJECT	SHEET NO.	TOTAL SHEETS

REGISTERED CIVIL ENGINEER

July 1, 2004
PLANS APPROVAL DATE

REGISTERED PROFESSIONAL ENGINEER Tiliat Sattar No. C42892 Exp. 03-31-2006 CIVIL STATE OF CALIFORNIA

The State of California or its officers or agents shall not be responsible for the accuracy or completeness of electronic copies of this plan sheet.

To get to the Caltrans web site, go to: http://www.dot.ca.gov

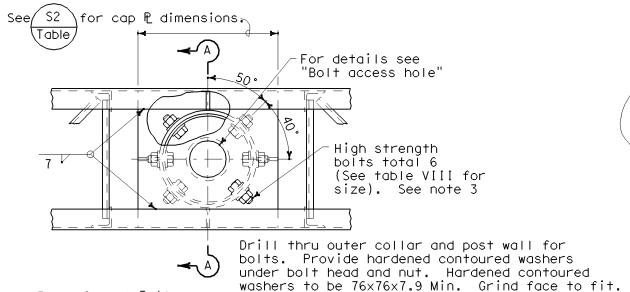

PLAN

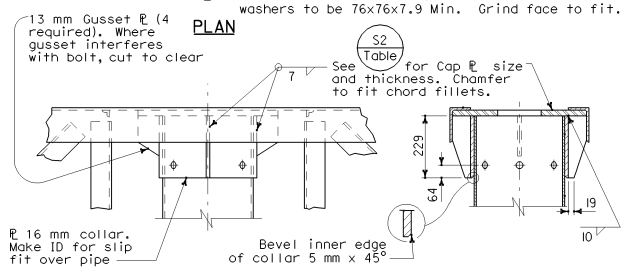

ELEVATION SECTION A-A

UPPER JUNCTURE CONNECTION

Single Post Type

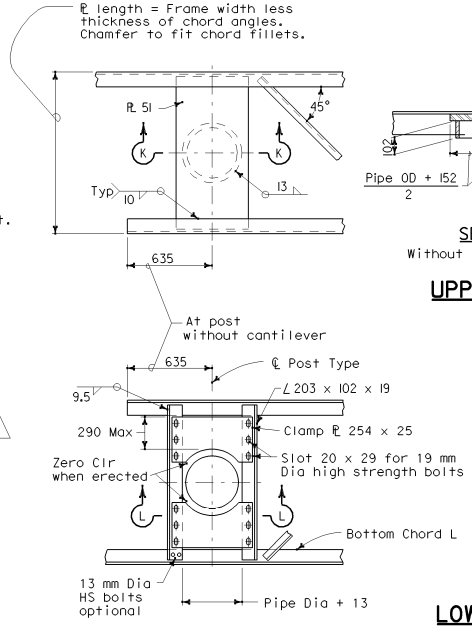

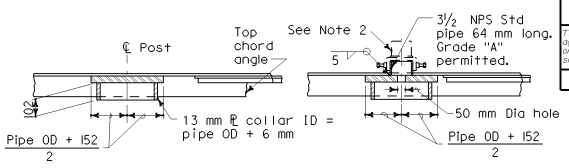

SECTION K-K Without photoelectric unit

SECTION K-K With photoelectric unit

UPPER CHORD CONNECTION TO POST

Two Post Type

Notes:

1. Post not shown.
2. Photoelectric unit and 3-prong, EEI-NEMA standard, twist lock plug reception.

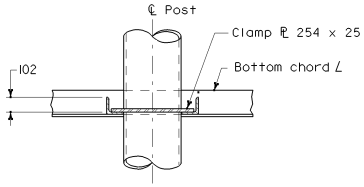

SECTION L-L

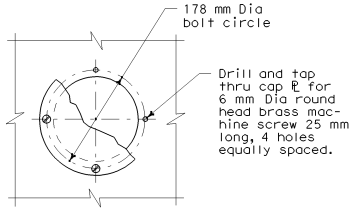

PLAN

LOWER CHORD CONNECTION TO POST

Two Post Type

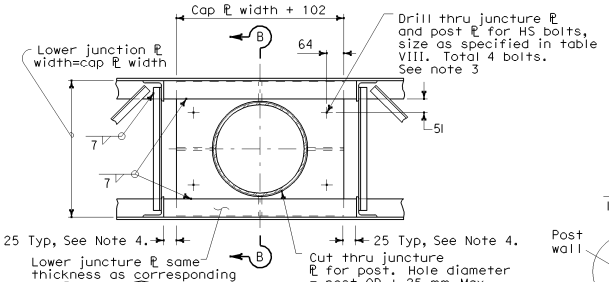

PLAN

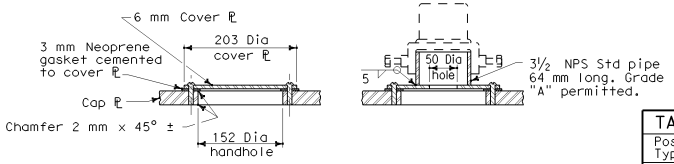

SECTION Without photoelectric unit

SECTION With photoelectric unit

BOLT-ACCESS HOLE

Single Post Type

TABLE VIII	
Post Type	Bolt Size
II	M22
III	M24
IV	M27
V	M27
VI	M30
VII	M30
VIII	M36
IX	M36

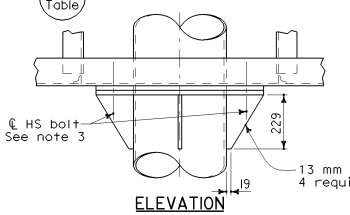

ELEVATION

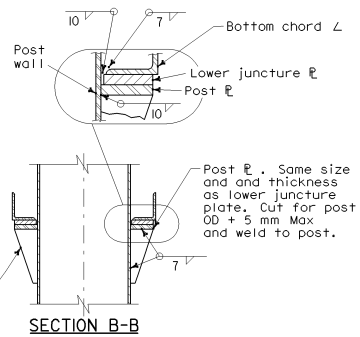

SECTION B-B

LOWER JUNCTURE CONNECTION

Single Post Type

Notes: (Single Post Type)

1. In all cases, truss shall be supported at lower juncture connection. Bearing surface shall be finished true.
2. Post to truss connections shall be fitted in shop.
3. High strength bolts shall be snug tighten. Torque requirements are waived.
4. See Part Plan of Cantilever Type at post on Standard Plan S4.

STATE OF CALIFORNIA
DEPARTMENT OF TRANSPORTATION

OVERHEAD SIGNS-TRUSS FRAME JUNCTURE DETAILS

NO SCALE

ALL DIMENSIONS ARE IN MILLIMETERS UNLESS OTHERWISE SHOWN

S13

08-02-04

Back to Table of Contents

DIST	COUNTY	ROUTE	KILOMETER POST TOTAL PROJECT	SHEET NO.	TOTAL SHEETS

Caltrans Metric

REGISTERED CIVIL ENGINEER

July 1, 2004
PLANS APPROVAL DATE

REGISTERED PROFESSIONAL ENGINEER Tillat Sattar No. C42892 Exp. 03-31-2006 CIVIL STATE OF CALIFORNIA

The State of California or its officers or agents shall not be responsible for the accuracy or completeness of electronic copies of this plan sheet.

To get to the Caltrans web site, go to: http://www.dot.ca.gov

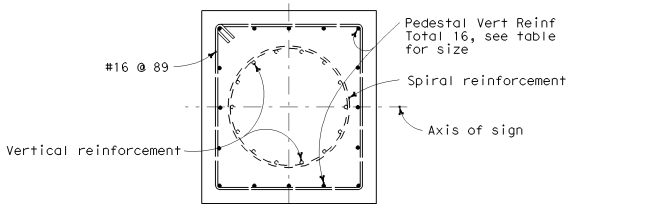

SECTION B-B

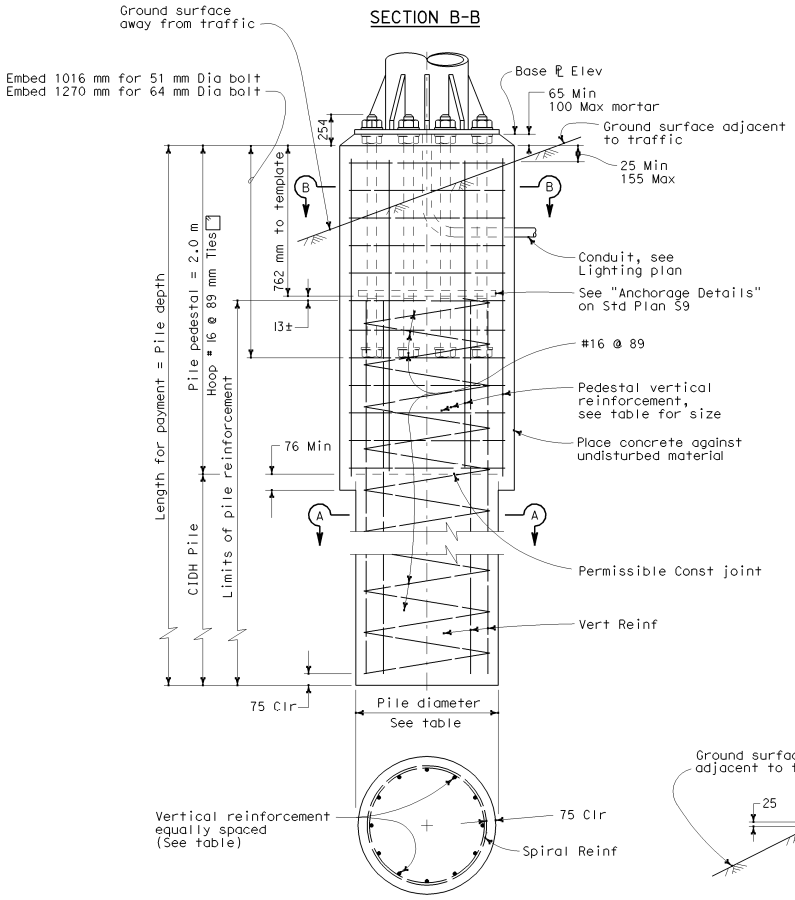

SECTION A-A

Post Type	Anchor Bolts				Square Pedestal							CIDH Pile						
	Total	Dia (mm)	BC (mm)	Total Length (mm)	Pedestal Square one side (mm)	Pedestal Depth (mm)	Reinforcing			Hoop		Pile Dia (mm)	Pile Depth (m) **	Reinforcing			Spiral	
							Total	Bar Size	Spacing each face	Bar Size	Pitch			Total	Bar Size	BC (mm)	Bar Size	Pitch
I-S	12	50.8	711	1270	1600	1981	16	32	346	16	89	1372	5.5	26	32	1143	16	89
II-S	12	50.8	711	1270	1600	1981	16	32	346	16	89	1372	6.0	26	32	1143	16	89
III-S	12	50.8	787	1270	1600	1981	16	32	346	16	89	1372	7.0	26	32	1143	16	89
IV-S	14	50.8	864	1270	1600	1981	16	32	346	16	89	1372	7.0	26	32	1143	16	89
V-S	16	63.5	965	1524	1763	1981	16	36	381	16	89	1524	8.0	28	36	1295	16	89
VI-S	16	63.5	1041	1524	1763	1981	16	36	381	16	89	1524	8.5	28	36	1295	16	89
VII-S	16	63.5	1041	1524	1763	1981	16	36	381	16	89	1524	8.5	28	36	1295	16	89

** Use Foundation Depth shown in table unless otherwise shown on the Project Plans.

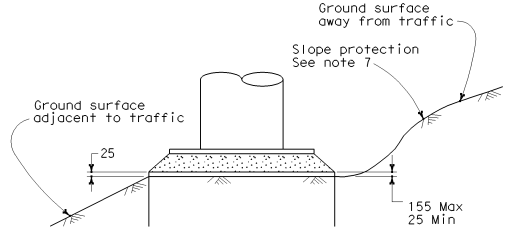

DETAIL C

NOTES

1. For anchor bolt layout see post sheet.
2. For "Base ℄ elevation" see Project Plans.
3. Pedestals and base plates, longer sides shall be normal to axis of sign.
4. Prior to erection of the post, backfill which is epuivalent to the surrounding material, shall be in place.
5. Pedestal shall be formed 150 mm Min below ground surface. Remainder to be placed against undisturbed material.
6. Slope protection required when indicated on the Project Plans.
7. Foundation design is based on 2001 ASSHTO article 13.6 Broms' approximate procedure assuming a cohesionless material. The angle of internal friction Dia used 30° and unit weight of soil used is 1922 kg/m³.

STATE OF CALIFORNIA
DEPARTMENT OF TRANSPORTATION

OVERHEAD SIGNS-TRUSS TWO POST TYPE SQUARE PEDESTAL FOUNDATION

NO SCALE

ALL DIMENSIONS ARE IN MILLIMETERS UNLESS OTHERWISE SHOWN

S14

08-05-04

Back to Table of Contents

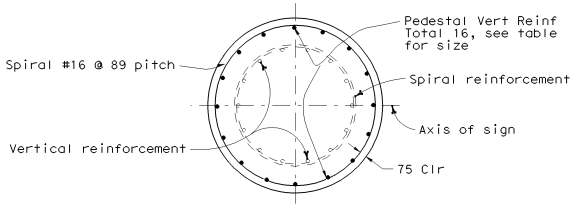

SECTION B-B

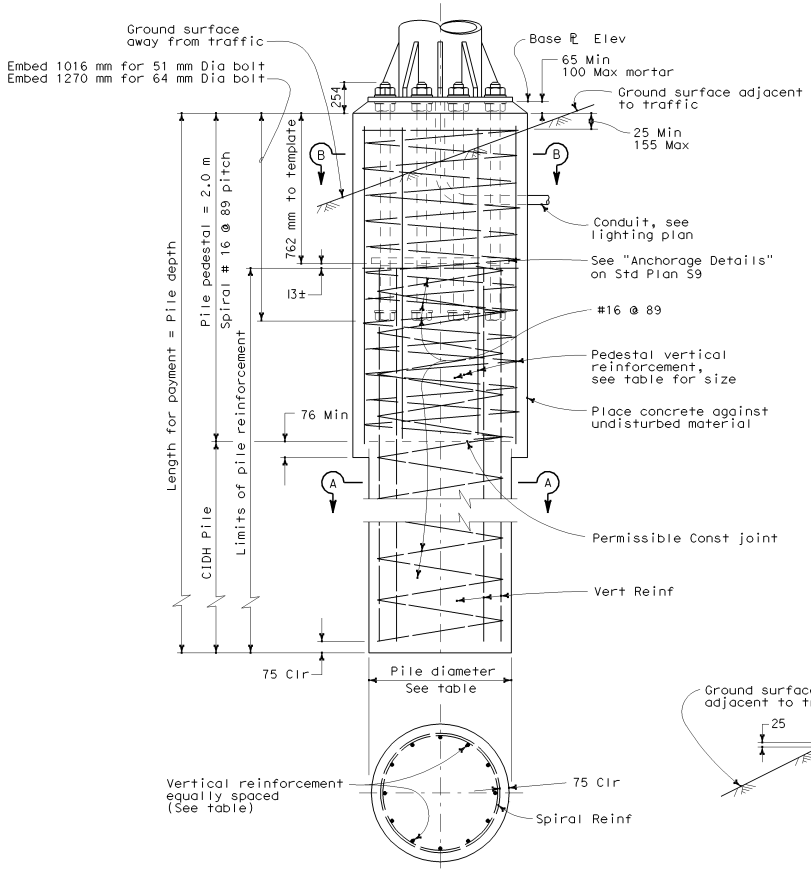

SECTION A-A

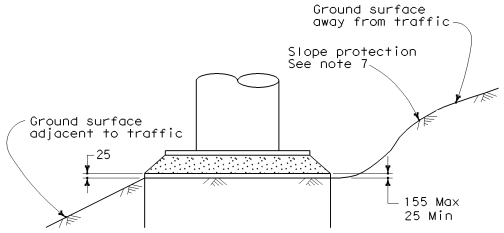

DETAIL C

Post Type	Anchor Bolts				Round Pedestal							CIDH Pile						
							Reinforcing			Hoop				Reinforcing			Spiral	
	Total	Dia (mm)	BC (mm)	Total Length (mm)	Dia (mm)	Depth (m)	Total	Bar Size	BC (mm)	Bar Size	Pitch	Pile Dia (mm)	Pile Depth (m) **	Total	Bar Size	BC (mm)	Bar Size	Pitch
I-S	12	50.8	711	1270	1600	1981	16	32	1381	16	89	1372	5.5	26	32	1143	16	89
II-S	12	50.8	711	1270	1600	1981	16	32	1381	16	89	1372	6	26	32	1143	16	89
III-S	12	50.8	787	1270	1600	1981	16	32	1381	16	89	1372	7	26	32	1143	16	89
IV-S	14	50.8	864	1270	1600	1981	16	32	1381	16	89	1372	7	26	32	1143	16	89
V-S	16	63.5	965	1524	1753	1981	16	36	1533	16	89	1524	8	28	36	1295	16	89
VI-S	16	63.5	1041	1524	1753	1981	16	36	1533	16	89	1524	8.5	28	36	1295	16	89
VII-S	16	63.5	1041	1524	1753	1981	16	36	1533	16	89	1524	8.5	28	36	1295	16	89

** Use Foundation Depth shown in table unless otherwise shown on the Project Plans.

NOTES

1. For anchor bolt layout see post sheet.
2. For "Base ℄ elevation" see Project Plans.
3. Prior to erection of the post, backfill which is equivalent to the surrounding material, shall be in place.
4. Pedestal shall be formed 150 mm Min below ground surface. Remainder to be placed against undisturbed material.
5. Slope protection required when indicated on the Project Plans.
6. Foundation design is based on 2001 ASSHTO article 13.6 Broms' approximate procedure assuming a cohesionless material. The angle of internal friction Dia used 30° and unit weight of soil used is 1922 kg/m³.

Caltrans Metric

DIST	COUNTY	ROUTE	KILOMETER POST TOTAL PROJECT	SHEET NO.	TOTAL SHEETS

REGISTERED ~~CIVIL~~ ENGINEER

July 1, 2004
PLANS APPROVAL DATE

REGISTERED PROFESSIONAL ENGINEER
Tiliat Sattar
NO. C42892
Exp. 03-31-2006
CIVIL
STATE OF CALIFORNIA

The State of California or its officers or agents shall not be responsible for the accuracy or completeness of electronic copies of this plan sheet.

To get to the Caltrans web site, go to: http://www.dot.ca.gov

STATE OF CALIFORNIA
DEPARTMENT OF TRANSPORTATION

OVERHEAD SIGNS-TRUSS TWO POST TYPE ROUND PEDESTAL FOUNDATION

NO SCALE

ALL DIMENSIONS ARE IN MILLIMETERS UNLESS OTHERWISE SHOWN

S15

08-05-04

Back to Table of Contents

DIST	COUNTY	ROUTE	KILOMETER POST TOTAL PROJECT	SHEET NO.	TOTAL SHEETS

REGISTERED ~~CIVIL~~ ENGINEER

July 1, 2004
PLANS APPROVAL DATE

REGISTERED PROFESSIONAL ENGINEER Tillat Sattar No. C42892 Exp. 03-31-2006 CIVIL STATE OF CALIFORNIA

The State of California or its officers or agents shall not be responsible for the accuracy or completeness of electronic copies of this plan sheet.

To get to the Caltrans web site, go to: http://www.dot.ca.gov

Caltrans Metric

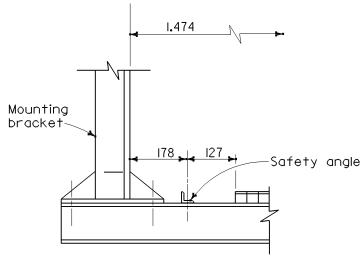

BRIDGE MOUNTED

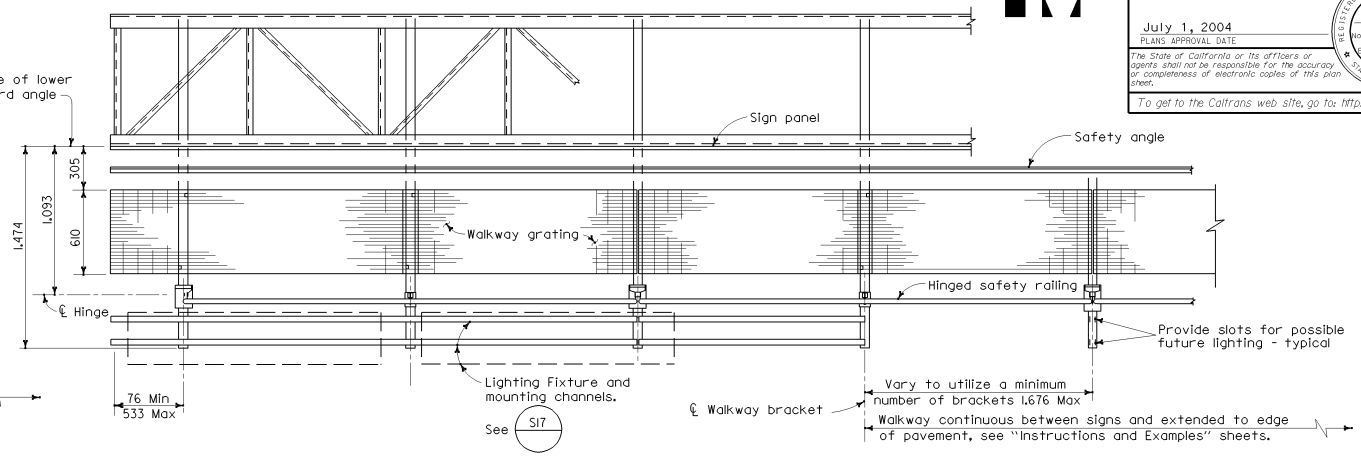

WALKWAY PLAN

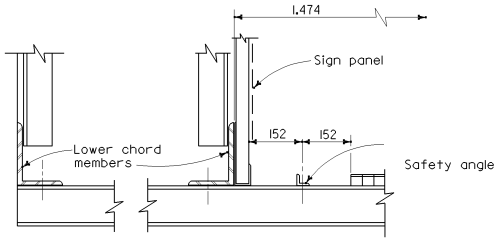

BOX BEAM
CLOSED TRUSS

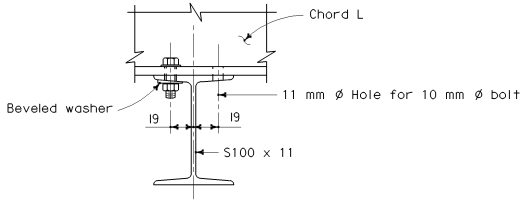

SECTION B-B

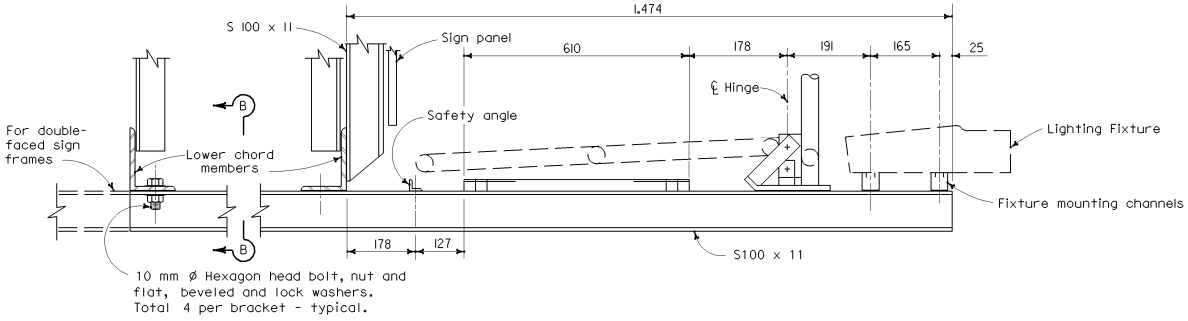

TRUSS

TYPICAL WALKWAY SECTION

NOTE

For spacing of lighting fixtures, see Standard Plan ES-15A.

STATE OF CALIFORNIA
DEPARTMENT OF TRANSPORTATION

OVERHEAD SIGNS WALKWAY DETAILS No.1

NO SCALE

ALL DIMENSIONS ARE IN MILLIMETERS UNLESS OTHERWISE SHOWN

S16

08-02-04

Back to Table of Contents

DIST	COUNTY	ROUTE	KILOMETER POST TOTAL PROJECT	SHEET NO.	TOTAL SHEETS

REGISTERED CIVIL ENGINEER

July 1, 2004
PLANS APPROVAL DATE

REGISTERED PROFESSIONAL ENGINEER Iliat Sattar No. C42892 Exp. 03-31-2006 CIVIL STATE OF CALIFORNIA

The State of California or its officers or agents shall not be responsible for the accuracy or completeness of electronic copies of this plan sheet.

To get to the Caltrans web site, go to: http://www.dot.ca.gov

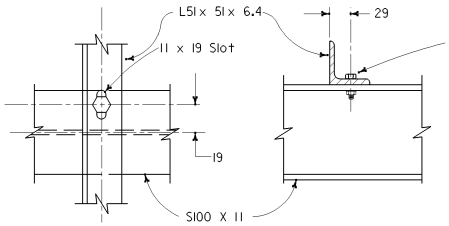

SAFETY ANGLE DETAILS

For bridge mounted signs

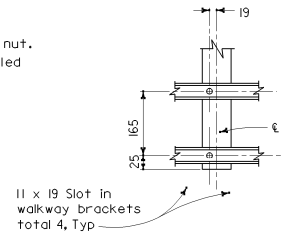

TYPICAL CONNECTION

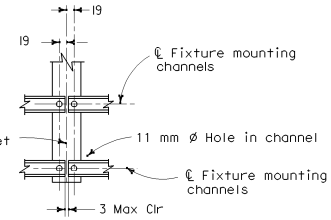

CONNECTION AT SPLICE

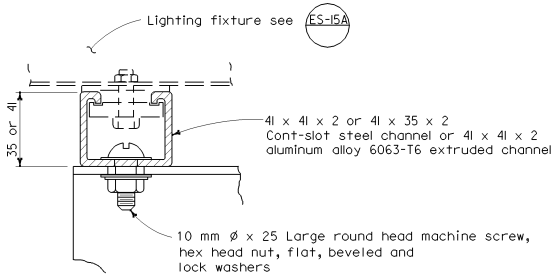

LIGHTING FIXTURE MOUNTING CHANNEL DETAILS

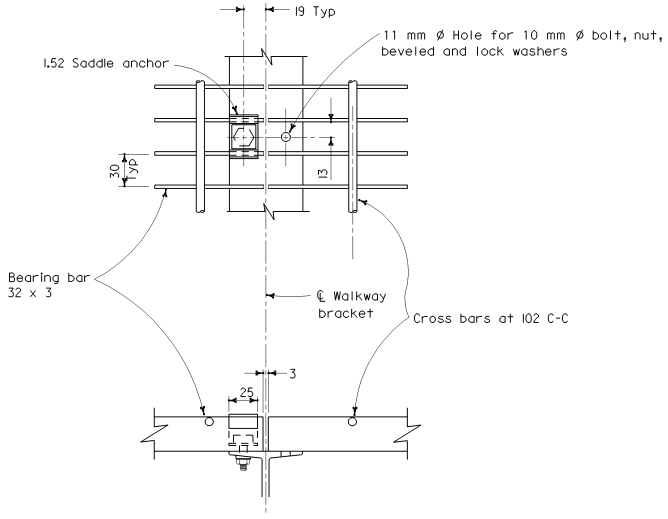

WALKWAY DETAILS

NOTES

1) Welded type grating shall have 32 x 3 bearing bars at 30 mm centers with 6 mm diameter (or equal) cross bars at 102 mm centers. If mechanical lock grating is used, it shall be equal in strength to the welded type. Alternate hold-down clips may be submitted for approval.

2) Walkway grating and light fixture mounting channels to be continuous (no splices) over as many walkway brackets as practicable consistent with fabrication, ease of handling and assembly.

STATE OF CALIFORNIA
DEPARTMENT OF TRANSPORTATION

OVERHEAD SIGNS WALKWAY DETAILS No.2

NO SCALE

ALL DIMENSIONS ARE IN MILLIMETERS UNLESS OTHERWISE SHOWN

S17

07-30-04

Back to Table of Contents

DIST	COUNTY	ROUTE	KILOMETER POST TOTAL PROJECT	SHEET NO.	TOTAL SHEETS

Caltrans Metric

REGISTERED CIVIL ENGINEER

July 1, 2004
PLANS APPROVAL DATE

REGISTERED PROFESSIONAL ENGINEER Tillat Sattar No. C42892 Exp. 03-31-2006 CIVIL STATE OF CALIFORNIA

The State of California or its officers or agents shall not be responsible for the accuracy or completeness of electronic copies of this plan sheet.

To get to the Caltrans web site, go to: http://www.dot.ca.gov

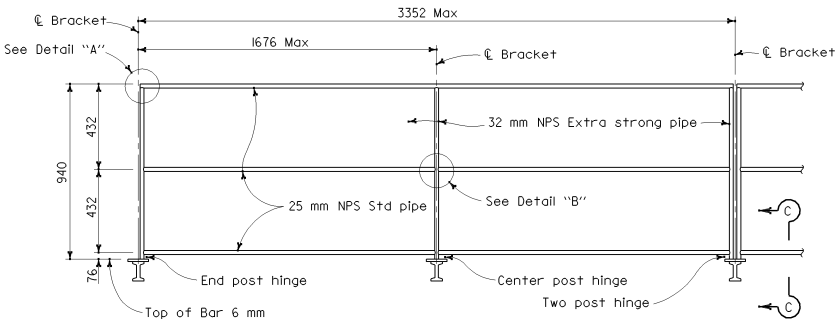

SAFETY RAILING ELEVATION

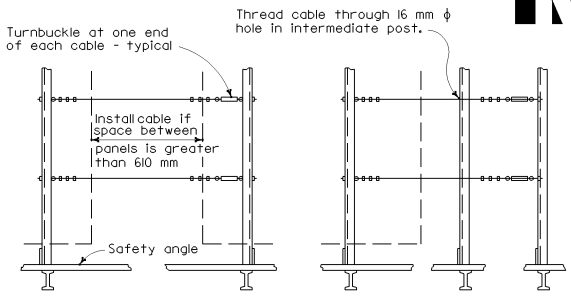

BETWEEN PANELS BEYOND PANELS

SAFETY CABLE ELEVATION

For bridge mounted signs

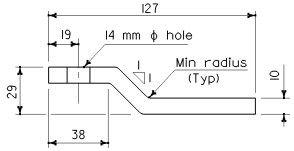

PLAN - KICKER BAR

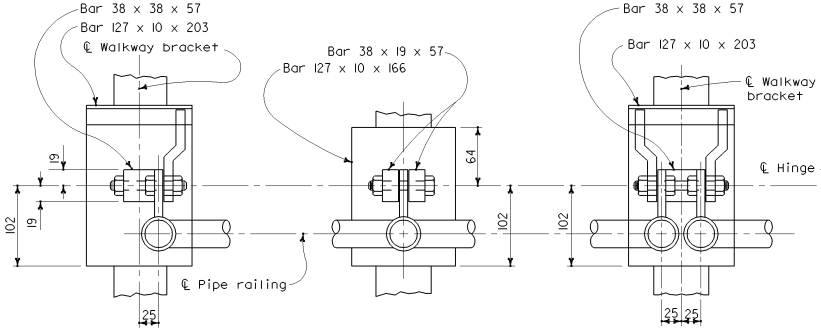

END POST CENTER POST TWO POST

WELDED HINGE - PLAN

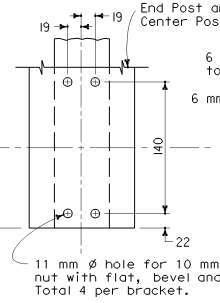

TYPICAL BOLTED (ALTERNATIVE) HINGED CONNECTION

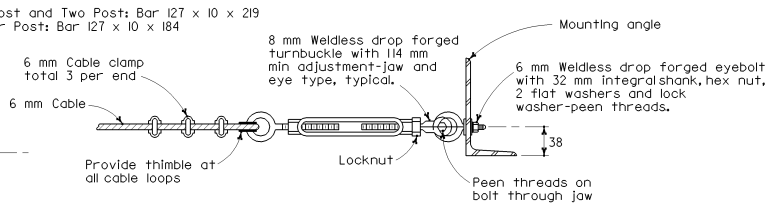

TURNBUCKLE DETAILS

NOTES

1. Special care shall be taken to insure that the complete hinge and latch assembly will hold the safety railing in a steady manner, free of wobble while in the raised position. Maximum allowable displacement from vertical at top of railing when latched shall be 25 mm.
2. Safety chain shall be 5 mm galvanized steel coil chain, approximately 39.4 links per meter. Length shall be minimum which allows lock-up of safety railing. Minimum of two safety chains per safety railing.

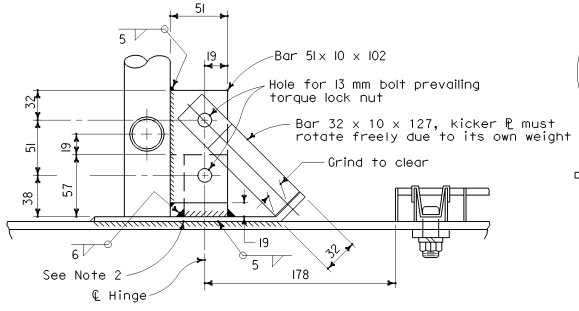

SECTION C-C

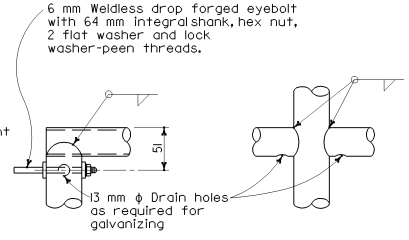

DETAIL A DETAIL B

NOTES

Alternative venting methods may be used if approved by the Engineer.

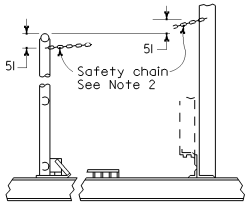

CHAIN ASSEMBLY

STATE OF CALIFORNIA
DEPARTMENT OF TRANSPORTATION

OVERHEAD SIGNS WALKWAY SAFETY RAILING DETAILS

NO SCALE

ALL DIMENSIONS ARE IN MILLIMETERS UNLESS OTHERWISE SHOWN

S18

06-22-04

Back to Table of Contents

DIST	COUNTY	ROUTE	KILOMETER POST TOTAL PROJECT	SHEET NO.	TOTAL SHEETS

REGISTERED CIVIL ENGINEER

July 1, 2004
PLANS APPROVAL DATE

REGISTERED PROFESSIONAL ENGINEER Tiliat Sattar NO. C42892 Exp. 03-31-2006 CIVIL STATE OF CALIFORNIA

The State of California or its officers or agents shall not be responsible for the accuracy or completeness of electronic copies of this plan sheet.

To get to the Caltrans web site, go to: http://www.dot.ca.gov

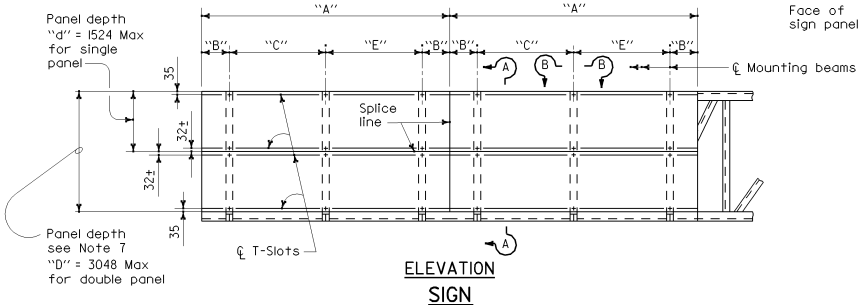

ELEVATION
SIGN

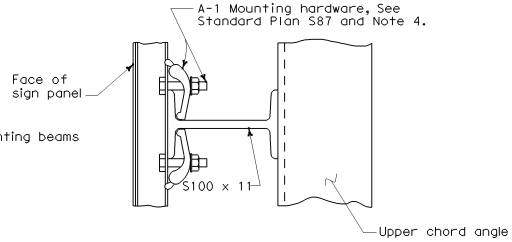

SECTION B-B

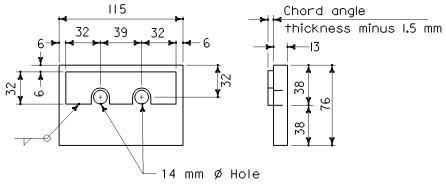

CHORD ANGLE CLAMP

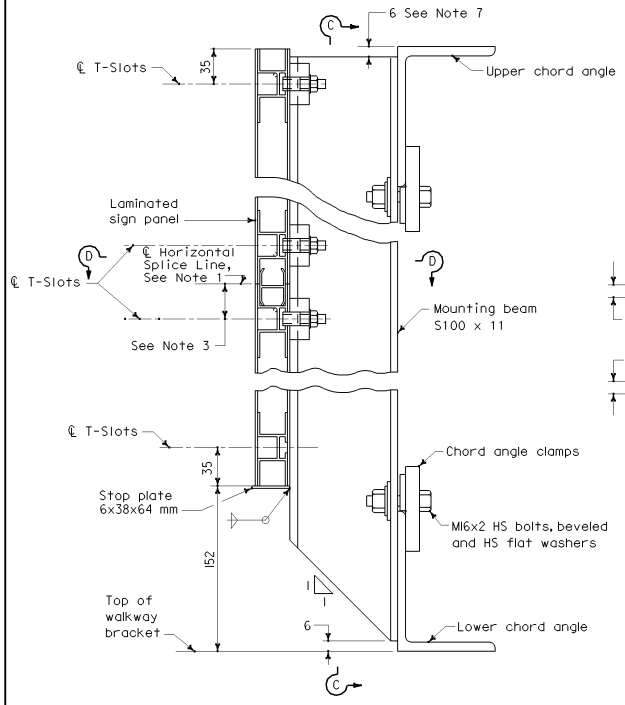

SECTION A-A

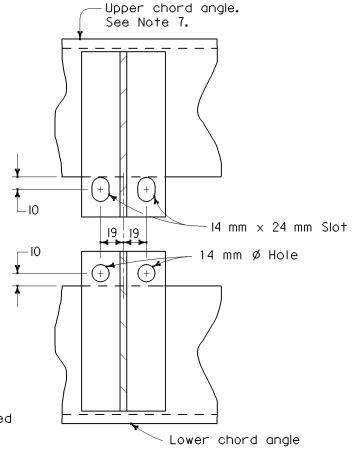

SECTION C-C

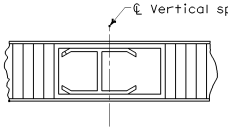

SECTION D-D

MOUNTING BEAM SPACING TABLE

SIGN PANEL LENGTH * (m)	NUMBER MOUNTING BEAMS	SIGN PANEL OVERHANG (mm)	MOUNTING BEAM SPACING (m)	(m)
"A"		"B"	"C"	"E"
1.52	2	229	1.02	
1.83	2	305	1.22	
2.13	2	381	1.37	
2.44	2	458	1.52	
2.74	2	559	1.63	
3.05	2	610	1.83	
3.35	2	610	2.13	
3.66	2	762	2.13	
3.96	2	762	2.44	
4.27	2	762	2.74	
4.57	2	915	2.74	
4.88	3	153	2.29	2.29
5.18	3	305	2.29	2.29
5.49	3	305	2.44	2.44
5.79	3	305	2.59	2.59
6.10	3	458	2.59	2.59
6.40	3	458	2.74	2.74
6.71	3	610	2.74	2.74
7.01	3	762	2.74	2.74
7.32	3	915	2.74	2.74

* Signs longer than 7.32 meters are fabricated and mounted as adjoining single panels. The location of the vertical splice line will be determined by the Engineer.

NOTES

1. The location of the horizontal splice line is dependent on the sign panel manufacturer for signs greater than 1524 mm in depth.
2. Mounting bolts and clamps are required on each side of the horizontal splice lines at each support beam.
3. Dimension varies from panel to panel. Average value approximate 32 mm.
4. Torque stainless steel sign panel mounting bolts to 12 Nm.
5. Chord angle clamp to be galvanized after fabrication.
6. The Contractor shall verify all dependent dimensions in the field before ordering or fabricating any material.
7. 2750 mm and 3000 mm sign panel along with the mounting beams will project above the top chord truss member 254 mm and 508 mm respectively. Attachment details shall be the same.

STATE OF CALIFORNIA
DEPARTMENT OF TRANSPORTATION

OVERHEAD SIGNS-TRUSS SIGN MOUNTING DETAILS LAMINATED PANEL-TYPE A

NO SCALE

ALL DIMENSIONS ARE IN MILLIMETERS UNLESS OTHERWISE SHOWN

S19

07-30-04

Back to Table of Contents

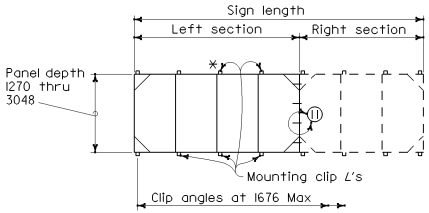

REMOVABLE FRAME GREATER THAN 6.10 m

* 2794 & 3048 sign panel frames will project above the top chord of the truss. In these cases the top clips shall be bolted to vertical frame members. See Standard Plan S22 for details.

Sign Length (m)	Left Section (m)	Right Section (m)
6.71	3.66	3.05
7.32	3.66	3.66
7.93	3.66	4.27
8.54	4.88	3.66
9.15	4.88	4.27
9.76	4.88	4.88
10.37	4.88	5.49
10.98	6.10	4.88
11.59	6.10	5.49
12.20	6.10	6.10

NOTES

Frames for signs greater than 6.10 m in length shall be fabricated in two sections with left section a multiple of 1220 in length. See table above.

Sections shall be hoisted into place individually and bolted together as per detail (11) prior to tightening of mounting clip bolts.

Bolting two sections together and hoisting simultaneously will not be permitted.

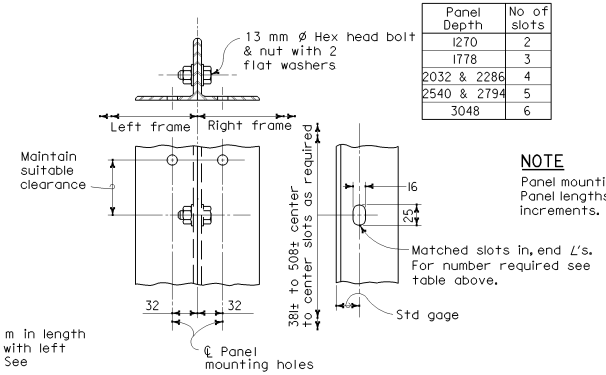

Panel Depth	No of slots
1270	2
1778	3
2032 & 2286	4
2540 & 2794	5
3048	6

DETAIL (11)

NOTE

Panel mounting holes not shown. Panel lengths available in 610 increments.

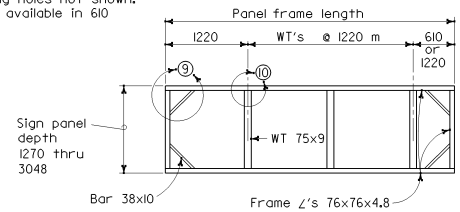

TYPICAL REMOVABLE FRAME

(1220 thru 6096)

NOTES

1. Frames shall be all-welded construction.
2. Panel mounting holes shall be drilled by template. Sign panel may be considered a template.
3. Drilled and tapped holes 6.34 mm may be used where interference due to welds or structural members is encountered.
4. WT 75 x 9 shall be flush with faces of frame angles.
5. Mounting clip angles shall be located such as to allow the top and bottom frame angles of the removable sign panel to lie on a straight horizontal line.
6. Holes for mounting removable sign panel frame may be slotted 25 mm maximum parallel to the axis of the sign.
7. WT 75 x 9 may be crimped at ends to join frame angles. Fillet weld all around.

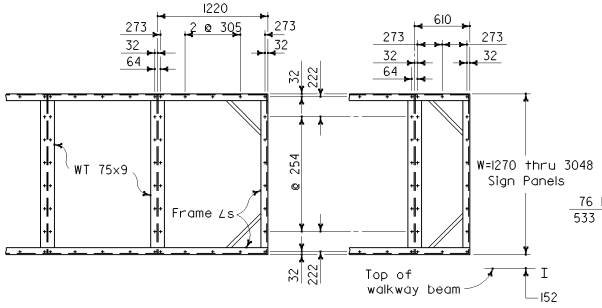

TYPICAL 1220 PANEL TYPICAL 610 PANEL

All holes 13 diameter maximum.

MOUNTING HOLE SPACING SIGN PANEL & FRAME

Hole spacing is for single sheet sign panels. For Overhead Formed Panels refer to "Overhead Formed Panel" Sheet.

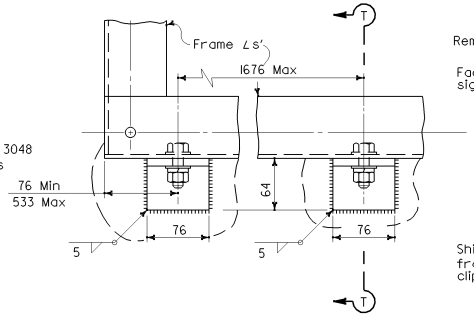

FRAME MOUNTING DETAILS

Details shown apply for sign panel frames ≤ 2540 mm deep. Mounting details for deeper panels shown on Standard Plan S22.

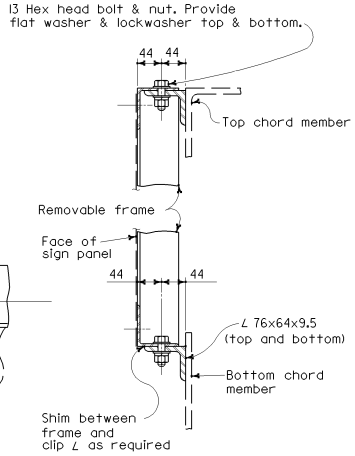

SECTION T-T

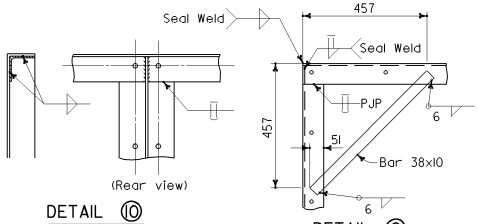

DETAIL (10) DETAIL (9)

TYPICAL JOINT DETAILS

STATE OF CALIFORNIA
DEPARTMENT OF TRANSPORTATION

OVERHEAD SIGNS
STEEL FRAMES
REMOVABLE SIGN PANEL FRAMES

NO SCALE

ALL DIMENSIONS ARE IN MILLIMETERS UNLESS OTHERWISE SHOWN

S20

Caltrans Metric

DIST	COUNTY	ROUTE	KILOMETER POST TOTAL PROJECT	SHEET NO.	TOTAL SHEETS

REGISTERED CIVIL ENGINEER

July 1, 2004
PLANS APPROVAL DATE

REGISTERED PROFESSIONAL ENGINEER Tillat Sattar No. C42892 Exp. 03-31-2006 CIVIL STATE OF CALIFORNIA

The State of California or its officers or agents shall not be responsible for the accuracy or completeness of electronic copies of this plan sheet.

To get to the Caltrans web site, go to: http://www.dot.ca.gov

07-30-04

Back to Table of Contents

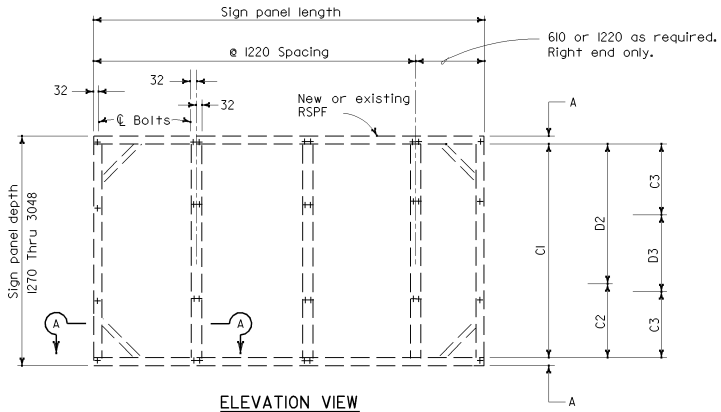

ELEVATION VIEW

NEW OR EXISTING REMOVABLE SIGN PANEL FRAME MOUNTING HOLE SPACING

PANEL DEPTH (mm)	MOUNTING BOLT SPACING						
	A	1 Space	2 Space (mm)		3 Space (mm)		
		C1	C2	D2	C3	D3	C3
1270	32	1207					
1524			730	730			
1778			476	1238			
2032			984	984			
2286			984	1238			
2540			1238	1238			
2794					984	762	984
3048	32				1238	508	1238

TABLE 1

Caltrans Metric

DIST	COUNTY	ROUTE	KILOMETER POST TOTAL PROJECT	SHEET NO.	TOTAL SHEETS

REGISTERED CIVIL ENGINEER

July 1, 2004
PLANS APPROVAL DATE

REGISTERED PROFESSIONAL ENGINEER Tiliat Sattar No. C42892 Exp. 03-31-2006 CIVIL STATE OF CALIFORNIA

The State of California or its officers or agents shall not be responsible for the accuracy or completeness of electronic copies of this plan sheet.

To get to the Caltrans web site, go to: http://www.dot.ca.gov

NOTE

Sign panel mounting holes 13 mm ø maximum for 10 mm ø bolts.

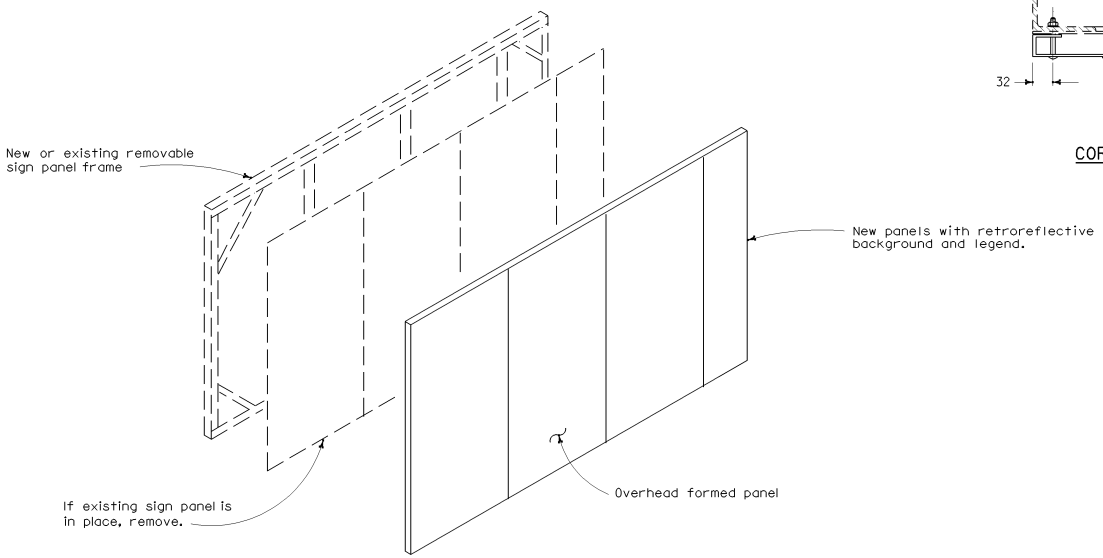

NOTE

The Contractor shall verify all dependent dimensions in the field before ordering or fabricating any material.

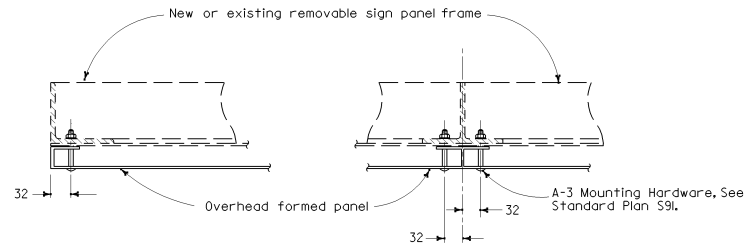

CORNER DETAIL

PANEL CONNECTION

SECTION A-A

NOTES

When constructing a new frame:

(1) Refer to Standard Plan Sheet S20 for structural details.

(2) Sign panels shall be considered as a template for drilling holes for mounting bolts.

STATE OF CALIFORNIA
DEPARTMENT OF TRANSPORTATION

OVERHEAD SIGNS
REMOVABLE SIGN PANEL FRAMES
MOUNTING DETAILS

NO SCALE

ALL DIMENSIONS ARE IN MILLIMETERS UNLESS OTHERWISE SHOWN

S21

07-30-04

Back to Table of Contents

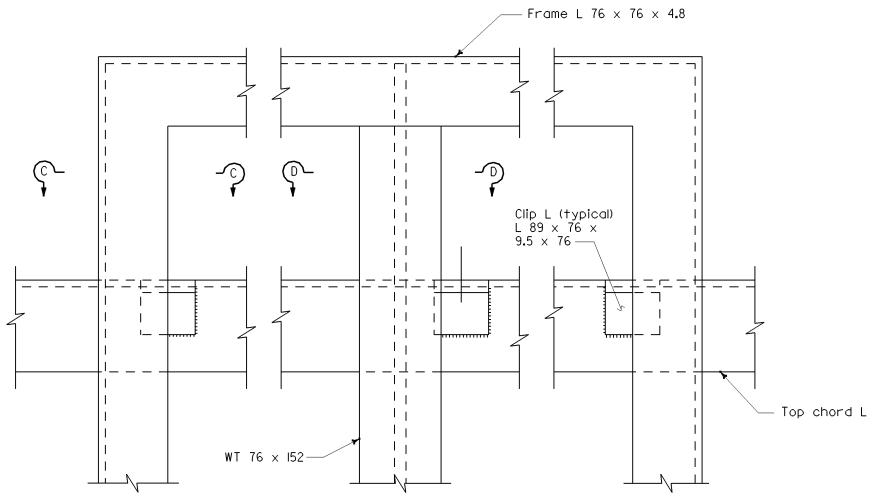

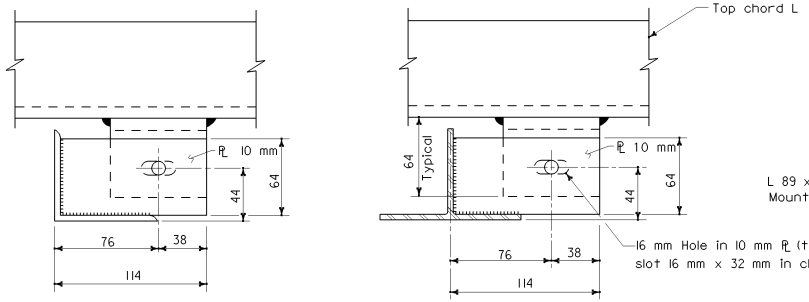

SECTION C-C SECTION D-D

ALTERNATIVE CONNECTION AT TOP CHORD

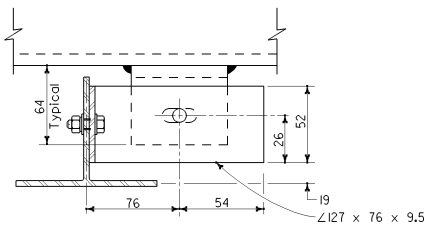

BOLTED ALTERNATIVE CONNECTION AT TOP CHORD

For details not shown, see Sections C-C and D-D.

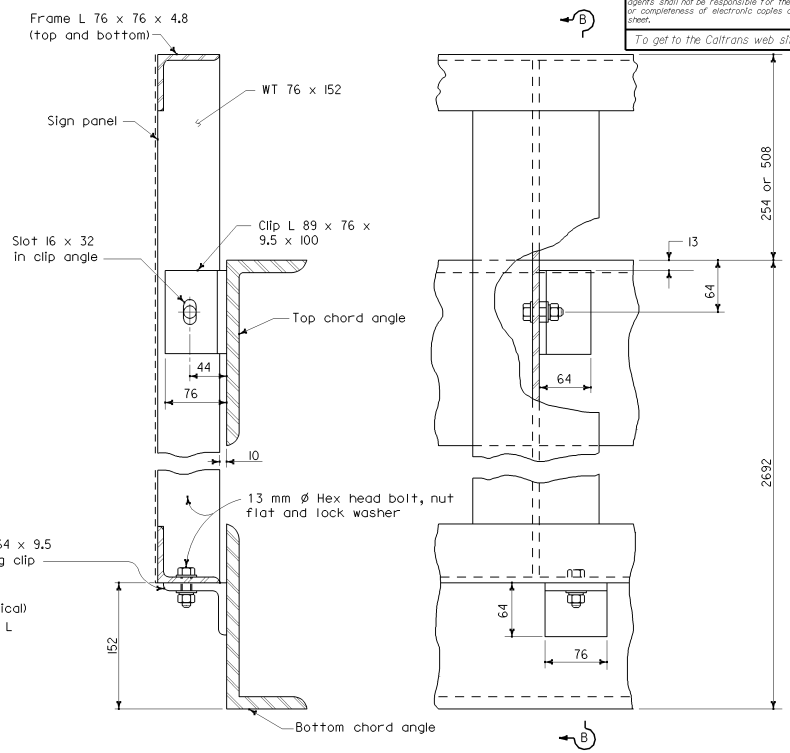

SECTION B-B ELEVATION VIEW

STEEL REMOVABLE SIGN PANEL FRAMES

DIST	COUNTY	ROUTE	KILOMETER POST TOTAL PROJECT	SHEET NO.	TOTAL SHEETS

REGISTERED CIVIL ENGINEER

July 1, 2004
PLANS APPROVAL DATE

REGISTERED PROFESSIONAL ENGINEER Tillat Sattar No. C42892 Exp. 03-31-2006 CIVIL STATE OF CALIFORNIA

The State of California or its officers or agents shall not be responsible for the accuracy or completeness of electronic copies of this plan sheet.

To get to the Caltrans web site, go to: http://www.dot.ca.gov

NOTES

1. For steel Removable Sign Panel Frame details see Standard Plan S20.
2. Minimum fillet weld is 7 for clip angles welded to chord member of truss.
3. Maximum spacing of bottom clip angle is 1676.
4. Top clips required for each vertical member or Removable Sign Panel Frame.

STATE OF CALIFORNIA
DEPARTMENT OF TRANSPORTATION

OVERHEAD SIGNS-TRUSS REMOVABLE SIGN PANEL FRAMES 2794 mm AND 3048 mm SIGN PANELS

NO SCALE

ALL DIMENSIONS ARE IN MILLIMETERS UNLESS OTHERWISE SHOWN

S22

07-30-04

Back to Table of Contents

DIST	COUNTY	ROUTE	KILOMETER POST TOTAL PROJECT	SHEET NO.	TOTAL SHEETS

REGISTERED CIVIL ENGINEER

July 1, 2004
PLANS APPROVAL DATE

REGISTERED PROFESSIONAL ENGINEER
Tiliat Sattar
No. C42892
Exp. 03-31-2006
CIVIL
STATE OF CALIFORNIA

The State of California or its officers or agents shall not be responsible for the accuracy or completeness of electronic copies of this plan sheet.

To get to the Caltrans web site, go to: http://www.dot.ca.gov

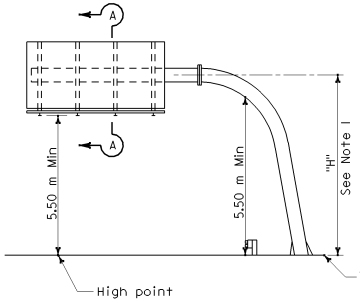

SLANTED SINGLE POST TYPE

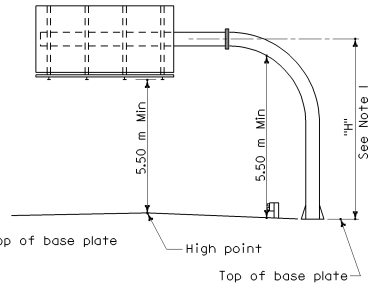

VERTICAL SINGLE POST TYPE

INSTRUCTIONS TO FABRICATOR

Format sheet shows:

1. Sign structure location.
2. Length of structure span.
3. Panel size and location on structure.
4. Post height to bottom of panel or mast arm elevation.
5. Base plate elevation.
6. Photoelectric unit location if required.
7. Walkway location.

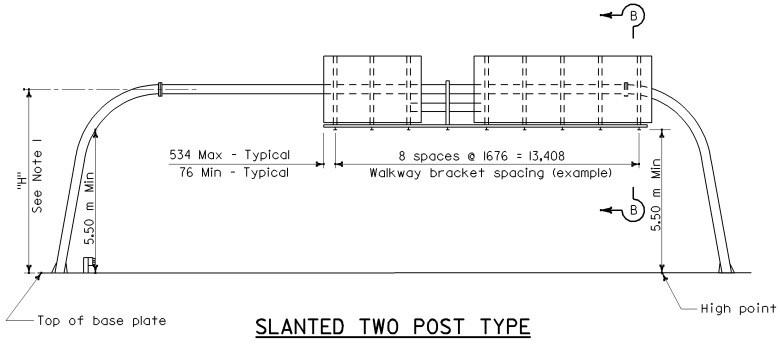

SLANTED TWO POST TYPE

WALKWAY BRACKETS:

Maintain uniform spacing where possible. Maximum spacing shall not exceed 1.68 m Minimum clear to field splice = 305 mm ±

WALKWAY AND SAFETY RAILING:

Walkway to extend full length of sign area and be continuous between signs. Extend walkway to edge of pavement if required. Safety railing to protect entire walkway.

PHOTOELECTRIC UNIT:

Place behind sign panel nearest right shoulder unless otherwise shown on format sheet.

SPECIFICATIONS

DESIGN:

AASHTO Specifications for Structural Supports for Highway Signs, Luminaires and Traffic Signals, dated 2001.

CONSTRUCTION:

Standard Specifications and the Special Provisions.

LOADING:

WIND LOADING:

Normal to face of sign: 1930 Pa on 100% panel coverage.

Transverse to face of sign: 20% of normal force.

WALKWAY LOADING:

Dead load +229 kg concentrated live load.

UNIT STRESSES:

STRUCTURAL STEEL: fy = 250 MPa
REINFORCED CONCRETE: fy = 415 MPa
f'c = 28 MPa
FOOTING SOIL PRESSURE: 120 kPa (spread footing)

MINIMUM CLEARANCE

Vertical roadway clearance 5.50 m above roadway and shoulders

WELDING:

All welding continuous unless otherwise noted on the plans.

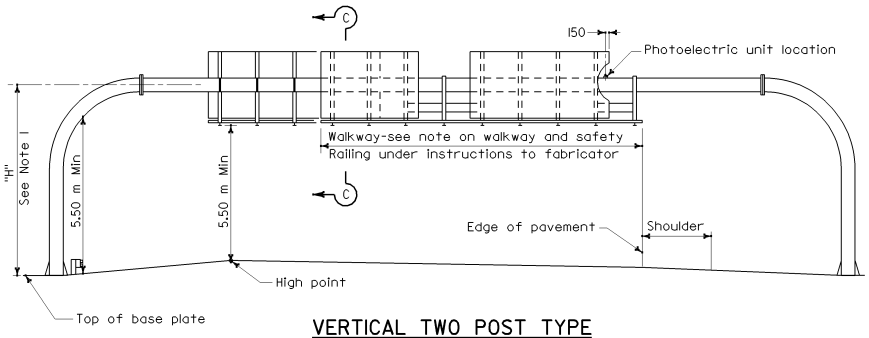

VERTICAL TWO POST TYPE

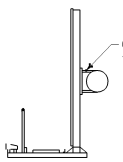

SECTION A-A

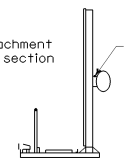

SECTION B-B

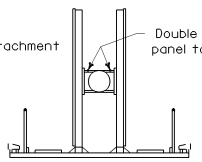

SECTION C-C

NOTES

1. Maximum post height = 7.3 m + sign panel depth/2.
2. For walkway details, see Standard Plan S16.
3. For safety railing and cable details, see Standard Plan S18.

STATE OF CALIFORNIA
DEPARTMENT OF TRANSPORTATION

OVERHEAD SIGNS-TUBULAR INSTRUCTIONS AND EXAMPLES

NO SCALE

ALL DIMENSIONS ARE IN MILLIMETERS UNLESS OTHERWISE SHOWN

S30

07-30-04

Back to Table of Contents

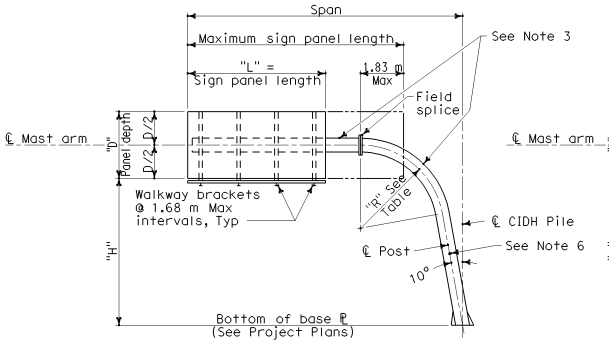

SLANTED POST CANTILEVER

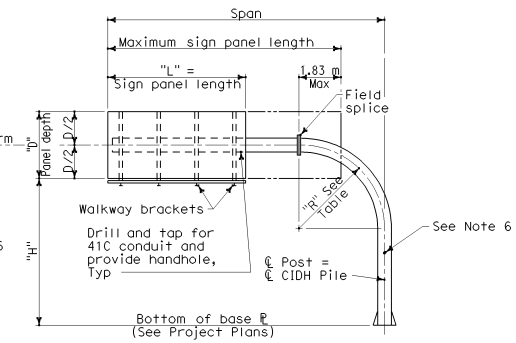

VERTICAL POST CANTILEVER

"D" (mm) Panel Depth	"D" (m) Panel Depth	"H" (m) Post Height	POST TYPE # FOR SPANS OF CANTILEVER																		
			11.59 m span Col #	11.28 m span Col #	10.98 m span Col #	10.67 m span Col #	10.37 m span Col #	10.06 m span Col #	9.76 m span Col #	9.45 m span Col #	9.15 m span Col #	8.84 m span Col #	8.54 m span Col #	8.23 m span Col #	7.93 m span Col #	7.62 m span Col #	7.32 m span Col #	7.01 m span Col #	6.71 m span Col #	6.40 m span Col #	6.10 m span Col #
3048	3.05	8.84	-	-	-	-	-	-	-	5	4	4	4	4	4	3	3	3	3	2	2
3048	3.05	8.23	-	-	-	-	-	-	-	4	4	4	4	4	3	3	3	3	2	2	2
3048	3.05	7.62	-	-	-	-	-	-	-	4	4	4	4	3	3	3	3	2	2	2	2
3048	3.05	7.01	-	-	-	-	-	-	-	4	4	4	3	3	3	3	2	2	2	2	2
3048	3.05	6.40	-	-	-	-	-	-	-	4	3	3	3	3	3	2	2	2	2	2	2
2794	2.79	8.84	-	-	-	-	-	-	4	4	4	4	4	4	3	3	3	3	2	2	2
2794	2.79	8.23	-	-	-	-	-	-	4	4	4	4	4	3	3	3	3	2	2	2	2
2794	2.79	7.62	-	-	-	-	-	-	4	4	4	4	3	3	3	3	2	2	2	2	2
2794	2.79	7.01	-	-	-	-	-	-	4	4	3	3	3	3	3	2	2	2	2	2	2
2794	2.79	6.40	-	-	-	-	-	-	4	3	3	3	3	2	2	2	2	2	2	2	1
2540	2.54	8.84	-	-	-	-	5	4	4	4	4	4	3	3	3	3	2	2	2	2	2
2540	2.54	8.23	-	-	-	-	4	4	4	4	4	3	3	3	3	3	2	2	2	2	2
2540	2.54	7.62	-	-	-	-	4	4	4	4	3	3	3	3	3	2	2	2	2	2	2
2540	2.54	7.01	-	-	-	-	4	4	4	3	3	3	3	2	2	2	2	2	2	2	1
2540	2.54	6.40	-	-	-	-	4	4	3	3	3	3	2	2	2	2	2	2	2	1	1
2286	2.29	8.84	-	-	5	5	4	4	4	4	4	3	3	3	3	2	2	2	2	2	2
2286	2.29	8.23	-	-	4	4	4	4	4	4	3	3	3	3	2	2	2	2	2	2	2
2286	2.29	7.62	-	-	4	4	4	4	4	3	3	3	3	2	2	2	2	2	2	2	1
2286	2.29	7.01	-	-	4	4	4	4	3	3	3	3	2	2	2	2	2	2	2	1	1
2286	2.29	6.40	-	-	4	4	4	3	3	3	3	2	2	2	2	2	2	2	1	1	1
2032	2.03	8.84	-	4	4	4	4	4	4	3	3	3	3	3	3	2	2	2	2	2	1
2032	2.03	8.23	-	4	4	4	4	4	3	3	3	3	3	2	2	2	2	2	2	1	1
2032	2.03	7.62	-	4	4	4	4	3	3	3	3	3	2	2	2	2	2	2	1	1	1
2032	2.03	7.01	-	4	4	4	3	3	3	3	3	2	2	2	2	2	2	2	1	1	1
2032	2.03	6.40	-	4	4	4	3	3	3	3	2	2	2	2	2	2	2	1	1	1	1
1778	1.78	8.84	4	4	4	4	4	3	3	3	3	3	2	2	2	2	2	2	2	1	1
1778	1.78	8.23	4	4	4	4	4	3	3	3	3	2	2	2	2	2	2	2	1	1	1
1778	1.78	7.62	4	4	4	4	3	3	3	3	3	2	2	2	2	2	2	1	1	1	1
1778	1.78	7.01	4	4	4	3	3	3	3	2	2	2	2	2	2	2	1	1	1	1	1
1778	1.78	6.40	4	4	3	3	3	3	2	2	2	2	2	2	2	1	1	1	1	1	1
1524	1.52	8.84	4	4	4	4	3	3	3	3	2	2	2	2	2	2	2	1	1	1	1
1524	1.52	8.23	4	4	4	4	3	3	3	2	2	2	2	2	2	2	1	1	1	1	1
1524	1.52	7.62	4	4	3	3	3	3	2	2	2	2	2	2	2	1	1	1	1	1	1
1524	1.52	7.01	4	3	3	3	3	3	2	2	2	2	2	2	2	1	1	1	1	1	1
1524	1.52	6.40	3	3	3	3	3	2	2	2	2	2	2	2	1	1	1	1	1	1	1
1270	1.27	8.84	4	3	3	3	3	3	2	2	2	2	2	2	2	1	1	1	1	1	1
1270	1.27	8.23	4	3	3	3	3	2	2	2	2	2	2	2	1	1	1	1	1	1	1
1270	1.27	7.62	3	3	3	3	3	2	2	2	2	2	2	2	1	1	1	1	1	1	1
1270	1.27	7.01	3	3	3	2	2	2	2	2	2	2	2	1	1	1	1	1	1	1	1
1270	1.27	6.40	3	3	2	2	2	2	2	2	2	2	1	1	1	1	1	1	1	1	1

Caltrans Metric

DIST	COUNTY	ROUTE	KILOMETER POST TOTAL PROJECT	SHEET NO.	TOTAL SHEETS

REGISTERED CIVIL ENGINEER

July 1, 2004
PLANS APPROVAL DATE

REGISTERED PROFESSIONAL ENGINEER
Tillat Sattar
No. C42892
Exp. 03-31-2006
CIVIL
STATE OF CALIFORNIA

The State of California or its officers or agents shall not be responsible for the accuracy or completeness of electronic copies of this plan sheet.

To get to the Caltrans web site, go to: http://www.dot.ca.gov

NOTES

1. The maximum sign panel overlap onto the post elbow shall not exceed 1.83 m from the field splice.
2. When several sign panels are to be installed with a space between the panels, the space shall be as small as possible and 610 mm maximum.
3. All posts between base plate and field splice are extra strong pipe. All mast arms are standard pipe.
4. During sign erection the post shall be raked as necessary with the use of leveling nuts to level the sign panel.
5. At final position of post all top and bottom anchor bolt nuts shall be snug tighten against base plate.
6. Drill and tap for 41C chase nipple and plug with recessed pipe plugs. Place perpendicular to sign panel axis and away from approaching traffic. See Standard Plan ES-15C.
7. NPS - Nominal Pipe Size.
8. Post type # in Roman or Numerical implies the same specification of pipe post.

Post type #	Specification of pipe post	"R" radius (mm)	kg/m
I	pipe NPS 20 x 12.7 tk	3658	154.9
II	pipe NPS 24 x 12.7 tk	3658	186.8
III	pipe NPS 24 x 15.9 tk	3658	232.2
IV	pipe NPS 30 x 12.7 tk	3658	234.5
V	pipe NPS 30 x 15.9 tk	3658	291.7
VI	pipe NPS 30 x 19.05 tk	3658	348.2

STATE OF CALIFORNIA
DEPARTMENT OF TRANSPORTATION

OVERHEAD SIGNS-TUBULAR SINGLE POST TYPE LAYOUT AND PIPE SELECTION

NO SCALE

ALL DIMENSIONS ARE IN MILLIMETERS UNLESS OTHERWISE SHOWN

S31

08-05-04

Back to Table of Contents

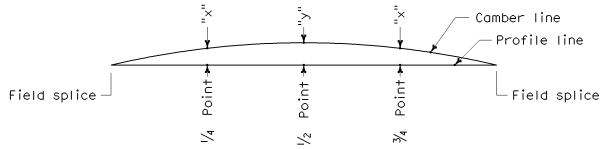

CAMBER DIAGRAM

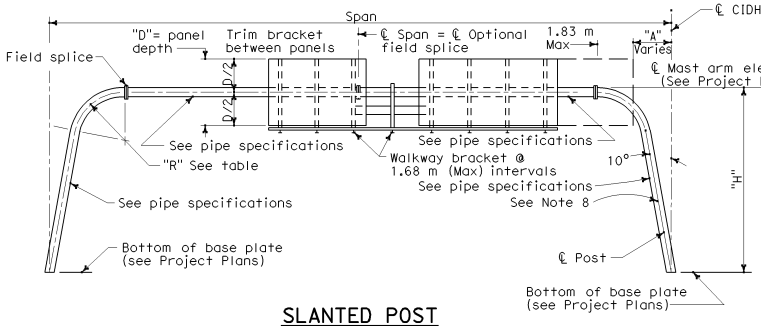

SLANTED POST

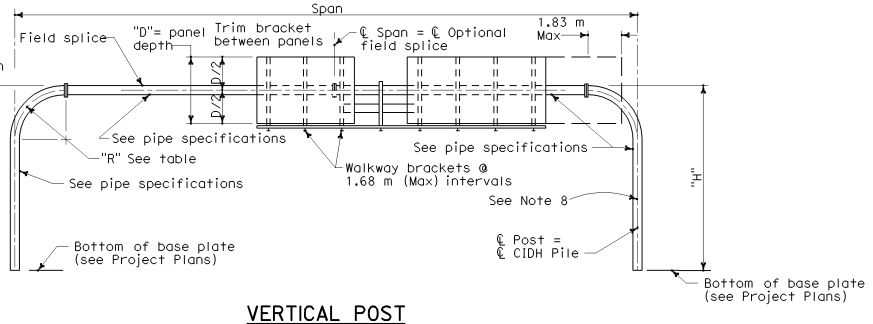

VERTICAL POST

TABLE A

"D" (mm) Panel Depth	"D" (m) Panel Depth	"H" (m) Post Height	POST TYPE # FOR SPAN LENGTH BELOW									
			42.68 m to 44.21 m	39.63 m to 42.38 m	36.59 m to 39.33 m	33.54 m to 36.28 m	30.49 m to 33.23 m	27.44 m to 30.18 m	24.39 m to 27.13 m	21.34 m to 24.09 m	18.29 m to 21.04 m	15.24 m to 17.99 m
3048	3.05	8.84	6	6	6	6	5	5	4	3	3	2
3048	3.05	8.23	6	6	6	5	5	4	4	3	2	2
3048	3.05	7.62	6	6	5	5	4	4	3	3	2	2
3048	3.05	7.01	6	5	5	4	4	4	3	2	2	1
3048	3.05	6.40	5	5	4	4	4	3	3	2	2	1
2794	2.79	8.84	6	6	6	5	5	4	4	3	2	2
2794	2.79	8.23	6	6	5	5	4	4	3	3	2	2
2794	2.79	7.62	5	5	5	4	4	4	3	2	2	1
2794	2.79	7.01	5	5	4	4	4	3	3	2	2	1
2794	2.79	6.40	5	5	4	4	3	3	2	2	2	1
2540	2.54	8.84	6	5	5	5	4	4	3	3	2	2
2540	2.54	8.23	5	5	5	4	4	4	3	2	2	1
2540	2.54	7.62	5	5	4	4	4	3	3	2	2	1
2540	2.54	7.01	5	4	4	4	3	3	2	2	2	1
2540	2.54	6.40	5	4	4	3	3	2	2	2	1	1
2286	2.29	8.84	5	5	5	4	4	3	3	2	2	1
2286	2.29	8.23	5	5	4	4	4	3	2	2	2	1
2286	2.29	7.62	4	4	4	4	3	3	2	2	1	1
2286	2.29	7.01	4	4	4	3	3	2	2	2	1	1
2286	2.29	6.40	4	4	3	3	2	2	2	1	1	1
2032	2.03	8.84	5	4	4	4	3	3	2	2	2	1
2032	2.03	8.23	4	4	4	3	3	2	2	2	1	1
2032	2.03	7.62	4	4	4	3	3	2	2	2	1	1
2032	2.03	7.01	4	4	3	3	2	2	2	1	1	1
2032	2.03	6.40	4	3	3	2	2	2	1	1	1	1
1778	1.78	8.84	4	4	4	3	3	2	2	2	1	1
1778	1.78	8.23	4	4	3	3	2	2	2	1	1	1
1778	1.78	7.62	3	3	3	2	2	2	2	1	1	1
1778	1.78	7.01	3	3	2	2	2	2	1	1	1	1
1778	1.78	6.40	3	3	2	2	2	1	1	1	1	1

NOTES

1. The maximum sign panel overlap onto elbow shall not exceed 1.83 m from the field splice.
2. When several sign panels are to be installed with spaces between panels, the total sign panel length is the sum of individual sign panel lengths only.
3. For spans ranging from 15.24 m to 44.20 m, maximum sign panel coverage is as follows:

   a) For slanted post type: Span - "A" on both sides from ℄ of CIDH Pile.

   b) For vertical post type: Span - 1.83 m on both sides from ℄ of CIDH Pile.
4. All posts between base plate and field plate splice shall be as scheduled in table. All mast arms are standard pipe.
5. Before any portion of sign frame is assembled in its final position, the Contractor shall demonstrate to the Engineer by preassembly or other approved methods that the span length of the frame, with no load condition, is within ±13 mm of field measured span length between foundations.
6. If sign frames are erected as one unit, they shall be adequately suspended to avoid distortions or changes in span lengths between base plates.
7. At final position of post, all top and bottom anchor bolt nuts shall be snug tighten against base plate.
8. Drill and tap for 41C chase nipple and plug with recessed pipe plugs. Place perpendicular to sign panel axis and away from approaching traffic. See Standard Plan ES-15C.
9. Maximum difference between post heights on an individual frame = 1.5 m.
10. For standard pipe members(mast arms) with lengths greater than 24 m, an optional field splice will be permitted at the centerline of span to facilitate hauling operations.
11. NPS = Nominal Pipe Size.
12. R = Radius of 90° elbow.
13. Post type numbers (#) shown in Table A equate to the Roman Numeral post type numbers shown in Tables B and C,same specification of pipe post.
14. Gap tolerance in between field splices: i.e. if mast arm spool piece is too short. One filler piece in between field shall not exceed 19 mm and bolt tightening according to AISC 9th Edition, TABLE 4, page 5-274.

TABLE B

(See Notes 11 and 12)

Post Type #	Specification of pipe post	"R" radius (mm)	kg/m
I	pipe NPS 20 x 12.7 tk	3658	154.9
II	pipe NPS 24 x 12.7 tk	3658	186.8
III	pipe NPS 24 x 15.9 tk	3658	232.2
IV	pipe NPS 30 x 12.7 tk	3658	234.5
V	pipe NPS 30 x 15.9 tk	3658	291.7
VI	pipe NPS 30 x 19.05 tk	3658	348.2

TABLE C

CAMBER			
Post type #	Span length (m)	X (mm)	Y (mm)
II	15.24 to 36.3	57	89
II	36.6 to 44.2	95	127
III	15.24 to 36.3	57	89
III	36.6 to 44.2	95	127
IV	15.24 to 36.3	57	89
IV	36.6 to 44.2	95	127
V	15.24 to 36.3	57	89
V	36.6 to 44.2	95	127
VI	15.24 to 36.3	57	89
VI	36.6 to 44.2	95	127

Caltrans Metric

DIST	COUNTY	ROUTE	KILOMETER POST TOTAL PROJECT	SHEET NO.	TOTAL SHEETS

REGISTERED CIVIL ENGINEER

July 1, 2004
PLANS APPROVAL DATE

REGISTERED PROFESSIONAL ENGINEER Tiliat Sattar No. C42892 Exp. 03-31-2006 CIVIL STATE OF CALIFORNIA

The State of California or its officers or agents shall not be responsible for the accuracy or completeness of electronic copies of this plan sheet.

To get to the Caltrans web site, go to: http://www.dot.ca.gov

STATE OF CALIFORNIA
DEPARTMENT OF TRANSPORTATION

OVEREHEAD SIGNS-TUBULAR TWO POST TYPE LAYOUT AND PIPE SELECTION

NO SCALE

ALL DIMENSIONS ARE IN MILLIMETERS UNLESS OTHERWISE SHOWN

S32

07-30-04

Back to Table of Contents

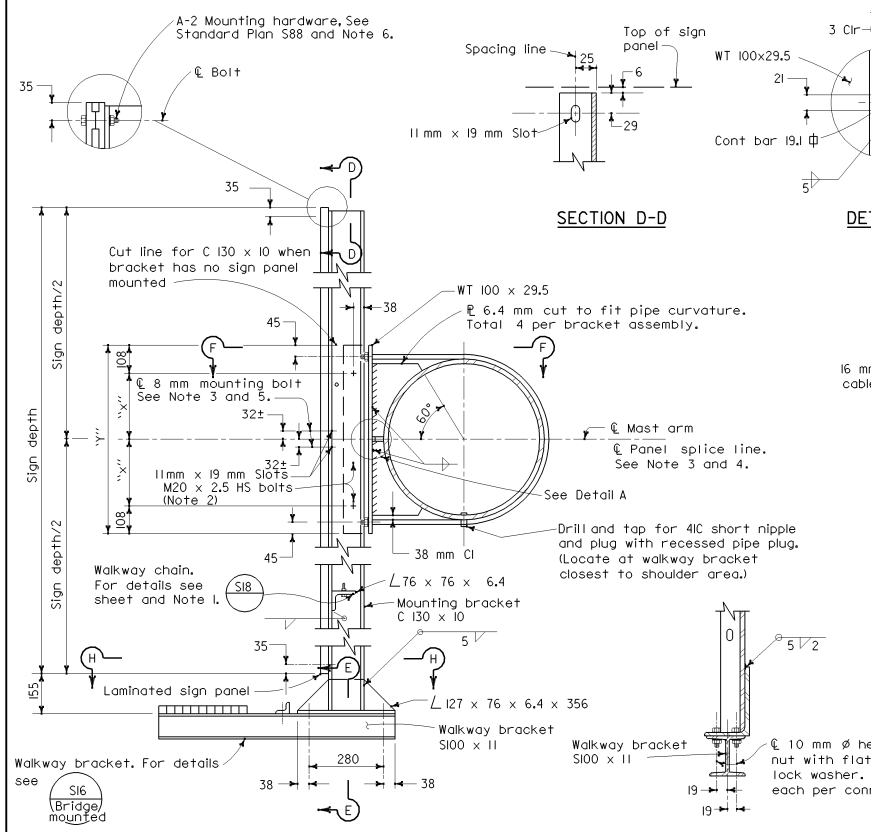

SINGLE PANEL

SECTION D-D

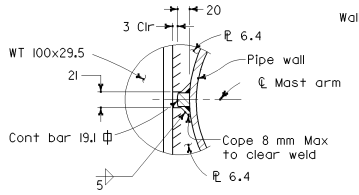

DETAIL A

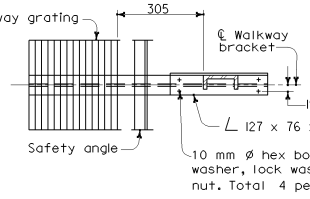

SECTION H-H

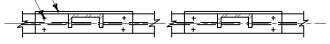

SECTION J-J

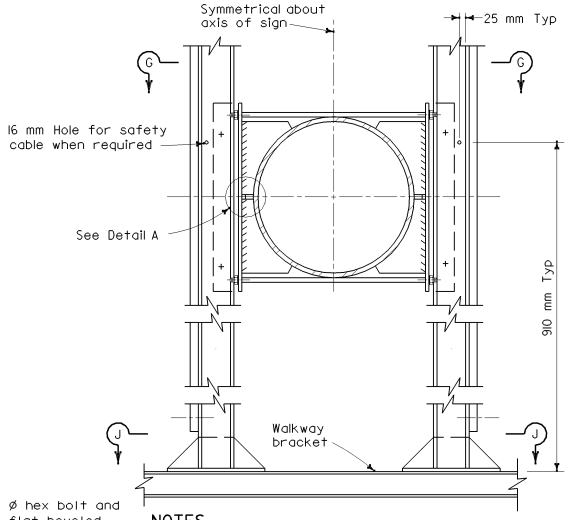

DOUBLE PANEL

SECTION E-E

MOUNTING BRACKET ASSEMBLY DETAILS

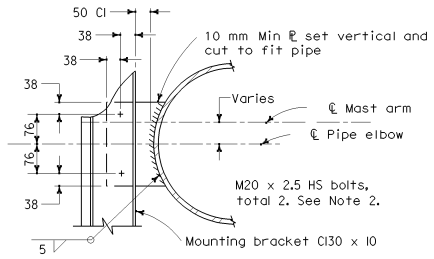

DETAIL B

Mounting bracket on elbow

Pipe Size NPS \ Distance	"X" (mm)	"Y" (mm)
20	200	616
24	251	718
30	327	870

NOTES

For details not shown or noted see "Single Panel". Assembly details shown apply to tangent portion of pipe only. For mounting bracket on elbow see Detail B.

NOTES

1. The exterior mounting brackets to face outward to accommodate the walkway chain angle.
2. Splice line not necessarily ℄ mast arm. Exact location is dependent on sign panel manufacturer.
3. Install aluminum "H" Section closure extrusions at vertical and horizontal sign panel splice lines.
4. Drill through panel at integral track. Install elevator bolt with interstate green finish on head. Typical at panel splice.
5. Remove reflector. Drill through panel at integral track. Install elevator head bolt and attach reflector. Typical at border.

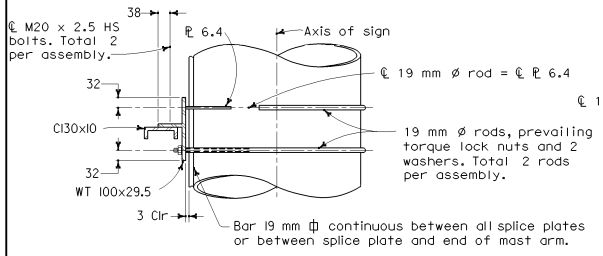

SECTION F-F

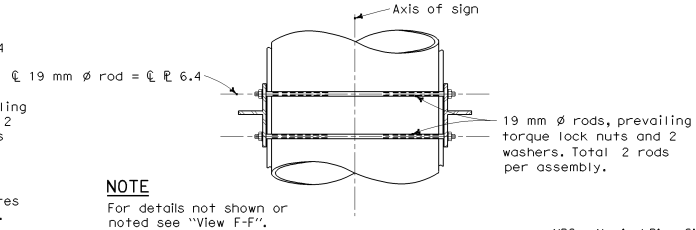

NOTE

For details not shown or noted see "View F-F".

SECTION G-G

NPS = Nominal Pipe Size

STATE OF CALIFORNIA
DEPARTMENT OF TRANSPORTATION

OVERHEAD SIGNS-TUBULAR STRUCTURAL FRAME DETAILS No. 1

NO SCALE

ALL DIMENSIONS ARE IN MILLIMETERS UNLESS OTHERWISE SHOWN

S33

DIST	COUNTY	ROUTE	KILOMETER POST TOTAL PROJECT	SHEET NO.	TOTAL SHEETS

REGISTERED CIVIL ENGINEER

July 1, 2004
PLANS APPROVAL DATE

REGISTERED PROFESSIONAL ENGINEER Tillat Sattar No. C42892 Exp. 03-31-2006 CIVIL STATE OF CALIFORNIA

The State of California or its officers or agents shall not be responsible for the accuracy or completeness of electronic copies of this plan sheet.

To get to the Caltrans web site, go to: http://www.dot.ca.gov

08-02-04

Back to Table of Contents

Caltrans Metric

DIST	COUNTY	ROUTE	KILOMETER POST TOTAL PROJECT	SHEET NO.	TOTAL SHEETS

REGISTERED CIVIL ENGINEER

July 1, 2004
PLANS APPROVAL DATE

REGISTERED PROFESSIONAL ENGINEER Tiliat Sattar No. C42892 Exp. 03-31-2006 CIVIL STATE OF CALIFORNIA

The State of California or its officers or agents shall not be responsible for the accuracy or completeness of electronic copies of this plan sheet.

To get to the Caltrans web site, go to: http://www.dot.ca.gov

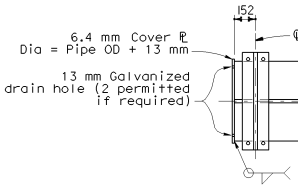

MAST ARM END DETAIL

(For "Single Post Type" only)

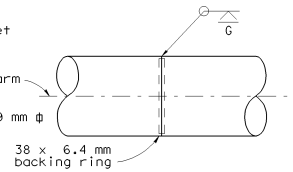

SHOP SPLICE

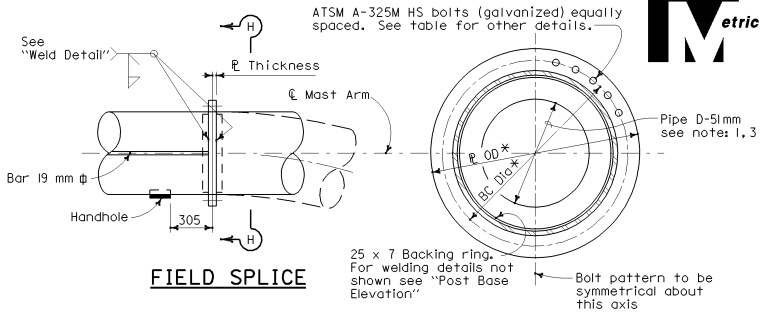

FIELD SPLICE

SECTION H-H

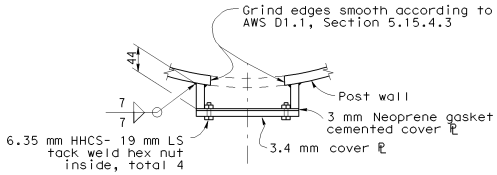

PLAN

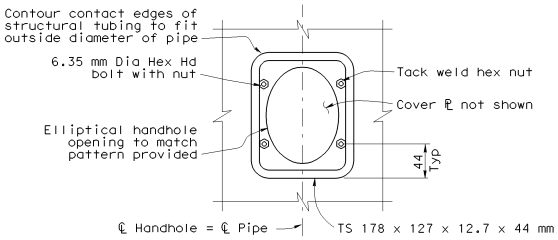

ELEVATION

DETAILS OF LOWER HANDHOLE & COVER

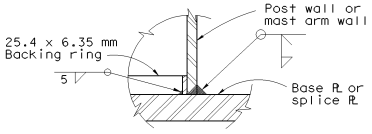

WELD DETAIL

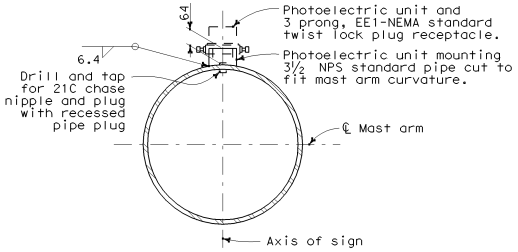

PHOTOELECTRIC UNIT DETAILS

(See "Layout" sheet for location when required)

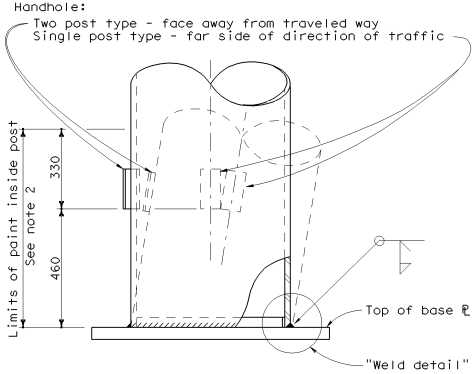

POST BASE ELEVATION

(For base ℞ details see "Basic Plate and Anchorage Detail" sheet)

FIELD SPLICE TABLE

Pipe Dia NPS	℞ OD (mm) *	℞ Thickness (mm)	BC Dia (mm) *	HS Bolts
20	686	35	610	22-M24x3
24	788	38	711	26-M24x3
30	940	41.3	864	34-M24x3

NOTE

Design based on capacity of standard pipe.

NOTES

1. Place single thin bead of silicone caulking compound around hole prior to bolting. Caulking not to interfere with friction between plates in bolted area.
2. Prime and paint post interior from base ℞ to 150 mm above lower handhole unless post is galvanized.
3. "D" is inside diameter of "extra strong pipe".
4. Field splice diameters marked "*" may be increased 51 mm to facilitate bolting.

NPS = Nominal Pipe Size.

STATE OF CALIFORNIA
DEPARTMENT OF TRANSPORTATION

OVERHEAD SIGNS-TUBULAR STRUCTURAL FRAME DETAILS No. 2

NO SCALE

ALL DIMENSIONS ARE IN MILLIMETERS UNLESS OTHERWISE SHOWN

S34

08-02-04

Back to Table of Contents

SINGLE POST AND TWO POST TABLE

Post Type	Nominal Pipe Size (NPS)	Pipe Thickness (mm)	Base ℄ OD & Thickness (mm)	Anchor: Bolt Circle (mm)	Anchor: Bolts Total and Dia (mm)	CIDH: Pile Dia (mm)	CIDH: Pile Depth (mm)	CIDH Vertical Reinforcing: Total	CIDH Vertical Reinforcing: Bar Size	CIDH Vertical Reinforcing: Bar Circle (mm)	CIDH Spiral: Bar Size	CIDH Spiral: Pitch (mm)
I	20	12.7	915 x 64	762	14-51	1524	7620	28	36	1305	16	89
II	24	12.7	1041 x 64	864	14-64	1524	7620	28	36	1305	16	89
III	24	15.9	1041 x 64	864	14-64	1524	7620	28	36	1305	16	89
IV	30	12.7	1194 x 64	1016	16-64	1524	10058	28	36	1305	16	89
V	30	15.9	1194 x 64	1016	16-64	1524	10058	28	36	1305	16	89
VI	30	19.05	1194 x 76	1016	16-64	1524	10058	28	36	1305	16	89

Caltrans Metric

DIST	COUNTY	ROUTE	KILOMETER POST TOTAL PROJECT	SHEET NO.	TOTAL SHEETS

REGISTERED CIVIL ENGINEER

July 1, 2004
PLANS APPROVAL DATE

REGISTERED PROFESSIONAL ENGINEER Tillat Sattar No. C42892 Exp. 03-31-2006 CIVIL STATE OF CALIFORNIA

The State of California or its officers or agents shall not be responsible for the accuracy or completeness of electronic copies of this plan sheet.

To get to the Caltrans web site, go to: http://www.dot.ca.gov

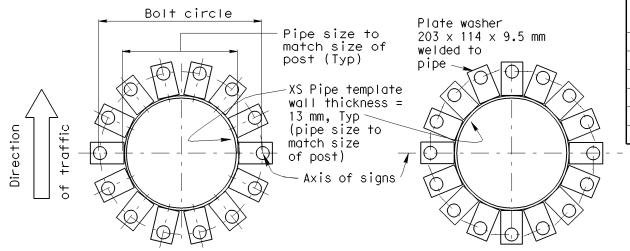

ANCHOR BOLT TEMPLATE

Template to match base plate anchor bolt layouts. (Option: Plate washer can be substituted by one ring plate shown in 14 bolt template)

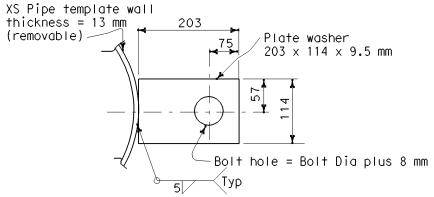

PLATE WASHER FOR 14 AND 16 BOLTS PATTERN

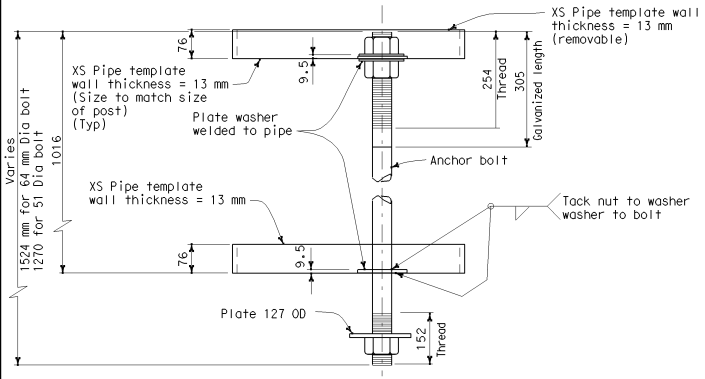

ANCHOR BOLT TEMPLATE PLATE WASHER TYPE

One bolt shown only other bolts not shown.

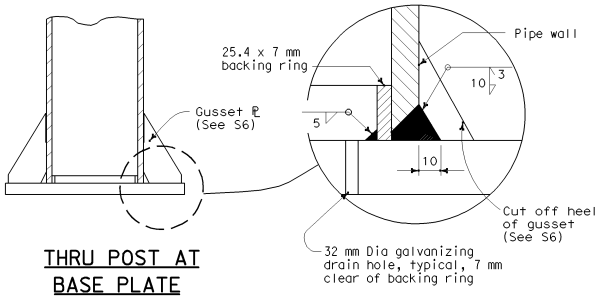

THRU POST AT BASE PLATE

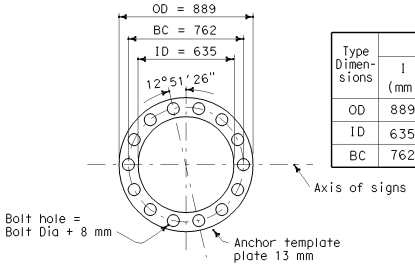

14 BOLTS

Type I shown

Type Dimensions	Post Type No. I (mm)	II to III (mm)	IV to VI (mm)
OD	889	1022	1175
ID	635	705	857
BC	762	864	1016

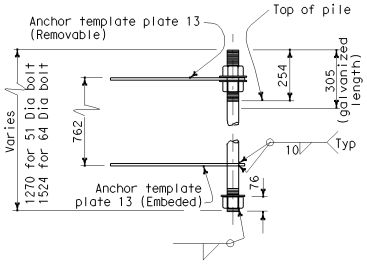

ANCHOR BOLT TEMPLATE RING PLATE TYPE

One bolt shown only other bolts not shown.

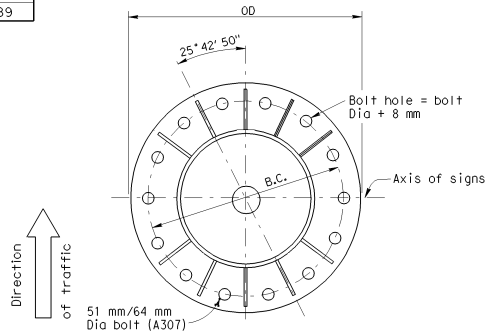

14 BOLTS

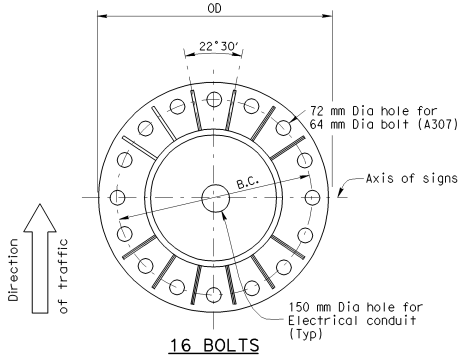

16 BOLTS

SINGLE AND TWO POST TYPE BASE PLATE DETAILS

STATE OF CALIFORNIA
DEPARTMENT OF TRANSPORTATION

OVERHEAD SIGNS-TUBULAR SINGLE AND TWO POST TYPE BASE PLATE AND ANCHORAGE DETAILS

NO SCALE

ALL DIMENSIONS ARE IN MILLIMETERS UNLESS OTHERWISE SHOWN

S35

08-05-04

Back to Table of Contents

DIST	COUNTY	ROUTE	KILOMETER POST TOTAL PROJECT	SHEET NO.	TOTAL SHEETS

Caltrans Metric

REGISTERED CIVIL ENGINEER

July 1, 2004
PLANS APPROVAL DATE

REGISTERED PROFESSIONAL ENGINEER
Tiliat Sattar
No. C42892
Exp. 03-31-2006
CIVIL
STATE OF CALIFORNIA

The State of California or its officers or agents shall not be responsible for the accuracy or completeness of electronic copies of this plan sheet.

To get to the Caltrans web site, go to: http://www.dot.ca.gov

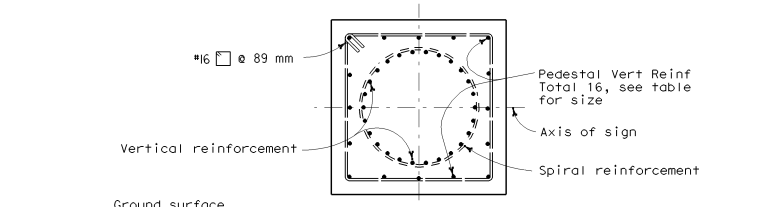

SECTION B-B

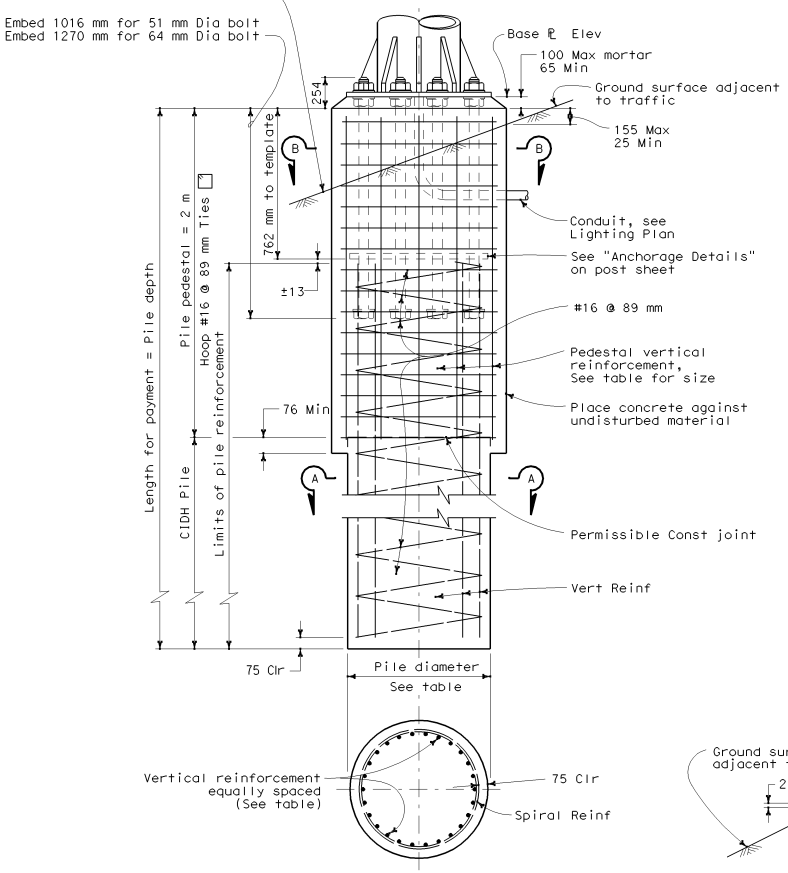

SECTION A-A

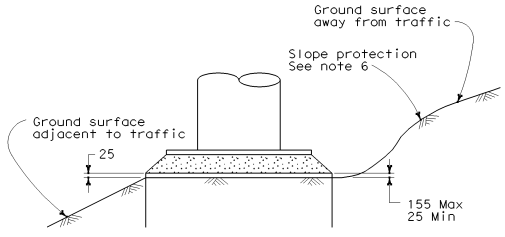

DETAIL C

Post Type No.	Anchor Bolts			Square Pedestal							CIDH						
						Reinforcing			Hoop			**	Vertical Reinforcing			Spiral	
	Bolt Circle (mm)	Bolts total and Dia (mm)	Total Length (mm)	Pedestal Square one side (mm)	Pedestal Depth (mm)	Total	Bar Size	# of bars each face	Bar Size	Pitch (mm)	Pile Dia (mm)	Pile Depth (m)	Total	Bar Size	Bar Circle (mm)	Bar Size	Pitch (mm)
I	762	14-50.8	1270	1676	1981	16	#36	5	#16	89	1524	7620	28	#36	1305	#16	89
II	864	14-63.5	1524	1676	1981	16	#36	5	#16	89	1524	7620	28	#36	1305	#16	89
III	864	14-63.5	1524	1676	1981	16	#36	5	#16	89	1524	7620	28	#36	1305	#16	89
IV	1016	16-63.5	1524	1676	1981	16	#36	5	#16	89	1524	10058	28	#36	1305	#16	89
V	1016	16-63.5	1524	1676	1981	16	#36	5	#16	89	1524	10058	28	#36	1305	#16	89
VI	1016	16-63.5	1524	1676	1981	16	#36	5	#16	89	1524	10058	28	#36	1305	#16	89

** Use Foundation Depth shown in table unless otherwise shown on the Project Plans.

NOTES

1. For anchor bolt layout see post sheet.
2. For "Base ℄ elevation" see Project Plans.
3. Pedestals and base plates, longer sides shall be normal to axis of sign.
4. Prior to erection of the post, backfill which is equivalent to the surrounding material, shall be in place.
5. Pedestal shall be formed 150 mm minimum below ground surface Remainder to be placed against undisturbed material.
6. Slope protection required when indicated on the Project Plans.
7. Foundation design is based on 2001 ASSHTO article 13.6 Broms' approximate procedure assuming a cohesionless material. The angle of internal friction Dia used is 30° and unit weight of soil used is 1922 kg/m³.

STATE OF CALIFORNIA
DEPARTMENT OF TRANSPORTATION

OVERHEAD SIGNS-TUBULAR SINGLE POST AND TWO POST TYPE SQUARE PEDESTAL PILE FOUNDATION

NO SCALE

ALL DIMENSIONS ARE IN MILLIMETERS UNLESS OTHERWISE SHOWN

S36

08-05-04

Back to Table of Contents

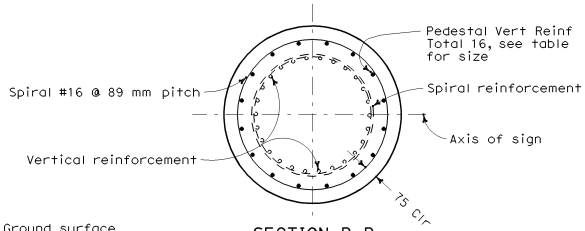

SECTION B-B

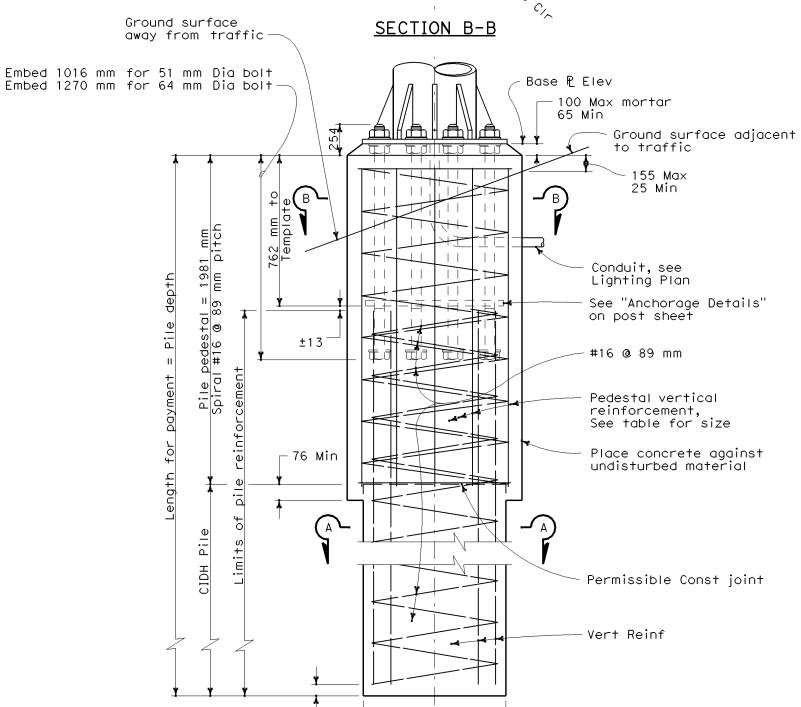

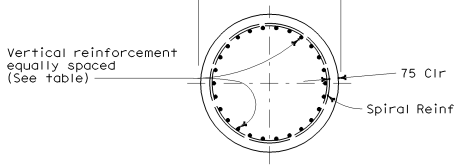

SECTION A-A

Post Type No.	Anchor Bolts			Round Pedestal							CIDH						
						Reinforcing			Hoop			**	Vertical Reinforcing			Spiral	
	Bolt Circle (mm)	Bolts Total & Dia (mm)	Total Length (mm)	Pedestal Dia (mm)	Pedestal Depth (mm)	Total	Bar Size	Loop Circle (mm)	Bar Size	Pitch (mm)	Pile Dia (mm)	Pile Depth (mm)	Total	Bar Size	Bar Circle (mm)	Bar Size	Pitch (mm)
I	762	14-50.8	1270	1676	1981	16	#36	1435	#16	89	1524	7620	28	#36	1305	#16	89
II	864	14-63.5	1524	1676	1981	16	#36	1435	#16	89	1524	7620	28	#36	1305	#16	89
III	864	14-63.5	1524	1676	1981	16	#36	1435	#16	89	1524	7620	28	#36	1305	#16	89
IV	1016	16-63.5	1524	1676	1981	16	#36	1581	#16	89	1524	10058	28	#36	1305	#16	89
V	1016	16-63.5	1524	1676	1981	16	#36	1581	#16	89	1524	10058	28	#36	1305	#16	89
VI	1016	16-63.5	1524	1676	1981	16	#36	1581	#16	89	1524	10058	28	#36	1305	#16	89

** Use Foundation Depth shown in table unless otherwise shown on the Project Plans.

NOTES

1. For anchor bolt layout see post sheet.
2. For "Base ℄ elevation", see Project Plans.
3. Prior to erection of the post, backfill which is equivalent to the surrounding material, shall be in place.
4. Pedestal shall be formed 150 mm minimum below ground surface Remainder to be placed against undisturbed material.
5. Slope protection required when indicated on the Project Plans.
6. Foundation design is based on 2001 ASSHTO article 13.6 Broms' approximate procedure assuming a cohesionless material. The angle of internal friction Dig used 30 degree and unit weight of soil used is 1922 kg/m³.

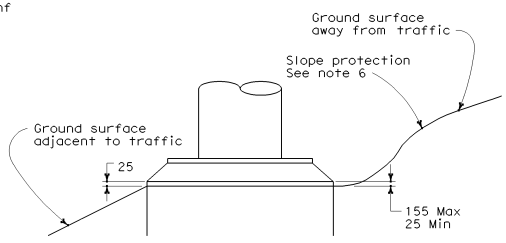

DETAIL C

Caltrans Metric

DIST	COUNTY	ROUTE	KILOMETER POST TOTAL PROJECT	SHEET NO.	TOTAL SHEETS

REGISTERED ~~CIVIL~~ ENGINEER

July 1, 2004
PLANS APPROVAL DATE

REGISTERED PROFESSIONAL ENGINEER Tillat Sattar No. C42892 Exp. 03-31-2006 CIVIL STATE OF CALIFORNIA

The State of California or its officers or agents shall not be responsible for the accuracy or completeness of electronic copies of this plan sheet.

To get to the Caltrans web site, go to: http://www.dot.ca.gov

STATE OF CALIFORNIA
DEPARTMENT OF TRANSPORTATION

OVERHEAD SIGNS-TUBULAR SINGLE POST AND TWO POST TYPE ROUND PEDESTAL PILE FOUNDATION

NO SCALE

ALL DIMENSIONS ARE IN MILLIMETERS UNLESS OTHERWISE SHOWN

S37

08-05-04

Back to Table of Contents

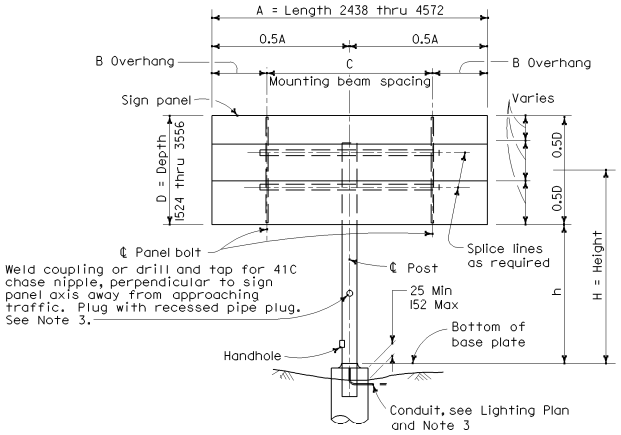

ELEVATION A

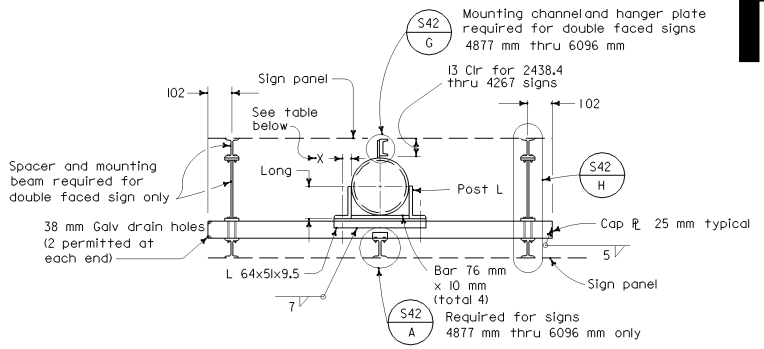

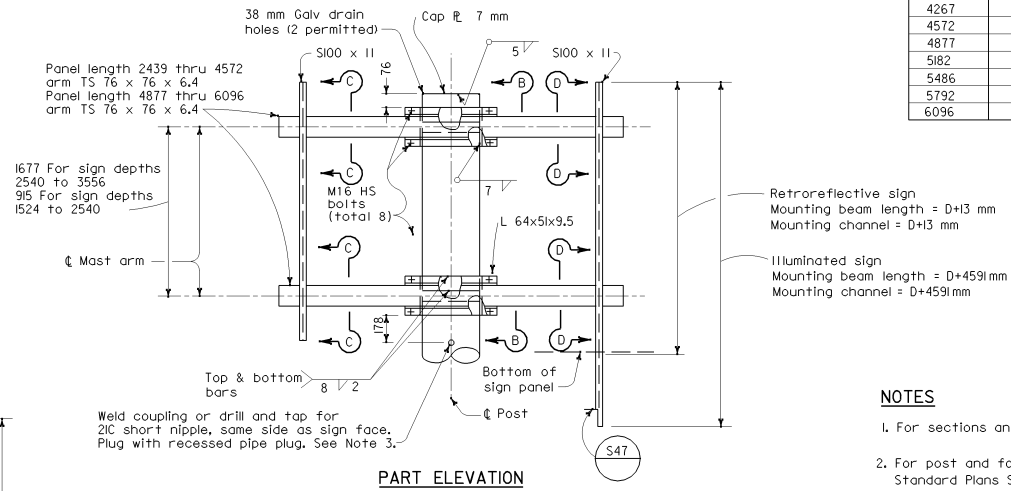

PART ELEVATION

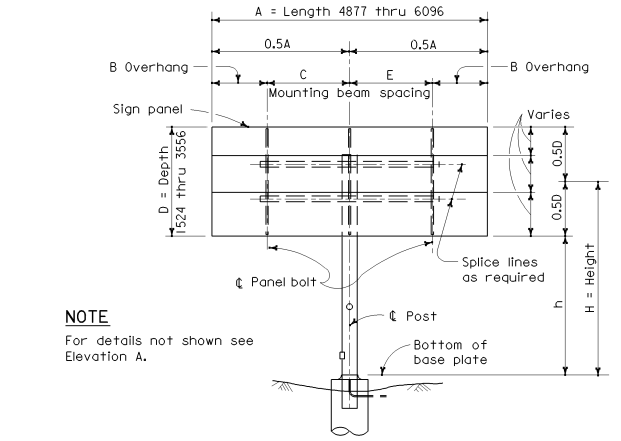

ELEVATION B

NOTE

For details not shown see Elevation A.

MOUNTING BEAM SPACING

Sign Panel Length	Number Mounting Beams	Sign Panel Overhang	Mounting Beam Spacing	
A		B	C	E
1524	2	229	1066	
1829	2	305	1219	
2134	2	381	1372	
2438	2	457	1524	
2743	2	559	1625	
3048	2	610	1829	
3353	2	610	2134	
3657	2	762	2134	
3962	2	762	2438	
4267	2	762	2743	
4572	2	914.5	2743	
4877	3	152.5	2286	2286
5182	3	305	2286	2286
5486	3	305	2438	2438
5792	3	305	2591	2591
6096	3	457	2591	2591

Post Size (Pipe)		Post Angles		
NPS	Min "t"	Angle	X (mm)	Weld (mm)
6	7.11	∠ 89x76x12.7	45	7
6	10.97	∠ 89x76x12.7	45	7
8	8.18	∠ 127x76x12.7	45	7
8	1.27	∠ 127x76x12.7	45	7
10	12.7	∠ 152x102x15.9	64	7
12	12.7	∠ 178x102x15.9	64	8
14	12.7	∠ 203x102x19.0	64	8
14	15.88	∠ 203x102x19.0	64	8

NOTES

1. For sections and detail not shown see S42
2. For post and foundation details see Standard Plans S48 and S49.
3. Drilled holes, plugs, conduit and handhole required on illuminated signs only.

Caltrans Metric

DIST	COUNTY	ROUTE	KILOMETER POST TOTAL PROJECT	SHEET NO.	TOTAL SHEETS

REGISTERED CIVIL ENGINEER

July 1, 2004
PLANS APPROVAL DATE

REGISTERED PROFESSIONAL ENGINEER Iliat Sattar NO. C42892 Exp. 03-31-2006 CIVIL STATE OF CALIFORNIA

The State of California or its officers or agents shall not be responsible for the accuracy or completeness of electronic copies of this plan sheet.

To get to the Caltrans web site, go to: http://www.dot.ca.gov

STATE OF CALIFORNIA
DEPARTMENT OF TRANSPORTATION

OVERHEAD SIGNS-LIGHTWEIGHT BALANCED-SINGLE STEEL POST CONNECTION AND MOUNTING DETAILS

NO SCALE

ALL DIMENSIONS ARE IN MILLIMETERS UNLESS OTHERWISE SHOWN

S41

08-05-04

Back to Table of Contents

DIST	COUNTY	ROUTE	KILOMETER POST TOTAL PROJECT	SHEET NO.	TOTAL SHEETS

Caltrans Metric

REGISTERED CIVIL ENGINEER

July 1, 2004
PLANS APPROVAL DATE

REGISTERED PROFESSIONAL ENGINEER Tillat Sattar No. C42892 Exp. 03-31-2006 CIVIL STATE OF CALIFORNIA

The State of California or its officers or agents shall not be responsible for the accuracy or completeness of electronic copies of this plan sheet.

To get to the Caltrans web site, go to: http://www.dot.ca.gov

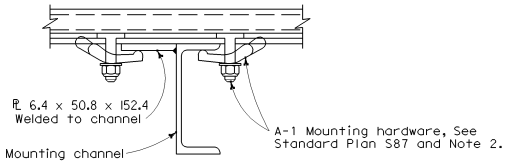

DETAIL K

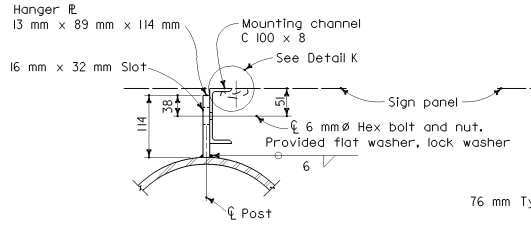

DETAIL G

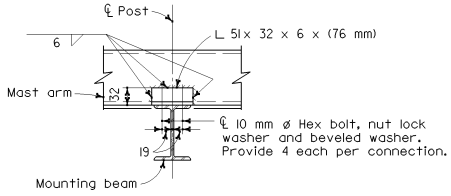

DETAIL A

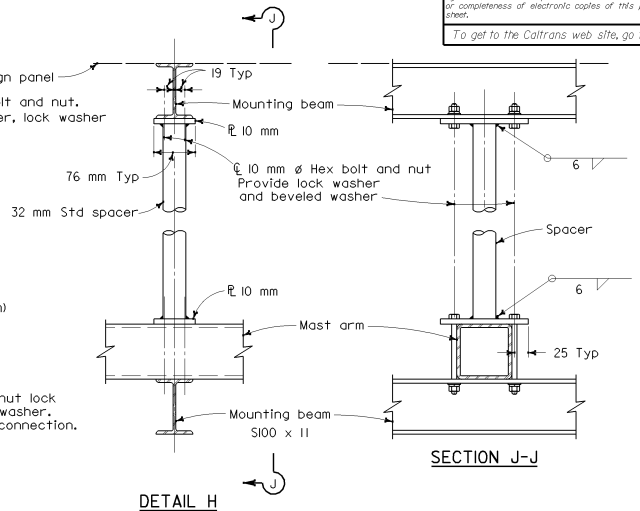

DETAIL H

SECTION J-J

NOTE

Spacer required for double faced sign only.

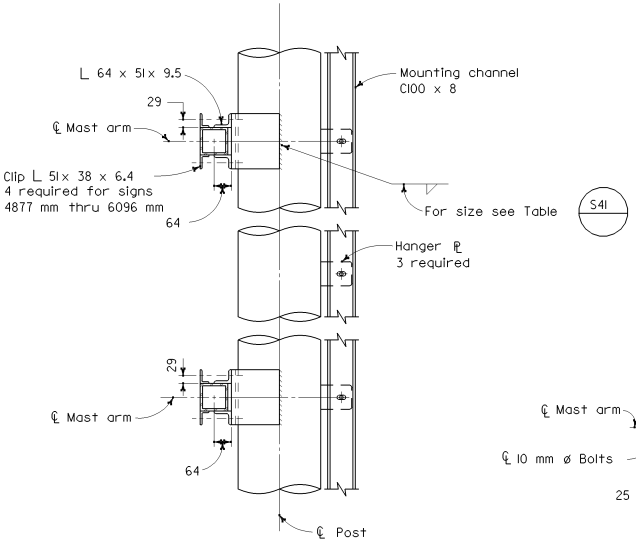

SECTION B-B

NOTE

Mounting channel and hanger ℞ required for double faced signs 4877 mm thru 6096 mm only.

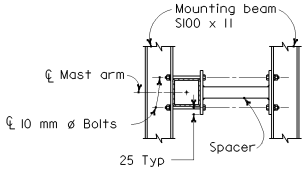

SECTION C-C

NOTE

Typical end mount for double faced signs.

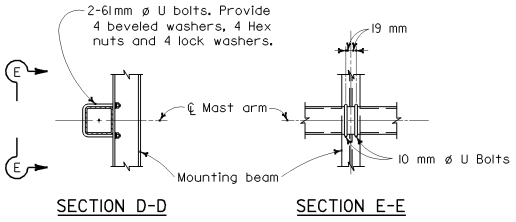

SECTION D-D

SECTION E-E

NOTE

Typical connection to single faced signs.

NOTES

1. For sections and details not shown, see S41.
2. Torque stainless steel sign panel mounting bolts to 12 Nm.

STATE OF CALIFORNIA
DEPARTMENT OF TRANSPORTATION

OVERHEAD SIGNS-LIGHTWEIGHT BALANCED-SINGLE STEEL POST DETAILS

NO SCALE

ALL DIMENSIONS ARE IN MILLIMETERS UNLESS OTHERWISE SHOWN

S42

07-30-04

Back to Table of Contents

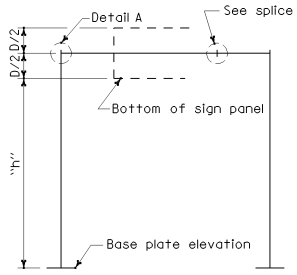

SINGLE CROSS BEAM SERIES
TYPE A-1

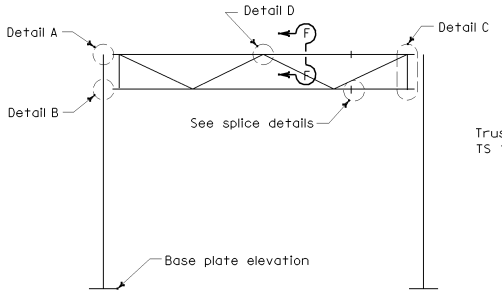

TRUSS CROSS BEAM SERIES
TYPE A-2

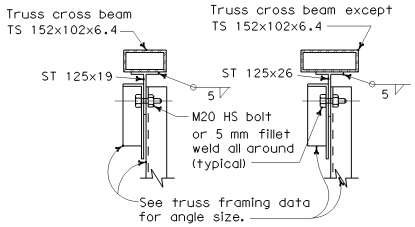

SECTION F-F

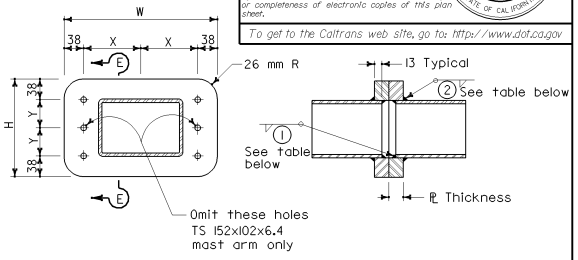

END VIEW SECTION E-E

SPLICE DETAILS

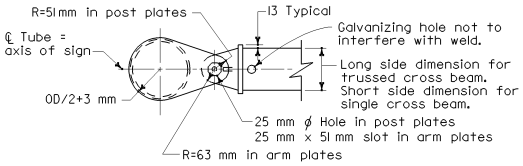

PLAN

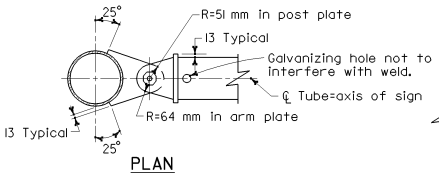

PLAN

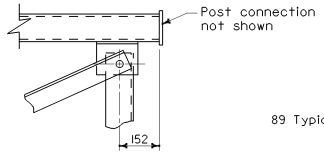

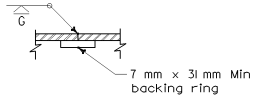

OPTIONAL
WELDED SPLICE

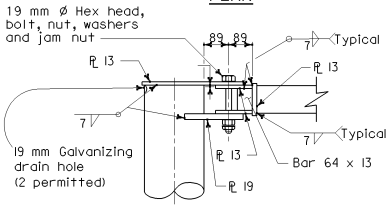

DETAIL A

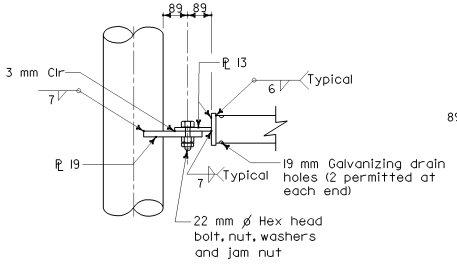

DETAIL B

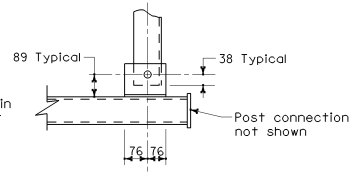

DETAIL C

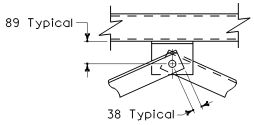

DETAIL D

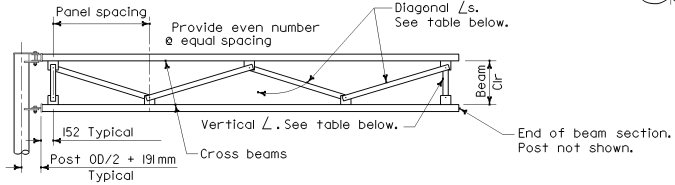

Camber for fabrication at ℄ span
Span < 9 m=0 mm
Span ≥ 9 m=13 mm

TRUSS FRAMING DATA

SIGN DEPTH (mm)	BEAM CLEARANCE (mm)	MAXIMUM PANEL SPACING (mm)	VERTICAL ANGLE (mm)	DIAGONAL ANGLE (mm)
1016-1778	610	1676	∠89x64x6.4 *	∠89x64x6.4 *
2032-2540	1372	1981	∠89x64x6.4 *	∠89x64x6.4 *

* Short leg outstanding.

SPLICE DATA

TUBULAR CROSS BEAM SIZE (mm)	HIGH STRENGTH BOLTS				A-36 PLATES (mm)			WELDING	
	No.	SIZE	X (mm)	Y (mm)	W (mm)	H (mm)	THICK-NESS	1	2
TS 152x102x6.4	4	M20	108	51	292	178	25.4	5	8
TS 203x102x6.4	6	M20	133	51	343	178	25.4	5	8
TS 203x152x6.4	6	M20	133	64	343	203	29	5	10
TS 203x152x9.5	6	M20	108	89	292	254	29	7	8
TS 254x152x6.4	6	M20	165	64	406	203	35	5	10
TS 254x152x9.5	6	M20	165	76	406	229	41	8	13

NOTE

For post connection to base ℄ see S48/A

For cross beam to sign panel connections see S46

See Format sheet for:

1. Sign type and location.
2. Panel type and location on structure.
3. Post size and dimension "h".
4. Cross beam size.
5. Foundation type.
6. Illumination if required.

STATE OF CALIFORNIA
DEPARTMENT OF TRANSPORTATION

OVERHEAD SIGNS-LIGHTWEIGHT TYPE A CONNECTION DETAILS

NO SCALE

ALL DIMENSIONS ARE IN
MILLIMETERS UNLESS OTHERWISE SHOWN

S43

Caltrans Metric

DIST	COUNTY	ROUTE	KILOMETER POST TOTAL PROJECT	SHEET NO.	TOTAL SHEETS

REGISTERED CIVIL ENGINEER

July 1, 2004
PLANS APPROVAL DATE

REGISTERED PROFESSIONAL ENGINEER
Tiliat Sattar
No. C42892
Exp. 03-31-2006
CIVIL
STATE OF CALIFORNIA

The State of California or its officers or agents shall not be responsible for the accuracy or completeness of electronic copies of this plan sheet.

To get to the Caltrans web site, go to: http://www.dot.ca.gov

08-05-04

Back to Table of Contents

DIST	COUNTY	ROUTE	KILOMETER POST TOTAL PROJECT	SHEET NO.	TOTAL SHEETS

REGISTERED CIVIL ENGINEER

July 1, 2004
PLANS APPROVAL DATE

REGISTERED PROFESSIONAL ENGINEER Tillat Sattar No. C42892 Exp. 03-31-2006 CIVIL STATE OF CALIFORNIA

The State of California or its officers or agents shall not be responsible for the accuracy or completeness of electronic copies of this plan sheet.

To get to the Caltrans web site, go to: http://www.dot.ca.gov

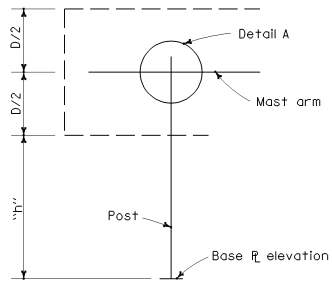

SINGLE ARM SERIES
TYPE B-1

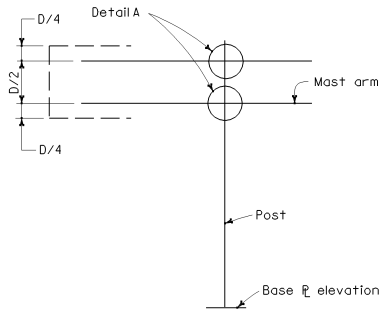

DOUBLE ARM SERIES
TYPE B-2

POST ANGLES			
POST SIZE	ANGLE	X (mm)	WELD (mm)
6	L102 x 76 x 12.7	45	7
8	L127 x 76 x 12.7	45	7
10	L152 x 1102 x 15.9	64	7
12	L178 x 102 x 15.9	64	8
14	L203 x 102 x 19.0	64	8

POST TO ARM FRAMING DATA

MAST ARM ANGLES				
ARM SIZE	ANGLE (mm)	HS BOLT	Y (mm)	WELD (mm)
TS 76 x 76 x 6.4	L51 x 51 x 9.5	M16	29	7
TS 102 x 102 x 6.4	L64 x 51 x 9.5	M16	29	7
TS 127 x 127 x 6.4	L76 x 64 x 9.5	M16	35	7
TS 152 x 152 x 6.4	L89 x 64 x 9.5	M16	35	7
TS 178 x 178 x 6.4	L102 x 76 x 1.27	M20	45	8
TS 203 x 203 x 6.4	L127 x 76 x 12.7	M22	45	8
TS 254 x 254 x 6.4	L152 x 102 x 15.9	M22	64	8

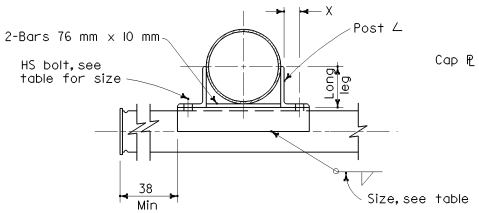

SECTION D-D

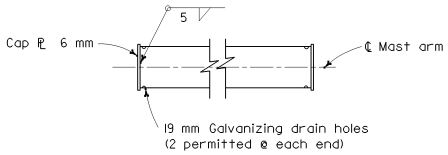

MAST ARM

END DETAIL

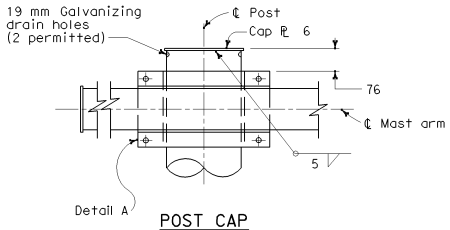

POST CAP

SEE OTHER PLAN SHEETS FOR

1. Sign type and location
2. Panel type and location on structure
3. Post size and dimension "h".
4. Mast arm size.
5. Foundation type.
6. Illumination if required.

NOTES

For post connection to base plate see S48

For mast arm length and mast arm-to-sign panel connections see S46

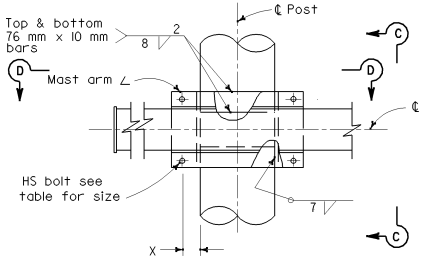

DETAIL A

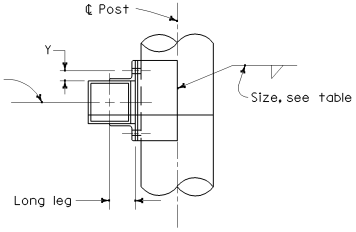

SECTION C-C

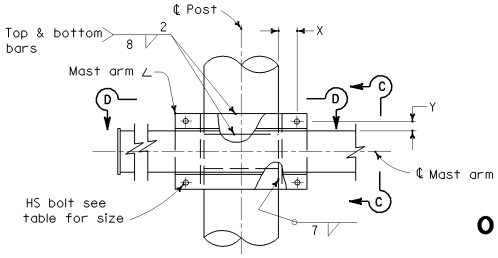

DETAIL B

STATE OF CALIFORNIA
DEPARTMENT OF TRANSPORTATION

OVERHEAD SIGNS-LIGHTWEIGHT TYPE B CONNECTION DETAILS

NO SCALE

ALL DIMENSIONS ARE IN MILLIMETERS UNLESS OTHERWISE SHOWN

S44

2004 Std PLAN S44

06-22-04

Back to Table of Contents

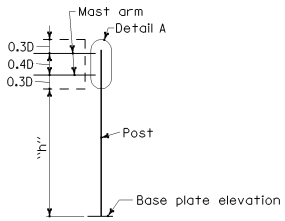

DOUBLE MASS ARM SERIES
TYPE C-1

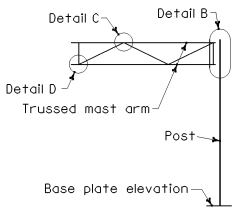

TRUSSED MASS ARM SERIES
TYPE C-2

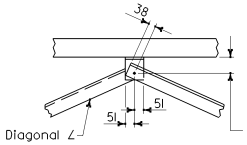

DETAIL C

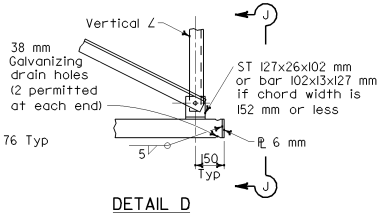

DETAIL D

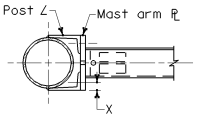

SECTION G-G

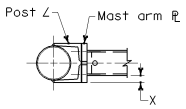

SECTION F-F

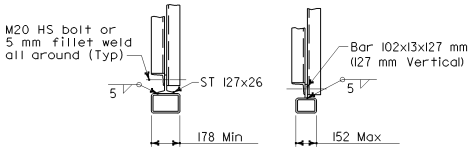

SECTION J-J

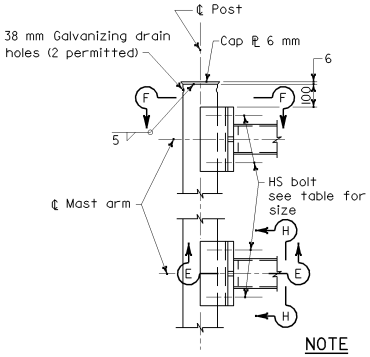

DETAIL A

NOTE

"T" equals vertical dimension of mast arm.

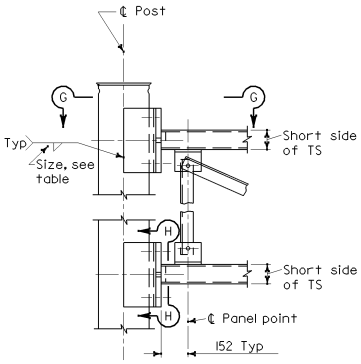

DETAIL B

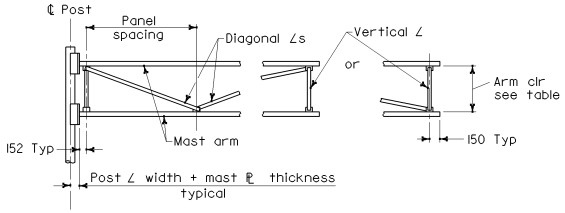

TRUSS FRAMING DATA

SIGN DEPTH (mm)	ARM CLEARANCE (mm)	MAX PANEL SPACING (mm)	VERTICAL ANGLE (mm)	DIAGONAL ANGLE (mm)
D=1016-1778	610	1321	51x51x6.4	51x51x6.4
D=2032-2540	914	1981	89x64x6.4*	89x64x6.4*

*Short leg outstanding

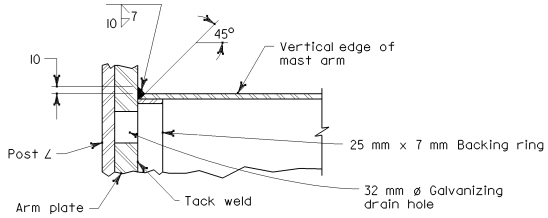

SECTION E-E

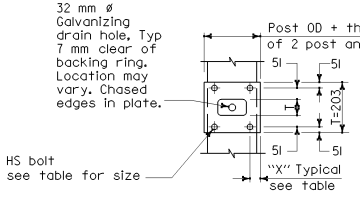

SECTION H-H

NOTE

"T" equals vertical dimension of mast arm.

Bottom connection shown.
Top similar.

For General Notes see S48

Caltrans Metric

DIST	COUNTY	ROUTE	KILOMETER POST TOTAL PROJECT	SHEET NO.	TOTAL SHEETS

REGISTERED CIVIL ENGINEER

July 1, 2004
PLANS APPROVAL DATE

REGISTERED PROFESSIONAL ENGINEER
Tiliat Sattar
NO. C42892
Exp. 03-31-2006
CIVIL
STATE OF CALIFORNIA

The State of California or its officers or agents shall not be responsible for the accuracy or completeness of electronic copies of this plan sheet.

To get to the Caltrans web site, go to: http://www.dot.ca.gov

POST ANGLES			
POST SIZE	ANGLE (mm)	X (mm)	WELD (mm)
6	∠127x76x12.7	44	7
8	∠152x102x15.9	57	7
10	∠178x102x15.9	57	7
12	∠203x102x19.0	57	8
14	∠203x102x19.0	57	8

POST TO ARM FRAMING DATA

MAST ARM PLATE			
TWO ARMS	TRUSSED ARMS	PLATE (mm)	HS BOLT
TS 76x76x6.4		19	M16
TS 102x102x6.4		25.4	M16
TS 127x127x6.4		25.4	M20
TS 152x152x6.4		25.4	M20
TS 178x178x6.4	TS 127x76x9.5	32	M20
	TS 152x102x9.5	32	M22
	TS 178x127x9.5	32	M22
	TS 203x152x9.5	32	M22
	TS 254x152x9.5	32	M24

NOTES

For post connection to base PL see S48

For mast arm length and mast-arm-to sign panel connections see S46

See other plan sheets for:
1. Sign type and location.
2. Panel type and location on structure.
3. Post size and dimension "h".
4. Mast arm size.
5. Foundation type.
6. Illumination if required.

STATE OF CALIFORNIA
DEPARTMENT OF TRANSPORTATION

OVERHEAD SIGNS-LIGHTWEIGHT TYPE C CONNECTIONS DETAILS

NO SCALE

ALL DIMENSIONS ARE IN MILLIMETERS UNLESS OTHERWISE SHOWN

S45

08-02-04

Back to Table of Contents

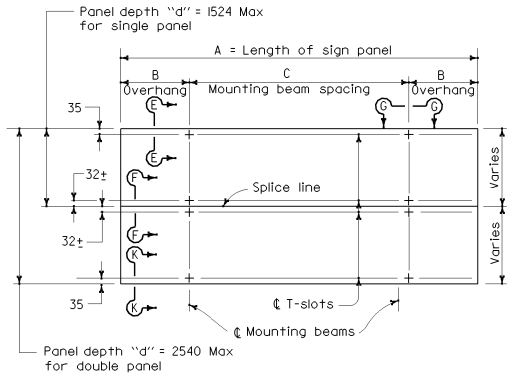

SIGN PANEL LENGTH 1524 TO 4572

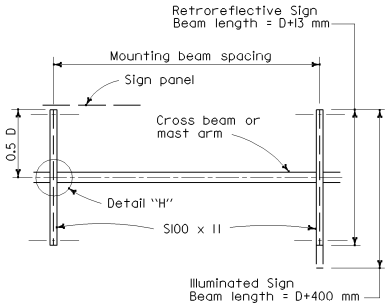

SINGLE BEAM OR ARM SERIES

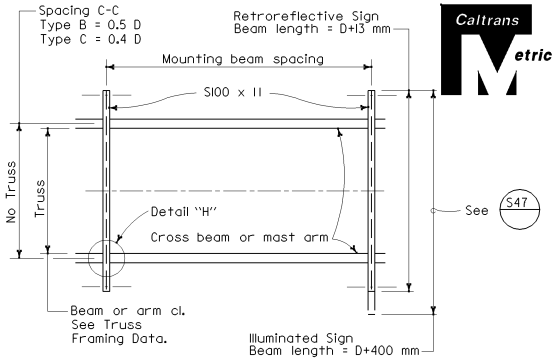

DOUBLE BEAM OR ARM SERIES

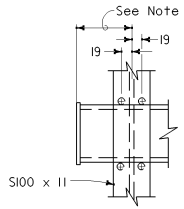

END ARM DETAIL
SINGLE POST SIGNS

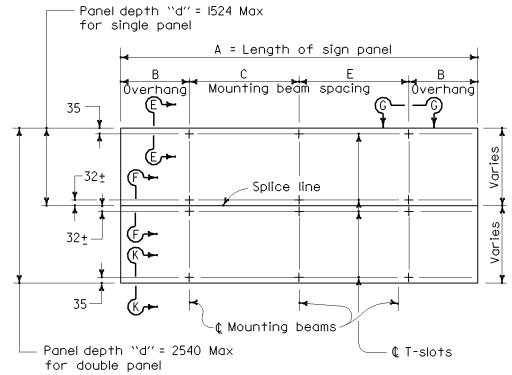

ELEVATION
SIGN PANEL LENGTH 4877 TO 7315*

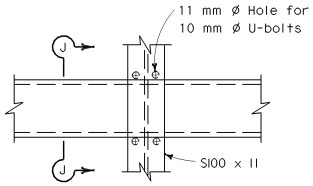

DETAIL H

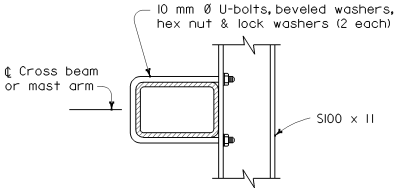

SECTION J-J

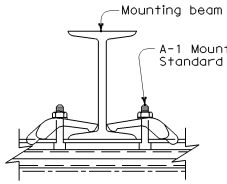

SECTION G-G

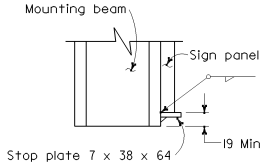

SECTION K-K

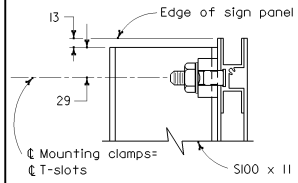

SECTION E-E

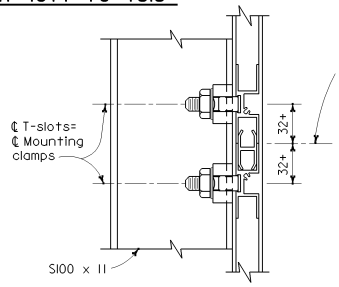

SECTION F-F

MOUNTING BEAM SPACING

Sign Panel Length *	Number Mounting Beams	Sign Panel Overhang	Mounting Beam Spacing	
A (mm)		B (mm)	C (mm)	E (mm)
1524	2	229	1066	
1829	2	305	1219	
2134	2	381	1372	
2438	2	457	1524	
2743	2	559	1625	
3048	2	610	1829	
3353	2	610	2134	
3657	2	762	2134	
3962	2	762	2438	
4267	2	762	2743	
4572	2	915	2743	
4877	3	152	2286	2286
5182	3	305	2286	2286
5486	3	305	2438	2438
5792	3	305	2591	2591
6096	3	457	2591	2591
6400	3	457	2743	2743
6706	3	610	2743	2743
7010	3	762	2743	2743
7315	3	914.5	2743	2743

* Signs longer than 7315 mm are fabricated and mounted as adjoining single panels. The location of the vertical splice line will be determined by the Engineer.

NOTES

1. The location of the horizontal splice line is dependent on the sign panel manufacturer for signs greater than 1524 mm in depth. Mounting bolts and clamps are required on each of the horizontal splice line at each support beam.
2. Position sign panel so that mounting beams will clear truss connections and arm to post joints. Where interference cannot be avoided, 13 mm Ø holes to pass the 10 mm Ø U-bolts may be drilled through mast arm angles or truss connection members as necessary.
3. Torque stainless steel sign panel mounting bolts to 12 Nm.
4. 300 mm for Type C-1 and C-2. Others, 102 mm.
5. A stop plate is required at each mounting beam under sign panel.

DIST	COUNTY	ROUTE	KILOMETER POST TOTAL PROJECT	SHEET NO.	TOTAL SHEETS

REGISTERED CIVIL ENGINEER
July 1, 2004
PLANS APPROVAL DATE

REGISTERED PROFESSIONAL ENGINEER Tillat Sattar No. C42892 Exp. 03-31-2006 CIVIL STATE OF CALIFORNIA

The State of California or its officers or agents shall not be responsible for the accuracy or completeness of electronic copies of this plan sheet.

To get to the Caltrans web site, go to: http://www.dot.ca.gov

STATE OF CALIFORNIA
DEPARTMENT OF TRANSPORTATION

OVERHEAD SIGNS-LIGHTWEIGHT SIGN PANEL MOUNTING DETAILS LAMINATED PANEL-TYPE A

NO SCALE

ALL DIMENSIONS ARE IN MILLIMETERS UNLESS OTHERWISE SHOWN

S46

08-02-04

Back to Table of Contents

DIST	COUNTY	ROUTE	KILOMETER POST TOTAL PROJECT	SHEET NO.	TOTAL SHEETS

REGISTERED ~~CIVIL~~ ENGINEER

July 1, 2004
PLANS APPROVAL DATE

REGISTERED PROFESSIONAL ENGINEER Tiliat Sattar No. C42892 Exp. 03-31-2006 CIVIL STATE OF CALIFORNIA

The State of California or its officers or agents shall not be responsible for the accuracy or completeness of electronic copies of this plan sheet.

To get to the Caltrans web site, go to: http://www.dot.ca.gov

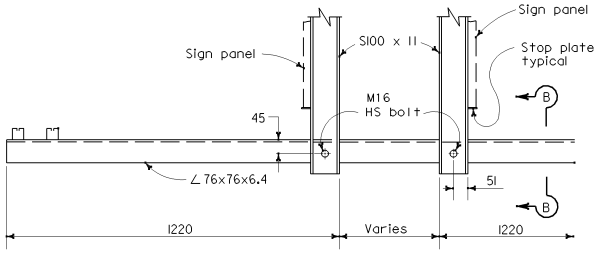

SIDE VIEW - DOUBLE FACED SIGN - END MOUNT

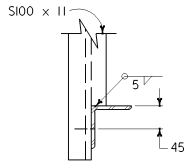

PART SECTION B-B

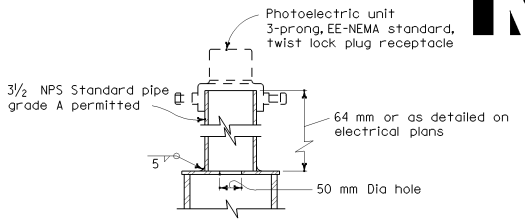

PHOTOELECTRIC UNIT

NOTE

For details not shown see "Side View - Single Faced Sign Type A, B & C" details.

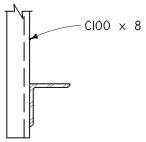

PART SECTION A-A

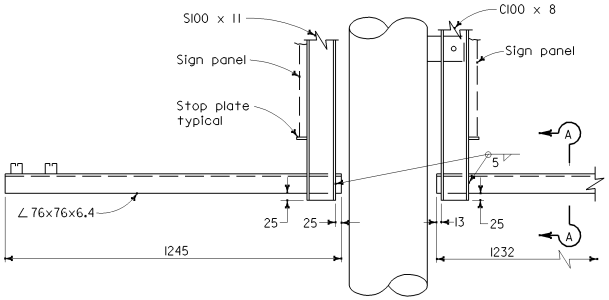

SIDE VIEW - DOUBLE FACED SIGN - CENTER MOUNT
(Required only on balanced single post sign panel length 4877 thru 7315)

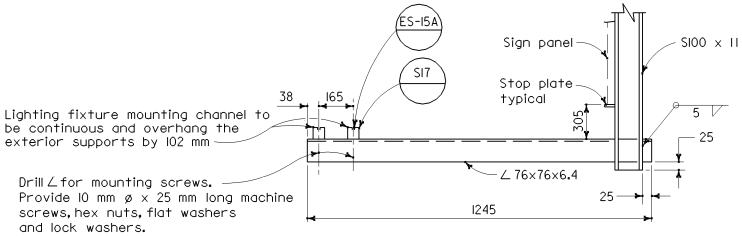

SIDE VIEW - SINGLE FACED SIGN TYPES A, B & C
LIGHTING FIXTURE MOUNTING DETAIL
SIGNS GREATER THAN 1676 mm IN LENGTH

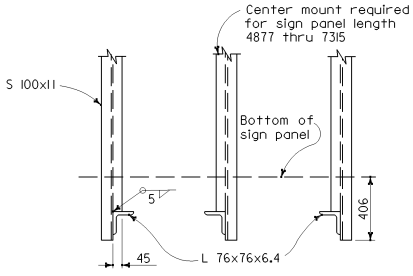

FRONT VIEW

STATE OF CALIFORNIA
DEPARTMENT OF TRANSPORTATION

OVERHEAD SIGNS-LIGHTWEIGHT LIGHT FIXTURE MOUNTING DETAILS

NO SCALE

ALL DIMENSIONS ARE IN MILLIMETERS UNLESS OTHERWISE SHOWN

S47

08-02-04

2004 Std PLAN S47

Back to Table of Contents

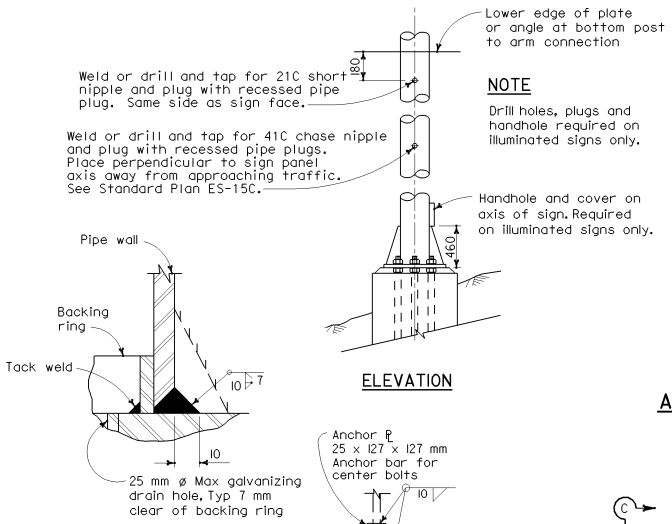

NOTE

Drill holes, plugs and handhole required on illuminated signs only.

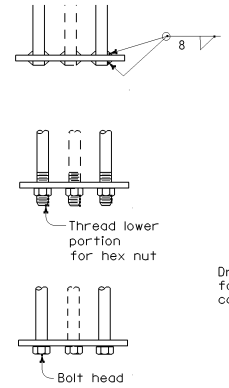

ALTERNATIVE BAR CONNECTIONS

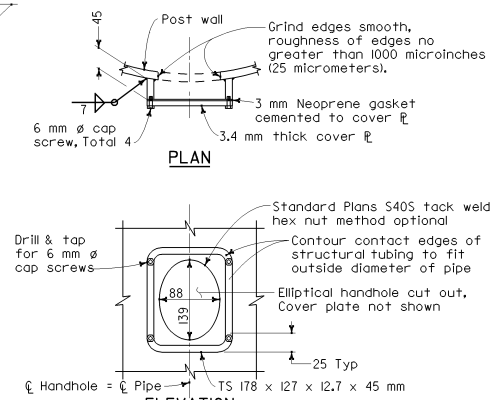

TYPICAL DETAILS OF HANDHOLE AND COVER

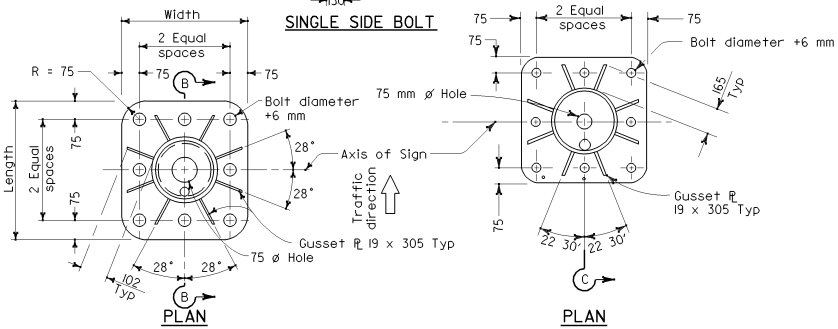

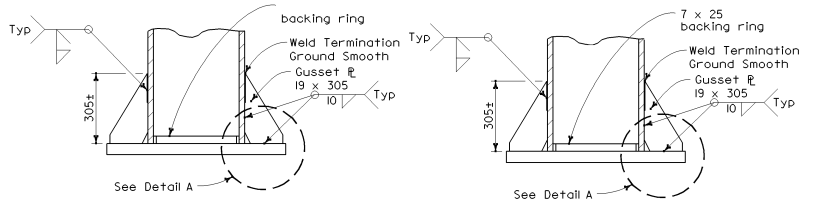

BASE PLATE DETAILS

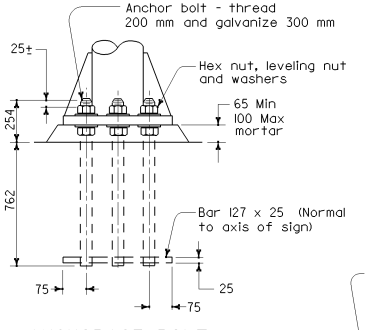

ANCHORAGE BOLT

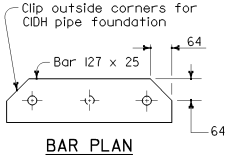

BAR PLAN

ANCHORAGE DETAILS

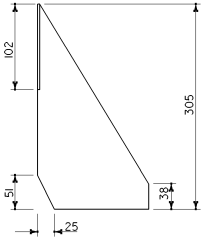

GUSSET DETAIL

Caltrans Metric

DIST	COUNTY	ROUTE	KILOMETER POST TOTAL PROJECT	SHEET NO.	TOTAL SHEETS

REGISTERED CIVIL ENGINEER

July 1, 2004
PLANS APPROVAL DATE

REGISTERED PROFESSIONAL ENGINEER Tillat Sattar No. C42892 Exp. 03-31-2006 CIVIL STATE OF CALIFORNIA

The State of California or its officers or agents shall not be responsible for the accuracy or completeness of electronic copies of this plan sheet.

To get to the Caltrans web site, go to: http://www.dot.ca.gov

GENERAL NOTES

DESIGN: AASHTO Standard Specifications for Structural Supports for Highway Signs, Luminaires and Traffic Signals, dated 1994.

CONSTRUCTION: Standard Specifications and the Special Provision.

WELDING: All welding continuous unless otherwise noted on the plans. All welding to be done in accordance with the Standard Specifications.

NOTES

1. Footing shall be placed with long dimensions normal to axis of sign.
2. On single post signs the post shall be raked out of the sign frame level.
3. 51mm ø anchor bolts may be substituted for 45 mm ø bolts. 64 mm ø anchor bolts may be substituted for 57 mm ø bolts.

Post Size		Base Plate (mm)	Anchor Bolts	
NPS	"t" (mm)		#	Bolt ø
6	7.11	51 x 534 x 534	8	51 mm
6	10.97	51 x 534 x 534	8	51 mm
8	8.18	51 x 534 x 534	8	51 mm
8	12.7	51 x 534 x 534	8	51 mm
10	12.7	51 x 715 x 715	8	57 mm
12	12.7	51 x 715 x 715	8	57 mm
14	12.7	51 x 715 x 715	8	57 mm
14	19.0	51 x 715 x 715	8	57 mm

"t" = Wall Thickness

STATE OF CALIFORNIA
DEPARTMENT OF TRANSPORTATION

OVERHEAD SIGNS-LIGHTWEIGHT POST DETAILS

NO SCALE

ALL DIMENSIONS ARE IN MILLIMETERS UNLESS OTHERWISE SHOWN

S48

08-05-04

Back to Table of Contents

POST SIZE		PILE FOUNDATION				SPREAD FOOTING				
NPS	"t" (mm)	Pedestal (mm)	Pile Dia (mm)	Pile Depth (m)	Vertical Reinf	Pedestal (mm)	Footing (m)	Reinforcement Top	Bottom	L Bar
6	7.11	864 x 864	762	3.0	#19	762 x 762	1.3 x 1.9	#16	#16	#16
6	10.97	864 x 864	762	3.0	#19	762 x 762	1.3 x 2.2	#16	#16	#16
8	8.18	864 x 864	762	3.0	#19	762 x 762	1.6 x 2.5	#16	#16	#16
8	12.7	864 x 864	762	3.4	#22	762 x 762	1.9 x 2.8	#16	#16	#16
10	12.7	1016 x 1016	914	4.0	#25	914 x 914	2.2 x 3.1	#16	#25	#25
12	12.7	1016 x 1016	914	4.6	#32	914 x 914	2.2 x 3.7	#19	#25	#25
14	12.7	1016 x 1016	914	4.6	#32	914 x 914	2.2 x 4.0	#25	#29	#25
14	15.88	1016 x 1016	914	4.9	#32	914 x 914	2.5 x 4.3	#25	#29	#25

NOTES

1. Backfill shall be in place prior to erection of post.
2. Slope protection required when indicated on the plans.
3. Pile pedestal shall be formed 155 mm minimum below ground surface. Remainder to be placed against undisturbed material.

Caltrans Metric

DIST	COUNTY	ROUTE	KILOMETER POST TOTAL PROJECT	SHEET NO.	TOTAL SHEETS

REGISTERED CIVIL ENGINEER

July 1, 2004
PLANS APPROVAL DATE

REGISTERED PROFESSIONAL ENGINEER Tiliat Sattar NO. C42892 Exp. 03-31-2006 CIVIL STATE OF CALIFORNIA

The State of California or its officers or agents shall not be responsible for the accuracy or completeness of electronic copies of this plan sheet.

To get to the Caltrans web site, go to: http://www.dot.ca.gov

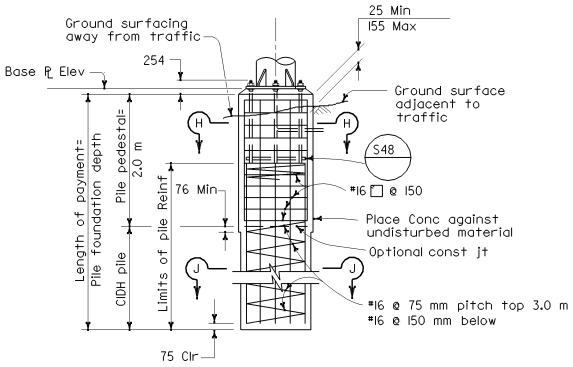

ELEVATION

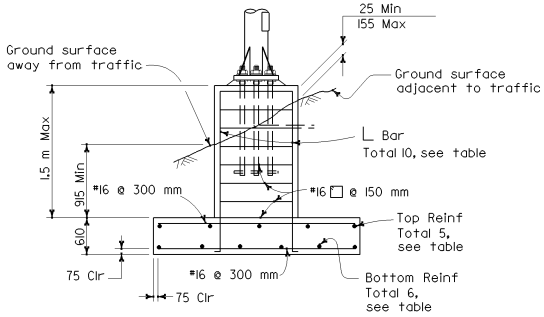

ELEVATION

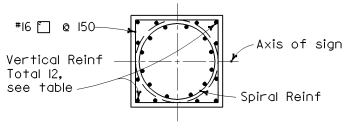

SECTION H-H

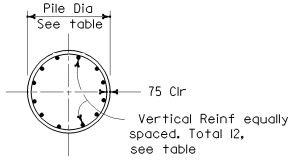

SECTION J-J
6 NPS THRU 14 NPS POSTS
PILE FOUNDATION

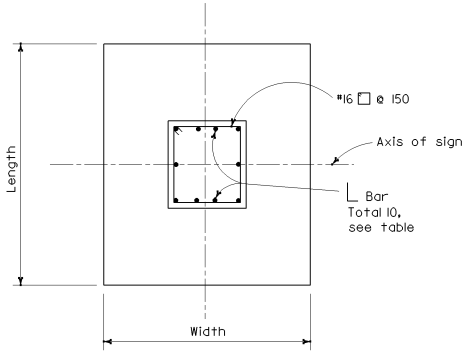

PLAN
SPREAD FOOTING

STATE OF CALIFORNIA
DEPARTMENT OF TRANSPORTATION

OVERHEAD SIGNS-LIGHTWEIGHT FOUNDATION DETAILS

NO SCALE

ALL DIMENSIONS ARE IN MILLIMETERS UNLESS OTHERWISE SHOWN

S49

2004 Std PLAN S49

08-02-04

Back to Table of Contents

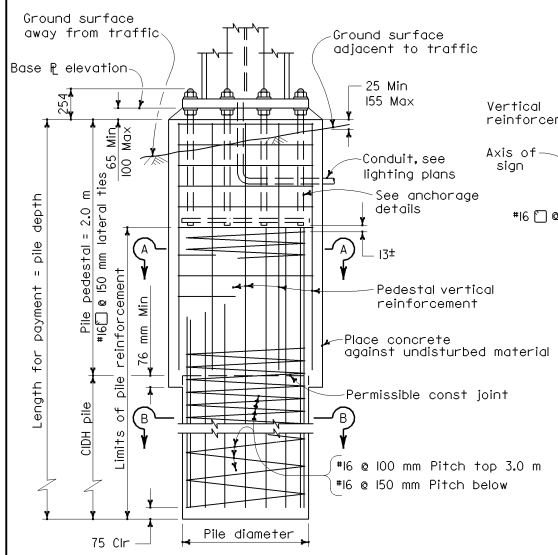

ELEVATION

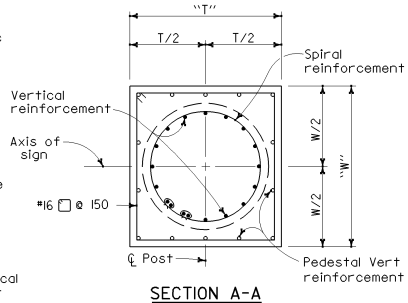

SECTION A-A

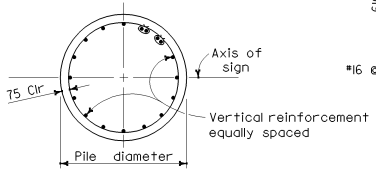

SECTION B-B

PILE FOUNDATION

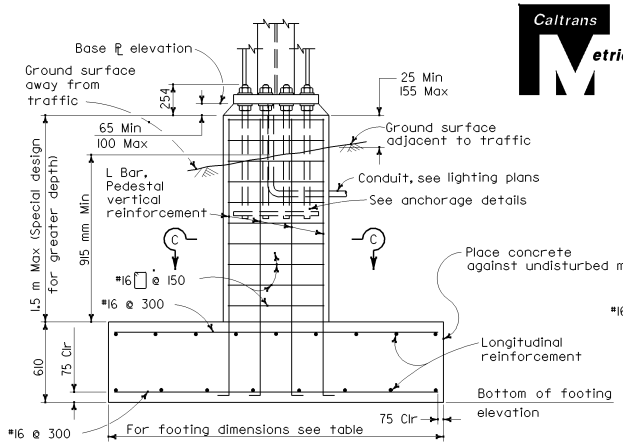

ELEVATION

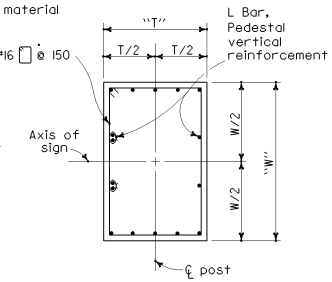

SECTION C-C

SPREAD FOOTING

TWO POST TYPE											
Post Type	Pedestal Size "T" x "W" (m) x (m)	Pile Foundation				Spread Footing					
		Vertical Reinf	Pile Dia (mm)	Pile Depth (m)	Pedestal Vert Reinf	Footing Dimension (m)	Top Reinf		Bottom Reinf		
							Longitudinal	Transverse	Longitudinal	Transverse	
A-1	1050 x 1250	16-#25	920	4.3	14-#22	2.2 x 4.9	7-#16	#16 @ 300	6-#29	#16 @ 300	
A-2		16-#29		4.9	14-#25	2.5 x 5.2	10-#16		10-#29		
A-3		16-#36		6.1	14-#29	2.5 x 5.5	8-#19		9-#36		
A-4		*24-#36		6.4	14-#29	2.5 x 6.1	8-#25		11-#36		
A-5		*24-#36		6.4	14-#32	2.5 x 6.1	8-#25		11-#36		
B-1	1.05 x 1.35	*16-#36		6.1	14-#25	2.5 x 5.5	8-#19		9-#36		
B-2	1.05 x 1.35	*24-#36		6.7	14-#29	2.5 x 6.1	10-#19		11-#36		
B-3	1.05 x 1.40	*28-#36		7.4	14-#32	2.5 x 6.4	7-#25		13-#36		
B-4	1.20 x 1.40	*24-#36	1070	6.7	14-#32	2.5 x 6.7	7-#25		14-#36		
B-5	1.20 x 1.40	*24-#36	1070	7.0	14-#32	2.5 x 7.1	8-#25		15-#36		
C-1	1.05 x 1.05	16-#29	920	4.9	14-#22	2.2 x 4.9	6-#19		7-#36		
C-2	1.05 x 1.15	16-#36		5.8	14-#29	2.5 x 5.2	8-#19		9-#36		
C-3	1.05 x 1.15	*24-#36		6.4	14-#32	2.5 x 5.8	9-#19		11-#36		
C-4	1.05 x 1.15	*28-#36		7.4	14-#32	2.5 x 6.4	7-#25		13-#36		
C-5	1.20 x 1.20	*24-#36	1070	6.7	14-#36	2.5 x 6.7	8-#25		15-#36		
C-6		*24-#36		7.1	14-#36	2.5 x 7.1	8-#25		16-#36		
C-7		*28-#36		7.4	14-#36	2.5 x 7.1	8-#25		12-#43		
C-8		*34-#36		7.7	*28-#32	2.5 x 7.4	9-#25		13-#43		
D-1	1.05 x 1.25	*24-#36	920	6.4	14-#29	2.5 x 5.8	9-#19		10-#36		
D-2	1.05 x 1.30	*28-#36	920	7.4	14-#32	2.5 x 6.4	7-#25		13-#36		
D-3	1.20 x 1.30	*24-#36	1070	7.4	14-#36	2.5 x 7.1	8-#25		16-#36		
D-4		*34-#36		8.3	14-#36	2.5 x 7.1	8-#25		18-#36		
D-5		*34-#36		9.2	*28-#32	2.5 x 7.7	9-#25		14-#43		
D-6	1.30 x 1.40	*34-#36		9.2	14-#36	2.5 x 8.0	10-#25		14-#43		
D-7		*34-#36		9.2	14-#36	2.5 x 8.0	10-#25	#16 @ 300	15-#43	#16 @ 300	

* Bundled bars

SINGLE POST TYPE										
Post Type	Pedestal Size "T" x "W" (m) x (m)	Pile Foundation				Spread Footing				
		Vertical Reinf	Pile Dia (mm)	Foundation Depth (m)	Pedestal Vert Reinf	Footing Dimension (m)	Top Reinf		Bottom Reinf	
							Longitudinal	Transverse	Longitudinal	Transverse
E-1	1.02 x 1.12	16-#25	920	4.0	14-#25	2.5x 4.3	6-#16	#16 @ 300	9-#22	#16 @ 300
E-2	1.02 x 1.12	16-#29		4.6	14-#29	2.8 x 4.6	6-#19		9-#29	
E-3	1.12 x 1.12	16-#32		5.5	14-#32					
E-4	1.12 x 1.12	16-#36		6.1	14-#36					
F-1	1.02 x 1.12	16-#25		4.0	14-#22	2.5 x 4.0	8-#16	#16 @ 300	10-#22	#16 @ 300
F-2		16-#29		4.6	14-#22	2.5 x 4.6	8-#16		11-#25	
F-3		16-#29		4.9	14-#25	2.5 x 4.9	9-#16		10-#29	
F-4		16-#36		5.8	14-#29	2.5 x 5.8	6-#19		10-#36	
F-5		16-#36		6.7	14-#32	2.5 x 6.1	10-#19	#16 @ 300	12-#36	#16 @ 300

NOTES

1. Base plates, pedestals and footings; longer sides shall be normal to axis of sign.
2. For anchor bolt layout see Standard Plans S66 and S70.
3. For base plate elevation see Format sheet.
4. Prior to erection of the post, backfill which is equivalent to the surrounding material shall be in place.
5. Pile pedestal shall be formed 155 mm minimum below ground surface. Remainder to be placed against undisturbed material.
6. Pile footing - use foundation depth shown in table unless otherwise shown on Format sheet.
7. On single post sign structures the post shall be raked out of plumb with the use of the levelling nuts to make the bottom of the sign frame level.

Caltrans Metric

DIST	COUNTY	ROUTE	KILOMETER POST TOTAL PROJECT	SHEET NO.	TOTAL SHEETS

REGISTERED CIVIL ENGINEER

July 1, 2004
PLANS APPROVAL DATE

REGISTERED PROFESSIONAL ENGINEER Tillat Sattar No. C42892 Exp. 03-31-2006 CIVIL STATE OF CALIFORNIA

The State of California or its officers or agents shall not be responsible for the accuracy or completeness of electronic copies of this plan sheet.

To get to the Caltrans web site, go to: http://www.dot.ca.gov

STATE OF CALIFORNIA
DEPARTMENT OF TRANSPORTATION

OVERHEAD SIGNS-BOX BEAM CLOSED TRUSS FOUNDATION DETAILS

NO SCALE

ALL DIMENSIONS ARE IN MILLIMETERS UNLESS OTHERWISE SHOWN

S60

07-30-04

Back to Table of Contents

DIST	COUNTY	ROUTE	KILOMETER POST TOTAL PROJECT	SHEET NO.	TOTAL SHEETS

REGISTERED CIVIL ENGINEER

July 1, 2004
PLANS APPROVAL DATE

REGISTERED PROFESSIONAL ENGINEER Tiliat Sattar No. C42892 Exp. 03-31-2006 CIVIL STATE OF CALIFORNIA

The State of California or its officers or agents shall not be responsible for the accuracy or completeness of electronic copies of this plan sheet.

To get to the Caltrans web site, go to: http://www.dot.ca.gov

Caltrans Metric

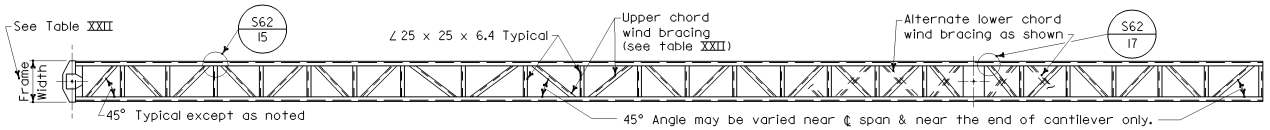

PLAN

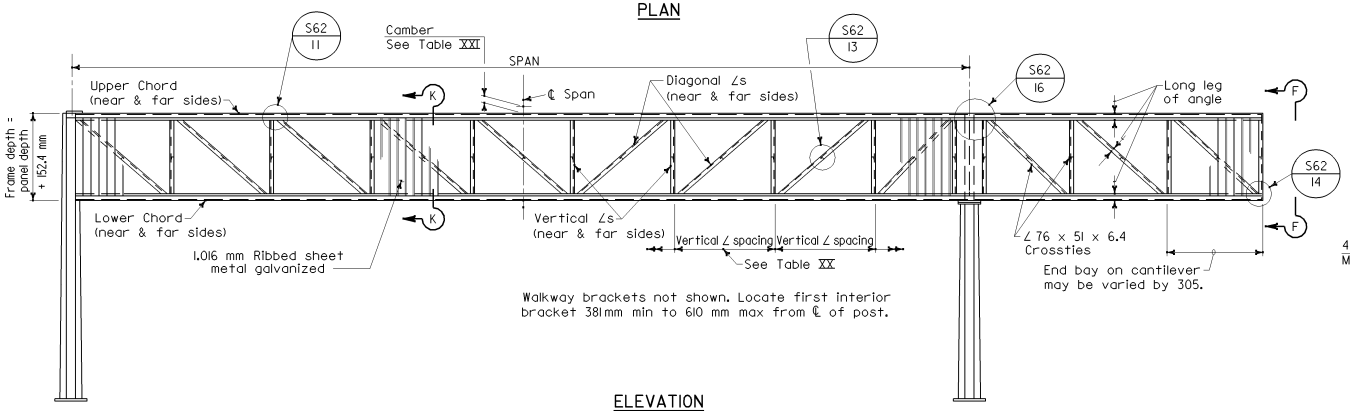

ELEVATION

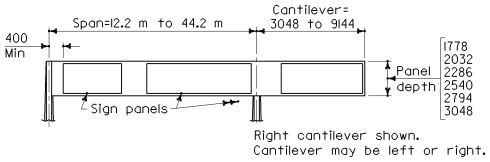

RANGE OF STRUCTURE SIZES

TABLE XXII

Span (m)	1778 mm Panel Depth					2032 mm Panel Depth					2286 mm Panel Depth				
	Frame Width (mm)	Chord L's	Vertical L's	Diagonal L's	Wind Bracing L's	Frame Width (mm)	Chord L's	Vertical L's	Diagonal L's	Wind Bracing L's	Frame Width (mm)	Chord L's	Vertical L's	Diagonal L's	Wind Bracing L's
12.2-15.4	610	127x76x11.1	76x76x7.9	76x76x6.4	38x38x6.4	610	127x76x11.1	76x76x7.9	76x76x6.4	38x38x6.4	610	127x76x11.1	76x76x7.9	76x76x7.9	38x38x6.4
15.5-18.5		127x76x11.1					127x76x11.1					127x76x11.1			
18.6-21.5		127x76x11.1					127x76x11.1					127x76x11.1			
21.6-24.6		127x76x11.1					127x76x11.1					127x89x12.7			
24.7-27.6		127x89x12.7					127x89x12.7					127x89x12.7			
27.7-30.7		127x89x15.9					127x89x15.9					127x89x15.9			
30.8-33.7		152x102x14.3					152x102x14.3					152x102x14.3			
33.8-36.8		152x102x15.9					152x102x15.9					152x102x15.9			
36.9-40.4		178x102x19.0				762	178x102x15.9			51x51x6.4	762	178x102x15.9			51x51x6.4
40.5-44.2	762	178x102x19.0			51x51x6.4	762	178x102x19.0			51x51x6.4	762	178x102x19.0			51x51x6.4

Span (m)	2540 mm Panel Depth					2794 mm Panel Depth					3048 mm Panel Depth				
	Frame Width (mm)	Chord L's	Vertical L's	Diagonal L's	Wind Bracing L's	Frame Width (mm)	Chord L's	Vertical L's	Diagonal L's	Wind Bracing L's	Frame Width (mm)	Chord L's	Vertical L's	Diagonal L's	Wind Bracing L's
12.2-15.4	610	127x76x11.1	76x76x7.9	76x76x7.9	38x38x6.4	610	127x76x11.1	89x89x7.9	89x89x7.9	38x38x6.4	610	127x76x11.1	89x89x7.9	101.6x89x7.9	38x38x6.4
15.5-18.5		127x76x11.1					127x76x11.1					127x76x11.1			
18.6-21.5		127x76x11.1					127x76x11.1					127x89x12.7			
21.6-24.6		127x89x12.7					127x89x15.9					127x89x15.9			
24.7-27.6		127x89x15.9					152x102x14.3					152x102x14.3			
27.7-30.7		152x102x14.3					152x102x14.3					178x102x15.9			
30.8-33.7		152x102x15.9					178x102x15.9					178x102x19.0			51x51x6.4
33.8-36.8		178x102x19.0				762	178x102x15.9			51x51x6.4	762	203x102x19.0			51x51x6.4
36.9-40.4	762	178x102x19.0			51x51x6.4	762	178x102x19.0			51x51x6.4	762	203x102x19.0			51x51x6.4
40.5-44.2	762	203x102x19.0			51x51x6.4	762	203x102x22.2			51x51x6.4	762	203x102x22.2			51x51x6.4

TABLE XX

Panel Depth (mm)	Frame Depth (mm)	Max Vertical ∠ Spacing (mm)
1778	1931	1829
2032	2185	1829
2286	2439	2286
2540	2693	2286
2794	2947	3048
3048	3201	3048

TABLE XXI

Fabrication Camber At ℄ Span	
Span (m)	Camber (mm)
12.2 - 21.5	25
21.6 - 30.7	45
30.8 - 36.8	57
36.9 - 44.2	70

Camber of cantilever arm = + 13 mm for arms greater than 3.05 m.

Camber to approximate parabola.

NOTES

1. Frame widths shown are nominal. These widths may be varied by 6 mm to standardize fabrication methods.
2. For View F-F see S64
3. For Section K-K see S62
4. For Foundation details see S60
5. For General Notes see S1

STATE OF CALIFORNIA
DEPARTMENT OF TRANSPORTATION

OVERHEAD SIGNS-BOX BEAM CLOSED TRUSS-TWO POST TYPE FRAME MEMBERS

NO SCALE

ALL DIMENSIONS ARE IN MILLIMETERS UNLESS OTHERWISE SHOWN

S61

06-22-04

2004 Std PLAN S61

Back to Table of Contents

DIST	COUNTY	ROUTE	KILOMETER POST TOTAL PROJECT	SHEET NO.	TOTAL SHEETS

Caltrans Metric

REGISTERED CIVIL ENGINEER

July 1, 2004
PLANS APPROVAL DATE

REGISTERED PROFESSIONAL ENGINEER Tillat Sattar No. C42892 Exp. 03-31-2006 CIVIL STATE OF CALIFORNIA

The State of California or its officers or agents shall not be responsible for the accuracy or completeness of electronic copies of this plan sheet.

To get to the Caltrans web site, go to: http://www.dot.ca.gov

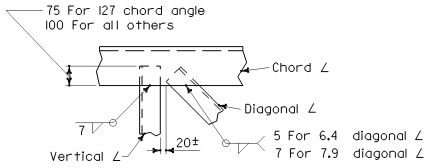

DETAIL 11

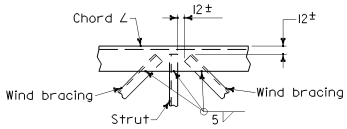

DETAIL 15

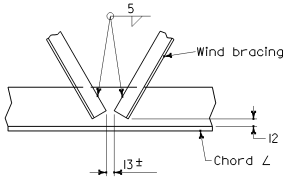

DETAIL 12

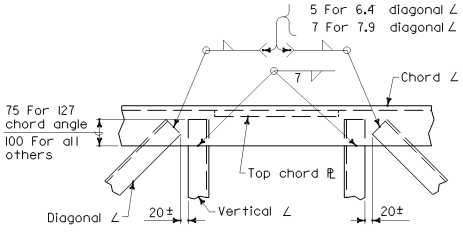

DETAIL 16

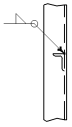

DETAIL 13

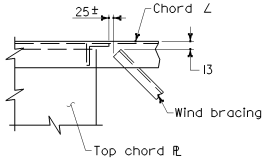

DETAIL 17

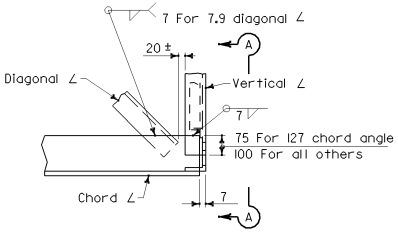

DETAIL 14

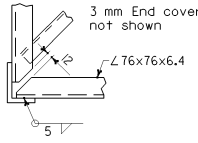

SECTION A-A

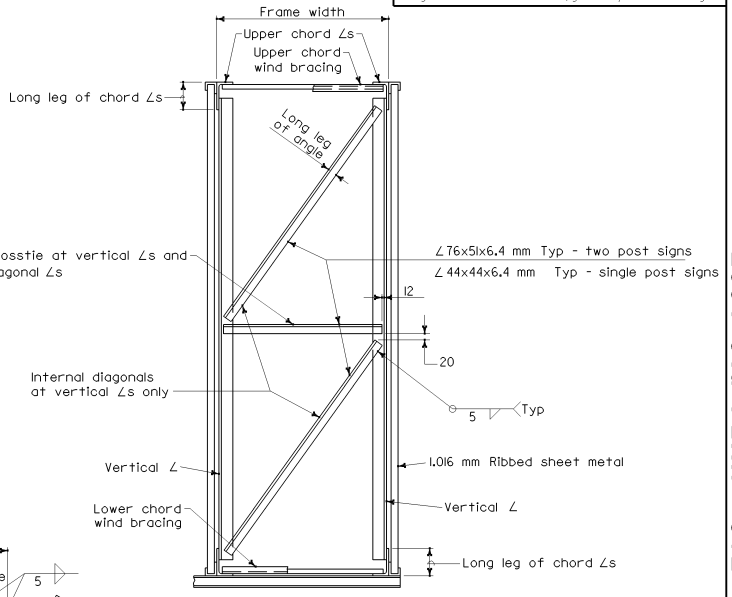

TYPICAL SECTION K-K

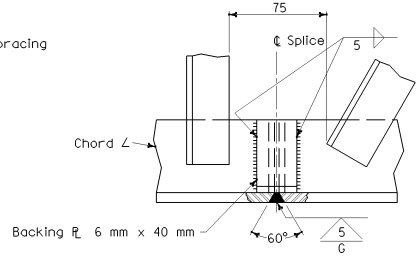

WELD CHORD SPLICE

SPLICE NOTES

1. The splice shall be located so as not to interfere with mounting the walkway brackets.
2. Alternative splice details may be used if approved by the Engineer.

STATE OF CALIFORNIA
DEPARTMENT OF TRANSPORTATION

OVERHEAD SIGNS-BOX BEAM CLOSED TRUSS SINGLE AND TWO POST TYPE GENERAL FRAME DETAILS

NO SCALE

ALL DIMENSIONS ARE IN MILLIMETERS UNLESS OTHERWISE SHOWN

S62

06-22-04

Back to Table of Contents

DIST	COUNTY	ROUTE	KILOMETER POST TOTAL PROJECT	SHEET NO.	TOTAL SHEETS

REGISTERED CIVIL ENGINEER

July 1, 2004
PLANS APPROVAL DATE

REGISTERED PROFESSIONAL ENGINEER Tiliat Sattar NO. C42892 Exp. 03-31-2006 CIVIL STATE OF CALIFORNIA

The State of California or its officers or agents shall not be responsible for the accuracy or completeness of electronic copies of this plan sheet.

To get to the Caltrans web site, go to: http://www.dot.ca.gov

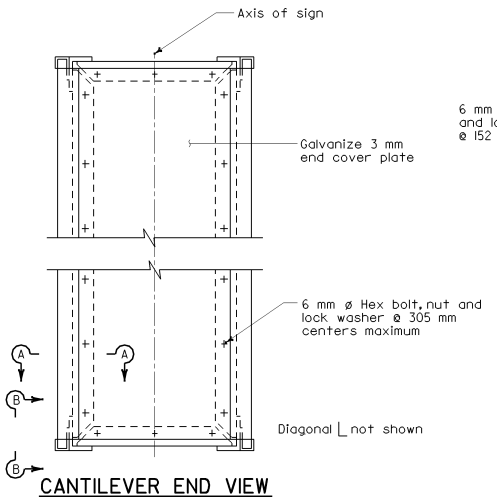

CANTILEVER END VIEW

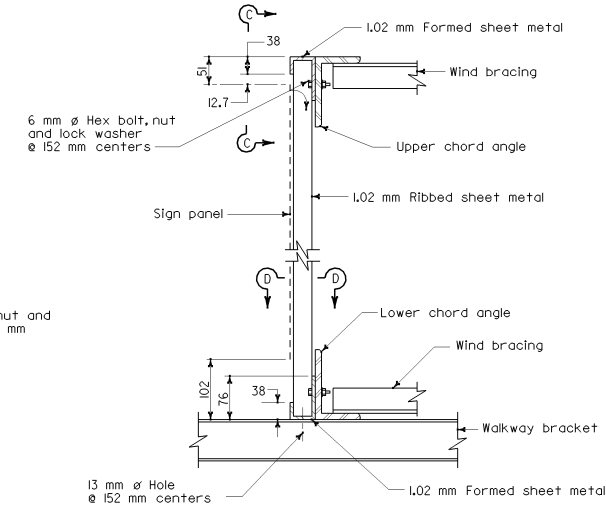

TYPICAL SECTION

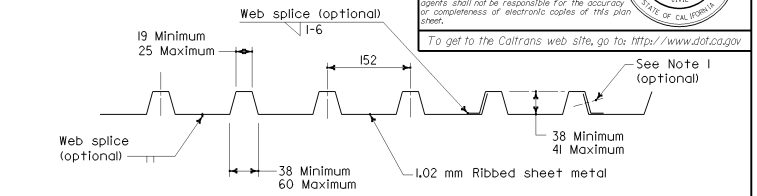

SECTION D-D

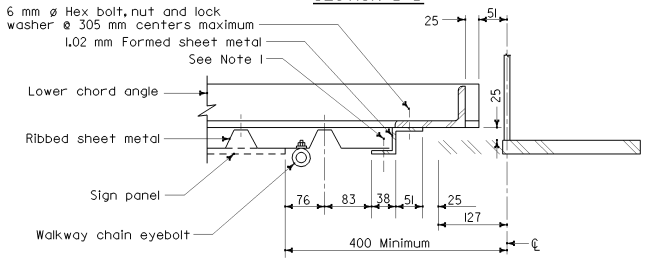

HORIZONTAL SECTION AT POST TWO POST TYPE

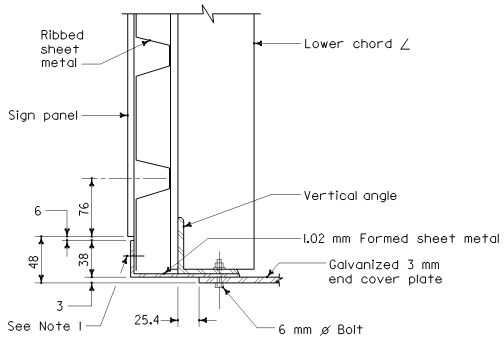

SECTION A-A

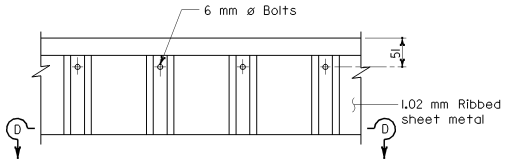

SECTION B-B

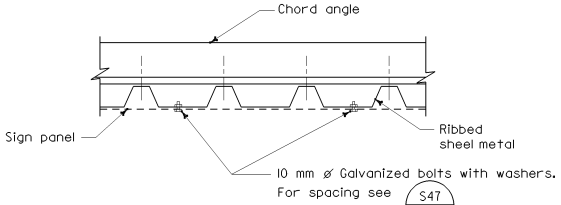

MOUNTING DETAILS FOR OVERHEAD FORMED PANELS

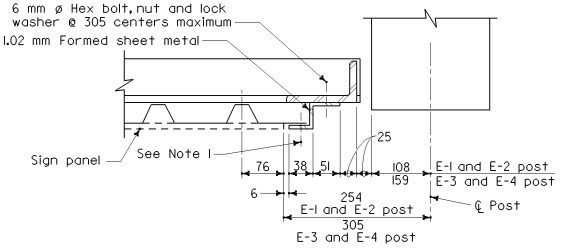

HORIZONTAL SECTION AT POST CANTILEVER TYPE

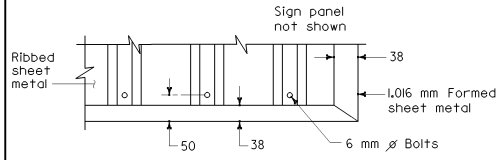

SECTION B-B

NOTES

1. Approved blind rivets 5 mm diameter @ 152 mm centers.
2. For mounting details of laminated panel signs see S47. Panel shall cover ribbed sheet metal by 76 mm or more.

STATE OF CALIFORNIA
DEPARTMENT OF TRANSPORTATION

OVERHEAD SIGNS-BOX BEAM CLOSED TRUSS RIBBED SHEET METAL DETAILS

NO SCALE

ALL DIMENSIONS ARE IN MILLIMETERS UNLESS OTHERWISE SHOWN

S63

07-30-04

Back to Table of Contents

DIST	COUNTY	ROUTE	KILOMETER POST TOTAL PROJECT	SHEET NO.	TOTAL SHEETS

Caltrans Metric

REGISTERED CIVIL ENGINEER

July 1, 2004
PLANS APPROVAL DATE

REGISTERED PROFESSIONAL ENGINEER Tillat Sattar No. C42892 Exp. 03-31-2006 CIVIL STATE OF CALIFORNIA

The State of California or its officers or agents shall not be responsible for the accuracy or completeness of electronic copies of this plan sheet.

To get to the Caltrans web site, go to: http://www.dot.ca.gov

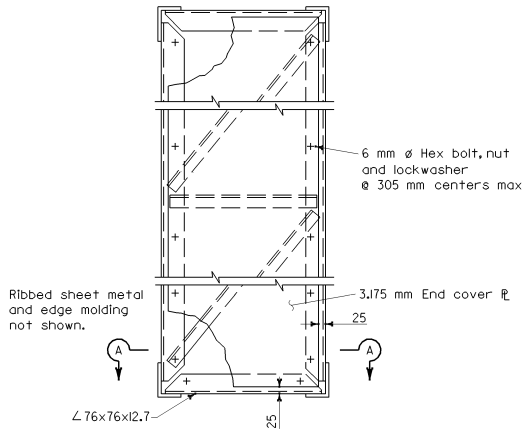

SECTION F-F
At cantilever end

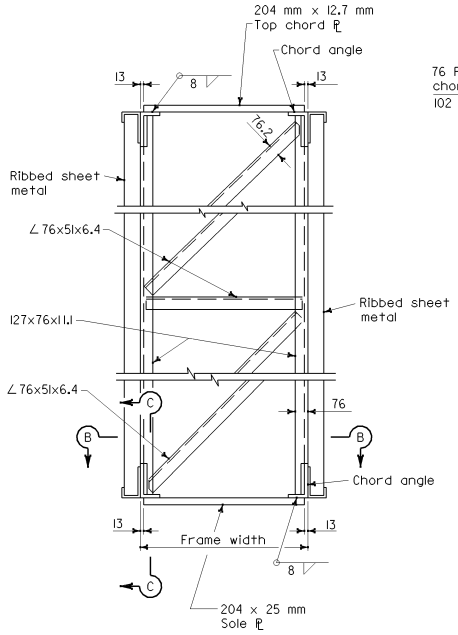

POST END VIEW

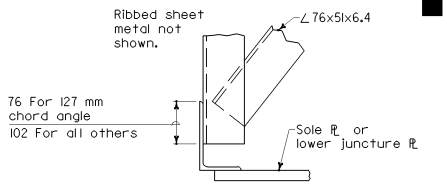

DETAIL D

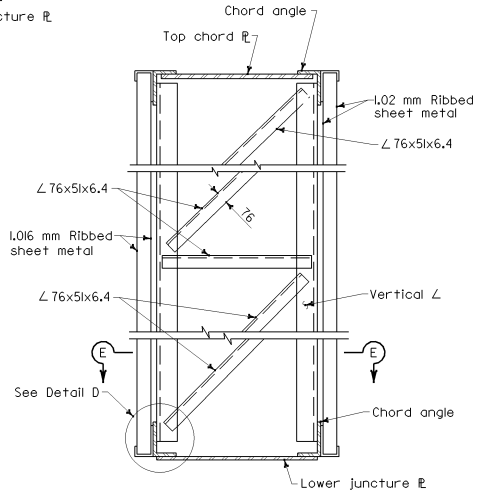

SECTION AT INSET POST

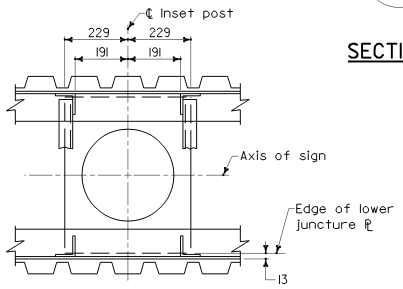

SECTION E-E

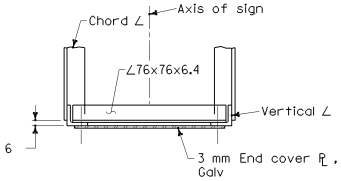

SECTION A-A

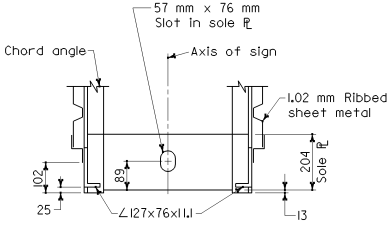

SECTION B-B

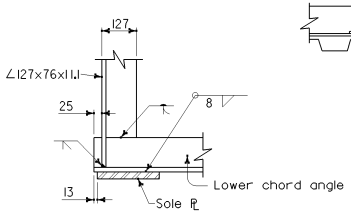

SECTION C-C

STATE OF CALIFORNIA
DEPARTMENT OF TRANSPORTATION

OVERHEAD SIGNS-BOX BEAM CLOSED TRUSS-TWO POST TYPE FRAME DETAILS

NO SCALE

ALL DIMENSIONS ARE IN MILLIMETERS UNLESS OTHERWISE SHOWN

S64

07-30-04

Back to Table of Contents

Caltrans Metric

DIST	COUNTY	ROUTE	KILOMETER POST TOTAL PROJECT	SHEET NO.	TOTAL SHEETS

REGISTERED CIVIL ENGINEER

July 1, 2004
PLANS APPROVAL DATE

REGISTERED PROFESSIONAL ENGINEER Tiliat Sattar No. C42892 Exp. 03-31-2006 CIVIL STATE OF CALIFORNIA

The State of California or its officers or agents shall not be responsible for the accuracy or completeness of electronic copies of this plan sheet.

To get to the Caltrans web site, go to: http://www.dot.ca.gov

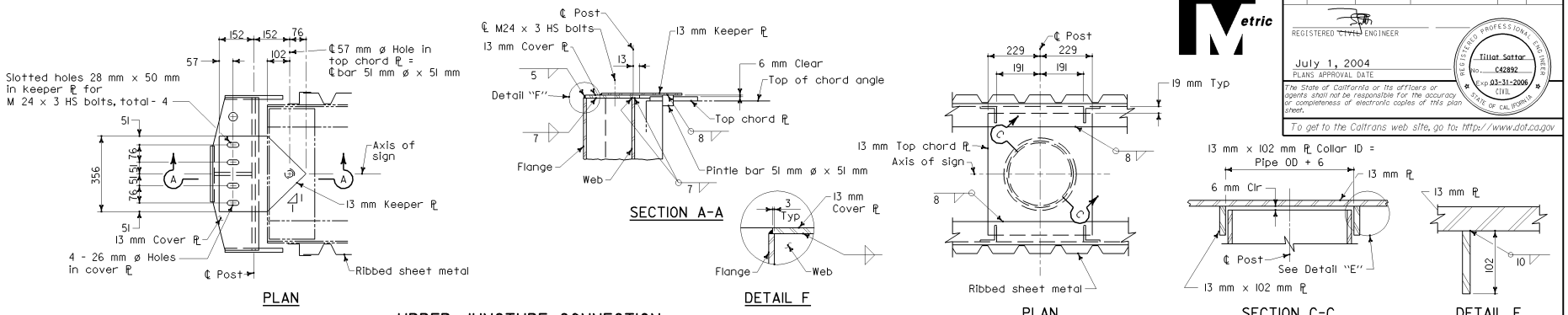

UPPER JUNCTURE CONNECTION
END POST

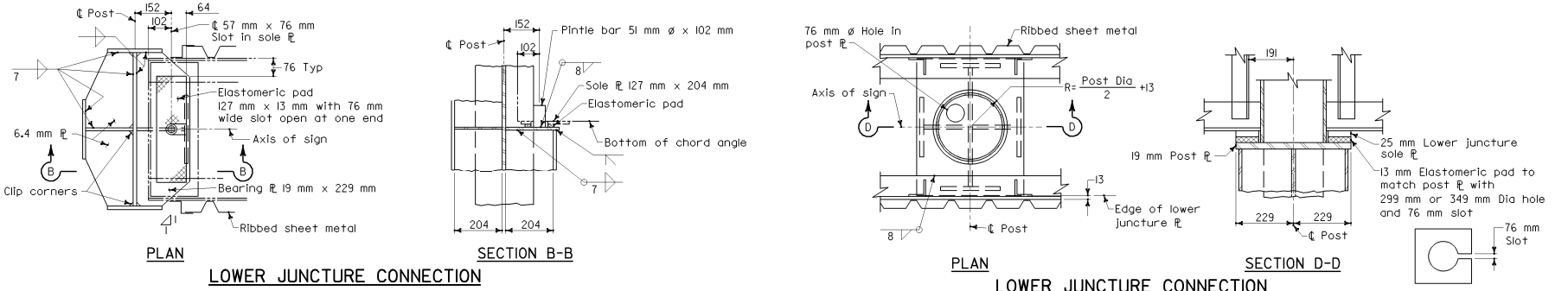

LOWER JUNCTURE CONNECTION
END POST

LOWER JUNCTURE CONNECTION
INSET POST

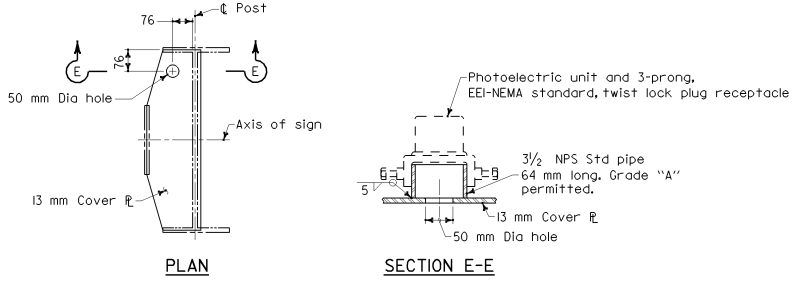

PHOTOELECTRIC CONTROL UNIT

STATE OF CALIFORNIA
DEPARTMENT OF TRANSPORTATION

OVERHEAD SIGNS-BOX BEAM CLOSED TRUSS-TWO POST TYPE FRAME JUNCTURE DETAILS

NO SCALE

ALL DIMENSIONS ARE IN MILLIMETERS UNLESS OTHERWISE SHOWN

S65

08-05-04

Back to Table of Contents

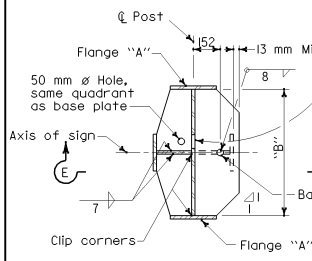

SECTION A-A

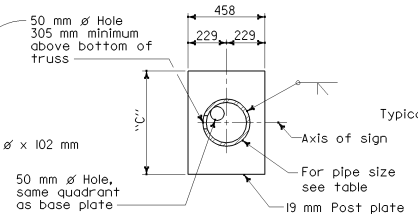

SECTION B-B

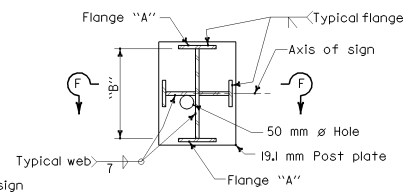

SECTION C-C

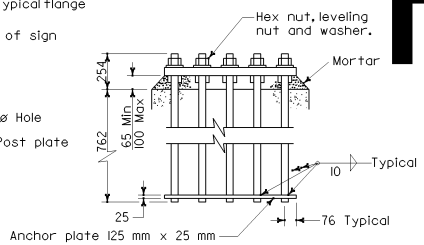

ANCHORAGE DETAILS

NOTE

For dimensions not shown see table

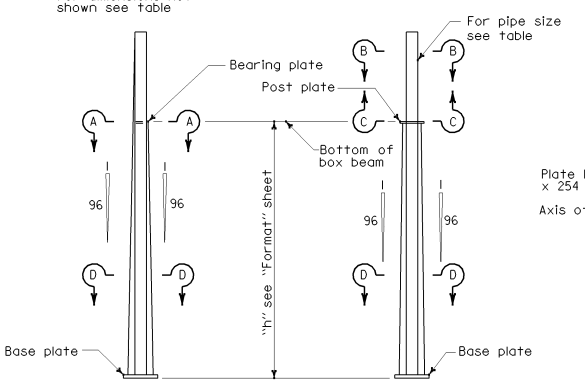

END POST
"A" and "B"

ELEVATION

INSET POST
"C" and "D"

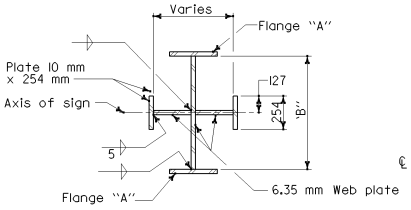

SECTION D-D

NOTE

Locate 75 mm ø hole for conduit in quadrant away from approaching traffic-center 51 mm from web plates.

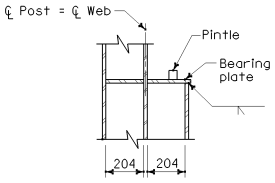

SECTION E-E

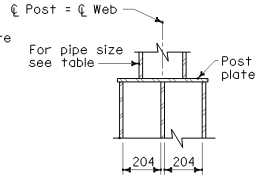

SECTION F-F

POST TYPE	BASE PLATE (mm)	ANCHOR BOLTS		FLANGE	POST OR BEARING PLATE		INSET POST	
							PIPE SIZE	
		Dia (mm)	No	"A" (mm)	"B" (mm)	"C" (mm)	NPS	WALL THICKNESS (mm)
A-1	51x610x1016	64	6	9.5x254	661			
A-2	64x610x1016	64	8	12.7x254	661			
A-3	64x610x1016	64	8	19.0x254	661			
A-4	64x610x1016	64	8	25.4x254	661			
A-5	64x610x1016	64	8	31.8x254	661			
B-1	51x762x1143	57	8	12.7x254	813			
B-2	51x762x1143	64	8	19x254	813			
B-3	64x762x1194	64	8	25.4x254	813			
B-4	64x762x1194	64	8	31.8x254	813			
B-5	64x762x1194	64	10	38.1x254	813			
C-1	51x610x839	57	6	12.7x254	508	610	10	10.03
C-2	64x762x915	57	8	19x254	508	610	10	13.49
C-3	64x762x915	64	8	25.4x254	508	610	10	18.24
C-4	70x762x915	64	8	31.8x254	508	610	10	25.4
C-5	70x762x915	64	10	38.1x254	508	610	10	26.97
C-6	70x966x966	64	10	44.4x254	508	648	10	26.97
C-7	70x966x966	64	10	50.8x254	508	648	10	26.97
C-8	70x966x966	64	10	57.1x254	508	648	10	26.97
D-1	64x610x1016	64	8	19x254	661	762	12	12.7
D-2	70x762x1067	64	8	25.4x254	661	762	12	15.88
D-3	70x762x1067	64	10	31.8x254	661	762	12	21.41
D-4	64x966x1067	64	10	38.1x254	661	762	12	21.41
D-5	64x966x1067	64	10	44.4x254	661	800	12	21.41
D-6	76x966x1194	64	10	50.8x254	661	800	12	21.41
D-7	76x966x1194	64	10	57.1x254	661	800	12	21.41

1. Thread upper 260 mm of anchor bolts and galvanize upper 305 mm.
2. Anchor plates may be retained with Hex nut or formed head.
3. 64 mm ø Anchor bolts may be substituted for 57 mm ø bolts.
4. For foundation details see S60

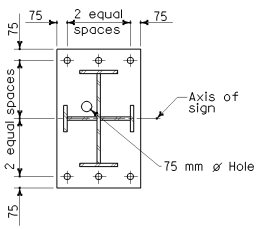

6 BOLTS

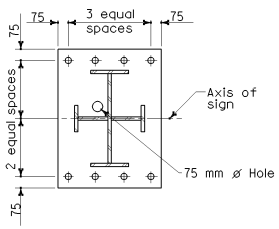

8 BOLTS

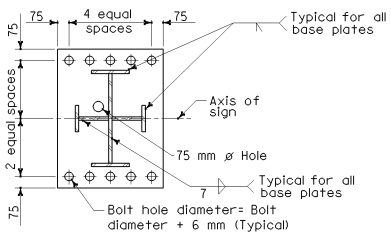

10 BOLTS

TYPICAL BASE PLATES

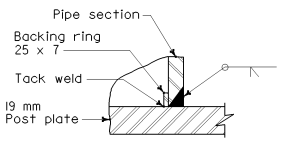

PIPE SECTION TO POST PLATE

Caltrans Metric

DIST	COUNTY	ROUTE	KILOMETER POST TOTAL PROJECT	SHEET NO.	TOTAL SHEETS

REGISTERED CIVIL ENGINEER

July 1, 2004
PLANS APPROVAL DATE

REGISTERED PROFESSIONAL ENGINEER Tillat Sattar No. C42892 Exp. 03-31-2006 CIVIL STATE OF CALIFORNIA

The State of California or its officers or agents shall not be responsible for the accuracy or completeness of electronic copies of this plan sheet.

To get to the Caltrans web site, go to: http://www.dot.ca.gov

STATE OF CALIFORNIA
DEPARTMENT OF TRANSPORTATION

OVERHEAD SIGNS-BOX BEAM CLOSED TRUSS-TWO POST TYPE POST DETAILS

NO SCALE

ALL DIMENSIONS ARE IN MILLIMETERS UNLESS OTHERWISE SHOWN

S66

07-30-04

Back to Table of Contents

DIST	COUNTY	ROUTE	KILOMETER POST TOTAL PROJECT	SHEET NO.	TOTAL SHEETS

REGISTERED ~~CIVIL~~ ENGINEER

July 1, 2004
PLANS APPROVAL DATE

REGISTERED PROFESSIONAL ENGINEER Tiliat Sattar NO. C42892 Exp. 03-31-2006 CIVIL STATE OF CALIFORNIA

The State of California or its officers or agents shall not be responsible for the accuracy or completeness of electronic copies of this plan sheet.

To get to the Caltrans web site, go to: http://www.dot.ca.gov

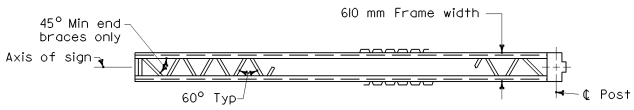

PLAN

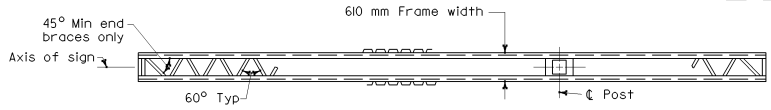

PLAN

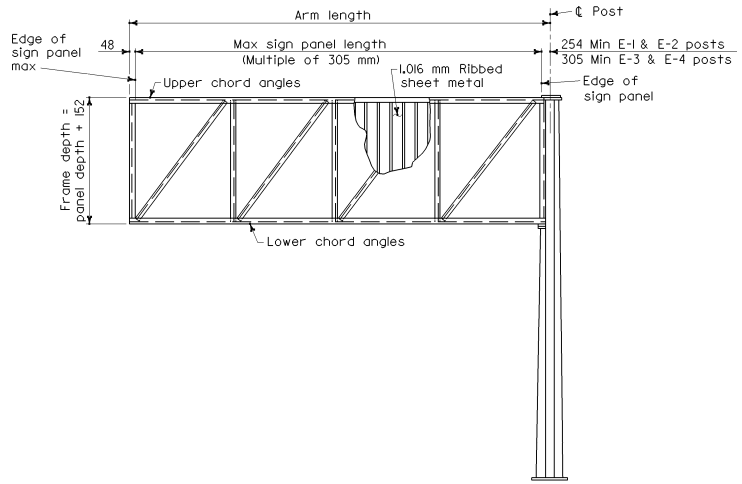

ELEVATION - CANTILEVER

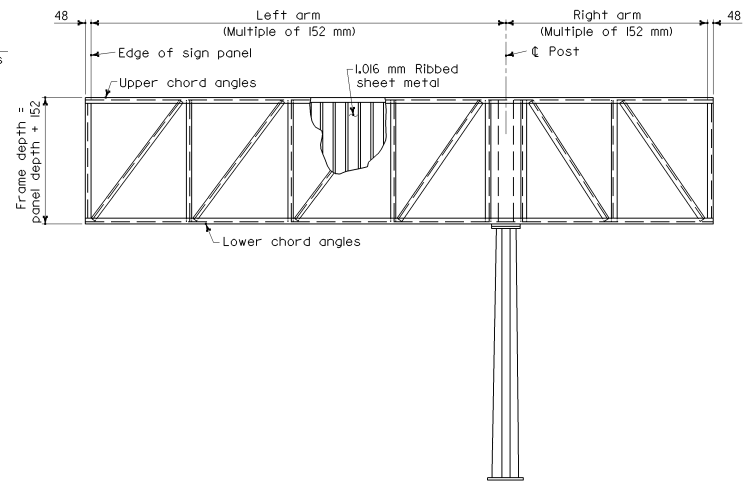

ELEVATION - BUTTERFLY

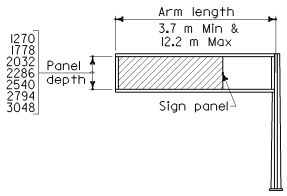

CANTILEVER

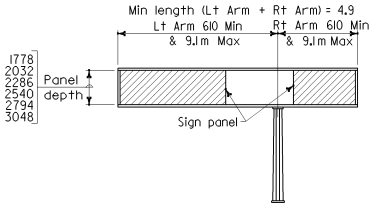

BUTTERFLY

RANGE OF STRUCTURE SIZES

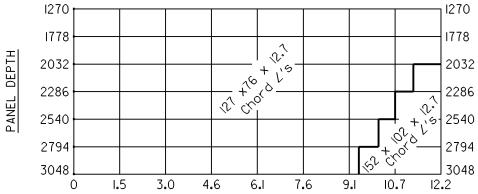

ARM LENGTH (m)

TABLE XXIII

UPPER AND LOWER CHORD ANGLE SELECTION CHART

(See Notes)

NOTES

1. For butterfly, use chord angle size determined by longer arm for both sides.
2. For size of vertical and diagonal angles, see S68 and S71
3. For foundation details see S60

STATE OF CALIFORNIA
DEPARTMENT OF TRANSPORTATION

OVERHEAD SIGNS-BOX BEAM CLOSED TRUSS SINGLE POST TYPE FRAME MEMBERS

NO SCALE

ALL DIMENSIONS ARE IN MILLIMETERS UNLESS OTHERWISE SHOWN

S67

07-30-04

Back to Table of Contents

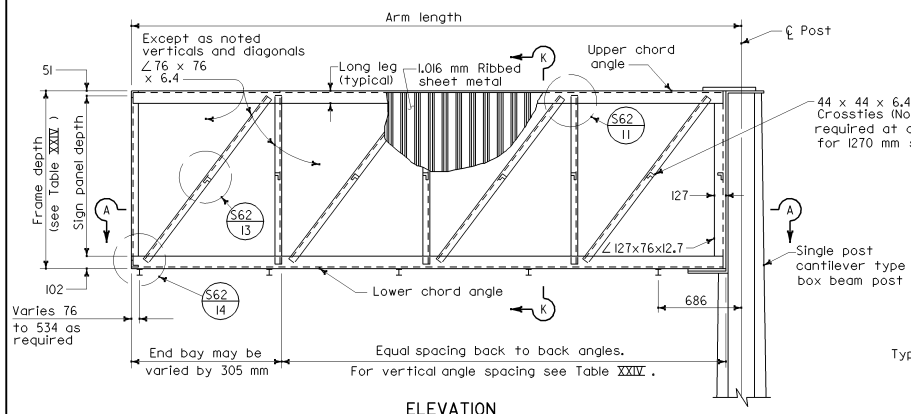

ELEVATION

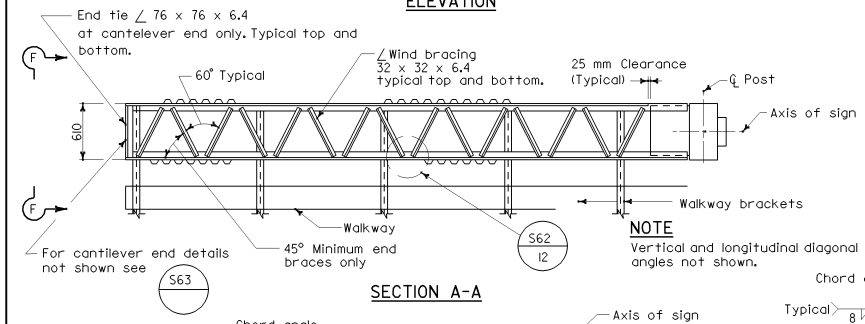

SECTION A-A

NOTE

Vertical and longitudinal diagonal angles not shown.

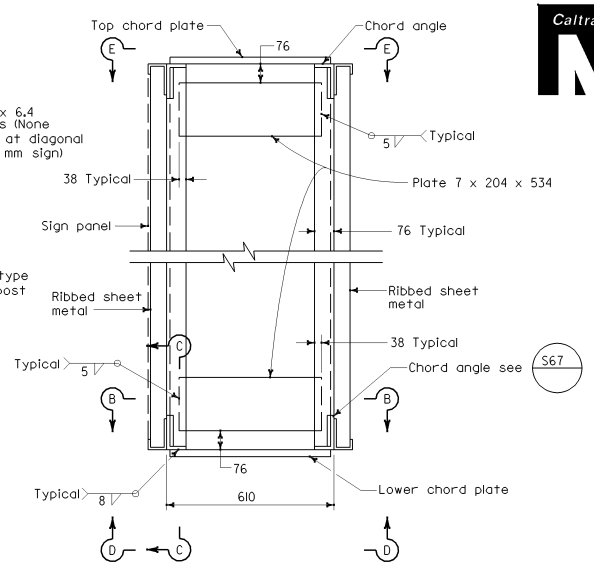

POST END VIEW

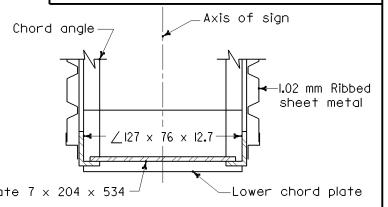

SECTION B-B

NOTES

1. For Section K-K see S62
2. For View F-F at cantilever end, see S64

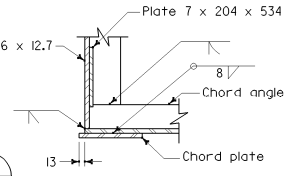

SECTION C-C

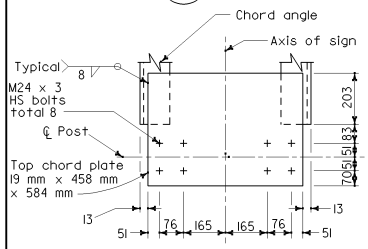

SECTION E-E

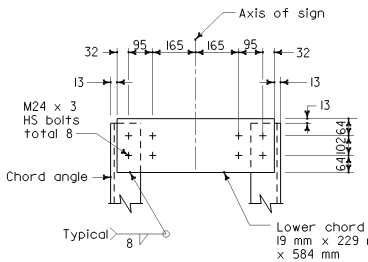

SECTION D-D

TYPE E-1 AND TYPE E-2

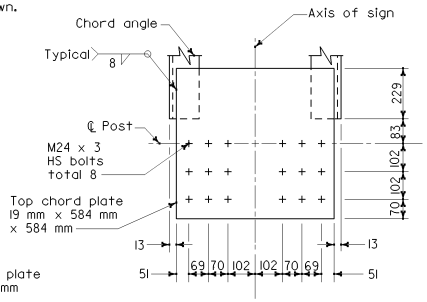

SECTION E-E

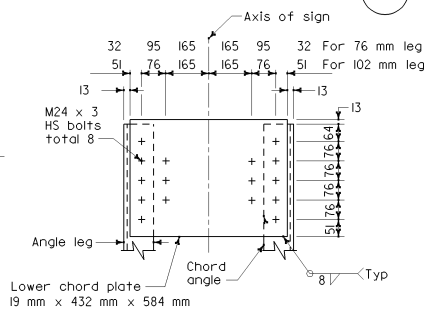

SECTION D-D

TYPE E-3 AND TYPE E-4

CHORD PLATE DETAILS

TABLE XXIV

SIGN PANEL DEPTH (mm)	FRAME DEPTH (mm)	MAXIMUM VERTICAL ANGLE SPACING (mm)
1270	1423	1372
1778	1931	1677
2032	2185	1829
2286	2439	2134
2540	2693	2134
2794	2947	2286
3048	3201	2286

Caltrans Metric

DIST	COUNTY	ROUTE	KILOMETER POST TOTAL PROJECT	SHEET NO.	TOTAL SHEETS

REGISTERED CIVIL ENGINEER

July 1, 2004
PLANS APPROVAL DATE

REGISTERED PROFESSIONAL ENGINEER Tillat Sattar No. C42892 Exp. 03-31-2006 CIVIL STATE OF CALIFORNIA

The State of California or its officers or agents shall not be responsible for the accuracy or completeness of electronic copies of this plan sheet.

To get to the Caltrans web site, go to: http://www.dot.ca.gov

STATE OF CALIFORNIA
DEPARTMENT OF TRANSPORTATION

OVERHEAD SIGNS-BOX BEAM CLOSED TRUSS SINGLE POST CANTILEVER FRAME DETAILS

NO SCALE

ALL DIMENSIONS ARE IN MILLIMETERS UNLESS OTHERWISE SHOWN

S68

07-30-04

Back to Table of Contents

DIST	COUNTY	ROUTE	KILOMETER POST TOTAL PROJECT	SHEET NO.	TOTAL SHEETS

REGISTERED CIVIL ENGINEER

July 1, 2004
PLANS APPROVAL DATE

REGISTERED PROFESSIONAL ENGINEER Tiliat Sattar No. C42892 Exp. 03-31-2006 CIVIL STATE OF CALIFORNIA

The State of California or its officers or agents shall not be responsible for the accuracy or completeness of electronic copies of this plan sheet.

To get to the Caltrans web site, go to: http://www.dot.ca.gov

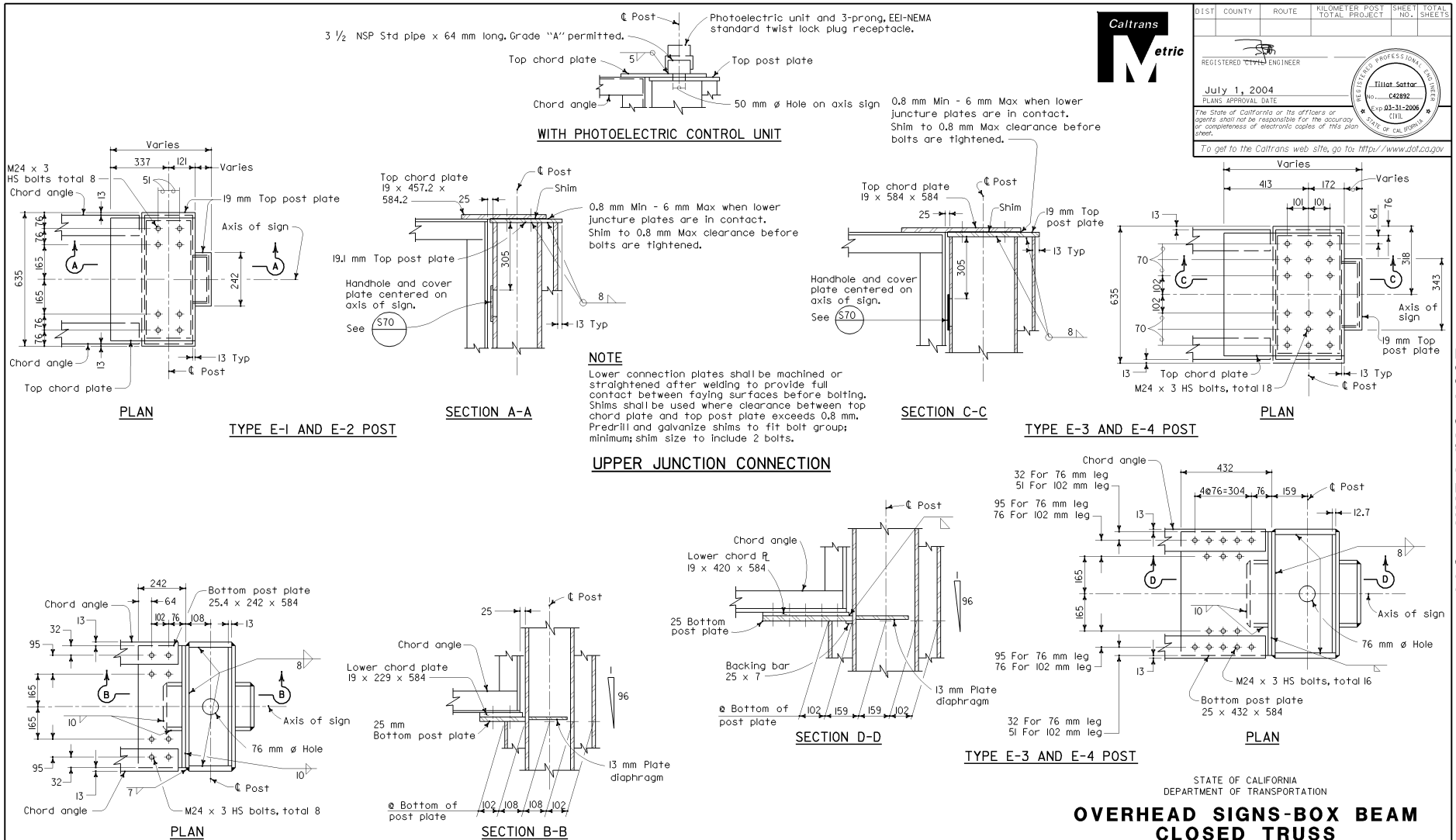

STATE OF CALIFORNIA
DEPARTMENT OF TRANSPORTATION

OVERHEAD SIGNS-BOX BEAM CLOSED TRUSS SINGLE POST CANTILEVER FRAME JUNCTURE DETAILS

NO SCALE

ALL DIMENSIONS ARE IN MILLIMETERS UNLESS OTHERWISE SHOWN

S69

08-05-04

Back to Table of Contents

DIST	COUNTY	ROUTE	KILOMETER POST TOTAL PROJECT	SHEET NO.	TOTAL SHEETS

REGISTERED ~~CIVIL~~ ENGINEER

July 1, 2004
PLANS APPROVAL DATE

REGISTERED PROFESSIONAL ENGINEER Tillat Sattar No. C42892 Exp. 03-31-2006 CIVIL STATE OF CALIFORNIA

The State of California or its officers or agents shall not be responsible for the accuracy or completeness of electronic copies of this plan sheet.

To get to the Caltrans web site, go to: http://www.dot.ca.gov

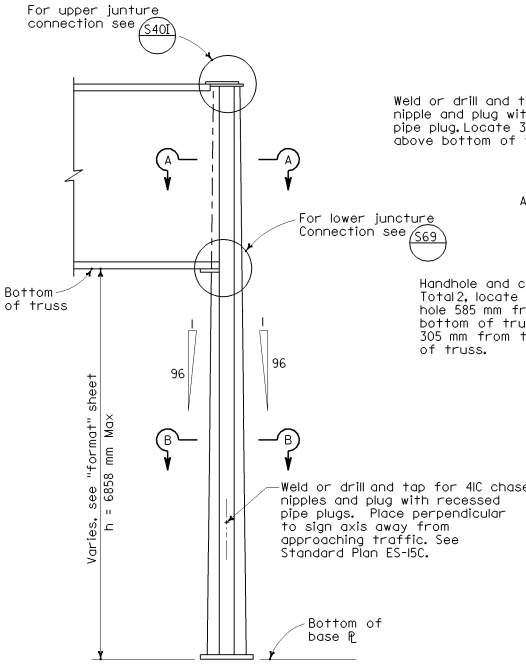

ELEVATION

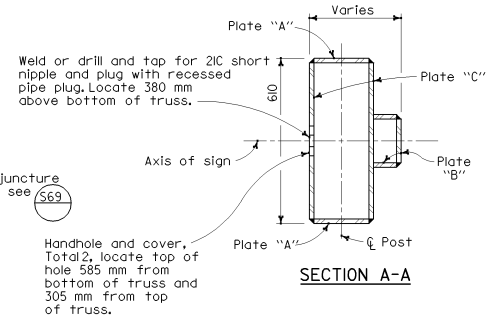

SECTION A-A

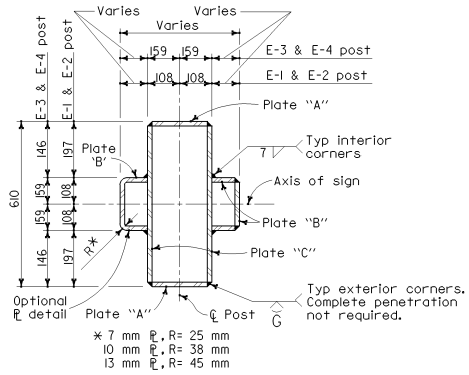

SECTION B-B

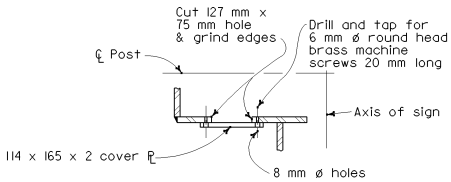

NOTE

Face handhole and cover ℞ away from traveled way except as shown. See "Section A-A".

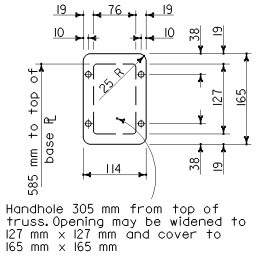

HANDHOLE AND COVER DETAIL

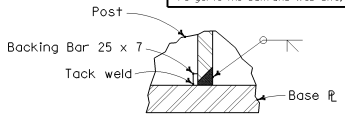

POST TO BASE PLATE WELDING DETAILS

NOTE

1. For foundation details see S60

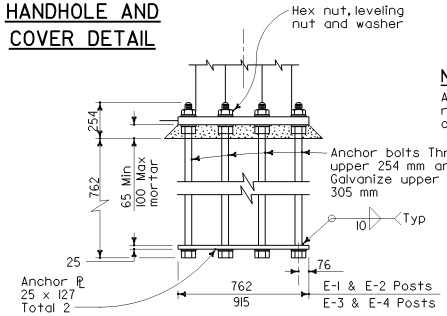

ANCHORAGE DETAILS

NOTE

Anchor ℞s may be retained with hex nuts or formed heads.

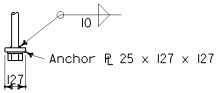

SINGLE SIDE BOLT

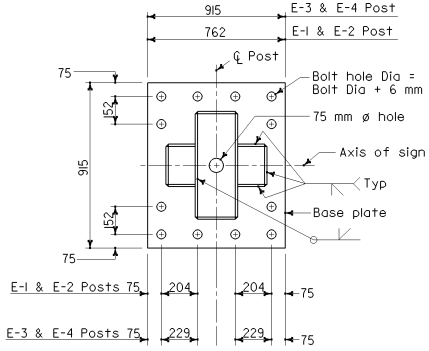

BASE PLATE

Post Type	Base Plate (mm)	Plate "A" (mm)	Plate "B" (mm)	Plate "C" (mm)	* Anchor Bolts (mm)
E-1	51x762x915	12.7	6.4	9.5	12-44 mm ø
E-2	64x762x915	25.4	9.5	12.7	12-51 mm ø
E-3	64x915x915	25.4	9.5	12.7	12-57 mm ø
E-4	64x915x915	25.4	12.7	15.9	12-57 mm ø

* 51 mm ø Anchor bolts may be substituted for 44 mm ø bolts.

STATE OF CALIFORNIA
DEPARTMENT OF TRANSPORTATION

OVERHEAD SIGNS-BOX BEAM CLOSED TRUSS SINGLE POST CANTILEVER POST DETAILS

NO SCALE

ALL DIMENSIONS ARE IN MILLIMETERS UNLESS OTHERWISE SHOWN

S70

08-05-04

Back to Table of Contents

DIST	COUNTY	ROUTE	KILOMETER POST TOTAL PROJECT	SHEET NO.	TOTAL SHEETS

REGISTERED CIVIL ENGINEER

July 1, 2004
PLANS APPROVAL DATE

REGISTERED PROFESSIONAL ENGINEER Iliat Sattar No. C42892 Exp. 03-31-2006 CIVIL STATE OF CALIFORNIA

The State of California or its officers or agents shall not be responsible for the accuracy or completeness of electronic copies of this plan sheet.

To get to the Caltrans web site, go to: http://www.dot.ca.gov

Caltrans Metric

NOTE

Left arm length may be shorter, longer or equal to right arm length.

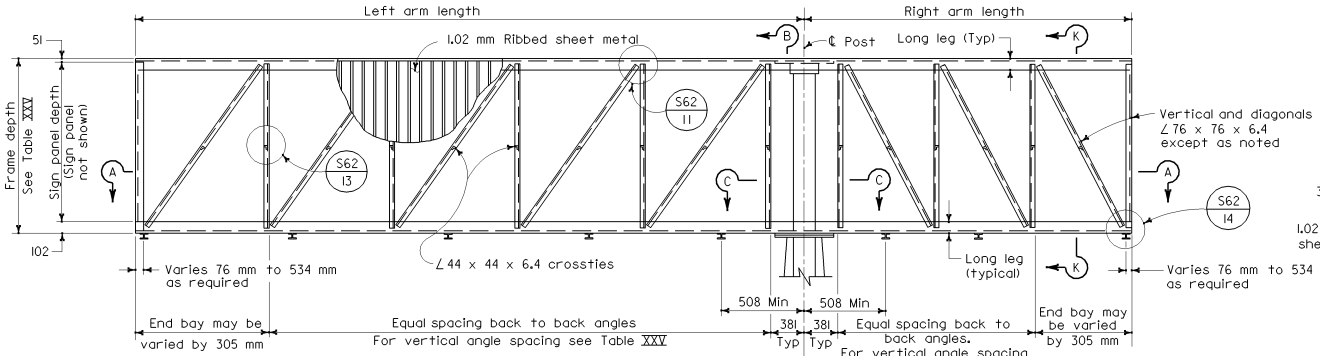

NOTE

Left arm may be shorter, longer or equal to right arm length.

ELEVATION

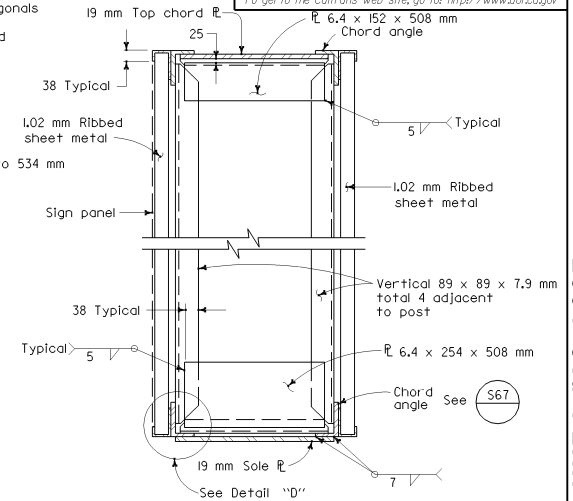

SECTION B-B

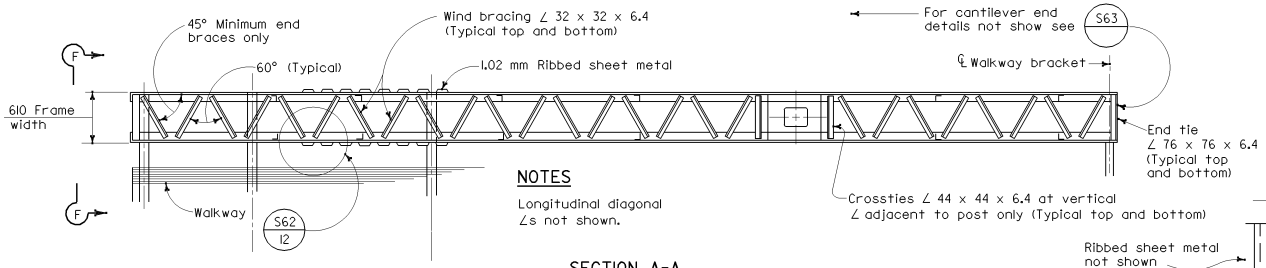

NOTES

Longitudinal diagonal ∠s not shown.

SECTION A-A

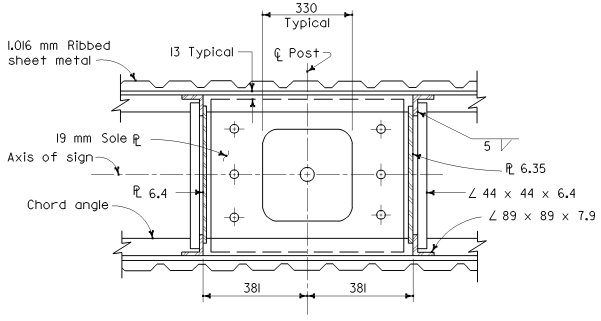

SECTION C-C

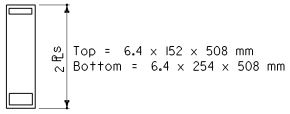

Top = 6.4 x 152 x 508 mm
Bottom = 6.4 x 254 x 508 mm

SIGN DEPTH 1778-2286

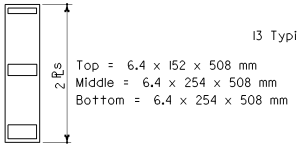

Top = 6.4 x 152 x 508 mm
Middle = 6.4 x 254 x 508 mm
Bottom = 6.4 x 254 x 508 mm

SIGN DEPTH 2540-3048

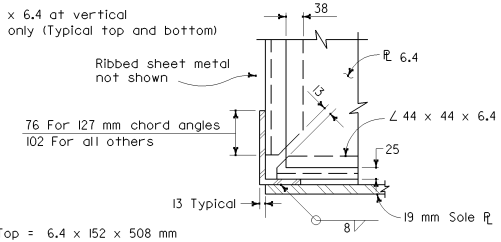

DETAIL D

TABLE XXV

Sign Panel Depth (mm)	Frame Depth (mm)	Maximum Vertical Angle Spacing (mm)	Arm Length (mm)	
1778	1931	1677	1219	No diagonals required
2032	2185	1829	1524	
2286	2439	2134	1524	
2540	2693	2134	1829	
2794	2947	2286	1829	
3048	3201	2286	1829	

NOTES

1. For Detail (11) thru (14) and Section K-K, see (S62)
2. For View F-F at cantilever end, see (S64)

STATE OF CALIFORNIA
DEPARTMENT OF TRANSPORTATION

OVERHEAD SIGNS-BOX BEAM CLOSED TRUSS SINGLE POST BUTTERFLY FRAME DETAILS

NO SCALE

ALL DIMENSIONS ARE IN MILLIMETERS UNLESS OTHERWISE SHOWN

S71

07-30-04

Back to Table of Contents

DIST	COUNTY	ROUTE	KILOMETER POST TOTAL PROJECT	SHEET NO.	TOTAL SHEETS

Caltrans Metric

REGISTERED CIVIL ENGINEER

July 1, 2004
PLANS APPROVAL DATE

REGISTERED PROFESSIONAL ENGINEER Tillat Sattar No. C42892 Exp. 03-31-2006 CIVIL STATE OF CALIFORNIA

The State of California or its officers or agents shall not be responsible for the accuracy or completeness of electronic copies of this plan sheet.

To get to the Caltrans web site, go to: http://www.dot.ca.gov

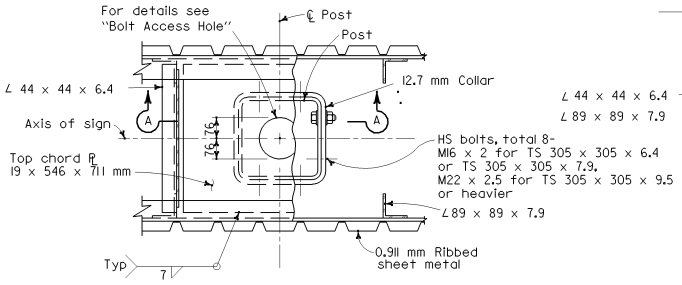

PLAN

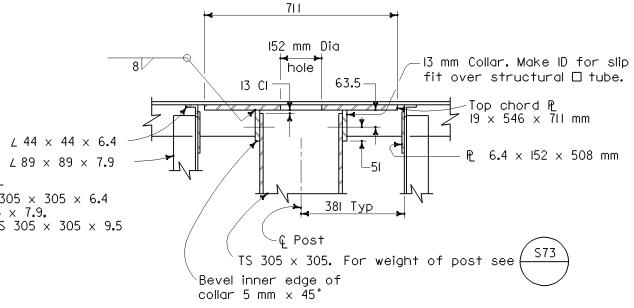

SECTION A-A

UPPER JUNCTURE CONNECTION

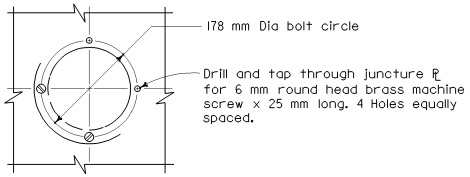

PLAN

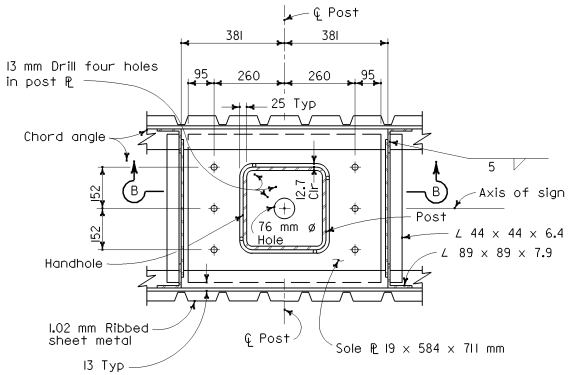

PLAN

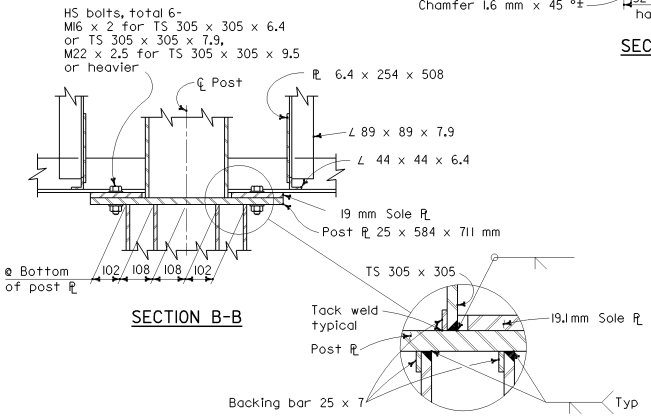

SECTION B-B

NOTE

Lower connection plates shall be machined or straightened after welding to provide full contact between faying surfaces before bolting.

LOWER JUNCTURE CONNECTION

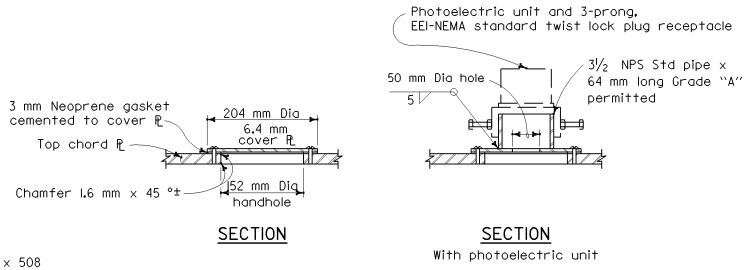

SECTION

SECTION
With photoelectric unit

BOLT ACCESS HOLE

STATE OF CALIFORNIA
DEPARTMENT OF TRANSPORTATION

OVERHEAD SIGNS-BOX BEAM CLOSED TRUSS SINGLE POST BUTTERFLY FRAME JUNCTURE DETAILS

NO SCALE

ALL DIMENSIONS ARE IN MILLIMETERS UNLESS OTHERWISE SHOWN

S72

2004 Std PLAN S72

08-05-04

Back to Table of Contents

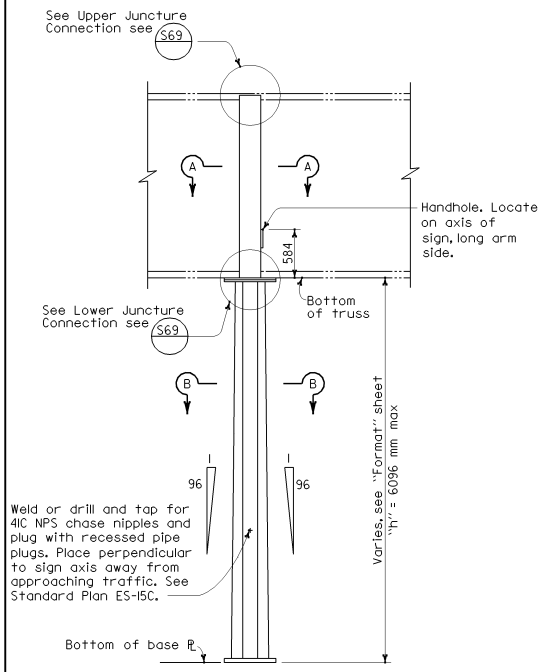

ELEVATION

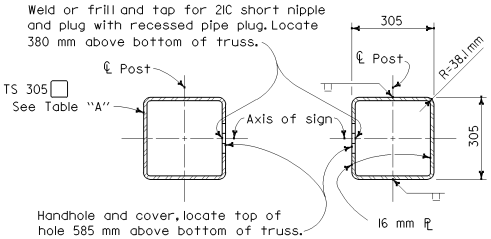

TYPE F-1 THRU F-3 TYPE F-4 AND F-5

SECTION A-A

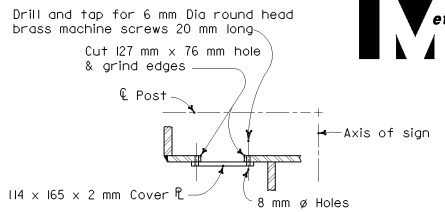

NOTE

Face handhole away from traveled way. On F-1 type post locate handhole on centerline post in Plate "A".

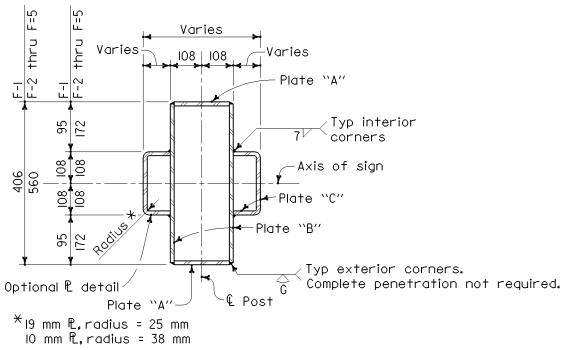

SECTION B-B

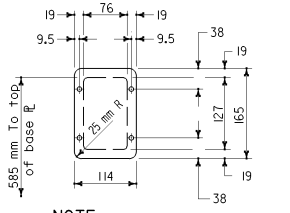

NOTE

For foundation details see S60

HANDHOLE AND COVER DETAIL

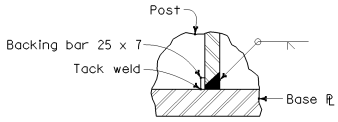

PLATES A, B AND C POST TO BASE PLATE WELDING DETAILS

TABLE "A"						
Post Type	Plate "A" (mm)	Plate "B" (mm)	Plate "C" (mm)	Base Plate (mm)	* Anchor Bolts No & Dia	Structural Tube
F-1	6.4x204	6.4	6.4	51x762x915	8-51 mm ø	305x305x7.9
F-2	12.7x204	6.4	6.4	51x762x915	12-44 mm ø	305x305x9.5
F-3	38.1x204	6.4	6.4	51x762x915	12-51 mm ø	305x305x12.7
F-4	38.1x197	9.5	9.5	64x762x915	12-57 mm ø	See Section A-A
F-5	38.1x178	19.1	19.1	70x762x915	12-57 mm ø	

* 51 mm ø Anchor bolts may be substituted for 44 mm ø bolts.

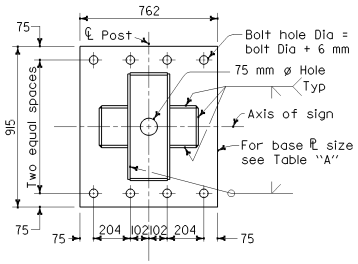

TYPE F-1

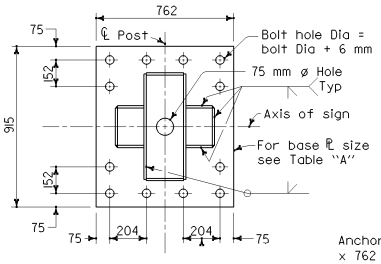

TYPE F-2 THRU F-5

BASE PLATE DETAILS

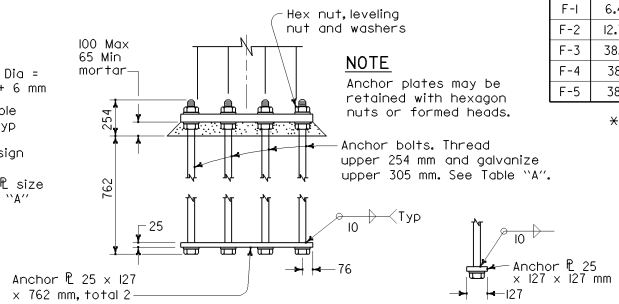

NOTE

Anchor plates may be retained with hexagon nuts or formed heads.

SINGLE SIDE BOLT

ANCHORAGE DETAILS

STATE OF CALIFORNIA
DEPARTMENT OF TRANSPORTATION

OVERHEAD SIGNS-BOX BEAM CLOSED TRUSS SINGLE POST BUTTERFLY POST DETAILS

NO SCALE

ALL DIMENSIONS ARE IN MILLIMETERS UNLESS OTHERWISE SHOWN

S73

Caltrans Metric

DIST	COUNTY	ROUTE	KILOMETER POST TOTAL PROJECT	SHEET NO.	TOTAL SHEETS

REGISTERED CIVIL ENGINEER

July 1, 2004
PLANS APPROVAL DATE

REGISTERED PROFESSIONAL ENGINEER Tiliat Sattar No. C42892 Exp. 03-31-2006 CIVIL STATE OF CALIFORNIA

The State of California or its officers or agents shall not be responsible for the accuracy or completeness of electronic copies of this plan sheet.

To get to the Caltrans web site, go to: http://www.dot.ca.gov

08-02-04

Back to Table of Contents

DIST	COUNTY	ROUTE	KILOMETER POST TOTAL PROJECT	SHEET NO.	TOTAL SHEETS

Caltrans Metric

REGISTERED CIVIL ENGINEER

July 1, 2004
PLANS APPROVAL DATE

REGISTERED PROFESSIONAL ENGINEER
Tillat Sattar
No. C42892
Exp. 03-31-2006
CIVIL
STATE OF CALIFORNIA

The State of California or its officers or agents shall not be responsible for the accuracy or completeness of electronic copies of this plan sheet.

To get to the Caltrans web site, go to: http://www.dot.ca.gov

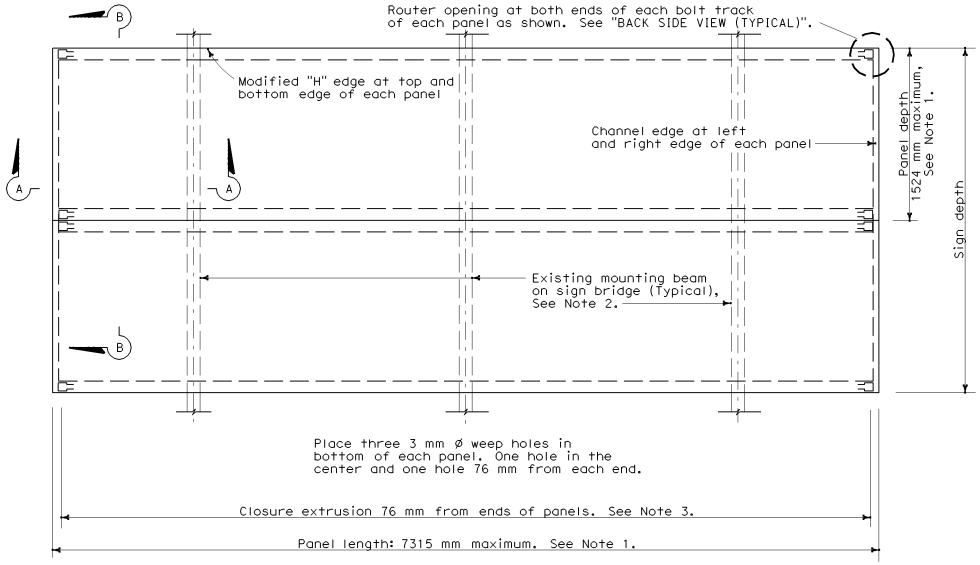

FACE VIEW OF LAMINATED PANEL

Two panels shown

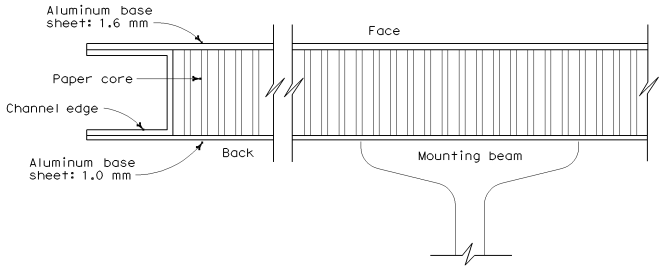

SECTION A-A

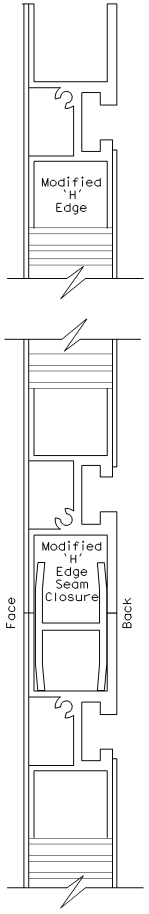

SECTION B-B

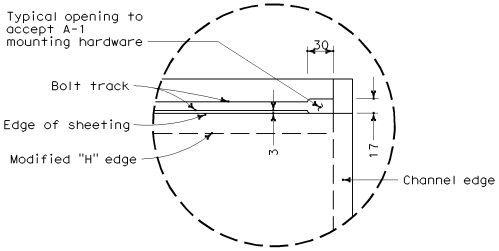

BACK SIDE VIEW (TYPICAL)

NO SCALE

NOTES

1. Panel length shall be 1219 mm to 7315 mm in graduated increments of 305 mm. Panel depth shall be 508 mm to 1524 mm, graduated in increments of 254 mm.
2. Unless otherwise shown on the plans, refer to applicable Standard Plan for location of sign bridge supports and mounting details.
3. For multiple panel signs, see Standard Plan S85 for seam closure extrusion quantities.
4. See Standard Plan S86 for extrusion details.
5. See Standard Plan S87 for A-1 and Standard Plan S88 for A-2 mounting hardware.
6. Extrusions shall be joined as specified in the Special Provisions.
7. All horizontal extrusions shall be continuous.

STATE OF CALIFORNIA
DEPARTMENT OF TRANSPORTATION

OVERHEAD LAMINATED SIGN SINGLE OR MULTIPLE PANEL TYPE A (25.4 mm THICK)

NO SCALE

ALL DIMENSIONS ARE IN MILLIMETERS UNLESS OTHERWISE SHOWN

S81

07-21-04

Back to Table of Contents

DIST	COUNTY	ROUTE	KILOMETER POST TOTAL PROJECT	SHEET NO.	TOTAL SHEETS

REGISTERED CIVIL ENGINEER

July 1, 2004
PLANS APPROVAL DATE

REGISTERED PROFESSIONAL ENGINEER Tiliat Sattar No. C42892 Exp. 03-31-2006 CIVIL STATE OF CALIFORNIA

The State of California or its officers or agents shall not be responsible for the accuracy or completeness of electronic copies of this plan sheet.

To get to the Caltrans web site, go to: http://www.dot.ca.gov

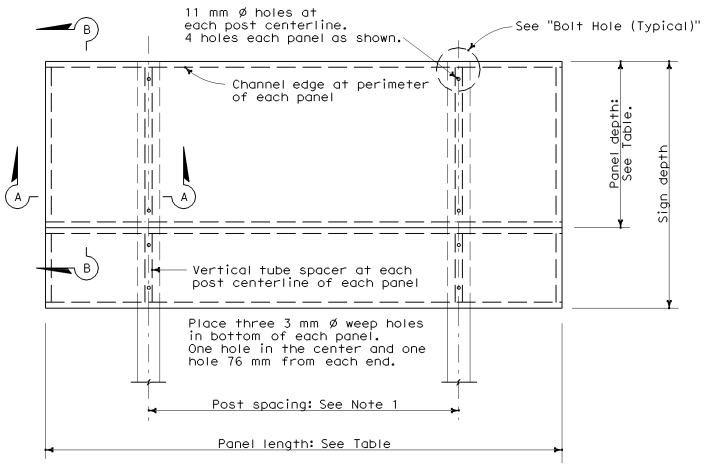

FACE VIEW OF LAMINATED PANEL

Two panels shown

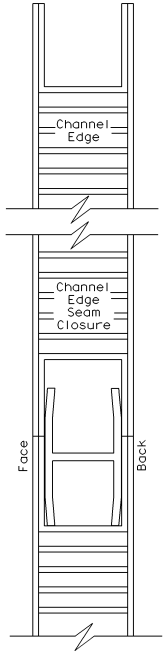

SECTION B-B

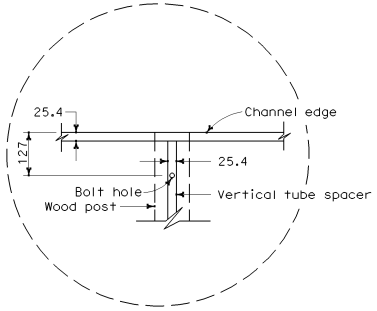

BOLT HOLE (TYPICAL)

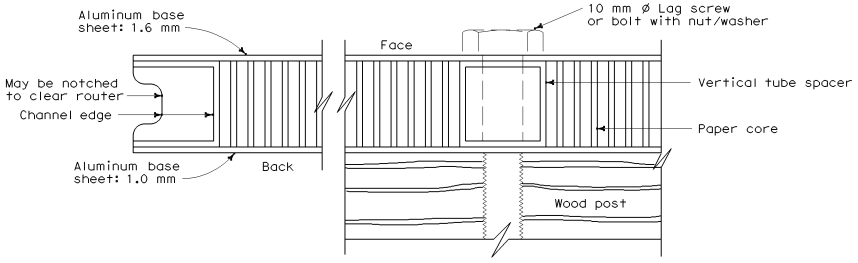

SECTION A-A

TABLE

TYPE B PANEL 25.4 mm Thick	
Depth (mm)	Length (mm)
1524	1372 to 4572
1372	1372 to 4572
1219	1372 to 4572
1067	1372 to 4572
914	1372 to 4572
762	1372 to 4572
610	1372 to 4572
457	1372 to 4572

See Note 4

NOTES

1. See Standard Plan S85 for post spacing table.
2. See Standard Plan S86 for extrusion details.
3. All horizontal extrusions shall be continuous.
4. Depth and length of panel shall be graduated in increments of 152 mm.
5. For multiple panel signs, see Standard Plan S85 for seam closure extrusion quantities.
6. Extrusions shall be joined as specified in the Special Provisions.

STATE OF CALIFORNIA
DEPARTMENT OF TRANSPORTATION

ROADSIDE LAMINATED SIGN SINGLE OR MULTIPLE PANEL TYPE B (25.4 mm THICK)

NO SCALE

ALL DIMENSIONS ARE IN MILLIMETERS UNLESS OTHERWISE SHOWN

S82

07-21-04

Back to Table of Contents

Caltrans Metric

DIST	COUNTY	ROUTE	KILOMETER POST TOTAL PROJECT	SHEET NO.	TOTAL SHEETS

REGISTERED CIVIL ENGINEER

July 1, 2004
PLANS APPROVAL DATE

REGISTERED PROFESSIONAL ENGINEER Tillat Sattar No. C42892 Exp. 03-31-2006 CIVIL STATE OF CALIFORNIA

The State of California or its officers or agents shall not be responsible for the accuracy or completeness of electronic copies of this plan sheet.

To get to the Caltrans web site, go to: http://www.dot.ca.gov

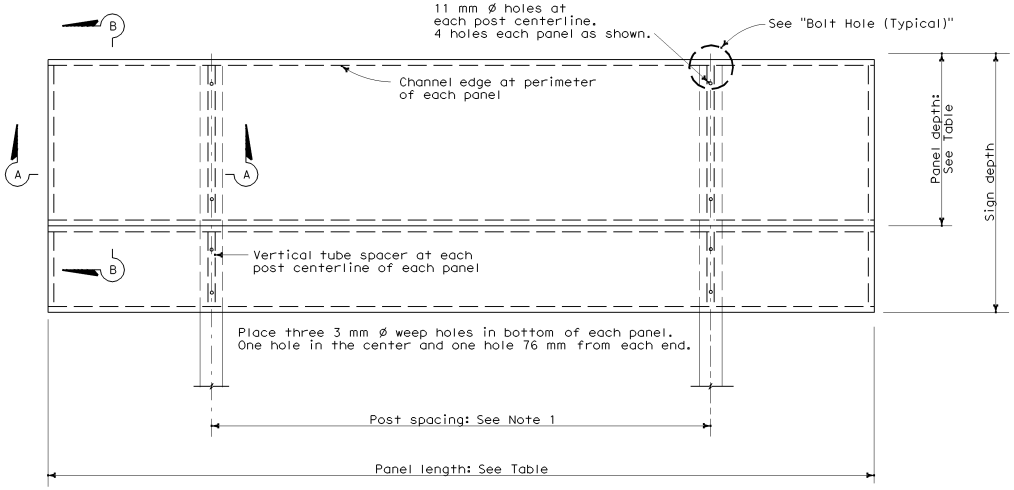

FACE VIEW OF LAMINATED PANEL

Two panels shown

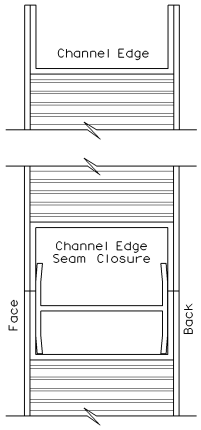

SECTION B-B

TABLE

TYPE B PANEL 63.5 mm Thick	
Depth (mm)	Length (mm)
1524	4724 to 5029
1372	4724 to 5639
1219	4724 to 6248
1067	4724 to 7163
914	4724 to 7315
762	4724 to 7315
610	4724 to 7315
457	4724 to 7315

See Note 4

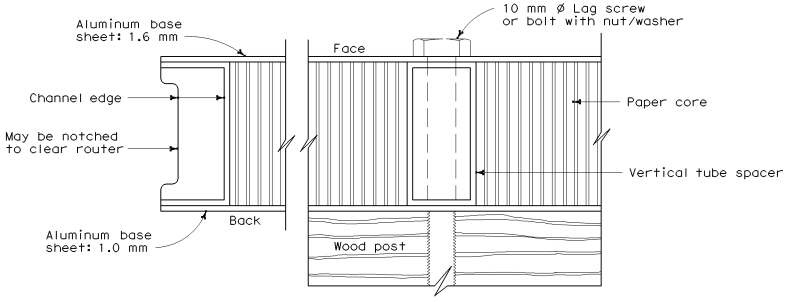

SECTION A-A

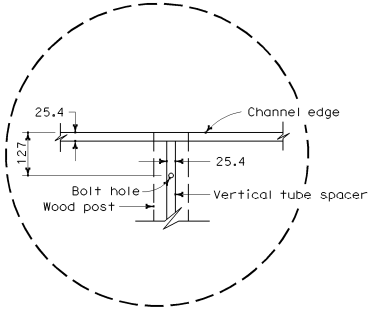

BOLT HOLE (TYPICAL)

NOTES

1. See Standard Plan S85 for post spacing table.
2. See Standard Plan S86 for extrusion details.
3. All horizontal extrusions shall be continuous.
4. Depth and length of panel shall be graduated in increments of 152 mm.
5. For multiple panel signs, see Standard Plan S85 for seam closure extrusion quantities.
6. Extrusions shall be joined as specified in the Special Provisions.

STATE OF CALIFORNIA
DEPARTMENT OF TRANSPORTATION

ROADSIDE LAMINATED SIGN SINGLE OR MULTIPLE PANEL TYPE B (63.5 mm THICK)

NO SCALE

ALL DIMENSIONS ARE IN MILLIMETERS UNLESS OTHERWISE SHOWN

S83

07-21-04

Back to Table of Contents

Caltrans Metric

DIST	COUNTY	ROUTE	KILOMETER POST TOTAL PROJECT	SHEET NO.	TOTAL SHEETS

REGISTERED ~~CIVIL~~ ENGINEER

July 1, 2004
PLANS APPROVAL DATE

REGISTERED PROFESSIONAL ENGINEER Tiliat Sattar No. C42892 Exp. 03-31-2006 CIVIL STATE OF CALIFORNIA

The State of California or its officers or agents shall not be responsible for the accuracy or completeness of electronic copies of this plan sheet.

To get to the Caltrans web site, go to: http://www.dot.ca.gov

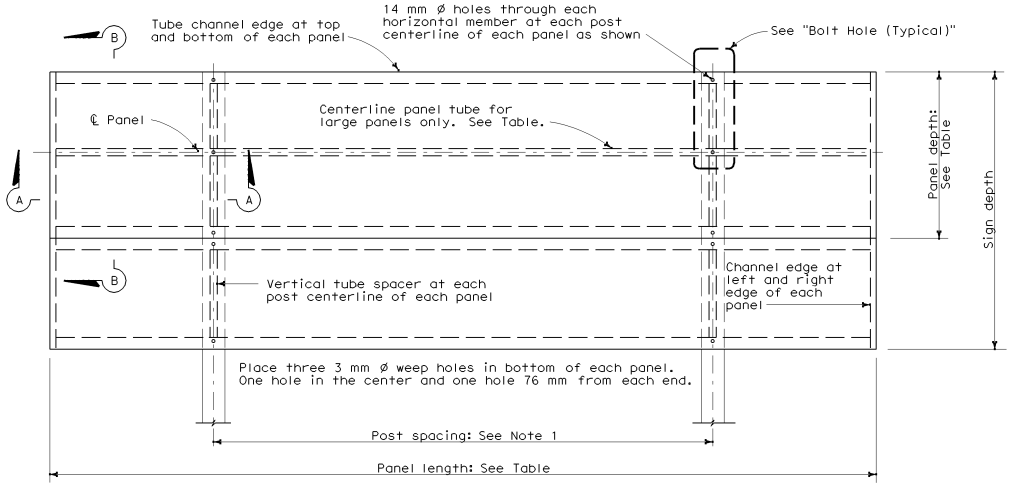

FACE VIEW OF LAMINATED PANEL

Two panels shown

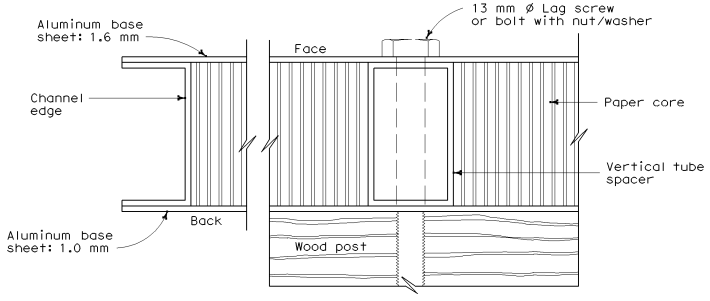

SECTION A-A

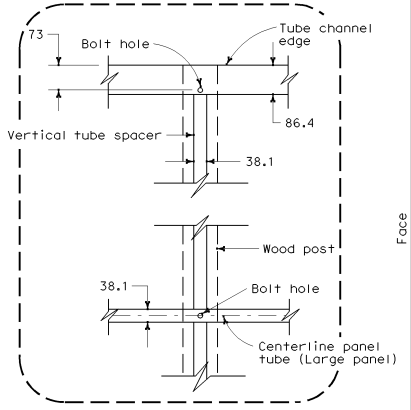

BOLT HOLE (TYPICAL)

Large panel shown

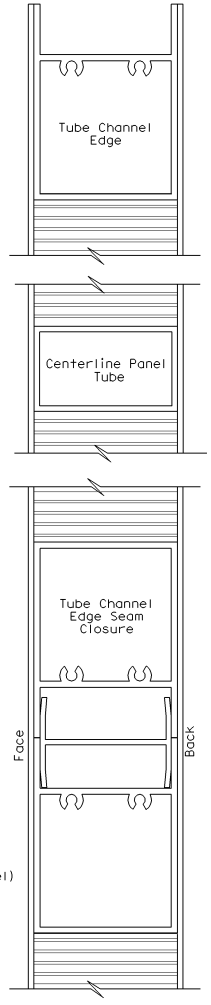

SECTION B-B

TABLE A

Panel Depth (mm)	Panel Length (mm)
1524	5182 to 7315
1372	5791 to 7315
1219	6401 to 7315
1067	7315

See Notes 4 and 7.

NOTES

1. See Standard Plan S85 for post spacing table.
2. See Standard Plan S86 for extrusion details.
3. All horizontal extrusions shall be continuous.
4. Depth and length of panel shall be graduated in increments of 152 mm.
5. For multiple panel signs, see Standard Plan S85 for seam closure extrusion quantities.
6. Extrusions shall be joined as specified in the Special Provisions.
7. Panels with the dimensions shown in Table A are designated as large panels.

STATE OF CALIFORNIA
DEPARTMENT OF TRANSPORTATION

ROADSIDE LAMINATED SIGN SINGLE OR MULTIPLE PANEL TYPE H (63.5 mm THICK)

NO SCALE

ALL DIMENSIONS ARE IN MILLIMETERS UNLESS OTHERWISE SHOWN

S84

07-23-04

Back to Table of Contents

Caltrans Metric

DIST	COUNTY	ROUTE	KILOMETER POST TOTAL PROJECT	SHEET NO.	TOTAL SHEETS

REGISTERED ~~CIVIL~~ ENGINEER

July 1, 2004
PLANS APPROVAL DATE

REGISTERED PROFESSIONAL ENGINEER Tillat Sattar No. C42892 Exp. 03-31-2006 CIVIL STATE OF CALIFORNIA

The State of California or its officers or agents shall not be responsible for the accuracy or completeness of electronic copies of this plan sheet.

To get to the Caltrans web site, go to: http://www.dot.ca.gov

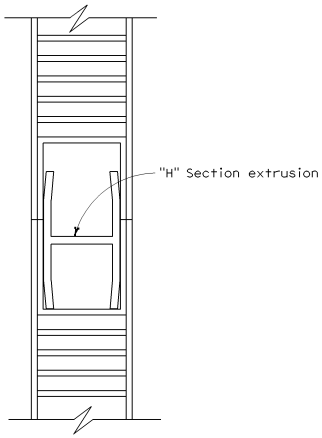

TYPICAL SEAM CLOSURE DETAIL

Panel Length	Closure Length	Pieces & Length Required
1067 mm	914 mm	1-914 mm
1219 mm	1067 mm	1-1067 mm
1372 mm	1219 mm	1-1219 mm
1524 mm	1372 mm	1-1372 mm
1676 mm	1524 mm	1-1524 mm
1829 mm	1676 mm	1-1676 mm
1981 mm	1829 mm	2-914 mm
2134 mm	1981 mm	1-914 mm, 1-1067 mm
2286 mm	2134 mm	2-1067 mm
2438 mm	2286 mm	1-1067 mm, 1-1219 mm
2591 mm	2438 mm	2-1219 mm
2743 mm	2591 mm	1-1219 mm, 1-1372 mm
2896 mm	2743 mm	2-1372 mm
3048 mm	2896 mm	1-1372 mm, 1-1524 mm
3200 mm	3048 mm	2-1524 mm
3353 mm	3200 mm	1-1524 mm, 1-1676 mm
3505 mm	3353 mm	2-1676 mm
3658 mm	3505 mm	2-1219 mm, 1-1076 mm
3810 mm	3658 mm	3-1219 mm
3962 mm	3810 mm	2-1219 mm, 1-1372 mm
4115 mm	3962 mm	2-1372 mm, 1-1219 mm
4267 mm	4115 mm	3-1372 mm
4420 mm	4267 mm	2-1372 mm, 1-524 mm
4572 mm	4420 mm	2-1524 mm, 1-1372 mm
4724 mm	4572 mm	3-1524 mm
4877 mm	4724 mm	2-1676 mm, 1-1372 mm
5029 mm	4877 mm	2-1676 mm, 1-1524 mm
5182 mm	5029 mm	3-1676 mm
5334 mm	5182 mm	3-1219 mm, 1-1524 mm
5486 mm	5334 mm	3-1372 mm, 1-1219 mm
5693 mm	5486 mm	4-1372 mm
5791 mm	5693 mm	3-1372 mm, 1-1524 mm
5944 mm	5791 mm	3-1524 mm, 1-1219 mm
6096 mm	5944 mm	3-1524 mm, 1-1372 mm
6248 mm	6096 mm	4-1524 mm
6401 mm	6248 mm	3-1676 mm, 1-1219 mm
6553 mm	6401 mm	3-1676 mm, 1-1219 mm
6706 mm	6553 mm	3-1676 mm, 1-1524 mm
6858 mm	6706 mm	4-1676 mm
7010 mm	6858 mm	5-1372 mm
7163 mm	7010 mm	4-1372 mm, 1-1542 mm
7315 mm	7163 mm	3-1372 mm, 2-1524 mm

"H" Sections will be set in 76 mm from edge of panels to allow for rivet clearance in borders. Standard length in stock: 914 mm, 1067 mm, 1219 mm, 1372 mm, 1524 mm and 1676 mm.

SEAM CLOSURE
"H" SECTION EXTRUSION

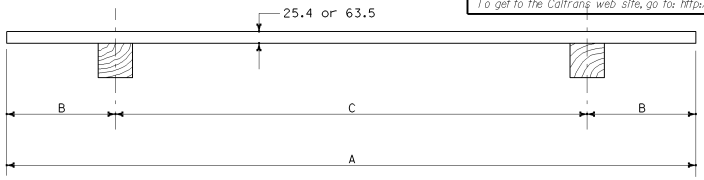

PLAN VIEW

25.4 mm PANEL

Length of Sign A	Number of Posts	Overhang B	Post Spacing C
1372 mm	2	152 mm	1067 mm
1524 mm	2	229 mm	1067 mm
1676 mm	2	305 mm	1067 mm
1829 mm	2	305 mm	1219 mm
1981 mm	2	381 mm	1219 mm
2134 mm	2	381 mm	1372 mm
2286 mm	2	457 mm	1372 mm
2438 mm	2	457 mm	1524 mm
2591 mm	2	508 mm	1575 mm
2743 mm	2	559 mm	1626 mm
2896 mm	2	584 mm	1727 mm
3048 mm	2	610 mm	1829 mm
3200 mm	2	610 mm	1981 mm
3353 mm	2	610 mm	2134 mm
3503 mm	2	686 mm	2134 mm
3658 mm	2	762 mm	2134 mm
3810 mm	2	762 mm	2286 mm
3962 mm	2	762 mm	2438 mm
4115 mm	2	762 mm	2591 mm
4267 mm	2	762 mm	2743 mm
4420 mm	2	914 mm	2591 mm
4572 mm	2	914 mm	2743 mm

63.5 mm PANEL

Length of Sign A	Number of Posts	Overhang B	Post Spacing C
4724 mm	2	914 mm	2896 mm
4877 mm	2	991 mm	2896 mm
5029 mm	2	991 mm	3048 mm
5182 mm	2	991 mm	3200 mm
5334 mm	2	1067 mm	3200 mm
5486 mm	2	1067 mm	3353 mm
5639 mm	2	1143 mm	3353 mm
5791 mm	2	1143 mm	3505 mm
5944 mm	2	1143 mm	3658 mm
6096 mm	2	1229 mm	3658 mm
6248 mm	2	1229 mm	3810 mm
6401 mm	2	1295 mm	3810 mm
6553 mm	2	1295 mm	3962 mm
6706 mm	2	1295 mm	4115 mm
6858 mm	2	1372 mm	4115 mm
7010 mm	2	1372 mm	4267 mm
7163 mm	2	1372 mm	4420 mm
7315 mm	2	1448 mm	4420 mm

STANDARD POST SPACING

STATE OF CALIFORNIA
DEPARTMENT OF TRANSPORTATION

SEAM CLOSURE, "H" SECTION EXTRUSION AND POST SPACING TABLES MULTI-HORIZONTAL LAMINATED PANEL ALUMINUM SIGNS

NO SCALE

ALL DIMENSIONS ARE IN MILLIMETERS UNLESS OTHERWISE SHOWN

S85

07-21-04

Back to Table of Contents

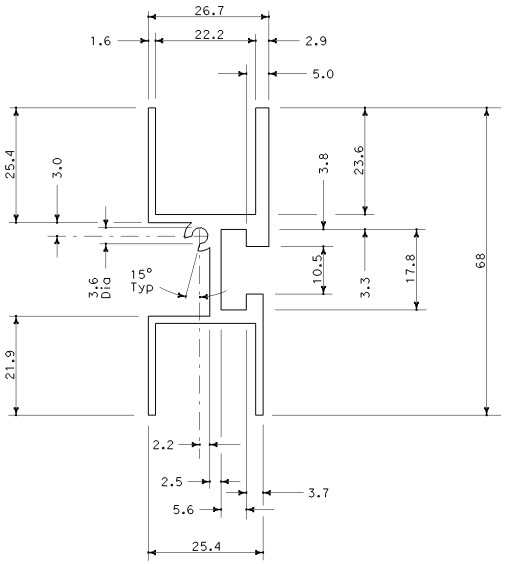

DETAIL No. 1

Unless noted, wall thickness is 1.6 mm.

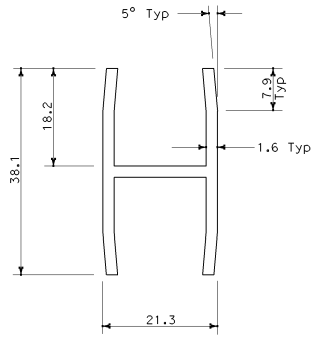

DETAIL No. 2

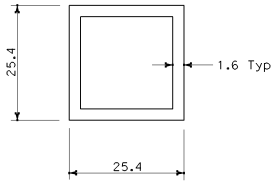

DETAIL No. 3

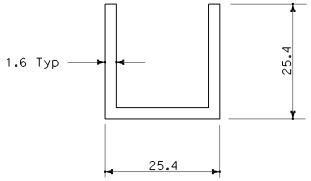

DETAIL No. 4

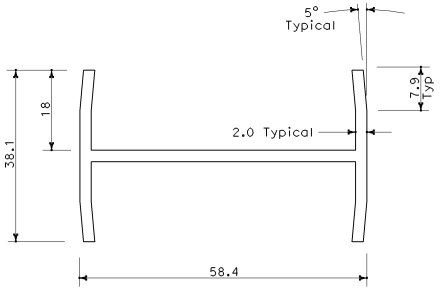

DETAIL No. 5

TABLE

Extrusion Type	25.4 mm Thick Panel		63.5 mm Thick Panel	
	Type A Panel	Type B Panel	Type B Panel	Type H Panel
Channel Edge	Detail No. 4	Detail No. 4	Detail No. 9	Detail No. 9
Tube-Channel Edge	N/A	N/A	N/A	Detail No. 6
Modified "H" Edge	Detail No. 1	N/A	N/A	N/A
Vertical Tube Spacer	N/A	Detail No. 3	Detail No. 8	Detail No. 8
Vertical Tube Spacer (Large panel)	N/A	N/A	N/A	Detail No. 7
CL Panel Tube (Large panel)	N/A	N/A	N/A	Detail No. 7
Seam Closure "H" Section	Detail No. 2	Detail No. 2	Detail No. 5	Detail No. 5

Note: All extrusions shall be aluminum alloy 6063-T6.

CL = Centerline

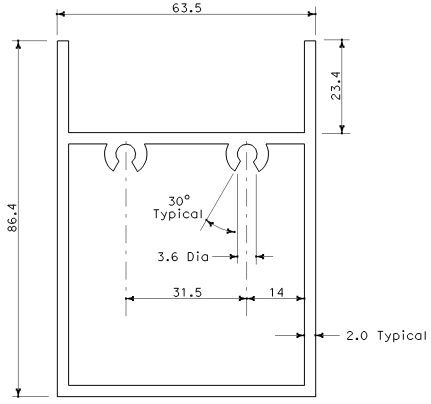

DETAIL No. 6

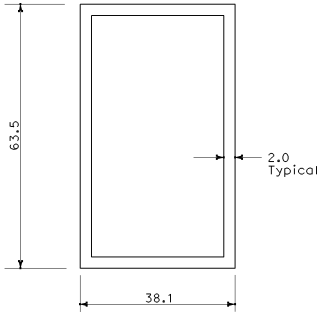

DETAIL No. 7

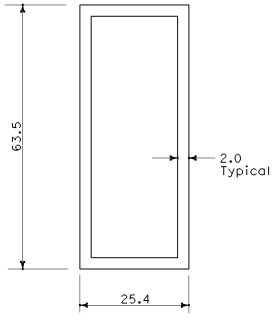

DETAIL No. 8

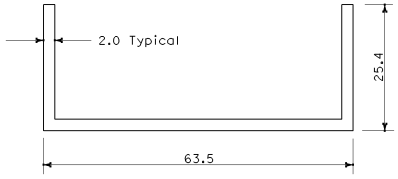

DETAIL No. 9

Caltrans Metric

DIST	COUNTY	ROUTE	KILOMETER POST TOTAL PROJECT	SHEET NO.	TOTAL SHEETS

REGISTERED CIVIL ENGINEER

July 1, 2004
PLANS APPROVAL DATE

REGISTERED PROFESSIONAL ENGINEER Tiliat Sattar No. C42892 Exp. 03-31-2006 CIVIL STATE OF CALIFORNIA

The State of California or its officers or agents shall not be responsible for the accuracy or completeness of electronic copies of this plan sheet.

To get to the Caltrans web site, go to: http://www.dot.ca.gov

STATE OF CALIFORNIA
DEPARTMENT OF TRANSPORTATION

LAMINATED PANEL DETAILS EXTRUSIONS FOR TYPE A, B AND H PANELS

NO SCALE

ALL DIMENSIONS ARE IN MILLIMETERS UNLESS OTHERWISE SHOWN

S86

07-21-04

Back to Table of Contents

DIST	COUNTY	ROUTE	KILOMETER POST TOTAL PROJECT	SHEET NO.	TOTAL SHEETS

REGISTERED CIVIL ENGINEER

July 1, 2004
PLANS APPROVAL DATE

REGISTERED PROFESSIONAL ENGINEER
Tiliat Sattar
No. C42892
Exp. 03-31-2006
CIVIL
STATE OF CALIFORNIA

The State of California or its officers or agents shall not be responsible for the accuracy or completeness of electronic copies of this plan sheet.

To get to the Caltrans web site, go to: http://www.dot.ca.gov

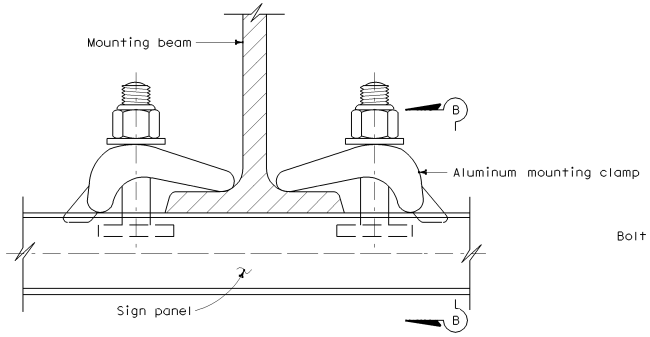

TYPICAL ALUMINUM CLAMP MOUNTING

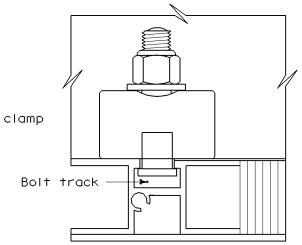

SECTION B-B
TYPICAL BOLTED CONNECTION TO STRUCTURE SUPPORT

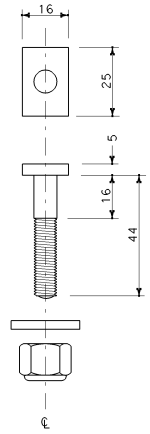

STAINLESS STEEL BOLT

A-1 HARDWARE QUANTITY TABLE

SIGN LENGTH mm	SIGN DEPTH mm - See Note 6	UNITS REQUIRED See Note 5
4572 or less	1270 - 1524	4
4877 - 7315	1270 - 1524	6
4572 or less	1778 - 3048	8
4877 - 7315	1778 - 3048	12

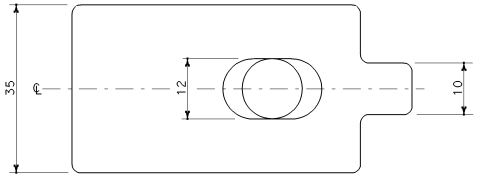

TOP VIEW

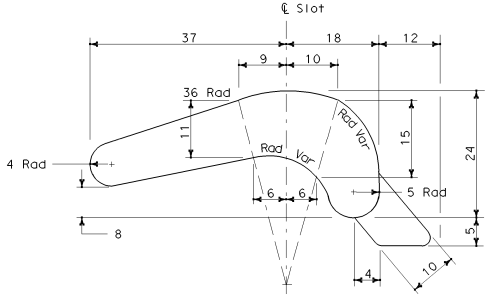

SIDE VIEW

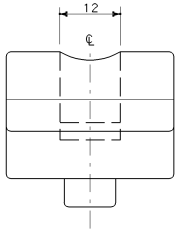

FRONT VIEW

NOTES

1. Refer to applicable Standard Plan for additional mounting details.
2. Mounting clamp shall be aluminum casting as specified in the Special Provisions.
3. Rectangular head bolt, hexagon stop nut, and flat washer shall be 10 mm diameter (18-8) stainless steel.
4. Mounting torque shall be 19.8 N-m maximum.
5. One unit of A-1 hardware shall consist of two sets of these components: clamp, bolt, nut and washer.
6. Signs 2794 mm and 3048 mm in depth may be fabricated in three panel sections to avoid legend from being placed on a horizontal seam. Increase number of units of mounting hardware accordingly.

STATE OF CALIFORNIA
DEPARTMENT OF TRANSPORTATION

TYPE A-1 MOUNTING HARDWARE OVERHEAD LAMINATED TYPE A PANEL TRUSS AND LIGHTWEIGHT SIGN STRUCTURES

NO SCALE

ALL DIMENSIONS ARE IN MILLIMETERS UNLESS OTHERWISE SHOWN

S87

07-21-04

Back to Table of Contents

DIST	COUNTY	ROUTE	KILOMETER POST TOTAL PROJECT	SHEET NO.	TOTAL SHEETS

REGISTERED CIVIL ENGINEER

July 1, 2004
PLANS APPROVAL DATE

REGISTERED PROFESSIONAL ENGINEER
Tiliat Sattar
No. C42892
Exp. 03-31-2006
CIVIL
STATE OF CALIFORNIA

The State of California or its officers or agents shall not be responsible for the accuracy or completeness of electronic copies of this plan sheet.

To get to the Caltrans web site, go to: http://www.dot.ca.gov

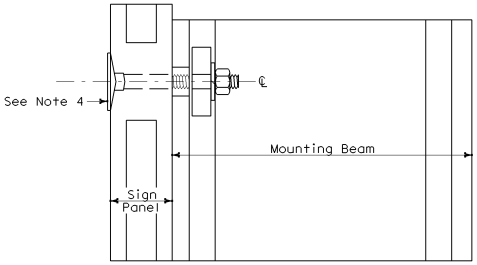

SIDE VIEW

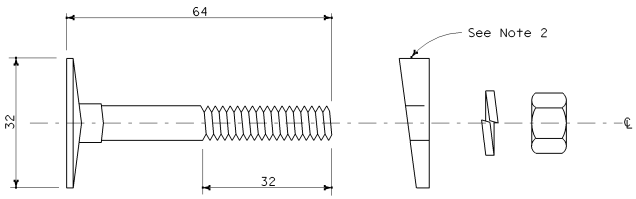

MOUNTING HARDWARE

A-2 HARDWARE QUANTITY TABLE

SIGN LENGTH mm	SIGN DEPTH mm - See Note 3	UNITS REQUIRED See Note 5
4267 or less	1270 - 1524	9
4572 - 7315	1270 - 1524	13
6096 - 7315	1270 - 1524	13
4267 or less	1778 - 3048	17
4572 - 7315	1778 - 3048	25
6096 - 7315	1778 - 3048	26

NOTES

1. Refer to applicable Standard Plan for additional mounting details.
2. Beveled washer for flange mounting only.
3. Elevator head bolt, hexagon nut, and lock washer shall be 8 mm diameter (18-8) cadmium plated steel.
4. Furnish retroflective stick-ons for bolt head in same color as sign. Retroreflective stick-ons are applied at time of installation.
5. One unit of A-2 hardware shall consist of one each; bolt nut, washer and beveled washer.
6. Signs 2794 mm and 3048 mm in depth may be fabricated in three panel sections to avoid legend from being placed on a horizontal seam. Increase number of units of mounting hardware accordingly.

STATE OF CALIFORNIA
DEPARTMENT OF TRANSPORTATION

TYPE A-2 MOUNTING HARDWARE OVERHEAD LAMINATED TYPE A PANEL BOX BEAM CLOSED TRUSS, BRIDGE MOUNTED AND TUBULAR SIGN STRUCTURES

NO SCALE

ALL DIMENSIONS ARE IN MILLIMETERS UNLESS OTHERWISE SHOWN

S88

2004 Std PLAN S88

06-22-04

Back to Table of Contents

DIST	COUNTY	ROUTE	KILOMETER POST TOTAL PROJECT	SHEET NO.	TOTAL SHEETS

REGISTERED ~~CIVIL~~ ENGINEER

July 1, 2004
PLANS APPROVAL DATE

REGISTERED PROFESSIONAL ENGINEER
Tiilat Sattar
No. C42892
Exp. 03-31-2006
CIVIL
STATE OF CALIFORNIA

The State of California or its officers or agents shall not be responsible for the accuracy or completeness of electronic copies of this plan sheet.

To get to the Caltrans web site, go to: http://www.dot.ca.gov

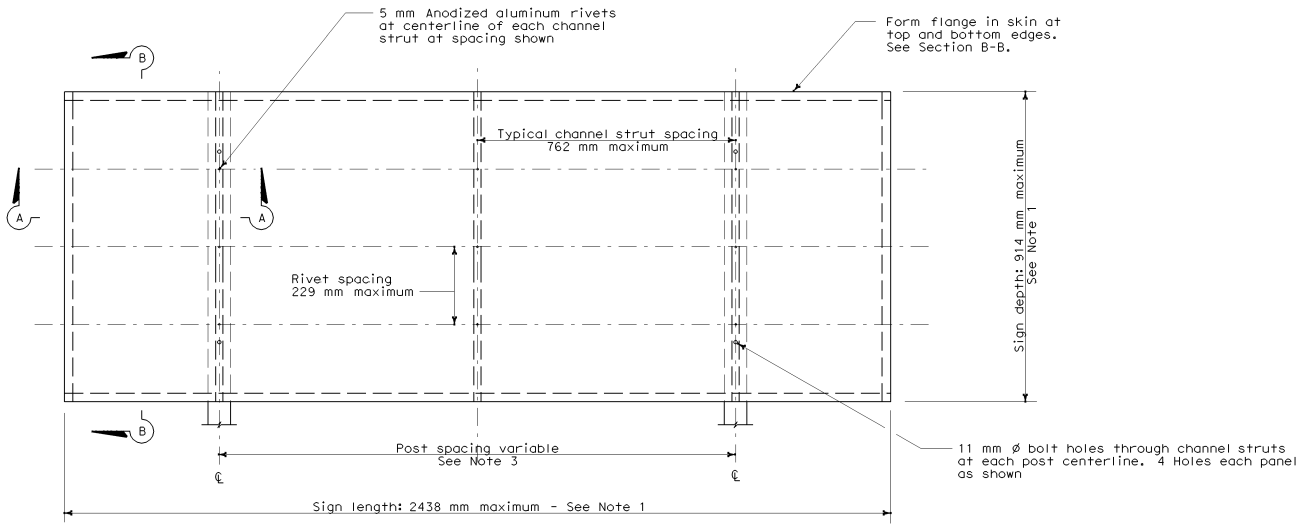

FACE VIEW OF FORMED PANEL

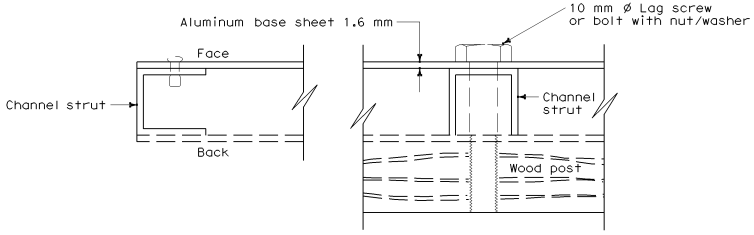

SECTION A-A

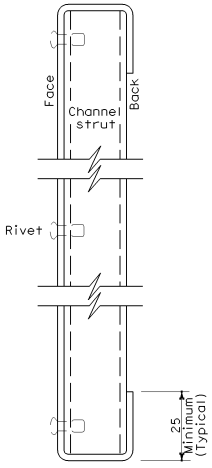

SECTION B-B

NOTES

1. Sign size to be graduated in 152 mm increments, both vertically and horizontally. Area of sign not to exceed 1.86 m^2.
2. Channel strut extrusions shall be 25.4 mm x 25.4 mm x 1.6 mm aluminum alloy 6063-T6.
3. See Standard Plan RS2 for post spacing and mounting details.

STATE OF CALIFORNIA
DEPARTMENT OF TRANSPORTATION

ROADSIDE FORMED SINGLE SHEET ALUMINUM PANEL

NO SCALE

ALL DIMENSIONS ARE IN MILLIMETERS UNLESS OTHERWISE SHOWN

S89

2004 Std PLAN S89

07-27-04

Back to Table of Contents

DIST	COUNTY	ROUTE	KILOMETER POST TOTAL PROJECT	SHEET NO.	TOTAL SHEETS

Caltrans Metric

REGISTERED ~~CIVIL~~ ENGINEER

July 1, 2004
PLANS APPROVAL DATE

REGISTERED PROFESSIONAL ENGINEER
Tiliat Sattar
No. C42892
Exp. 03-31-2006
CIVIL
STATE OF CALIFORNIA

The State of California or its officers or agents shall not be responsible for the accuracy or completeness of electronic copies of this plan sheet.

To get to the Caltrans web site, go to: http://www.dot.ca.gov

PANEL DEPTH	DIMENSION "A"	DIMENSION "B"	DIMENSION "D"	TOTAL No. OF CHANNELS PER PANEL
1270 mm	603 mm	---	---	3
1524 mm	730 mm	---	---	3
1778 mm	476 mm	762 mm	---	4
2032 mm	476 mm	508 mm	---	5
2286 mm	476 mm	762 mm	508 mm	5
2540 mm	476 mm	762 mm	---	5
2794 mm	476 mm	508 mm	762 mm	6
3048 mm	476 mm	762 mm	508 mm	6

NOTES

"C" Indicates location of channel.
"BC" Indicated location of bolt and channel.

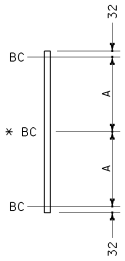

3 CHANNELS FOR 1270 mm AND 1524 mm DEPTH

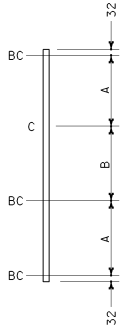

4 CHANNELS FOR 1778 mm DEPTH

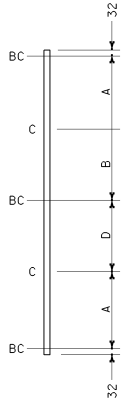

5 CHANNELS FOR 2286 mm DEPTH

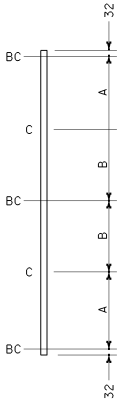

5 CHANNELS FOR 2032 mm AND 2540 mm DEPTH

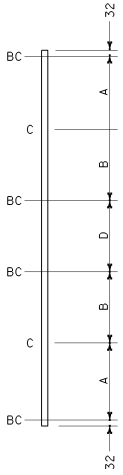

6 CHANNELS FOR 2794 mm AND 3048 mm DEPTH

* This bolt may be omitted when depth is 1270 mm.

STATE OF CALIFORNIA
DEPARTMENT OF TRANSPORTATION

CHANNEL AND BOLT HOLE LOCATION OVERHEAD FORMED SIGN PANEL

NO SCALE

ALL DIMENSIONS ARE IN MILLIMETERS UNLESS OTHERWISE SHOWN

S90

06-22-04

2004 Std PLAN S90

Back to Table of Contents

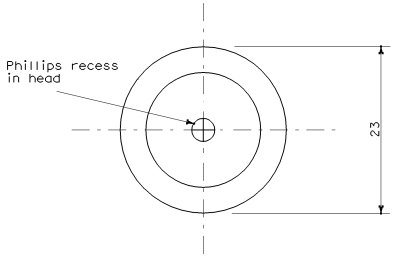

TRUSS HEAD BOLT

2024 Aluminum alloy per QQ-A-430
Anodize interstate green per MIL-A-8625

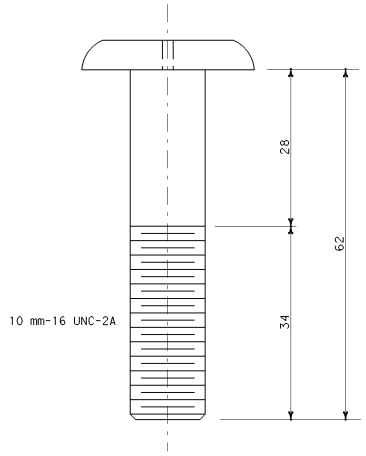

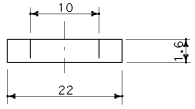

WASHER

Fiber/Nylon

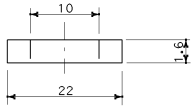

WASHER

2024 Aluminum alloy
Clear anodize per MIL-A-8625

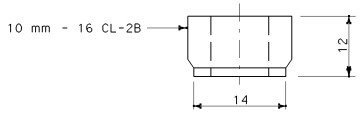

LOCKNUT WITH NYLON INSERT

2911-T3 Aluminum alloy or equivalent
Anodize per MIL-A-8625
Maximum torque - 6.8 N-m

MOUNTING HARDWARE QUANTITY CHART

SIGN LENGTH	SIGN DEPTH	NUMBER OF UNITS REQUIRED
2438 mm	1270 mm	8
3048 mm - 3657 mm	1270 mm	12
4267 mm - 4877 mm	1270 mm	16
5486 mm - 6096 mm	1270 mm	20
6706 mm - 7315 mm	1270 mm	24
7925 mm - 8534 mm	1270 mm	28
9144 mm - 9754 mm	1270 mm	32
10 363 mm - 10 973 mm	1270 mm	36
11 582 mm - 12 192 mm	1270 mm	40
12 802 mm - 13 411 mm	1270 mm	44
14 021 mm - 14 630 mm	1270 mm	48
2438 mm	1524 mm - 2540 mm	12
3048 mm - 3657 mm	1524 mm - 2540 mm	18
4267 mm - 4877 mm	1524 mm - 2540 mm	24
5486 mm - 6096 mm	1524 mm - 2540 mm	30
6706 mm - 7315 mm	1524 mm - 2540 mm	36
7925 mm - 8534 mm	1524 mm - 2540 mm	42
9144 mm - 9754 mm	1524 mm - 2540 mm	48
10 363 mm - 10 973 mm	1524 mm - 2540 mm	54
11 582 mm - 12 192 mm	1524 mm - 2540 mm	60
12 802 mm - 13 411 mm	1524 mm - 2540 mm	66
14 021 mm - 14 630 mm	1524 mm - 2540 mm	72
2438 mm	2794 mm - 3048 mm	16
3048 mm - 3657 mm	2794 mm - 3048 mm	24
4267 mm - 4877 mm	2794 mm - 3048 mm	32
5486 mm - 6096 mm	2794 mm - 3048 mm	40
6706 mm - 7315 mm	2794 mm - 3048 mm	48
7925 mm - 8534 mm	2794 mm - 3048 mm	56
9144 mm - 9754 mm	2794 mm - 3048 mm	64
10 363 mm - 10 973 mm	2794 mm - 3048 mm	72
11 582 mm - 12 192 mm	2794 mm - 3048 mm	80
12 802 mm - 13 411 mm	2794 mm - 3048 mm	88
14 021 mm - 14 630 mm	2794 mm - 3048 mm	96

Unit - 1 Truss head bolt, 1 Nylon insert locknut, 1 washer (Fiber/Nylon), 1 washer (Aluminum)

Caltrans Metric

DIST	COUNTY	ROUTE	KILOMETER POST TOTAL PROJECT	SHEET NO.	TOTAL SHEETS

REGISTERED ~~CIVIL~~ ENGINEER

July 1, 2004
PLANS APPROVAL DATE

REGISTERED PROFESSIONAL ENGINEER
Tiilat Sattar
No. C42892
Exp. 03-31-2006
CIVIL
STATE OF CALIFORNIA

The State of California or its officers or agents shall not be responsible for the accuracy or completeness of electronic copies of this plan sheet.

To get to the Caltrans web site, go to: http://www.dot.ca.gov

STATE OF CALIFORNIA
DEPARTMENT OF TRANSPORTATION

OVERHEAD FORMED SIGN PANEL TYPE A-3 MOUNTING HARDWARE

NO SCALE

ALL DIMENSIONS ARE IN MILLIMETERS UNLESS OTHERWISE SHOWN

S91

2004 Std PLAN S91

06-22-04

Back to Table of Contents

DIST	COUNTY	ROUTE	KILOMETER POST TOTAL PROJECT	SHEET NO.	TOTAL SHEETS

REGISTERED CIVIL ENGINEER

July 1, 2004
PLANS APPROVAL DATE

REGISTERED PROFESSIONAL ENGINEER Tiliat Sattar No. C42892 Exp. 03-31-2006 CIVIL STATE OF CALIFORNIA

The State of California or its officers or agents shall not be responsible for the accuracy or completeness of electronic copies of this plan sheet.

To get to the Caltrans web site, go to: http://www.dot.ca.gov

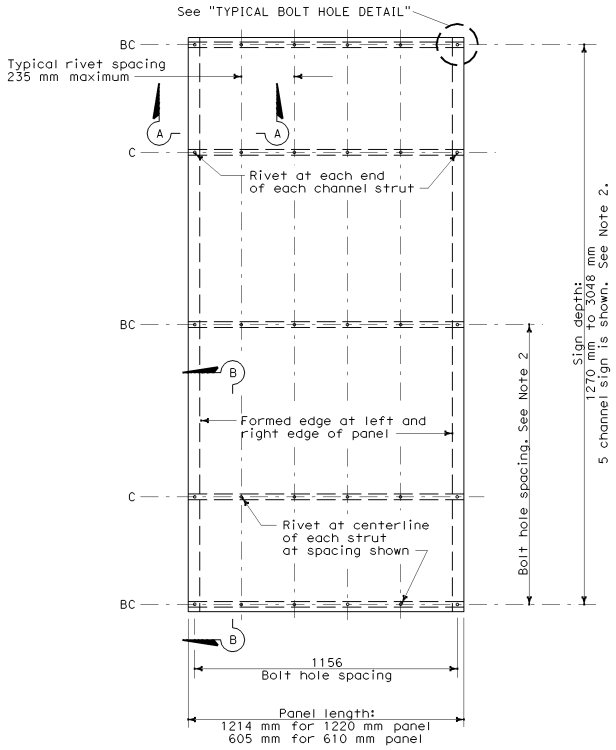

FACE VIEW OF FORMED PANEL

Single panel shown

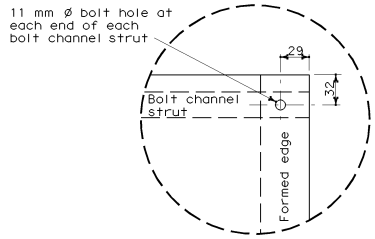

TYPICAL BOLT HOLE DETAIL

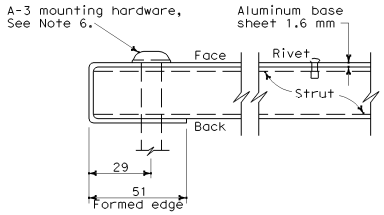

SECTION A-A

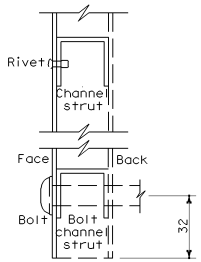

SECTION B-B

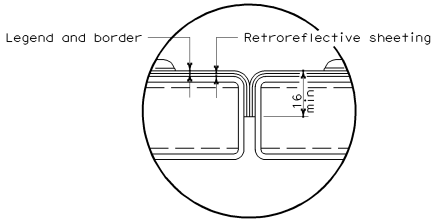

RETROREFLECTIVE SHEETING OVERLAP ON INTERIOR EDGES

Two panels shown

NOTES

1. "BC" indicates centerline of bolt channel strut. "C" indicates centerline of channel strut.
2. See Standard Plan S90 for location and configuration of struts.
3. Bolt channel and channel extrusions shall be 25.4 mm x 25.4 mm x 1.6 mm aluminum alloy 6063-T6.
4. All rivets shall be 5 mm in diameter and anodized aluminum.
5. See Standard Plan S8B for mounting details.
6. See Standard Plan S91 for A-3 mounting hardware.

STATE OF CALIFORNIA
DEPARTMENT OF TRANSPORTATION

OVERHEAD FORMED SIGN PANEL

NO SCALE

ALL DIMENSIONS ARE IN MILLIMETERS UNLESS OTHERWISE SHOWN

S92

07-21-04

Back to Table of Contents

CHANNEL SIZES

SIGN LENGTH (mm)	SIGN DEPTH (mm)	PANEL THICKNESS (mm)	No. OF HORIZONTAL MEMBERS	No. OF VERTICAL MEMBERS	HORZ. MEMBER TYPE	VERT. MEMBER TYPE
Up to 1194		1.6	No frame required			
1219 to 1397		2.0	No frame required			
1422 to 1778	305 to 610	1.6	2	--	A	--
	635 to 914	1.6	2	2	A	A
	940 to 1219	1.6	2	3	A	A
	1245 to 2438	1.6	3	3	B	A
1829 to 1981	305 to 610	1.6	2	--	A	--
	635 to 914	1.6	2	2	A	A
	940 to 1219	1.6	2	3	A	A
	1245 to 1829	1.6	3	3	B	B
	1854 to 2438	1.6	3	3	C	C
2032 to 2286	457 to 1219	2.0	2	3	B	B
	1245 to 1829	2.0	3	3	B	B
	1854 to 2438	2.0	3	3	C	C
2337 to 2591	457 to 1219	2.0	2	3	B	B
	1245 to 2438	2.0	3	3	C	C
2642 to 2896	457 to 1219	2.0	2	3	B	B
	1245 to 2438	2.0	3	3	C	C
2946 to 3353	457 to 1219	2.0	2	3	C	C
	1245 to 2438	2.0	3	3	C	C
	2464 to 3353	2.0	4	4	C	C

NOTE

Type A - 31.8 mm x 31.8 mm x 3.2 mm Channel to be aluminum alloy 6063-T5.
* Type B - 60.3 mm x 31.8 mm x 4.8 mm Channel to be aluminum alloy 6063-T6.
* Type C - 50.8 mm x 50.8 mm x 6.4 mm Channel to be aluminum alloy 6063-T6.

* 44.5 mm x 38.1 mm x 3.2 mm Rectangular tubing aluminum alloy 6063-T6 may be substituted for Types B and B, but more than one type of framing material used on one sign is unacceptable.

POST SPACING

SIGN LENGTH (mm)	CENTERLINE SPACING (mm)
1422 to 1727	1067
1778 to 2032	1219
2083 to 2337	1372
2388 to 2489	1524
2540 to 2642	1575
2692 to 2794	1626
2845 to 2946	1727
2997 to 3099	1829
3150 to 3302	1981
3327 to 3353	2134

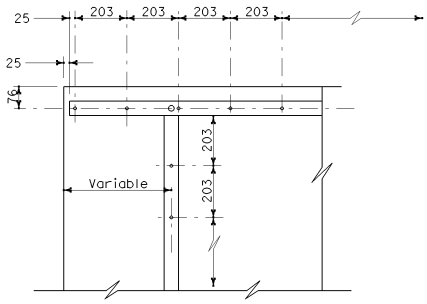

TYPICAL RIVET DETAIL

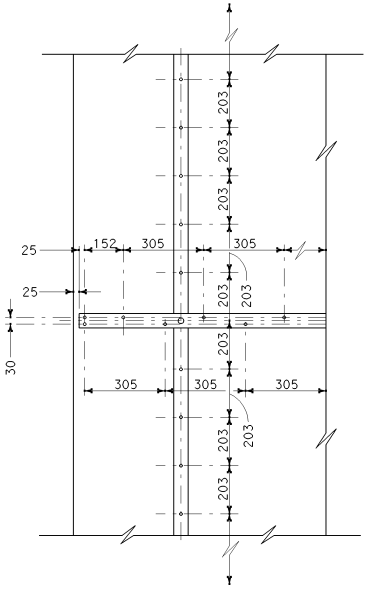

RIVET DETAIL AT SPLICE

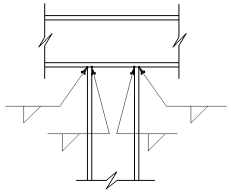

TOP VIEW

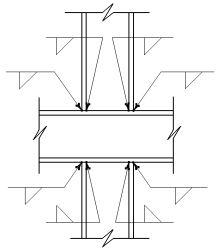

TOP VIEW

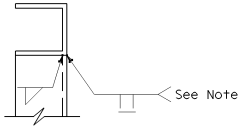

SIDE VIEW
WELD DETAIL No. 1

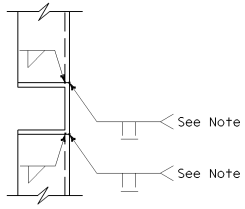

SIDE VIEW
WELD DETAIL No. 2

TYPICAL WELD DETAILS

For rectangular tubing, weld all around and grind beads flush where weld contacts sign panel.

Caltrans Metric

DIST	COUNTY	ROUTE	KILOMETER POST TOTAL PROJECT	SHEET NO.	TOTAL SHEETS

REGISTERED CIVIL ENGINEER

July 1, 2004
PLANS APPROVAL DATE

REGISTERED PROFESSIONAL ENGINEER Tillat Sattar No. C42892 Exp. 03-31-2006 CIVIL STATE OF CALIFORNIA

The State of California or its officers or agents shall not be responsible for the accuracy or completeness of electronic copies of this plan sheet.

To get to the Caltrans web site, go to: http://www.dot.ca.gov

STATE OF CALIFORNIA
DEPARTMENT OF TRANSPORTATION

FRAMING DETAILS FOR FRAMED SINGLE SHEET ALUMINUM SIGNS RECTANGULAR SHAPE

NO SCALE

ALL DIMENSIONS ARE IN MILLIMETERS UNLESS OTHERWISE SHOWN

S93

2004 Std PLAN S93

06-22-04

Back to Table of Contents

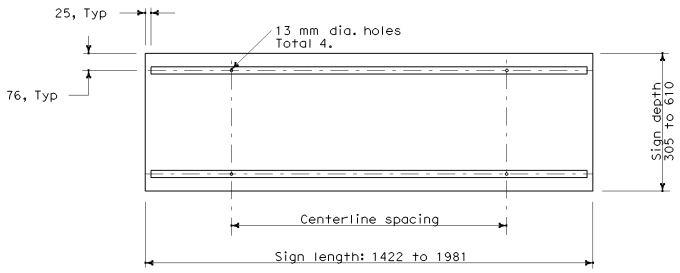

ROADSIDE SIGN No. 1

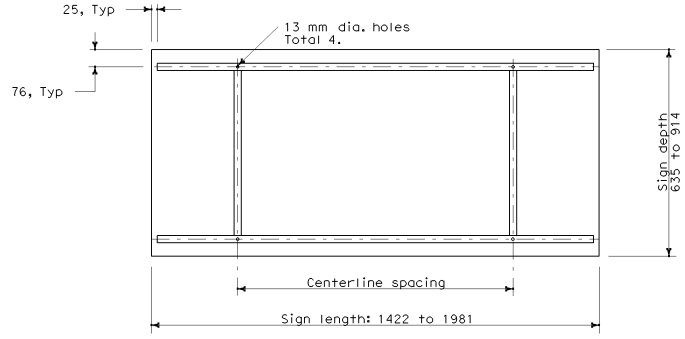

ROADSIDE SIGN No. 2

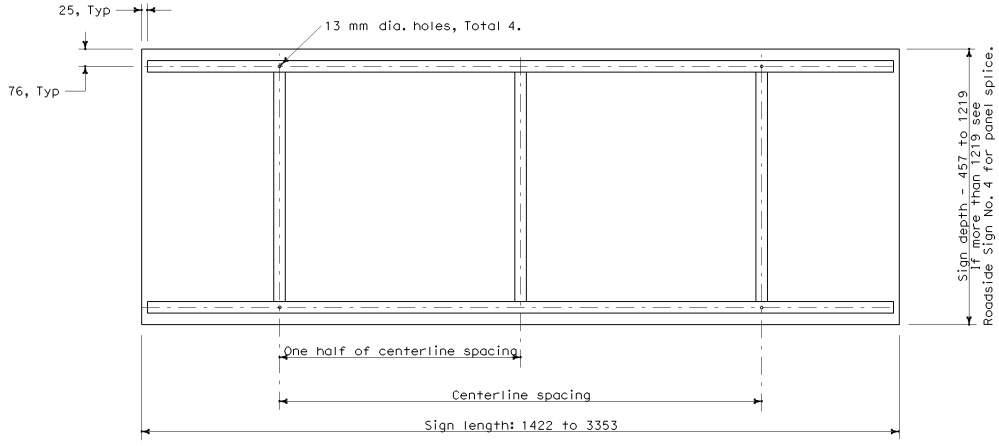

ROADSIDE SIGN No. 3

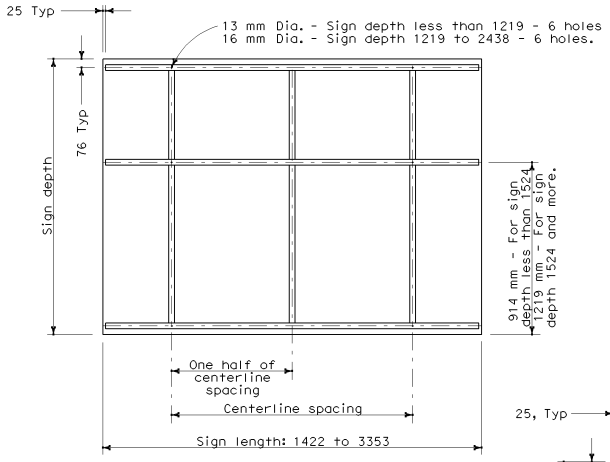

ROADSIDE SIGN No. 4

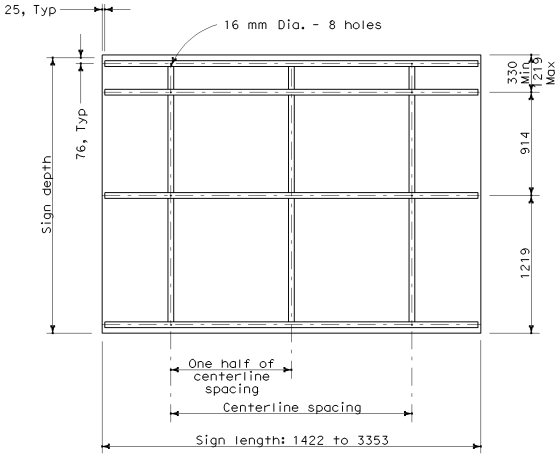

ROADSIDE SIGN No. 5

NOTES

1. See "FRAMING DETAILS FOR SINGLE SHEET ALUMINUM SIGNS RECTANGULAR SHAPE".
2. All members welded at joints as shown on Standard Plan S93.

DIST	COUNTY	ROUTE	KILOMETER POST TOTAL PROJECT	SHEET NO.	TOTAL SHEETS

REGISTERED CIVIL ENGINEER

July 1, 2004
PLANS APPROVAL DATE

REGISTERED PROFESSIONAL ENGINEER
Tiliat Sattar
No. C42892
Exp. 03-31-2006
CIVIL
STATE OF CALIFORNIA

The State of California or its officers or agents shall not be responsible for the accuracy or completeness of electronic copies of this plan sheet.

To get to the Caltrans web site, go to: http://www.dot.ca.gov

STATE OF CALIFORNIA
DEPARTMENT OF TRANSPORTATION

ROADSIDE SINGLE SHEET ALUMINUM SIGNS RECTANGULAR SHAPE

NO SCALE

ALL DIMENSIONS ARE IN MILLIMETERS UNLESS OTHERWISE SHOWN

S94

06-22-04

Back to Table of Contents

DIST	COUNTY	ROUTE	KILOMETER POST TOTAL PROJECT	SHEET NO.	TOTAL SHEETS

Caltrans Metric

REGISTERED CIVIL ENGINEER

July 1, 2004
PLANS APPROVAL DATE

REGISTERED PROFESSIONAL ENGINEER Tillat Sattar No. C42892 Exp. 03-31-2006 CIVIL STATE OF CALIFORNIA

The State of California or its officers or agents shall not be responsible for the accuracy or completeness of electronic copies of this plan sheet.

To get to the Caltrans web site, go to: http://www.dot.ca.gov

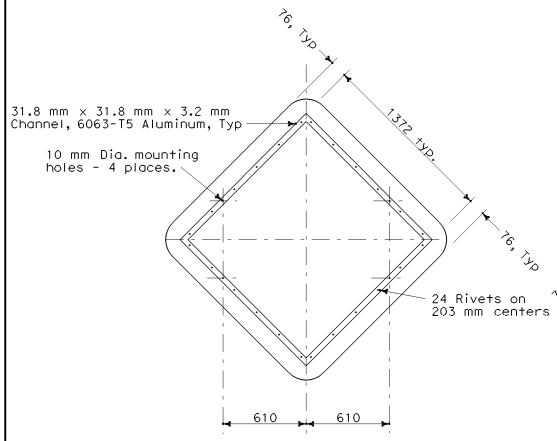

ROADSIDE SIGN No. 6

Framing detail for 1524 mm x 1524 mm diamond

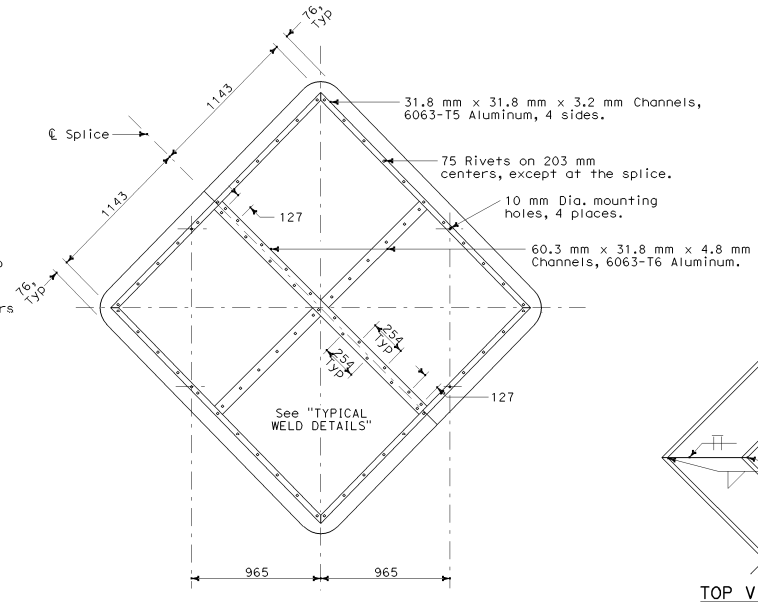

ROADSIDE SIGN No. 8

Framing detail for 2438 mm x 2438 mm diamond.
Made from 2 - 1219 mm x 2438 mm panels, spliced and braced by channels as shown.

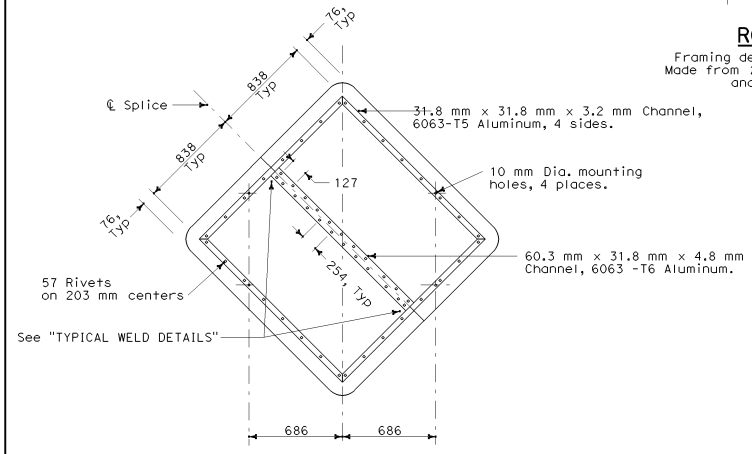

ROADSIDE SIGN No. 7

Framing detail for 1829 mm x 1829 mm diamond.
Made from 2 - 914 mm x 1829 mm panels, spliced and braced by channels as shown.

CHANNEL SIZES

Sign Size (mm)	Panel Thickness (mm)	Frame Type
1219 x 1219	1.6	No frame required
1219 x 1219	2.0	No frame required
1524 x 1524	2.0	See Roadside Sign No. 6
1829 x 1829	2.0	See Roadside Sign No. 7
2438 x 2438	2.0	See Roadside Sign No. 8

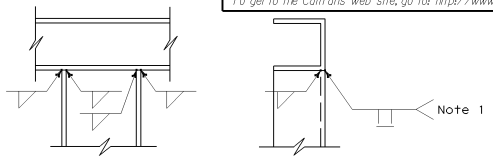

TOP VIEW SIDE VIEW

WELD DETAIL No. 3

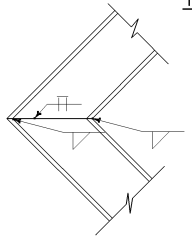

TOP VIEW

WELD DETAIL No. 4

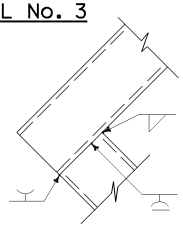

TOP VIEW

ALTERNATE WELD DETAIL No. 4A

Weld all around outside

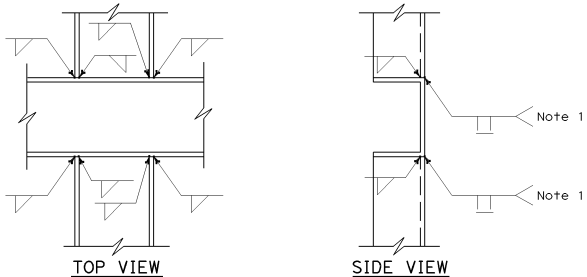

TOP VIEW SIDE VIEW

WELD DETAIL No. 5

TYPICAL WELD DETAILS

STATE OF CALIFORNIA
DEPARTMENT OF TRANSPORTATION

ROADSIDE SINGLE SHEET ALUMINUM SIGNS DIAMOND SHAPE

NO SCALE

ALL DIMENSIONS ARE IN MILLIMETERS UNLESS OTHERWISE SHOWN

S95

06-22-04

Back to Table of Contents

DIST	COUNTY	ROUTE	KILOMETER POST TOTAL PROJECT	SHEET NO.	TOTAL SHEETS

Caltrans Metric

REGISTERED ~~CIVIL~~ ENGINEER

July 1, 2004
PLANS APPROVAL DATE

REGISTERED PROFESSIONAL ENGINEER Tiliat Sattar No. C42892 Exp. 03-31-2006 CIVIL STATE OF CALIFORNIA

The State of California or its officers or agents shall not be responsible for the accuracy or completeness of electronic copies of this plan sheet.

To get to the Caltrans web site, go to: http://www.dot.ca.gov

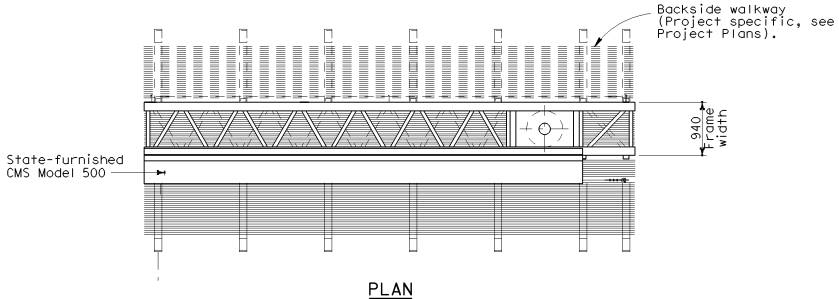

PLAN

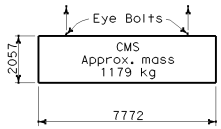

LIFTING DIAGRAM

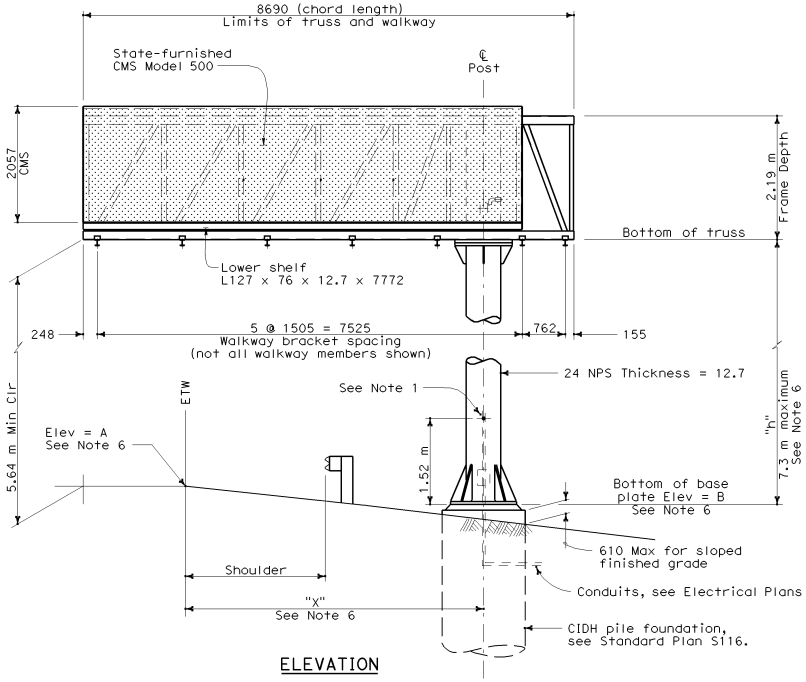

ELEVATION

NOTES

1. Drill and tap for Size 63 recessed pipe plug.
2. Changeable Message Sign will be State-furnished.
3. For location and elevation of sign structure see Project Plans.
4. Sign support post shall be raked out of plumb with leveling nuts to make the bottom of the sign frame level.
5. At final position of post top and bottom nuts shall be tightened against base plate.
6. See Project Plans.

STATE OF CALIFORNIA
DEPARTMENT OF TRANSPORTATION

OVERHEAD SIGN-TRUSS SINGLE POST TYPE LAYOUT UNBALANCED BUTTERFLY CHANGEABLE MESSAGE SIGNS MODEL 500

NO SCALE

ALL DIMENSIONS ARE IN MILLIMETERS UNLESS OTHERWISE SHOWN

S101

08-02-04

Back to Table of Contents

DIST	COUNTY	ROUTE	KILOMETER POST TOTAL PROJECT	SHEET NO.	TOTAL SHEETS

Caltrans Metric

REGISTERED CIVIL ENGINEER

July 1, 2004
PLANS APPROVAL DATE

REGISTERED PROFESSIONAL ENGINEER Tillat Sattar No. C42892 Exp. 03-31-2006 CIVIL STATE OF CALIFORNIA

The State of California or its officers or agents shall not be responsible for the accuracy or completeness of electronic copies of this plan sheet.

To get to the Caltrans web site, go to: http://www.dot.ca.gov

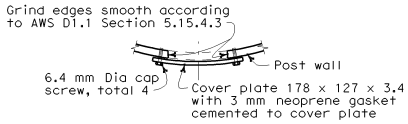

PLAN

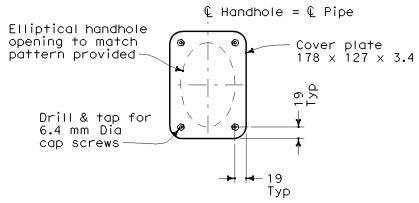

ELEVATION

UPPER HANDHOLE AND COVER DETAILS

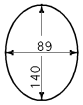

PATTERN OF ELLIPTICAL HANDHOLE CUT OUT

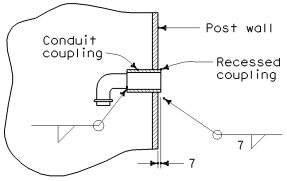

RECESSED COUPLING DETAIL

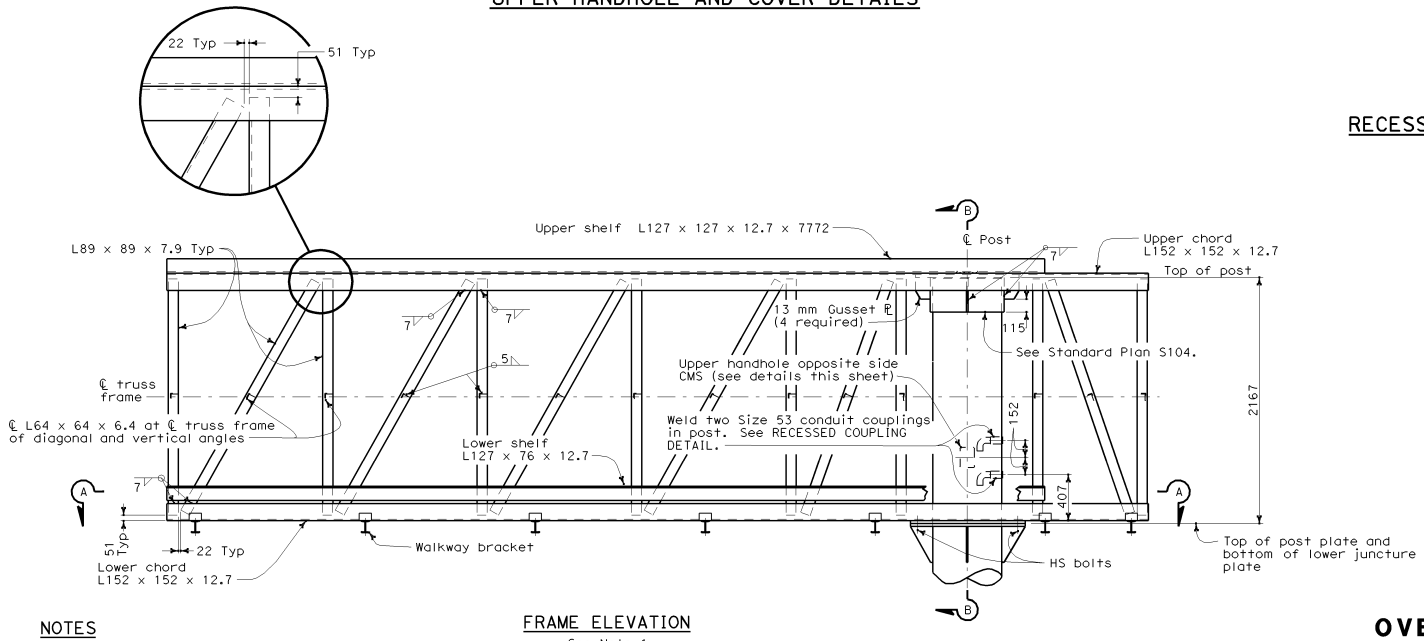

FRAME ELEVATION

See Note 1

NOTES

1. Walkways and safety anchorages not shown for clarity.
2. For Section B-B details, see Standard Plan S104.
3. For Section A-A details, including vertical angle spacing, see Standard Plan S104.

STATE OF CALIFORNIA
DEPARTMENT OF TRANSPORTATION

OVERHEAD SIGN-TRUSS SINGLE POST TYPE STRUCTURAL FRAME DETAILS UNBALANCED BUTTERFLY CHANGEABLE MESSAGE SIGNS MODEL 500

NO SCALE

ALL DIMENSIONS ARE IN MILLIMETERS UNLESS OTHERWISE SHOWN

S102

08-02-04

2004 Std PLAN S102

Back to Table of Contents

DIST	COUNTY	ROUTE	KILOMETER POST TOTAL PROJECT	SHEET NO.	TOTAL SHEETS

REGISTERED ~~CIVIL~~ ENGINEER

July 1, 2004
PLANS APPROVAL DATE

REGISTERED PROFESSIONAL ENGINEER
Tiliat Sattar
NO. C42892
Exp. 03-31-2006
CIVIL
STATE OF CALIFORNIA

The State of California or its officers or agents shall not be responsible for the accuracy or completeness of electronic copies of this plan sheet.

To get to the Caltrans web site, go to: http://www.dot.ca.gov

Caltrans Metric

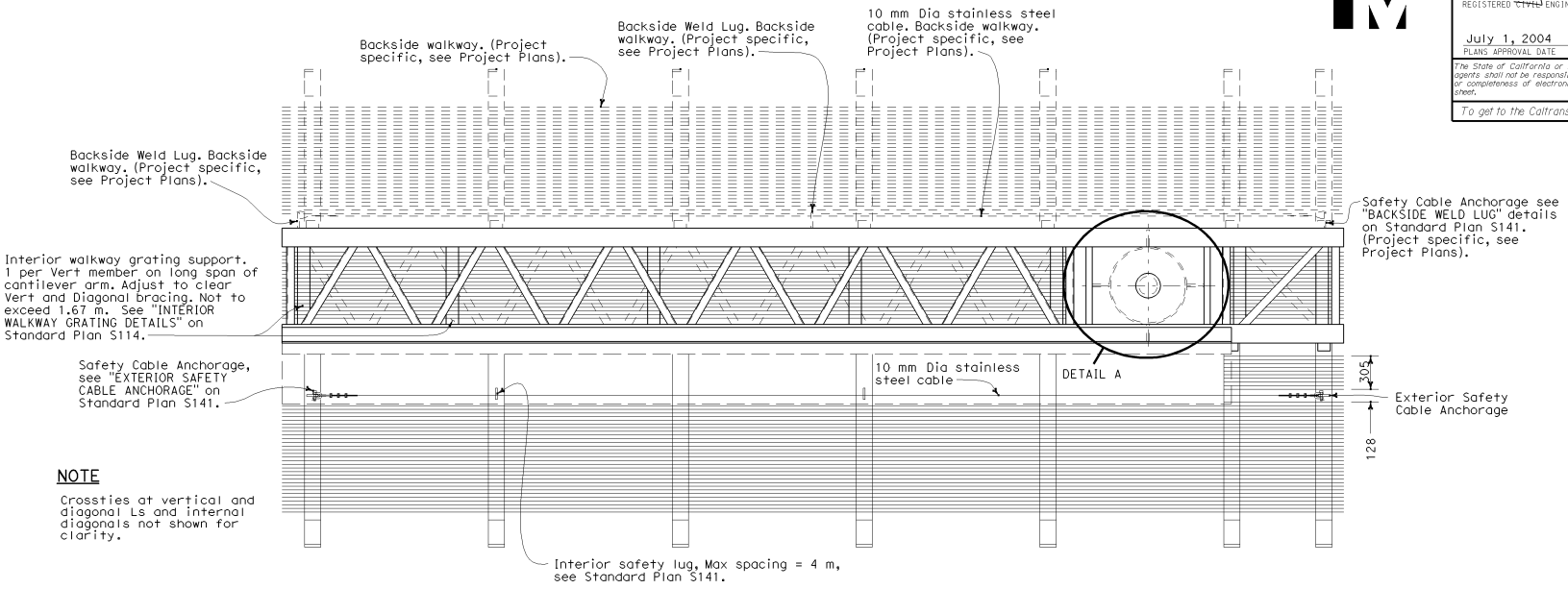

NOTE

Crossties at vertical and diagonal Ls and internal diagonals not shown for clarity.

PLAN

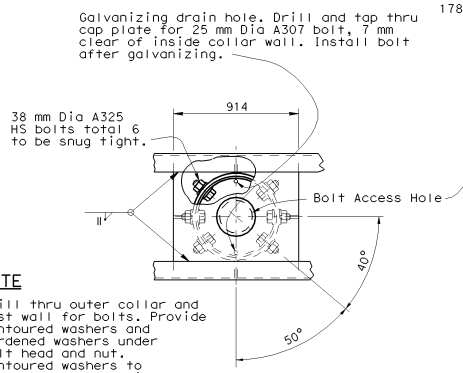

NOTE

Drill thru outer collar and post wall for bolts. Provide contoured washers and hardened washers under bolt head and nut. Contoured washers to be 76 x 76 x 8 mm Min. Grind face to fit.

DETAIL A

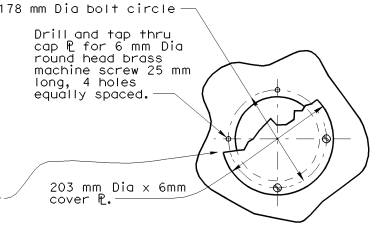

PLAN

BOLT-ACCESS HOLE

Single Post Type

STATE OF CALIFORNIA
DEPARTMENT OF TRANSPORTATION

OVERHEAD SIGN-TRUSS SINGLE POST TYPE PLAN AND UPPER BOLT DETAILS UNBALANCED BUTTERFLY CHANGABLE MESSAGE SIGNS MODEL 500

NO SCALE

ALL DIMENSIONS ARE IN MILLIMETERS UNLESS OTHERWISE SHOWN

S103

2004 Std PLAN S103

08-02-04

Back to Table of Contents

DIST	COUNTY	ROUTE	KILOMETER POST TOTAL PROJECT	SHEET NO.	TOTAL SHEETS

Caltrans Metric

REGISTERED CIVIL ENGINEER

July 1, 2004
PLANS APPROVAL DATE

REGISTERED PROFESSIONAL ENGINEER Tillat Sattar No. C42892 Exp. 03-31-2006 CIVIL STATE OF CALIFORNIA

The State of California or its officers or agents shall not be responsible for the accuracy or completeness of electronic copies of this plan sheet.

To get to the Caltrans web site, go to: http://www.dot.ca.gov

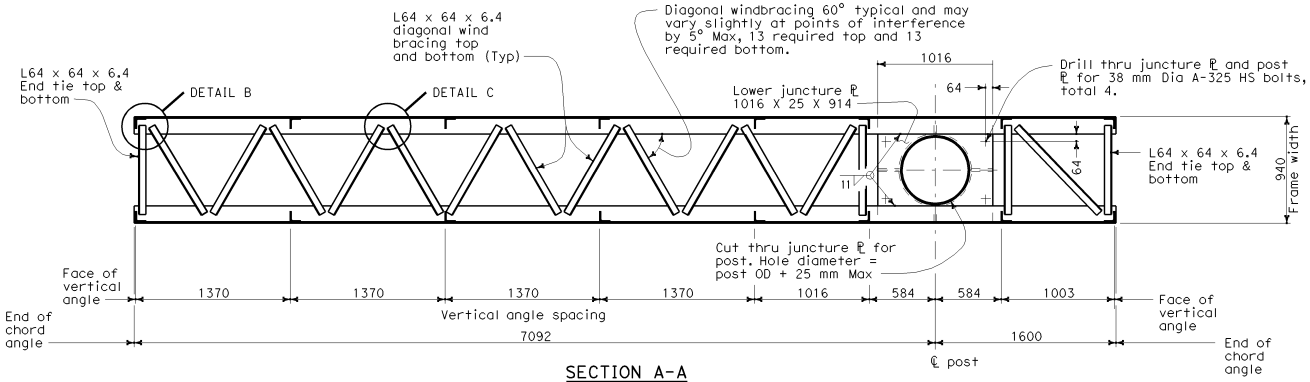

SECTION A-A
LOWER JUNCTURE CONNECTION

See Standard Plan S102

NOTES:

1. In all cases truss shall be supported at lower juncture connection.
2. Post to truss connections shall be fitted in shop. Faying surfaces shall meet tolerances noted in contract documents

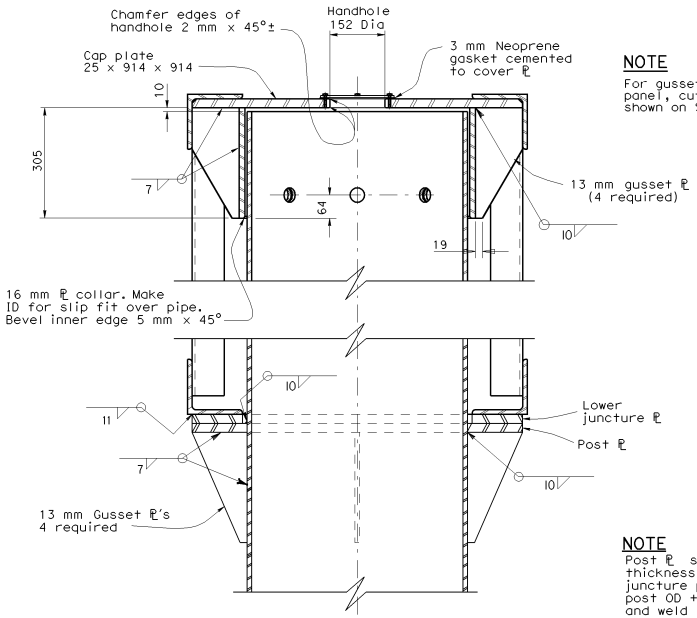

NOTE

For gussets parallel to the sign panel, cut to clear bolts as shown on Standard Plan S102.

SECTION B-B

See Standard Plan S102

NOTE

Post ℞ same size and thickness as lower juncture plate. Cut for post OD + 25 mm Max and weld to post

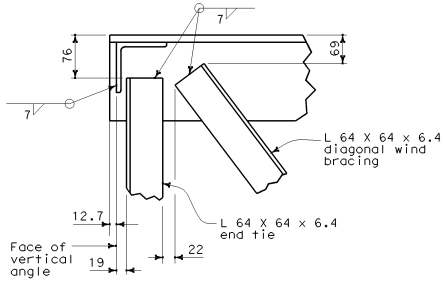

DETAIL B

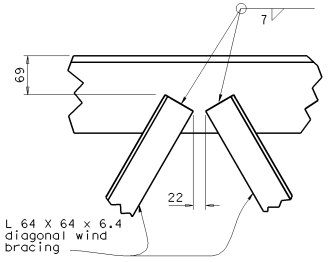

DETAIL C

STATE OF CALIFORNIA
DEPARTMENT OF TRANSPORTATION

OVERHEAD SIGN-TRUSS SINGLE POST TYPE FRAME JUNCTURE DETAILS UNBALANCED BUTTERFLY CHANGEABLE MESSAGE SIGNS MODEL 500

NO SCALE

ALL DIMENSIONS ARE IN MILLIMETERS UNLESS OTHERWISE SHOWN

S104

08-02-04

Back to Table of Contents

DIST	COUNTY	ROUTE	KILOMETER POST TOTAL PROJECT	SHEET NO.	TOTAL SHEETS

REGISTERED ~~CIVIL~~ ENGINEER

July 1, 2004
PLANS APPROVAL DATE

REGISTERED PROFESSIONAL ENGINEER
Tiliat Sattar
NO. C42892
Exp. 03-31-2006
CIVIL
STATE OF CALIFORNIA

The State of California or its officers or agents shall not be responsible for the accuracy or completeness of electronic copies of this plan sheet.

To get to the Caltrans web site, go to: http://www.dot.ca.gov

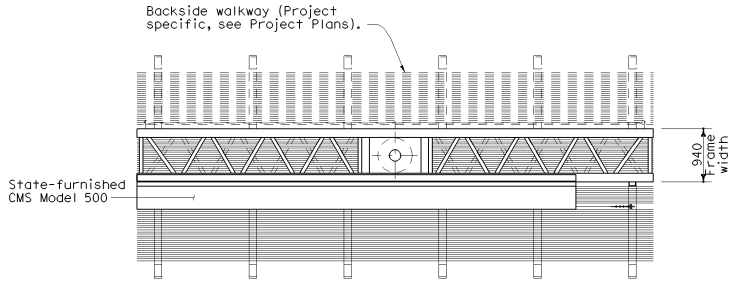

PLAN

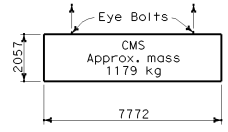

LIFTING DIAGRAM

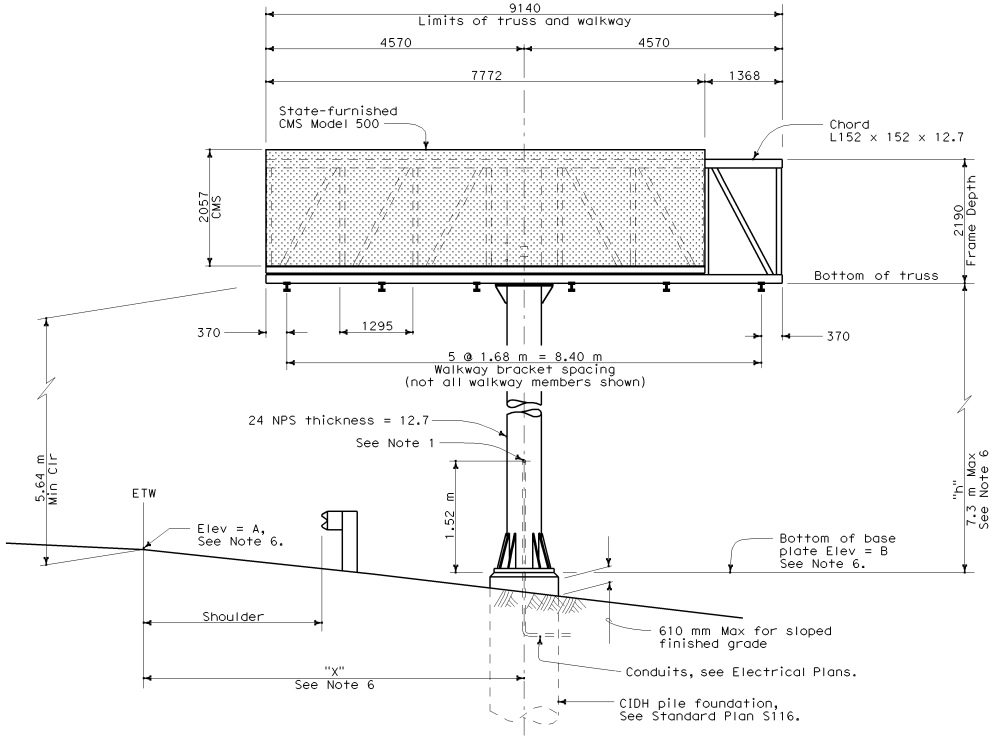

ELEVATION

NOTES

1. Drill and tap for Size 63 recessed pipe plug.
2. Changeable Message Sign will be State-furnished.
3. For location and elevation of sign structure, See Project Plans.
4. Sign support post shall be raked out of plumb with leveling nuts to make the bottom of the sign frame level.
5. At final position of post top and bottom nuts shall be tightened against base plate.
6. See Project Plans.

STATE OF CALIFORNIA
DEPARTMENT OF TRANSPORTATION

OVERHEAD SIGN-TRUSS SINGLE POST TYPE LAYOUT BALANCED BUTTERFLY CHANGEABLE MESSAGE SIGNS MODEL 500

NO SCALE

ALL DIMENSIONS ARE IN MILLIMETERS UNLESS OTHERWISE SHOWN

S105

08-02-04

Back to Table of Contents

DIST	COUNTY	ROUTE	KILOMETER POST TOTAL PROJECT	SHEET NO.	TOTAL SHEETS

REGISTERED CIVIL ENGINEER

July 1, 2004
PLANS APPROVAL DATE

REGISTERED PROFESSIONAL ENGINEER Tillat Sattar No. C42892 Exp. 03-31-2006 CIVIL STATE OF CALIFORNIA

The State of California or its officers or agents shall not be responsible for the accuracy or completeness of electronic copies of this plan sheet.

To get to the Caltrans web site, go to: http://www.dot.ca.gov

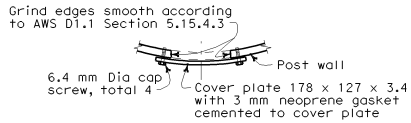

PLAN

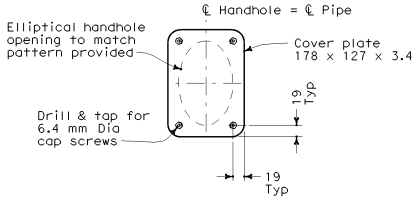

ELEVATION

UPPER HANDHOLE AND COVER DETAILS

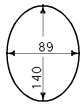

PATTERN OF ELLIPTICAL HANDHOLE CUT OUT

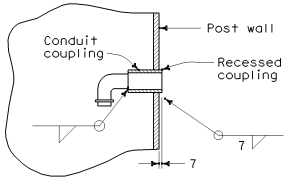

RECESSED COUPLING DETAIL

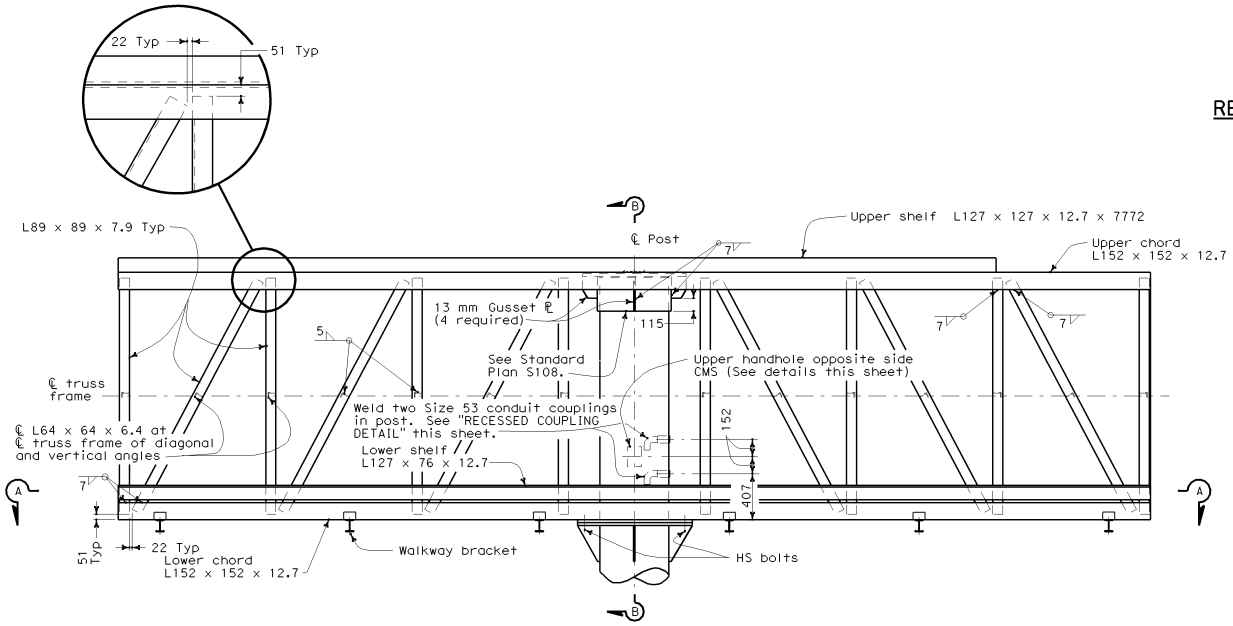

FRAME ELEVATION

See Note 1

NOTES

1. Walkways and safety anchorages not shown for clarity.
2. For Section B-B details, see Standard Plan S108.
3. For Section A-A details, including vertical angle spacing, see Standard Plan S108.

STATE OF CALIFORNIA
DEPARTMENT OF TRANSPORTATION

OVERHEAD SIGN-TRUSS SINGLE POST TYPE STRUCTURAL FRAME DETAILS BALANCED BUTTERFLY CHANGEABLE MESSAGE SIGNS MODEL 500

NO SCALE

ALL DIMENSIONS ARE IN MILLIMETERS UNLESS OTHERWISE SHOWN

S106

08-02-04

2004 Std PLAN S106

Back to Table of Contents

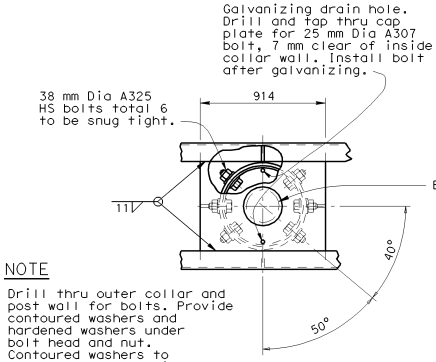

NOTE

Drill thru outer collar and post wall for bolts. Provide contoured washers and hardened washers under bolt head and nut. Contoured washers to be 76 x 76 x 8 mm Min Grind face to fit.

DETAIL A

No Scale

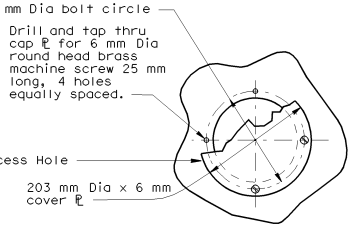

PLAN

BOLT-ACCESS HOLE

Single Post Type

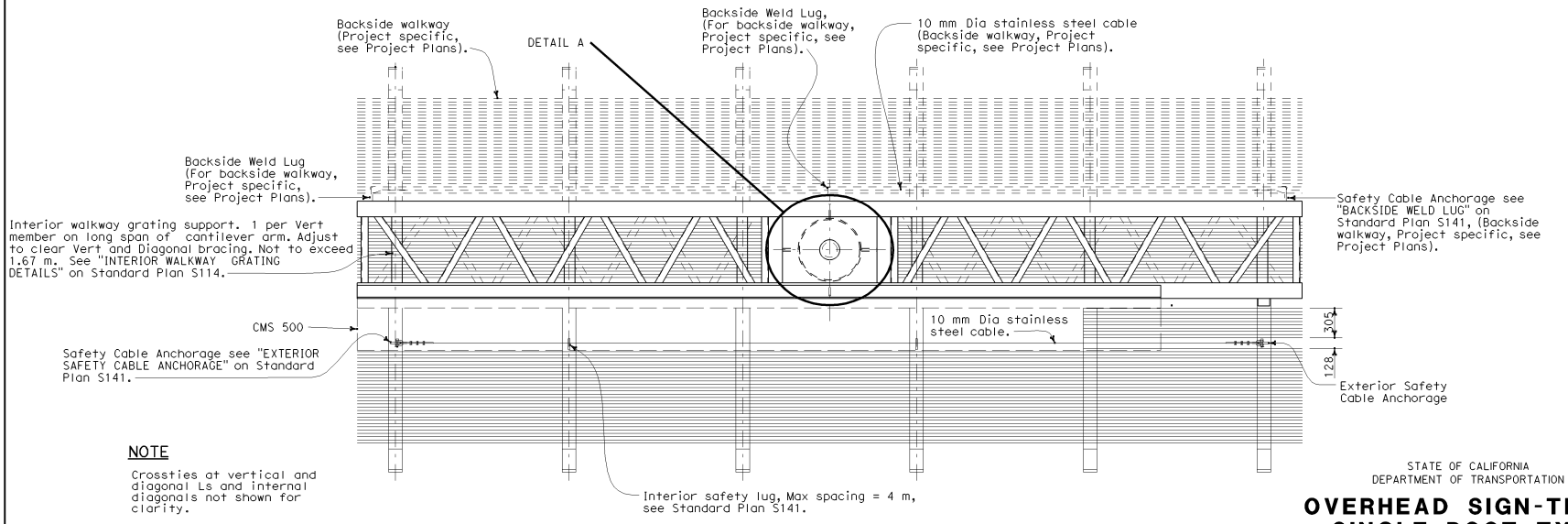

NOTE

Crossties at vertical and diagonal Ls and internal diagonals not shown for clarity.

PLAN

Caltrans Metric

DIST	COUNTY	ROUTE	KILOMETER POST TOTAL PROJECT	SHEET NO.	TOTAL SHEETS

REGISTERED CIVIL ENGINEER

July 1, 2004

PLANS APPROVAL DATE

REGISTERED PROFESSIONAL ENGINEER Tiliat Sattar NO. C42892 Exp. 03-31-2006 CIVIL STATE OF CALIFORNIA

The State of California or its officers or agents shall not be responsible for the accuracy or completeness of electronic copies of this plan sheet.

To get to the Caltrans web site, go to: http://www.dot.ca.gov

STATE OF CALIFORNIA
DEPARTMENT OF TRANSPORTATION

OVERHEAD SIGN-TRUSS SINGLE POST TYPE PLAN AND UPPER BOLT DETAILS BALANCED BUTTERFLY CHANGEABLE MESSAGE SIGNS MODEL 500

NO SCALE

ALL DIMENSIONS ARE IN MILLIMETERS UNLESS OTHERWISE SHOWN

S107

08-02-04

Back to Table of Contents

DIST	COUNTY	ROUTE	KILOMETER POST TOTAL PROJECT	SHEET NO.	TOTAL SHEETS

REGISTERED CIVIL ENGINEER

July 1, 2004
PLANS APPROVAL DATE

REGISTERED PROFESSIONAL ENGINEER Tillat Sattar No. C42892 Exp. 03-31-2006 CIVIL STATE OF CALIFORNIA

The State of California or its officers or agents shall not be responsible for the accuracy or completeness of electronic copies of this plan sheet.

To get to the Caltrans web site, go to: http://www.dot.ca.gov

Caltrans Metric

NOTE

Lower juncture ℙ same thickness as corresponding cap ℙ

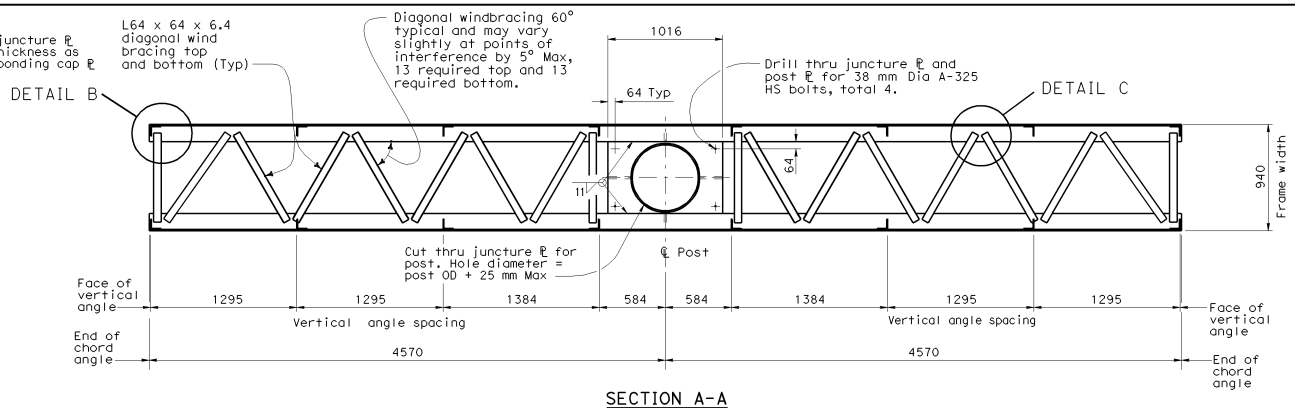

SECTION A-A
LOWER JUNCTURE CONNECTION

See Standard Plan S106

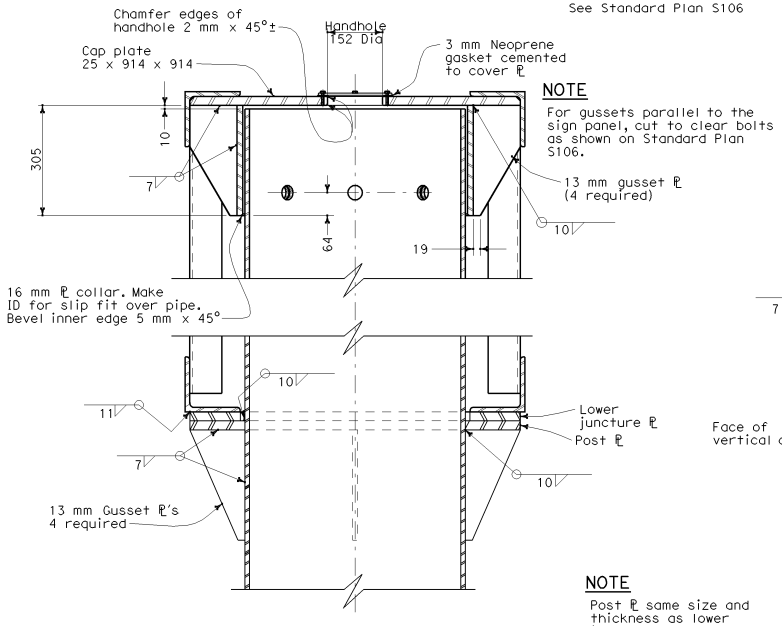

NOTE

For gussets parallel to the sign panel, cut to clear bolts as shown on Standard Plan S106.

NOTE

Post ℙ same size and thickness as lower juncture plate. Cut for post OD + 2 mm Max and weld to post

SECTION B-B

See Standard Plan S106

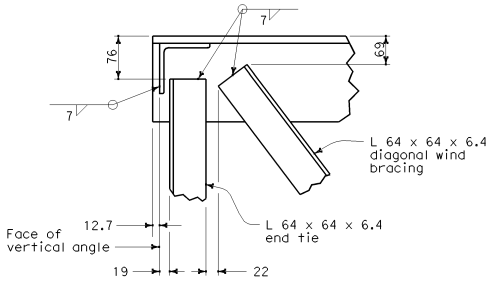

DETAIL B

NOTES:

1. In all cases, truss shall be supported at lower juncture connection.
2. Post to truss connections shall be fitted in shop. Faying surfaces shall meet tolerances noted in contract documents.

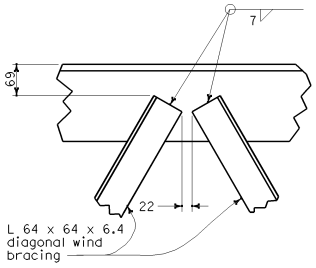

DETAIL C

STATE OF CALIFORNIA
DEPARTMENT OF TRANSPORTATION

OVERHEAD SIGN-TRUSS SINGLE POST TYPE FRAME JUNCTURE DETAILS BALANCED BUTTERFLY CHANGEABLE MESSAGE SIGNS MODEL 500

NO SCALE

ALL DIMENSIONS ARE IN MILLIMETERS UNLESS OTHERWISE SHOWN

S108

08-05-04

Back to Table of Contents

DIST	COUNTY	ROUTE	KILOMETER POST TOTAL PROJECT	SHEET NO.	TOTAL SHEETS

REGISTERED ~~CIVIL~~ ENGINEER

July 1, 2004
PLANS APPROVAL DATE

REGISTERED PROFESSIONAL ENGINEER
Tiliat Sattar
NO. C42892
Exp. 03-31-2006
CIVIL
STATE OF CALIFORNIA

The State of California or its officers or agents shall not be responsible for the accuracy or completeness of electronic copies of this plan sheet.

To get to the Caltrans web site, go to: http://www.dot.ca.gov

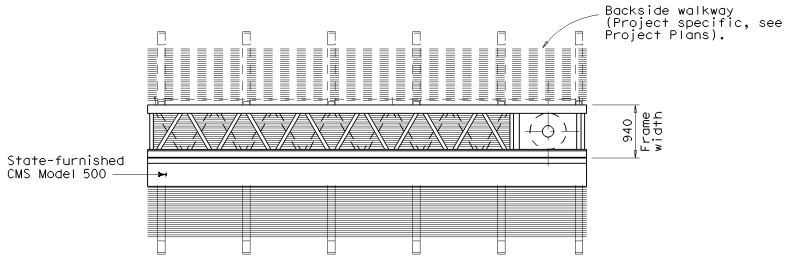

PLAN

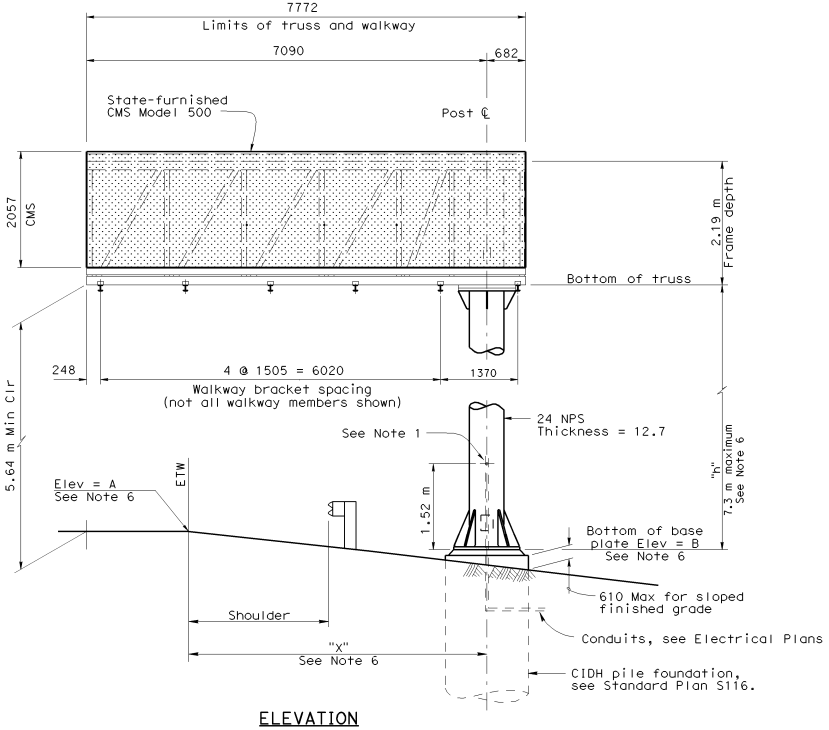

ELEVATION

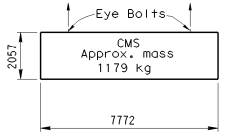

LIFTING DIAGRAM

NOTES

1. Drill and tap for Size 63 recessed pipe plug.
2. Changeable Message Sign will be State-furnished.
3. For location and elevation of sign structure see Project Plans.
4. Sign support post shall be raked out of plumb with leveling nuts to make the bottom of the sign frame level.
5. At final position of post top and bottom nuts shall be tightened against base plate.
6. See Project Plans.

STATE OF CALIFORNIA
DEPARTMENT OF TRANSPORTATION

OVERHEAD SIGN-TRUSS SINGLE POST TYPE LAYOUT FULL CANTILEVER CHANGEABLE MESSAGE SIGNS MODEL 500

NO SCALE

ALL DIMENSIONS ARE IN MILLIMETERS UNLESS OTHERWISE SHOWN

S109

08-02-04

Back to Table of Contents

DIST	COUNTY	ROUTE	KILOMETER POST TOTAL PROJECT	SHEET NO.	TOTAL SHEETS

REGISTERED CIVIL ENGINEER

July 1, 2004
PLANS APPROVAL DATE

REGISTERED PROFESSIONAL ENGINEER Tillat Sattar No. C42892 Exp. 03-31-2006 CIVIL STATE OF CALIFORNIA

The State of California or its officers or agents shall not be responsible for the accuracy or completeness of electronic copies of this plan sheet.

To get to the Caltrans web site, go to: http://www.dot.ca.gov

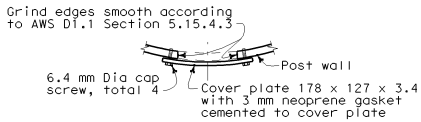

PLAN

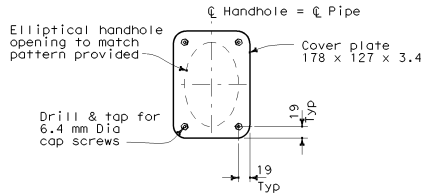

ELEVATION

UPPER HANDHOLE AND COVER DETAILS

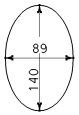

PATTERN OF ELLIPTICAL HANDHOLE CUT OUT

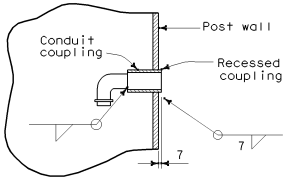

RECESSED COUPLING DETAIL

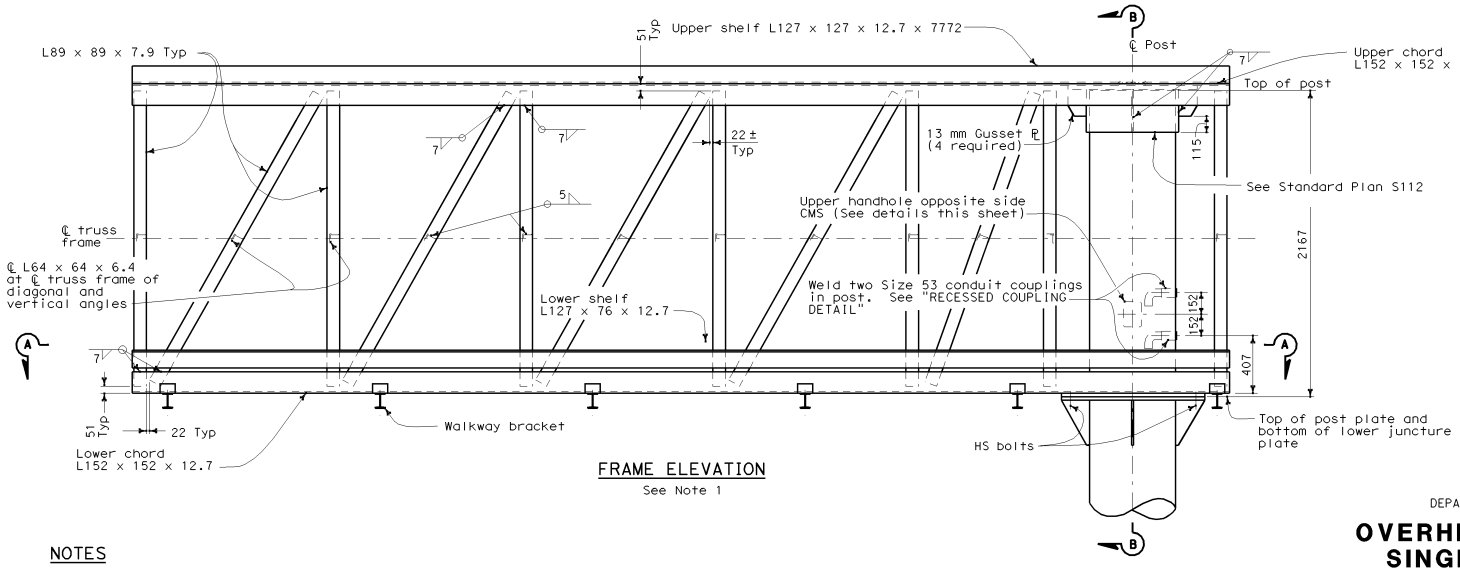

FRAME ELEVATION

See Note 1

NOTES

1. Walkways and safety anchorages not shown for clarity.
2. For Section B-B details, see Standard Plan S112.
3. For Section A-A details, including vertical angle spacing, see Standard Plan S112.

STATE OF CALIFORNIA
DEPARTMENT OF TRANSPORTATION

OVERHEAD SIGN-TRUSS SINGLE POST TYPE STRUCTURAL FRAME DETAILS FULL CANTILEVER CHANGEABLE MESSAGE SIGNS MODEL 500

NO SCALE

ALL DIMENSIONS ARE IN MILLIMETERS UNLESS OTHERWISE SHOWN

S110

08-02-04

Back to Table of Contents

DIST	COUNTY	ROUTE	KILOMETER POST TOTAL PROJECT	SHEET NO.	TOTAL SHEETS

Caltrans Metric

REGISTERED CIVIL ENGINEER

July 1, 2004
PLANS APPROVAL DATE

REGISTERED PROFESSIONAL ENGINEER
Tiliat Sattar
NO. C42892
Exp. 03-31-2006
CIVIL
STATE OF CALIFORNIA

The State of California or its officers or agents shall not be responsible for the accuracy or completeness of electronic copies of this plan sheet.

To get to the Caltrans web site, go to: http://www.dot.ca.gov

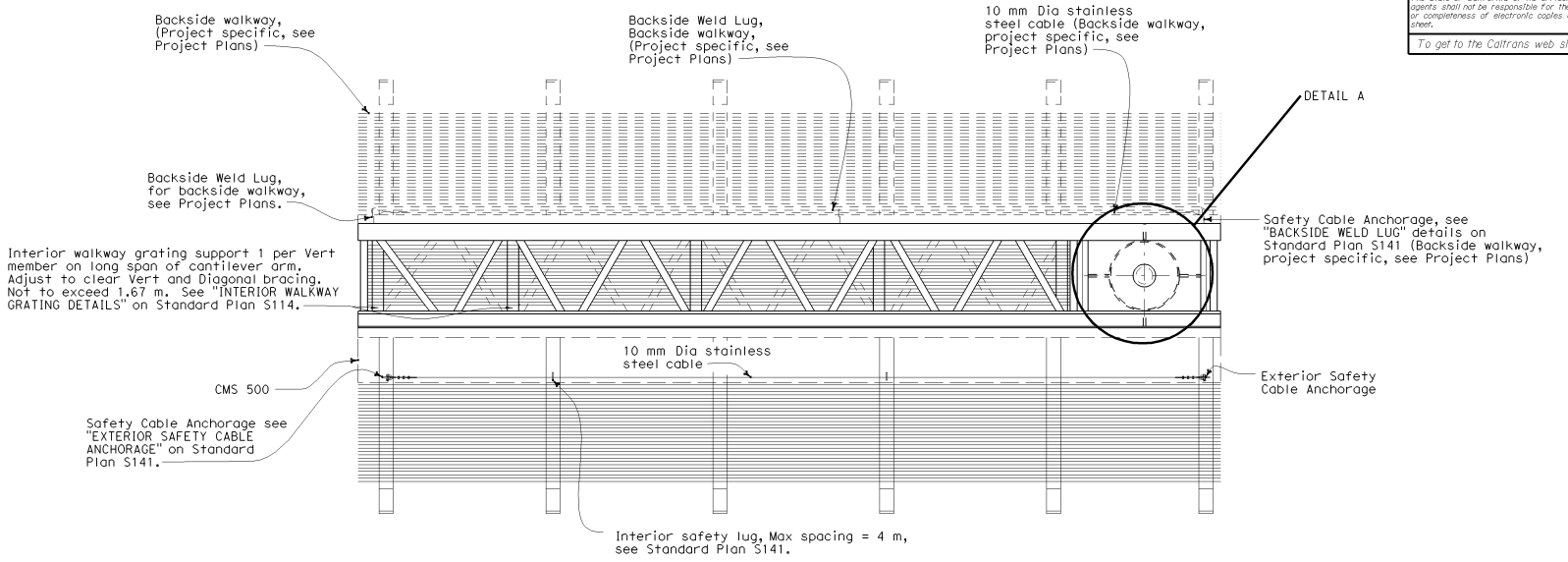

PLAN

NOTE

Crossties at vertical and diagonal Ls, and internal diagonals not shown for clarity.

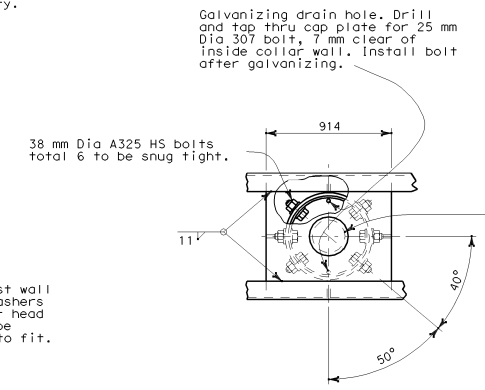

DETAIL A

NOTE

Drill thru outer collar and post wall for bolts. Provide contoured washers and hardened washers under bolt head and nut. Contoured washers to be 76 x 76 x 8 mm Min Grind face to fit.

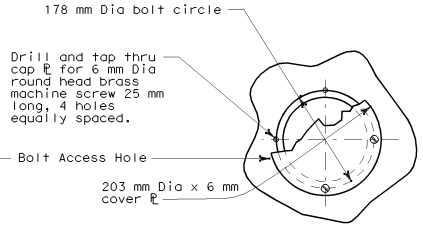

PLAN

BOLT-ACCESS HOLE

Single Post Type

STATE OF CALIFORNIA
DEPARTMENT OF TRANSPORTATION

OVERHEAD SIGN-TRUSS SINGLE POST TYPE PLAN AND UPPER BOLT DETAILS FULL CANTILEVER CHANGEABLE MESSAGE SIGNS MODEL 500

NO SCALE

ALL DIMENSIONS ARE IN MILLIMETERS UNLESS OTHERWISE SHOWN

S111

08-02-04

Back to Table of Contents

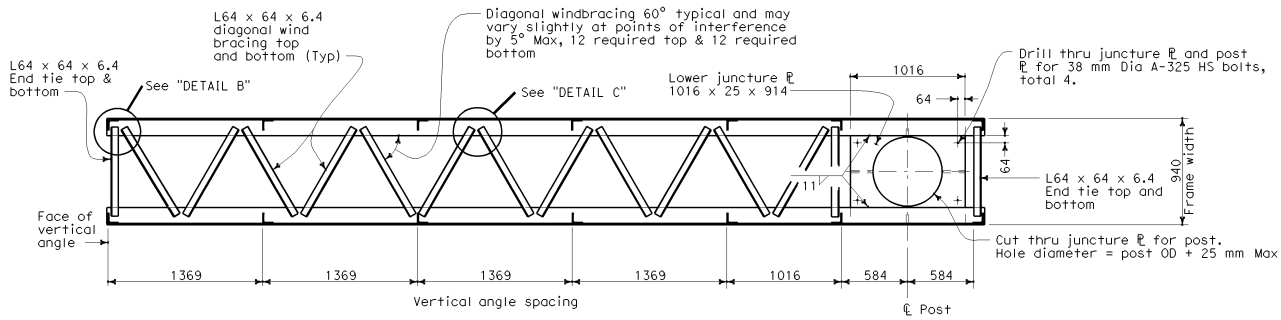

SECTION A-A
LOWER JUNCTURE CONNECTION

See Standard Plan S110

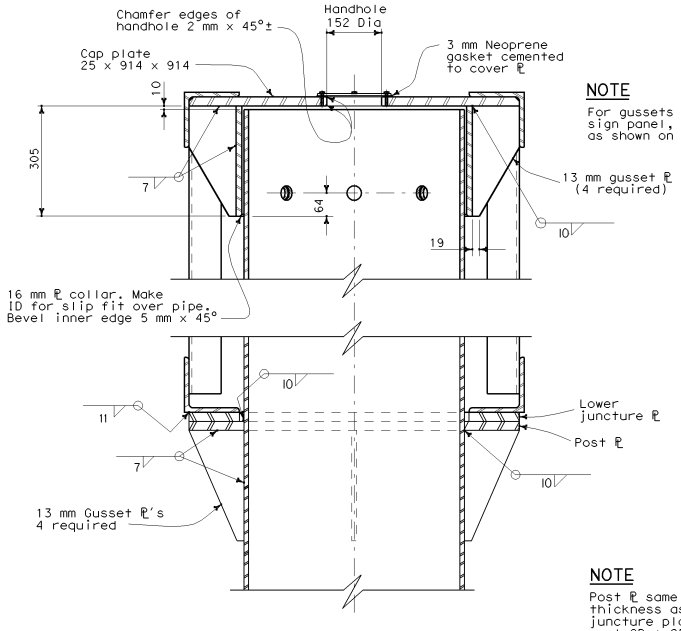

SECTION B-B

See Standard Plan S110

NOTE

For gussets parallel to the sign panel, cut to clear bolts as shown on Standard Plan S110.

NOTE

Post ℄ same size and thickness as lower juncture plate. Cut for post OD + 25 mm Max and weld to post

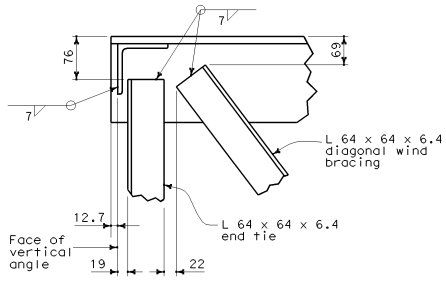

DETAIL B

NOTES

1. In all cases truss shall be supported at lower juncture connection.
2. Post to truss connections shall be fitted in shop. Faying surfaces shall meet tolerances noted in contract documents.

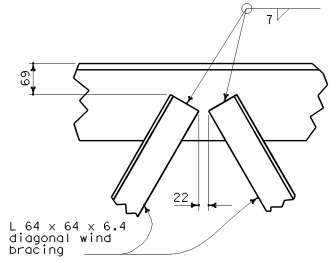

DETAIL C

Caltrans Metric

DIST	COUNTY	ROUTE	KILOMETER POST TOTAL PROJECT	SHEET NO.	TOTAL SHEETS

REGISTERED CIVIL ENGINEER

July 1, 2004
PLANS APPROVAL DATE

REGISTERED PROFESSIONAL ENGINEER Tillat Sattar No. C42892 Exp. 03-31-2006 CIVIL STATE OF CALIFORNIA

The State of California or its officers or agents shall not be responsible for the accuracy or completeness of electronic copies of this plan sheet.

To get to the Caltrans web site, go to: http://www.dot.ca.gov

STATE OF CALIFORNIA
DEPARTMENT OF TRANSPORTATION

OVERHEAD SIGN-TRUSS SINGLE POST TYPE FRAME JUNCTURE DETAILS FULL CANTILEVER CHANGEABLE MESSAGE SIGNS MODEL 500

NO SCALE

ALL DIMENSIONS ARE IN MILLIMETERS UNLESS OTHERWISE SHOWN

S112

08-02-04

Back to Table of Contents

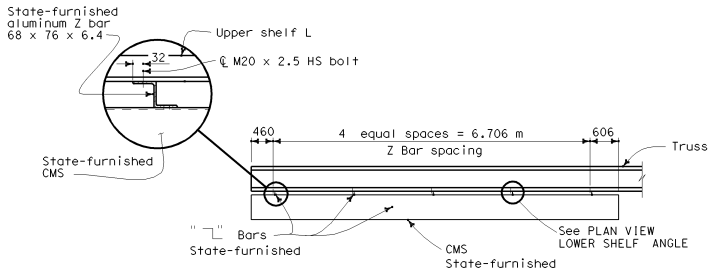

ALUMINUM Z BAR SPACING

NOTE

Contractor shall verify Z bar spacing prior to drilling holes in shelf angle

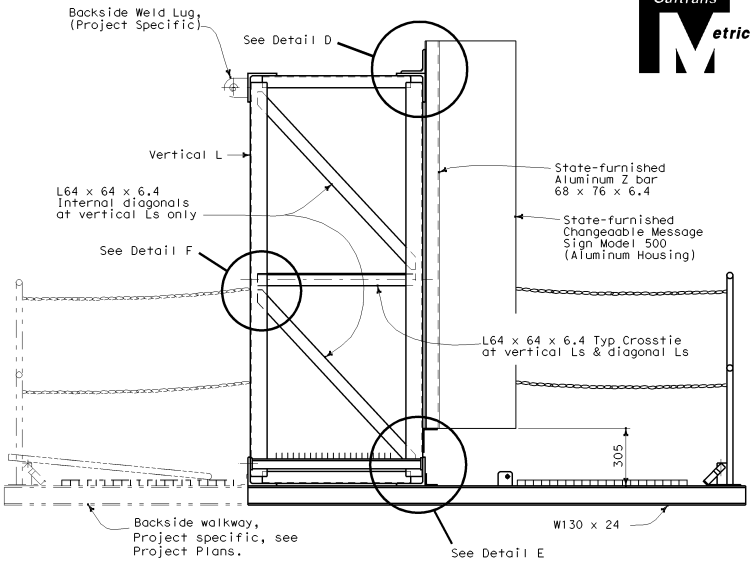

TYPICAL SECTION FRAME

NOTE

Diagonal Ls in plane of truss not shown. Bracing shown is at all vertical Ls of truss.

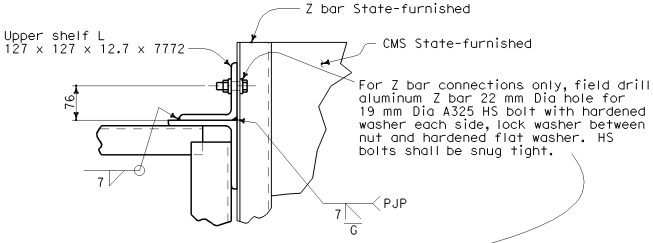

DETAIL D

No Scale

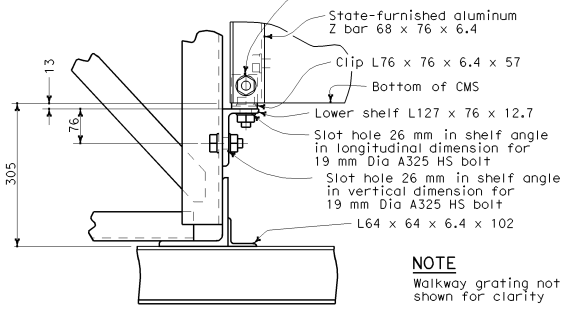

NOTE

Walkway grating not shown for clarity

DETAIL E

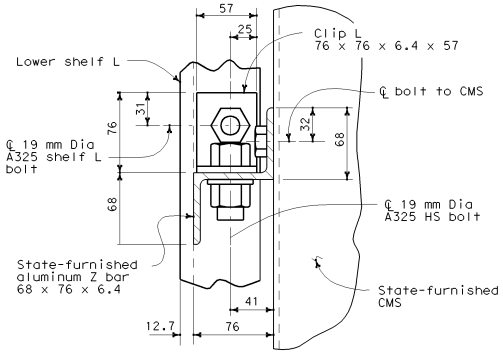

PLAN VIEW Z BAR AT LOWER SHELF ANGLE

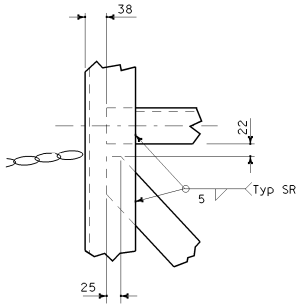

DETAIL F

STATE OF CALIFORNIA
DEPARTMENT OF TRANSPORTATION

OVERHEAD SIGN-TRUSS SINGLE POST TYPE MOUNTING DETAILS CHANGEABLE MESSAGE SIGNS MODEL 500

NO SCALE

ALL DIMENSIONS ARE IN MILLIMETERS UNLESS OTHERWISE SHOWN

S113

Caltrans Metric

DIST	COUNTY	ROUTE	KILOMETER POST TOTAL PROJECT	SHEET NO.	TOTAL SHEETS

REGISTERED CIVIL ENGINEER

July 1, 2004
PLANS APPROVAL DATE

REGISTERED PROFESSIONAL ENGINEER Tiliat Sattar NO. C42892 Exp. 03-31-2006 CIVIL STATE OF CALIFORNIA

The State of California or its officers or agents shall not be responsible for the accuracy or completeness of electronic copies of this plan sheet.

To get to the Caltrans web site, go to: http://www.dot.ca.gov

08-02-04

Back to Table of Contents

DIST	COUNTY	ROUTE	KILOMETER POST TOTAL PROJECT	SHEET NO.	TOTAL SHEETS

REGISTERED CIVIL ENGINEER

July 1, 2004
PLANS APPROVAL DATE

REGISTERED PROFESSIONAL ENGINEER Tillat Sattar No. C42892 Exp. 03-31-2006 CIVIL STATE OF CALIFORNIA

The State of California or its officers or agents shall not be responsible for the accuracy or completeness of electronic copies of this plan sheet.

To get to the Caltrans web site, go to: http://www.dot.ca.gov

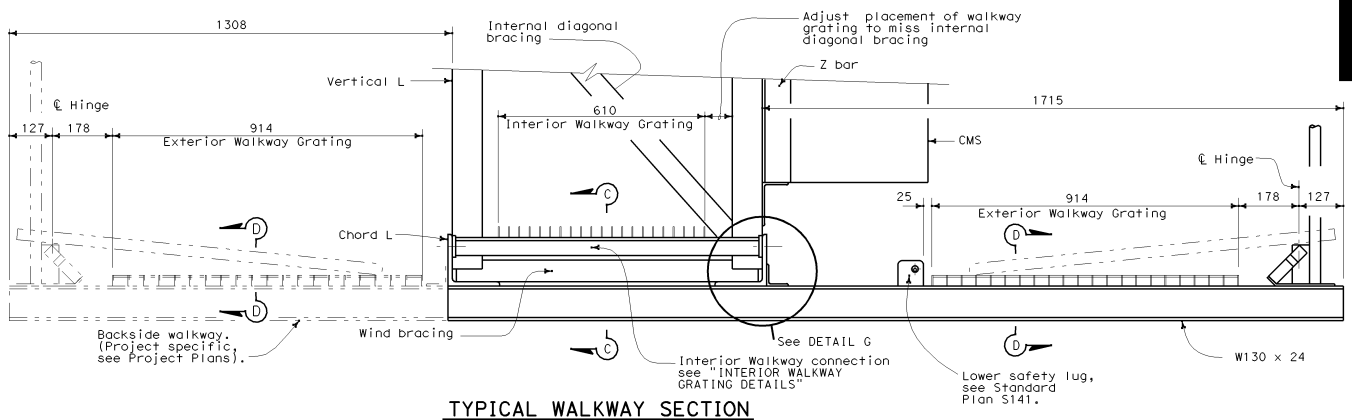

TYPICAL WALKWAY SECTION

NOTES

1. Welded type grating shall have 32 x 3 bearing bars at 30 centers with 6 mm diameter (or equal) cross bars at 102 mm centers. If mechanical lock grating is used, it shall be equal in strength to the welded type. Alternative hold-down clips may be submitted for approval.
2. Walkway grating to be continuous (no splices) over as many walkway brackets as practicable consistent with fabrication, ease of handling and assembly.

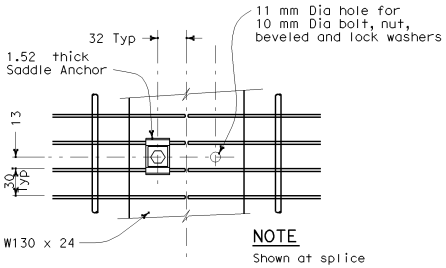

NOTE
Shown at splice

PLAN

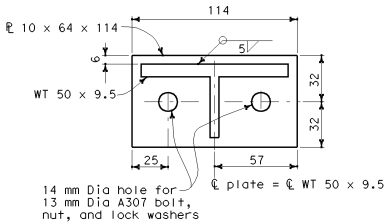

END PLATE CONNECTOR DETAIL

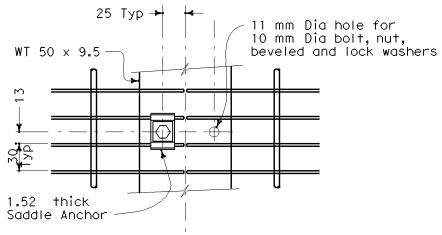

PLAN

NOTE
Shown at splice

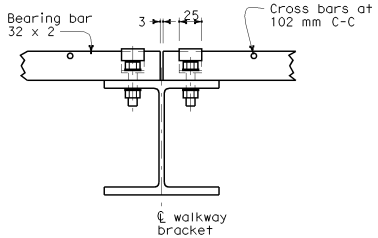

SECTION C-C

EXTERIOR WALKWAY GRATING DETAILS

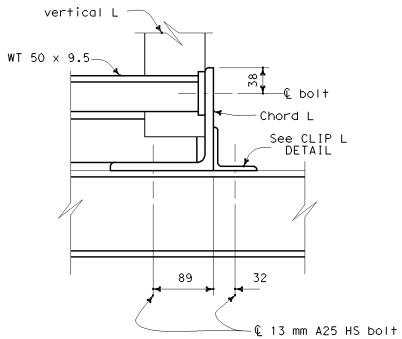

DETAIL G

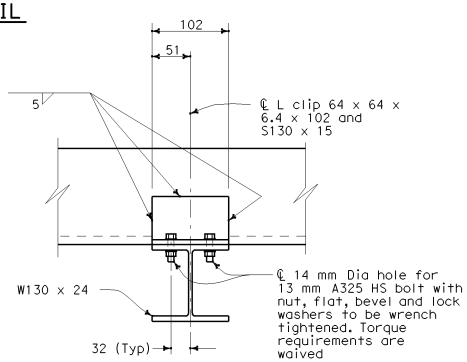

CLIP L DETAIL

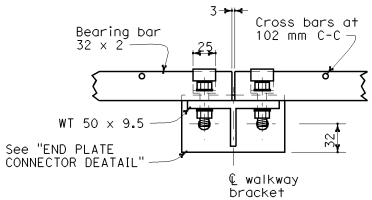

SECTION D-D

INTERIOR WALKWAY GRATING DETAILS

STATE OF CALIFORNIA
DEPARTMENT OF TRANSPORTATION

OVERHEAD SIGN-TRUSS SINGLE POST TYPE WALKWAY DETAILS CHANGEABLE MESSAGE SIGNS MODEL 500

NO SCALE

ALL DIMENSIONS ARE IN MILLIMETERS UNLESS OTHERWISE SHOWN

S114

08-02-04

Back to Table of Contents

DIST	COUNTY	ROUTE	KILOMETER POST TOTAL PROJECT	SHEET NO.	TOTAL SHEETS

REGISTERED CIVIL ENGINEER

July 1, 2004
PLANS APPROVAL DATE

REGISTERED PROFESSIONAL ENGINEER Tiliat Sattar NO. C42892 Exp. 03-31-2006 CIVIL STATE OF CALIFORNIA

The State of California or its officers or agents shall not be responsible for the accuracy or completeness of electronic copies of this plan sheet.

To get to the Caltrans web site, go to: http://www.dot.ca.gov

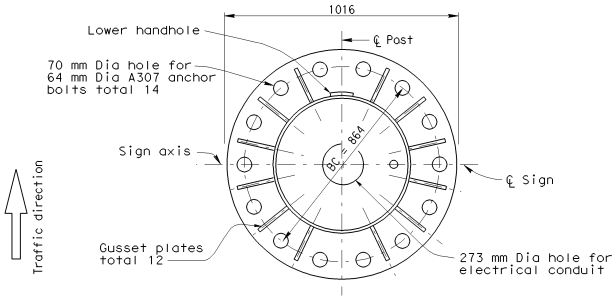

14 BOLTS BASE PLATE DETAILS

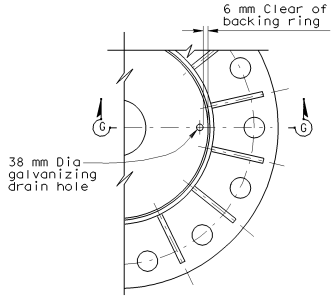

GALVANIZING HOLE LAYOUT

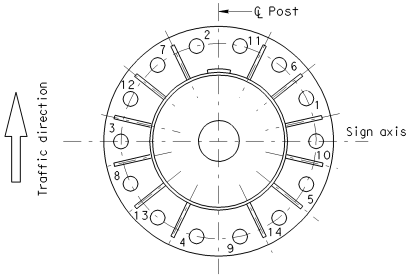

TIGHTENING SEQUENCE

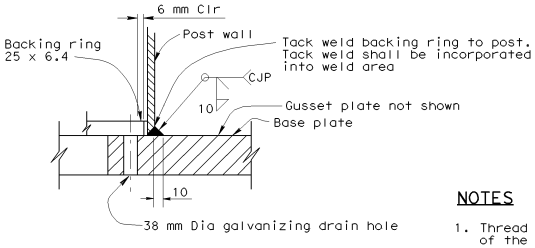

SECTION G-G
WELDING DETAIL

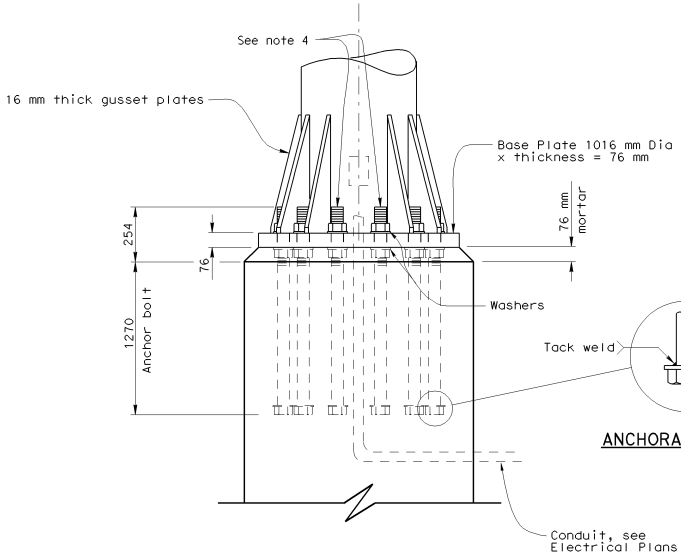

ANCHORAGE DETAIL

ELEVATION

NOTES

1. Thread upper 254 mm and galvanize upper 305 mm of the anchor bolts.
2. Provide bolt template during installation of anchor bolts.
3. Following initial tightening, Upper nuts shall be brought to a snug tight condition. This can be obtained by a few impacts of an impact wrench or the full effort of a man using an ordinary spud wrench. Snug tightening shall progress systematically according to the tightening sequence as shown. Upper nuts and washers to have full even bearing on base plate.
4. 64 mm Dia anchor bolts with nut, leveling nut and 3 flat washers per bolt. Leveling nuts and washers to be adjusted for full even bearing on base plate prior to final tightening of upper nuts. (See note 3)

STATE OF CALIFORNIA
DEPARTMENT OF TRANSPORTATION

OVERHEAD SIGN-TRUSS SINGLE POST TYPE ANCHORAGE AND BASE PLATE DETAILS CHANGEABLE MESSAGE SIGNS MODEL 500

NO SCALE

ALL DIMENSIONS ARE IN MILLIMETERS UNLESS OTHERWISE SHOWN

S115

08-02-04

Back to Table of Contents

DIST	COUNTY	ROUTE	KILOMETER POST TOTAL PROJECT	SHEET NO.	TOTAL SHEETS

REGISTERED CIVIL ENGINEER

July 1, 2004
PLANS APPROVAL DATE

REGISTERED PROFESSIONAL ENGINEER
No.
Exp.
STATE OF CALIFORNIA

The State of California or its officers or agents shall not be responsible for the accuracy or completeness of electronic copies of this plan sheet.

To get to the Caltrans web site, go to: http://www.dot.ca.gov

Caltrans Metric

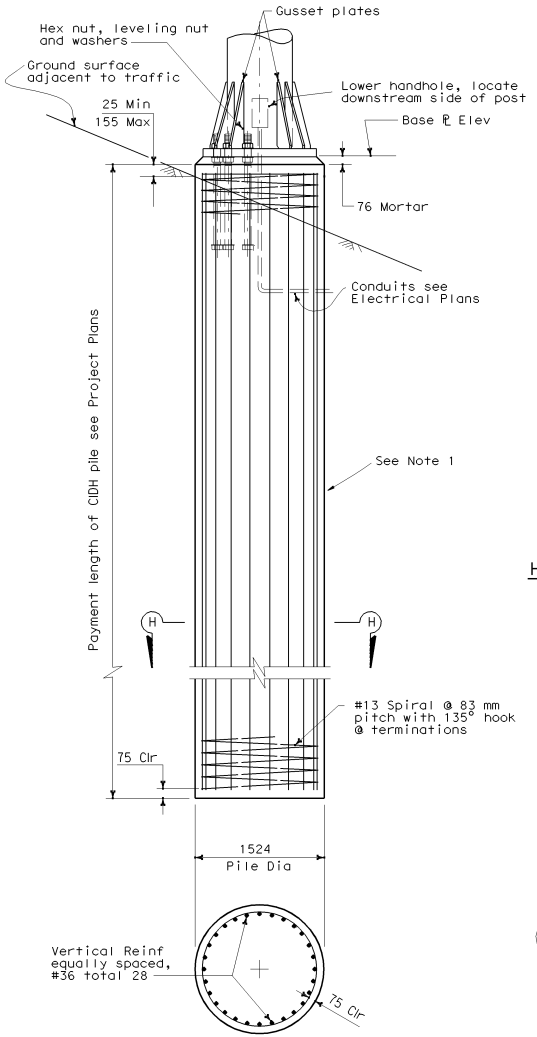

SECTION H-H

CIDH PILE FOUNDATION DETAILS

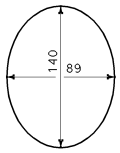

PATTERN OF ELLIPTICAL HANDHOLE CUT OUT

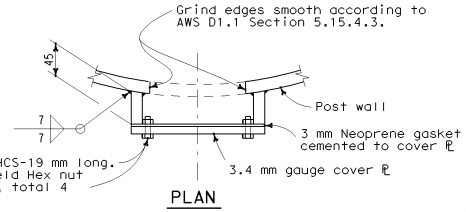

PLAN

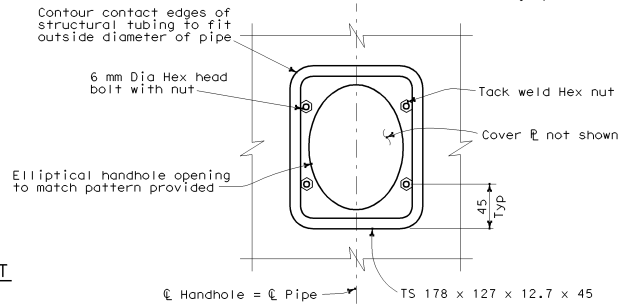

ELEVATION

LOWER HANDHOLE AND COVER DETAILS

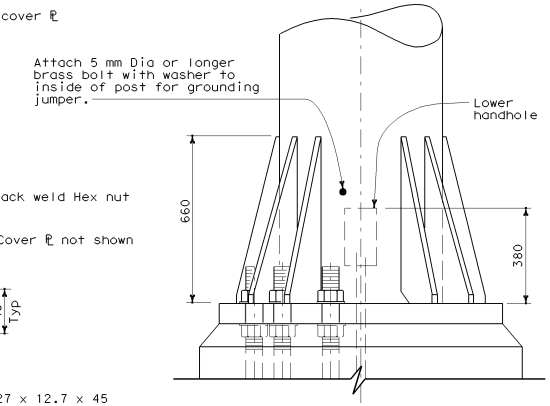

POST BASE ELEVATION

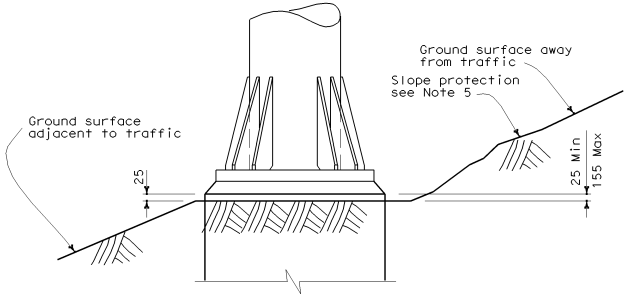

DETAIL C

NOTES

1. Pile shall be placed against undisturbed material.
2. Primer and paint post interior from base plate to 150 mm above lower handhole-unless post is galvanized.
3. On single post sign structures, the post shall be raked out of plumb, with the use of leveling nuts to make the bottom of the sign frame level.
4. When foundation is located on a steep slope with exposed face of concrete adjacent to traffic, see "DETAIL C".
5. Slope protection required when indicated on Project Plans.
6. Foundation design is based on 2001 AASHTO Article 13.6, assuming a cohesionless material. The angle of shearing resistance Dia used is 30°. The unit weight of soil used is 1922 kg/m³.

STATE OF CALIFORNIA
DEPARTMENT OF TRANSPORTATION

OVERHEAD SIGN-TRUSS SINGLE POST TYPE FOUNDATION AND MISCELLANEOUS DETAILS CHANGEABLE MESSAGE SIGNS MODEL 500

NO SCALE

ALL DIMENSIONS ARE IN MILLIMETERS UNLESS OTHERWISE SHOWN

S116

08-05-04

Back to Table of Contents

DIST	COUNTY	ROUTE	KILOMETER POST TOTAL PROJECT	SHEET NO.	TOTAL SHEETS

REGISTERED ~~CIVIL~~ ENGINEER

July 1, 2004
PLANS APPROVAL DATE

REGISTERED PROFESSIONAL ENGINEER Tiliat Sattar NO. C42892 Exp. 03-31-2006 CIVIL STATE OF CALIFORNIA

The State of California or its officers or agents shall not be responsible for the accuracy or completeness of electronic copies of this plan sheet.

To get to the Caltrans web site, go to: http://www.dot.ca.gov

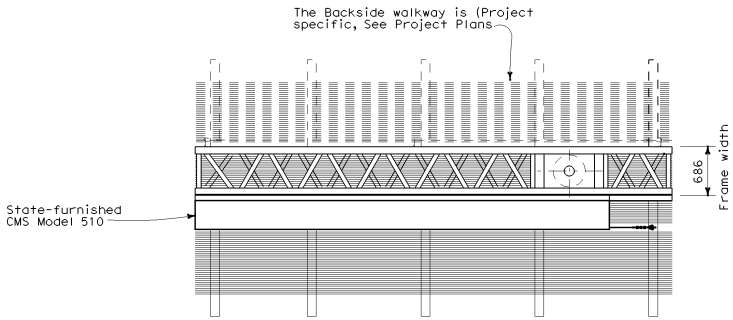

PLAN

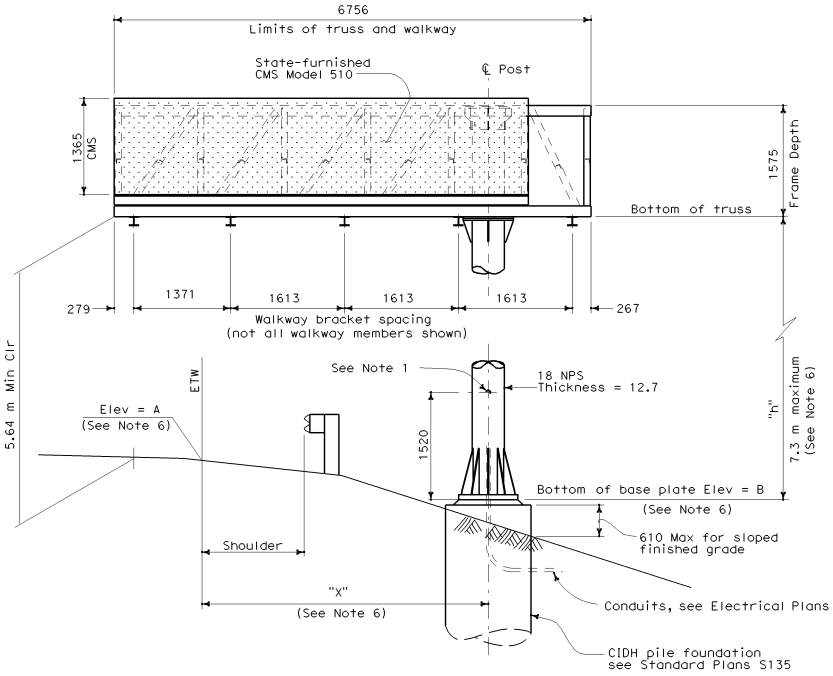

ELEVATION

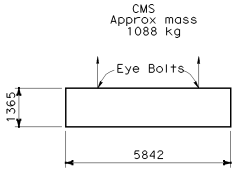

LIFTING DIAGRAM

NOTES

1. Drill and tap for Size 63 recessed pipe plug.
2. Changeable Message Sign will be State-furnished.
3. For location and elevation of sign structure see Project Plans.
4. Sign support post shall be raked out of plumb with leveling nuts to make the bottom of the sign frame level.
5. At final position of post top and bottom nuts shall be tightened against base plate.
6. See Project Plans.

STATE OF CALIFORNIA
DEPARTMENT OF TRANSPORTATION

OVERHEAD SIGN-TRUSS SINGLE POST TYPE LAYOUT UNBALANCED BUTTERFLY CHANGEABLE MESSAGE SIGNS MODEL 510

NO SCALE

ALL DIMENSIONS ARE IN MILLIMETERS UNLESS OTHERWISE SHOWN

S120

08-02-04

Back to Table of Contents

DIST	COUNTY	ROUTE	KILOMETER POST TOTAL PROJECT	SHEET NO.	TOTAL SHEETS

REGISTERED CIVIL ENGINEER

July 1, 2004
PLANS APPROVAL DATE

REGISTERED PROFESSIONAL ENGINEER Tillat Sattar No. C42892 Exp. 03-31-2006 CIVIL STATE OF CALIFORNIA

The State of California or its officers or agents shall not be responsible for the accuracy or completeness of electronic copies of this plan sheet.

To get to the Caltrans web site, go to: http://www.dot.ca.gov

Caltrans Metric

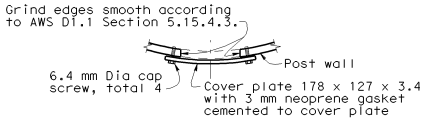

PLAN

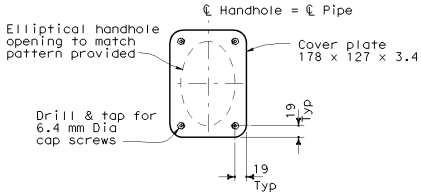

ELEVATION

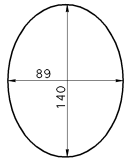

PATTERN OF ELLIPTICAL HANDHOLE CUT OUT

UPPER HANDHOLE & COVER DETAILS

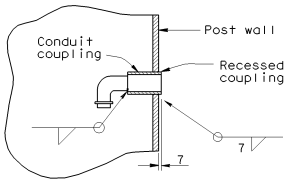

RECESSED COUPLING DETAIL

NOTES

1. Walkways and safety anchorages not shown for clarity.
2. For SECTION A-A see Standard Plan S123.
3. For SECTION B-B see Standard Plan S123.

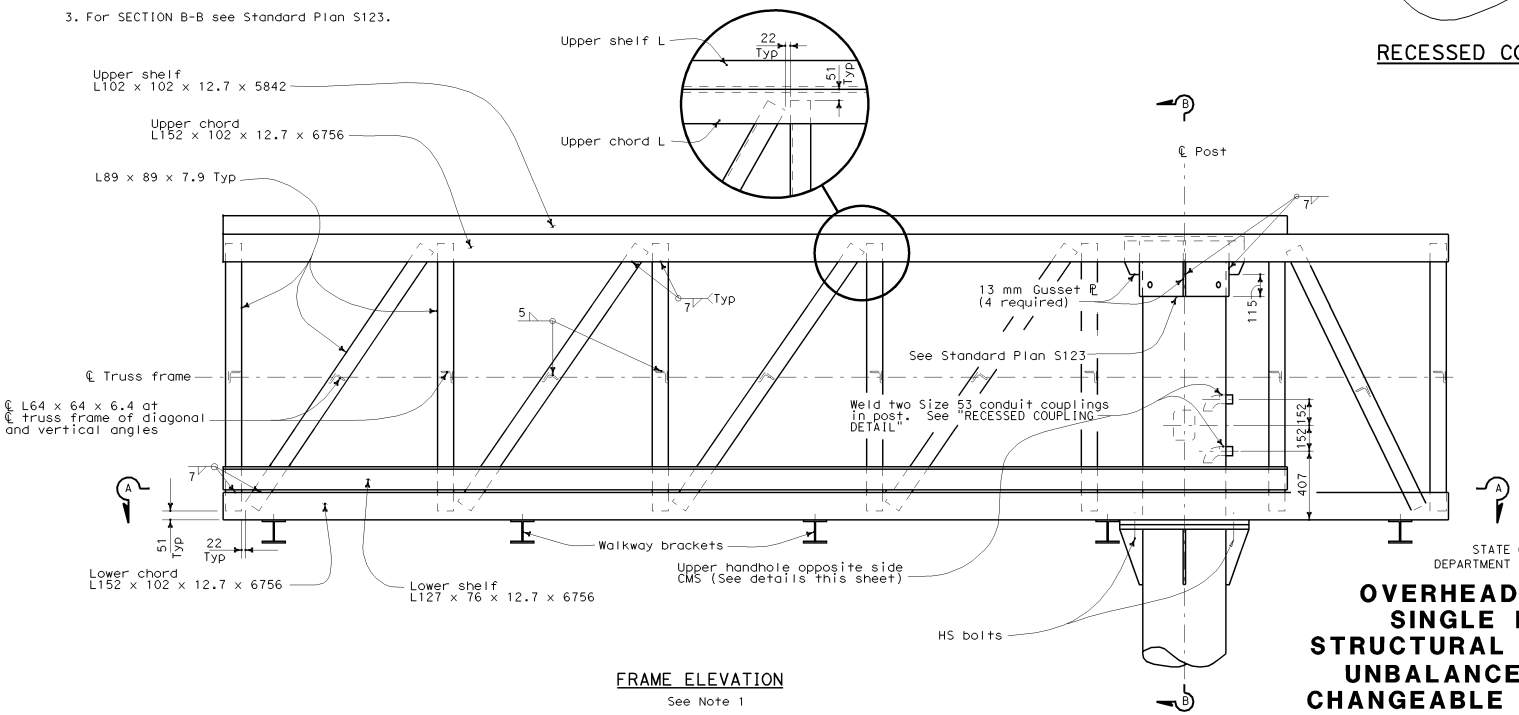

FRAME ELEVATION

See Note 1

STATE OF CALIFORNIA
DEPARTMENT OF TRANSPORTATION

OVERHEAD SIGN-TRUSS SINGLE POST TYPE STRUCTURAL FRAME DETAILS UNBALANCED BUTTERFLY CHANGEABLE MESSAGE SIGNS MODEL 510

NO SCALE

ALL DIMENSIONS ARE IN MILLIMETERS UNLESS OTHERWISE SHOWN

S121

08-02-04

Back to Table of Contents

DIST	COUNTY	ROUTE	KILOMETER POST TOTAL PROJECT	SHEET NO.	TOTAL SHEETS

REGISTERED ~~CIVIL~~ ENGINEER

July 1, 2004
PLANS APPROVAL DATE

REGISTERED PROFESSIONAL ENGINEER
Tiliat Sattar
NO. C42892
Exp. 03-31-2006
CIVIL
STATE OF CALIFORNIA

The State of California or its officers or agents shall not be responsible for the accuracy or completeness of electronic copies of this plan sheet.

To get to the Caltrans web site, go to: http://www.dot.ca.gov

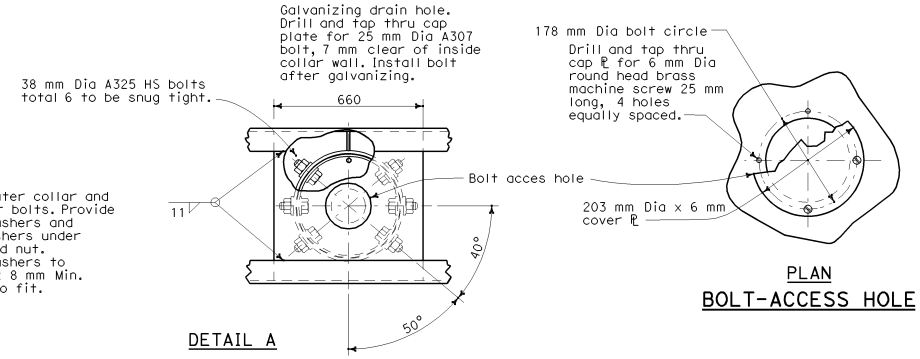

NOTE

Drill thru outer collar and post wall for bolts. Provide contoured washers and hardened washers under bolt head and nut. Contoured washers to be 76 x 76 x 8 mm Min. Grind face to fit.

DETAIL A

PLAN
BOLT-ACCESS HOLE

NOTE

Crossties at vertical and diagonal Ls and internal diagonals not shown for clarity.

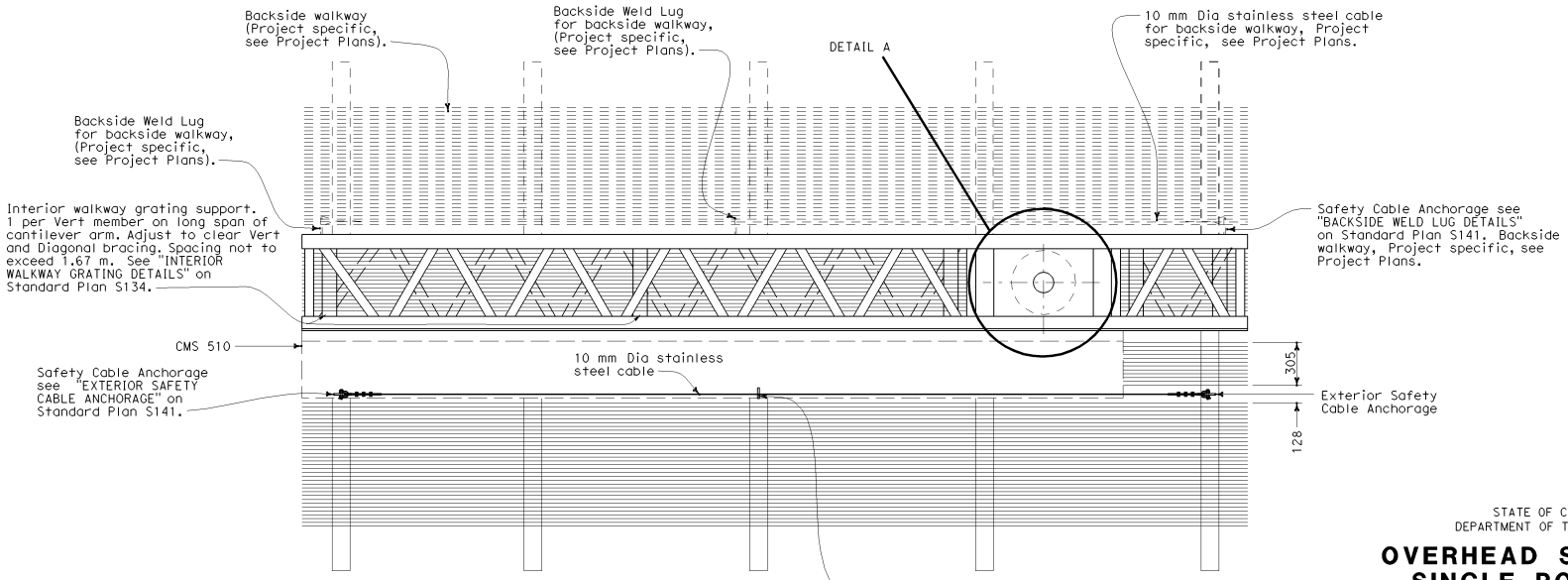

PLAN

STATE OF CALIFORNIA
DEPARTMENT OF TRANSPORTATION

OVERHEAD SIGN-TRUSS SINGLE POST TYPE PLAN AND UPPER BOLT DETAILS UNBALANCED BUTTERFLY CHANGEABLE MESSAGE SIGNS MODEL 510

NO SCALE

ALL DIMENSIONS ARE IN MILLIMETERS UNLESS OTHERWISE SHOWN

S122

08-02-04

Back to Table of Contents

DIST	COUNTY	ROUTE	KILOMETER POST TOTAL PROJECT	SHEET NO.	TOTAL SHEETS

REGISTERED CIVIL ENGINEER

July 1, 2004
PLANS APPROVAL DATE

REGISTERED PROFESSIONAL ENGINEER Tillat Sattar No. C42892 Exp. 03-31-2006 CIVIL STATE OF CALIFORNIA

The State of California or its officers or agents shall not be responsible for the accuracy or completeness of electronic copies of this plan sheet.

To get to the Caltrans web site, go to: http://www.dot.ca.gov

Caltrans Metric

NOTE

Lower juncture ℙ same thickness as corresponding cap ℙ

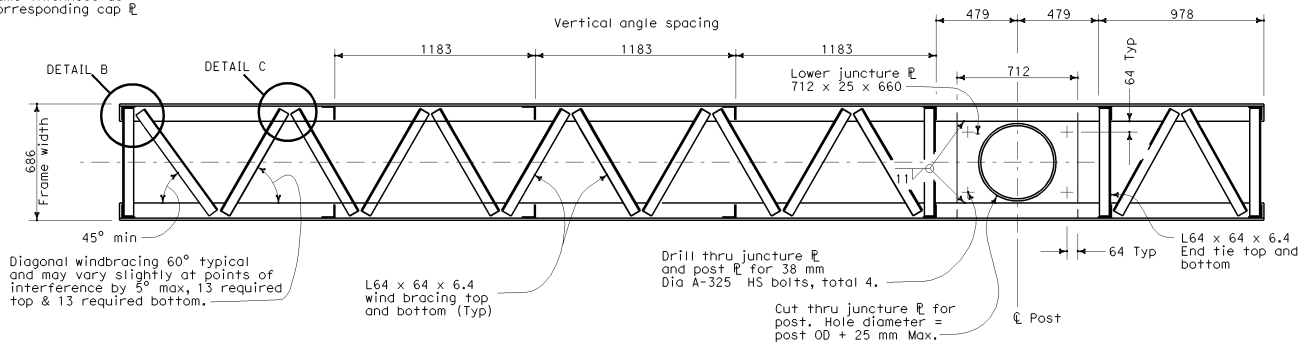

SECTION A-A
LOWER JUNCTURE CONNECTION

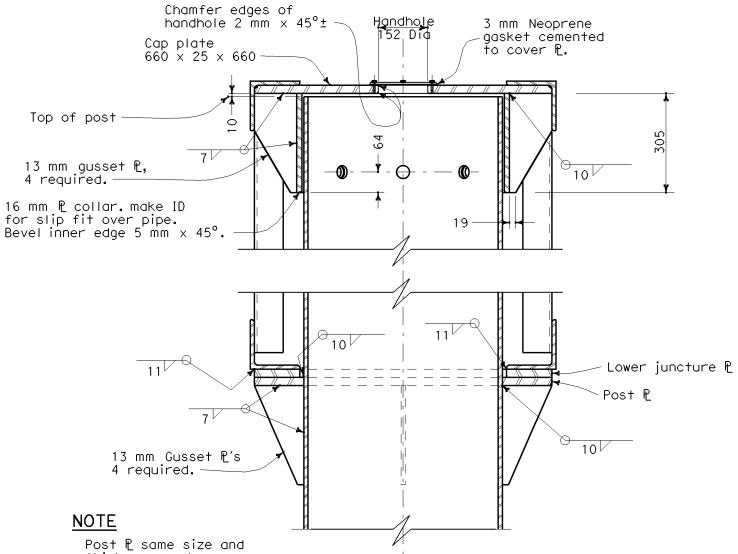

NOTE

Post ℙ same size and thickness as lower juncture plate. Cut for post OD + 2 mm Max and weld to post.

SECTION B-B

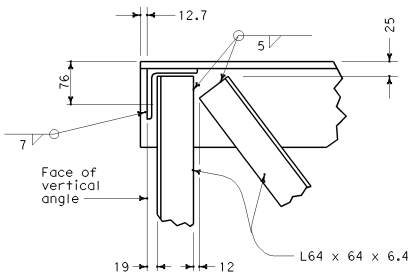

DETAIL B

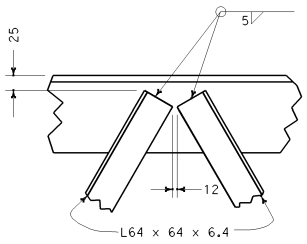

DETAIL C

NOTES

1. In all cases, truss shall be supported at lower juncture connection.
2. Post to truss connections shall be fitted in shop. Faying surfaces shall meet tolerances noted in contract documents.
3. For gussets parallel to the sign panel, cut to clear bolts as shown on Standard Plan S125.

STATE OF CALIFORNIA
DEPARTMENT OF TRANSPORTATION

OVERHEAD SIGN-TRUSS SINGLE POST TYPE FRAME JUNCTURE DETAILS UNBALANCED BUTTERFLY CHANGEABLE MESSAGE SIGNS MODEL 510

NO SCALE

ALL DIMENSIONS ARE IN MILLIMETERS UNLESS OTHERWISE SHOWN

S123

2004 Std PLAN S123

08-02-04

Back to Table of Contents

DIST	COUNTY	ROUTE	KILOMETER POST TOTAL PROJECT	SHEET NO.	TOTAL SHEETS

REGISTERED CIVIL ENGINEER

July 1, 2004
PLANS APPROVAL DATE

REGISTERED PROFESSIONAL ENGINEER
Tiliat Sattar
No. C42892
Exp. 03-31-2006
CIVIL
STATE OF CALIFORNIA

The State of California or its officers or agents shall not be responsible for the accuracy or completeness of electronic copies of this plan sheet.

To get to the Caltrans web site, go to: http://www.dot.ca.gov

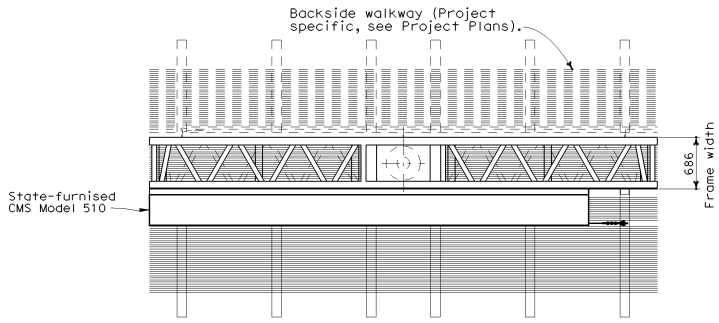

PLAN

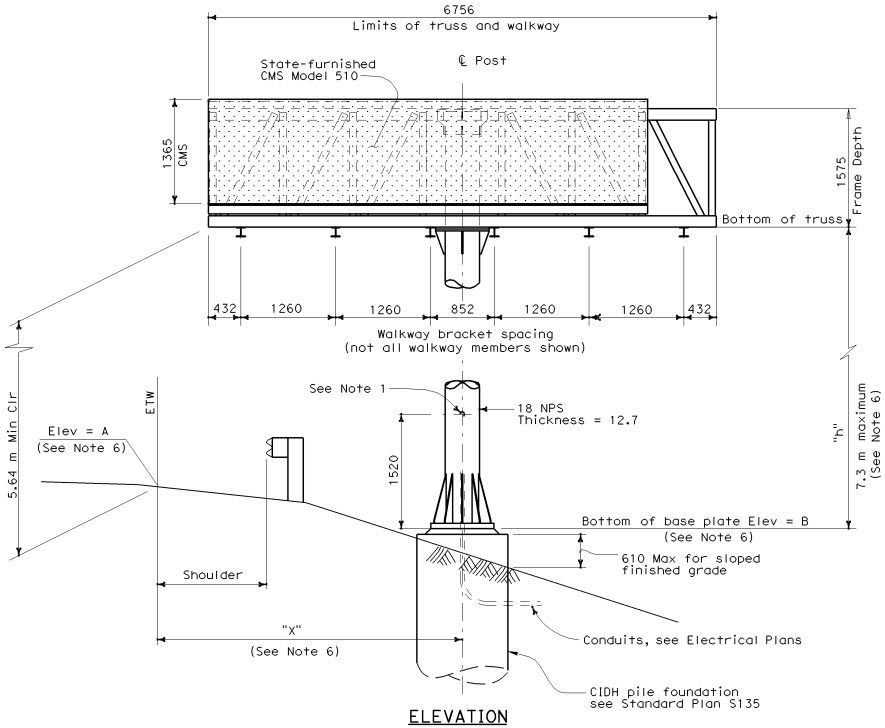

ELEVATION

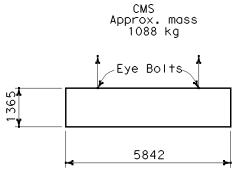

LIFTING DIAGRAM

NOTES

1. Drill and tap for Size 63 recessed pipe plug.
2. Changeable Message Sign will be State-furnished.
3. For location and elevation of sign structure see Project Plans.
4. Sign support post shall be raked out of plumb with leveling nuts to make the bottom of the sign frame level.
5. At final position of post top and bottom nuts shall be tightened against base plate.
6. See Project Plans.

STATE OF CALIFORNIA
DEPARTMENT OF TRANSPORTATION

OVERHEAD SIGN-TRUSS SINGLE POST TYPE LAYOUT BALANCED BUTTERFLY CHANGEABLE MESSAGE SIGNS MODEL 510

NO SCALE

ALL DIMENSIONS ARE IN MILLIMETERS UNLESS OTHERWISE SHOWN

S124

08-05-04

Back to Table of Contents

DIST	COUNTY	ROUTE	KILOMETER POST TOTAL PROJECT	SHEET NO.	TOTAL SHEETS

REGISTERED CIVIL ENGINEER

July 1, 2004
PLANS APPROVAL DATE

REGISTERED PROFESSIONAL ENGINEER Tillat Sattar No. C42892 Exp. 03-31-2006 CIVIL STATE OF CALIFORNIA

The State of California or its officers or agents shall not be responsible for the accuracy or completeness of electronic copies of this plan sheet.

To get to the Caltrans web site, go to: http://www.dot.ca.gov

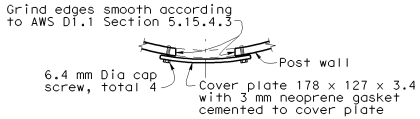

PLAN

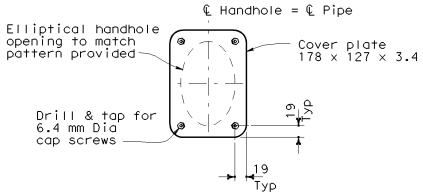

ELEVATION

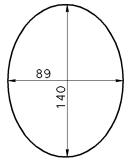

PATTERN OF ELLIPTICAL HANDHOLE CUT OUT

UPPER HANDHOLE & COVER DETAILS

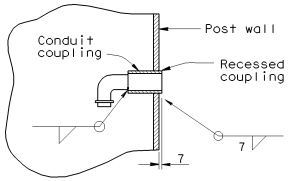

RECESSED COUPLING DETAIL

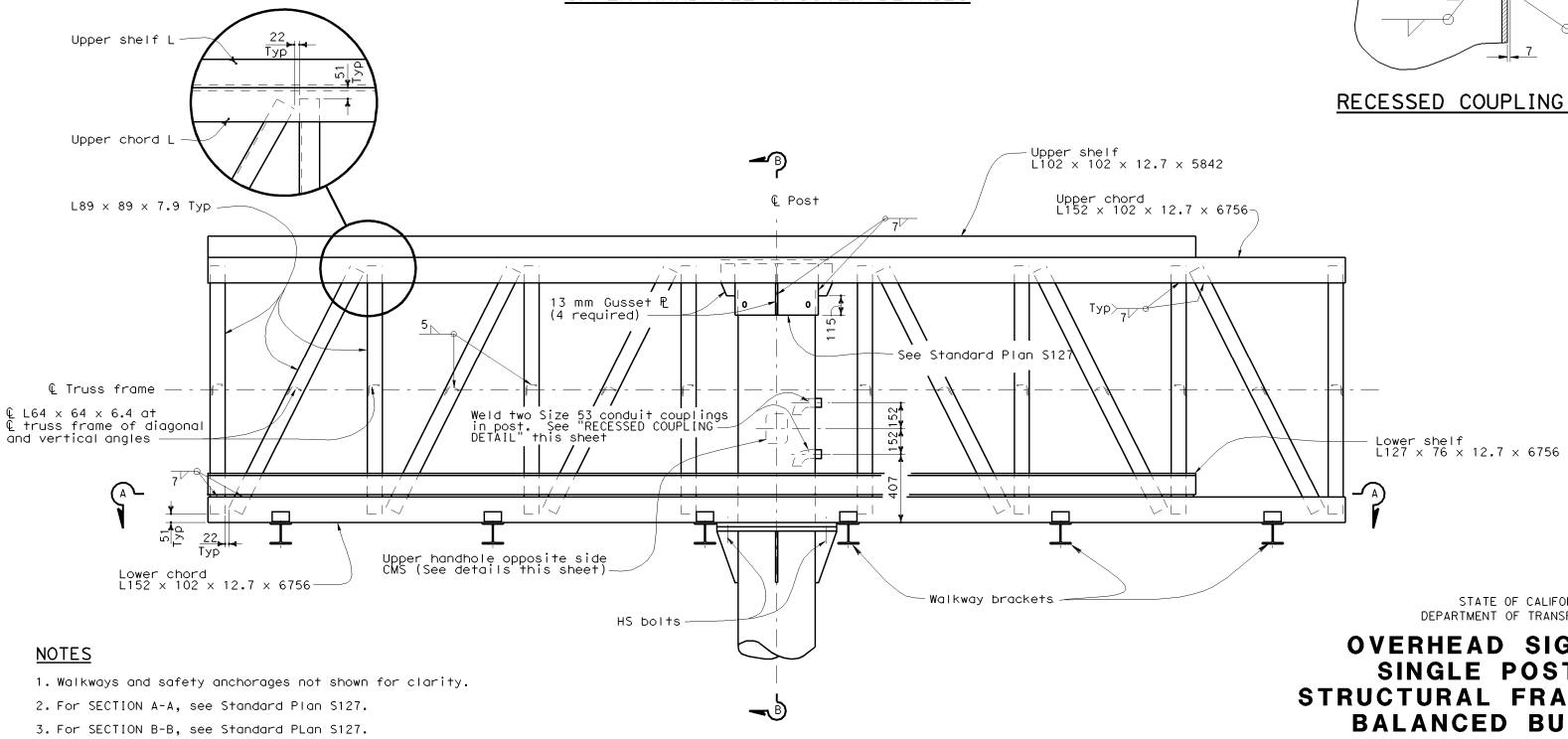

FRAME ELEVATION

See Note 1

NOTES

1. Walkways and safety anchorages not shown for clarity.
2. For SECTION A-A, see Standard Plan S127.
3. For SECTION B-B, see Standard PLan S127.

STATE OF CALIFORNIA
DEPARTMENT OF TRANSPORTATION

OVERHEAD SIGN-TRUSS SINGLE POST TYPE STRUCTURAL FRAME DETAILS BALANCED BUTTERFLY CHANGEABLE MESSAGE SIGNS MODEL 510

NO SCALE

ALL DIMENSIONS ARE IN MILLIMETERS UNLESS OTHERWISE SHOWN

S125

08-02-04

2004 Std PLAN S125

Back to Table of Contents

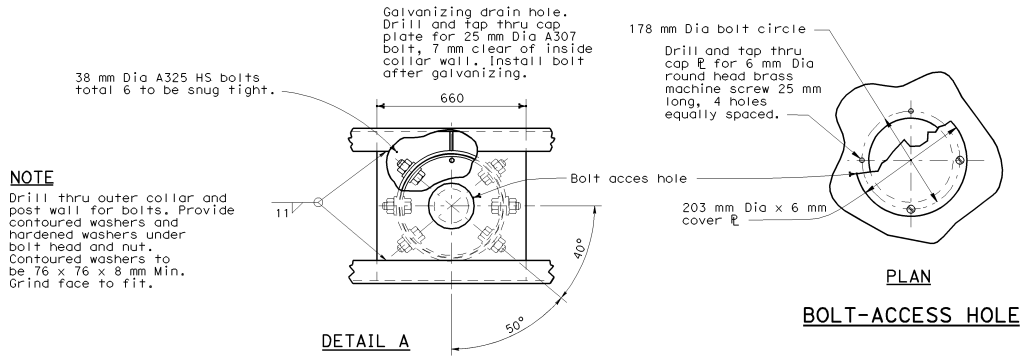

NOTE

Drill thru outer collar and post wall for bolts. Provide contoured washers and hardened washers under bolt head and nut. Contoured washers to be 76 x 76 x 8 mm Min. Grind face to fit.

DETAIL A

PLAN

BOLT-ACCESS HOLE

Caltrans Metric

DIST	COUNTY	ROUTE	KILOMETER POST TOTAL PROJECT	SHEET NO.	TOTAL SHEETS

REGISTERED CIVIL ENGINEER

July 1, 2004
PLANS APPROVAL DATE

REGISTERED PROFESSIONAL ENGINEER Tiliat Sattar NO. C42892 Exp. 03-31-2006 CIVIL STATE OF CALIFORNIA

The State of California or its officers or agents shall not be responsible for the accuracy or completeness of electronic copies of this plan sheet.

To get to the Caltrans web site, go to: http://www.dot.ca.gov

NOTE

Crossties at vertical and diagonal Ls and internal diagonals not shown for clarity.

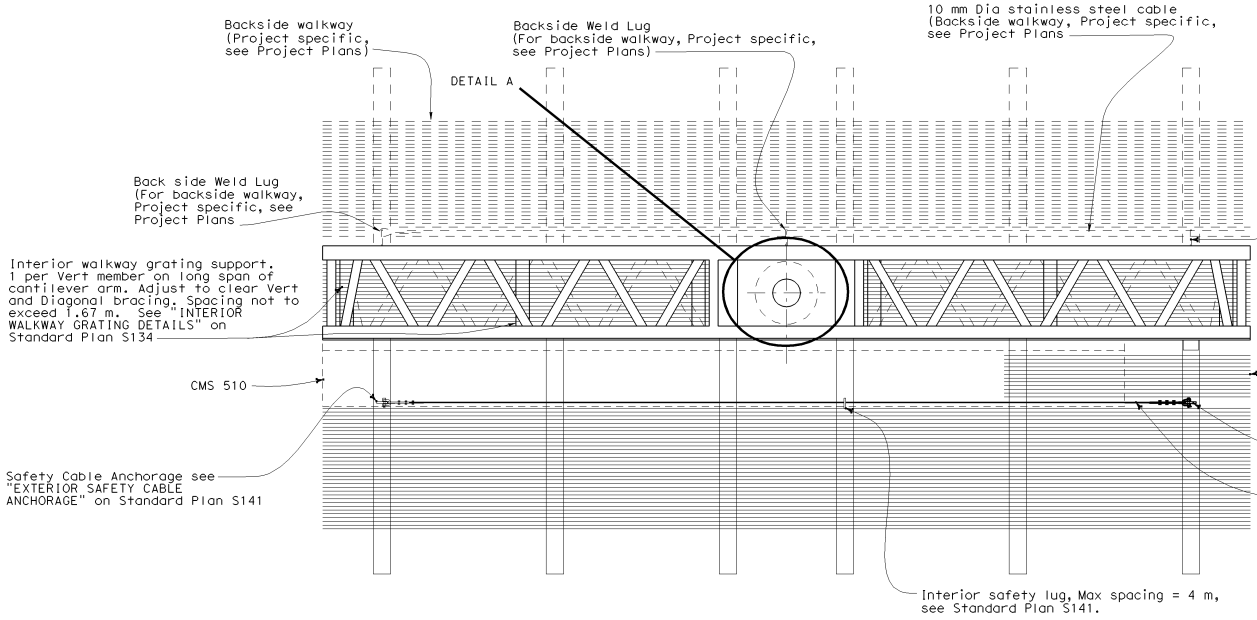

PLAN

STATE OF CALIFORNIA
DEPARTMENT OF TRANSPORTATION

OVERHEAD SIGN-TRUSS SINGLE POST TYPE PLAN AND UPPER BOLT DETAILS BALANCED BUTTERFLY CHANGEABLE MESSAGE SIGNS MODEL 510

NO SCALE

ALL DIMENSIONS ARE IN MILLIMETERS UNLESS OTHERWISE SHOWN

S126

08-02-04

Back to Table of Contents

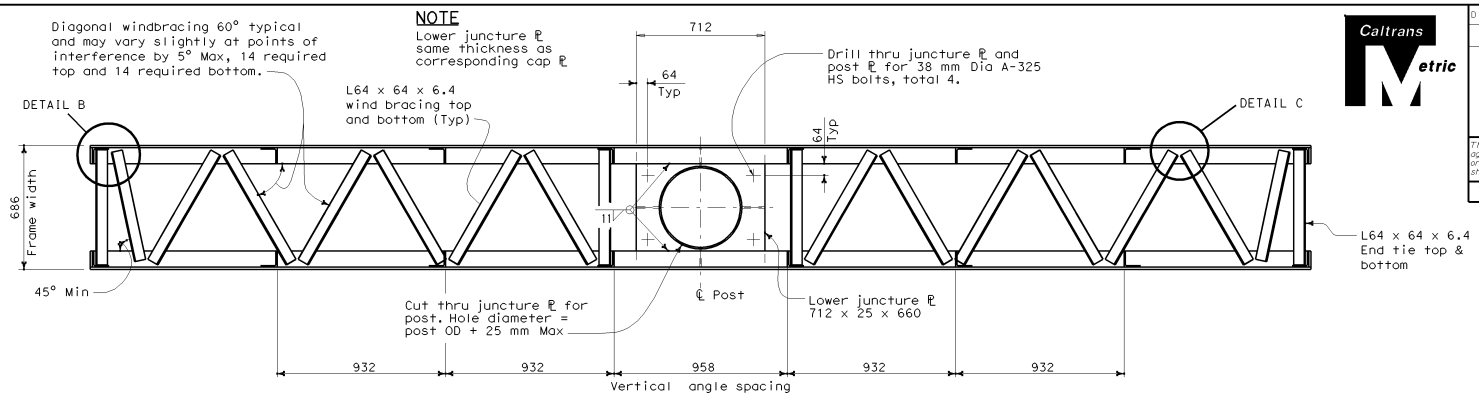

SECTION A-A

LOWER JUNCTURE CONNECTION

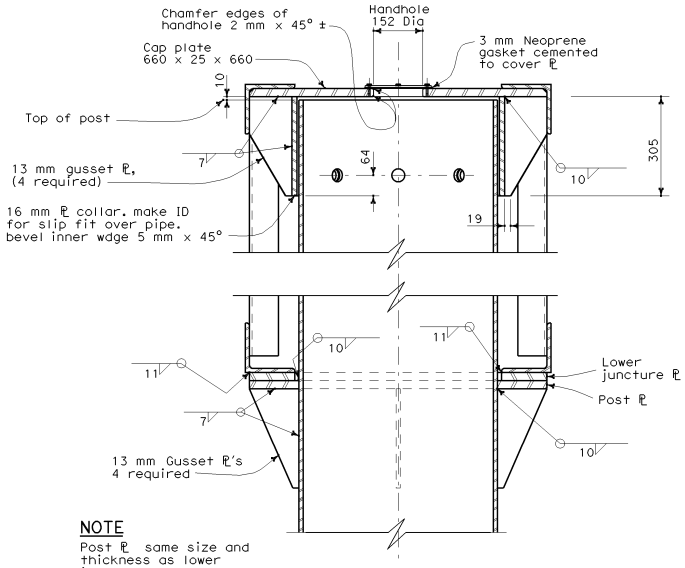

NOTE

Post ℞ same size and thickness as lower juncture plate. Cut for post OD + 2 mm Max and weld to post

SECTION B-B

NOTES

1. In all cases, truss shall be supported at lower juncture connection.
2. Post to truss connections shall be fitted in shop. Faying surfaces shall meet tolerances noted in contract documents.
3. For gussets parallel to the sign panel, cut to clear bolts as shown on Standard Plan S125

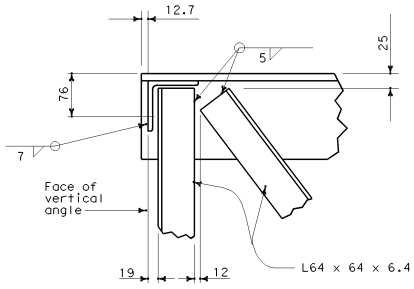

DETAIL B

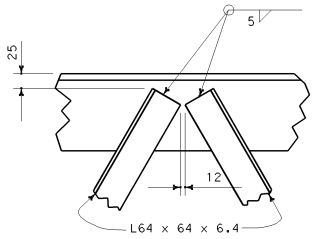

DETAIL C

DIST	COUNTY	ROUTE	KILOMETER POST TOTAL PROJECT	SHEET NO.	TOTAL SHEETS

REGISTERED CIVIL ENGINEER

July 1, 2004
PLANS APPROVAL DATE

REGISTERED PROFESSIONAL ENGINEER Tiilat Sattar No. C42892 Exp. 03-31-2006 CIVIL STATE OF CALIFORNIA

The State of California or its officers or agents shall not be responsible for the accuracy or completeness of electronic copies of this plan sheet.

To get to the Caltrans web site, go to: http://www.dot.ca.gov

STATE OF CALIFORNIA
DEPARTMENT OF TRANSPORTATION

OVERHEAD SIGN-TRUSS SINGLE POST TYPE FRAME JUNCTURE DETAILS BALANCED BUTTERFLY CHANGEABLE MESSAGE SIGNS MODEL 510

NO SCALE

ALL DIMENSIONS ARE IN MILLIMETERS UNLESS OTHERWISE SHOWN

S127

08-02-04

Back to Table of Contents

DIST	COUNTY	ROUTE	KILOMETER POST TOTAL PROJECT	SHEET NO.	TOTAL SHEETS

REGISTERED ~~CIVIL~~ ENGINEER

July 1, 2004
PLANS APPROVAL DATE

REGISTERED PROFESSIONAL ENGINEER
Tiliat Sattar
NO. C42892
Exp. 03-31-2006
CIVIL
STATE OF CALIFORNIA

The State of California or its officers or agents shall not be responsible for the accuracy or completeness of electronic copies of this plan sheet.

To get to the Caltrans web site, go to: http://www.dot.ca.gov

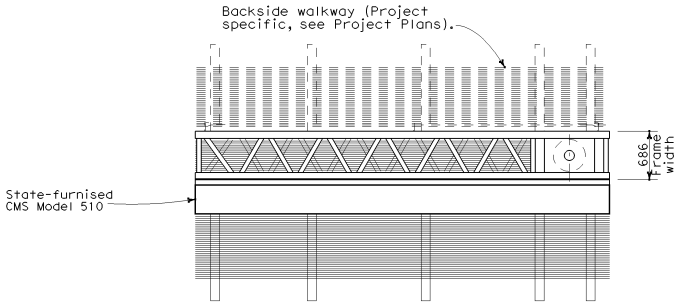

PLAN

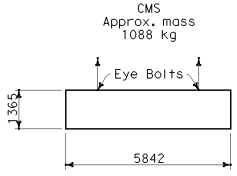

LIFTING DIAGRAM

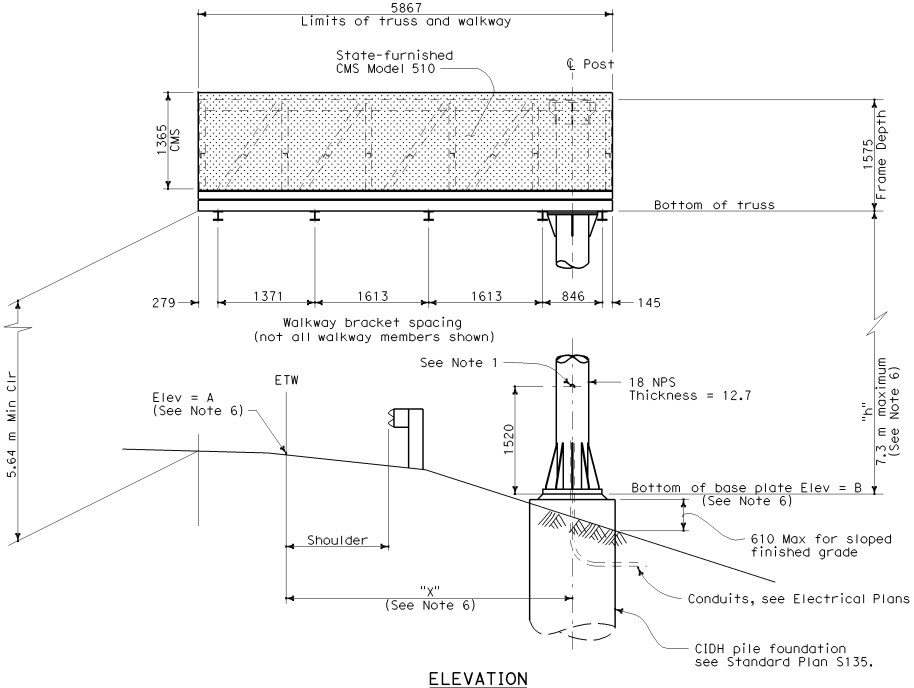

ELEVATION

NOTES

1. Drill and tap for Size 63 recessed pipe plug.
2. Changeable Message Sign will be State-furnished.
3. For location and elevation of sign structure see Project Plans.
4. Sign support post shall be raked out of plumb with leveling nuts to make the bottom of the sign frame level.
5. At final position of post top and bottom nuts shall be tightened against base plate.
6. See Project Plans.

STATE OF CALIFORNIA
DEPARTMENT OF TRANSPORTATION

OVERHEAD SIGN-TRUSS SINGLE POST TYPE LAYOUT FULL CANTILEVER CHANGEABLE MESSAGE SIGNS MODEL 510

NO SCALE

ALL DIMENSIONS ARE IN MILLIMETERS UNLESS OTHERWISE SHOWN

S128

08-05-04

Back to Table of Contents

DIST	COUNTY	ROUTE	KILOMETER POST TOTAL PROJECT	SHEET NO.	TOTAL SHEETS

Caltrans Metric

REGISTERED CIVIL ENGINEER

July 1, 2004
PLANS APPROVAL DATE

REGISTERED PROFESSIONAL ENGINEER Tillat Sattar No. C42892 Exp. 03-31-2006 CIVIL STATE OF CALIFORNIA

The State of California or its officers or agents shall not be responsible for the accuracy or completeness of electronic copies of this plan sheet.

To get to the Caltrans web site, go to: http://www.dot.ca.gov

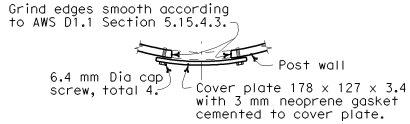

PLAN

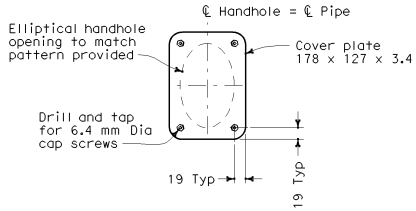

ELEVATION

UPPER HANDHOLE AND COVER DETAILS

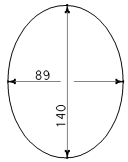

PATTERN OF ELLIPTICAL HANDHOLE CUT OUT

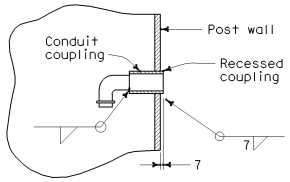

RECESSED COUPLING DETAIL

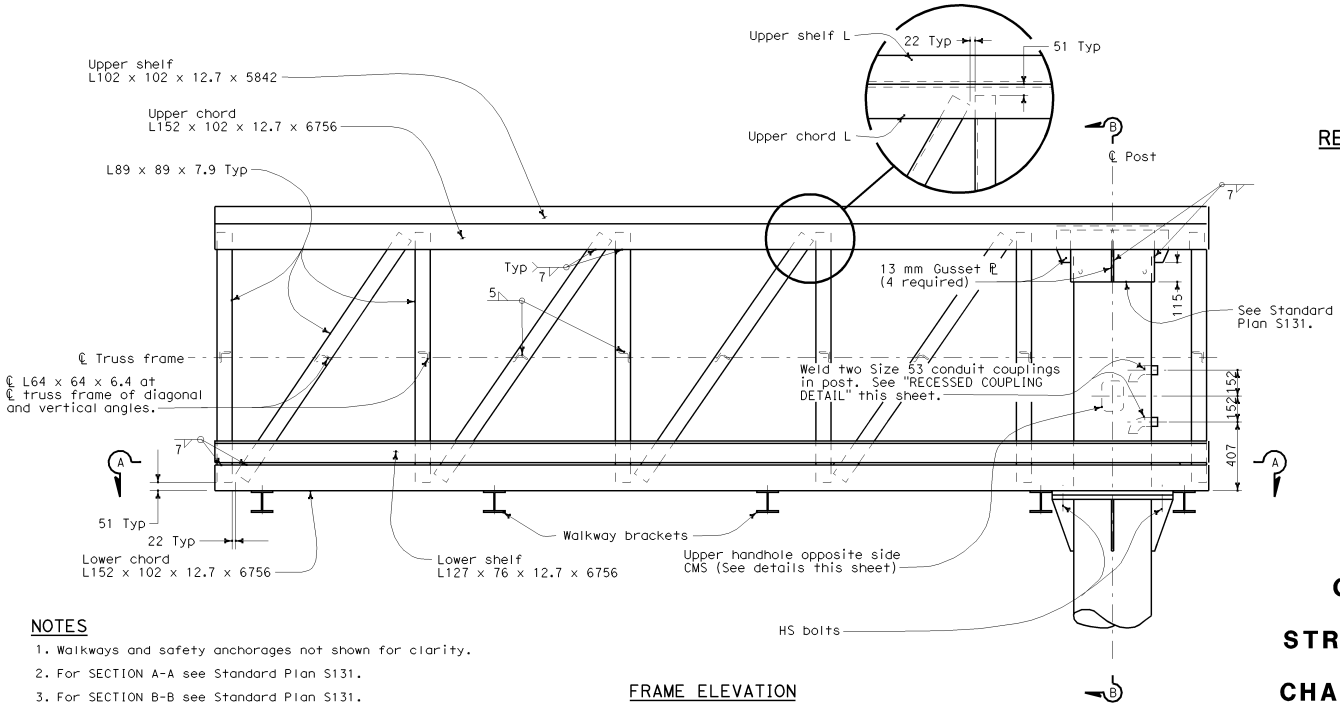

FRAME ELEVATION

See Note 1

NOTES

1. Walkways and safety anchorages not shown for clarity.
2. For SECTION A-A see Standard Plan S131.
3. For SECTION B-B see Standard Plan S131.

STATE OF CALIFORNIA
DEPARTMENT OF TRANSPORTATION

OVERHEAD SIGN-TRUSS SINGLE POST TYPE STRUCTURAL FRAME DETAILS FULL CANTILEVER CHANGEABLE MESSAGE SIGNS MODEL 510

NO SCALE

ALL DIMENSIONS ARE IN MILLIMETERS UNLESS OTHERWISE SHOWN

S129

08-02-04

Back to Table of Contents

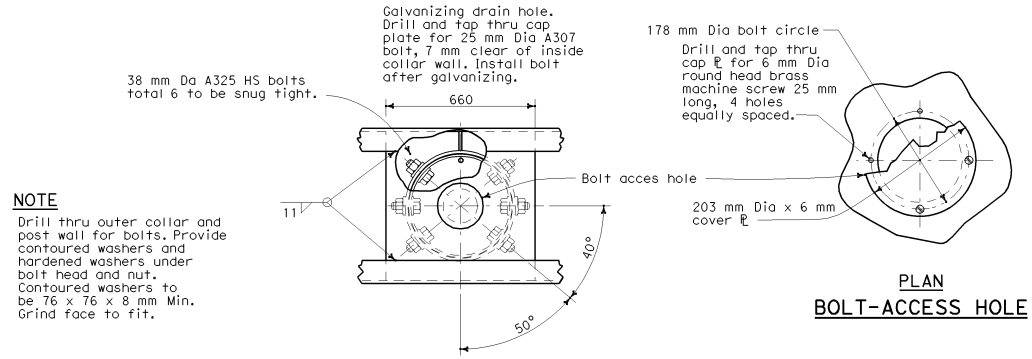

NOTE

Drill thru outer collar and post wall for bolts. Provide contoured washers and hardened washers under bolt head and nut. Contoured washers to be 76 x 76 x 8 mm Min. Grind face to fit.

DETAIL A

PLAN

BOLT-ACCESS HOLE

NOTE

Crossties at vertical and diagonal Ls and internal diagonals not shown for clarity.

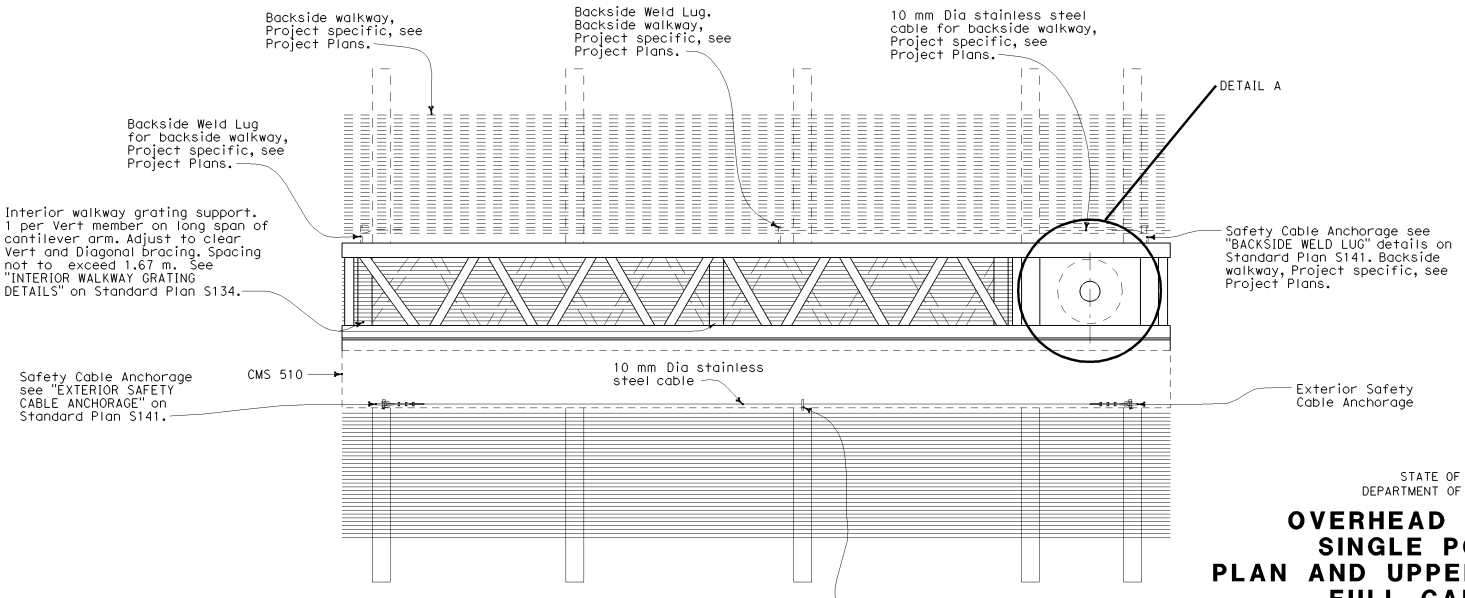

PLAN

Caltrans Metric

DIST	COUNTY	ROUTE	KILOMETER POST TOTAL PROJECT	SHEET NO.	TOTAL SHEETS

REGISTERED CIVIL ENGINEER

July 1, 2004
PLANS APPROVAL DATE

REGISTERED PROFESSIONAL ENGINEER Tiliat Sattar NO. C42892 Exp. 03-31-2006 CIVIL STATE OF CALIFORNIA

The State of California or its officers or agents shall not be responsible for the accuracy or completeness of electronic copies of this plan sheet.

To get to the Caltrans web site, go to: http://www.dot.ca.gov

STATE OF CALIFORNIA
DEPARTMENT OF TRANSPORTATION

OVERHEAD SIGN-TRUSS SINGLE POST TYPE PLAN AND UPPER BOLT DETAILS FULL CANTILEVER CHANGEABLE MESSAGE SIGNS MODEL 510

NO SCALE

ALL DIMENSIONS ARE IN MILLIMETERS UNLESS OTHERWISE SHOWN

S130

08-02-04

Back to Table of Contents

DIST	COUNTY	ROUTE	KILOMETER POST TOTAL PROJECT	SHEET NO.	TOTAL SHEETS

REGISTERED CIVIL ENGINEER

July 1, 2004
PLANS APPROVAL DATE

REGISTERED PROFESSIONAL ENGINEER Tillat Sattar No. C42892 Exp. 03-31-2006 CIVIL STATE OF CALIFORNIA

The State of California or its officers or agents shall not be responsible for the accuracy or completeness of electronic copies of this plan sheet.

To get to the Caltrans web site, go to: http://www.dot.ca.gov

Caltrans Metric

NOTE
Lower juncture ℄ same thickness as corresponding cap ℄

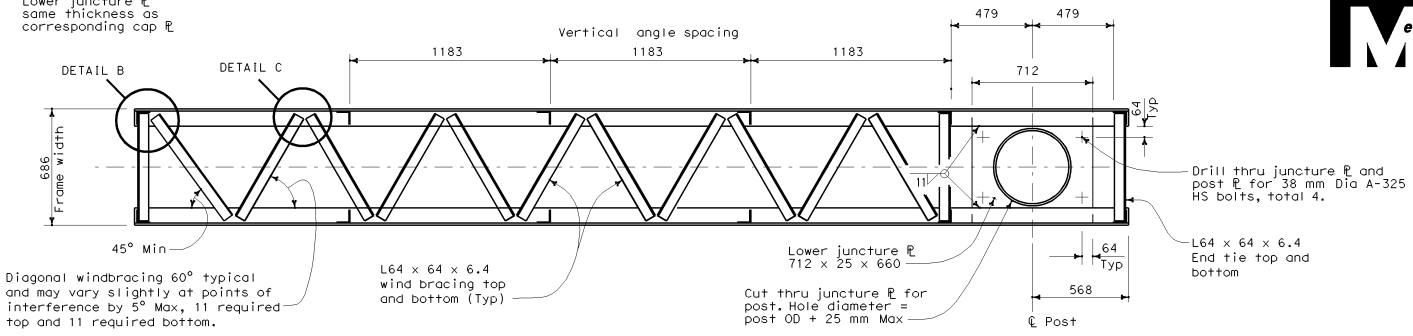

SECTION A-A

LOWER JUNCTURE CONNECTION

NOTES

1. In all cases, truss shall be supported at lower juncture connection.
2. Post to truss connections shall be fitted in shop. Faying surfaces shall meet tolerances noted in contract documents.
3. For gussets parallel to the sign panel, cut to clear bolts as shown on Standard Plan S129.

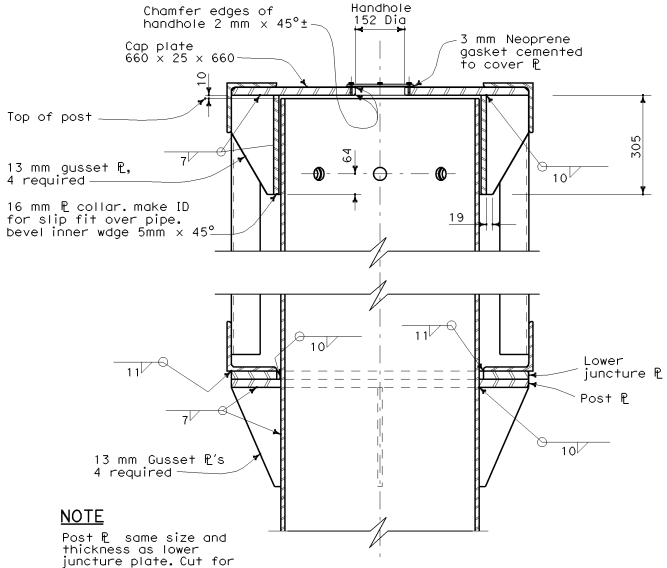

NOTE
Post ℄ same size and thickness as lower juncture plate. Cut for post OD + 2 mm Max and weld to post

SECTION B-B

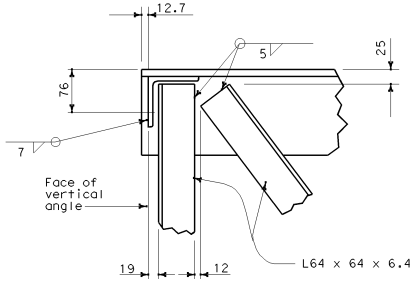

DETAIL B

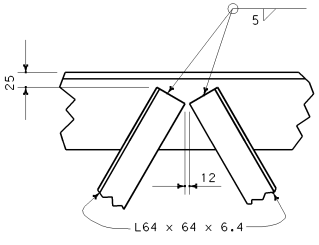

DETAIL C

STATE OF CALIFORNIA
DEPARTMENT OF TRANSPORTATION

OVERHEAD SIGN-TRUSS SINGLE POST TYPE FRAME JUNCTURE DETAILS FULL CANTILEVER CHANGEABLE MESSAGE SIGNS MODEL 510

NO SCALE

ALL DIMENSIONS ARE IN MILLIMETERS UNLESS OTHERWISE SHOWN

S131

06-25-04

Back to Table of Contents

DIST	COUNTY	ROUTE	KILOMETER POST TOTAL PROJECT	SHEET NO.	TOTAL SHEETS

REGISTERED CIVIL ENGINEER

July 1, 2004
PLANS APPROVAL DATE

REGISTERED PROFESSIONAL ENGINEER
Tiliat Sattar
No. C42892
Exp. 03-31-2006
CIVIL
STATE OF CALIFORNIA

The State of California or its officers or agents shall not be responsible for the accuracy or completeness of electronic copies of this plan sheet.

To get to the Caltrans web site, go to: http://www.dot.ca.gov

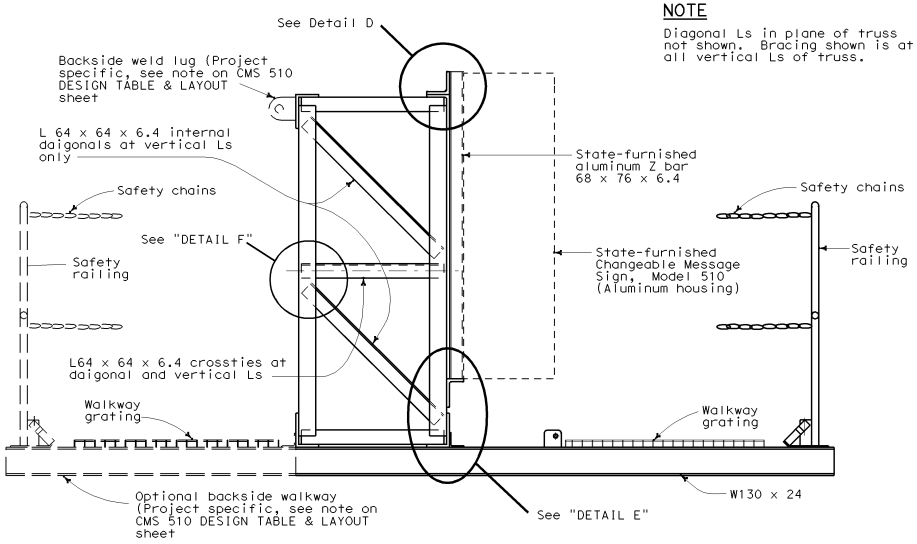

NOTE
Diagonal Ls in plane of truss not shown. Bracing shown is at all vertical Ls of truss.

NOTE
Internal walkway members not shown

TYPICAL FRAME SECTION

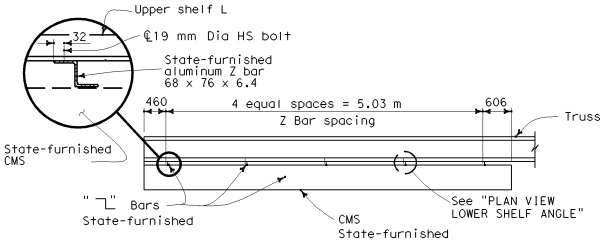

ALUMINUM Z BAR SPACING

NOTE
Z bar spacing and orientation may vary slightly.

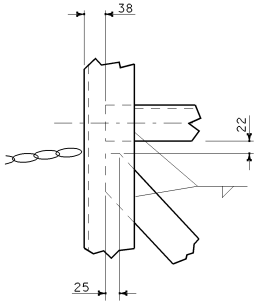

DETAIL F

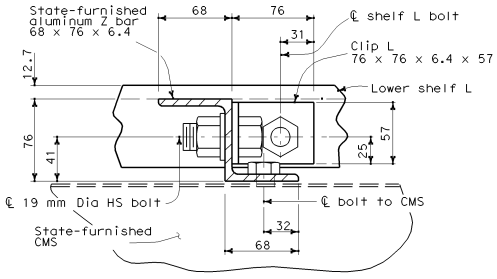

PLAN VIEW LOWER SHELF ANGLE

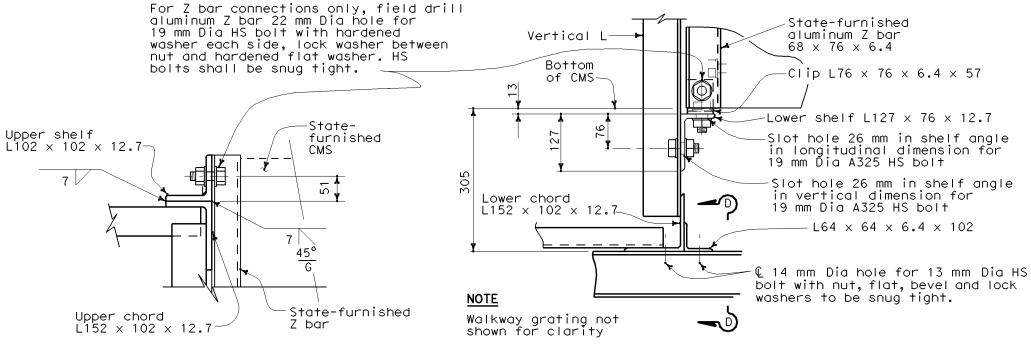

NOTE
Walkway grating not shown for clarity

DETAIL D

DETAIL E

STATE OF CALIFORNIA
DEPARTMENT OF TRANSPORTATION

OVERHEAD SIGN-TRUSS SINGLE POST TYPE MOUNTING DETAILS CHANGEABLE MESSAGE SIGNS MODEL 510

NO SCALE

ALL DIMENSIONS ARE IN MILLIMETERS UNLESS OTHERWISE SHOWN

S132

08-02-04

Back to Table of Contents

Caltrans Metric

DIST	COUNTY	ROUTE	KILOMETER POST TOTAL PROJECT	SHEET NO.	TOTAL SHEETS

REGISTERED ~~CIVIL~~ ENGINEER

July 1, 2004
PLANS APPROVAL DATE

REGISTERED PROFESSIONAL ENGINEER Tillat Sattar No. C42892 Exp. 03-31-2006 CIVIL STATE OF CALIFORNIA

The State of California or its officers or agents shall not be responsible for the accuracy or completeness of electronic copies of this plan sheet.

To get to the Caltrans web site, go to: http://www.dot.ca.gov

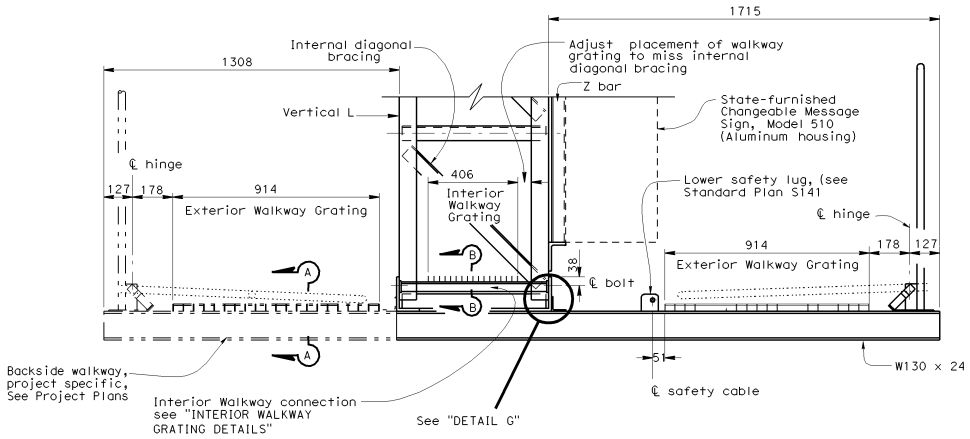

TYPICAL WALKWAY SECTION

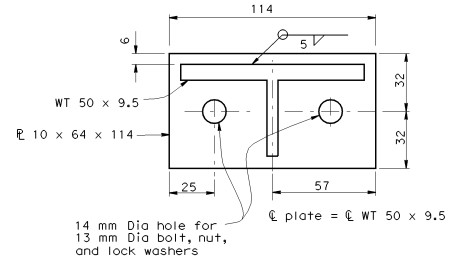

END PLATE CONNECTOR DETAIL

NOTES

1. Welded type grating shall have 32 x 3 bearing bars at 30 centers with 6 mm diameter (or equal) cross bars at 102 mm centers. If mechanical lock grating is used, it shall be equal in strength to the welded type. Alternative hold-down clips may be submitted for approval.
2. Walkway grating to be continuous (no splices) over as many walkway brackets as practicable consistent with fabrication, ease of handling and assembly.

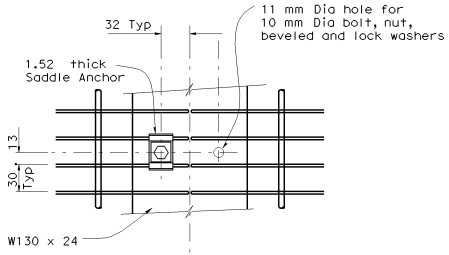

PLAN

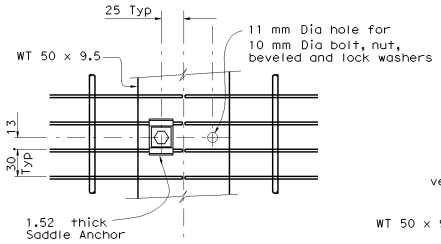

PLAN

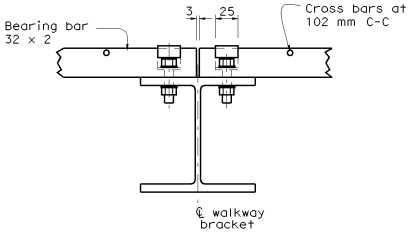

SECTION A-A
EXTERIOR WALKWAY GRATING DETAILS
Shown at splice

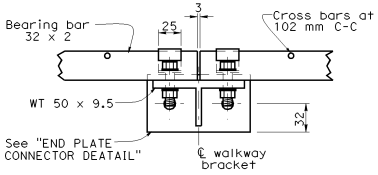

SECTION B-B
INTERIOR WALKWAY GRATING DETAILS
Shown at splice

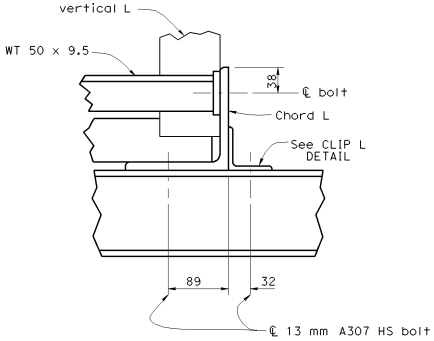

DETAIL G

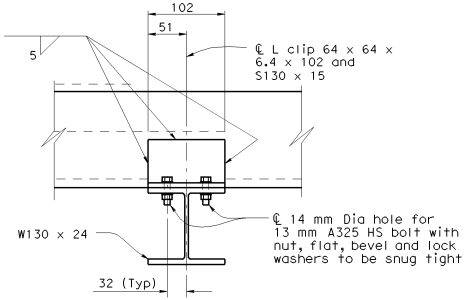

CLIP L DETAIL

STATE OF CALIFORNIA
DEPARTMENT OF TRANSPORTATION

OVERHEAD SIGN-TRUSS SINGLE POST TYPE WALKWAY DETAILS CHANGEABLE MESSAGE SIGNS MODEL 510

NO SCALE

ALL DIMENSIONS ARE IN MILLIMETERS UNLESS OTHERWISE SHOWN

S133

08-02-04

Back to Table of Contents

Caltrans Metric

DIST	COUNTY	ROUTE	KILOMETER POST TOTAL PROJECT	SHEET NO.	TOTAL SHEETS

REGISTERED CIVIL ENGINEER

July 1, 2004
PLANS APPROVAL DATE

REGISTERED PROFESSIONAL ENGINEER Tiliat Sattar No. C42892 Exp. 03-31-2006 CIVIL STATE OF CALIFORNIA

The State of California or its officers or agents shall not be responsible for the accuracy or completeness of electronic copies of this plan sheet.

To get to the Caltrans web site, go to: http://www.dot.ca.gov

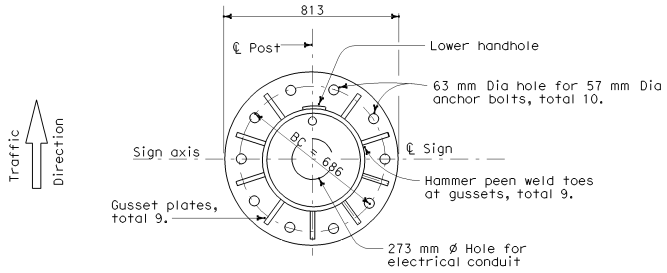

10 BOLTS
BASE PLATE DETAILS

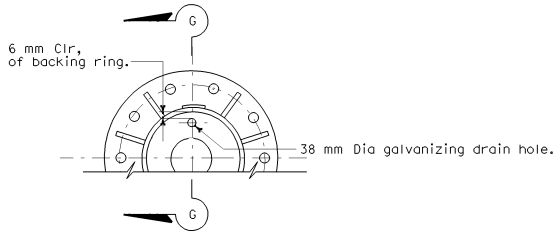

GALVANIZING HOLE LAYOUT

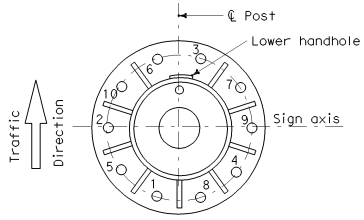

TIGHTENING SEQUENCE

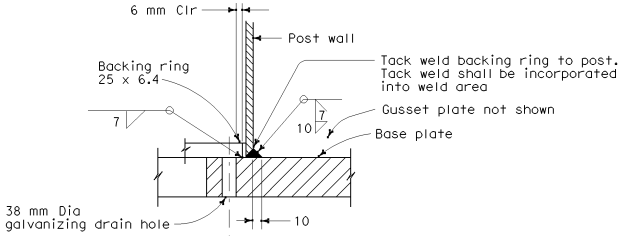

SECTION G-G
WELDING DETAIL

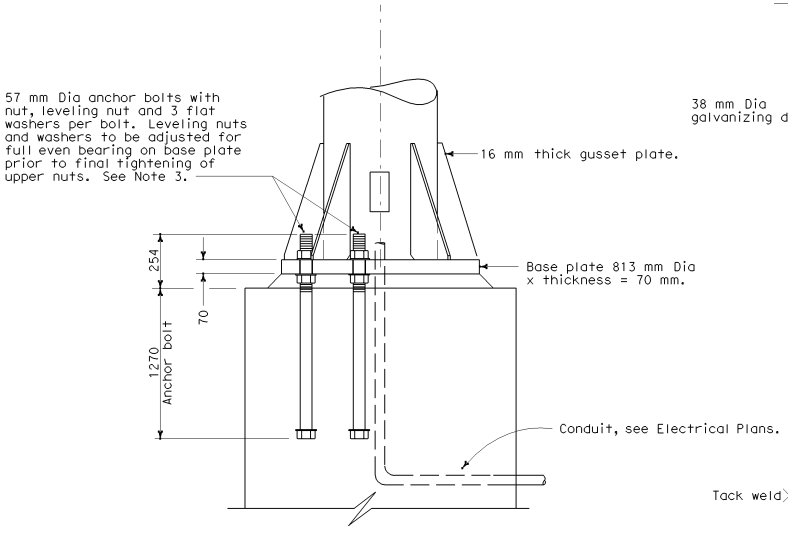

ELEVATION

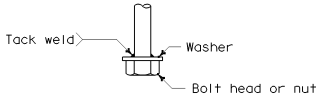

ANCHORAGE DETAIL

NOTES

1. Thread upper 254 mm and galvanize upper 305 mm of the anchor bolts.
2. Provide bolt template during installation of anchor bolts.
3. Following initial tightening, upper nuts shall be brought to a snug tight condition. This can be obtained by a few impacts of an impact wrench or the full effort of a man using an ordinary spud wrench. Snug tightening shall progress systematically according to the tightening sequence as shown. Upper nuts and washers to have full even bearing on base plate.

STATE OF CALIFORNIA
DEPARTMENT OF TRANSPORTATION

OVERHEAD SIGN-TRUSS SINGLE POST TYPE ANCHORAGE AND BASE PLATE DETAILS CHANGEABLE MESSAGE SIGNS MODEL 510

NO SCALE

ALL DIMENSIONS ARE IN MILLIMETERS UNLESS OTHERWISE SHOWN

S134

08-05-04

Back to Table of Contents

DIST	COUNTY	ROUTE	KILOMETER POST TOTAL PROJECT	SHEET NO.	TOTAL SHEETS

REGISTERED CIVIL ENGINEER

July 1, 2004
PLANS APPROVAL DATE

REGISTERED PROFESSIONAL ENGINEER Tiliat Sattar No. C42892 Exp. 03-31-2006 CIVIL STATE OF CALIFORNIA

The State of California or its officers or agents shall not be responsible for the accuracy or completeness of electronic copies of this plan sheet.

To get to the Caltrans web site, go to: http://www.dot.ca.gov

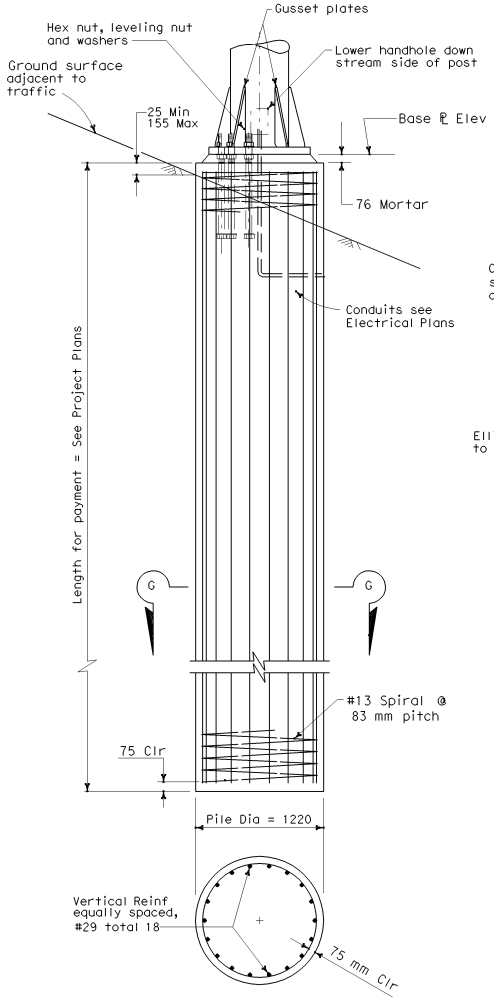

SECTION G-G

CIDH PILE FOUNDATION DETAILS

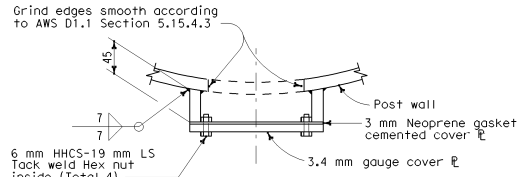

PLAN

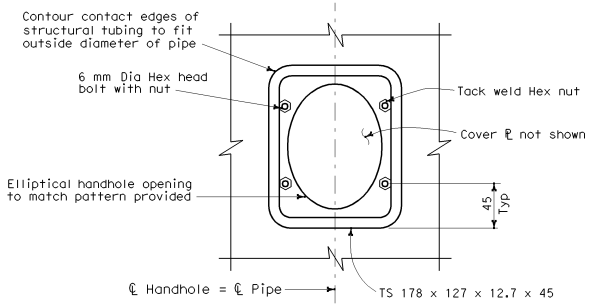

ELEVATION

DETAILS OF LOWER HANDHOLE AND COVER

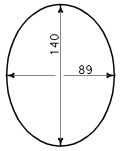

PATTERN OF ELLIPTICAL HANDHOLE CUT OUT

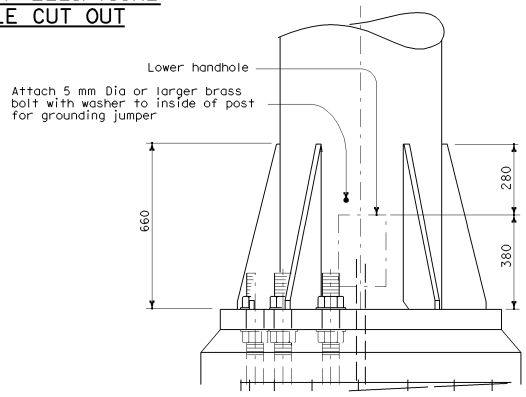

POST BASE ELEVATION

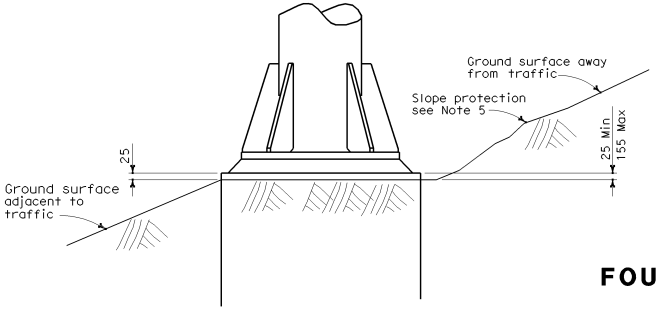

DETAIL J

NOTES

1. Pile shall be placed against undisturbed material.
2. Primer and paint post interior from base plate to 150 mm above lower handhole-unless post is galvanized.
3. On single post sign structures, the post shall be raked out of plumb, with the use of leveling nuts to make the bottom of the sign frame level.
4. When foundation is located on a steep slope with exposed face of concrete adjacent to traffic, see "DETAIL J".
5. Slope protection required when indicated on Project Plans.
6. Foundation design is based on 2001 AASHTO Article 13.6, assuming a cohesionless material. The angle of shearing resistance Ø used is 30°. The unit weight of soil used is 1922 kg/m³.

STATE OF CALIFORNIA
DEPARTMENT OF TRANSPORTATION

OVERHEAD SIGN-TRUSS SINGLE POST TYPE FOUNDATION AND MISCELLANEOUS DETAILS CHANGEABLE MESSAGE SIGNS MODEL 510

NO SCALE

ALL DIMENSIONS ARE IN MILLIMETERS UNLESS OTHERWISE SHOWN

S135

08-05-04

Back to Table of Contents

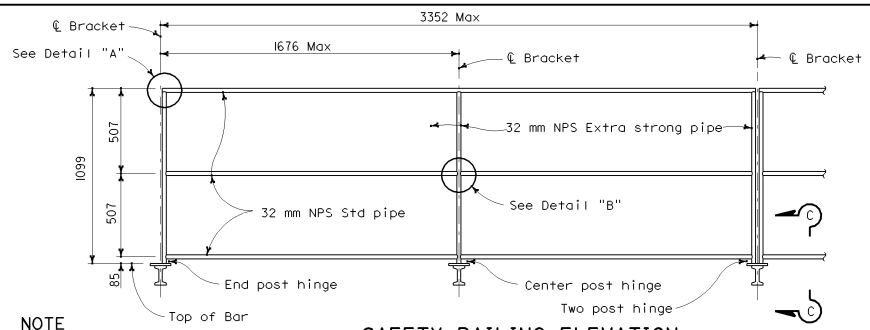

NOTE
Chain assembly behind (see detail this page)

SAFETY RAILING ELEVATION

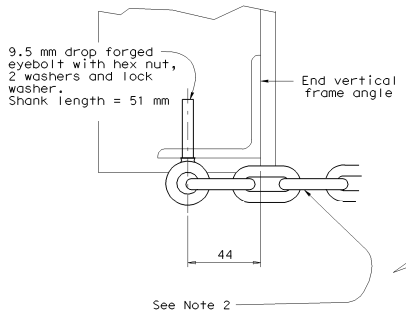

NOTE
See Standard Plan S101, S105 and S109 for walkway bracket spacing.

SECTION D-D

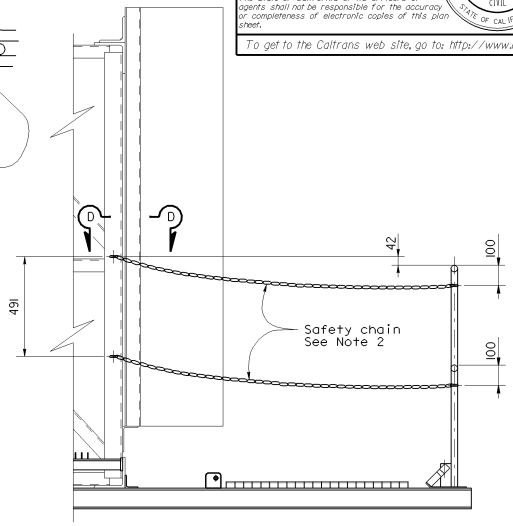

CHAIN ASSEMBLY

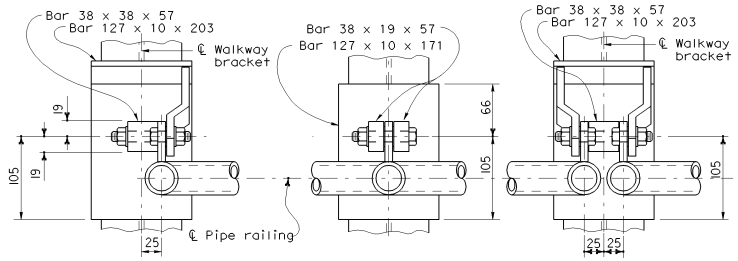

END POST CENTER POST TWO POST

WELDED HINGE - PLAN

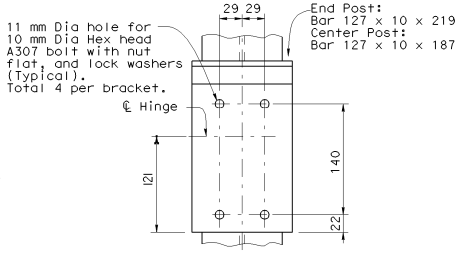

TYPICAL BOLTED (ALTERNATIVE)
HINGED CONNECTION

NOTES
1. Special care shall be taken to insure that the complete hinge and latch assembly will hold the safety railing in a steady manner, free of wobble while in the raised position. Maximum allowable displacement from vertical at top of railing when latched shall be 25 mm.
2. Safety chain shall be 5.0 mm galvanized steel coil chain, approximately 39.4 links per meter. Length shall be minimum which allows lock-up of safety railing. Minimum of two safety chains per safety railing.

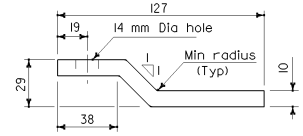

PLAN - KICKER BAR

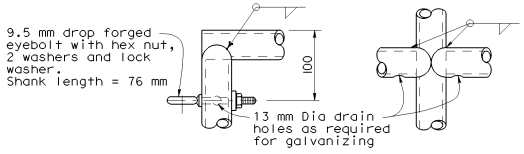

DETAIL A DETAIL B

NOTE
Alternative venting methods may be used if approved by the Engineer.

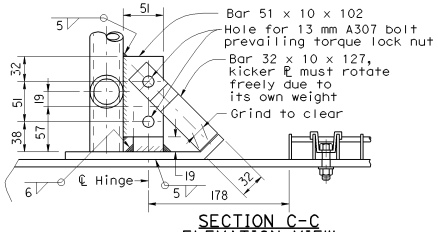

SECTION C-C
ELEVATION VIEW

Caltrans Metric

DIST	COUNTY	ROUTE	KILOMETER POST TOTAL PROJECT	SHEET NO.	TOTAL SHEETS

REGISTERED CIVIL ENGINEER

July 1, 2004
PLANS APPROVAL DATE

REGISTERED PROFESSIONAL ENGINEER Tiliat Sattar No. C42892 Exp. 03-31-2006 CIVIL STATE OF CALIFORNIA

The State of California or its officers or agents shall not be responsible for the accuracy or completeness of electronic copies of this plan sheet.

To get to the Caltrans web site, go to: http://www.dot.ca.gov

STATE OF CALIFORNIA
DEPARTMENT OF TRANSPORTATION

OVERHEAD SIGN-TRUSS SINGLE POST TYPE WALKWAY SAFETY RAILING DETAILS CHANGEABLE MESSAGE SIGNS MODEL 500 AND 510

NO SCALE

ALL DIMENSIONS ARE IN MILLIMETERS UNLESS OTHERWISE SHOWN

S140

2004 Std PLAN S140

06-25-04

Back to Table of Contents

DIST	COUNTY	ROUTE	KILOMETER POST TOTAL PROJECT	SHEET NO.	TOTAL SHEETS

REGISTERED CIVIL ENGINEER

July 1, 2004
PLANS APPROVAL DATE

REGISTERED PROFESSIONAL ENGINEER
Tillat Sattar
No. C42892
Exp. 03-31-2006
CIVIL
STATE OF CALIFORNIA

The State of California or its officers or agents shall not be responsible for the accuracy or completeness of electronic copies of this plan sheet.

To get to the Caltrans web site, go to: http://www.dot.ca.gov

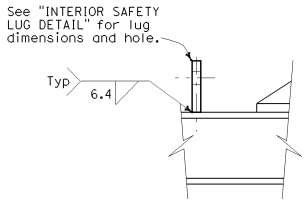

END SAFETY LUG DETAIL

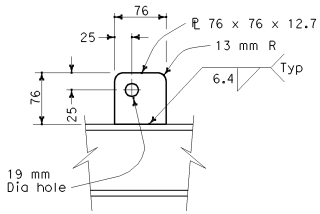

INTERIOR SAFETY LUG DETAIL

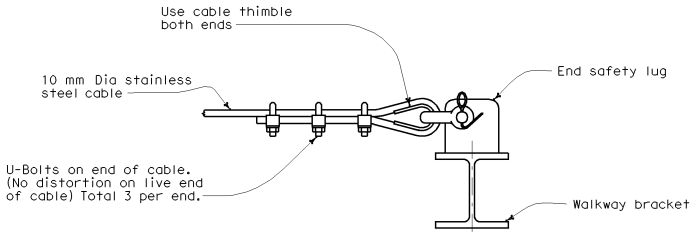

ELEVATION

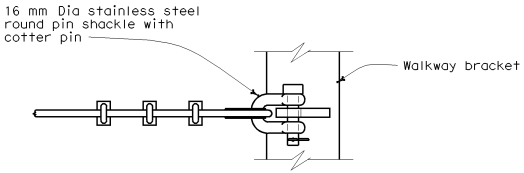

PLAN

END VIEW SAFETY CABLE

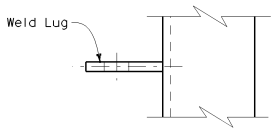

PLAN

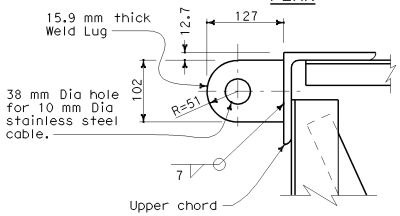

ELEVATION

BACKSIDE WELD LUG

STATE OF CALIFORNIA
DEPARTMENT OF TRANSPORTATION

OVERHEAD SIGN-TRUSS SINGLE POST TYPE SAFETY CABLE ANCHORAGE DETAILS CHANGEABLE MESSAGE SIGNS MODEL 500 AND 510

NO SCALE

ALL DIMENSIONS ARE IN MILLIMETERS UNLESS OTHERWISE SHOWN

S141

08-02-04

2004 Std PLAN S141

Back to Table of Contents

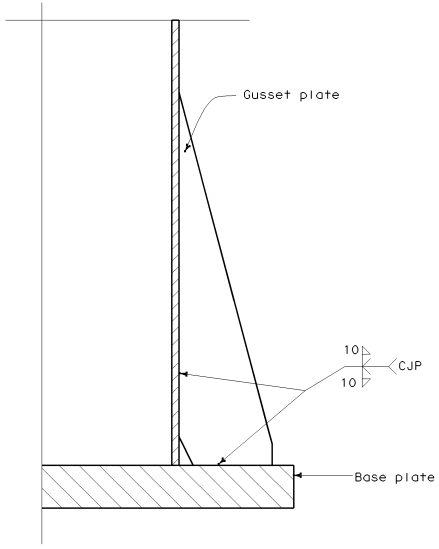

WELD DETAILS

No Scale

NOTES

1. All welding details shall conform to the requirements of AWS D1.1 and special provisions.
2. All gussets to be same height.
3. Provide a smooth transition from gusset plate to tube.

LEGEND

New

Removal

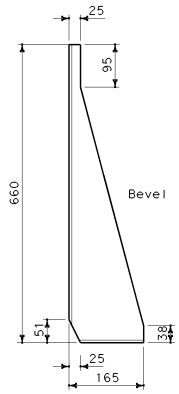

GUSSET PLATE

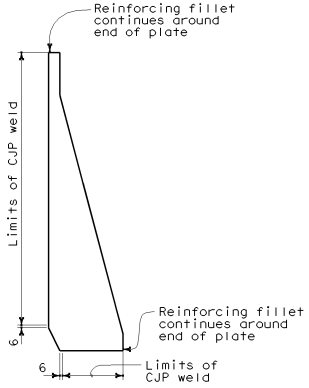

WELD

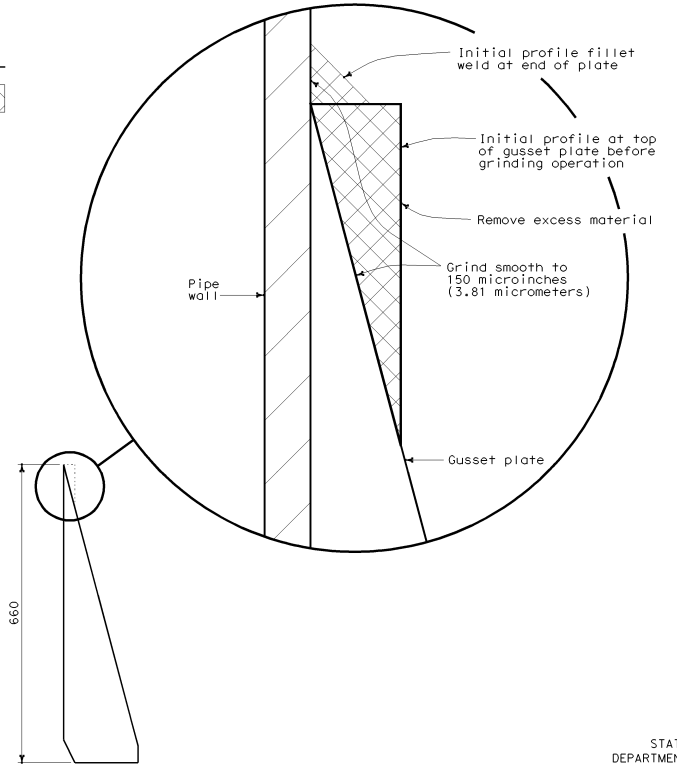

GRIND

GUSSET PLATE PROCESS

Caltrans Metric

DIST	COUNTY	ROUTE	KILOMETER POST TOTAL PROJECT	SHEET NO.	TOTAL SHEETS

REGISTERED ~~CIVIL~~ ENGINEER

July 1, 2004

PLANS APPROVAL DATE

REGISTERED PROFESSIONAL ENGINEER Tiliat Sattar NO. C42892 Exp. 03-31-2006 CIVIL STATE OF CALIFORNIA

The State of California or its officers or agents shall not be responsible for the accuracy or completeness of electronic copies of this plan sheet.

To get to the Caltrans web site, go to: http://www.dot.ca.gov

STATE OF CALIFORNIA
DEPARTMENT OF TRANSPORTATION

OVERHEAD SIGN-TRUSS SINGLE POST TYPE GUSSET PLATE DETAILS CHANGEABLE MESSAGE SIGNS MODEL 500 AND 510

NO SCALE

ALL DIMENSIONS ARE IN MILLIMETERS UNLESS OTHERWISE SHOWN

S142

2004 Std PLAN S142

08-02-04

Back to Table of Contents

ELECTROLIERS

STANDARD TYPES
15, 15D
15 STRUCTURE
21, 21D STRUCTURE
30
31
32
35
36-20A

High mast lighting standard

Double arm lighting standard (Type 15 shown)

Existing electrolier to remain in place unless otherwise specified or indicated.

Foundation for future electrolier, see Project Notes.

NOTES

1. Luminaires shall be 310 W HPS when installed on Type 21, 21D, 30, 31, 32, 35 and 36-20A Standards, unless otherwise specified. Luminaires shall be 200 W HPS when installed on other type standards or poles, unless otherwise specified.
2. Luminaires shall be the cutoff type, ANSI Type III medium cutoff lighting distribution, unless otherwise specified.
3. Variations noted adjacent to symbol on project plans.

Electrolier (see project notes or project plans)

Luminaire on wood pole

STANDARD NOTES

- AB — Abandon. If applied to conduit, remove conductors.
- BC — Install pull box in existing conduit run.
- BP — Pedestrian barricade, type as indicated on plan.
- CB — Install conduit into existing pull box.
- CC — Connect new and existing conduit. Remove existing conductors and install conductors as indicated.
- CF — Conduit to remain for future use. Remove conductors. Install pull wire or rope.
- DH — Detector handhole.
- FA — Foundation to be abandoned.
- IS — Install State-furnished sign on signal mast arm.
- NS — No slip base on standard.
- PEC — Photoelectric control.
- PEU — Photoelectric unit.
- RC — Equipment or material to be removed and become the property of the Contractor.
- RE — Remove electrolier, fuses and ballast. Tape ends of conductors.
- RL — Relocate equipment.
- RR — Remove and reuse equipment.
- RS — Remove and salvage equipment.
- SBI — Install slip base insert.
- SC — Splice new to existing conductors.
- SD — Service disconnect.
- SF — Standard to remain for future use. Remove luminaire, pole conductors, fuses and ballast. Tape disconnects.
- TSP — Telephone service point.

ABBREVIATIONS AND EQUIPMENT DESIGNATIONS

PROPOSED	EXISTING	
BC	bc	Bolt circle
C	C	Conduit
CCTV	cctv	Closed circuit television
CEC	cec	Irrigation controller enclosure cabinet
CKT	ckt	Circuit
CMS	cms	Changeable message sign
DLC	dlc	Loop detector lead-in cable
EMS	ems	Extinguishable message sign
EVC	evc	Emergency vehicle cable
EVD	evd	Emergency vehicle detector
FB	fb	Flashing beacon
FBCA	fbca	Flashing beacon control assembly
FO	fo	Fiber optic
G	G	Ground (Equipment Grounding Conductor)
GFCI	GFCI	Ground fault circuit interrupt
HAR	har	Highway advisory radio
HEX	hex	Hexagonal
HPS	hps	High pressure sodium
IISNS	iisns	Internally illuminated street name sign
ISL	isl	Induction sign lighting
LMA	lma	Luminaire mast arm
LPS	lps	Low pressure sodium
LTG	ltg	Lighting
LUM	lum	Luminaire
MAT	mat	Mast arm mounted vehicle signal faces, top attachment
MAS	mas	Mast arm mounted vehicle signal faces, side attachment
MAS-4A	mas-4A	Mast arm mounted vehicle signal faces, side attachment - 4 signal section
MAS-4B	mas-4B	
MAS-4C	mas-4C	
MAS-5A	mas-5A	Mast arm mounted vehicle signal faces, side attachment - 5 signal section
MAS-5B	mas-5B	
MC	mc	Mercury contactor
	mlc	Magnetometer detector lead-in cable
M/M	m/m	Multiple to multiple transformer
MT	mt	Conduit with pull wire or rope only
MTG	mtg	Mounting
	mv	Mercury vapor lighting fixture
N	N	Neutral (Grounded Conductor)
NC	NC	Normally closed
NO	NO	Normally open
PB	pb	Pull box
PEC	pec	Photoelectric control (Type I, II, III, IV or V as shown)
PED	ped	Pedestrian
PEU	peu	Photoelectric unit
PPB	ppb	Pedestrian push button
RIS	ris	Radio interference suppressor
RL	RL	Relocated equipment
RM	rm	Ramp metering
SBI	sbi	Slip base insert
SB	sb	Slip base
SIC	sic	Signal interconnect cable
SIG	sig	Signal
SMA	sma	Signal mast arm
S/M	s/m	Series to multiple transformer
SNS	sns	Street name sign
SP	sp	Service point
TDC	tdc	Telephone demarcation cabinet
TMS	tms	Traffic monitoring station
TOS	tos	Traffic Operations System
VEH	veh	Vehicle
XFMR	xfmr	Transformer

Caltrans Metric

DIST	COUNTY	ROUTE	KILOMETER POST TOTAL PROJECT	SHEET NO.	TOTAL SHEETS

REGISTERED ELECTRICAL ENGINEER

July 1, 2004
PLANS APPROVAL DATE

REGISTERED PROFESSIONAL ENGINEER Martha V. Styer No. E13738 Exp. 6-30-07 ELECTRICAL STATE OF CALIFORNIA

The State of California or its officers or agents shall not be responsible for the accuracy or completeness of electronic copies of this plan sheet.

To get to the Caltrans web site, go to: http://www.dot.ca.gov

SOFFIT AND WALL MOUNTED LUMINAIRES

Pendant, 70 W HPS unless otherwise specified.

Flush, 70 W HPS unless otherwise specified.

Wall surface, 70 W HPS unless otherwise specified.

Existing soffit or wall luminaire to remain unmodified.

Existing soffit or wall luminaire to be modified as specified.

NOTE

Arrow indicates "street side" of luminaire.

STATE OF CALIFORNIA
DEPARTMENT OF TRANSPORTATION

ELECTRICAL SYSTEMS (SYMBOLS AND ABBREVIATIONS)

NO SCALE

ALL DIMENSIONS ARE IN MILLIMETERS UNLESS OTHERWISE SHOWN

ES-1A

2004 Std PLAN ES-1A

07-16-04

Back to Table of Contents

CONDUIT

PROPOSED	EXISTING	
		Conduit-Lighting, unless otherwise indicated or noted
		Traffic signal conduit
C	c	Communication conduit
T	t	Telephone conduit
F	f	Fire alarm conduit
FO	fo	Fiber optic conduit
		Conduit termination (ES-9A C)
R		Conduit riser in structure

SERVICE EQUIPMENT

PROPOSED	EXISTING	
OH	oh	Overhead lines
U	u	Wood pole "U" indicates utility owned
		Pole guy-with anchor
		Pad mount for ground - mounted utility transformer
III		Service equipment enclosure type
		Service equipment enclosure door indicates front of enclosure
T	t	Telephone demarcation cabinet

POLE-MOUNTED SERVICE DESIGNATION

Type of installation

TYPE H SERVICE - 8.8 m ← Pole height above grade

ILLUMINATED OVERHEAD SIGN

PROPOSED	EXISTING	
		Overhead sign - Single post
		Overhead sign - Two post
		Overhead sign - Mounted on structure
		Overhead sign with electrolier

SIGNAL EQUIPMENT

PROPOSED	EXISTING	
		Pedestrian signal face
		Pedestrian push button post
		Pedestrian barricade
		Vehicle signal face (with backplate, 3-Section: red, yellow and green)
		Vehicle signal face with angle visors
PV	PV	Modifications of basic symbols: "L" indicates all non-arrow sections louvered "LG" indicates louvered green section only "PV" indicates 300 mm programmed visibility sections "200" indicates all 200 mm sections (only when specified)
		Vehicle signal face with red, yellow and green left arrow sections
		Vehicle signal face with red and yellow sections and up green arrow
		Vehicle signal face (5 Section) with yellow and green right arrows and red, yellow and green sections
		Type 1 Standard and attached vehicle signal faces
		Standard with signal mast arm only and attached vehicle signal faces and internally illuminated street name sign
		Type 33 Standard, Left-turn vehicle signal face and sign
		Standard with luminaire and signal mast arms and attached vehicle signal faces
		Cantilever flashing beacon Type 9 Frame, with a sign unless otherwise specified or indicated
Y Y	Y Y	Type 15-FBS Standard with two vehicle signal face sections with lens, backplate and visor
R	Y	Flashing beacon. One vehicle signal face section with lens, backplate and visor. "R" indicates red indication, "Y" indicates yellow indication
		Controller assembly. Door indicates front of cabinet
		Guard post
		Type 1 Standard "Meter On" sign
		Emergency vehicle detector

Caltrans Metric

DIST	COUNTY	ROUTE	KILOMETER POST TOTAL PROJECT	SHEET NO.	TOTAL SHEETS

REGISTERED ELECTRICAL ENGINEER

July 1, 2004
PLANS APPROVAL DATE

REGISTERED PROFESSIONAL ENGINEER Martha V. Styer No. E13738 Exp. 6-30-07 ELECTRICAL STATE OF CALIFORNIA

The State of California or its officers or agents shall not be responsible for the accuracy or completeness of electronic copies of this plan sheet.

To get to the Caltrans web site, go to: http://www.dot.ca.gov

NOTES

1. Arrow signal indications and mast arm signal indications shall be 300 mm. All signal sections shall be 300 mm unless shown otherwise.
2. Signal heads shall be provided with backplates unless shown otherwise.
3. Signal indication shall have LED.

STATE OF CALIFORNIA
DEPARTMENT OF TRANSPORTATION

ELECTRICAL SYSTEMS (SYMBOLS AND ABBREVIATIONS)

NO SCALE

ALL DIMENSIONS ARE IN MILLIMETERS UNLESS OTHERWISE SHOWN

ES-1B

07-15-04

2004 Std PLAN ES-1B

Back to Table of Contents

DIST	COUNTY	ROUTE	KILOMETER POST TOTAL PROJECT	SHEET NO.	TOTAL SHEETS

Caltrans Metric

REGISTERED ELECTRICAL ENGINEER

July 1, 2004
PLANS APPROVAL DATE

REGISTERED PROFESSIONAL ENGINEER Martha V. Styer No. E13738 Exp. 6-30-07 ELECTRICAL STATE OF CALIFORNIA

The State of California or its officers or agents shall not be responsible for the accuracy or completeness of electronic copies of this plan sheet.

To get to the Caltrans web site, go to: http://www.dot.ca.gov

EQUIPMENT IDENTIFICATION

ILLUMINATED SIGN IDENTIFICATION NUMBER:

Sign No. 12345

10 ISL SCI 1.0

- Sign number - Place on post or structure
- Transformer rating (kVA)
- Lighting control type
- Number and type of fixtures

Do NOT place on standard or structure

ELECTROLIER OR EQUIPMENT IDENTIFICATION NUMBER:

12345 - 4.6

- Mast arm length in meters, if shown. Do not place on standard or structure.
- Equipment number - Place on standard or structure. Existing equipment numbers are shown in parenthesis

CONDUIT AND CONDUCTOR IDENTIFICATION:

41C, 2#10, 15#14, 2 DLC

- Number and size of conductors and cables
- Size of conduit in millimeters

Ø1, Ø2, Ø2P, etc. — Traffic phase identification for signal faces, detectors and phase diagrams

1 2 3 — Project note numbers

A B C — Equipment description, installation or item numbers

1 2 3 — Conduit run numbers

SIGNAL AND LIGHTING STANDARD (TYPICAL DESIGNATION):

19A - 3 - 129

- Wind velocity=129 km/h
- Case 3 arm loading
- Standard type
- Standard Plan sheet number
- Detail number or letter

MISCELLANEOUS EQUIPMENT

PROPOSED	EXISTING	
CMS	cms	Changeable message sign
		Closed circuit television camera
		Highway advisory radio pole and antenna
EMS	ems	Extinguishable message sign

SERVICE EQUIPMENT ENCLOSURE LEGEND

P	Pole		External conductor
CB	Circuit breaker		Conductor or bus
A	Ampere		Tie point
V	Volt		Contactor coil
M	Metered		Contactor, Contact NO
UM	Unmetered		Terminal blocks
NB	Neutral bus		Contactor, Contact NC
GB	Ground bus		Enclosure bond
G	Ground		Grounding electrode
N	Neutral		

PULL BOXES

PROPOSED	EXISTING	
		Pull box-No. 5 unless otherwise indicated or noted.
3	9A(21)	Pull box-Additional designations or descriptions

3 = No. 3½ pull box
5 = No. 5 pull box
6 = No. 6 pull box
7 = No. 7 (Ceiling pull box)
8 = No. 8 (Pendant soffit pull box)
9 = No. 9 pull box
9A = No. 9A pull box

(C) = Communications pull box
(E) = Pull box with extension
(S) = Sprinkler control pull box
(21) = Anchor bolts and conduit for future installation of Type 21 Standard
(T) = Traffic pull box

VEHICLE DETECTORS

5 J 9 U

- Vehicle detector designation
- U = Upper
  L = Lower
- Slot number in input file
- Input file (I or J)
- Phase

PROPOSED	EXISTING	
		Type A detector loop. Outline of sawcut shown.
		Type B detector loop. Outline of sawcut shown.
		Type C detector loop. Outline of sawcut shown.
		Type D detector loop. Outline of sawcut shown.
		Type E detector loop. Outline of sawcut shown.
		Type O detector loop. Outline of sawcut shown.
		Magnetic detector
DH	dh	Detector handhole
		Magnetometer detectors

STATE OF CALIFORNIA
DEPARTMENT OF TRANSPORTATION

ELECTRICAL SYSTEMS (SYMBOLS AND ABBREVIATIONS)

NO SCALE

ALL DIMENSIONS ARE IN MILLIMETERS UNLESS OTHERWISE SHOWN

ES-1C

2004 Std PLAN ES-1C

07-15-04

Back to Table of Contents

DIST	COUNTY	ROUTE	KILOMETER POST TOTAL PROJECT	SHEET NO.	TOTAL SHEETS

REGISTERED ELECTRICAL ENGINEER

July 1, 2004
PLANS APPROVAL DATE

REGISTERED PROFESSIONAL ENGINEER Martha V. Styer No. E13738 Exp. 6-30-07 ELECTRICAL STATE OF CALIFORNIA

The State of California or its officers or agents shall not be responsible for the accuracy or completeness of electronic copies of this plan sheet.

To get to the Caltrans web site, go to: http://www.dot.ca.gov

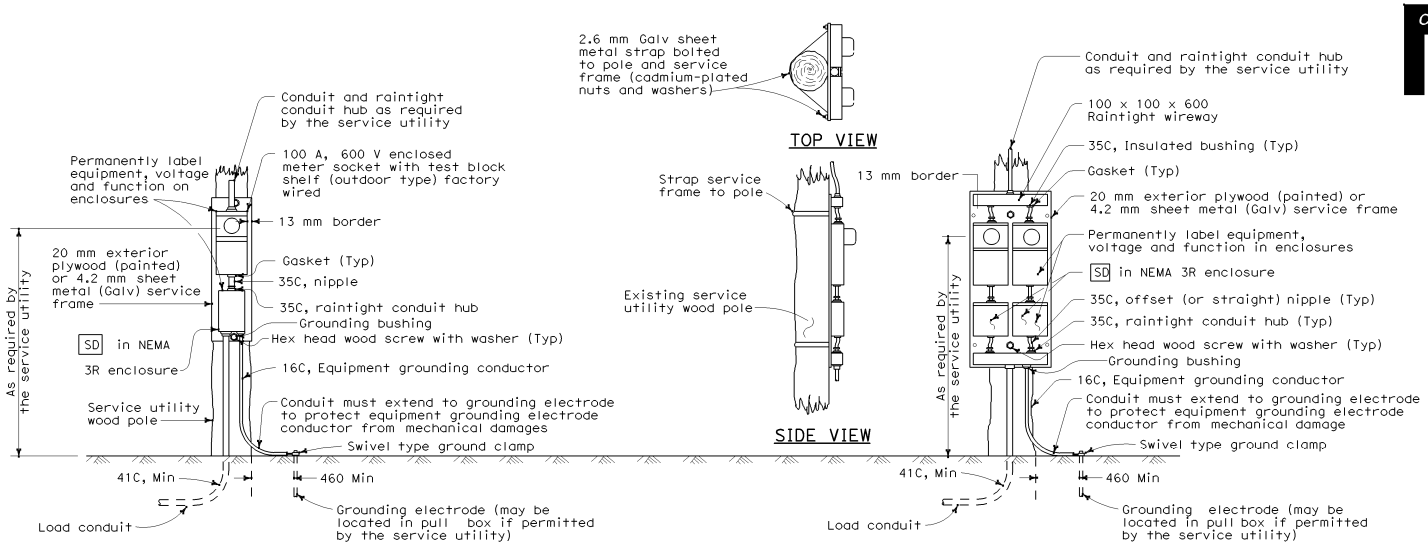

TYPE SCE-1 SERVICE

TYPE SCE-2 SERVICE

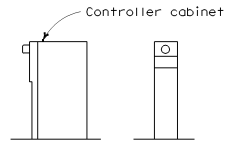

TYPE OF SERVICE (TYPICAL)

Type II service equipment enclosure mounted on a side of a controller cabinet. Type III complete free-standing service equipment enclosure.

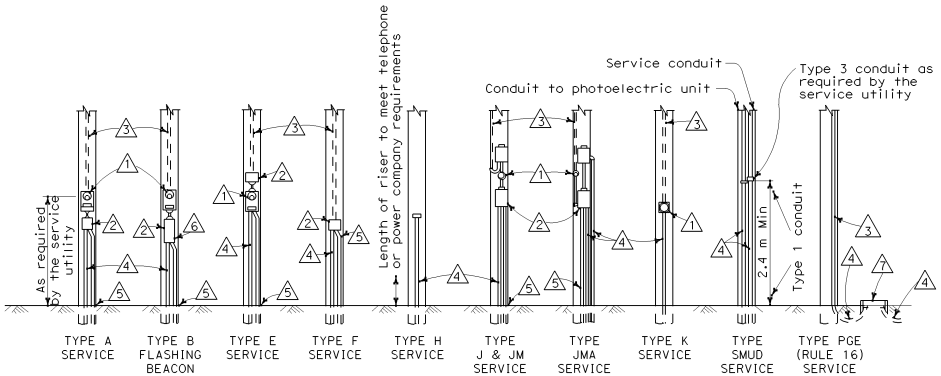

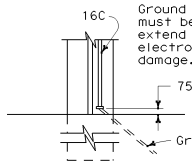

TYPE A

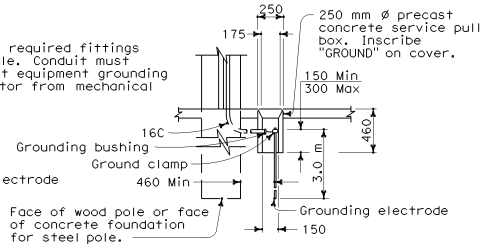

TYPE B

Use where service utility requires 460 mm clearance between grounding electrode and the pole or service equipment enclosure. Installation shown is for sidewalk or paved areas. In unpaved areas, omit special service pull box and locate ground clamp above ground or locate ground clamp in nearest pull box.

SERVICE GROUNDING

NOTES

1. Meter socket.
2. Service enclosure with a minimum 60 A rated main circuit breaker, unless otherwise shown.
3. (a) Utility owned pole. The service utility will furnish and install required service riser, PEU with conductors and other equipment as needed.
   (b) State owned pole. The Contractor shall furnish and install required service riser and equipment.
4. Conduit, length and size as required.
5. 16C, 1#6. See "Service Grounding" detail.
6. Flashing beacon control assembly.
7. Service pull box, No. 5 unless otherwise noted, furnished and installed by the Contractor. Service utility shall determine the exact location.

POLE MOUNTED SERVICE INSTALLATIONS

STATE OF CALIFORNIA
DEPARTMENT OF TRANSPORTATION

ELECTRICAL SYSTEMS (SERVICE EQUIPMENT)

NO SCALE

ALL DIMENSIONS ARE IN MILLIMETERS UNLESS OTHERWISE SHOWN

ES-2A

07-06-04

Back to Table of Contents

DIST	COUNTY	ROUTE	KILOMETER POST TOTAL PROJECT	SHEET NO.	TOTAL SHEETS

Caltrans Metric

REGISTERED ELECTRICAL ENGINEER

July 1, 2004
PLANS APPROVAL DATE

REGISTERED PROFESSIONAL ENGINEER
Martha V. Styer
No. E13738
Exp. 6-30-07
ELECTRICAL
STATE OF CALIFORNIA

The State of California or its officers or agents shall not be responsible for the accuracy or completeness of electronic copies of this plan sheet.

To get to the Caltrans web site, go to: http://www.dot.ca.gov

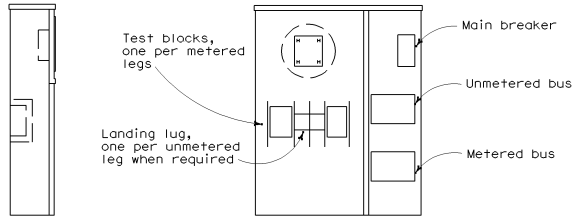

SIDE VIEW ELEVATION

TYPE II-A SERVICE EQUIPMENT ENCLOSURE

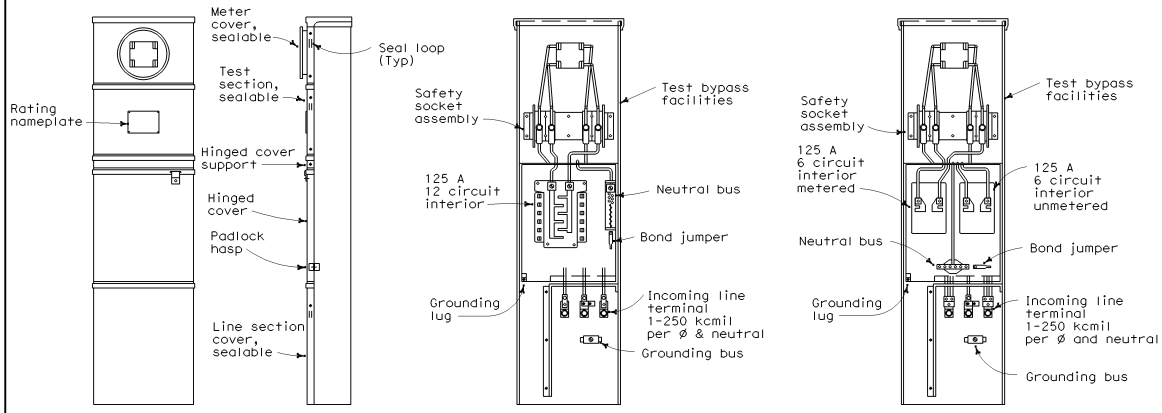

FRONT VIEW SIDE VIEW FRONT VIEW FRONT VIEW

(Less covers and dead front panel) For metered circuits only

(Less covers and dead front panel) For metered and unmetered circuits

TYPE II-B SERVICE EQUIPMENT ENCLOSURE

NOTES-TYPE II SERVICE EQUIPMENT ENCLOSURES

1. Service equipment enclosures and metering equipment shall meet the requirements of the service utility. When the service utility provides both metered and unmetered circuits, a separate bus shall be provided for each circuit.
2. Service equipment enclosures shall be factory wired NEMA 3R construction and shall be provided with dead front panel and provisions for padlocking.
3. Control wiring shall be 600 V, No. 14 AWG stranded (THHN) machine tool wire. Where subject to flexing, 19 strand wire shall be used.
4. Main bus shall be rated for 125 A and shall be tin-plated copper.
5. An engraved phenolic nameplate on the dead front panel indicating the function of each circuit or device shall be installed with stainless steel rivets or stainless steel screws:
   a) Adjacent to the breaker or device with character size a minimum of 3 mm.
   b) At the top of the exterior door panel indicating system number, voltage level and number of phases with character size a minimum of 5 mm.
6. A plastic laminated wiring diagram shall be provided and attached to the inside of the front door.
7. In unpaved areas, a raised portland cement concrete pad of 600 mm x 100 mm x width of service equipment enclosure foundation or controller cabinet foundation shall be constructed in front of Type II service equipment enclosure.
8. Internal bus, where shown, is typical only. Alternative designs of proposed service equipment enclosure shall be submitted to the Engineer for approval.
9. Circuit breakers may be mounted in the vertical or horizontal position.
10. Dimensions of service equipment enclosures shall meet the requirements of the service utility.
11. Minimum clearance shall be required for front and back of service equipment enclosures per National Electrical Code, Article 110.26, "Spaces About Electrical Equipment (600 Volts, Nominal, or Less)".

STATE OF CALIFORNIA
DEPARTMENT OF TRANSPORTATION

ELECTRICAL SYSTEMS (SERVICE EQUIPMENT TYPE II SERIES)

NO SCALE

ALL DIMENSIONS ARE IN MILLIMETERS UNLESS OTHERWISE SHOWN

ES-2B

2004 Std PLAN ES-2B

07-15-04

Back to Table of Contents

DIST	COUNTY	ROUTE	KILOMETER POST TOTAL PROJECT	SHEET NO.	TOTAL SHEETS

Caltrans Metric

REGISTERED ELECTRICAL ENGINEER

July 1, 2004
PLANS APPROVAL DATE

REGISTERED PROFESSIONAL ENGINEER Martha V. Styer No. E13738 Exp. 6-30-07 ELECTRICAL STATE OF CALIFORNIA

The State of California or its officers or agents shall not be responsible for the accuracy or completeness of electronic copies of this plan sheet.

To get to the Caltrans web site, go to: http://www.dot.ca.gov

NOTES-TYPE III SERVICE EQUIPMENT ENCLOSURES

1. Service equipment enclosure and metering equipment shall meet the requirements of the service utility. When the service utility provides both metered and unmetered circuits, a separate bus shall be provided for each circuit. The meter area shall have a sealable, lockable, weathertight cover that can be removed without the use of tools.

2. Service equipment enclosures shall be factory wired and conform to NEMA standards.

3. Dimensions of service equipment enclosures shall meet the requirements of the service utility.

4. The dead front panels on Type III-A service equipment enclosures shall have a continuous stainless steel or aluminum piano hinge. The panel in front of the breakers shall be secured with captive screws and the lower panel shall be secured with a latch or captive screws. No live parts shall be mounted on the dead front panel.

5. The exterior door shall have provisions for padlocking. The padlock hole shall be a minimum diameter of 11 mm.

6. Enclosures housing transformers of more than one kVA shall have effective screened ventilation louvers of not less than 32 000 mm^2. Screen shall be stainless steel No. 304, with a No. 10 size mesh. Framed screen shall be secured with at least four bolts.

7. Fasteners on the exterior of the enclosure shall be vandal-resistant and shall not be removable from the exterior. Screws, nuts, bolts and washers shall be stainless steel.

8. Landing lugs for incoming service conductors shall be compatible with either copper or aluminum conductors sized to suit the conductors shown on the plan. Landing lugs shall be copper or tin-plated aluminum. Neutral bus shall be rated for 125 A and be suitable for copper or aluminum conductors unless otherwise specified. The terminal shall include but not be limited to:

   a) Incoming terminals (landing lugs)
   b) Neutral lugs
   c) Solid neutral terminal strip
   d) Terminal strips for conductors within the enclosure.

9. At least 6 standard single pole circuit breaker spaces, 20 mm nominal, shall be provided for branch circuits. Circuit breaker interiors shall be copper. Interiors shall accept plug-in or cable-in/cable-out circuit breakers.

10. Control wiring shall be 600 V, 14 stranded machine tool wire. Where subject to flexing, 19 strand wire shall be used.

11. Main bus shall be rated for 125 A and shall be tin-plated copper.

12. A plastic laminated wiring diagram shall be provided with brass mounting eyelets and attached to the inside of the enclosure.

13. An engraved phenolic nameplate on the dead front panel indicating the function of each circuit or device shall be installed with stainless steel rivets or stainless steel screws:

    a) Adjacent to the breaker or device with character size a minimum of 3 mm.

    b) At the top of the exterior door panel indicating system number, voltage level and number of phases with character size a minimum of 5 mm.

14. The plan shows the approximate location of devices within the enclosure. Components may be rearranged, however, the "working" clearances within the service equipment enclosure shall be maintained.

15. In unpaved areas a raised portland cement concrete pad 600 mm x 100 mm x width of foundation shall be constructed in front of new service equipment enclosure installation. Pad shall be set to elevation of foundation.

16. Foundation shall extend 50 mm minimum beyond edge of service equipment enclosure.

17. Internal bus, where shown, is typical only. Alternative design of proposed service equipment enclosure shall be submitted to the Engineer for approval.

18. Plug-in circuit breakers may be mounted in the vertical or horizontal position. Cable-in/cable-out circuit breakers shall be mounted in the vertical position.

19. Type III-AF and Type III-BF service equipment enclosures shall have the meter viewing windows located on the front side of the service equipment enclosures.

20. The Type III-AR and Type III-BR service equipment enclosures shall be similarly constructed as Type III-AF and Type III-BF respectively, except the meter viewing windows shall be located on the back side of the service equipment enclosures.

21. Minimum clearance shall be required for front and back of service equipment enclosure per National Electrical Code, Article 110.26, "Spaces About Electric Equipment (600 Volts, Nominal, or Less)".

STATE OF CALIFORNIA
DEPARTMENT OF TRANSPORTATION

ELECTRICAL SYSTEMS (SERVICE EQUIPMENT NOTES TYPE III SERIES)

NO SCALE

ALL DIMENSIONS ARE IN MILLIMETERS UNLESS OTHERWISE SHOWN

ES-2C

07-08-04

2004 Std PLAN ES-2C

Back to Table of Contents

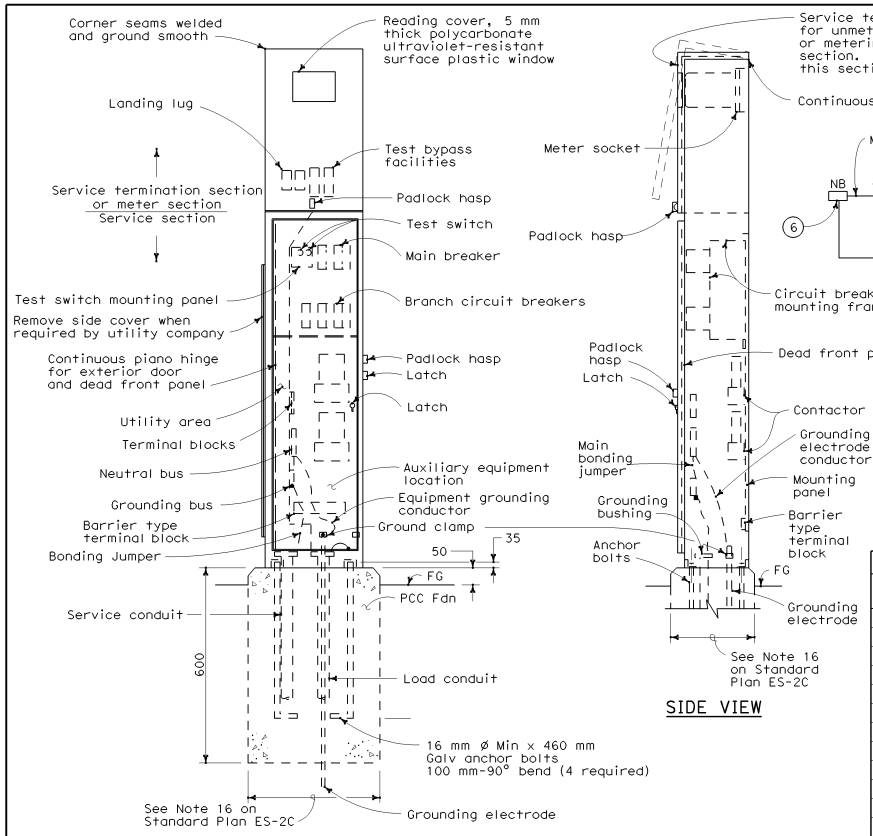

TYPE III-AF SERVICE EQUIPMENT ENCLOSURE (TYPICAL)

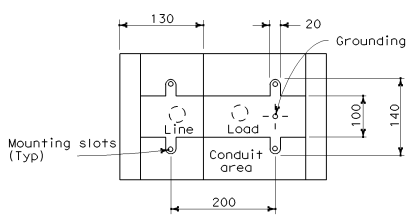

BASE FOR TYPE III-A SERVICE EQUIPMENT ENCLOSURE

See Note 8

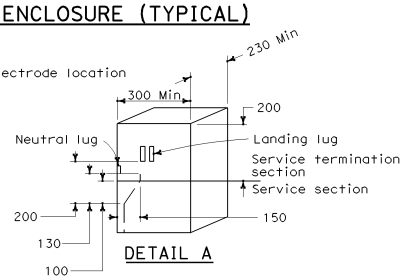

DETAIL A

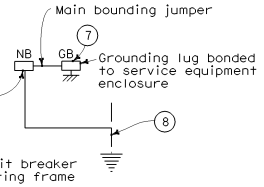

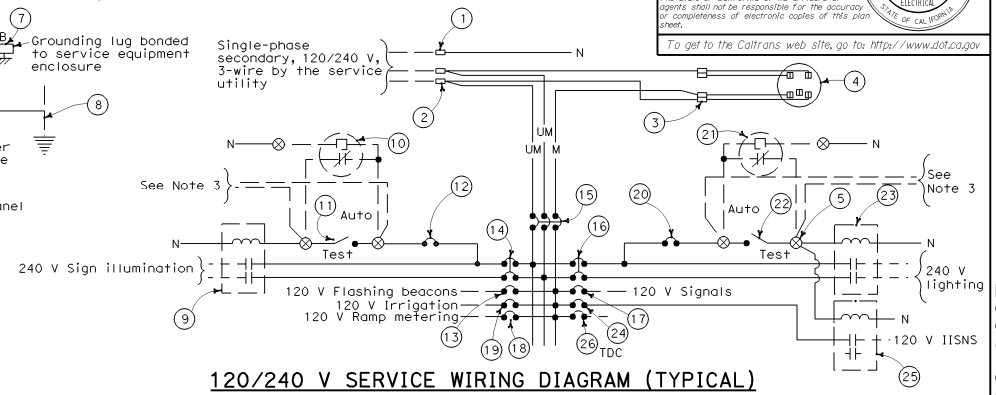

120/240 V SERVICE WIRING DIAGRAM (TYPICAL)

TYPE III-A SERVICE (120/240 V) EQUIPMENT LEGEND

ITEM No.	COMPONENT	NAME PLATE DESCRIPTION	ITEM No.	COMPONENT	NAME PLATE DESCRIPTION
1	Neutral lug		14	30 A, 240 V, 2P, CB	Sign Illumination
2	Landing lug (Note 6)		15	100 A, 240 V, 3P, CB	Main Breaker
3	Test bypass facility		16	30 A, 240 V, 2P, CB	Lighting
4	Meter socket and support		17	50 A, 120 V, 1P, CB	Signals
5	Terminal blocks		18	30 A, 120 V, 1P, CB	Ramp Metering
6	Neutral bus		19	20 A, 120 V, 1P, CB	Irrigation
7	Grounding bus		20	15 A, 120 V, 1P, CB	Lighting Control
8	Grounding electrode		21	Photoelectric unit (Note 7)	
9	30 A, 2PNO Contactor	Sign Illumination	22	15 A, 1P, Test switch	Lighting Test Switch
10	Photoelectric unit (Note 7)		23	60 A, 2PNO Contactor	Lighting
11	15 A, 1P, Test switch	Sign Illumination Test Switch	24	15 A, 120 V, 1P, CB	IISNS
12	15 A, 120 V, 1P, CB	Sign Illumination Control	25	30 A, 2PNO Contactor	IISNS
13	15 A, 120 V, 1P, CB	Flashing Beacon	26	20 A, 120 V, 1P, CB	Telephone Demarcation Cabinet

NOTES (FOR SERVICE EQUIPMENT ENCLOSURE)

1. Voltage ratings of service equipment shall conform to the service voltages indicated on the plans.
2. Unless otherwise indicated on the plans, service equipment items shall be provided for each service equipment enclosure as shown.
3. Connect to remote test switch mounted on lighting standards, sign post or structure when required.
4. Items No. 1 and 6 shall be isolated from the service equipment enclosure.
5. Meter sockets shall be 5 clip type.
6. The landing lug shall be suitable for multiple conductors.
7. Type V photoelectric control shall be used unless otherwise indicated on the plans.

Caltrans Metric

DIST	COUNTY	ROUTE	KILOMETER POST TOTAL PROJECT	SHEET NO.	TOTAL SHEETS

REGISTERED ELECTRICAL ENGINEER

July 1, 2004
PLANS APPROVAL DATE

REGISTERED PROFESSIONAL ENGINEER Martha V. Styer No. E13738 Exp. 6-30-07 ELECTRICAL STATE OF CALIFORNIA

The State of California or its officers or agents shall not be responsible for the accuracy or completeness of electronic copies of this plan sheet.

To get to the Caltrans web site, go to: http://www.dot.ca.gov

STATE OF CALIFORNIA
DEPARTMENT OF TRANSPORTATION

ELECTRICAL SYSTEMS (SERVICE EQUIPMENT AND TYPICAL WIRING DIAGRAM, TYPE III -A SERIES)

NO SCALE

ALL DIMENSIONS ARE IN MILLIMETERS UNLESS OTHERWISE SHOWN

ES-2D

07-09-04

Back to Table of Contents

DIST	COUNTY	ROUTE	KILOMETER POST TOTAL PROJECT	SHEET NO.	TOTAL SHEETS

Caltrans Metric

REGISTERED ELECTRICAL ENGINEER

July 1, 2004
PLANS APPROVAL DATE

REGISTERED PROFESSIONAL ENGINEER Martha V. Styer No. E13738 Exp. 6-30-07 ELECTRICAL STATE OF CALIFORNIA

The State of California or its officers or agents shall not be responsible for the accuracy or completeness of electronic copies of this plan sheet.

To get to the Caltrans web site, go to: http://www.dot.ca.gov

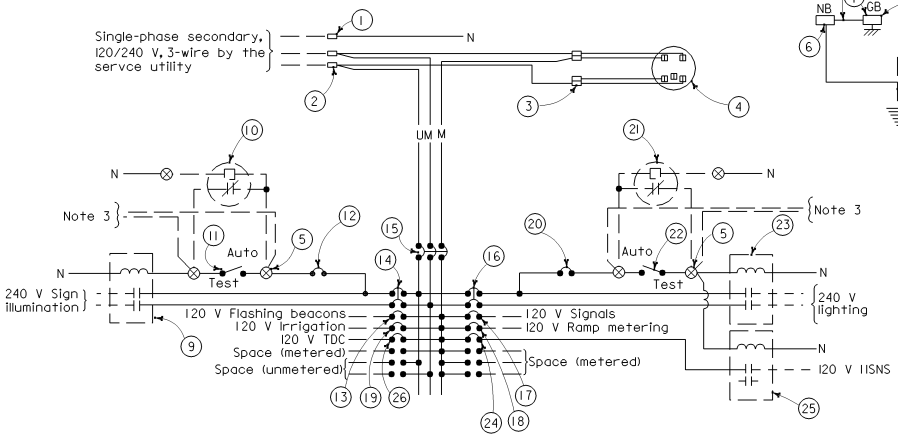

120/240 V SERVICE WIRING DIAGRAM (TYPICAL)

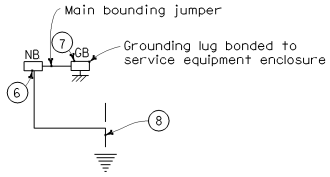

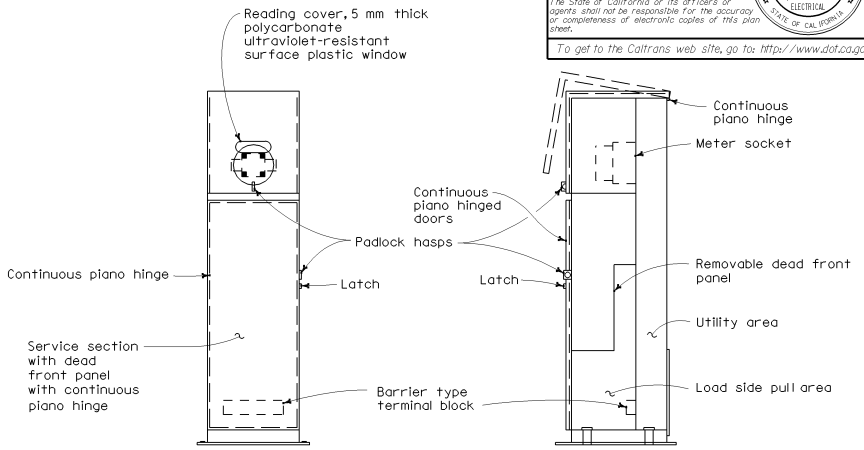

FRONT VIEW SIDE VIEW

TYPE III-BF SERVICE EQUIPMENT ENCLOSURE WITH PROVISIONS FOR ONE 100 A METER (TYPICAL)

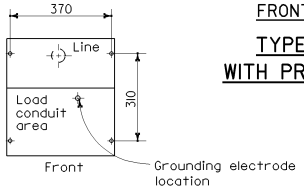

BASE FOR TYPE III-B SERVICE EQUIPMENT ENCLOSURE

Note 8

TYPE III-B SERVICE (120/240 V) EQUIPMENT LEGEND		
ITEM No.	COMPONENT	NAME PLATE DESCRIPTION
1	Neutral lug	
2	Landing lug (Note 6)	
3	Test bypass facility	
4	Meter socket and support	
5	Terminal blocks	
6	Neutral bus	
7	Grounding bus	
8	Grounding electrode	
9	30 A, 2PNO Contactor	Sign Illumination
10	Photoelectric unit (Note 7)	
11	15 A, 1P, Test switch	Sign Illumination Test Switch
12	15 A, 120 V, 1P, CB	Sign Illumination Control
13	15 A, 120 V, 1P, CB	Flashing Beacon
14	30 A, 240 V, 2P, CB	Sign Illumination
15	100 A, 240 V, 3P, CB	Main Breaker
16	30 A, 240 V, 2P, CB	Lighting
17	50 A, 120 V, 1P, CB	Signals
18	30 A, 120 V, 1P, CB	Ramp Metering
19	20 A, 120 V, 1P, CB	Irrigation
20	15 A, 120 V, 1P, CB	Lighting Control
21	Photoelectric unit (Note 7)	
22	15 A, 1P, Test switch	Lighting Test Switch
23	60 A, 2PNO Contactor	Lighting
24	15 A, 120 V, 1P, CB	IISNS
25	30 A, 2PNO Contactor	IISNS
26	20 A, 120 V, 1P, CB	Telephone Demarcation Cabinet

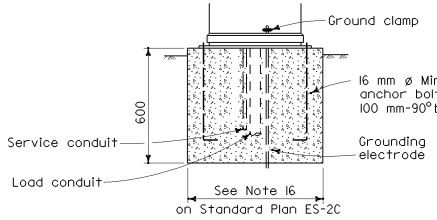

FRONT VIEW

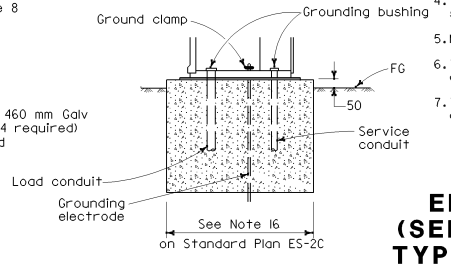

SIDE VIEW

TYPE III-B SERVICE EQUIPMENT ENCLOSURE FOUNDATION DETAILS

NOTES (FOR SERVICE EQUIPMENT ENCLOSURE)

1. Voltage ratings of service equipment shall conform to the service voltages indicated on the plans.
2. Unless otherwise indicated on the plans, service equipment items shall be provided for each service equipment enclosure as shown.
3. Connect to remote test switch mounted on lighting standards, sign post or structure when required.
4. Items No. 1 and 6 shall be isolated from the service equipment enclosure.
5. Meter sockets shall be 5 clip type.
6. The landing lug shall be suitable for multiple conductors.
7. Type V photoelectric control shall be used unless otherwise indicated on the plans.

STATE OF CALIFORNIA
DEPARTMENT OF TRANSPORTATION

ELECTRICAL SYSTEMS (SERVICE EQUIPMENT AND TYPICAL WIRING DIAGRAM, TYPE III -B SERIES)

NO SCALE

ALL DIMENSIONS ARE IN MILLIMETERS UNLESS OTHERWISE SHOWN

ES-2E

07-09-04

Back to Table of Contents

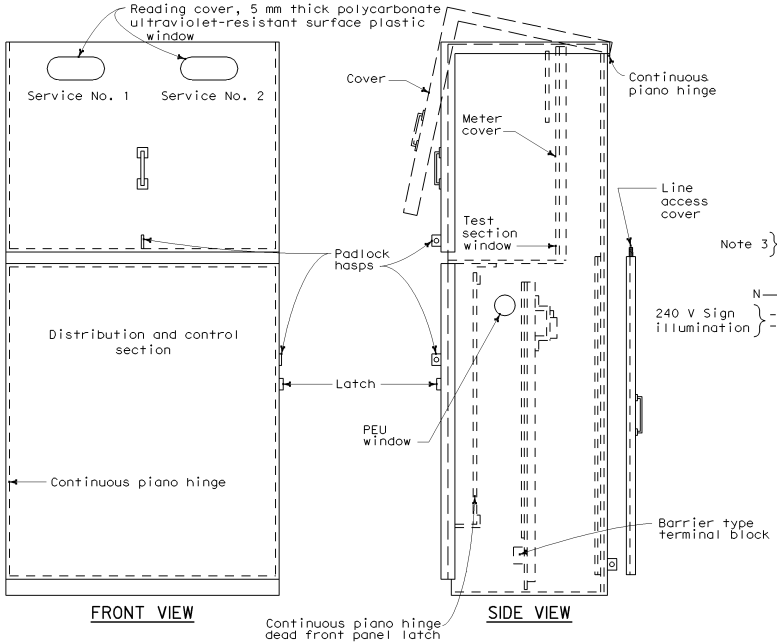

TYPE III-CF SERVICE EQUIPMENT ENCLOSURE WITH PROVISIONS FOR TWO 100 A METERS (TYPICAL)

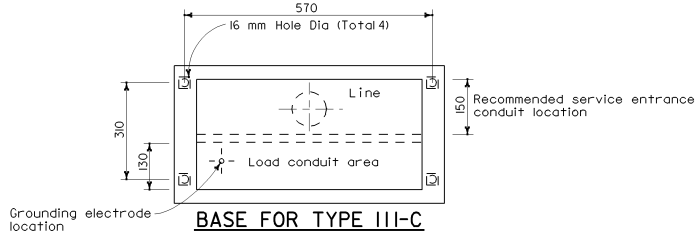

BASE FOR TYPE III-C SERVICE EQUIPMENT ENCLOSURE

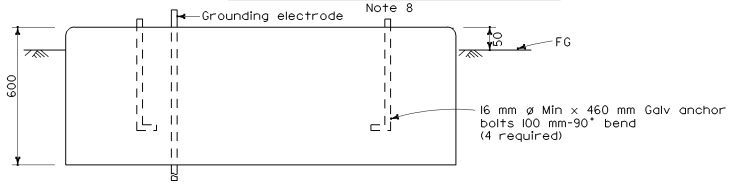

FOUNDATION DETAIL

(See Note 16 on Standard Plan ES-2C)

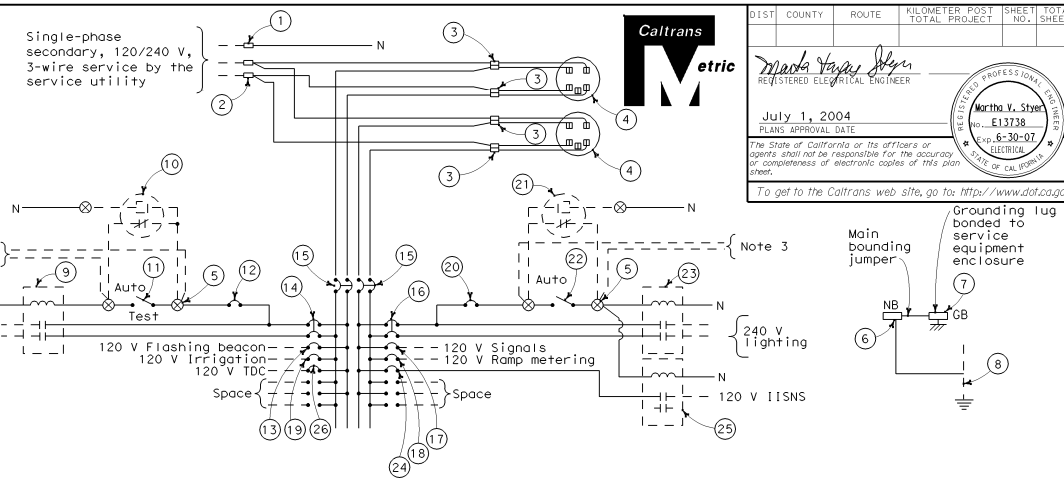

120/240 V SERVICE WIRING DIAGRAM (TYPICAL)

TYPE III-C SERVICE (120/240 V) EQUIPMENT LEGEND

ITEM No.	COMPONENT	NAME PLATE DESCRIPTION	ITEM No.	COMPONENT	NAME PLATE DESCRIPTION
1	Neutral lug		14	30 A,240 V,2P,CB	Sign Illumination
2	Landing lug (Note 6)		15	100 A,240 V,2P,CB	Main Breaker
3	Test bypass facility		16	30 A,240 V,2P,CB	Lighting
4	Meter socket and support		17	50 A,120 V,1P,CB	Signals
5	Terminal blocks		18	30 A,120 V,1P,CB	Ramp Metering
6	Neutral bus		19	20 A,120 V,1P,CB	Irrigation
7	Grounding bus		20	15 A,120 V,1P,CB	Lighting Control
8	Grounding electrode		21	Photoelectric unit(Note 7)	
9	30 A,2PNO, Contactor	Sign Illumination	22	15 A,1P,Test switch	Lighting Control
10	Photoelectric unit (Note 7)		23	60 A,2PNO Contactor	Lighting
11	15 A,1P, Test switch	Sign Illumination Test Switch	24	15 A,120 V,1P,CB	IISNS
12	15 A,120 V,1P,CB	Sign Illumination Control	25	30 A,2PNO Contactor	IISNS
13	15 A,120 V,1P,CB	Flashing Beacon	26	20 A,120 V,1P,CB	Telephone Demarcation Cabinet

NOTES (FOR SERVICE EQUIPMENT ENCLOSURE)

1. Voltage ratings of service equipment shall conform to the service voltages indicated on the plans.
2. Unless otherwise indicated on the plans, service equipment items shall be provided for each service equipment enclosure as shown.
3. Connect to remote test switch mounted on lighting standards, sign post or structure when required.
4. Items No. 1 and 6 shall be isolated from the service equipment enclosure.
5. Meter sockets shall be 5 clip type.
6. The landing lug shall be suitable for multiple conductors.
7. Type V photoelectric control shall be used unless otherwise indicated on the plans.

Caltrans Metric

DIST	COUNTY	ROUTE	KILOMETER POST TOTAL PROJECT	SHEET NO.	TOTAL SHEETS

REGISTERED ELECTRICAL ENGINEER

July 1, 2004
PLANS APPROVAL DATE

REGISTERED PROFESSIONAL ENGINEER Martha V. Styer No. E13738 Exp. 6-30-07 ELECTRICAL STATE OF CALIFORNIA

The State of California or its officers or agents shall not be responsible for the accuracy or completeness of electronic copies of this plan sheet.

To get to the Caltrans web site, go to: http://www.dot.ca.gov

STATE OF CALIFORNIA
DEPARTMENT OF TRANSPORTATION

ELECTRICAL SYSTEMS (SERVICE EQUIPMENT AND TYPICAL WIRING DIAGRAM TYPE III -C SERIES)

NO SCALE

ALL DIMENSIONS ARE IN MILLIMETERS UNLESS OTHERWISE SHOWN

ES-2F

07-06-04

Back to Table of Contents

NOTES (FOR SERVICE EQUIPMENT ENCLOSURE)

1. Voltage ratings of service equipment shall conform to the service voltages indicated on the plans.
2. Unless otherwise indicated on the plans, all service equipment items shall be provided for each service equipment enclosure as shown.
3. Connect to remote test switch mounted on lighting standards, sign post or structure when required.
4. Items No. (1) and (6) shall be isolated from the service equipment enclosure.
5. Meter sockets shall be the 7 clip type.
6. The landing lug shall be suitable for multiple conductors.
7. Type V photoelectric control shall be used unless otherwise indicated on the plans.
8. Service pedestal shall meet the requirements of EUSERC 308 or 309 in addition to the information given on this sheet.
9. Color of insulation of the neutral shall be gray for the 277/480 V system and shall be white for the 120/240 V system.

Caltrans Metric

DIST	COUNTY	ROUTE	KILOMETER POST TOTAL PROJECT	SHEET NO.	TOTAL SHEETS

REGISTERED ELECTRICAL ENGINEER

July 1, 2004
PLANS APPROVAL DATE

REGISTERED PROFESSIONAL ENGINEER Martha V. Styer No. E13738 Exp. 6-30-07 ELECTRICAL STATE OF CALIFORNIA

The State of California or its officers or agents shall not be responsible for the accuracy or completeness of electronic copies of this plan sheet.

To get to the Caltrans web site, go to: http://www.dot.ca.gov

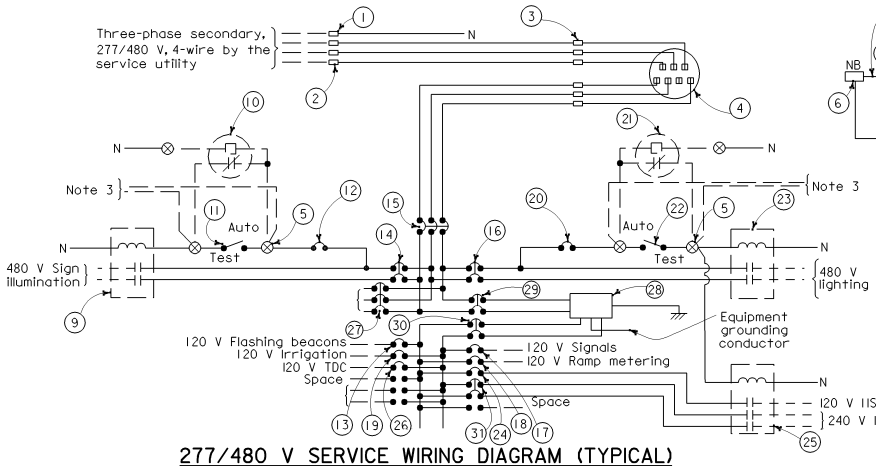

277/480 V SERVICE WIRING DIAGRAM (TYPICAL)

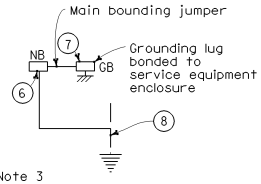

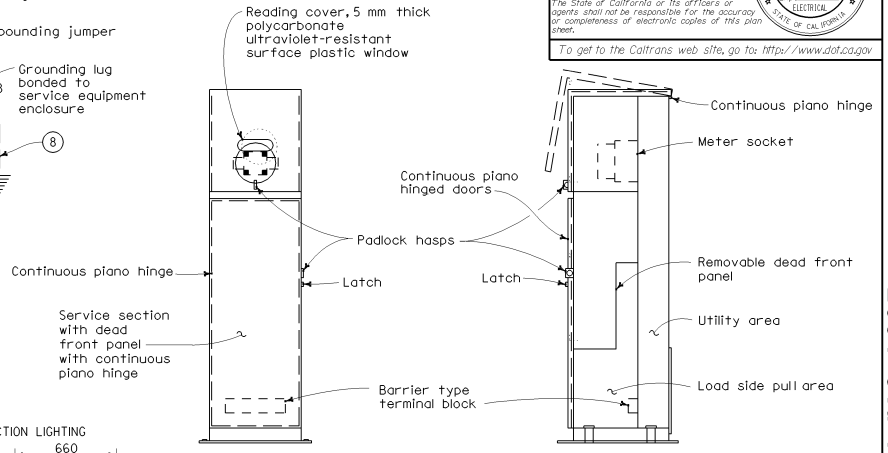

FRONT VIEW

SIDE VIEW

TYPE III-DF SERVICE EQUIPMENT ENCLOSURE WITH PROVISIONS FOR ONE 100 A METER (TYPICAL)

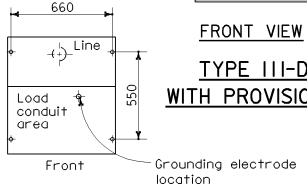

BASE FOR TYPE III-D SERVICE EQUIPMENT ENCLOSURE

TYPE III-D SERVICE (277/480 V) EQUIPMENT LEGEND					
ITEM No.	COMPONENT	NAME PLATE DESCRIPTION	ITEM No.	COMPONENT	NAME PLATE DESCRIPTION
(1)	Neutral lug		(27)	20 A, 480 V, 3P, CB	Spare
(2)	Landing lug (Note 6)		(28)	10 kVA, 480-120/240 V Transformer	10 kVA, 480-120/240 V, 1Ø
(3)	Test bypass facility		(29)	30 A, 480 V, 2P, CB	Trans Primary (480 V)
(4)	Meter socket and support		(30)	60 A, 240 V, 2P, CB	Trans Secondary (240 V)
(5)	Terminal blocks		(31)	30 A, 240 V, 2P, CB	Intersection Lighting (240 V)
(6)	Neutral bus				
(7)	Grounding lug				
(8)	Grounding electrode				
(9)	15 A, 2PNO Contactor	Sign Illumination (480 V)			
(10)	Photoelectric unit (Note 7)				
(11)	15 A, 1P, Test switch	Sign Illumination Test Switch (277 V)			
(12)	15 A, 277 V, 1P, CB	Sign Illumination Control (277 V)			
(13)	15 A, 120 V, 1P, CB	Flashing Beacon (120 V)			
(14)	15 A, 480 V, 2P, CB	Sign Illumination (480 V)			
(15)	100 A, 480 V, 3P, CB	Main Breaker (480 V)			
(16)	15 A, 480 V, 2P, CB	Lighting (480 V)			
(17)	50 A, 120 V, 1P, CB	Signals (120 V)			
(18)	30 A, 120 V, 1P, CB	Ramp Metering (120 V)			
(19)	20 A, 120 V, 1P, CB	Irrigation (120 V)			
(20)	15 A, 277 V, 1P, CB	Lighting Control (277 V)			
(21)	Photoelectric unit (Note 7)				
(22)	15 A, 1P, 277 V, Test switch	Lighting Test Switch (277 V)			
(23)	30 A, 2PNO Contactor	Lighting (480 V)			
(24)	15 A, 120 V, 1P, CB	IISNS (120 V)			
(25)	30 A, 2PNO Contactor	Intersection Lighting (240 V)			
(26)	20 A, 120 V, 1P, CB	Telephone Demarcation Cabinet (120 V)			

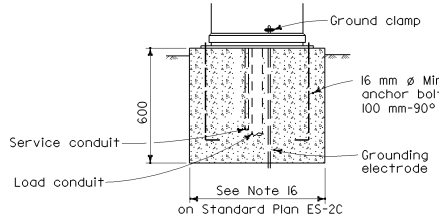

FRONT VIEW

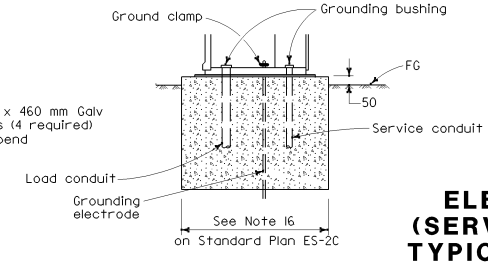

SIDE VIEW

TYPE III-D SERVICE EQUIPMENT ENCLOSURE FOUNDATION DETAILS

STATE OF CALIFORNIA
DEPARTMENT OF TRANSPORTATION

ELECTRICAL SYSTEMS (SERVICE EQUIPMENT AND TYPICAL WIRING DIAGRAM, TYPE III -D SERIES)

NO SCALE

ALL DIMENSIONS ARE IN MILLIMETERS UNLESS OTHERWISE SHOWN

ES-2G

07-15-04

2004 Std PLAN ES-2G

Back to Table of Contents

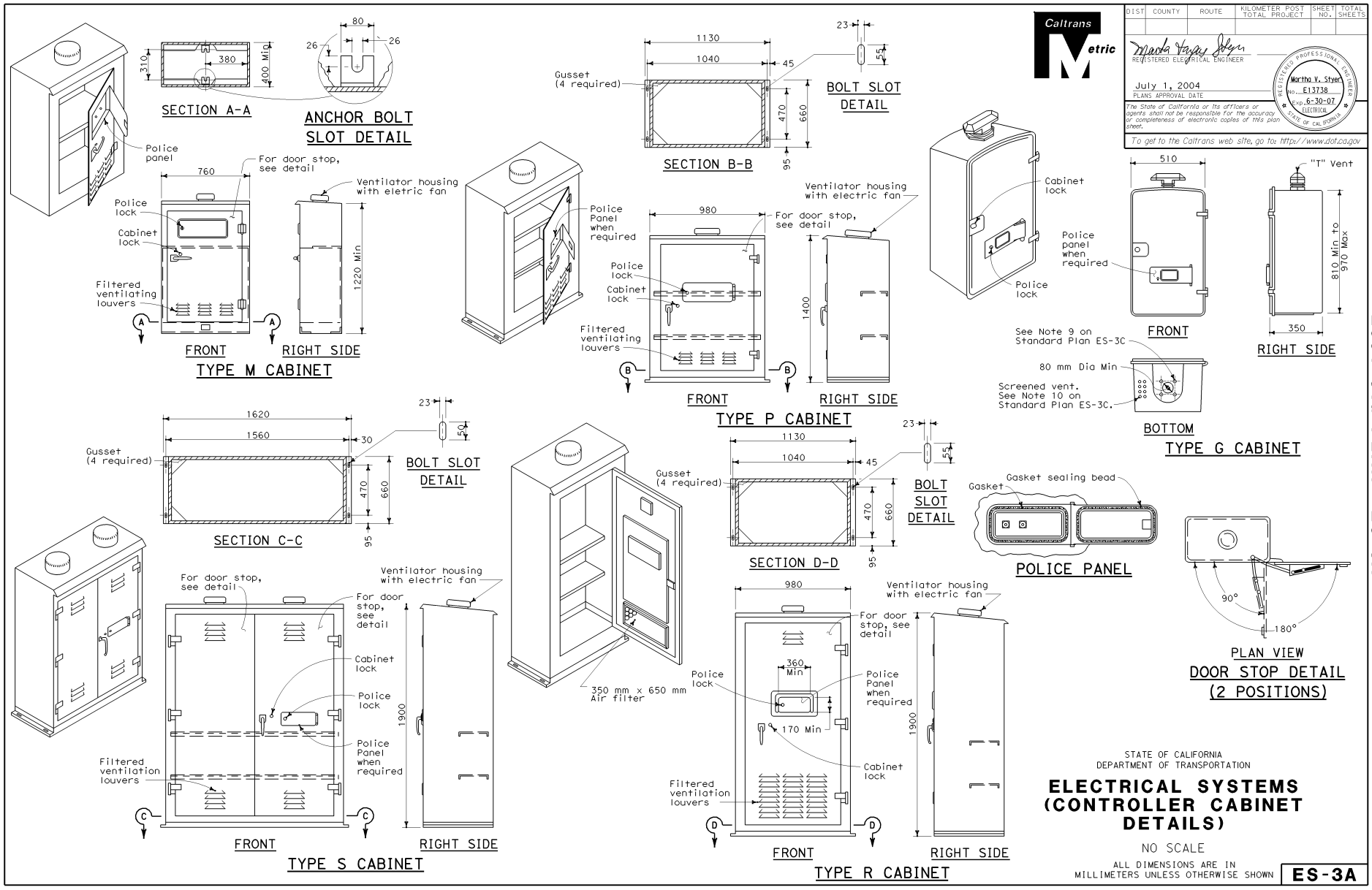

Back to Table of Contents

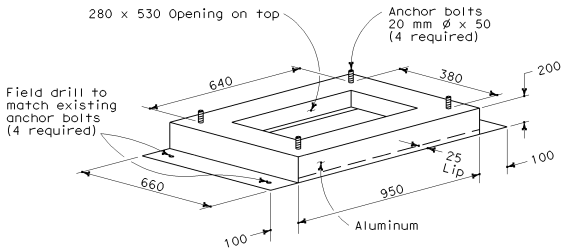

TYPE PR CABINET ADAPTER

1. Material: 4.78 thickness aluminum plate.
2. Mount adapter on Type P or Type R cabinet foundation.

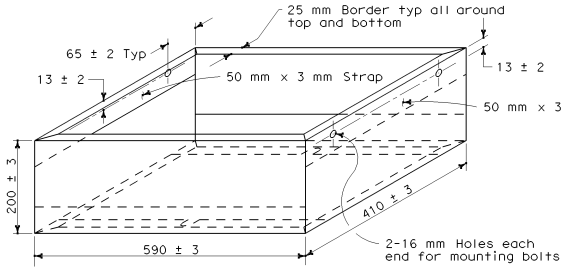

TYPE M CABINET ADAPTER

1. Mount adapter on Type M cabinet foundation.
2. Mounting bolts shall be 10 mm ø minimum size.
3. Aluminum (4.78 mm thickness).

The flasher transfer relay shall intermate with a CINCH-JONES Socket S-408-SB or equal connected as follows:

Pin No.	Circuit	Pin No.	Circuit
1	Coil	5	Common, Circuit #1
2	Coil	6	Common, Circuit #2
3	NC Circuit #1	7	NO Circuit #1
4	NC Circuit #2	8	NO Circuit #2

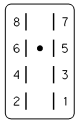

CONNECTOR SOCKET
FLASH TRANSFER RELAY

The flasher shall intermate with a CINCH-JONES Socket S-406-SB or equal connected as follows:

Pin No.	Circuit	Pin No.	Circuit
7	Load, Circuit #1	10	ac+
8	Load, Circuit #2	11	ac-
9	Chassis Ground	12	Not used

CONNECTOR SOCKET
SOLID STATE FLASHER UNIT

The Solid-state switching device shall intermate with a CINCH-JONES Socket S-2412-SB or equal connected as follows:

Pin No.	Circuit	Pin No.	Circuit
1	ac + Lights	7	Green or Walk Output
2	Chassis Ground	8	Yellow Input
3	Red or Don't Walk Output	9	dc+ (15 to 24 V)
4	Not used	10	Green or Walk Input
5	Yellow Output	11	ac-
6	Red or Don't Walk Input	12	Not used

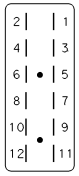

CONNECTOR SOCKET
SOLID STATE SWITCHING DEVICE

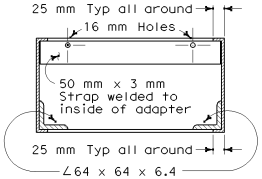

SECTION A-A

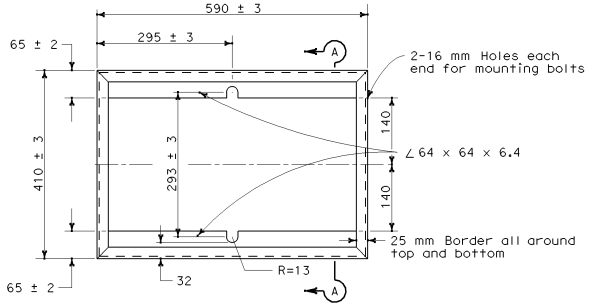

TOP VIEW

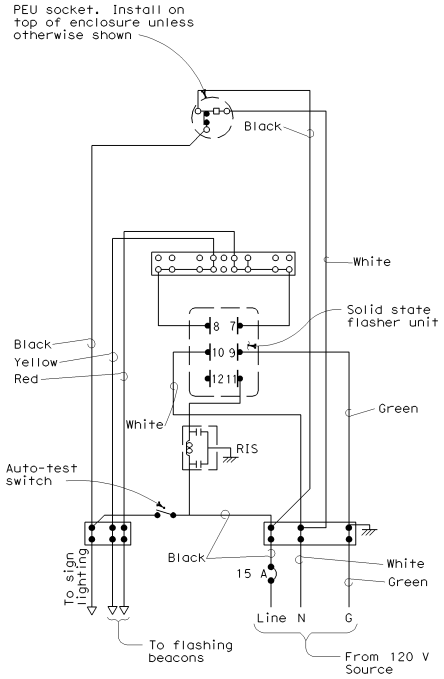

WIRING DIAGRAM
FLASHING BEACON CONTROL ASSEMBLY

STATE OF CALIFORNIA
DEPARTMENT OF TRANSPORTATION

ELECTRICAL SYSTEMS (CONTROLLER CABINET DETAILS)

NO SCALE

ALL DIMENSIONS ARE IN
MILLIMETERS UNLESS OTHERWISE SHOWN

ES-3B

Caltrans Metric

DIST	COUNTY	ROUTE	KILOMETER POST TOTAL PROJECT	SHEET NO.	TOTAL SHEETS

REGISTERED ELECTRICAL ENGINEER

July 1, 2004
PLANS APPROVAL DATE

REGISTERED PROFESSIONAL ENGINEER
Martha V. Styer
No. E13738
Exp. 6-30-07
ELECTRICAL
STATE OF CALIFORNIA

The State of California or its officers or agents shall not be responsible for the accuracy or completeness of electronic copies of this plan sheet.

To get to the Caltrans web site, go to: http://www.dot.ca.gov

07-28-04

Back to Table of Contents

DIST	COUNTY	ROUTE	KILOMETER POST TOTAL PROJECT	SHEET NO.	TOTAL SHEETS

Caltrans Metric

REGISTERED ELECTRICAL ENGINEER

July 1, 2004
PLANS APPROVAL DATE

REGISTERED PROFESSIONAL ENGINEER Martha V. Styer No. E13738 Exp. 6-30-07 ELECTRICAL STATE OF CALIFORNIA

The State of California or its officers or agents shall not be responsible for the accuracy or completeness of electronic copies of this plan sheet.

To get to the Caltrans web site, go to: http://www.dot.ca.gov

NOTES - CONTROLLER CABINETS

1. Cabinet dimensions are nominal.
2. Foundations shall be located to provide 600 mm minimum clearance between face of curb and any portion of cabinet.
3. Type G, M, P, R, S and Model 336 cabinets shall be installed with the back toward the nearest lane of traffic.
4. The controller cabinet ground bus shall be bonded to the controller equipment enclosure.
5. In unpaved areas, a raised portland cement concrete pad shall be constructed in front of each controller cabinet. Pad shall be 900 mm x 900 mm x 100 mm for Type G cabinets and shall be 900 mm x 100 mm thick x width of foundation for Types M, P, R, S and Model 336 cabinets.
6. In unpaved areas, the top of foundation for Type G, P, R and S cabinets shall be 150 mm above surrounding grade. Top of foundation for Type M or Model 336 cabinet shall be 460 mm above surrounding grade.
7. In sidewalks and other paved areas, top of foundation for Type G cabinet shall be level with surrounding grade. Top of foundation for Type P, R and S cabinets shall be 90 mm above surrounding grade.
8. The steel pedestal, base plate, bolt circle and foundation for Type G cabinet shall be the same as that shown for a Type 1-C Standard. Pedestal shall be 640 mm - 760 mm in length. Anchor bolts shall be 19 mm ø x 460 mm with a 50 mm - 90° bend. Four bolts required per cabinet.
9. Type G cabinet shall be provided with a slipfitter to permit mounting an 114 mm outside diameter pedestal. Slipfitter shall be bolted to bottom of the cabinet.
10. Type G cabinet shall be provided with 8 screened, raintight holes, 13 mm diameter or larger, in the bottom of the cabinet.
11. A 25 mm drain shall be provided through the foundation of a Type M or Model 336 cabinet. Drain pipe shall be screened.
12. See Table for cabinet and foundation dimensions; "D" = Depth, "H" = Height and "W" = Width.
13. Cabinet shelves shall be adjustable for vertical spacing and shall be removable. Type M, P, R and S cabinets shall be provided with a minimum of two shelves.
14. Anchor bolts for Type M, P, R, S and Model 336 cabinets shall be 19 mm ø x 460 mm with a 50 mm - 90° bend.
15. An approved mastic or caulking compound shall be placed on the foundation prior to placing the cabinet to seal openings between bottom of cabinet and foundation.
16. Controller units, plug-mounted equipment, shelf-mounted equipment and wall-mounted equipment shall be located to permit safe and easy removal or replacement without removing any other piece of equipment.
17. Cabinet fan may be installed at an alternate location near the top of the cabinet when approved by the Engineer.
18. Where telephone interconnect is required, a minimum of 130 mm clear vertical space shall be provided inside the cabinet for the equipment.
19. Telephone interconnect conductors shall be enclosed in a 21C or larger conduit through the foundation. Type 4 metal conduit shall be used to separate telephone and power conductors in cabinets and pedestals.
20. For Model 332, 334 and 336 cabinet details, see "Traffic signal controller equipment specifications".

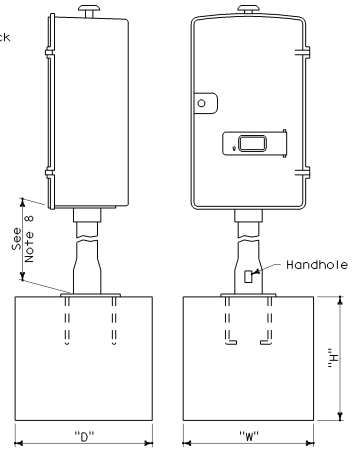

FOUNDATION FOR TYPE G CABINET

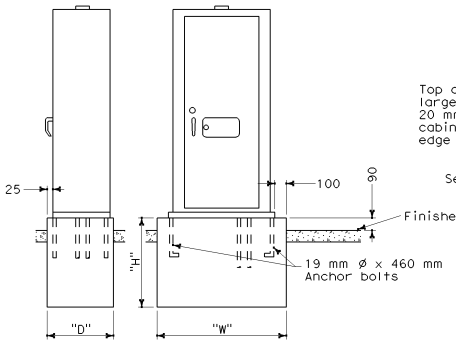

FOUNDATION FOR TYPE P, R AND S CABINETS

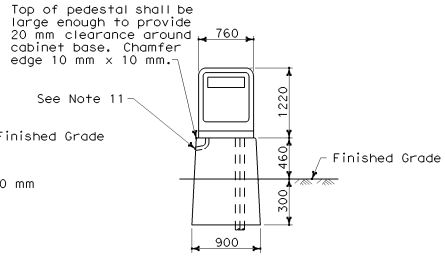

PEDESTAL FOUNDATION FOR TYPE M OR MODEL 336 CABINET

CABINET	FOUNDATION		
TYPE/ MODEL	H (mm)	W (mm)	D (mm)
G	900	600	600
M 336	SEE DETAIL ABOVE	SEE DETAIL ABOVE	560
P	460	1330	710
R	460	1330	710
S	460	1820	710

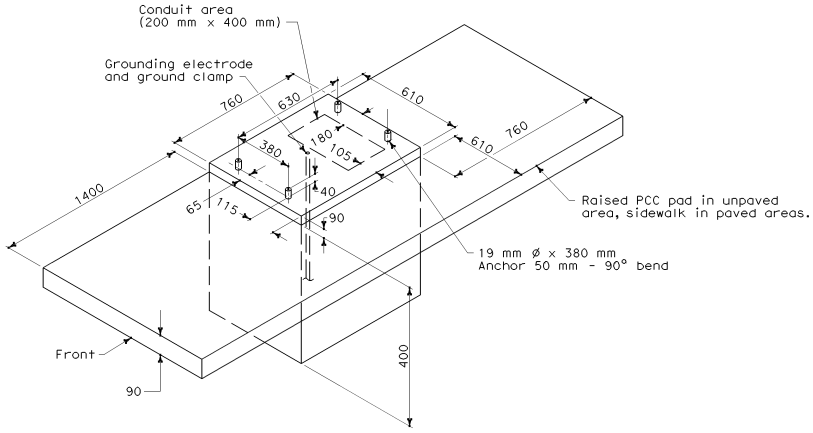

FOUNDATION DETAILS
For Model 332 and 334 cabinets

STATE OF CALIFORNIA
DEPARTMENT OF TRANSPORTATION

ELECTRICAL SYSTEMS (CONTROLLER CABINET DETAILS)

NO SCALE

ALL DIMENSIONS ARE IN MILLIMETERS UNLESS OTHERWISE SHOWN

ES-3C

2004 Std PLAN ES-3C

07-15-04

Back to Table of Contents

DIST	COUNTY	ROUTE	KILOMETER POST TOTAL PROJECT	SHEET NO.	TOTAL SHEETS

REGISTERED ELECTRICAL ENGINEER

July 1, 2004
PLANS APPROVAL DATE

REGISTERED PROFESSIONAL ENGINEER Martha V. Styer No. E13738 Exp. 6-30-07 ELECTRICAL STATE OF CALIFORNIA

The State of California or its officers or agents shall not be responsible for the accuracy or completeness of electronic copies of this plan sheet.

To get to the Caltrans web site, go to: http://www.dot.ca.gov

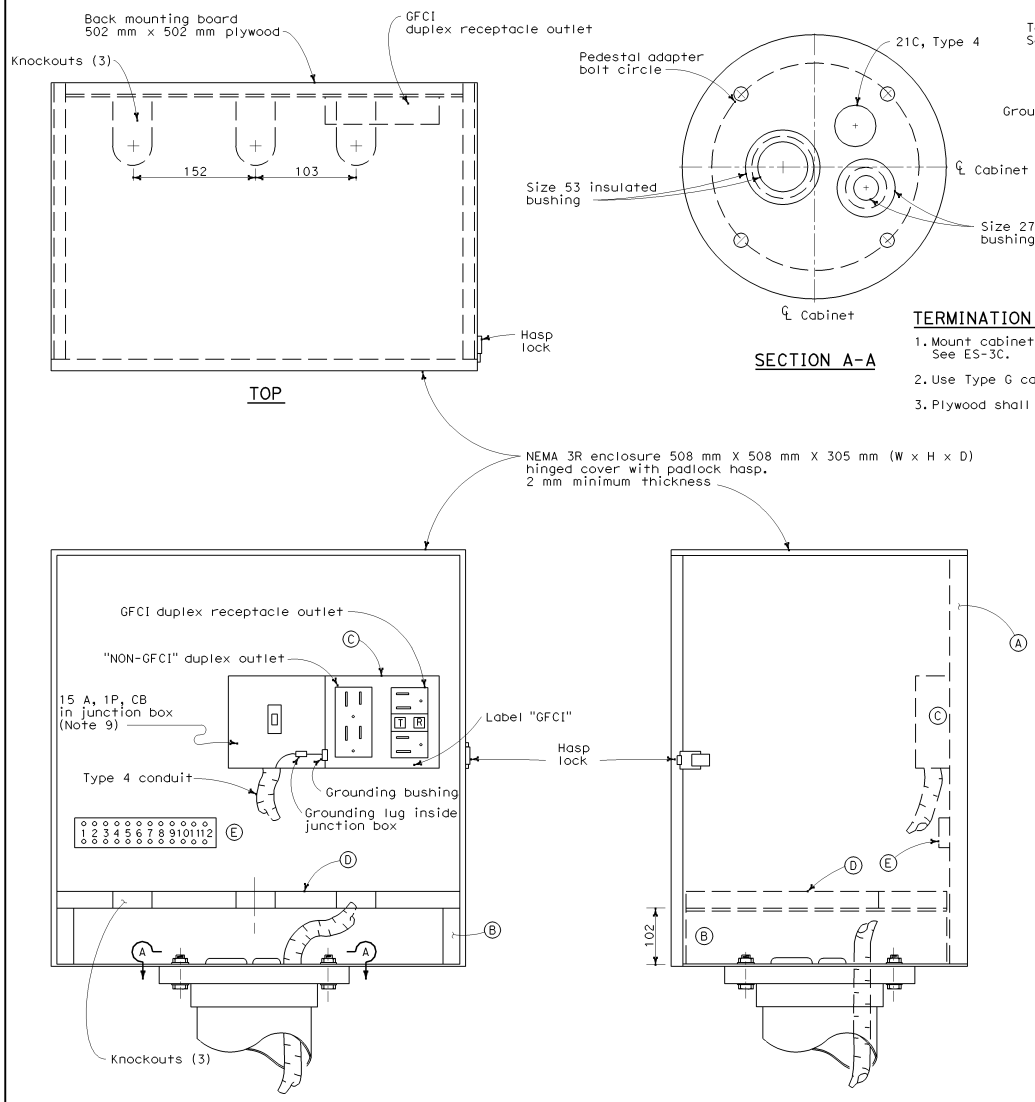

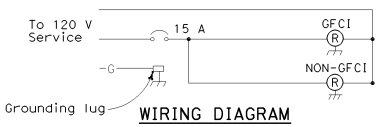

WIRING DIAGRAM

TERMINATION CABINET NOTES

1. Mount cabinet on Type G cabinet pedestal. See ES-3C.
2. Use Type G cabinet foundation.
3. Plywood shall be 13 mm thick and grade ACX.

NOTES

1. Telephone demarcation cabinet shall be furnished with mounting boards, outlet boxes, circuit breakers and outlet plates. Dimensions are nominal.
2. Telephone demarcation cabinet shall be installed with the back toward the nearest lane of traffic.
3. All conduits shall be bonded to the enclosure.
4. In unpaved areas, the top of foundation for the telephone demarcation cabinet shall be 150 mm above surrounding grade.
5. In sidewalks and other paved areas, top of foundation for the telephone demarcation cabinet shall be level with finished grade.
6. The steel pedestal, base plate, bolt circle and foundation for the telephone demarcation cabinet shall be the same as that shown for a Type 1-C Standard. Pedestal shall be 640 mm - 760 mm in length. Anchor bolts required shall be 19 mm ø x 460 mm with a 50 mm - 90° bend. Four bolts required per cabinet.
7. Telephone demarcation cabinet shall be provided with a slip fitter to permit mounting on 114 mm outside diameter pedestal. Slip fitter shall be bolted to bottom of cabinet.
8. Telephone interconnect conductors shall be enclosed in a 21C or larger conduit through the foundation. Type 4 metal conduit shall be used to separate telephone and power conductors in cabinets and pedestals.
9. Install circuit breaker inside the junction box. The circuit breaker should be operated externally without opening the junction cover.

COMPONENTS	FASTENER SCHEDULE
(A) Back mounting board	4 - 19 mm (length) wood screws
(B) Shelf supports (2)	4 - 19 mm (length) wood screws
(C) Junction box duplex outlet to backboard	4 - 13 mm (length) wood screws
(D) Bottom shelf	
(E) Terminal block, 12 positions	4 - 19 mm (length) wood screws

STATE OF CALIFORNIA
DEPARTMENT OF TRANSPORTATION

ELECTRICAL SYSTEMS (TELEPHONE DEMARCATION CABINET, TYPE A)

NO SCALE

ALL DIMENSIONS ARE IN MILLIMETERS UNLESS OTHERWISE SHOWN

ES-3D

07-15-04

Back to Table of Contents

DIST	COUNTY	ROUTE	KILOMETER POST TOTAL PROJECT	SHEET NO.	TOTAL SHEETS

Caltrans Metric

REGISTERED ELECTRICAL ENGINEER

July 1, 2004
PLANS APPROVAL DATE

REGISTERED PROFESSIONAL ENGINEER Martha V. Styer No. E13738 Exp. 6-30-07 ELECTRICAL STATE OF CALIFORNIA

The State of California or its officers or agents shall not be responsible for the accuracy or completeness of electronic copies of this plan sheet.

To get to the Caltrans web site, go to: http://www.dot.ca.gov

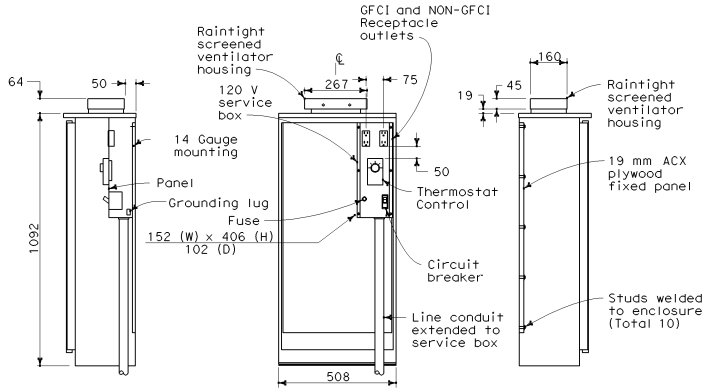

SECTION B-B FRONT VIEW SECTION A-A

(Exterior door removed for clarity)

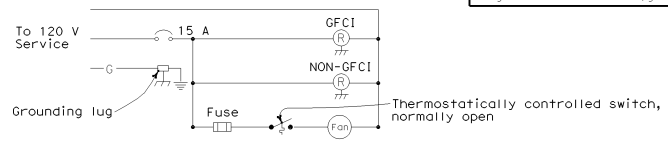

WIRING DIAGRAM

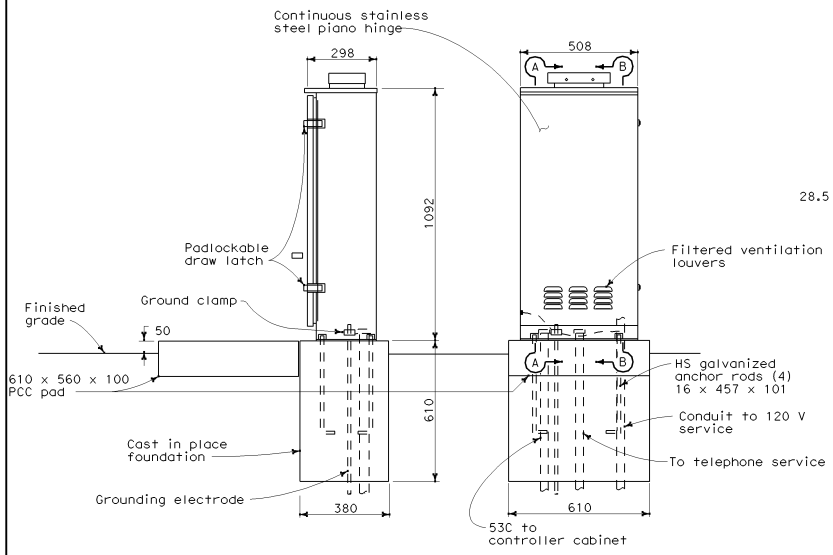

SIDE VIEW FRONT VIEW

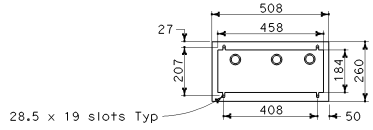

BASE PLAN

NOTES

1. Telephone demarcation cabinet shall be furnished with a mounting panel, outlets, circuit breaker and deadfront plates in place. Dimensions are nominal.
2. An approved mastic or caulking compound shall be placed on the foundation prior to placing the cabinet, to seal openings between the bottom of the cabinet and the foundation.
3. In unpaved areas, a raised PCC pad shall be placed in front of the telephone demarcation cabinet. Pad shall be 610 mm x 560 mm x 100 mm thick, with 50 mm above the finished grade.
4. All conduits shall be bonded to the enclosure.
5. Telephone demarcation cabinet:
   a) Material shall be anodized aluminum (3.2 mm thick).
   b) Fabrication shall conform to the requirements of the Standard Specifications.
   c) The exterior door shall be side hung and secured with a padlockable draw latch, the padlock hole shall be a minimum diameter of 11 mm to receive a State-furnished padlock.
   d) Ventilation louvers shall be located on the door.
   e) Fan shall be mounted in a ventilator housing.
   f) Fan shall be thermostatically controlled and adjustable to turn on between 32°C and 65°C.
   g) Fan circuit shall be fused at 175 percent of the fan motor capacity.
   h) Fan capacity shall be at least 0.7 m^3 per minute.
   i) Fasten fixed mounting panels with nuts, lock and flat washers to 5 mm ø x 25 mm studs welded to enclosure.

STATE OF CALIFORNIA
DEPARTMENT OF TRANSPORTATION

ELECTRICAL SYSTEMS (TELEPHONE DEMARCATION CABINET, TYPE B)

NO SCALE

ALL DIMENSIONS ARE IN MILLIMETERS UNLESS OTHERWISE SHOWN

ES-3E

2004 Std PLAN ES-3E

07-07-04

Back to Table of Contents

DIST	COUNTY	ROUTE	KILOMETER POST TOTAL PROJECT	SHEET NO.	TOTAL SHEETS

REGISTERED ELECTRICAL ENGINEER

July 1, 2004
PLANS APPROVAL DATE

REGISTERED PROFESSIONAL ENGINEER Martha V. Styer No. E13738 Exp. 6-30-07 ELECTRICAL STATE OF CALIFORNIA

The State of California or its officers or agents shall not be responsible for the accuracy or completeness of electronic copies of this plan sheet.

To get to the Caltrans web site, go to: http://www.dot.ca.gov

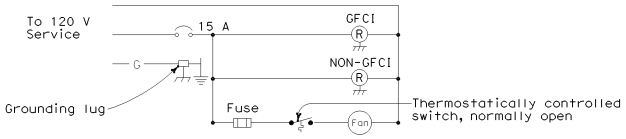

WIRING DIAGRAM

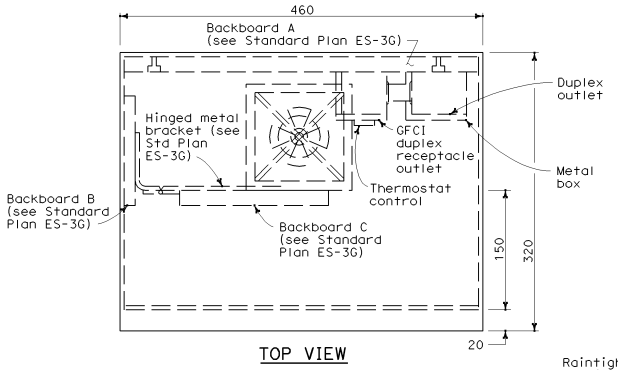

TOP VIEW

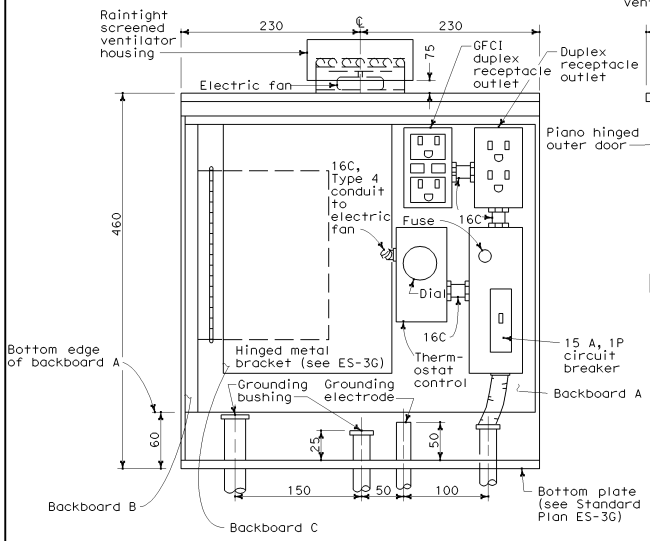

FRONT VIEW
(Outer door removed)

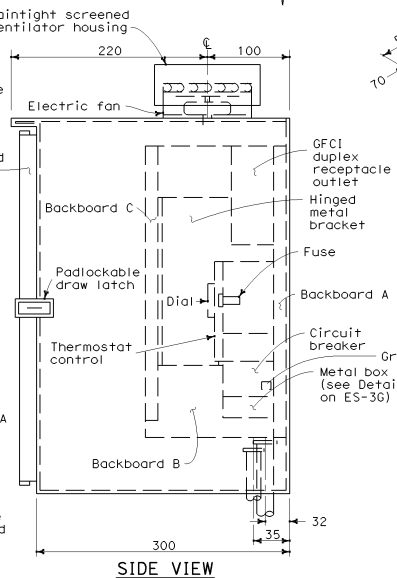

SIDE VIEW

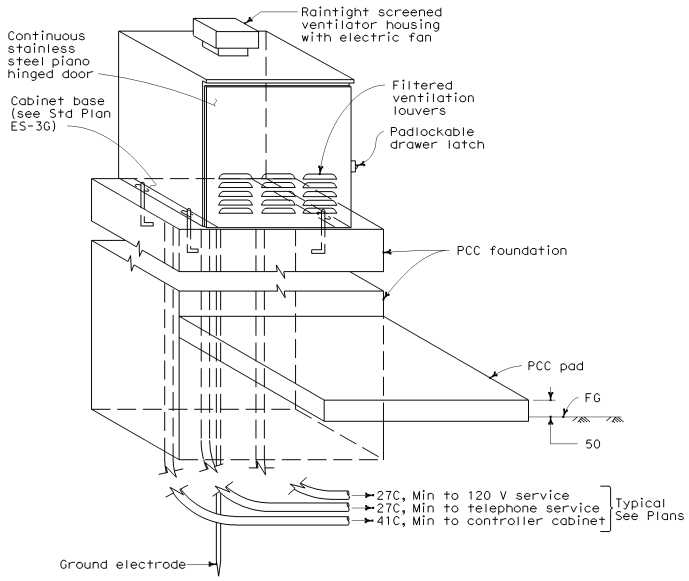

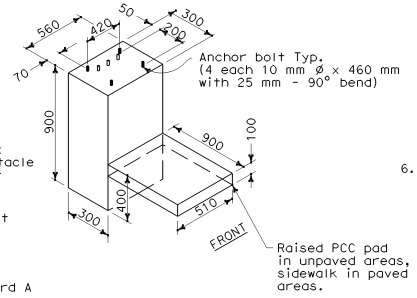

FOUNDATION DETAILS

NOTES

1. Telephone demarcation cabinet shall be furnished with mounting boards, thermostat, fan, outlet box, circuit breaker and outlet plate. Dimensions are nominal.
2. An approved mastic or caulking compound shall be placed on the foundation prior to placing the cabinet to seal openings between bottom of cabinet and foundation.
3. In unpaved areas, a raised PCC pad shall be placed in front of the telephone demarcation cabinet.
4. All conduits shall be bonded to the enclosure.
5. Telephone demarcation cabinet:
   a) Material shall be anodized aluminum (3.2 mm thick).
   b) Fabrication shall conform to the requirements of the Standard Specifications.
   c) Ventilation louvers shall be located in door.
   d) Door shall be lockable with padlock.
   e) Fan shall be mounted in a ventilator housing.
   f) Fan capacity shall be at least 0.7 m^3 per minute.
   g) Fan shall be thermostatically controlled and adjustable to turn on between 32°C and 65°C.
   h) Fan circuit shall be fused at 175 percent of the fan motor capacity.
6. Hardware for fastening of mounting boards:
   a) Fasten backboard A and backboard B to telephone demarcation cabinet with 5 mm ø x 20 mm stainless steel carriage bolts (8 required).
   b) Fasten hinged metal bracket to backboard B and backboard C to hinged metal bracket with number 10 mm x 20 mm wood screws (9 required).

STATE OF CALIFORNIA
DEPARTMENT OF TRANSPORTATION

ELECTRICAL SYSTEMS (TELEPHONE DEMARCATION CABINET, TYPE C)

NO SCALE

ALL DIMENSIONS ARE IN MILLIMETERS UNLESS OTHERWISE SHOWN

ES-3F

07-15-04

Back to Table of Contents

DIST	COUNTY	ROUTE	KILOMETER POST TOTAL PROJECT	SHEET NO.	TOTAL SHEETS

Caltrans Metric

REGISTERED ELECTRICAL ENGINEER

July 1, 2004
PLANS APPROVAL DATE

REGISTERED PROFESSIONAL ENGINEER
Martha V. Styer
No. E13738
Exp. 6-30-07
ELECTRICAL
STATE OF CALIFORNIA

The State of California or its officers or agents shall not be responsible for the accuracy or completeness of electronic copies of this plan sheet.

To get to the Caltrans web site, go to: http://www.dot.ca.gov

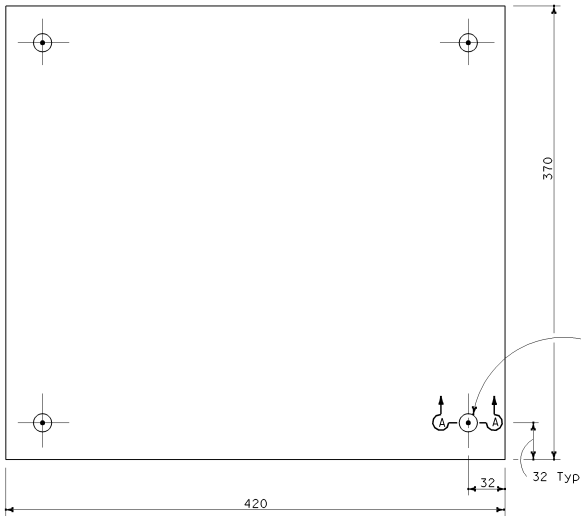

BACKBOARD A
(Material: 18 mm A-C plywood)

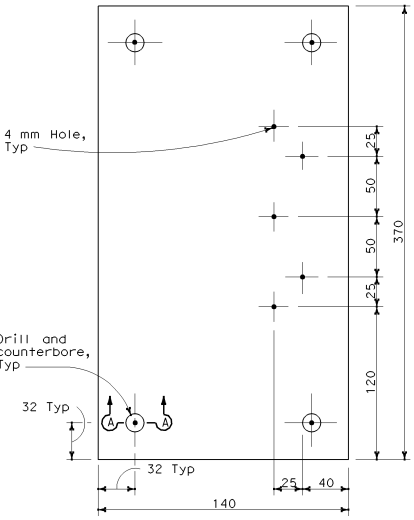

BACKBOARD B
(Material: 18 mm A-C plywood)

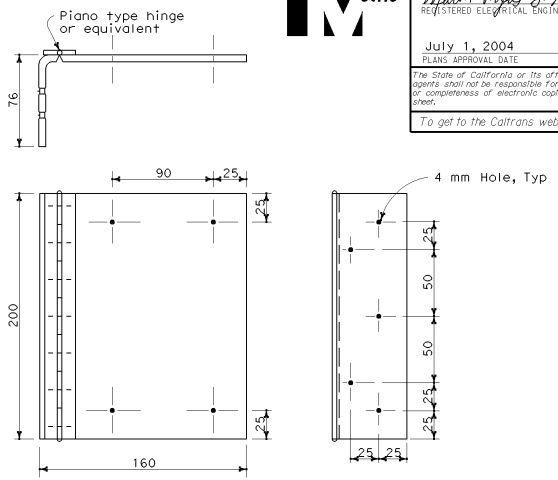

HINGED METAL BRACKET

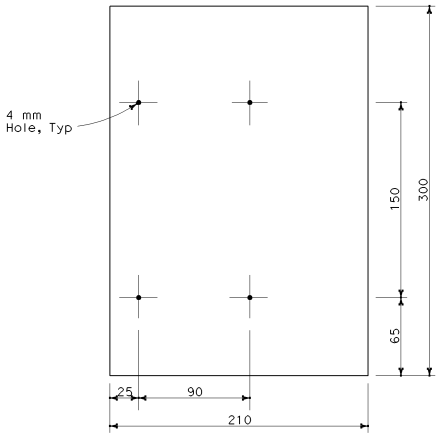

BACKBOARD C
(Material: 18 mm A-C plywood)

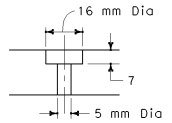

SECTION A-A

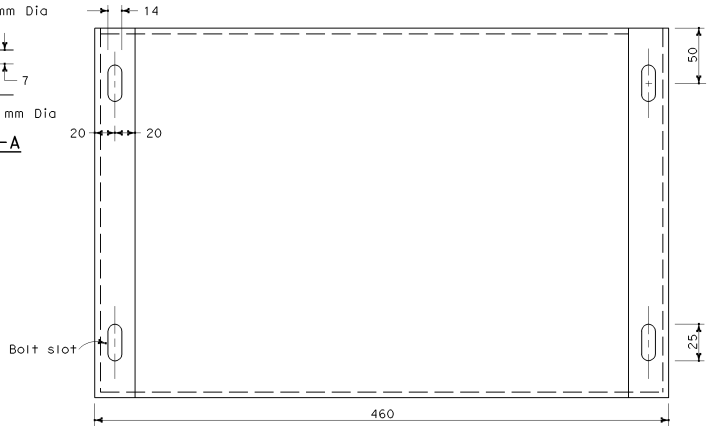

CABINET BASE
(Material: 3.42 mm)

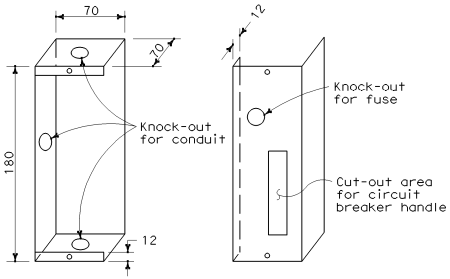

METAL BOX DETAIL
(Material: 1.71 mm)

STATE OF CALIFORNIA
DEPARTMENT OF TRANSPORTATION

ELECTRICAL SYSTEMS (TELEPHONE DEMARCATION CABINET, TYPE C DETAILS)

NO SCALE

ALL DIMENSIONS ARE IN MILLIMETERS UNLESS OTHERWISE SHOWN

ES-3G

07-07-04

Back to Table of Contents

DIST	COUNTY	ROUTE	KILOMETER POST TOTAL PROJECT	SHEET NO.	TOTAL SHEETS

Caltrans Metric

REGISTERED ELECTRICAL ENGINEER

July 1, 2004
PLANS APPROVAL DATE

REGISTERED PROFESSIONAL ENGINEER
Martha V. Styer
No. E13738
Exp. 6-30-07
ELECTRICAL
STATE OF CALIFORNIA

The State of California or its officers or agents shall not be responsible for the accuracy or completeness of electronic copies of this plan sheet.

To get to the Caltrans web site, go to: http://www.dot.ca.gov

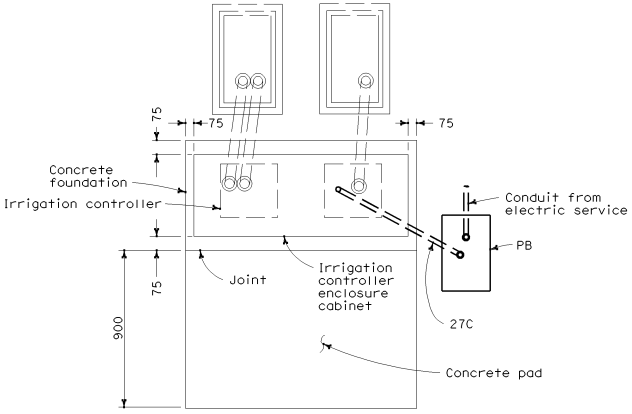

PLAN

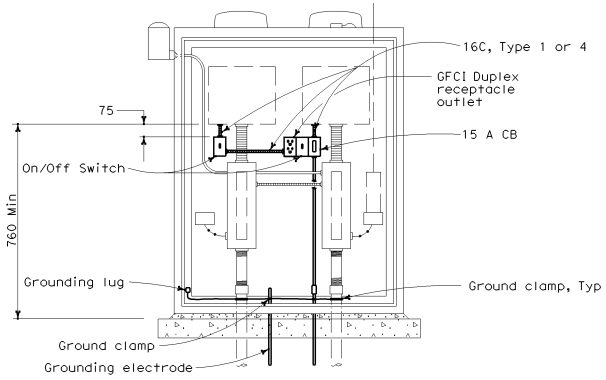

ELEVATION

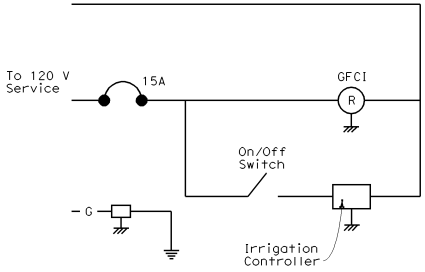

IRRIGATION CONTROLLER ENCLOSURE CABINET WIRING DIAGRAM (TYPICAL)

NOTE

Duplex convenience receptacles shall have ground fault circuit interrupter as defined by the Code. Circuit interruption shall occur on 6 mA of ground fault current and shall not occur on less than 4 mA. Receptacles shall be installed in a weatherproof housing with rainproof lift covers.

STATE OF CALIFORNIA
DEPARTMENT OF TRANSPORTATION

ELECTRICAL SYSTEMS (IRRIGATION CONTROLLER ENCLOSURE CABINET)

NO SCALE

ALL DIMENSIONS ARE IN MILLIMETERS UNLESS OTHERWISE SHOWN

ES-3H

07-15-04

2004 Std PLAN ES-3H

Back to Table of Contents

DIST	COUNTY	ROUTE	KILOMETER POST TOTAL PROJECT	SHEET NO.	TOTAL SHEETS

Caltrans Metric

REGISTERED ELECTRICAL ENGINEER

July 1, 2004
PLANS APPROVAL DATE

REGISTERED PROFESSIONAL ENGINEER
Martha V. Styer
No. E13738
Exp. 6-30-07
ELECTRICAL
STATE OF CALIFORNIA

The State of California or its officers or agents shall not be responsible for the accuracy or completeness of electronic copies of this plan sheet.

To get to the Caltrans web site, go to: http://www.dot.ca.gov

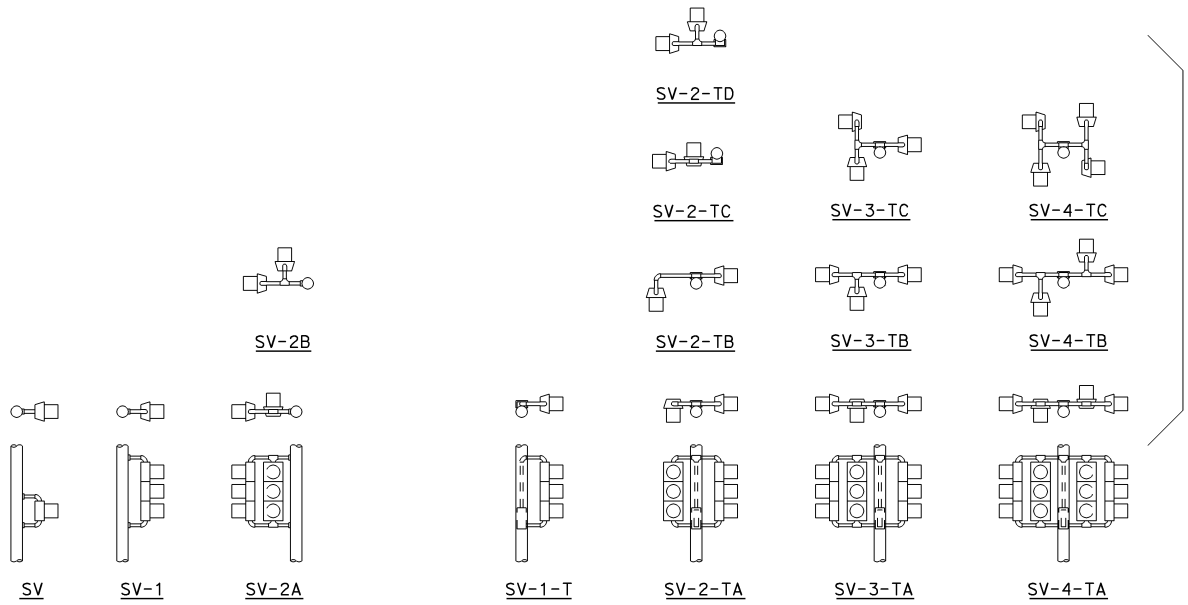

SIDE MOUNTINGS

ABBREVIATIONS

TV	Top mounted vehicle signals
SV	Side mounted vehicle signals
T	Terminal compartment
1, 2, 3, 4	Number of signal faces (3 - section, unless otherwise indicated)
A, B, C, D	Configuration of signals

NOTES

1. Mountings shall be oriented to provide maximum horizontal clearance to adjacent roadway.
2. Bracket arms shall be long enough to permit proper alignment of signals and backplate installation.
3. See Standard Plans ES-4D and ES-4E for attachment fitting details.

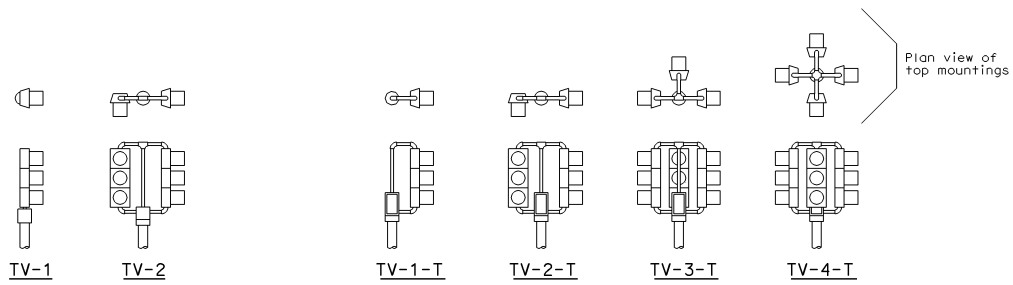

TOP MOUNTINGS

VEHICULAR SIGNALS AND MOUNTINGS

STATE OF CALIFORNIA
DEPARTMENT OF TRANSPORTATION

ELECTRICAL SYSTEMS (SIGNAL HEADS AND MOUNTINGS)

NO SCALE

ALL DIMENSIONS ARE IN MILLIMETERS UNLESS OTHERWISE SHOWN

ES-4A

05-24-04

Back to Table of Contents

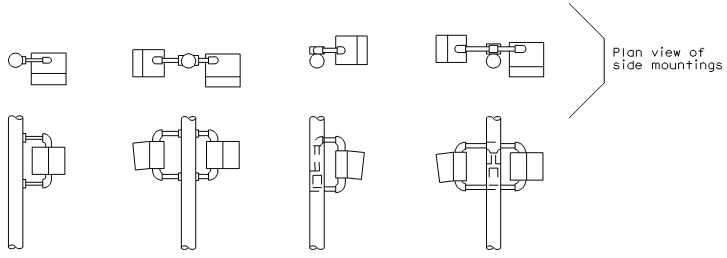

SIDE MOUNTINGS

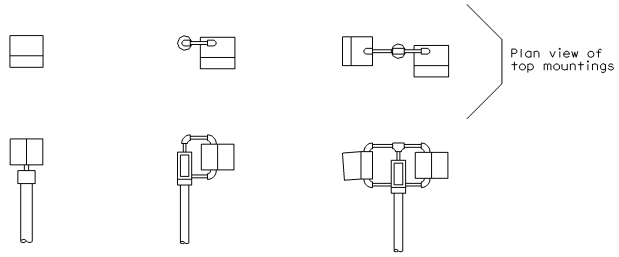

TOP MOUNTINGS

PEDESTRIAN SIGNALS AND MOUNTINGS

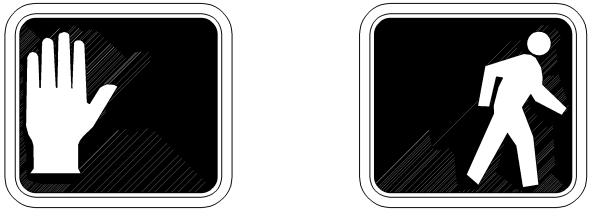

PEDESTRIAN SIGNAL FACE

SYMBOL TYPE

"METER ON" SIGN

NOTES

1. Mounting shall be oriented to provide maximum horizontal clearance to adjacent roadway.
2. Bracket arms shall be long enough to permit proper alignment of signals.
3. See Standard Plan ES-4D for attachment fittings details.

ABBREVIATIONS

TP	Top mounted pedestrian signal
SP	Side mounted pedestrian signal
T	Terminal compartment
1,2	Number of signal faces

Caltrans Metric

DIST	COUNTY	ROUTE	KILOMETER POST TOTAL PROJECT	SHEET NO.	TOTAL SHEETS

REGISTERED ELECTRICAL ENGINEER

July 1, 2004
PLANS APPROVAL DATE

REGISTERED PROFESSIONAL ENGINEER Martha V. Styer NO. E13738 Exp. 6-30-07 ELECTRICAL STATE OF CALIFORNIA

The State of California or its officers or agents shall not be responsible for the accuracy or completeness of electronic copies of this plan sheet.

To get to the Caltrans web site, go to: http://www.dot.ca.gov

STATE OF CALIFORNIA
DEPARTMENT OF TRANSPORTATION

ELECTRICAL SYSTEMS (SIGNAL HEADS AND MOUNTINGS)

NO SCALE

ALL DIMENSIONS ARE IN MILLIMETERS UNLESS OTHERWISE SHOWN

ES-4B

07-15-04

2004 Std PLAN ES-4B

Back to Table of Contents

VISORS

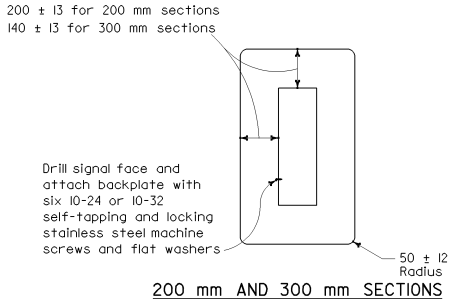

200 mm AND 300 mm SECTIONS

BACKPLATE

1.5 mm minimum thickness 3001-14 aluminum, or plastic when specified

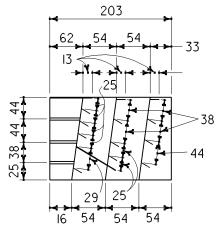

SECTION A-A

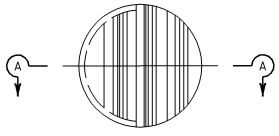

FRONT VIEW

DIRECTIONAL LOUVER

Directional louvers shall be oriented as directed by the Engineer and secured in place with one plated brass machine screw and nut.

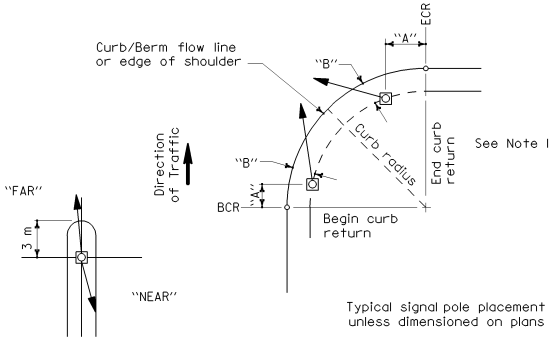

SIGNAL STANDARD PLACEMENT DIMENSIONS AND EQUIPMENT LOCATIONS

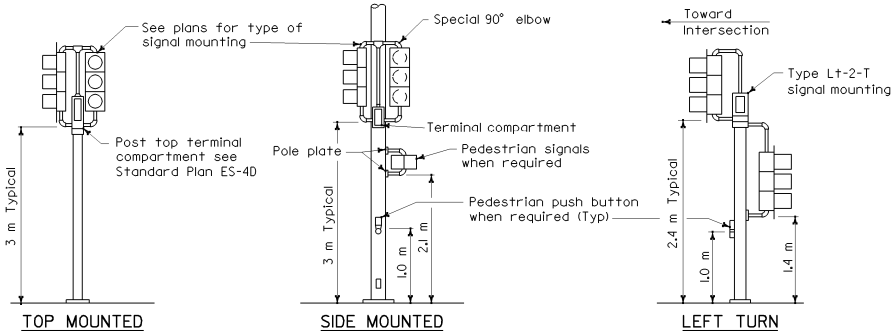

TOP MOUNTED SIGNALS (TV)

Type 1-A, 1-B, 1-C and 1-D standard as indicated on the plans

SIDE MOUNTED SIGNALS (SV AND SP)

Normally used on standards with luminaire or signal mast arm

LEFT TURN LANE SIGNAL

Type 1-A, 1-B, 1-C and 1-D standard as indicated on plans

TYPICAL SIGNAL INSTALLATIONS

NOTE

1. For "A" and "B" dimensions, see Pole Schedule, or as directed by the Engineer.

Caltrans Metric

DIST	COUNTY	ROUTE	KILOMETER POST TOTAL PROJECT	SHEET NO.	TOTAL SHEETS

REGISTERED ELECTRICAL ENGINEER

July 1, 2004
PLANS APPROVAL DATE

REGISTERED PROFESSIONAL ENGINEER Martha V. Styer No. E13738 Exp. 6-30-07 ELECTRICAL STATE OF CALIFORNIA

The State of California or its officers or agents shall not be responsible for the accuracy or completeness of electronic copies of this plan sheet.

To get to the Caltrans web site, go to: http://www.dot.ca.gov

STATE OF CALIFORNIA
DEPARTMENT OF TRANSPORTATION

ELECTRICAL SYSTEMS (SIGNAL HEADS AND MOUNTINGS)

NO SCALE

ALL DIMENSIONS ARE IN MILLIMETERS UNLESS OTHERWISE SHOWN

ES-4C

07-08-04

Back to Table of Contents

DIST	COUNTY	ROUTE	KILOMETER POST TOTAL PROJECT	SHEET NO.	TOTAL SHEETS

Caltrans Metric

REGISTERED ELECTRICAL ENGINEER

July 1, 2004
PLANS APPROVAL DATE

REGISTERED PROFESSIONAL ENGINEER Martha V. Styer No. E13738 Exp. 6-30-07 ELECTRICAL STATE OF CALIFORNIA

The State of California or its officers or agents shall not be responsible for the accuracy or completeness of electronic copies of this plan sheet.

To get to the Caltrans web site, go to: http://www.dot.ca.gov

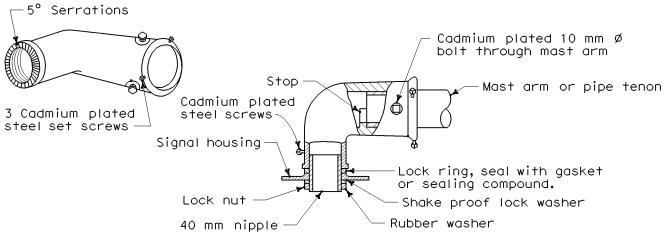

MAST ARM MOUNTING - TYPE "MAT"

For 2 NPS pipe, see Note 1.

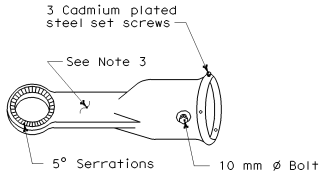

MAST ARM MOUNTING - TYPE "MAS"

For 2 NPS pipe. See Note 1.

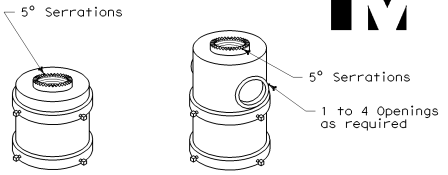

For one mounting For multiple mountings

TOP MOUNTINGS

For 4 NPS pipe, see Note 2.

SIGNAL SLIP FITTERS

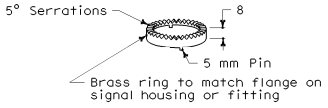

LOCK RING

Use where locking ring is not integral with signal housing or fitting.

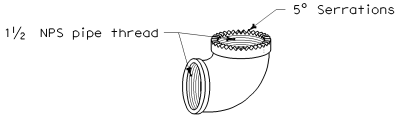

SPECIAL 90° ELBOW

One for each signal head, except those with special slip fitter mounting

MISCELLANEOUS MOUNTING HARDWARE

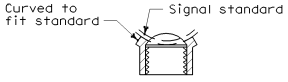

SECTION A-A

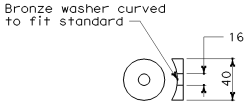

WASHER DETAIL "C"

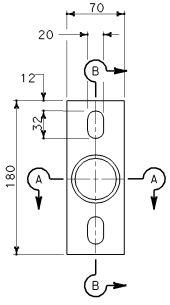

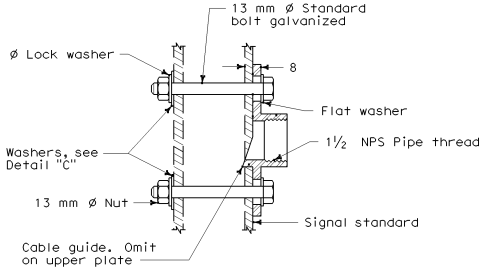

SECTION B-B

POLE PLATE

For side mountings

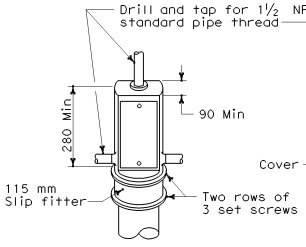

TOP MOUNTING

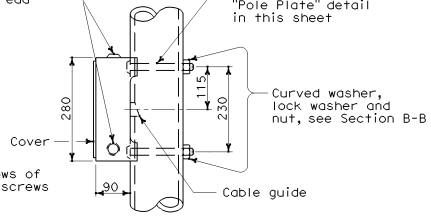

SIDE MOUNTING

TERMINAL COMPARTMENTS

NOTES

1. After mast arm signal has been plumbed and secured, drill 11 mm hole through mast arm tenon in line with slip fitter hole. Place a cadmium plated 10 mm ø galvanized bolt with washer under bolt head through hole and secure with washer, nut, and locknut. Seal openings between mast arm mountings and mast arm with mastic.
2. (a) Threaded top mounted slip fitter openings shall be 1½ NPS.
   (b) Serrations in fittings shall match those on bottom of signal heads or in lock ring.
   (c) Top opening shall be offset when backplate is used.
3. Wireway shall have a cross section area of 600 mm² minimum. Minimum width of 13 mm.

STATE OF CALIFORNIA
DEPARTMENT OF TRANSPORTATION

ELECTRICAL SYSTEMS (SIGNAL HEADS AND MOUNTINGS)

NO SCALE

ALL DIMENSIONS ARE IN MILLIMETERS UNLESS OTHERWISE SHOWN

ES-4D

07-07-04

Back to Table of Contents

DIST	COUNTY	ROUTE	KILOMETER POST TOTAL PROJECT	SHEET NO.	TOTAL SHEETS

Caltrans Metric

REGISTERED ELECTRICAL ENGINEER

July 1, 2004
PLANS APPROVAL DATE

REGISTERED PROFESSIONAL ENGINEER Martha V. Styer No. E13738 Exp. 6-30-07 ELECTRICAL STATE OF CALIFORNIA

The State of California or its officers or agents shall not be responsible for the accuracy or completeness of electronic copies of this plan sheet.

To get to the Caltrans web site, go to: http://www.dot.ca.gov

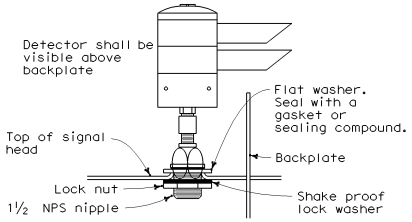

EMERGENCY VEHICLE DETECTOR MOUNTING

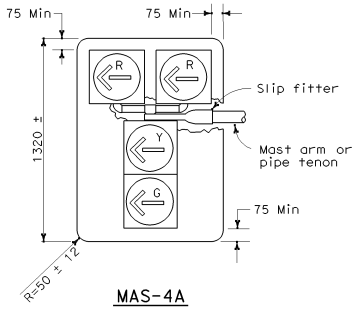

MAS-4A

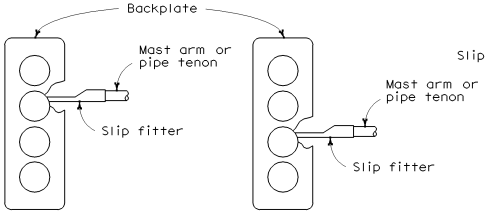

MAS-4B MAS-4C

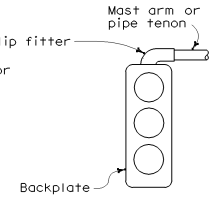

MAT

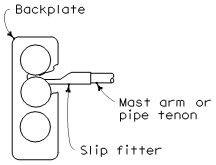

MAS

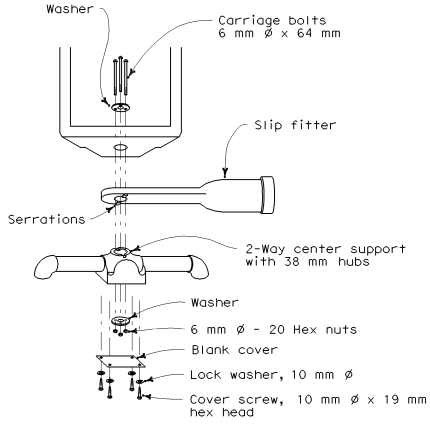

DETAIL A

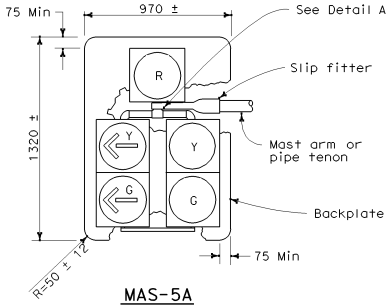

MAS-5A

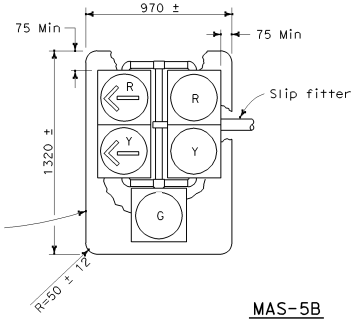

MAS-5B

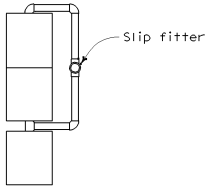

SIDE VIEW

MAST ARM MOUNTINGS

STATE OF CALIFORNIA
DEPARTMENT OF TRANSPORTATION

ELECTRICAL SYSTEMS (SIGNAL FACES AND MOUNTINGS)

NO SCALE

ALL DIMENSIONS ARE IN MILLIMETERS UNLESS OTHERWISE SHOWN

ES-4E

05-24-04

Back to Table of Contents

DIST	COUNTY	ROUTE	KILOMETER POST TOTAL PROJECT	SHEET NO.	TOTAL SHEETS

REGISTERED ELECTRICAL ENGINEER

July 1, 2004
PLANS APPROVAL DATE

REGISTERED PROFESSIONAL ENGINEER Martha V. Styer No. E13738 Exp. 6-30-07 ELECTRICAL STATE OF CALIFORNIA

The State of California or its officers or agents shall not be responsible for the accuracy or completeness of electronic copies of this plan sheet.

To get to the Caltrans web site, go to: http://www.dot.ca.gov

Caltrans Metric

LOOP INSTALLATION PROCEDURE

1. Loops shall be centered in lanes.
2. Saw slots in pavement for loop conductors as shown in details.
3. Distance between side of loop and a lead-in saw cut from adjacent detectors shall be 600 mm minimum. Distance between lead-in saw cuts shall be 150 mm minimum.
4. Bottom of saw slot shall be smooth with no sharp edges.
5. Slots shall be washed until clean, blown out and thoroughly dried before installing loop conductors.
6. Adjacent loops on the same sensor unit channel shall be wound in opposite directions.
7. Identify and tag loop circuit pairs in the pull box with loop number, start (S) and finish (F) of conductor. Identify and tag lead-in-cable with sensor number and phase.
8. Install loop conductor in slot using a 5 mm to 6 mm thick wood paddle. Hold loop conductors with wood paddles (at the bottom of the sawed slot) during sealant placement.
9. No more than 2 twisted pairs shall be installed in one sawed slot.
10. Allow additional 1.5 m of slack length of conductor for the lead-in run to pull box.
11. The additional length of each conductor for each loop shall be twisted together into a pair (6 turns per meter minimum) before being placed in the slot and conduit leading to pull box.
12. Test each loop circuit for continuity, circuit resistance and insulation resistance at the pull box before filling slots.
13. Fill slots as shown in details.
14. Splice loop conductors to lead-in cable. Splices shall be soldered.
15. End of lead-in-cable and Type 2 loop conductor shall be waterproofed prior to installing in conduit to prevent moisture from entering the cable.
16. Lead-in-cable shall not be spliced between the pull box and the controller cabinet terminals.
17. Test each loop circuit for continuity, circuit resistance and insulation resistance at the controller cabinet location.
18. Where loop conductors are not to be spliced to a lead-in-cable, the ends of the conductors shall be taped and waterproofed with electrical insulating coating.

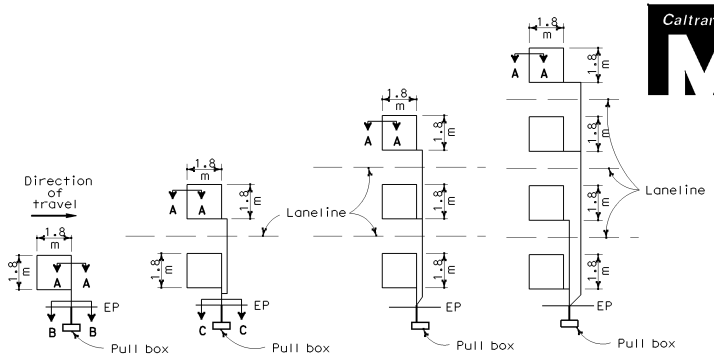

TYPE 1A INSTALLATION | TYPE 2A INSTALLATION | TYPE 3A INSTALLATION | TYPE 4A INSTALLATION

SAWCUT DETAILS

(Type A loop detector configurations illustrated)

1. 1A thru 4A = 1 Type A loop configuration in each lane.
2. 1B thru 4B = 1 Type B loop configuration in each lane.
3. 1C = 1 Type C loop configuration entering lanes as required.
4. 1D thru 4D = 1 Type D loop configuration in each lane.
5. 1E thru 4E = 1 Type E loop configuration in each lane.
6. 1O thru 4O = 1 Type O loop configuration in each lane. (Use Type A, B, C, D, E or O loop detector configurations only when specified or shown on plans)

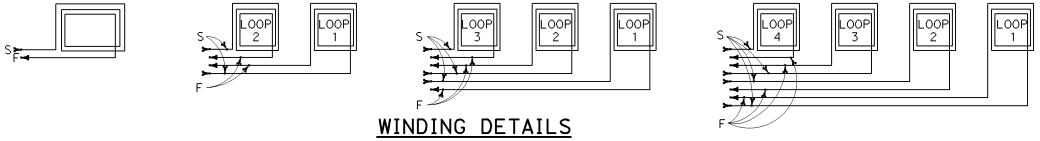

WINDING DETAILS

See Notes 6 and 7

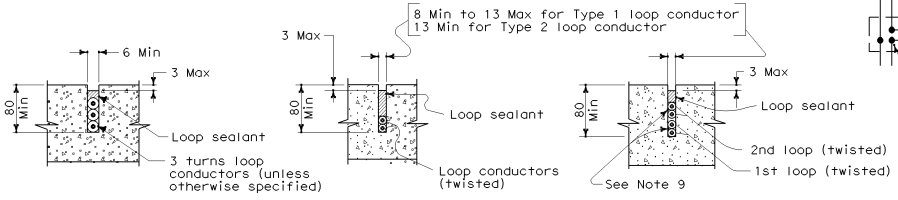

SECTION A-A | SECTION B-B | SECTION C-C

SLOT DETAILS - TYPE 1 AND TYPE 2 LOOP CONDUCTOR

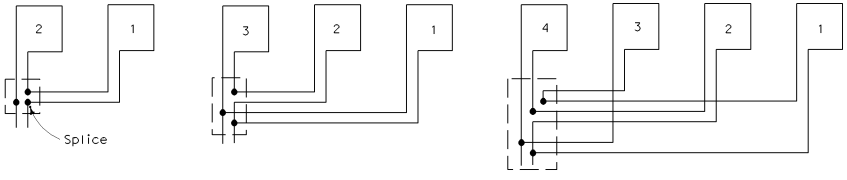

TYPICAL LOOP CONNECTIONS

(Dashed lines represent the pull box)

STATE OF CALIFORNIA
DEPARTMENT OF TRANSPORTATION

ELECTRICAL SYSTEMS (DETECTORS)

NO SCALE

ALL DIMENSIONS ARE IN MILLIMETERS UNLESS OTHERWISE SHOWN

ES-5A

2004 Std PLAN ES-5A

07-15-04

Back to Table of Contents

DIST	COUNTY	ROUTE	KILOMETER POST TOTAL PROJECT	SHEET NO.	TOTAL SHEETS

Caltrans Metric

REGISTERED ELECTRICAL ENGINEER

July 1, 2004
PLANS APPROVAL DATE

REGISTERED PROFESSIONAL ENGINEER Martha V. Styer No. E13738 Exp. 6-30-07 ELECTRICAL STATE OF CALIFORNIA

The State of California or its officers or agents shall not be responsible for the accuracy or completeness of electronic copies of this plan sheet.

To get to the Caltrans web site, go to: http://www.dot.ca.gov

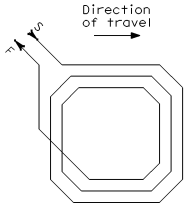

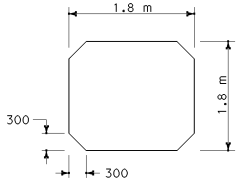

WINDING DETAIL SAWCUT DETAIL

TYPE A LOOP DETECTOR CONFIGURATION

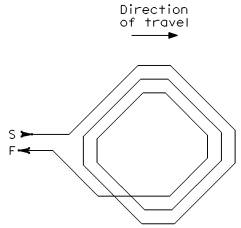

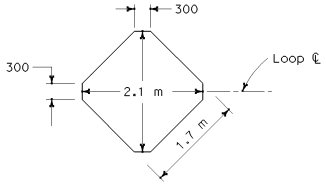

WINDING DETAIL SAWCUT DETAIL

TYPE B LOOP DETECTOR CONFIGURATION

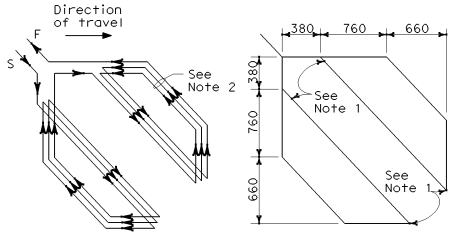

WINDING DETAIL SAWCUT DETAIL

TYPE D LOOP DETECTOR CONFIGURATION

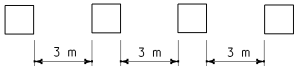

TYPICAL TYPE A INSTALLATION

Single Lane

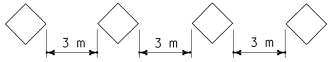

TYPICAL TYPE B INSTALLATION

Single Lane

NOTES

1. Round corners of acute angle sawcuts to prevent damage to conductors.
2. Install 3 turns when only one Type D loop is on a sensor unit channel. Install 5 turns when one Type D loop is connected with 3 additional 1.8 m x 1.8 m loops on a sensor unit.

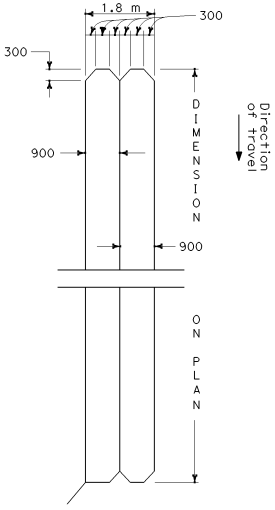

WINDING DETAIL SAWCUT DETAIL

TYPE C LOOP DETECTOR CONFIGURATION

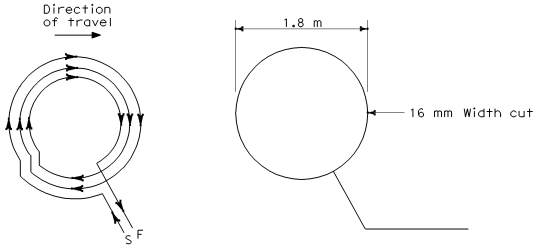

WINDING DETAIL SAWCUT DETAIL

TYPE E LOOP DETECTOR CONFIGURATION

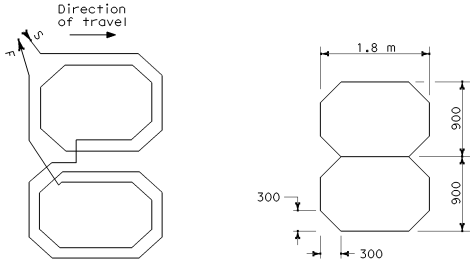

WINDING DETAIL SAWCUT DETAIL

TYPE Q LOOP DETECTOR CONFIGURATION

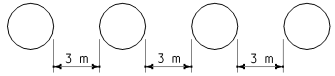

TYPICAL TYPE E INSTALLATION

Single Lane

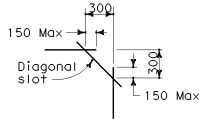

PLAN VIEW OF DIAGONAL SLOT AT CORNERS

STATE OF CALIFORNIA
DEPARTMENT OF TRANSPORTATION

ELECTRICAL SYSTEMS (DETECTORS)

NO SCALE

ALL DIMENSIONS ARE IN MILLIMETERS UNLESS OTHERWISE SHOWN

ES-5B

07-15-04

Back to Table of Contents

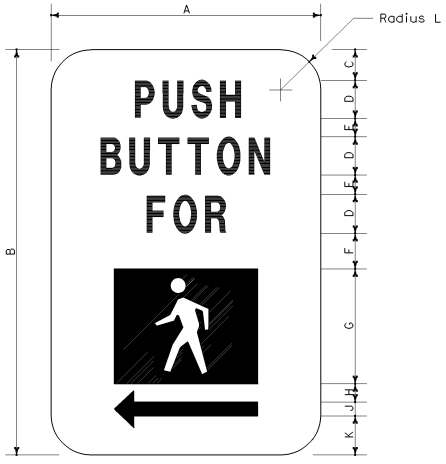

ALTERNATIVE SYMBOL AND ARROW DIRECTIONS:
LEFT, RIGHT OR BOTH

LEFT RIGHT BOTH

SIGN DIMENSIONS (mm)											
	A	B	C	D	E	F	G	H	J	K	L
Nominal	130	190	15	20	10	12	50	10	6	17	20

NOTE
Color of legend and arrow are black.
Color of background and symbol are white.

PEDESTRIAN PUSH BUTTON SIGNS

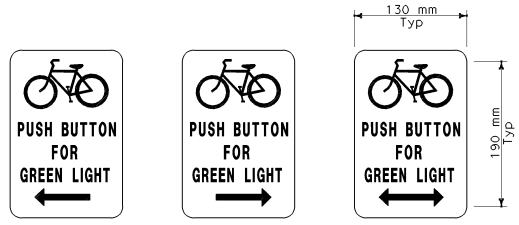

LEFT RIGHT BOTH

FOR BICYCLE LANES
(Use only when specified)
Black legend on white background

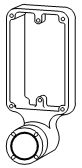

TYPE B

TYPE C
(Use only when specified)

PEDESTRIAN PUSH BUTTONS

NOTES

1. Back casting shape to fit curvature of post.
2. Provide cover fitting for top of post, when PPB is mounted on pedestrian push button post.
3. Install push button on crosswalk side of standard.
4. Actuator shall be 50 mm, minimum in diameter.

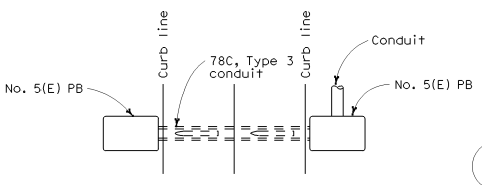

PLAN

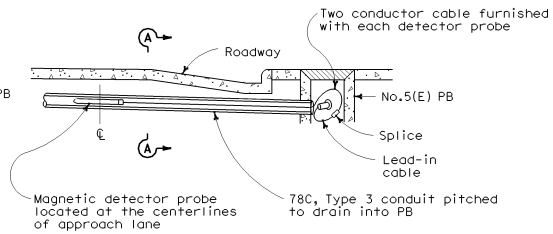

ELEVATION

MAGNETIC VEHICLE DETECTOR
INSTALLATION DETAILS

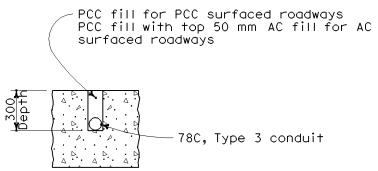

SECTION A-A

Caltrans Metric

DIST	COUNTY	ROUTE	KILOMETER POST TOTAL PROJECT	SHEET NO.	TOTAL SHEETS

REGISTERED ELECTRICAL ENGINEER
July 1, 2004
PLANS APPROVAL DATE

REGISTERED PROFESSIONAL ENGINEER
Martha V. Styer
No. E13738
Exp. 6-30-07
ELECTRICAL
STATE OF CALIFORNIA

The State of California or its officers or agents shall not be responsible for the accuracy or completeness of electronic copies of this plan sheet.

To get to the Caltrans web site, go to: http://www.dot.ca.gov

STATE OF CALIFORNIA
DEPARTMENT OF TRANSPORTATION

ELECTRICAL SYSTEMS (DETECTORS)

NO SCALE

ALL DIMENSIONS ARE IN
MILLIMETERS UNLESS OTHERWISE SHOWN

ES-5C

07-09-04

Back to Table of Contents

DIST	COUNTY	ROUTE	KILOMETER POST TOTAL PROJECT	SHEET NO.	TOTAL SHEETS

Caltrans Metric

REGISTERED ELECTRICAL ENGINEER

July 1, 2004
PLANS APPROVAL DATE

REGISTERED PROFESSIONAL ENGINEER Martha V. Styer No. E13738 Exp. 6-30-07 ELECTRICAL STATE OF CALIFORNIA

The State of California or its officers or agents shall not be responsible for the accuracy or completeness of electronic copies of this plan sheet.

To get to the Caltrans web site, go to: http://www.dot.ca.gov

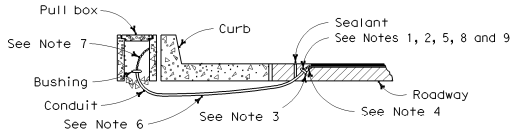

TYPE A
CURB TERMINATION DETAIL

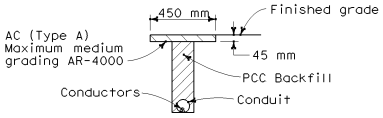

"T" TRENCH DETAIL

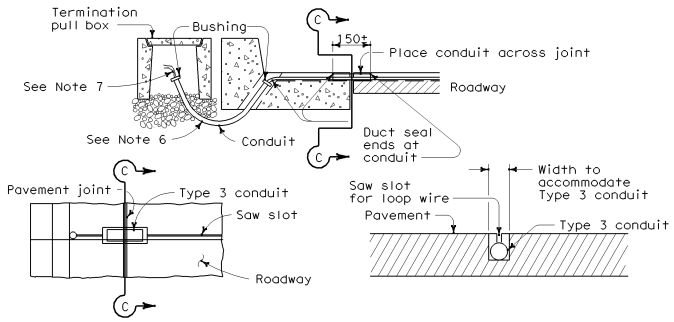

PLAN VIEW

SECTION C-C

TYPE B
CURB TERMINATION DETAILS

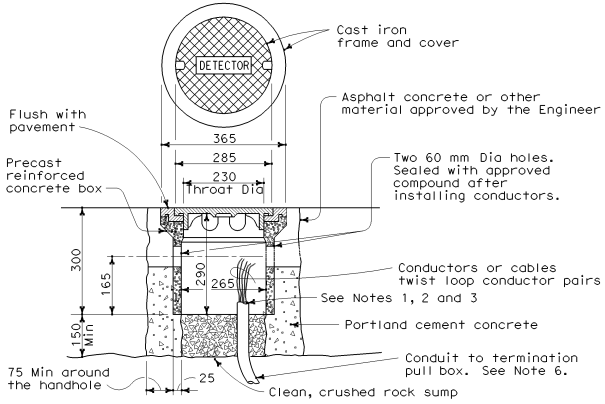

TYPE A DETECTOR HANDHOLE DETAILS

NOTES (This sheet only)

1. Bushing shall be used at end of conduit.
2. Tape detector conductors or cables 75 mm each side of bushings.
3. Install duct seal compound to each end of termination conduit before installing sealant.
4. Round all sharp edges where detector conductors or cables have to pass.
5. End of conduit shall be 80 mm below roadway surface.
6. Conduit size / Loop Conductors
   - 27C Minimum — 1 to 2 pairs
   - 41C Minimum — 3 to 4 pairs
   - 53C Minimum — 5 or more pairs
7. Splice detector conductors or cables to lead-in-cable run to controller cabinet.
8. Location of detector handhole when shown on plans.
9. When the shoulder and traveled way are paved with the same material and there is no joint between them, the conduit shall extend only 600 mm into the shoulder pavement.

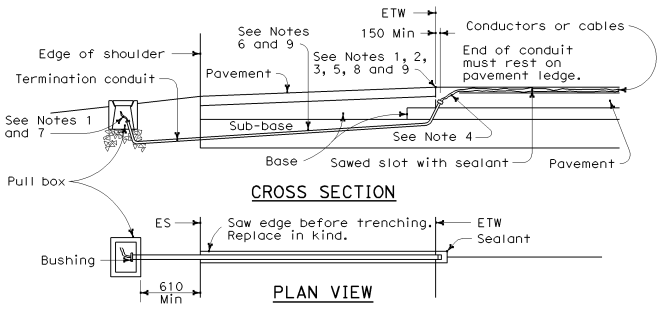

CROSS SECTION

PLAN VIEW

SHOULDER TERMINATION DETAILS

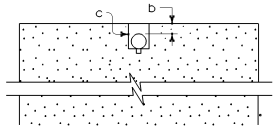

SECTION A-A

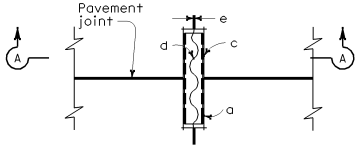

PLAN VIEW

TYPICAL LOOP LEAD-IN DETAILS AT PAVEMENT JOINT

NOTES:

a. 21C, Type 3 conduit 150 mm long minimum, plug both ends with caulking compound to keep out sealant.

b. 13 mm minimum between top of conduit and pavement surface.

c. Saw cut shall not exceed 25 mm in width and 3 mm longer than conduit to be installed.

d. Conductors with 13 mm minimum slack inside conduit.

e. Inductive loop detector saw slot.

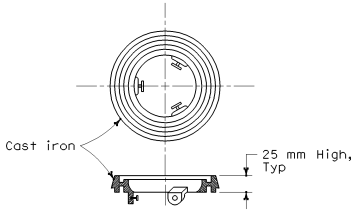

NOTE

Use for Type A detector handhole on pavement resurfacing only.

LOCKING GRADE RING

STATE OF CALIFORNIA
DEPARTMENT OF TRANSPORTATION

ELECTRICAL SYSTEMS (DETECTORS)

NO SCALE

ALL DIMENSIONS ARE IN MILLIMETERS UNLESS OTHERWISE SHOWN

ES-5D

07-15-04

Back to Table of Contents

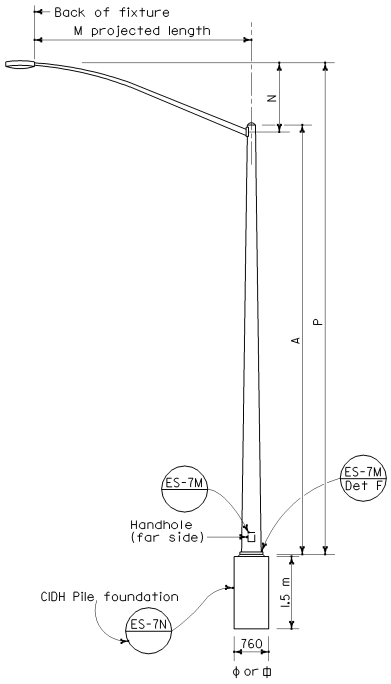

ELEVATION
TYPE 15

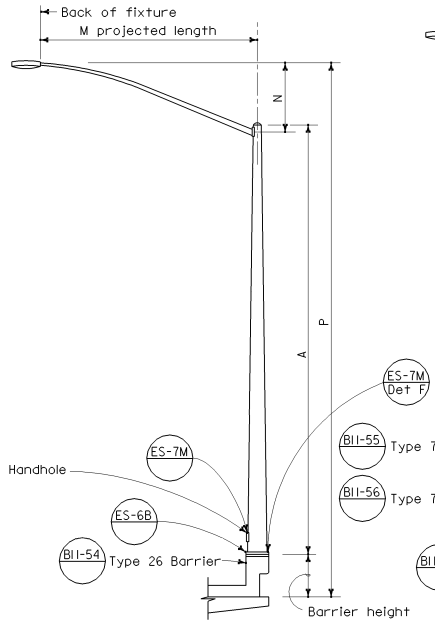

ELEVATION
TYPE 15 BARRIER RAIL MOUNTED
TYPE 21 BARRIER RAIL MOUNTED

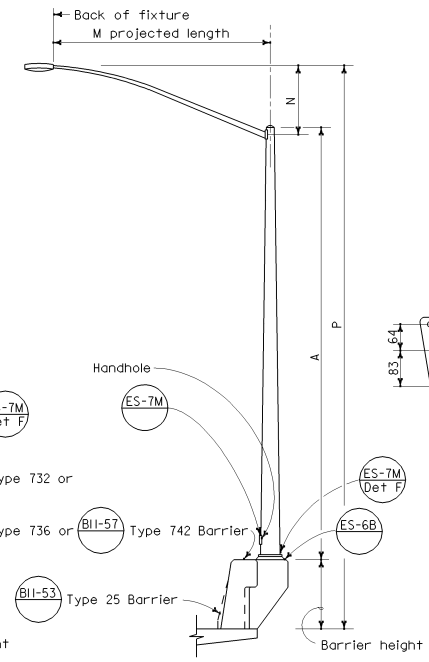

ELEVATION
TYPE 15 BARRIER RAIL MOUNTED
TYPE 21 BARRIER RAIL MOUNTED

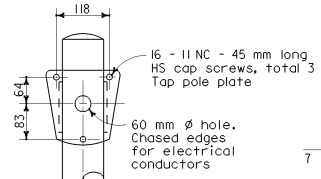

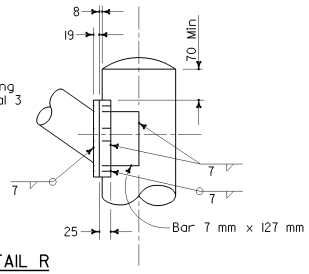

DETAIL R
LUMINAIRE ARM CONNECTION

HIGH STRENGTH CAP SCREWS
16 - 11NC - 45
Length (mm)
Threads (per inch)
Size (mm)

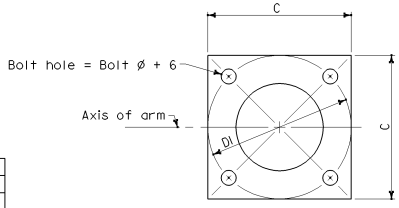

BASE PLATE

POLE TYPE	POLE DATA				BASE PLATE DATA				LUMINAIRE ARM
	A Height	Min OD Base	Min OD Top	Wall Thickness	C	DI Bolt Circle	Thick-ness	Anchor Bolts Size	
	m	mm	mm	mm	mm				m
15	9.1	203	98	3.04	305	305	25	25 ϕ x 915 x 102*	1.8-4.6 [3.7]
21	10.7	219	98	3.04	305	305	25	See ES-6B	1.8-4.6 [3.7]

LUMINAIRE ARM DATA						
M Projected Length	N Rise	Min OD At Pole	Nominal Thickness	P Mounting Height		
				Type 15	Type 15 (810 mm Barrier)	Type 21 (810 mm Barrier)
m	mm	mm	mm	m	m	m
1.8	610±	83	3.04	9.5±	10.3±	11.9±
2.4	760±	89	3.04	9.7±	10.5±	12.1±
3.1	990±	98	3.04	9.9±	10.7±	12.3±
3.7	1290±	98	3.04	10.2±	11.0±	12.6±
4.6	1450±	108	3.04	10.3±	11.1±	12.8±

*For barrier rail bolts, see Standard Plan ES-6B.

NOTES

1. ☐ Indicates arm length to be used unless otherwise noted on the plans.
2. For Type 15-SB, use Type 15 standard with Type 30 base plate details, see Standard Plan ES-6F.
3. For additional notes, see Standard Plan ES-7M and ES-7N.
4. For Type 15-SBI, see Standard Plan ES-6C.

Caltrans Metric

DIST	COUNTY	ROUTE	KILOMETER POST TOTAL PROJECT	SHEET NO.	TOTAL SHEETS

REGISTERED CIVIL ENGINEER
July 1, 2004
PLANS APPROVAL DATE
REGISTERED PROFESSIONAL ENGINEER Tiliat Sattar NO. C42892 Exp. 03-31-06 CIVIL STATE OF CALIFORNIA

The State of California or its officers or agents shall not be responsible for the accuracy or completeness of electronic copies of this plan sheet.

To get to the Caltrans web site, go to: http://www.dot.ca.gov

STATE OF CALIFORNIA
DEPARTMENT OF TRANSPORTATION

ELECTRICAL SYSTEMS (LIGHTING STANDARDS TYPES 15 AND 21)

NO SCALE

ALL DIMENSIONS ARE IN MILLIMETERS UNLESS OTHERWISE SHOWN

ES-6A

07-15-04

Back to Table of Contents

DIST	COUNTY	ROUTE	KILOMETER POST TOTAL PROJECT	SHEET NO.	TOTAL SHEETS

Caltrans Metric

REGISTERED CIVIL ENGINEER

July 1, 2004
PLANS APPROVAL DATE

REGISTERED PROFESSIONAL ENGINEER
Tillat Sattar
No. C42892
Exp. 03-31-06
CIVIL
STATE OF CALIFORNIA

The State of California or its officers or agents shall not be responsible for the accuracy or completeness of electronic copies of this plan sheet.

To get to the Caltrans web site, go to: http://www.dot.ca.gov

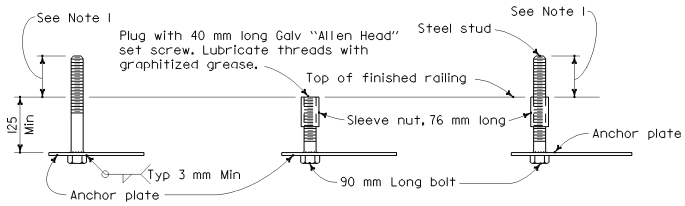

FOR IMMEDIATE INSTALLATION

FOR FUTURE INSTALLATION WITH PLUG

FOR INSTALLATION ON FUTURE ANCHORAGE WITH STUD

DETAIL B
ELECTROLIER ANCHORAGES

NOTES

1. Anchor bolt or stud length shall be such that thread extends 13 mm maximum above nut on level base plate after grouting. See Detail "N".
2. Electrolier anchor bolts shall be held in position for pouring by means of anchor plates and suitable templates. Deviation from the true position, vertical and height, shall not exceed 1.5 mm.
3. See railing sheets for reinforcement and structural details at electroliers and pull boxes.

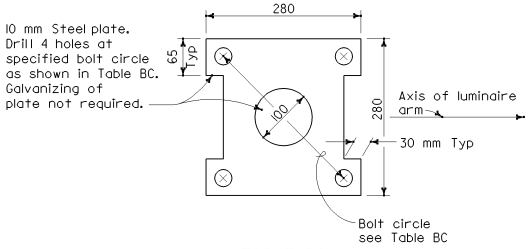

TABLE BC

Type	Bolt Circle	Anchor Bolt Diameter
15	305 mm	25 mm
21	305 mm	32 mm

ANCHOR PLATE

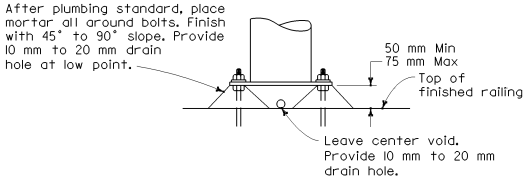

DETAIL N
GROUTING AT ELECTROLIER

STATE OF CALIFORNIA
DEPARTMENT OF TRANSPORTATION

ELECTRICAL SYSTEMS (LIGHTING STANDARDS TYPES 15 AND 21 BARRIER RAIL MOUNTED DETAILS)

NO SCALE

ALL DIMENSIONS ARE IN MILLIMETERS UNLESS OTHERWISE SHOWN

ES-6B

2004 Std PLAN ES-6B

07-09-04

Back to Table of Contents

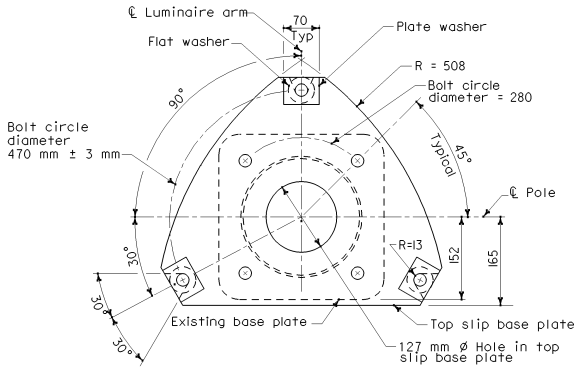

PLAN - TOP PLATE

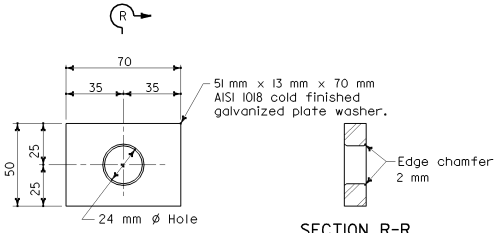

PLATE WASHER

SECTION R-R

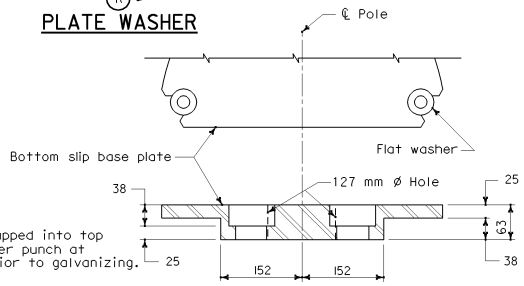

SECTION C-C

CAST OPTION

See Note 5

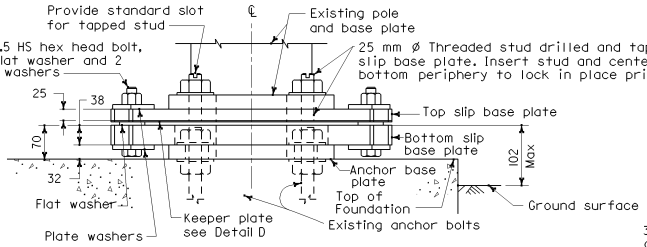

ELEVATION

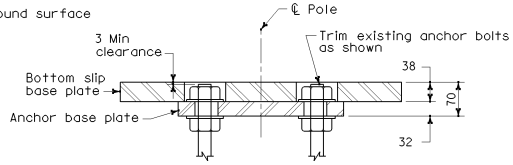

SECTION C-C

WELDED OPTION

See Note 5

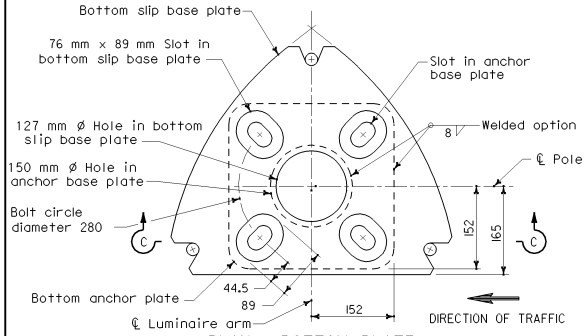

PLAN - BOTTOM PLATE

(For plate dimensions, see "Plan-Top Plate")

SLIP BASE PLATE INSERT DETAILS

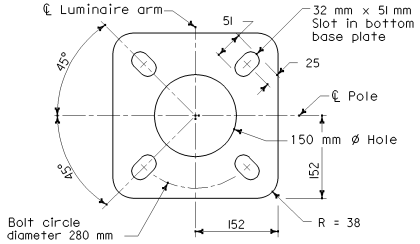

PLAN

ANCHOR BASE PLATE DETAILS

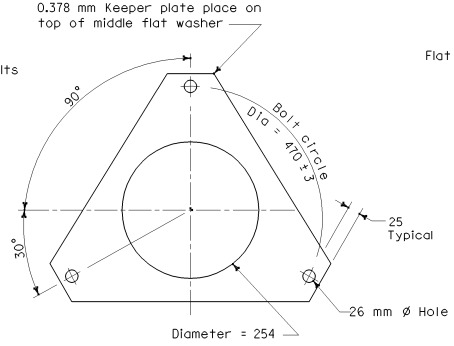

DETAIL D

NOTES

1. Conduit riser (including bushing) shall protrude no more than 50 mm above top of foundation.
2. When existing anchor bolts are 22 mm ø, provide 2 hardened washers of 57 mm ø at each slot hole. Place on each side of anchor base plate.
3. Nuts on 22 mm ø HS clamping bolts shall be lubricated and torqued as per specifications.
4. Torque requirements for nuts attaching anchor base plate to existing anchor bolts are waived. Snug tighten.
5. For details not shown for Cast Option or Welded Option, see "Anchor Base Plate Details" and "Slip Base Plate Insert Details".

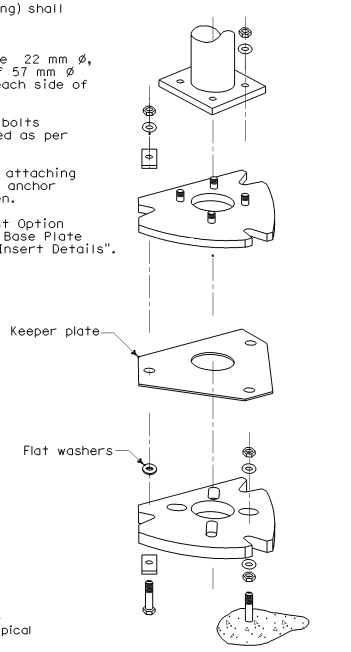

SLIP BASE INSERT DETAIL

Caltrans Metric

DIST	COUNTY	ROUTE	KILOMETER POST TOTAL PROJECT	SHEET NO.	TOTAL SHEETS

REGISTERED CIVIL ENGINEER

July 1, 2004

PLANS APPROVAL DATE

REGISTERED PROFESSIONAL ENGINEER Tiliat Sattar NO. C42892 Exp. 03-31-06 CIVIL STATE OF CALIFORNIA

The State of California or its officers or agents shall not be responsible for the accuracy or completeness of electronic copies of this plan sheet.

To get to the Caltrans web site, go to: http://www.dot.ca.gov

STATE OF CALIFORNIA
DEPARTMENT OF TRANSPORTATION

ELECTRICAL SYSTEMS (LIGHTING STANDARDS TYPE 15 SLIP BASE INSERT)

NO SCALE

ALL DIMENSIONS ARE IN MILLIMETERS UNLESS OTHERWISE SHOWN

ES-6C

07-15-04

Back to Table of Contents

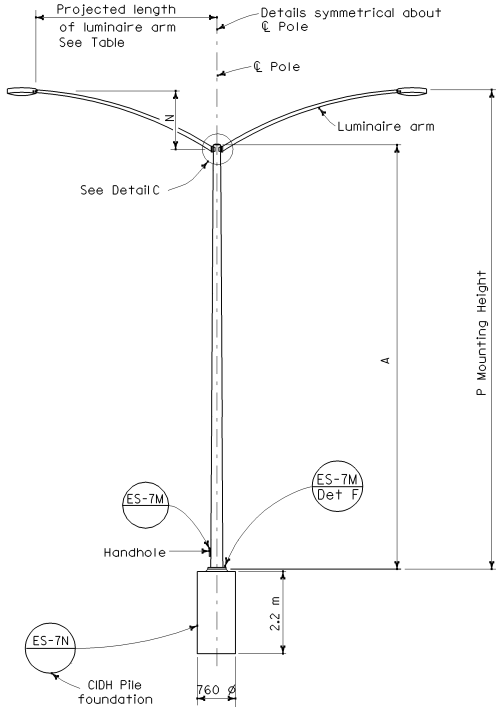

ELEVATION
TYPE 15D

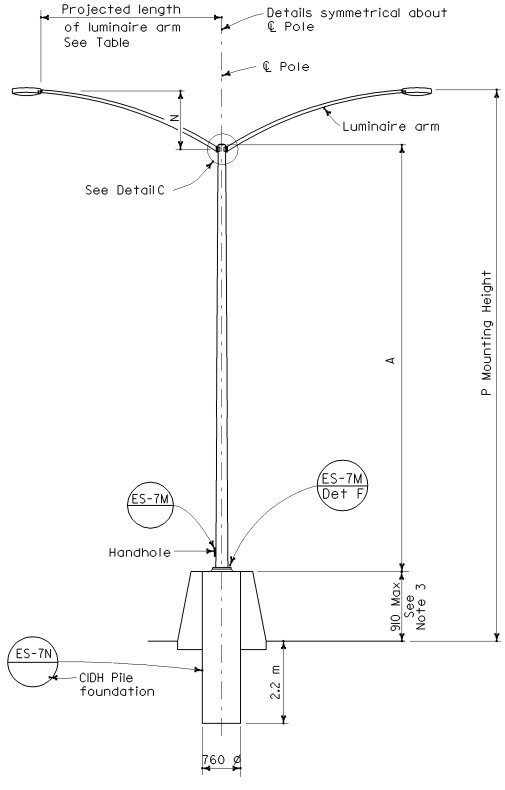

ELEVATION
TYPE 15D MEDIAN BARRIER MOUNTED
TYPE 21D MEDIAN BARRIER MOUNTED

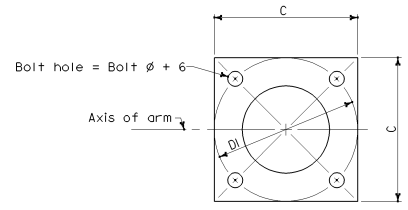

BASE PLATE

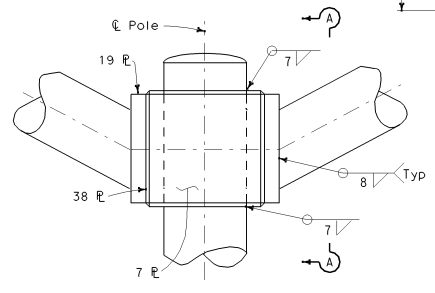

DETAIL C

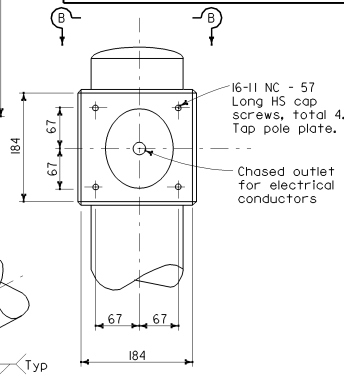

SECTION A-A

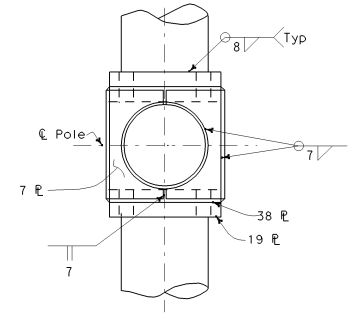

SECTION B-B

POLE TYPE	POLE DATA				BASE PLATE DATA				
	A Height	Min OD		Min Thickness	C	DI Bolt Circle	Thick-ness	Anchor Bolts	
		Base	Top					Size	Bolt Circle
	m	mm	mm	mm	mm	mm	mm	mm	mm
15D	9.1	203	98	4.55	305	305	25	32 ø x 915 x 152	305
21D	10.7	219	98	4.55					

HIGH STRENGTH CAP SCREWS
16 - 11NC - 45
Length (mm)
Threads (per inch)
Size (mm)

LUMINAIRE ARM DATA						
Projected Length	N Rise	Min OD At Pole	Nominal Thickness	P Mounting Height		
				Type 15D	Type 15D (910 mm Barrier)	Type 21D (910 mm Barrier)
m	mm	mm	mm	m	m	m
1.8	610±	83	3.04	9.5±	10.4±	12.0±
2.4	760±	89	3.04	9.7±	10.6±	12.2±
3.1	990±	98	3.04	9.9±	10.8±	12.4±
3.7	1290±	98	3.04	10.2±	11.1±	12.7±

NOTES

1. ☐ indicates arm length to be used unless otherwise noted on the plans.
2. For additional notes see Standard Plan ES-7M.
3. See Concrete Barrier Details Type 60Eand 60SE.

Caltrans Metric

DIST	COUNTY	ROUTE	KILOMETER POST TOTAL PROJECT	SHEET NO.	TOTAL SHEETS

REGISTERED CIVIL ENGINEER
July 1, 2004
PLANS APPROVAL DATE

REGISTERED PROFESSIONAL ENGINEER Tillat Sattar No. C42892 Exp. 03-31-06 CIVIL STATE OF CALIFORNIA

The State of California or its officers or agents shall not be responsible for the accuracy or completeness of electronic copies of this plan sheet.

To get to the Caltrans web site, go to: http://www.dot.ca.gov

STATE OF CALIFORNIA
DEPARTMENT OF TRANSPORTATION

ELECTRICAL SYSTEMS (LIGHTING STANDARDS TYPES 15D AND 21D DOUBLE ARM)

NO SCALE

ALL DIMENSIONS ARE IN MILLIMETERS UNLESS OTHERWISE SHOWN

ES-6D

07-15-04

Back to Table of Contents

LUMINAIRE ARM DATA

	PROJECTED LENGTH	THICKNESS	MINIMUM OD @ POLE	MOUNTING HEIGHT
	m	mm	mm	m
*	1.8	3.04	83	11.2±
	2.4		89	11.4±
	3.1		95	11.6±
	3.7		95	11.9±
	4.6		108	12.0±
**	6.1	4.55	127	11.3±

* Type 30 - arm length 1.8 m - 4.6 m maximum

** Type 31 - arm lengths 6.1 m

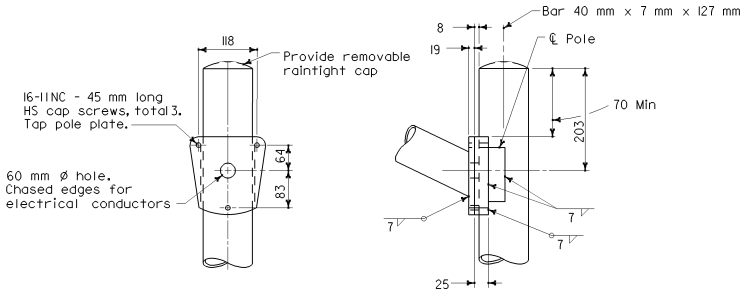

DETAIL A - TYPE 30

HIGH STRENGTH CAP SCREWS

16 - 11NC - 45

Length (mm)

Threads (per inch)

Size (mm)

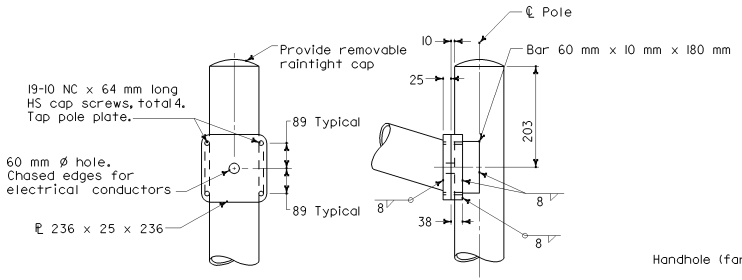

DETAIL A - TYPE 31

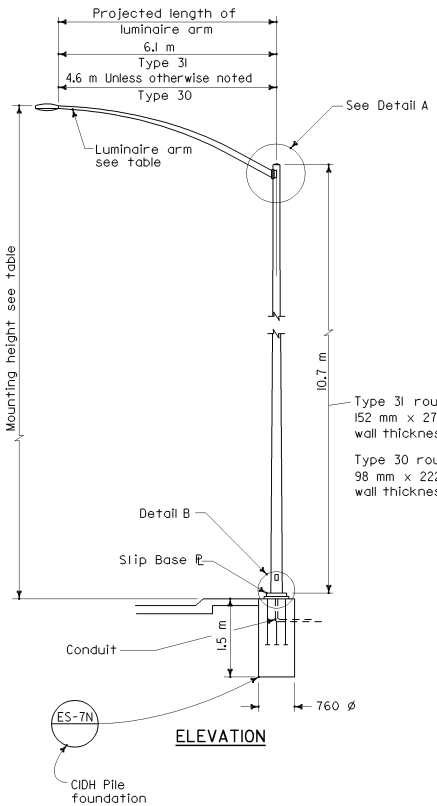

ELEVATION

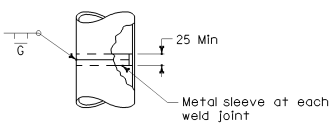

POLE SPLICE

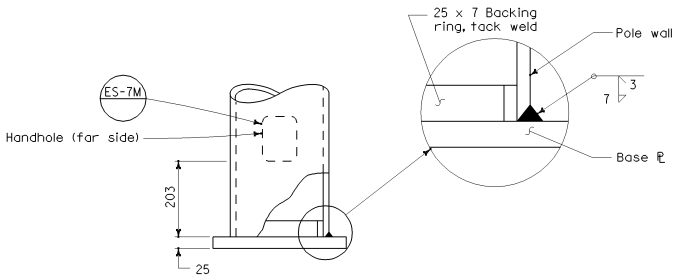

DETAIL B

NOTES

1. Sheet steel shall have a minimum yield of 331 MPa.
2. For slip base details see Standard Plan ES-6F.
3. For Type 30 fixed base use Type 15 base plate, and foundation shown on Standard Plan ES-6A. Use 32 ø x 915 x 104 anchor bolts
4. For Type 31 fixed base use Type 32 base plate, anchor bolts and foundation on Standard Plan ES-6G.
5. Handhole shall be located on downstream side of traffic unless noted otherwise on plans.
6. For additional general notes refer to Standard Plan ES-7M.

Caltrans Metric

DIST	COUNTY	ROUTE	KILOMETER POST TOTAL PROJECT	SHEET NO.	TOTAL SHEETS

REGISTERED CIVIL ENGINEER

July 1, 2004

PLANS APPROVAL DATE

REGISTERED PROFESSIONAL ENGINEER Tiliat Sattar NO. C42892 Exp. 03-31-06 CIVIL STATE OF CALIFORNIA

The State of California or its officers or agents shall not be responsible for the accuracy or completeness of electronic copies of this plan sheet.

To get to the Caltrans web site, go to: http://www.dot.ca.gov

STATE OF CALIFORNIA
DEPARTMENT OF TRANSPORTATION

ELECTRICAL SYSTEMS (LIGHTING STANDARDS TYPES 30 AND 31

NO SCALE

ALL DIMENSIONS ARE IN MILLIMETERS UNLESS OTHERWISE SHOWN

ES-6E

2004 Std PLAN ES-6E

07-15-04

Back to Table of Contents

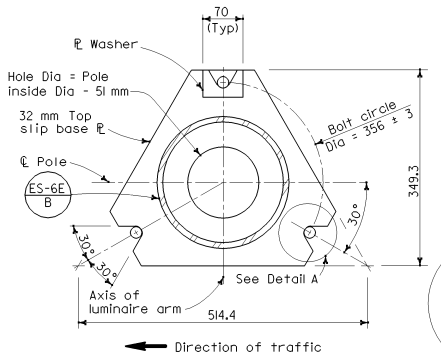

BASE PLATE

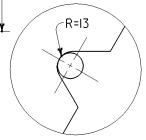

DETAIL A

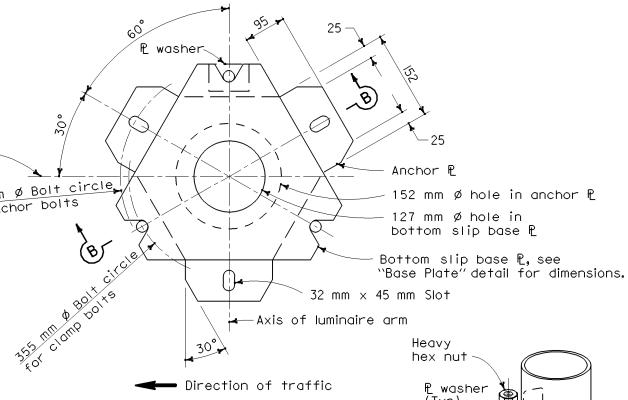

BOTTOM PLATES

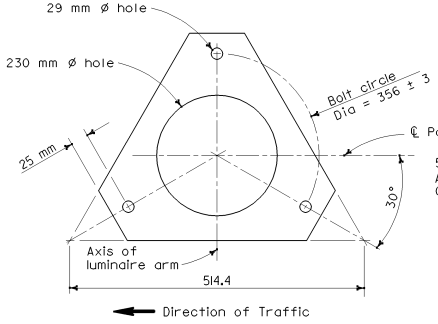

KEEPER PLATE

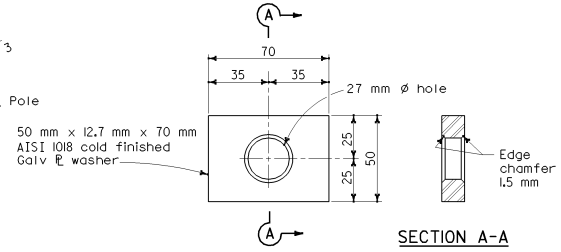

PLATE WASHER

SECTION A-A

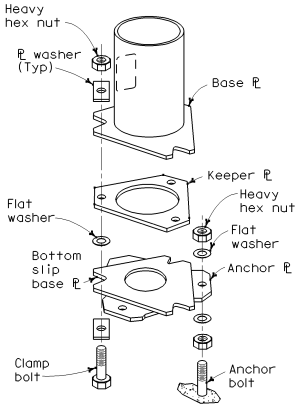

SLIP BASE DETAIL

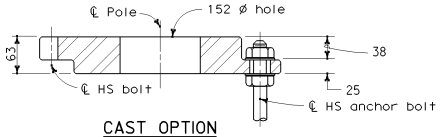

CAST OPTION

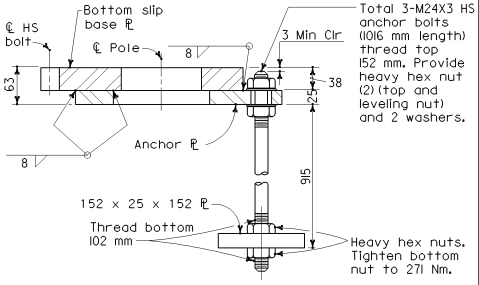

WELDED OPTION

SECTION B-B

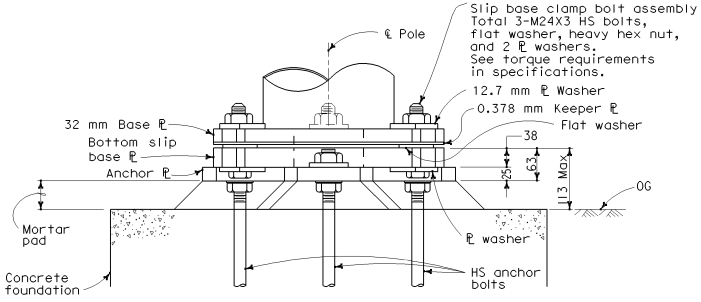

ELEVATION - SLIP BASE

Caltrans Metric

DIST	COUNTY	ROUTE	KILOMETER POST TOTAL PROJECT	SHEET NO.	TOTAL SHEETS

REGISTERED CIVIL ENGINEER

July 1, 2004
PLANS APPROVAL DATE

REGISTERED PROFESSIONAL ENGINEER Tillat Sattar No. C42892 Exp. 03-31-06 CIVIL STATE OF CALIFORNIA

The State of California or its officers or agents shall not be responsible for the accuracy or completeness of electronic copies of this plan sheet.

To get to the Caltrans web site, go to: http://www.dot.ca.gov

NOTES

1. M24 x 3 HS anchor bolts, snug tighten. For clamp bolts, see specifications.
2. Conduit shall not protrude more than 50 mm above top of foundation.
3. Locate handhole on downstream side of traffic.
4. For Type 30 fixed base and for Type 31 fixed base, see Notes 3 and 4 on Standard Plan ES-6E.

STATE OF CALIFORNIA
DEPARTMENT OF TRANSPORTATION

ELECTRICAL SYSTEMS (LIGHTING STANDARDS TYPES 30 AND 31 BASE PLATE DETAILS)

NO SCALE

ALL DIMENSIONS ARE IN MILLIMETERS UNLESS OTHERWISE SHOWN

ES-6F

07-28-04

Back to Table of Contents

DIST	COUNTY	ROUTE	KILOMETER POST TOTAL PROJECT	SHEET NO.	TOTAL SHEETS

REGISTERED ~~CIVIL~~ ENGINEER

July 1, 2004
PLANS APPROVAL DATE

REGISTERED PROFESSIONAL ENGINEER
Tiliat Sattar
NO. C42892
Exp. 03-31-06
CIVIL
STATE OF CALIFORNIA

The State of California or its officers or agents shall not be responsible for the accuracy or completeness of electronic copies of this plan sheet.

To get to the Caltrans web site, go to: http://www.dot.ca.gov

Caltrans Metric

NOTE

1. Handhole shall be located on downstream side of traffic unless otherwise noted on the plans.

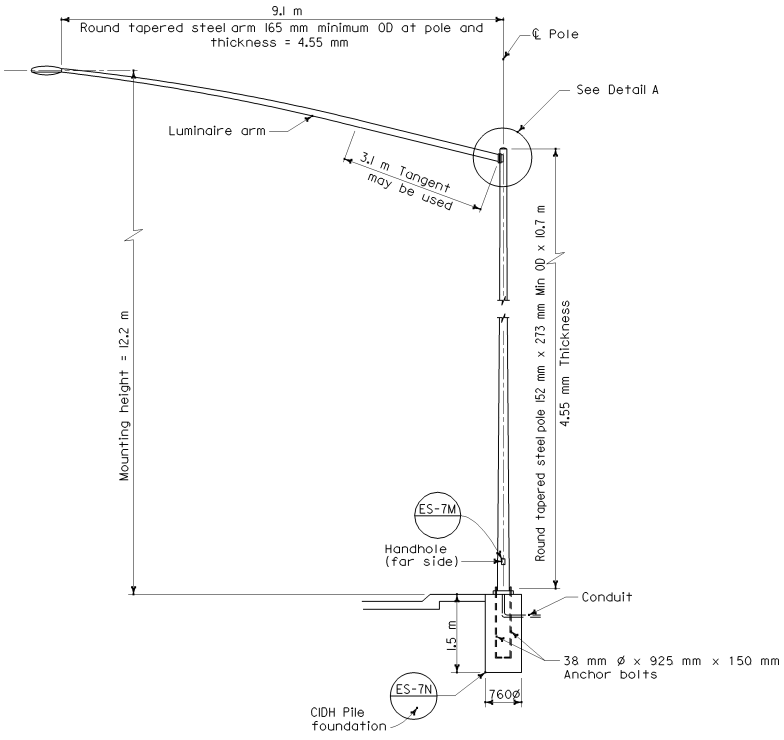

ELEVATION

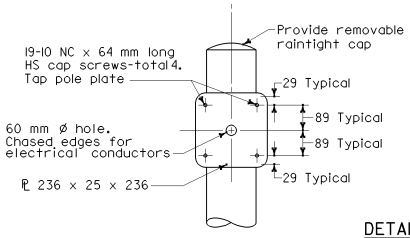

DETAIL A

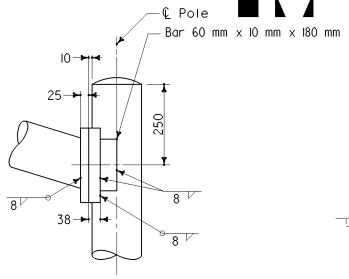

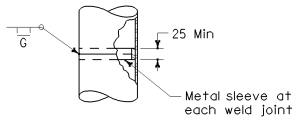

POLE SPLICE

HIGH STRENGTH CAP SCREWS

16 - 11NC - 45
- Length (mm)
- Threads (per inch)
- Size (mm)

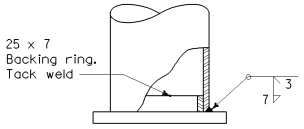

This detail shall be used for 2 ply poles.

ELEVATION

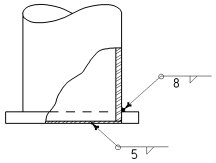

ELEVATION

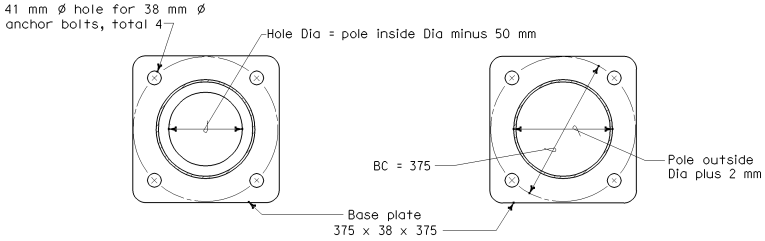

PLAN PLAN

ALTERNATIVE BASE PLATE DETAILS

STATE OF CALIFORNIA
DEPARTMENT OF TRANSPORTATION

ELECTRICAL SYSTEMS (LIGHTING STANDARDS TYPE 32)

NO SCALE

ALL DIMENSIONS ARE IN MILLIMETERS UNLESS OTHERWISE SHOWN

ES-6G

07-28-04

Back to Table of Contents

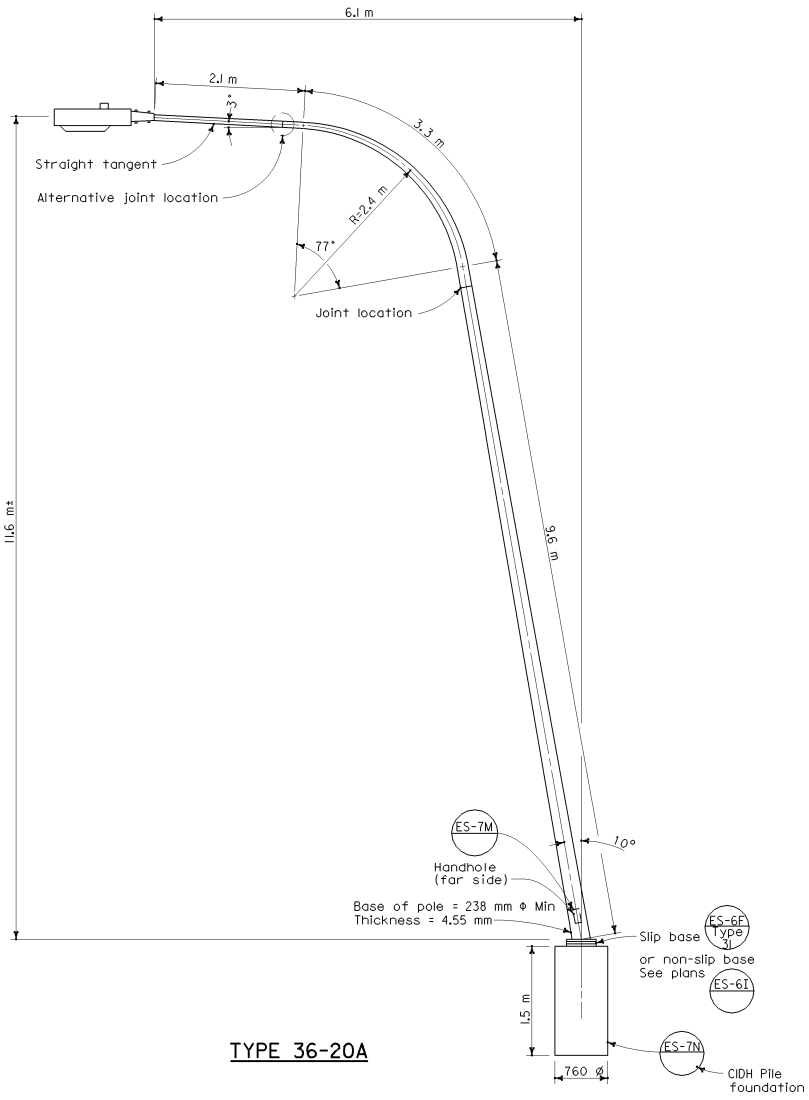

TYPE 36-20A

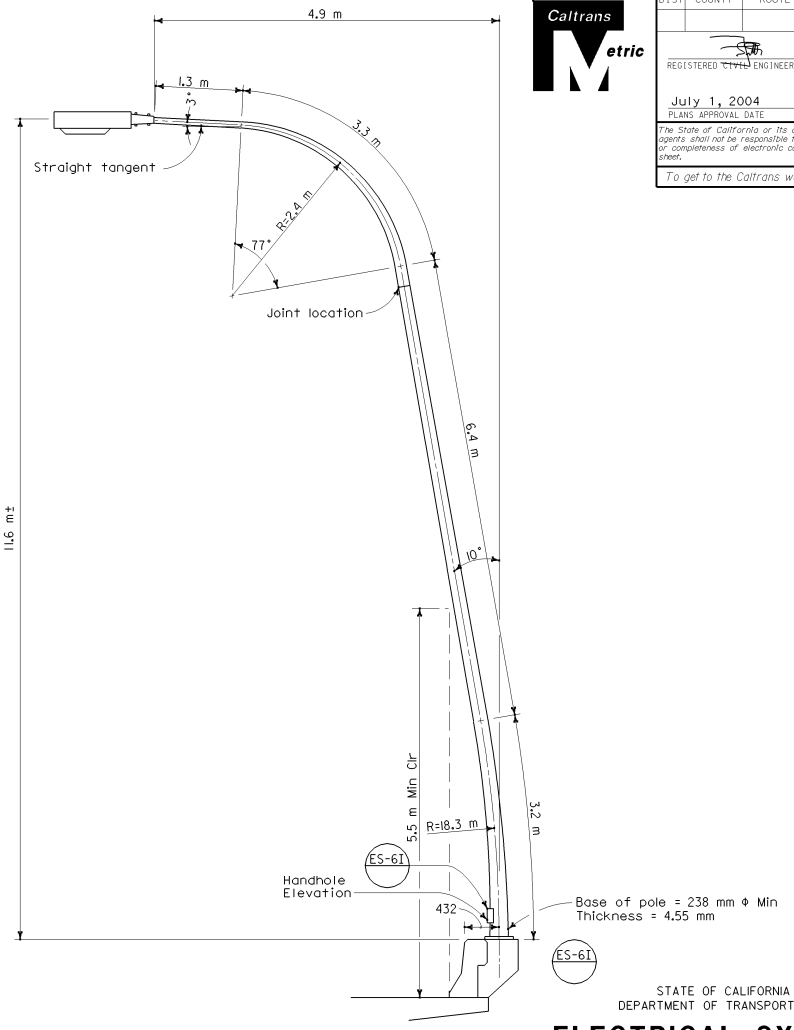

TYPE 35

Caltrans Metric

DIST	COUNTY	ROUTE	KILOMETER POST TOTAL PROJECT	SHEET NO.	TOTAL SHEETS

REGISTERED CIVIL ENGINEER

July 1, 2004
PLANS APPROVAL DATE

REGISTERED PROFESSIONAL ENGINEER
Tillat Sattar
No. C42892
Exp. 03-31-06
CIVIL
STATE OF CALIFORNIA

The State of California or its officers or agents shall not be responsible for the accuracy or completeness of electronic copies of this plan sheet.

To get to the Caltrans web site, go to: http://www.dot.ca.gov

STATE OF CALIFORNIA
DEPARTMENT OF TRANSPORTATION

ELECTRICAL SYSTEMS (LIGHTING STANDARDS TYPES 35 AND 36-20A, 10 DEGREE TYPE)

NO SCALE

ALL DIMENSIONS ARE IN MILLIMETERS UNLESS OTHERWISE SHOWN

ES-6H

07-28-04

Back to Table of Contents

DIST	COUNTY	ROUTE	KILOMETER POST TOTAL PROJECT	SHEET NO.	TOTAL SHEETS

Caltrans Metric

REGISTERED CIVIL ENGINEER

July 1, 2004
PLANS APPROVAL DATE

REGISTERED PROFESSIONAL ENGINEER
Tiliat Sattar
NO. C42892
Exp. 03-31-06
CIVIL
STATE OF CALIFORNIA

The State of California or its officers or agents shall not be responsible for the accuracy or completeness of electronic copies of this plan sheet.

To get to the Caltrans web site, go to: http://www.dot.ca.gov

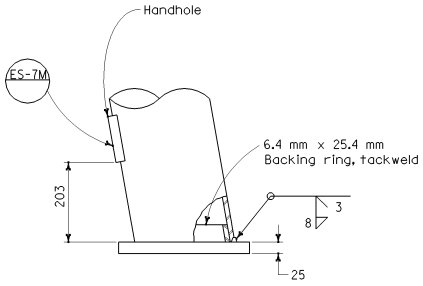

ELEVATION

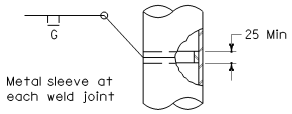

POLE SPLICE

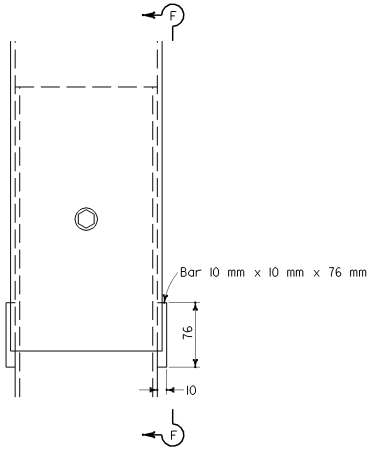

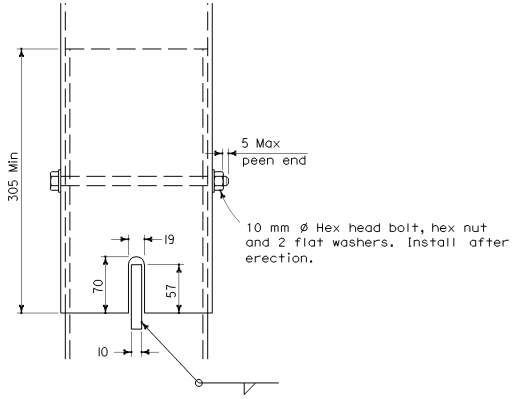

SECTION F-F

SLIP JOINT DETAILS

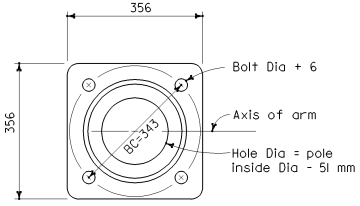

PLAN

BASE PLATE DETAILS

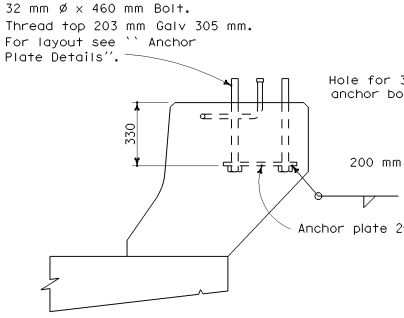

TYPE 35 ANCHOR DETAILS

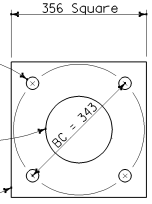

ANCHOR PLATE DETAILS

NOTES

1. Pole and arm configurations shown are the final form when erected in place. Provide camber as necessary.
2. Poles and arms shall be round, tapered steel tubes with a taper of 11.45 mm/m to 11.67 mm/m.
3. Alternative slip joint or sleeve joint designs may be submitted with calculations to the Engineer for approval.
4. Knee radius 2.4 m Min - 3.1 m Max.
5. Tube bends shall be made in a manner to prevent buckling or crimping.
6. A 2 NPS pipe tenon, 203 mm maximum long may be used for the luminaire connection.

STATE OF CALIFORNIA
DEPARTMENT OF TRANSPORTATION

ELECTRICAL SYSTEMS (LIGHTING STANDARDS TYPES 35 AND 36-20A, 10 DEGREE TYPE DETAILS)

NO SCALE

ALL DIMENSIONS ARE IN MILLIMETERS UNLESS OTHERWISE SHOWN

ES-6I

2004 Std PLAN ES-6I

07-15-04

Back to Table of Contents

Post Type	Pole Data			Base Plate Data (mm)					CIDH Pile Data		
	Height "H" (m)	Min OD Base (mm)	Min Thickness Base (mm)	Dia	Thickness	Anchor Bolts			"D" (mm)	"L" (m)	Pile Reinf
						Total	Size "d"	BC			
HM 80	24.4	457	4.8	775	51	4	51	635	1070	3.0	10-#25
HM 100	30.5	495	4.8	775	51	6	51	635	1070	3.3	13-#25
HM 120	36.6	565	6.4	953	51	6	51	812	1220	3.6	20-#25
HM 160	48.8	673	6.4	1092	64	6	64	914	1370	4.5	25-#25

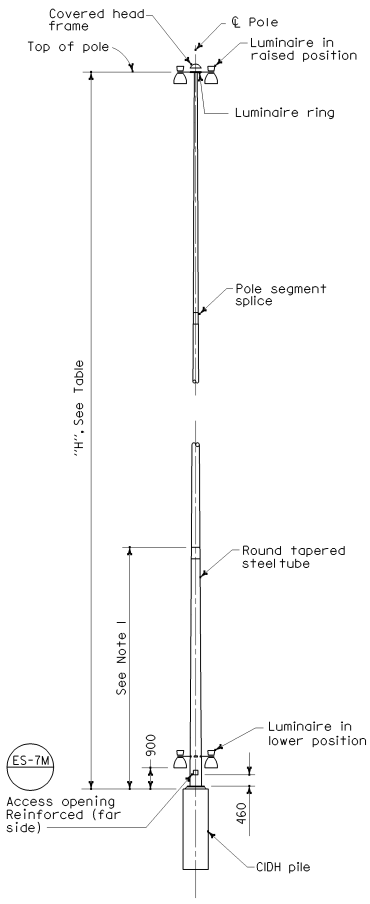

POLE DETAILS

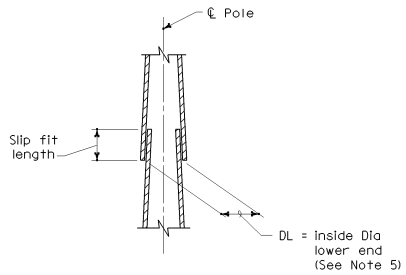

POLE SEGMENT SPLICE DETAIL

See Note 5

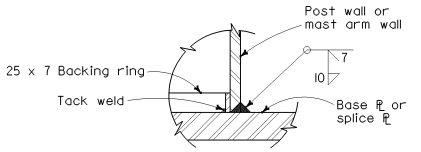

WELD DETAIL

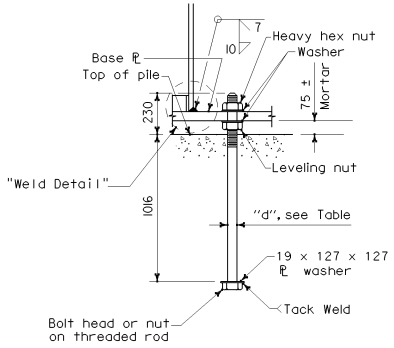

ANCHOR BOLT DETAIL

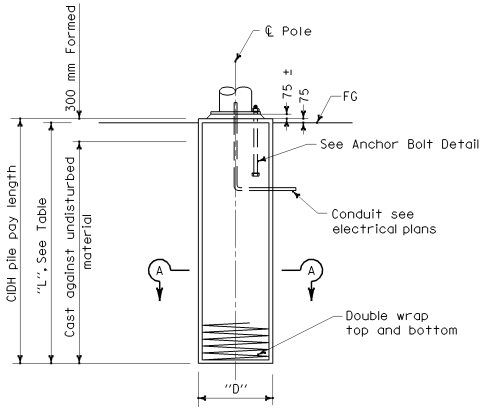

TYPICAL ELEVATION

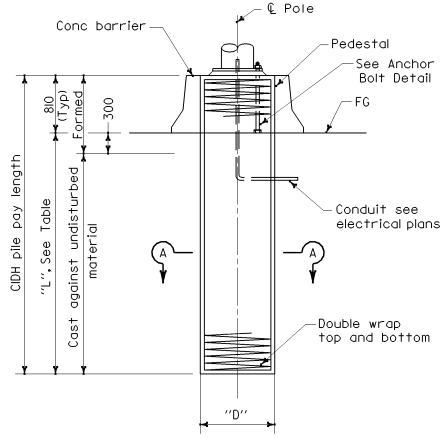

MEDIAN LOCATION

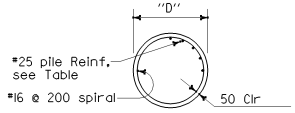

SECTION A-A

CIDH PILE DETAILS

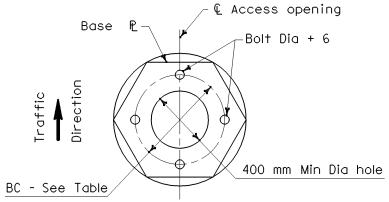

4 BOLTS

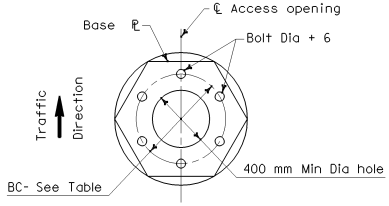

6 BOLTS

BASE PLATE DETAILS

See Note 6

NOTES

1. Pole details shall suit the lowering device and this foundation plan. Pole details shall be submitted to the Engineer for approval.
2. Pole finish shall be galvanized.
3. For number of luminaires to be mounted on the pole, see Electrical Plans.
4. Foundation design is based on a maximum of 10 luminaires. Design wind velocity 129 km/h.
5. Slip fit length shall not be less than 1.5 DL.
6. Base plate shape optional.

Caltrans Metric

DIST	COUNTY	ROUTE	KILOMETER POST TOTAL PROJECT	SHEET NO.	TOTAL SHEETS

REGISTERED CIVIL ENGINEER

July 1, 2004
PLANS APPROVAL DATE

REGISTERED PROFESSIONAL ENGINEER Tillat Sattar No. C42892 Exp. 03-31-06 CIVIL STATE OF CALIFORNIA

The State of California or its officers or agents shall not be responsible for the accuracy or completeness of electronic copies of this plan sheet.

To get to the Caltrans web site, go to: http://www.dot.ca.gov

STATE OF CALIFORNIA
DEPARTMENT OF TRANSPORTATION

ELECTRICAL SYSTEMS (LIGHTING STANDARDS 24.4 m TO 48.8 m HIGH MAST LIGHT POLE FOUNDATION DETAILS)

NO SCALE

ALL DIMENSIONS ARE IN MILLIMETERS UNLESS OTHERWISE SHOWN

ES-6J

2004 Std PLAN ES-6J

07-28-04

Back to Table of Contents

LUMINAIRE ARM DATA			
M Projected Length	N Rise	Min OD At Pole	Nominal Thickness
m	mm	mm	mm
4.6	1450±	108	3.04
6.1	750±	127	4.55

Pole Extension Type	Pole Data			
	Height "H" (m)	Min OD (mm)		Thickness (mm)
		BASE	TOP	
Type 5	1.5	165	152	4.55
Type 10	3.0	184	152	4.55

Caltrans Metric

DIST	COUNTY	ROUTE	KILOMETER POST TOTAL PROJECT	SHEET NO.	TOTAL SHEETS

REGISTERED CIVIL ENGINEER

July 1, 2004
PLANS APPROVAL DATE

REGISTERED PROFESSIONAL ENGINEER Tiliat Sattar NO. C42892 Exp. 03-31-06 CIVIL STATE OF CALIFORNIA

The State of California or its officers or agents shall not be responsible for the accuracy or completeness of electronic copies of this plan sheet.

To get to the Caltrans web site, go to: http://www.dot.ca.gov

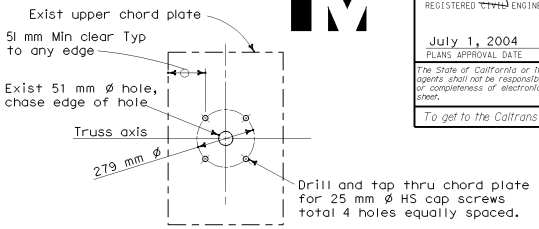

UPPER CHORD PLATE (S13)

HIGH STRENGTH CAP SCREWS

16 - 11NC - 45
- Length (mm)
- Threads (per inch)
- Size (mm)

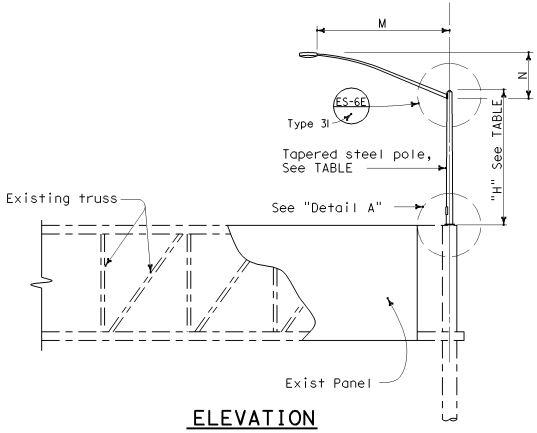

ELEVATION

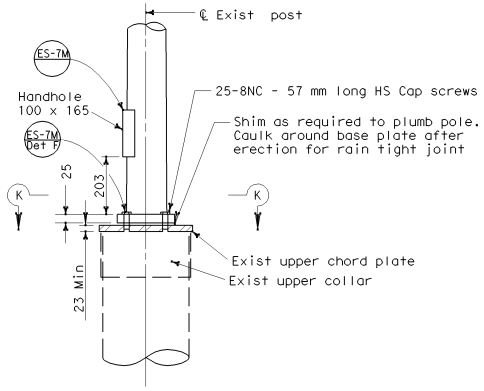

DETAIL A

GENERAL NOTES:

SPECIFICATIONS

Design : AASHTO specifications for structural supports for highway signs, luminaires and traffic signals, dated 2001

LOADING

Wind Loadings : 129 km/h AASHTO

UNIT STRESSES

Structural Steel : fy = 331 MPa tapered steel tube (Pole)
fy = 248 MPa unless noted otherwise noted

NOTES:

1. The Contractor shall verify all controlling field dimensions before ordering or fabricating any material.
2. All steel shall be galvanized after fabrication.
3. Bolt hole locations may vary at the discretion of the Engineer.

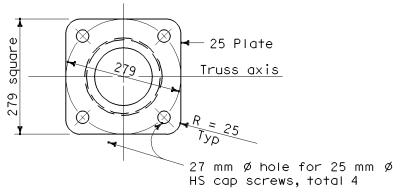

SECTION K-K

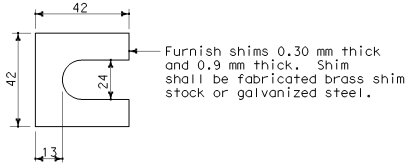

SHIM DETAIL

STATE OF CALIFORNIA
DEPARTMENT OF TRANSPORTATION

ELECTRICAL SYSTEMS (LIGHTING STANDARDS TYPE 5 AND TYPE 10 OVERHEAD SIGN MOUNTED)

NO SCALE

ALL DIMENSIONS ARE IN MILLIMETERS UNLESS OTHERWISE SHOWN

ES-6K

2004 Std PLAN ES-6K

07-15-04

Back to Table of Contents

DIST	COUNTY	ROUTE	KILOMETER POST TOTAL PROJECT	SHEET NO.	TOTAL SHEETS

REGISTERED CIVIL ENGINEER

July 1, 2004
PLANS APPROVAL DATE

REGISTERED PROFESSIONAL ENGINEER
Tillat Sattar
No. C42892
Exp. 03-31-06
CIVIL
STATE OF CALIFORNIA

The State of California or its officers or agents shall not be responsible for the accuracy or completeness of electronic copies of this plan sheet.

To get to the Caltrans web site, go to: http://www.dot.ca.gov

Caltrans Metric

NOTES

1. Pipe dimensions for pedestrian push button post are nominal. See ASTM A6M.
2. For additional details and data for Type 15TS Standard, see Standard Plan ES-6A.

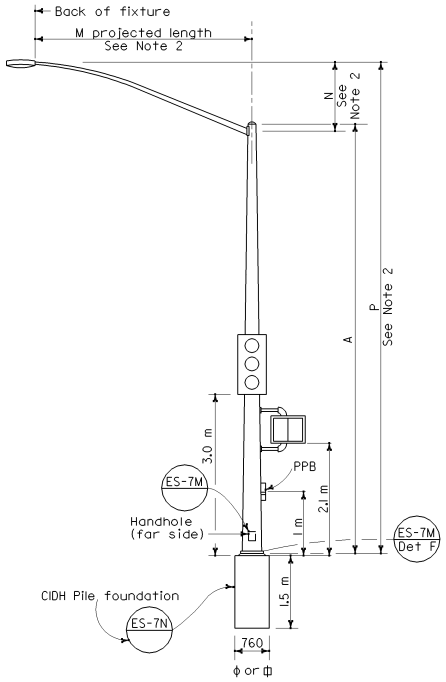

ELEVATION
TYPE 15TS STANDARD
See Note 2

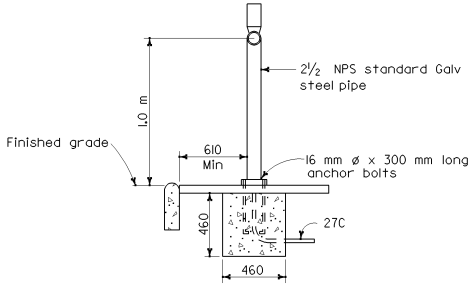

ELEVATION

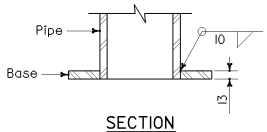

SECTION

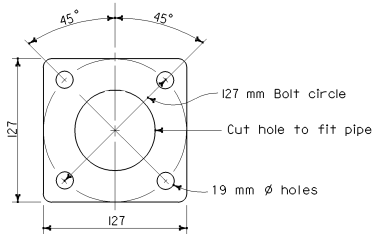

BASE PLATE
PPB POST

PEDESTRIAN PUSH BUTTON POST

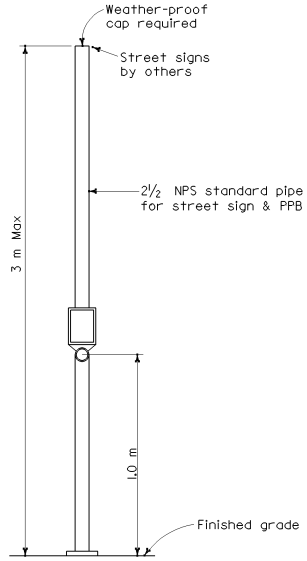

Foundation and anchor bolt details same as PPB post

COMBINED STREET SIGN PEDESTRIAN PUSH BUTTON POST

TYPE 15TS STANDARD (See Note 3)

POLE DATA				BASE PLATE DATA			
A Height	Min OD Base	Min OD Top	Wall Thickness	C	DI Bolt Circle	Thick-ness	Anchor Bolts Size
m	mm	mm	mm	mm			
9.1	203	98	4.55	305	305	25	32 ø x 915 x 152

STATE OF CALIFORNIA
DEPARTMENT OF TRANSPORTATION

ELECTRICAL SYSTEMS (SIGNAL STANDARDS PUSH BUTTON POSTS AND TYPE 15TS STANDARD)

NO SCALE

ALL DIMENSIONS ARE IN MILLIMETERS UNLESS OTHERWISE SHOWN

ES-7A

2004 Std PLAN ES-7A

07-15-04

Back to Table of Contents

DIST	COUNTY	ROUTE	KILOMETER POST TOTAL PROJECT	SHEET NO.	TOTAL SHEETS

REGISTERED CIVIL ENGINEER

July 1, 2004
PLANS APPROVAL DATE

REGISTERED PROFESSIONAL ENGINEER Tiliat Sattar No. C42892 Exp. 03-31-06 CIVIL STATE OF CALIFORNIA

The State of California or its officers or agents shall not be responsible for the accuracy or completeness of electronic copies of this plan sheet.

To get to the Caltrans web site, go to: http://www.dot.ca.gov

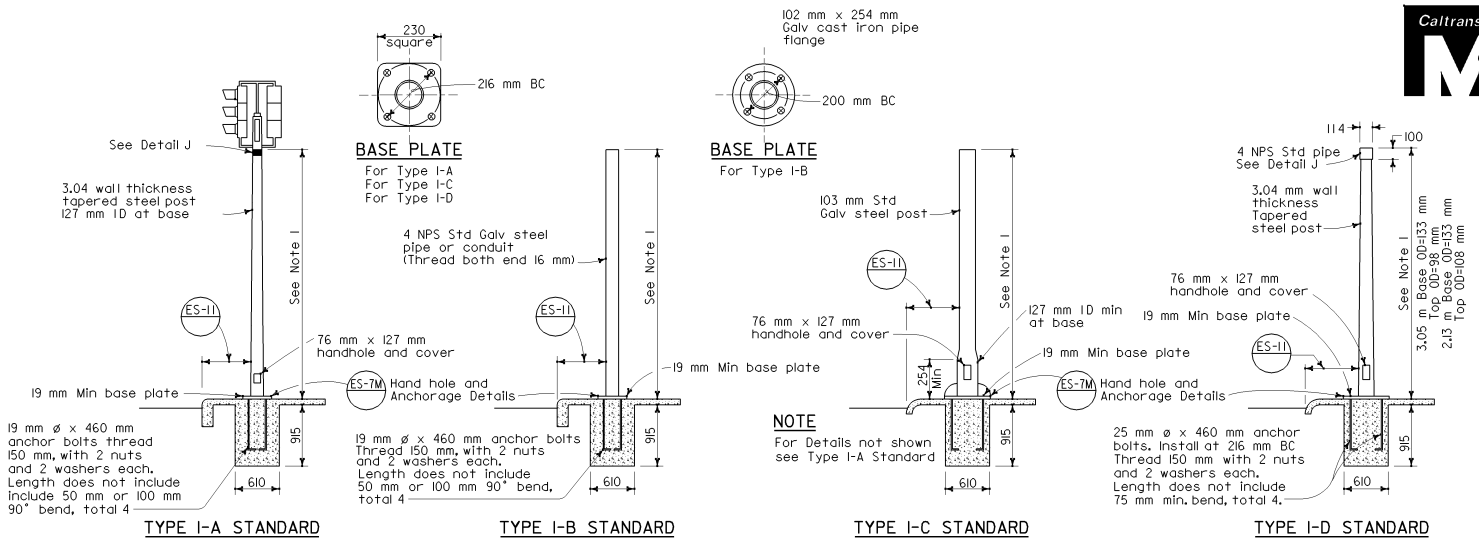

TYPE 1 SIGNAL STANDARDS

NOTES

1. Standards shall be 3.05 m± 50 mm for vehicle signals and 2.13 m± 50 mm for pedestrian signals unless otherwise noted on plans.
2. Top of standards shall be 114 mm OD.
3. Conduits shall extend 50 mm maximum above finished surface of foundation and for Types 1-A, 1-C and 1-D shall be sloped toward handhole.
4. Anchor bolts shall be bonded to conduit or grounding conductor.
5. Conduit between standard and adjacent pull box shall be Size 53 minimum.
6. Paint numbers on roadway side facing traffic when electrolier or post is left of direction of traffic.

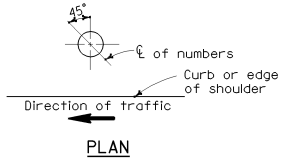

PLAN

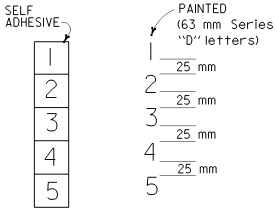

NUMBER DETAIL

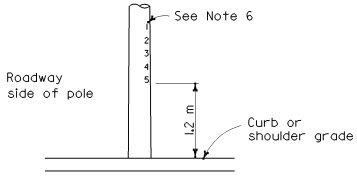

TYPICAL NUMBER FORMAT

LOCATION OF EQUIPMENT NUMBERS ON STANDARDS AND POSTS

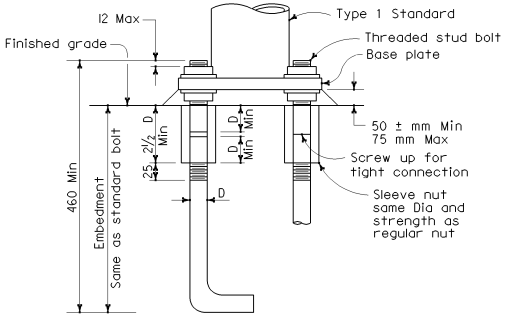

ANCHOR BOLTS WITH SLEEVE NUTS

Sleeve nuts to be used only when shown or specified on Project Plans

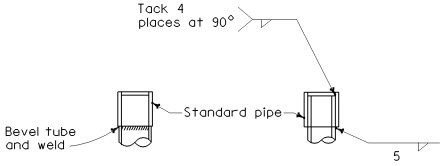

DETAIL J

Tube may be inserted into pipe or butted as required

STATE OF CALIFORNIA
DEPARTMENT OF TRANSPORTATION

ELECTRICAL SYSTEM (SIGNAL AND LIGHTING STANDARDS TYPE 1 STANDARDS AND EQUIPMENT NUMBERING)

NO SCALE

ALL DIMENSIONS ARE IN MILLIMETERS UNLESS OTHERWISE SHOWN

ES-7B

07-28-04

Back to Table of Contents

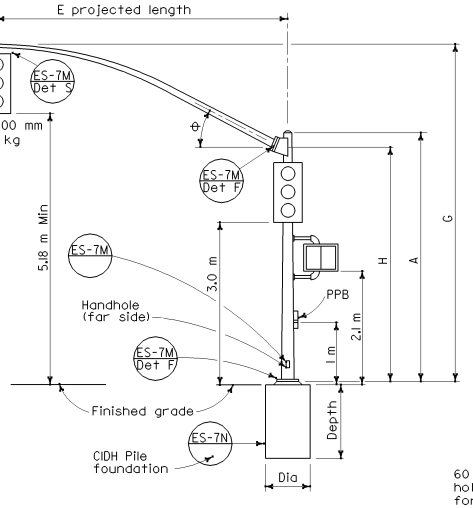

ELEVATION

TYPE 18-1-129

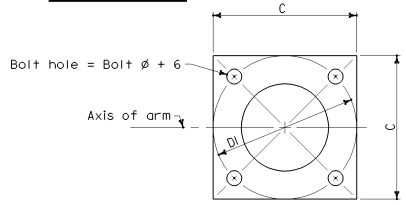

BASE PLATE

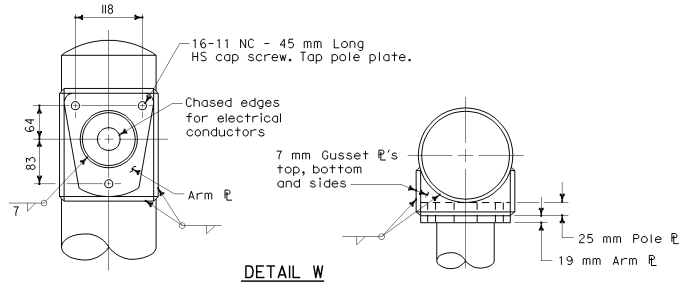

DETAIL W

LUMINAIRE ARM CONNECTION

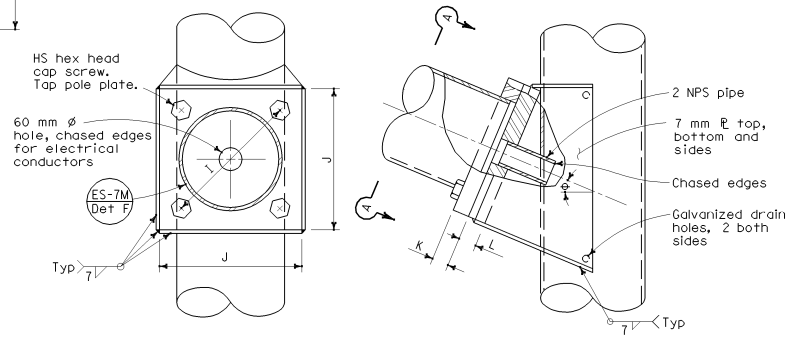

SECTION A-A

ELEVATION

SIGNAL ARM CONNECTION DETAILS

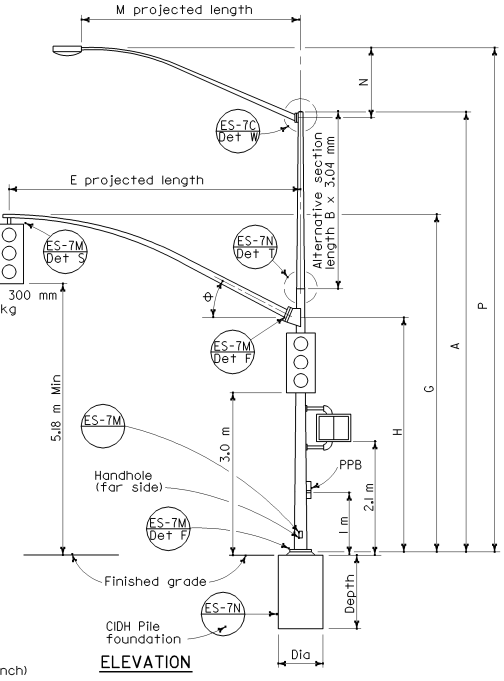

ELEVATION

TYPE 19-1-129, 19A-1-129

HIGH STRENGTH CAP SCREWS

16 - 11NC - 45

Length (mm)

Threads (per inch)

Size (mm)

SIGNAL ARM DATA										
E Projected Length	G Mounting Height	H	Min OD At Pole	Thickness	I Bolt Circle	HS Cap Screws	J Plate Size	K Arm ℄ Thickness	L Pole ℄ Thickness	Φ
m			mm							
4.6	6.8 ±	4.9	178	3.04	305	32-7NC-76	305	32	38	23°
6.1	6.6 ±		181							
7.6	6.9 ±		186							
9.1	7.0 ±		203							

LUMINAIRE ARM DATA					
M Projected Length	N Rise	Min OD at Pole	Thickness	P Mounting Height 9.1 Pole	P Mounting Height 10.7 Pole
m	mm			m	
1.8	610 ±	83	3.04	9.5 ±	11.1 ±
2.4	760 ±	89		9.7 ±	11.3 ±
3.1	990 ±	98		9.9 ±	11.5 ±
3.7	1290 ±			10.2 ±	11.8 ±
4.6	1450 ±	108		10.4 ±	12.0 ±

Pole Type	Load Case	Wind Velocity km/h	POLE DATA: A Height	Min OD Base	Min OD Top	Thickness	Alternative Section B Length	Alternative Section Bottom	Alternative Section Top	BASE PLATE DATA: C	DI Bolt Circle	Thickness	Anchor Bolts Size	Luminaire Arm	Signal Arm	CIDH PILE FOUNDATION: Diameter	Depth	Reinforced
			m	mm			m	mm		mm				m		mm	m	
18-1-129	1	129	5.2	273	214	4.55	None	203		457	445	32	38 ø x 925 x 152	None	4.6 to 9.1	760	2.2	Yes
19-1-129			9.1		168		3.0		168					1.8-4.6 [3.7]				
19A-1-129			10.7		151		4.6		151					1.8-4.6 [4.6]				

☐ Indicates arm length to be used unless otherwise noted on plans.

Caltrans Metric

DIST	COUNTY	ROUTE	KILOMETER POST TOTAL PROJECT	SHEET NO.	TOTAL SHEETS

REGISTERED CIVIL ENGINEER

July 1, 2004

PLANS APPROVAL DATE

REGISTERED PROFESSIONAL ENGINEER Tillat Sattar No. C42892 Exp. 03-31-06 CIVIL STATE OF CALIFORNIA

The State of California or its officers or agents shall not be responsible for the accuracy or completeness of electronic copies of this plan sheet.

To get to the Caltrans web site, go to: http://www.dot.ca.gov

STATE OF CALIFORNIA
DEPARTMENT OF TRANSPORTATION

ELECTRICAL SYSTEMS (SIGNAL AND LIGHTING STANDARDS CASE 1 ARM LOADING WIND VELCITY=129 km/h ARM LENGTHS 4.6 m TO 9.1 m)

NO SCALE

ALL DIMENSIONS ARE IN MILLIMETERS UNLESS OTHERWISE SHOWN

ES-7C

07-16-04

Back to Table of Contents

DIST	COUNTY	ROUTE	KILOMETER POST TOTAL PROJECT	SHEET NO.	TOTAL SHEETS

Caltrans Metric

REGISTERED CIVIL ENGINEER

July 1, 2004
PLANS APPROVAL DATE

REGISTERED PROFESSIONAL ENGINEER Tiliat Sattar No. C42892 Exp. 03-31-06 CIVIL STATE OF CALIFORNIA

The State of California or its officers or agents shall not be responsible for the accuracy or completeness of electronic copies of this plan sheet.

To get to the Caltrans web site, go to: http://www.dot.ca.gov

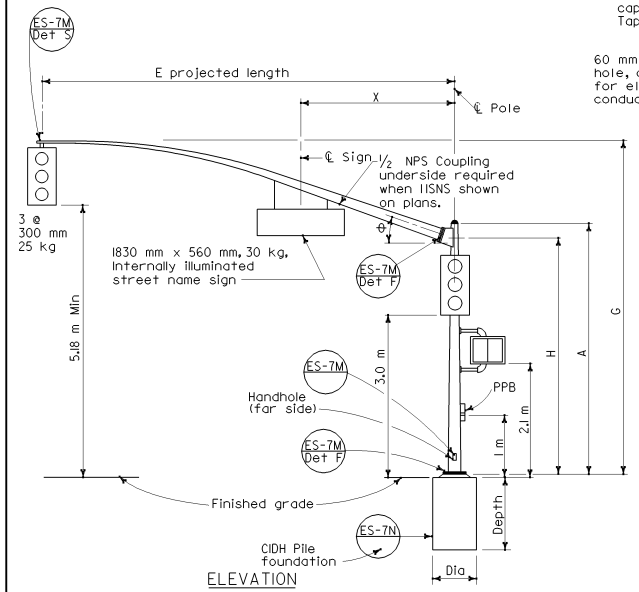

ELEVATION

TYPE 18-2-129

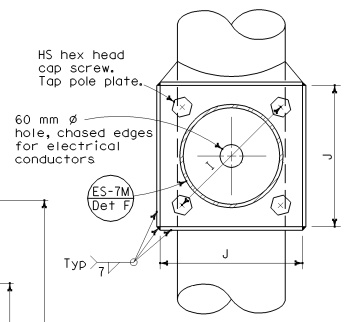

SECTION A-A

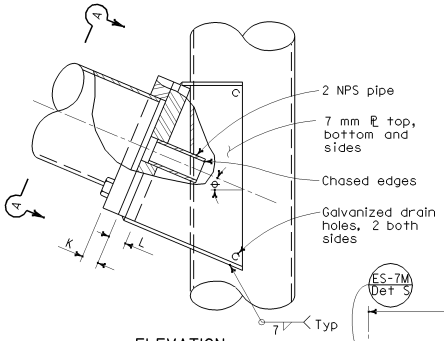

ELEVATION

SIGNAL ARM CONNECTION DETAILS

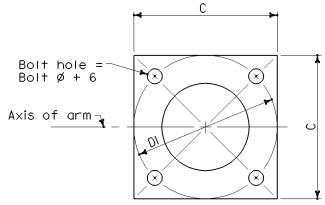

BASE PLATE

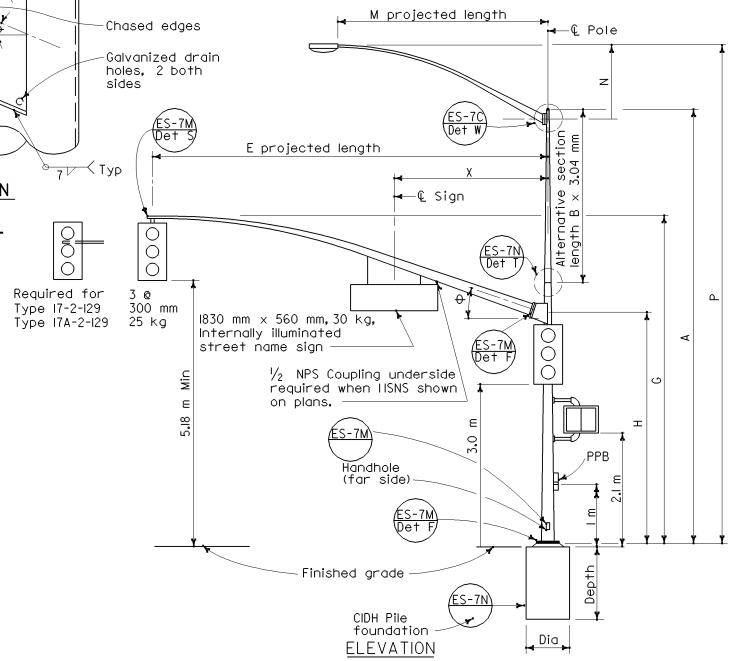

ELEVATION

TYPE 17-2-129, 19-2-129, 17A-2-129, 19A-2-129

SIGNAL ARM DATA											
E Projected Length	G Mounting Height	H	Min OD At Pole	Thickness	I Bolt Circle	HS Cap Screws	J Plate Size	K Arm ℙ Thickness	L Pole ℙ Thickness	⊖	X Max
m			mm								m
4.6	6.8 ±	4.9	168	4.55	305	32-7NC-76	305	32	38	23°	3.2
6.1	6.6 ±		168								
7.6	6.9 ±		186								
9.1	7.0 ±		203								

LUMINAIRE ARM DATA					
M Projected Length	N Rise	Min OD at Pole	Thickness	P Mounting Height 9.1 Pole	P Mounting Height 10.7 Pole
m	mm			m	
1.8	610 ±	83	3.04	9.5 ±	11.1 ±
2.4	760 ±	89		9.7 ±	11.3 ±
3.1	990 ±	98		9.9 ±	11.5 ±
3.7	1290 ±			10.2 ±	11.8 ±
4.6	1450 ±	108		10.4 ±	12.0 ±

HIGH STRENGTH CAP SCREWS

16 - 11NC - 45
- Length (mm)
- Threads (per inch)
- Size (mm)

Pole Type	Load Case	Wind Velocity km/h	POLE DATA: A Height	Min OD Base	Min OD Top	Thickness	Alternative Section B Length	Alternative Section Bottom	Alternative Section Top	BASE PLATE DATA: C	DI Bolt Circle	Thickness	Anchor Bolts Size	Luminaire Arm	Signal Arm	CIDH PILE FOUNDATION: Diameter	Depth	Reinforced
			m	mm			m	mm		mm				m		mm	m	
17-2-129	2	129	9.1	273	168	4.55	3.0	203	168	457	445	38	51 ø x 1067 x 152	1.8-4.6 [3.7]	4.6 to 9.1	760	2.2	Yes
17A-2-129			10.7		151		4.6		151					1.8-4.6 [4.6]				
18-2-129			5.2		214		None							None				
19-2-129			9.1		168	6.07	3.0	203	168					1.8-4.6 [3.7]				
19A-2-129			10.7		151		4.6		151					1.8-4.6 [4.6]				

☐ Indicates arm length to be used unless otherwise noted on plans.

STATE OF CALIFORNIA
DEPARTMENT OF TRANSPORTATION

ELECTRICAL SYSTEMS (SIGNAL AND LIGHTING STANDARDS CASE 2 ARM LOADING WIND VELOCITY=129 km/h ARM LENGTHS 4.6 m TO 9.1 m)

NO SCALE

ALL DIMENSIONS ARE IN MILLIMETERS UNLESS OTHERWISE SHOWN

ES-7D

07-28-04

Back to Table of Contents

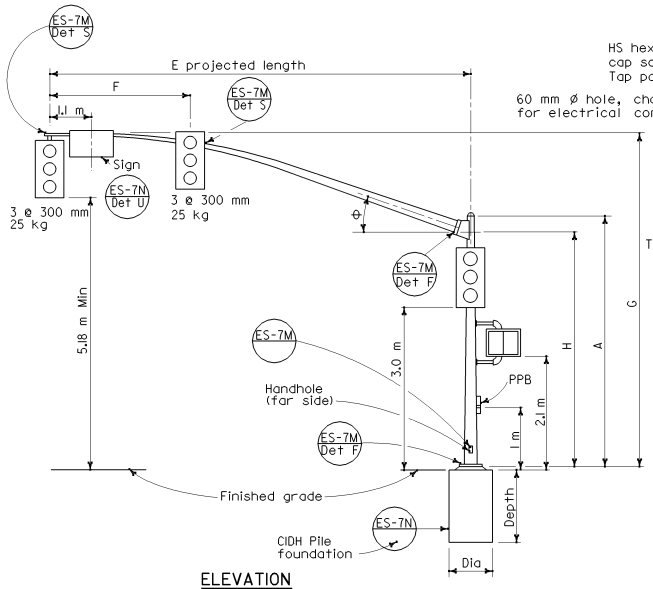

ELEVATION
TYPE 18-3-129,
23-3-129, 27-3-129

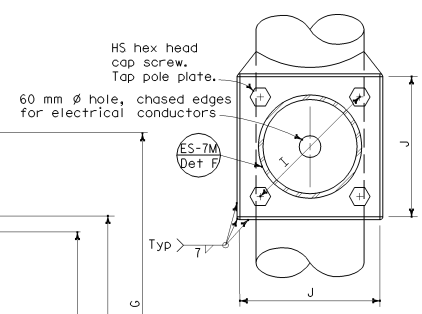

SECTION A-A

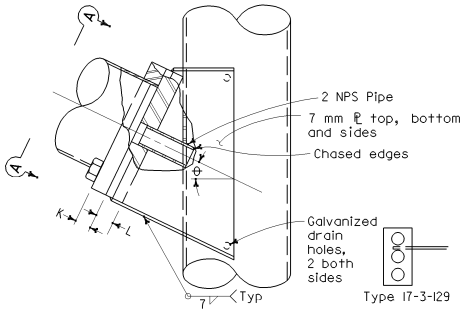

ELEVATION

SIGNAL ARM CONNECTION DETAILS

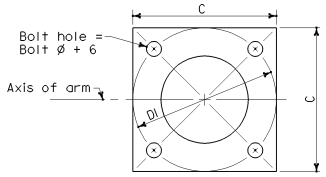

BASE PLATE

HIGH STRENGTH CAP SCREWS
16 - 11NC - 45
Length (mm)
Threads (per inch)
Size (mm)

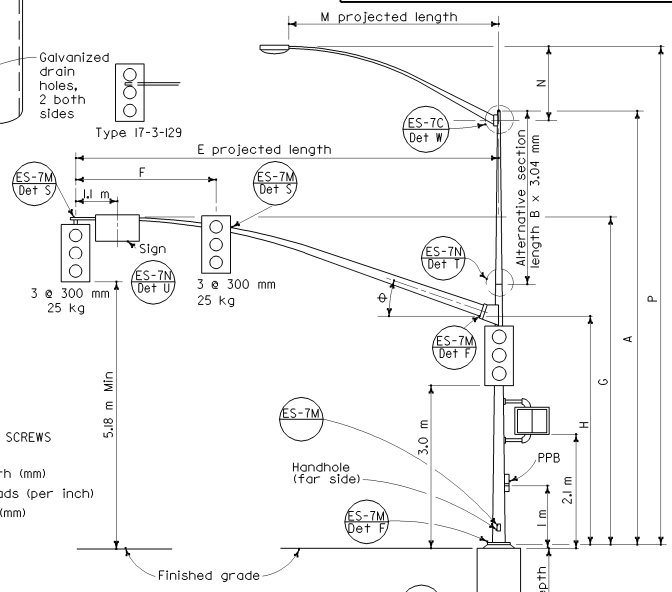

ELEVATION
TYPE 17-3-129, 24A-3-129,
19-3-129, 26-3-129,
19A-3-129, 26A-3-129, 24-3-129

SIGNAL ARM DATA											
E Projected Length	F Min Spacing	G Mounting Height	H	Min OD At Pole	Thickness	I Bolt Circle	HS Cap Screws	J Plate Size	K Arm ℞ Thickness	L Pole ℞ Thickness	θ
m				mm							
4.6	2.5	6.8 ±	4.9	168	4.55	305	32-7NC-76	305	32	38	23°
6.1		6.6 ±		178							
7.6	3.7	6.9 ±		186	6.07						
9.1		7.0 ±		203							
10.7	4.3			222		330		330	38	45	21°
12.2	4.6			238							15°
13.7		7.2 ±		256							

LUMINAIRE ARM DATA					
M Projected Length	N Rise	Min OD at Pole	Thickness	P Mounting Height 9.1 Pole	P Mounting Height 10.7 Pole
m	mm			m	
1.8	610 ±	83	3.04	9.5 ±	11.1 ±
2.4	760 ±	89		9.7 ±	11.3 ±
3.1	990 ±	98		9.9 ±	11.5 ±
3.7	1290 ±			10.2 ±	11.8 ±
4.6	1450 ±	108		10.4 ±	12.0 ±

Pole Type	Load Case	Wind Velocity km/h	POLE DATA: A Height	Min OD Base	Min OD Top	Thickness	Alternative Section B Length	Alternative Section Bottom	Alternative Section Top	BASE PLATE DATA: C	DI Bolt Circle	Thickness	Anchor Bolts Size	Luminaire Arm	Signal Arm	CIDH PILE FOUNDATION: Diameter	Depth	Reinforced
			m	mm			m	mm		mm				m		mm	m	
17-3-129	3	129	9.1	273	168	4.55	3.1	203	186	457	445	38	51øx1067x152	1.8-4.6 [3.7]	4.6, 6.1	914	2.7	Yes
18-3-129			5.2		214	6.07	None							None				
19-3-129			9.1	305	200		3.1	235	200					1.8-4.6 [3.7]	7.6 or [9.1]			
19A-3-129			10.7		183		4.6		183					1.8-4.6 [4.6]				
23-3-129			5.2		245		None							None	10.7			
24-3-129			9.1		200		3.1	235	200					1.8-4.6 [3.7]				
24A-3-129			10.7		183		4.6		183					1.8-4.6 [4.6]				
26-3-129			9.1		203	7.94	3.1	238	203					1.8-4.6 [3.7]				
26A-3-129			10.7	308	186		4.6		186					1.8-4.6 [4.6]	12.2 or [13.7]			
27-3-129			5.2		248		None							None				

☐ Indicates arm length to be used unless otherwise noted on plans.

DIST	COUNTY	ROUTE	KILOMETER POST TOTAL PROJECT	SHEET NO.	TOTAL SHEETS

Caltrans Metric

REGISTERED CIVIL ENGINEER

July 1, 2004
PLANS APPROVAL DATE

REGISTERED PROFESSIONAL ENGINEER Tillat Sattar No. C42892 Exp. 03-31-06 CIVIL STATE OF CALIFORNIA

The State of California or its officers or agents shall not be responsible for the accuracy or completeness of electronic copies of this plan sheet.

To get to the Caltrans web site, go to: http://www.dot.ca.gov

STATE OF CALIFORNIA
DEPARTMENT OF TRANSPORTATION

ELECTRICAL SYSTEMS (SIGNAL AND LIGHTING STANDARDS CASE 3 ARM LOADING WIND VELOCITY=129 km/h ARM LENGTHS 4.6 m TO 13.7 m)

NO SCALE

ALL DIMENSIONS ARE IN MILLIMETERS UNLESS OTHERWISE SHOWN

ES-7E

07-16-04

Back to Table of Contents

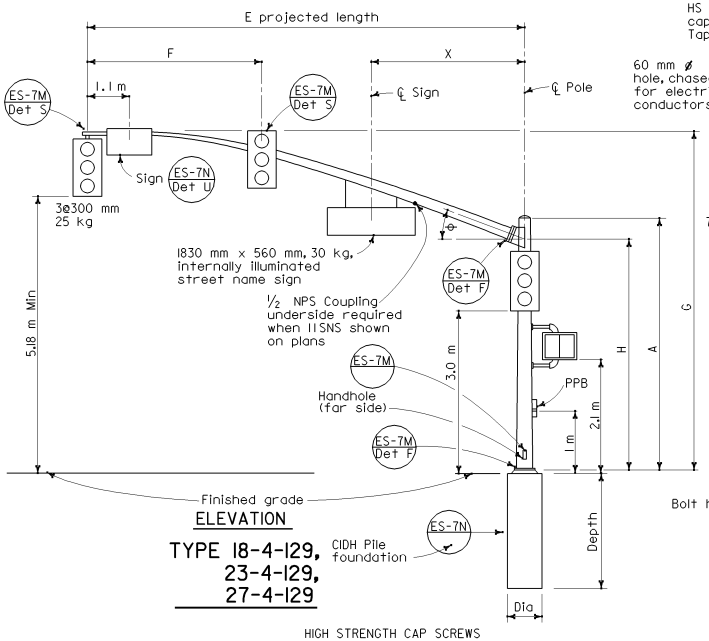

ELEVATION

TYPE 18-4-129, 23-4-129, 27-4-129

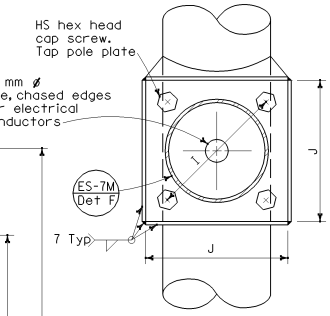

SECTION A-A

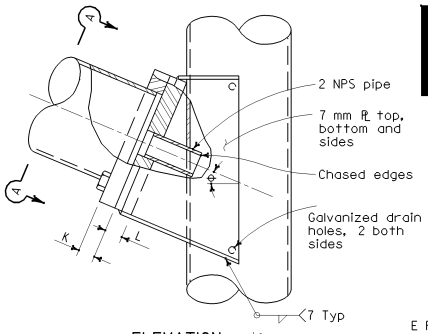

ELEVATION

SIGNAL ARM CONNECTION DETAILS

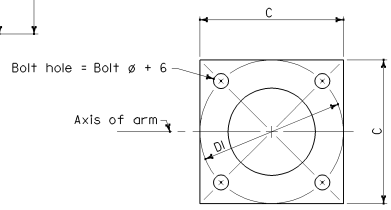

BASE PLATE

HIGH STRENGTH CAP SCREWS

16 - 11NC - 45

Length (mm)

Threads (per inch)

Size (mm)

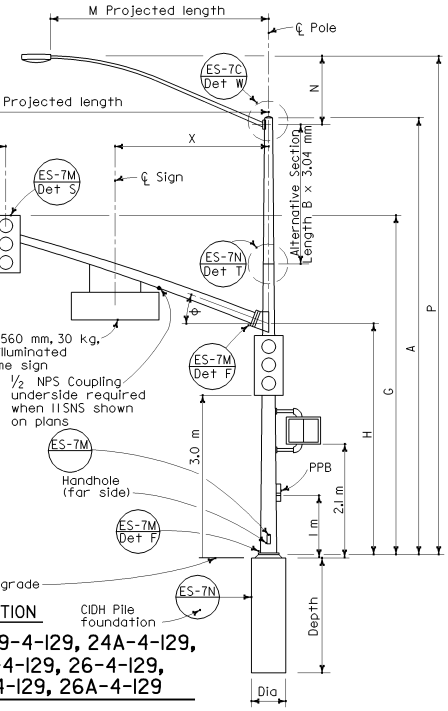

ELEVATION

TYPE 19-4-129, 24A-4-129, 19A-4-129, 26-4-129, 24-4-129, 26A-4-129

SIGNAL ARM DATA

E Projected Length	F Min Spacing	G Mounting Height	H	Min OD At Pole	Thickness	I Bolt Circle	HS Cap Screws	J Plate Size	K Arm ℞ Thickness	L Pole ℞ Thickness	⊖	X Max
m				mm								m
7.6	3.1	6.9 ±	4.88	186	6.07	305	32-7NC-76	305	32	38	23°	3.2
9.1	3.7	7.0 ±		203								
10.7	4.3			222		343		343	38	45	21°	
12.2	4.6			238							15°	4.0
13.7		7.2 ±		260								

LUMINAIRE ARM DATA

M Projected Length	N Rise	Min OD at Pole	Thickness	P Mounting Height 9.1 Pole	P Mounting Height 10.7 Pole
m	mm			m	
1.8	610 ±	83	3.04	9.5 ±	11.1 ±
2.4	760 ±	89		9.7 ±	11.3 ±
3.1	990 ±	98		9.9 ±	11.5 ±
3.7	1290 ±			10.2 ±	11.8 ±
4.6	1450 ±	108		10.4 ±	12.0 ±

Pole Type	Load Case	Wind Velocity km/h	POLE DATA: A Height	Min OD Base	Min OD Top	Thickness	Alternative Section B Length	Alternative Section Bottom	Alternative Section Top	BASE PLATE DATA: C	DI Bolt Circle	Thickness	Anchor Bolts Size	Luminaire Arm	Signal Arm	CIDH PILE FOUNDATION: Diameter	Depth	Reinforced
			m	mm			m	mm		mm				m		mm	m	
18-4-129	4	129	5.2	305	229	6.07	None	238		457	457	38	51ø x 1067 x 152	None	7.6 or 9.1	914	2.7	Yes
19-4-129			9.1		203		3.1		203					1.8-4.6 [3.7]				
19A-4-129			10.7		186		4.6		186					1.8-4.6 [4.6]				
23-4-129			5.2		229		None	238						None	10.7			
24-4-129			9.1		203		3.1		203					1.8-4.6 [3.7]				
24A-4-129			10.7		186		4.6		186					1.8-4.6 [4.6]				
26-4-129			9.1	318	203	7.94	3.1	248	213					1.8-4.6 [3.7]	12.2 or [13.7]			
26A-4-129			10.7		186		4.6		196					1.8-4.6 [4.6]				
27-4-129			5.2		248		None							None				

[ ] Indicates arm length to be used unless otherwise noted on plans.

DIST	COUNTY	ROUTE	KILOMETER POST TOTAL PROJECT	SHEET NO.	TOTAL SHEETS

REGISTERED CIVIL ENGINEER

July 1, 2004
PLANS APPROVAL DATE

REGISTERED PROFESSIONAL ENGINEER Iliat Sattar NO. C42892 Exp. 03-31-06 CIVIL STATE OF CALIFORNIA

The State of California or its officers or agents shall not be responsible for the accuracy or completeness of electronic copies of this plan sheet.

To get to the Caltrans web site, go to: http://www.dot.ca.gov

STATE OF CALIFORNIA
DEPARTMENT OF TRANSPORTATION

ELECTRICAL SYSTEMS (SIGNAL AND LIGHTING STANDARDS CASE 4 ARM LOADING WIND VELOCITY=129 km/h ARM LENGTHS 7.6 m TO 13.7 m)

NO SCALE

ALL DIMENSIONS ARE IN MILLIMETERS UNLESS OTHERWISE SHOWN

ES-7F

07-16-04

Back to Table of Contents

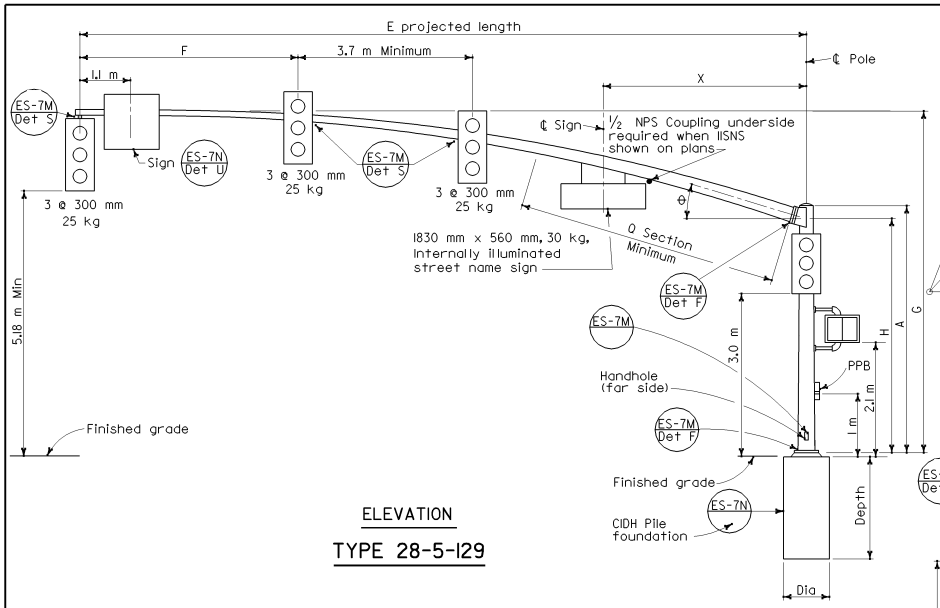

ELEVATION

TYPE 28-5-129

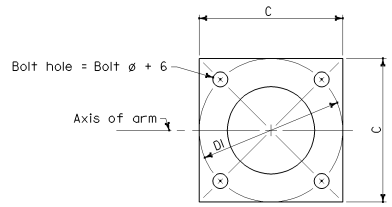

BASE PLATE

HIGH STRENGTH CAP SCREWS

16 - IINC - 45

Length (mm)
Threads (per inch)
Size (mm)

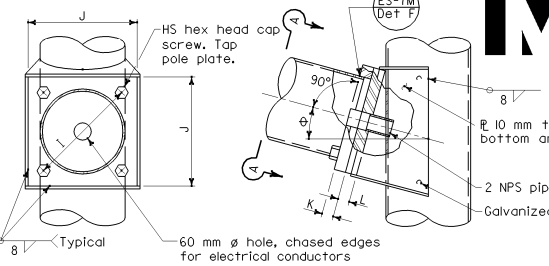

SECTION A-A

ELEVATION

SIGNAL ARM CONNECTION DETAILS

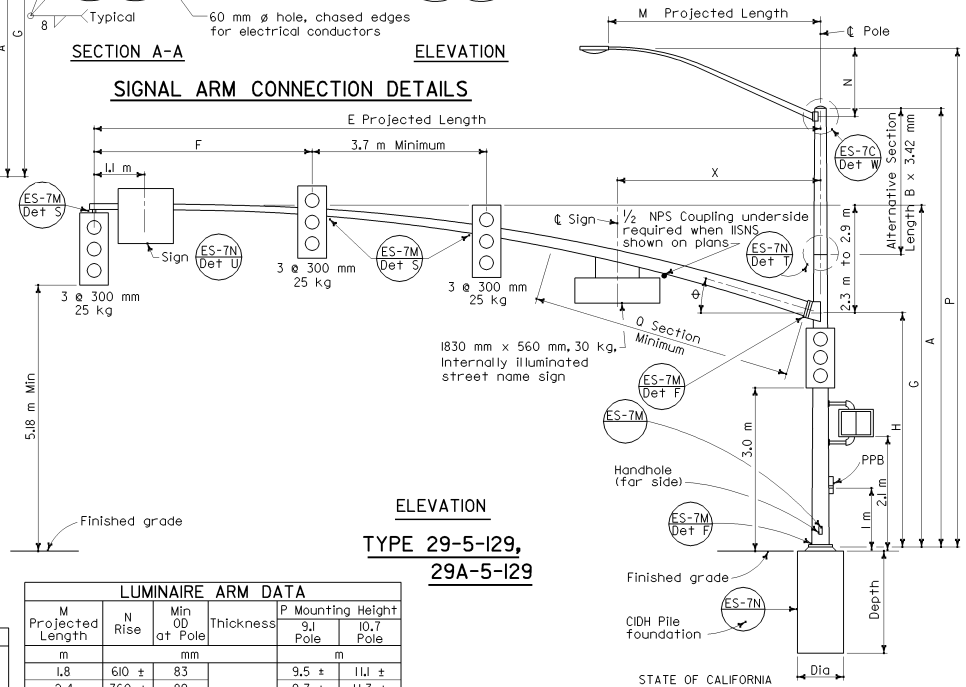

ELEVATION

TYPE 29-5-129, 29A-5-129

SIGNAL ARM DATA														
E Projected Length	F Min Spacing	G Mounting Height	H	Min OD At Pole	Thickness	I Bolt Circle	HS Cap Screws	J Plate Size	K Arm ℄ Thickness	L Pole ℄ Thickness	θ	Q SECTION Length	Q SECTION Thickness	X Max
m				mm								m	mm	m
15.2	4.6	7.2 to 7.8	4.9	291	4.6	406	38-6NC-83	406	45	45	15°	5.5	6.1	4.3
16.8				311								7.0		

LUMINAIRE ARM DATA						
M Projected Length	N Rise	Min OD at Pole	Thickness	P Mounting Height 9.1 Pole	P Mounting Height 10.7 Pole
m	mm			m	
1.8	610 ±	83	3.04	9.5 ±	11.1 ±
2.4	760 ±	89		9.7 ±	11.3 ±
3.1	990 ±	98		9.9 ±	11.5 ±
3.7	1290 ±			10.2 ±	11.8 ±
4.6	1450 ±	108		10.4 ±	12.0 ±

Pole Type	Load Case	Wind Velocity km/h	POLE DATA: A Height	Min OD Base	Min OD Top	Thickness	Alternative Section B Length	Alternative Section Bottom	Alternative Section Top	BASE PLATE DATA: C	DI Bolt Circle	D2	Thickness	Anchor Bolts Size	Luminaire Arm	Signal Arm	CIDH PILE FOUNDATION: Diameter	Depth	Reinforced
			m	mm			m	mm		mm					m		mm	m	
28-5-129	5	129	5.2	356	297	7.94	None	286	251	533	533		45	51ø x 1067 x 152	None	15.2 or 16.8	914	2.8	Yes
29-5-129			9.1		251		3.1								1.8 - [4.6]				
29A-5-129			10.7		233		4.6		233	584	584								

☐ Indicates arm length to be used unless otherwise noted on plans.

Caltrans Metric

DIST	COUNTY	ROUTE	KILOMETER POST TOTAL PROJECT	SHEET NO.	TOTAL SHEETS

REGISTERED CIVIL ENGINEER

July 1, 2004
PLANS APPROVAL DATE

REGISTERED PROFESSIONAL ENGINEER Tillat Sattar No. C42892 Exp. 03-31-06 CIVIL STATE OF CALIFORNIA

The State of California or its officers or agents shall not be responsible for the accuracy or completeness of electronic copies of this plan sheet.

To get to the Caltrans web site, go to: http://www.dot.ca.gov

STATE OF CALIFORNIA
DEPARTMENT OF TRANSPORTATION

ELECTRICAL SYSTEMS (SIGNAL AND LIGHTING STANDARDS CASE 5 ARM LOADING WIND VELOCITY=129 km/h ARM LENGTHS 15.2 m TO 16.8 m)

NO SCALE

ALL DIMENSIONS ARE IN MILLIMETERS UNLESS OTHERWISE SHOWN

ES-7G

07-16-04

Back to Table of Contents

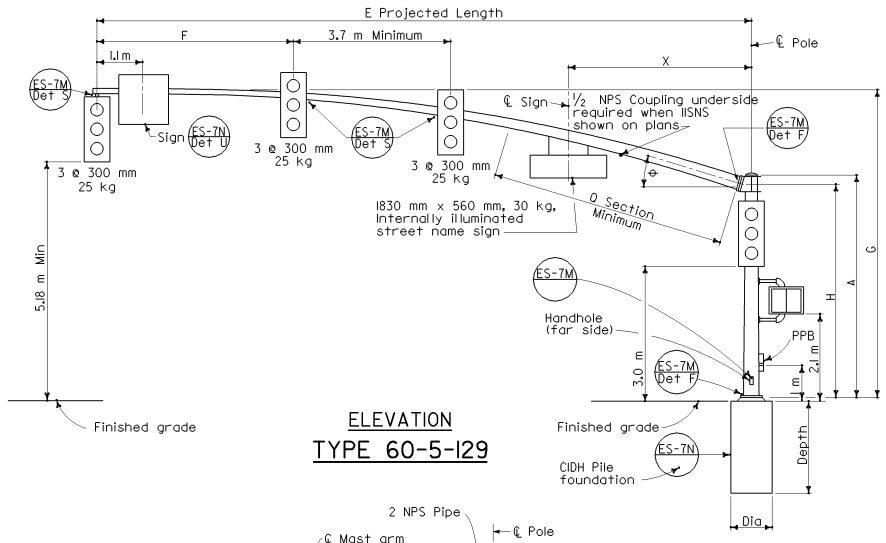

ELEVATION

TYPE 60-5-129

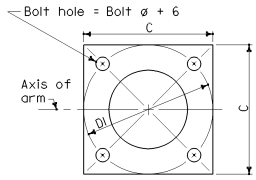

BASE PLATE

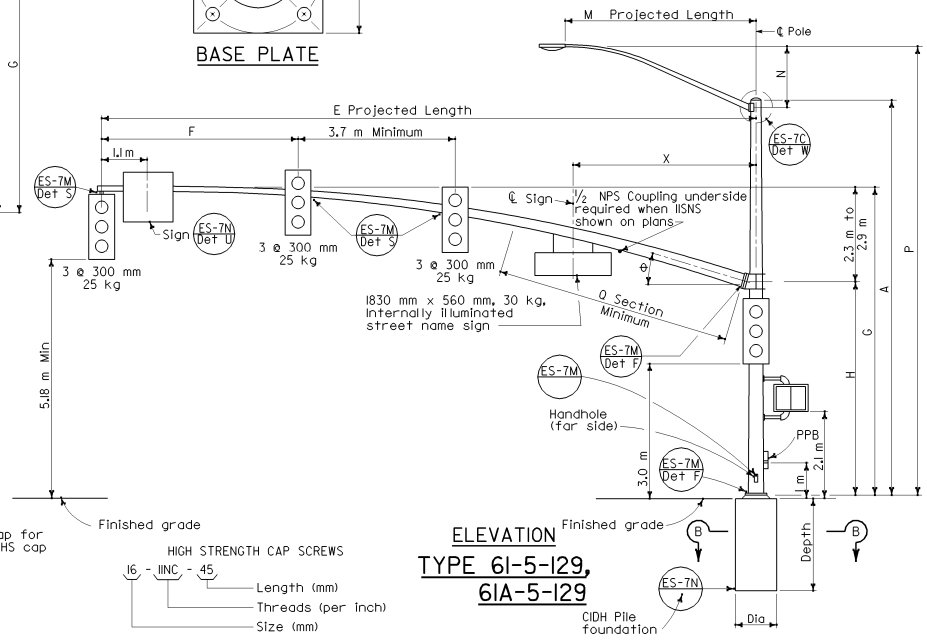

ELEVATION

TYPE 61-5-129, 61A-5-129

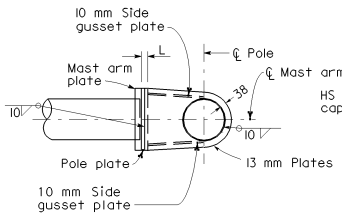

PLAN

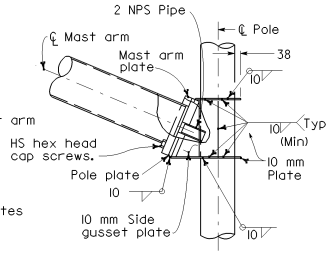

ELEVATION

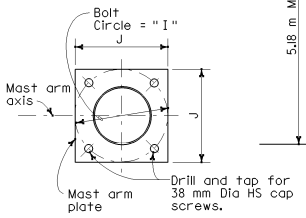

MAST ARM PLATE

HIGH STRENGTH CAP SCREWS

16 - 11NC - 45

Length (mm)

Threads (per inch)

Size (mm)

SIGNAL ARM CONNECTION DETAIL

NOTE

The radial separation between the face of the pole and the adjacent insides of the top and bottom gusset plates shall not exceed 5 mm. Fillet weld size to be increased by amount of gap.

SIGNAL ARM DATA															
E Projected Length	F Min Spacing	G Mounting Height	H	Min OD At Pole	Thickness	I Bolt Circle	HS Cap Screws	J Plate Size	K Arm ℙ Thickness	L Pole ℙ Thickness	θ	Q SECTION Length	Q SECTION Thickness	X Max
m				mm								m	mm	m
18.2	4.6	7.2 to 7.8	4.9	343	4.6	508	38-6NC-102	508	51	51	15°	7.3	6.1	4.3
19.8				343	6.1							8.8	7.9	

LUMINAIRE ARM DATA					
M Projected Length	N Rise	Min OD at Pole	Thickness	P Mounting Height 9.1 Pole	P Mounting Height 10.7 Pole
m	mm			m	
1.8	610 ±	83	3.04	9.6 ±	11.1 ±
2.4	760 ±	89		9.8 ±	11.3 ±
3.1	990 ±	98		10.0 ±	11.5 ±
3.7	1290 ±			10.3 ±	11.8 ±
4.6	1450 ±	108		10.5 ±	12.0 ±

Pole Type	Load Case	Wind Velocity km/h	POLE DATA A Height	POLE DATA Min OD Base	POLE DATA Min OD Top	POLE DATA Thickness	BASE PLATE DATA C	BASE PLATE DATA DI Bolt Circle	BASE PLATE DATA Thickness	BASE PLATE DATA Anchor Bolts Size	Luminaire Arm	Signal Arm	CIDH PILE FOUNDATION Diameter	CIDH PILE FOUNDATION Depth	CIDH PILE FOUNDATION Reinforced
			m	mm			mm				m		mm	m	
60-5-129	5	129	5.2	406	347	7.94	584	584	51	57 ø x 1524 x 152	None	18.2 or 19.8	914	4.9	Yes
61-5-129			9.1		301						1.8-[4.6]				
61A-5-129			10.7		282										

[ ] indicates arm length to be used unless otherwise noted on plans.

Caltrans Metric

DIST	COUNTY	ROUTE	KILOMETER POST TOTAL PROJECT	SHEET NO.	TOTAL SHEETS

REGISTERED CIVIL ENGINEER

July 1, 2004

PLANS APPROVAL DATE

REGISTERED PROFESSIONAL ENGINEER Tiliat Sattar NO. C42892 Exp. 03-31-06 CIVIL STATE OF CALIFORNIA

The State of California or its officers or agents shall not be responsible for the accuracy or completeness of electronic copies of this plan sheet.

To get to the Caltrans web site, go to: http://www.dot.ca.gov

STATE OF CALIFORNIA
DEPARTMENT OF TRANSPORTATION

ELECTRICAL SYSTEMS (SIGNAL AND LIGHTING STANDARDS CASE 5 ARM LOADING WIND VELOCITY=129 km/h ARM LENGTHS 18.2 m TO 19.8 m)

NO SCALE

ALL DIMENSIONS ARE IN MILLIMETERS UNLESS OTHERWISE SHOWN

ES-7H

07-16-04

Back to Table of Contents

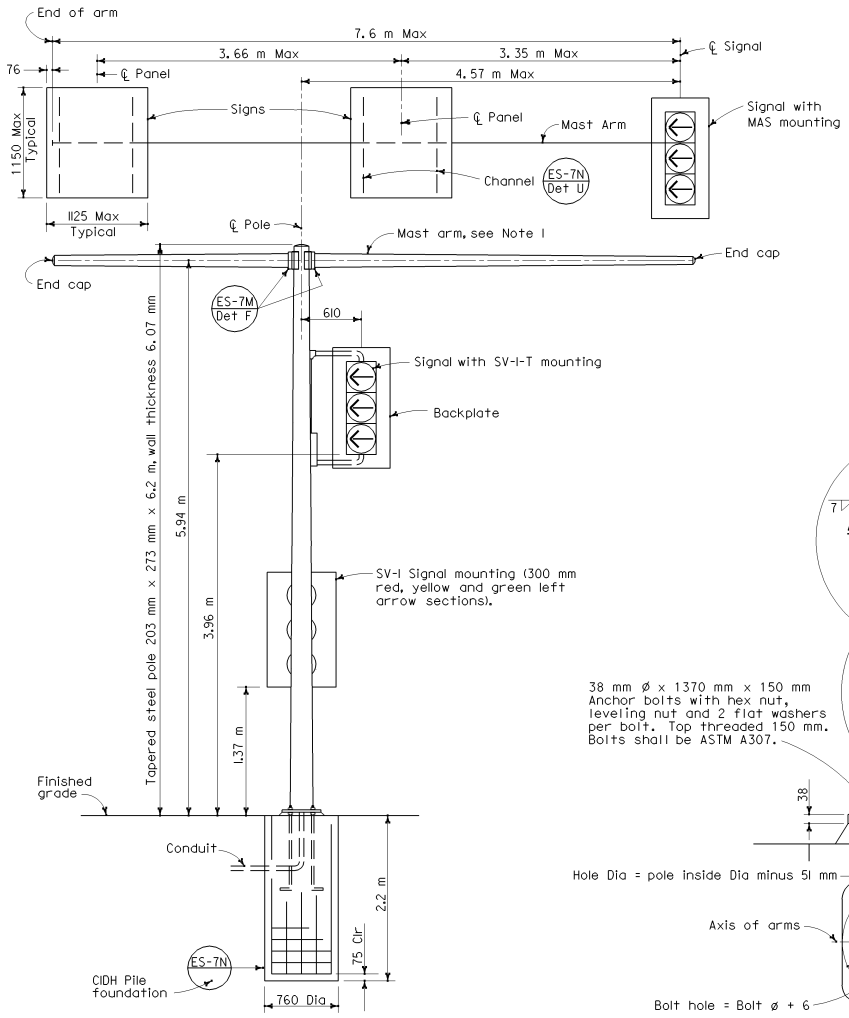

ELEVATION

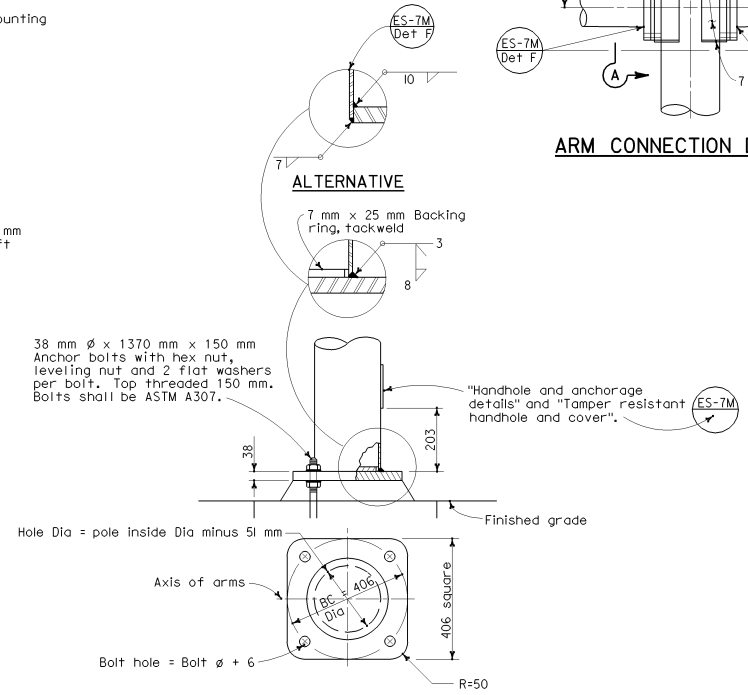

BASE PLATE

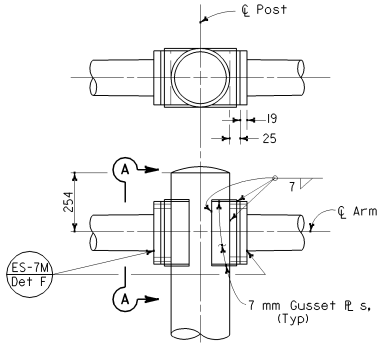

ARM CONNECTION DETAILS

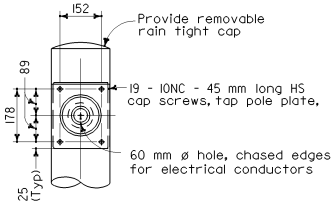

SECTION A-A

HIGH STRENGTH CAP SCREWS

16 - 11NC - 45

- 45 — Length (mm)
- 11NC — Threads (per inch)
- 16 — Size (mm)

NOTES

1. Round tapered steel tube thickness 4.55 mm with maximum taper of 11.67 mm/m and 140 mm OD minimum at pole.
2. Cap screws shall be tightened by the turn-of-nut method, 1/3 turn from snug tight condition. No washer will be required.
3. For arm lengths and signs or signals required each side of ℄ pole, see Signal plans.
4. Mast arm signal to be MAS mounted on pipe tenon Detail S on Standard Plan ES-7M.
5. Sign area shall not exceed 1.3 m^2 for each sign.
6. If 2 signs are placed on one side of pole, one sign must be placed adjacent to pole.

STATE OF CALIFORNIA
DEPARTMENT OF TRANSPORTATION

ELECTRICAL SYSTEMS (SIGNAL AND SIGN STANDARDS TYPE 33 LEFT TURN)

NO SCALE

ALL DIMENSIONS ARE IN MILLIMETERS UNLESS OTHERWISE SHOWN

ES-7I

Caltrans Metric

DIST	COUNTY	ROUTE	KILOMETER POST TOTAL PROJECT	SHEET NO.	TOTAL SHEETS

REGISTERED CIVIL ENGINEER

July 1, 2004
PLANS APPROVAL DATE

REGISTERED PROFESSIONAL ENGINEER — Tillat Sattar — No. C42892 — Exp. 03-31-06 — CIVIL — STATE OF CALIFORNIA

The State of California or its officers or agents shall not be responsible for the accuracy or completeness of electronic copies of this plan sheet.

To get to the Caltrans web site, go to: http://www.dot.ca.gov

07-28-04

Back to Table of Contents

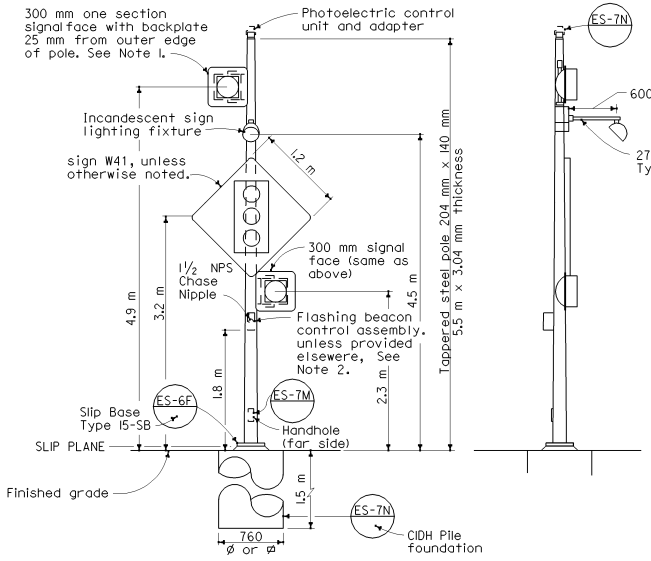

FRONT VIEW

SIDE VIEW

TYPE 15-FBS

ADVANCE FLASHING BEACON WITH SLIP BASE INSTALLATION

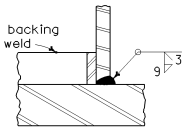

DETAIL B

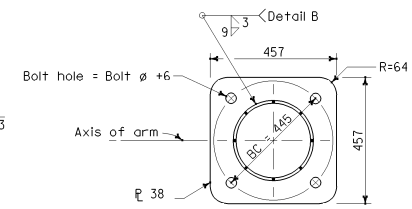

BASE PLATE

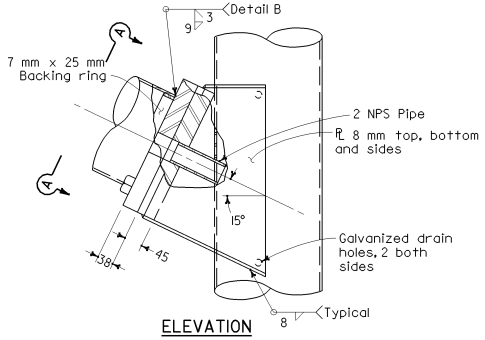

ELEVATION

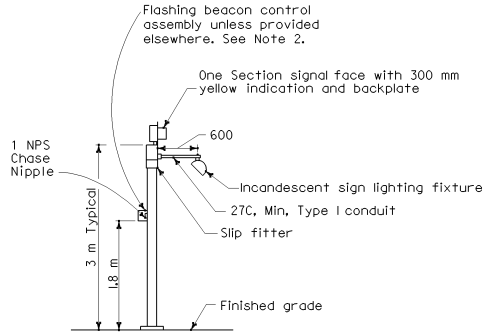

TYPE 1-A, 1-B, 1-C AND 1-D

ADVANCE FLASHING BEACON INSTALLATION

(See Project Plans for type of standard to be installed)

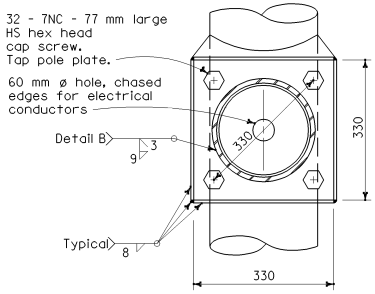

SECTION A-A

SIGNAL ARM CONNECTION DETAILS

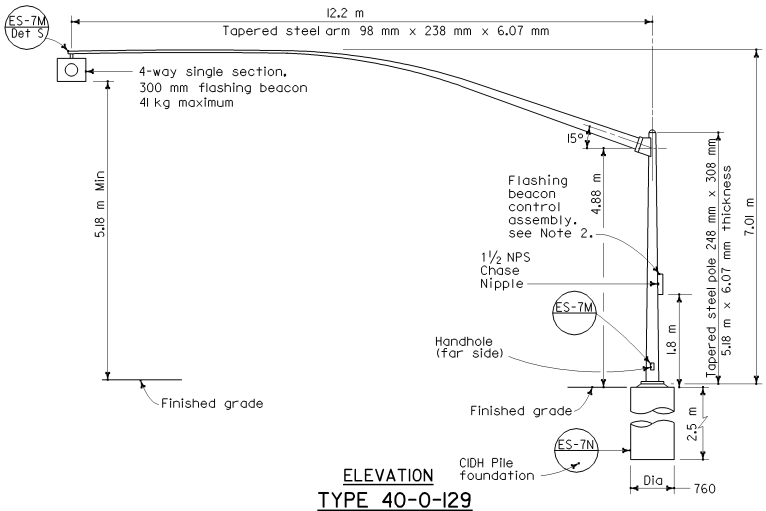

ELEVATION

TYPE 40-0-129

HIGH STRENGTH CAP SCREWS

16 - 11NC - 45

- Length (mm)
- Threads (per inch)
- Size (mm)

NOTES

1. See Standard Plans ES-4D and ES-4E for attachment fitting details.
2. For wiring diagram, see Standard Plan ES-3B.

Caltrans Metric

DIST	COUNTY	ROUTE	KILOMETER POST TOTAL PROJECT	SHEET NO.	TOTAL SHEETS

REGISTERED CIVIL ENGINEER

July 1, 2004
PLANS APPROVAL DATE

REGISTERED PROFESSIONAL ENGINEER Tiliat Sattar NO. C42892 Exp. 03-31-2006 CIVIL STATE OF CALIFORNIA

The State of California or its officers or agents shall not be responsible for the accuracy or completeness of electronic copies of this plan sheet.

To get to the Caltrans web site, go to: http://www.dot.ca.gov

STATE OF CALIFORNIA
DEPARTMENT OF TRANSPORTATION

ELECTRICAL SYSTEMS (SIGNAL AND LIGHTING STANDARDS ADVANCE FLASHING BEACONS)

NO SCALE

ALL DIMENSIONS ARE IN MILLIMETERS UNLESS OTHERWISE SHOWN

ES-7J

07-16-04

2004 Std PLAN ES-7J

Back to Table of Contents

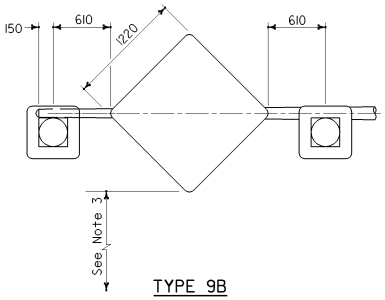

TYPE 9B

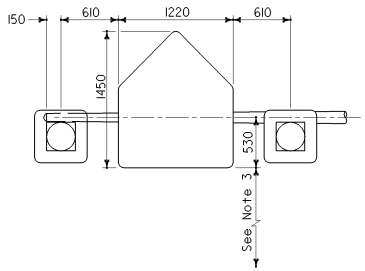

TYPE 9A

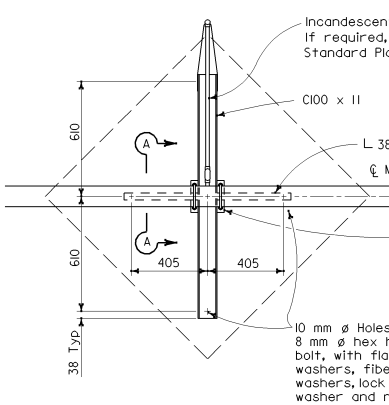

TYPE 9B

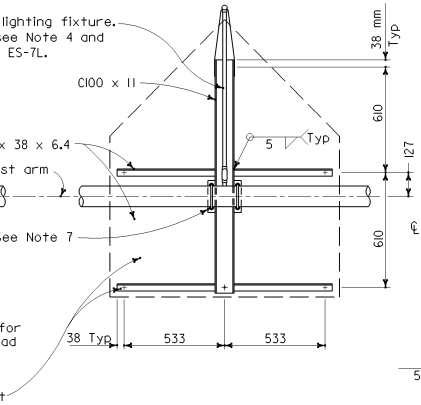

TYPE 9A

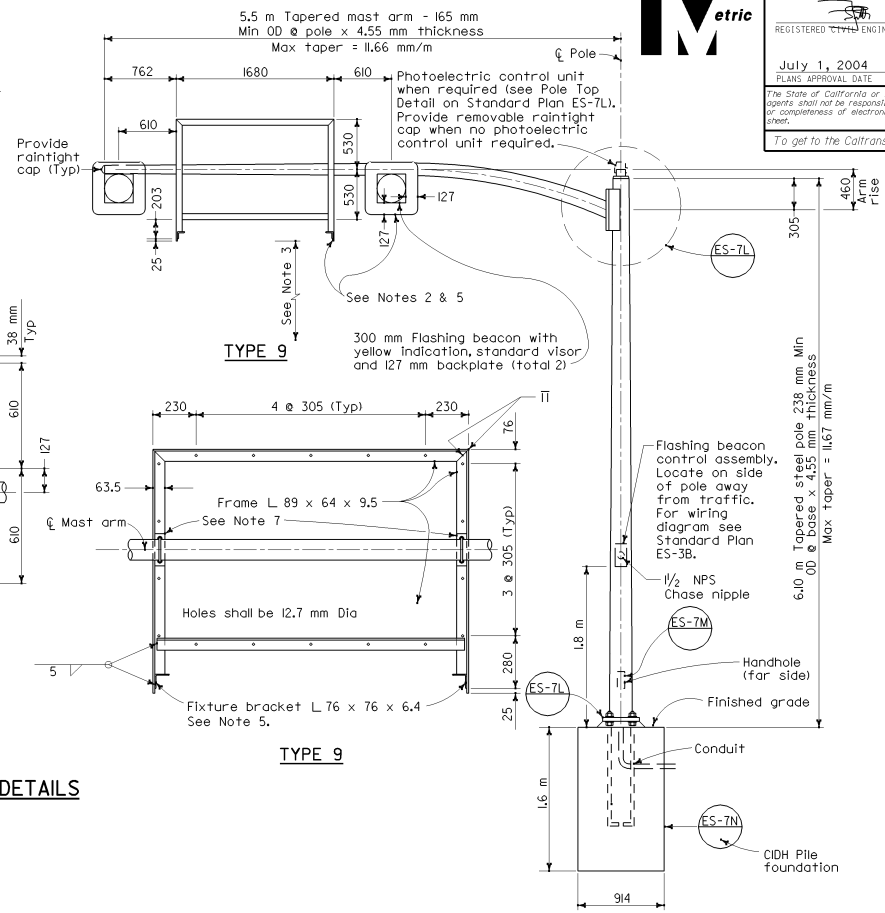

TYPE 9

ELEVATION

FRAME DETAILS

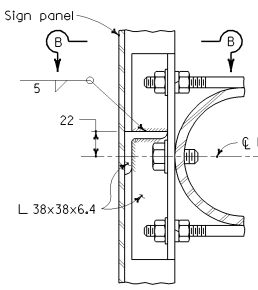

SECTION A-A

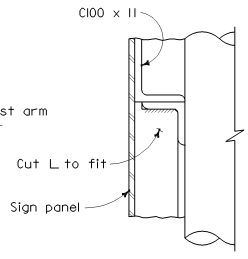

SECTION B-B

TYPE 9B

NOTES

1. Splices between fluorescent fixture sockets shall be waterproof.
2. Install flashing beacons and sign frame. Flashing beacons to be MAT mounted on pipe tenon. (See Standard Plan ES-7M, Detail S)
3. Vertical clearance to be 5.2 m minimum between roadway and bottom of signal panel or lighting fixture bracket.
4. Special Provisions or plans will indicate when incandescent lighting fixture is required on Type 9A or 9B sign frames.
5. Type 9 sign frames shall be provided with a 910 mm fluorescent fixture. For fluorescent lighting details see Standard Plan ES-15B.
6. Anchor bolts shall be ASTM A-307.
7. See Standard Plan ES-7L for sign frame mounting details.

Caltrans Metric

DIST	COUNTY	ROUTE	KILOMETER POST TOTAL PROJECT	SHEET NO.	TOTAL SHEETS

REGISTERED CIVIL ENGINEER

July 1, 2004
PLANS APPROVAL DATE

REGISTERED PROFESSIONAL ENGINEER Tillat Sattar No. C42892 Exp. 03-31-2006 CIVIL STATE OF CALIFORNIA

The State of California or its officers or agents shall not be responsible for the accuracy or completeness of electronic copies of this plan sheet.

To get to the Caltrans web site, go to: http://www.dot.ca.gov

STATE OF CALIFORNIA
DEPARTMENT OF TRANSPORTATION

ELECTRICAL SYSTEMS (SIGNAL, LIGHTING AND ELECTRICAL SYSTEMS CANTILEVER FLASHING BEACON TYPES 9, 9A AND 9B)

NO SCALE

ALL DIMENSIONS ARE IN MILLIMETERS UNLESS OTHERWISE SHOWN

ES-7K

07-16-04

Back to Table of Contents

DIST	COUNTY	ROUTE	KILOMETER POST TOTAL PROJECT	SHEET NO.	TOTAL SHEETS

REGISTERED CIVIL ENGINEER

July 1, 2004
PLANS APPROVAL DATE

REGISTERED PROFESSIONAL ENGINEER Tiliat Sattar No. C42892 Exp. 03-31-2006 CIVIL STATE OF CALIFORNIA

The State of California or its officers or agents shall not be responsible for the accuracy or completeness of electronic copies of this plan sheet.

To get to the Caltrans web site, go to: http://www.dot.ca.gov

Caltrans Metric

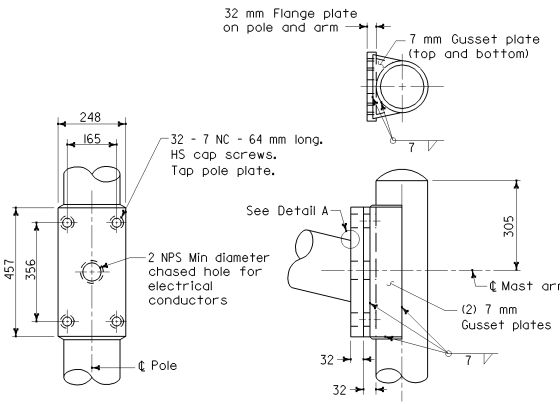

MAST ARM CONNECTION DETAILS

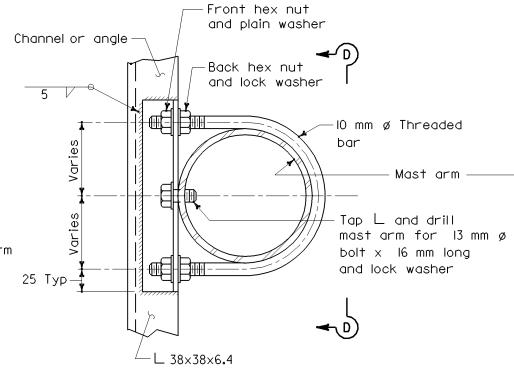

NOTE

Tighten front hex nuts first, then tighten back hex nuts.

NOTE

Lighting details not shown see Note 5 on Standard Plan ES-7K. Mounting to channel shown, mounting to angle similar.

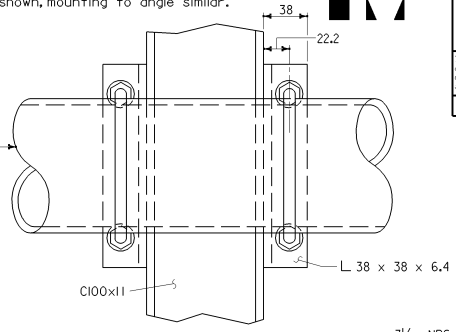

VIEW D-D

SIGN FRAME MOUNTING DETAILS

All types

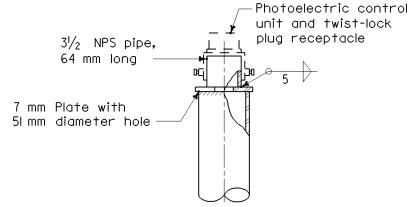

POLE TOP DETAIL

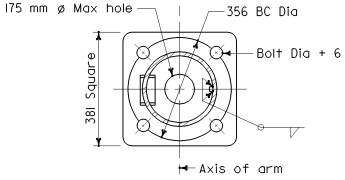

PLAN

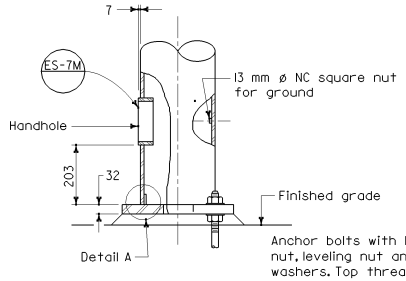

ELEVATION

BASE PLATE AND ANCHORAGE DETAILS

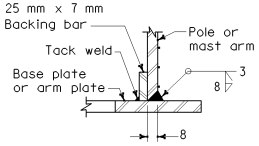

DETAIL A

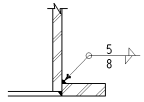

ALTERNATIVE DETAIL A

For pole-base plate only.

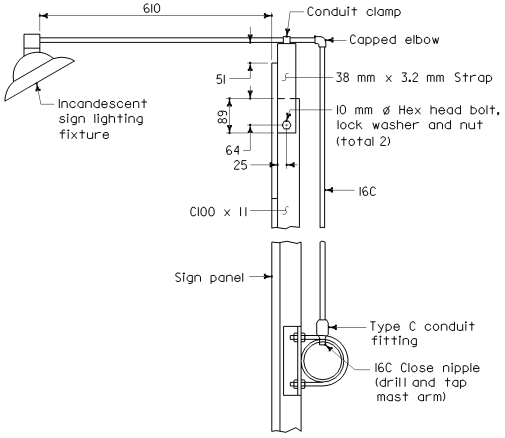

INCANDESCENT LIGHTING FIXTURE TYPES 9A AND 9B

See Note 4 on Standard Plan ES-7K.

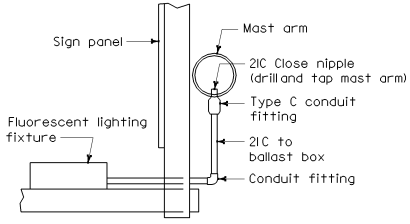

FLUORESCENT LIGHTING FIXTURE TYPE 9 FRAME

STATE OF CALIFORNIA
DEPARTMENT OF TRANSPORTATION

ELECTRICAL SYSTEMS (SIGNAL, LIGHTING AND ELECTRICAL SYSTEMS CANTILEVER FLASHING BEACON TYPES 9, 9A AND 9B)

NO SCALE

ALL DIMENSIONS ARE IN MILLIMETERS UNLESS OTHERWISE SHOWN

ES-7L

07-16-04

Back to Table of Contents

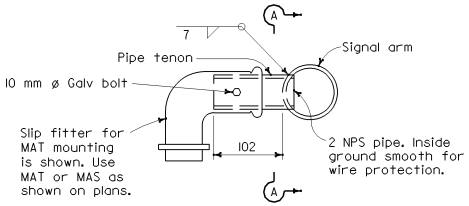

ES-4D

DETAIL S-SIDE TENON

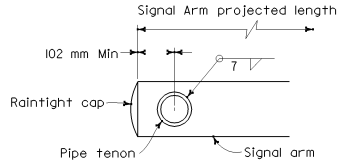

SECTION A-A

PIPE TENONS

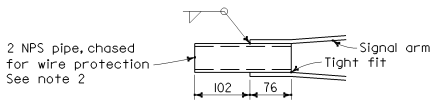

DETAIL TS-TIP TENON

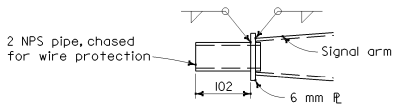

DETAIL TL-TIP TENON

This detail supersedes Detail S when so designated

IDENTIFICATION NUMBER

Attach a stamped metal tag with each pole's indentification number to shaft above handhole. 7 mm high number minimum.

A similar tag shall be attached to the top of the signal mast arm near the pole plate.

Sample Identification Number

Type | Load case | Design wind velocity | Signal arm length maximum | Standard plan year | Only for poles with fatigue resistant welds

19A - 3 - 129 - 9.1 - 99 - F

Use SL for special load case

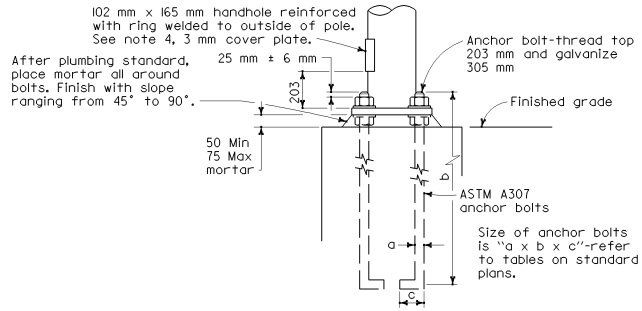

HANDHOLE AND ANCHORAGE DETAILS

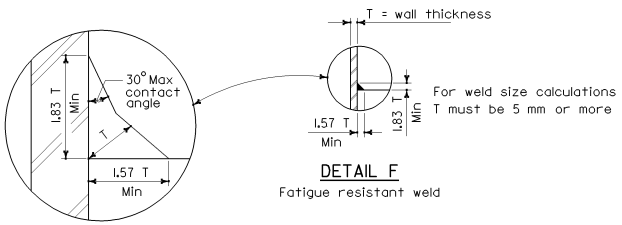

DETAIL F

Fatigue resistant weld

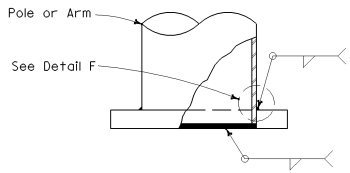

Weld Size	Wall Thickness
7	3.04
8	4.55
10	6.07
11	7.94
4	3.04
5	4.55
7	6.07
8	7.94

ELEVATION A

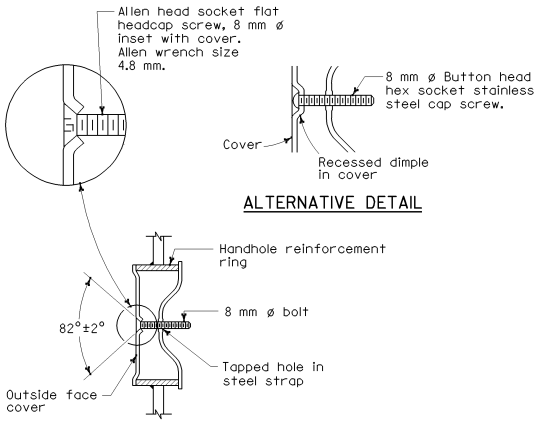

ALTERNATIVE DETAIL

TAMPER RESISTANT HANDHOLE COVER

GENERAL NOTES

SPECIFICATIONS

DESIGN : AASHTO Standard specifications for structural supports for highway signs, luminaires and traffic signals dated 2001.

Loading

WIND LOADINGS : 129 km/h AASHTO

Unit Stresses

STRUCTURAL STEEL : fy = 331 MPa (tapered sheet steel)
fy = 248 MPa unless noted otherwise noted

CONSTRUCTION : Standard Specifications and the Special Provisions

NOTES

1. ASTM A-307 anchor bolts are required for each pole. Provide a hex nut, leveling nut and 2 washers for each bolt.
2. Luminaire arms shall be round, tapered steel tubes, taper of 11.45 mm/m to 11.66 mm/m with an end section 60 mm OD for mounting hardware. Extensions of 2 NPS Standard pipe and 178 mm long may be used at the option of the manufacturer. When low pressure sodium luminaires are required, the extension shall be 381 mm.
3. Signal arms shall be round, tapered steel tubes, maximum taper 11.66 mm/m.
4. Handhole reinforcement ring shall be 6 mm x 51 mm for 3.04 mm to 6.07 mm poles, 10 mm x 51mm for 7.94 mm.
5. Handholes for lighting standards shall be located on the downstream side of the pole unless otherwise noted on the plans.
6. Detail F, fatigue resistant weld, is required at signal arm plate and pole base plate.
7. Cap screws shall be tightened by the turn-of-nut method 1/3 turn to form a snug tight condition. No washer will be required.
8. During pole erection, the post shall be raked as necessary with the use of leveling nuts to provide a plumb pole axis.
9. When Project Plans show a lesser number of signs and signals, the Project Plans shall prevail.
10. Outside diameter, wall thickness, and corresponding section properties at the base of traffic signal poles and arms as shown in the Standard Plans are minimums. Unless otherwise specified, alternative sections require approval by the Engineer.

Caltrans Metric

DIST	COUNTY	ROUTE	KILOMETER POST TOTAL PROJECT	SHEET NO.	TOTAL SHEETS

REGISTERED CIVIL ENGINEER

July 1, 2004
PLANS APPROVAL DATE

REGISTERED PROFESSIONAL ENGINEER Tilak Sattar No. C42892 Exp. 03-31-2006 CIVIL STATE OF CALIFORNIA

The State of California or its officers or agents shall not be responsible for the accuracy or completeness of electronic copies of this plan sheet.

To get to the Caltrans web site, go to: http://www.dot.ca.gov

STATE OF CALIFORNIA
DEPARTMENT OF TRANSPORTATION

ELECTRICAL SYSTEMS (SIGNAL AND LIGHTING STANDARDS DETAILS No. 1)

NO SCALE

ALL DIMENSIONS ARE IN MILLIMETERS UNLESS OTHERWISE SHOWN

ES-7M

07-16-04

Back to Table of Contents

DIST	COUNTY	ROUTE	KILOMETER POST TOTAL PROJECT	SHEET NO.	TOTAL SHEETS

REGISTERED CIVIL ENGINEER

July 1, 2004
PLANS APPROVAL DATE

REGISTERED PROFESSIONAL ENGINEER Tiliat Sattar NO. C42892 Exp. 03-31-2006 CIVIL STATE OF CALIFORNIA

The State of California or its officers or agents shall not be responsible for the accuracy or completeness of electronic copies of this plan sheet.

To get to the Caltrans web site, go to: http://www.dot.ca.gov

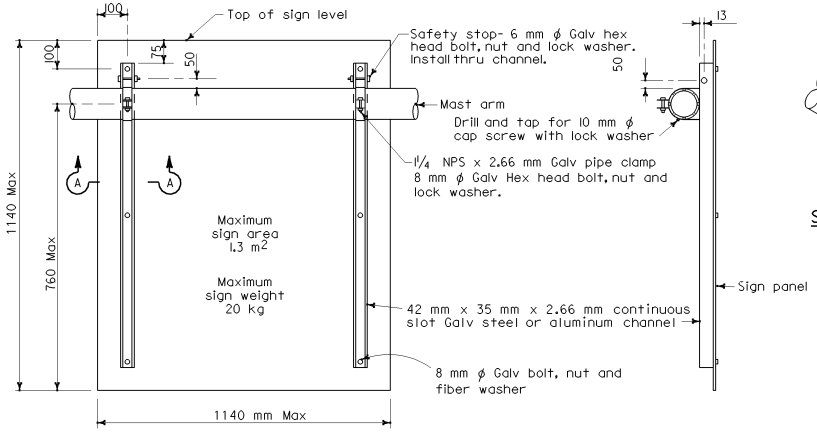

REAR VIEW

DETAIL U

SIDE VIEW

SIGN MOUNTING DETAILS

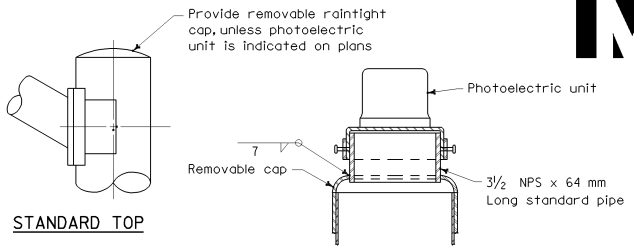

STANDARD TOP

MOUNTING ADAPTER FOR PHOTOELECTRIC UNIT

POLE TOP DETAILS

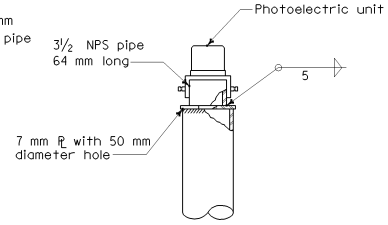

ALTERNATIVE MOUNTING ADAPTER

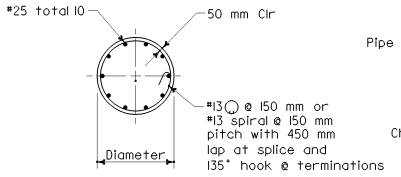

SECTION B-B

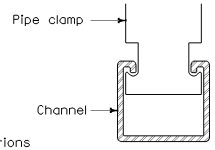

SECTION A-A

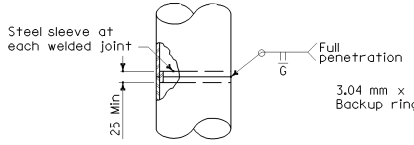

FOR UNIFORM TUBE THICKNESS

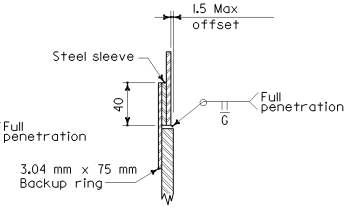

DETAIL T
AT TUBE THICKNESS CHANGE

POLE SPLICES

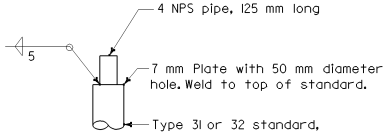

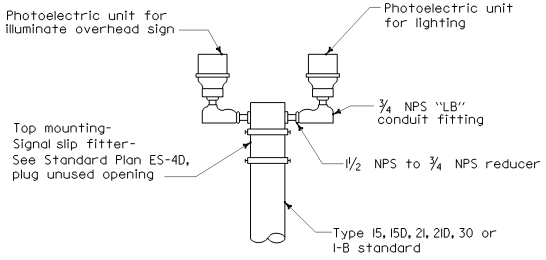

DUAL PHOTOELECTRIC UNIT MOUNTING DETAIL

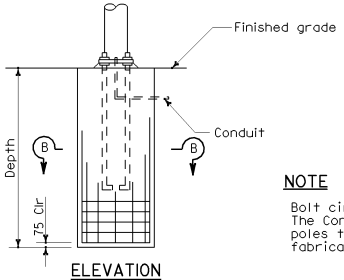

ELEVATION

CAST-IN-DRILLED HOLE PILE FOUNDATION

Reinforced Pile

NOTE

Bolt circles and anchor bolt sizes have been revised. The Contractor shall verify dependent dimensions for poles to be installed on existing foundations before fabricating the poles.

STATE OF CALIFORNIA
DEPARTMENT OF TRANSPORTATION

ELECTRICAL SYSTEMS (SIGNAL AND LIGHTING STANDARDS DETAILS No. 2)

NO SCALE

ALL DIMENSIONS ARE IN MILLIMETERS UNLESS OTHERWISE SHOWN

ES-7N

07-16-04

Back to Table of Contents

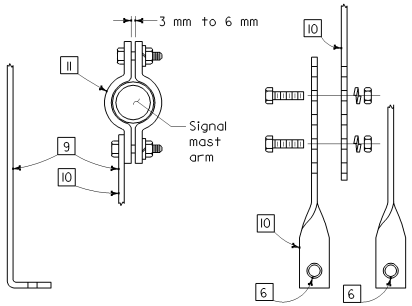

MOUNTING BRACKETS

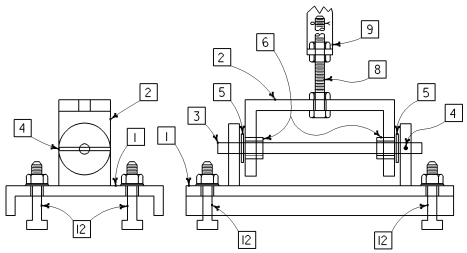

SIDE VIEW FRONT VIEW

TYPE 1 OPTION

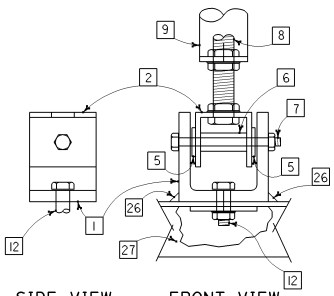

SIDE VIEW FRONT VIEW

TYPE 2 OPTION

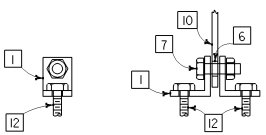

SIDE VIEW FRONT VIEW

TYPE 3 OPTION

MOUNTING ASSEMBLY OPTIONS

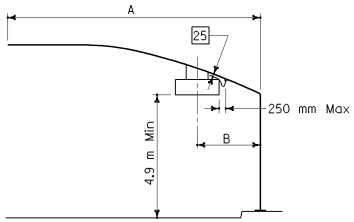

SIGN PLACEMENT

SIGN PLACEMENT

A	B	
m	1.8-m sign	2.4-m sign
6.1	2.4 m	2.7 m
7.6	2.8 m	3.1 m
9.1	2.9 m	3.2 m
10.7	3.2 m	3.5 m
12.2	3.8 m	4.1 m
13.7	3.8 m	4.1 m
15.2	3.8 m	4.1 m
16.8	3.8 m	4.1 m
18.2	3.8 m	4.1 m
19.8	3.8 m	4.1 m

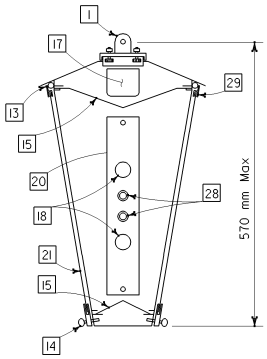

SECTION A-A

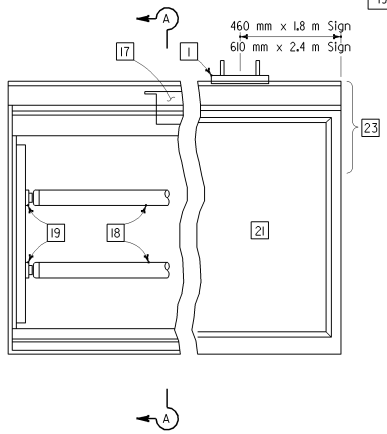

TYPE A SIGN

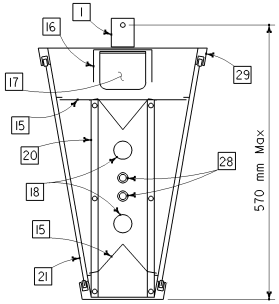

SECTION B-B

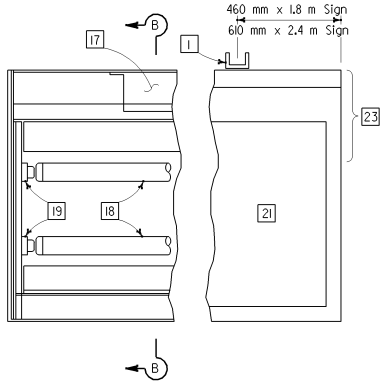

TYPE B SIGN

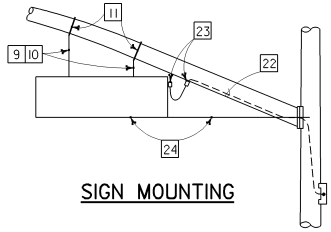

SIGN MOUNTING

NOTES

1. Lower mounting assembly, with gasket.
2. Upper mounting assembly.
3. Rod, 13 mm ø, stainless steel.
4. Locking pin, steel.
5. Flat washer, stainless steel.
6. Bushing, bronze.
7. Bolt, 6 mm ø stainless steel, with self-locking nut.
8. Bolt, 13 mm ø stainless steel, with three nuts, and cotter key. Length as required for proper mounting of sign.
9. Bracket, 6 mm x 40 mm minimum, length variable.
10. Bracket, 2-piece adjustable. 6 mm x 40 mm minimum. Two 13 mm ø hexagon head bolts with nuts and lockwashers.
11. Clamp, 2-piece, shaped to fit mast arm. 6 mm x 40 mm minimum. Two 13 mm ø hexagon head bolts with nuts and lockwashers.
12. Mounting bolt, 6 mm ø minimum, with nut and lockwasher, or self-locking nut and cotter key.
13. Continuous hinge.
14. Thumb screw, 16 mm ø, minimum two per side on 1220 mm centers.
15. Reflector, 1 mm minimum thickness.
16. Aluminum stiffener.
17. Fluorescent ballast (2 required).
18. Lamp, F72T12CW for 1.8 m sign; F96T12CW for 2.4 m sign
19. Lamp holder.
20. Lamp holder turret.
21. Sign panel, 380 mm minimum height. Message is shown elsewhere.
22. Cord, 16/3 type SJT. Continuous from sign terminal block to signal head mounting terminal compartment. form a 300 mm drip loop between sign and mast arm.
23. Cord connector. 90° angle at sign. Locate in upper 1/3 of sign. Straight at mast arm. Drill and tap bottom of mast arm.
24. Adjust fixture level no lower than center of signal arm connection.
25. Approximate clearance, 25 mm.
26. 6 mm Fillet weld, 32 mm long.
27. Sign frame.
28. Fuse holder and fuse.
29. Close cell neoprene gasket (continuous).

Caltrans Metric

DIST	COUNTY	ROUTE	KILOMETER POST TOTAL PROJECT	SHEET NO.	TOTAL SHEETS

REGISTERED CIVIL ENGINEER

July 1, 2004
PLANS APPROVAL DATE

REGISTERED PROFESSIONAL ENGINEER Tillat Sattar No. C42892 Exp. 03-31-2006 CIVIL STATE OF CALIFORNIA

The State of California or its officers or agents shall not be responsible for the accuracy or completeness of electronic copies of this plan sheet.

To get to the Caltrans web site, go to: http://www.dot.ca.gov

STATE OF CALIFORNIA
DEPARTMENT OF TRANSPORTATION

ELECTRICAL SYSTEMS (INTERNALLY ILLUMINATED STREET NAME SIGN)

NO SCALE

ALL DIMENSIONS ARE IN MILLIMETERS UNLESS OTHERWISE SHOWN

ES-70

07-09-04

Back to Table of Contents

DIST	COUNTY	ROUTE	KILOMETER POST TOTAL PROJECT	SHEET NO.	TOTAL SHEETS

REGISTERED ~~CIVIL~~ ENGINEER

July 1, 2004
PLANS APPROVAL DATE

REGISTERED PROFESSIONAL ENGINEER Iliat Sattar NO. C42892 Exp. 03-31-2006 CIVIL STATE OF CALIFORNIA

The State of California or its officers or agents shall not be responsible for the accuracy or completeness of electronic copies of this plan sheet.

To get to the Caltrans web site, go to: http://www.dot.ca.gov

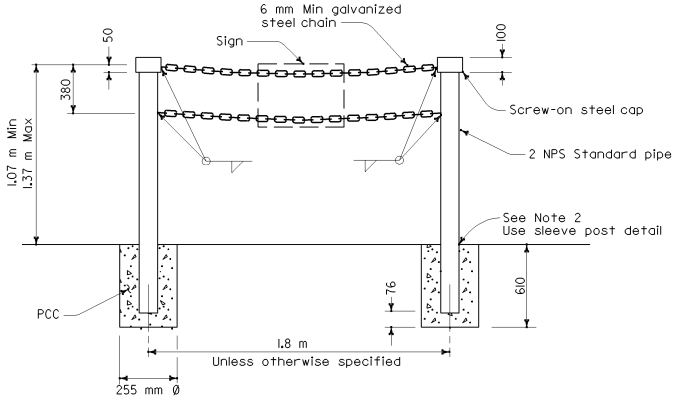

TYPE II

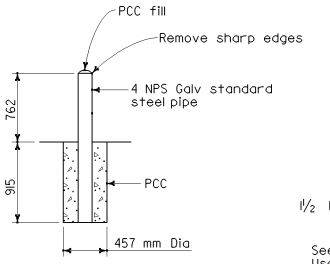

GUARD POST

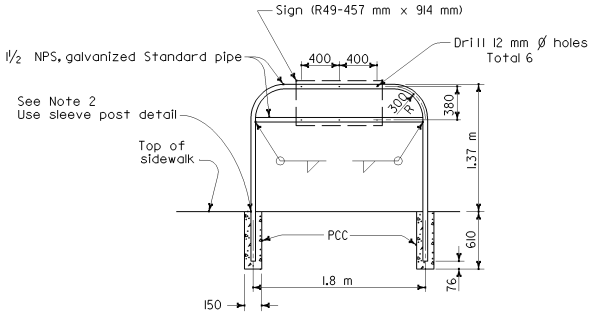

TYPE I

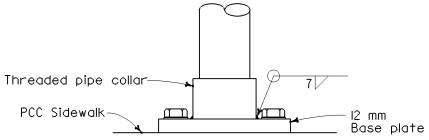

ELEVATION

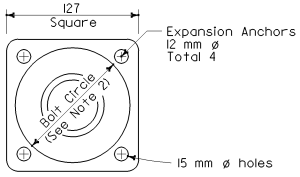

PLAN

POST ANCHORAGE DETAIL

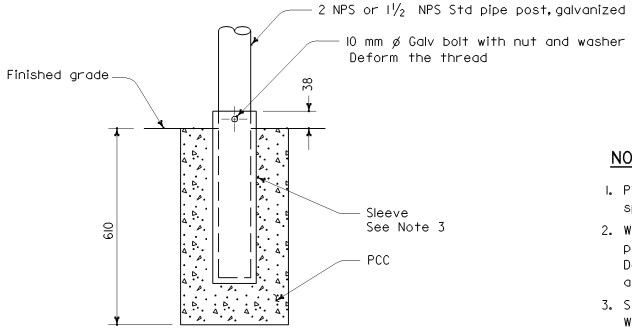

SLEEVE POST DETAIL

Use unless otherwise specified or shown on plans

NOTES

1. Pipe post to be set 460 mm back from face of curb unless otherwise specified.
2. Where barricade posts are installed in existing concrete sidewalk, the post may be anchored to the sidewalk as shown in the "Post Anchorage Detail". Bolt circle diameter shall be 102 mm minimum for Type I barricade and 127 mm minimum for Type II barricade.
3. Steel sleeve to be constructed with a diameter 2.5 mm larger than post. Wall thickness of sleeve to be same as post or larger.
4. Contractor may submit alternative details for approval by the Engineer.
5. For minimum pipe diameters and wall thickness refer to ASTM A6M.

STATE OF CALIFORNIA
DEPARTMENT OF TRANSPORTATION

ELECTRICAL SYSTEMS (PEDESTRIAN BARRICADES)

NO SCALE

ALL DIMENSIONS ARE IN MILLIMETERS UNLESS OTHERWISE SHOWN

ES-7P

07-08-04

Back to Table of Contents

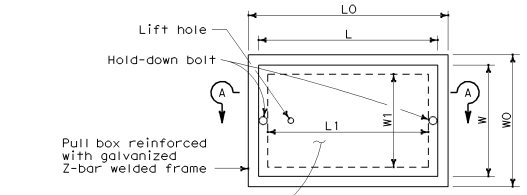

TOP VIEW

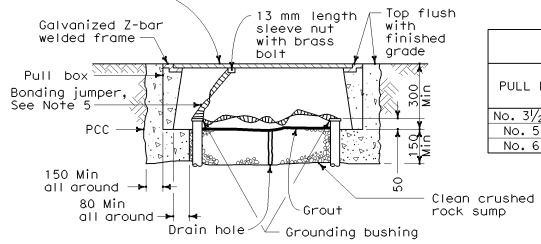

SECTION A-A

No. 3½(T), No. 5(T) AND No. 6(T) TRAFFIC PULL BOX

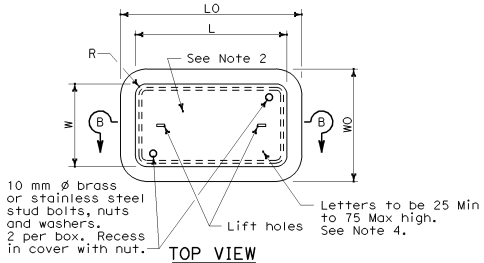

TOP VIEW

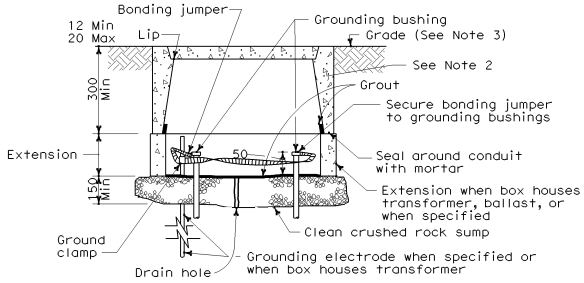

SECTION B-B

INSTALLATION DETAILS

Caltrans Metric

DIST	COUNTY	ROUTE	KILOMETER POST TOTAL PROJECT	SHEET NO.	TOTAL SHEETS

REGISTERED ELECTRICAL ENGINEER

July 1, 2004
PLANS APPROVAL DATE

REGISTERED PROFESSIONAL ENGINEER Martha V. Styer No. E13738 Exp. 6-30-07 ELECTRICAL STATE OF CALIFORNIA

The State of California or its officers or agents shall not be responsible for the accuracy or completeness of electronic copies of this plan sheet.

To get to the Caltrans web site, go to: http://www.dot.ca.gov

DIMENSION TABLE

PULL BOX	CONCRETE BOX				NON-PCC BOX		CONCRETE OR NON-PCC COVERS				
	Minimum * Thickness	Minimum Depth Box and Extension	W0 (mm)	L0 (mm)	Minimum ** Thickness	Minimum Depth Box and Extension	L ** (mm)	W ** (mm)	R (mm)	Edge Thickness	Edge Taper
No. 3½	25 mm	No Extension	260	510	8 mm	No Extension	390	260	30	45 mm	3 mm
No. 5	25 mm	560 mm	460	710	8 mm	510 mm	590	350	32	50 mm	3 mm
No. 6	40 mm	600 mm	580	910	10 mm	510 mm	780	450	32	50 mm	3 mm

* Excluding conduit web ** Top dimension

DIMENSION TABLE

PULL BOX	CONCRETE BOX						NON-PCC BOX		CONCRETE OR NON-PCC COVERS				
	Minimum * Thickness	Minimum Depth Box and Extension	W0 (mm)	L0 (mm)	W1 (mm)	L1 (mm)	Minimum ** Thickness	Minimum Depth Box and Extension	L ** (mm)	W ** (mm)	R (mm)	Edge Thickness	Edge Taper
No. 3½(T)	40 mm	300 mm	430 ± 25	530 ±	370 ±	270 ± 25	Does Not Apply		510 ±	350 ±	0	13 mm	None
No. 5(T)	45 mm	300 mm	600 ± 25	750 ±	480 ±	330 ± 25	Does Not Apply		690 ±	410 ±	0	13 mm	None
No. 6(T)	50 mm	300 mm	760 ± 25	900 ±	600 ±	430 ± 25	Does Not Apply		840 ±	510 ±	0	13 mm	None

* Excluding conduit web ** Top dimension

NOTES ON PULL BOXES

1. Traffic pull box shall be provided with steel cover and special concrete footing. Steel cover shall have embossed non-skid pattern.

2. Steel reinforcing shall be as regularly used in the standard products of the respective manufacturer.

3. Top of pull boxes shall be flush with surrounding grade or top of adjacent curb, except that in unpaved areas where pull box is not immediately adjacent to and protected by a concrete foundation, pole or other protective construction, the box shall be placed with its top 30 mm above surrounding grade. Where practicable, pull boxes shown in the vicinity of curbs shall be placed adjacent to the back of curb, and pull boxes shown adjacent to standards shall be placed on side of foundation facing away from traffic, unless otherwise noted. When pull box is installed in sidewalk area, the depth of the pull box shall be adjusted so that the top of the pull box is flush with the sidewalk.

4. Pull box covers shall be marked as follows: "SERVICE" Service circuits between service point and service disconnect; "SPRINKLER-CONTROL" Sprinkler control circuits, 50 V or less; "CALTRANS" On all pull boxes, except pull boxes marked "SPRINKLER-CONTROL"; and "TELEPHONE" Telephone service.

   a) No. 3½ pull box.

      1) "SIGNAL" Traffic signal circuits with or without street or sign lighting circuits.

      2) "ST LIGHTING" Street or sign lighting circuits where voltage is under 600 V.

   b) No. 5, 6, 9 or 9A pull box.

      1) "TRAFFIC SIGNAL" Traffic signal circuits with or without street or sign lighting circuits.

      2) "STREET LIGHTING" Street or sign lighting circuits where voltage is under 600 V.

      3) "STREET LIGHTING-HIGH VOLTAGE" Street or sign lighting circuits where voltage is above 600 V.

      4) "IRRIGATION" Circuits to irrigation controller 120 V or more.

      5) "RAMP METER" Ramp meter circuits.

      6) "COUNT STATION" Count or speed monitor circuits.

      7) "COMMUNICATION" Communication circuits.

      8) "TOS COMMUNICATIONS" TOS communications line

      9) "TOS POWER" TOS power.

      10) "TDC POWER" Telephone demarcation cabinet power.

      11) "CCTV" Closed circuit television circuits.

      12) "TMS" Traffic monitoring station circuits.

      13) "CMS" Changeable message sign circuits.

      14) "HAR" Highway advisory radio circuits.

5. Bonding jumper for metal covers shall be 1 m long, minimum.

6. The nominal dimensions of the opening in which the cover sets shall be the same as the cover dimensions except the length and width dimensions shall be 3 mm greater.

7. Covers and boxes shall be interchangeable with California standard male and female gages. When interchanged with a standard male or female gage, the top surfaces shall be flush within 3 mm. Top outside edge of concrete covers and pull boxes shall have a 6 mm minimum radius.

8. Pull box shall not be installed within the boundaries of new or existing curb ramps.

9. Pull boxes for electroliers, post and signal standards shall be located ± 1.5 m from the station of the adjacent electrolier, post or signal standard. Pull boxes shall be placed adjacent to back of curb or edge of shoulder except where this is impractical, a box may be placed in another suitable protected and accessible location.

STATE OF CALIFORNIA
DEPARTMENT OF TRANSPORTATION

ELECTRICAL SYSTEMS (PULL BOX DETAILS)

NO SCALE

ALL DIMENSIONS ARE IN MILLIMETERS UNLESS OTHERWISE SHOWN

ES-8

07-28-04

Back to Table of Contents

DIST	COUNTY	ROUTE	KILOMETER POST TOTAL PROJECT	SHEET NO.	TOTAL SHEETS

Caltrans Metric

REGISTERED ELECTRICAL ENGINEER

July 1, 2004
PLANS APPROVAL DATE

REGISTERED PROFESSIONAL ENGINEER
Martha V. Styer
No. E13738
Exp. 6-30-07
ELECTRICAL
STATE OF CALIFORNIA

The State of California or its officers or agents shall not be responsible for the accuracy or completeness of electronic copies of this plan sheet.

To get to the Caltrans web site, go to: http://www.dot.ca.gov

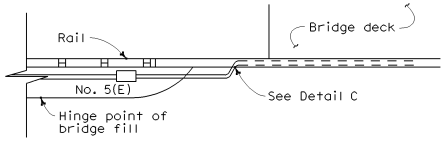

TOP VIEW

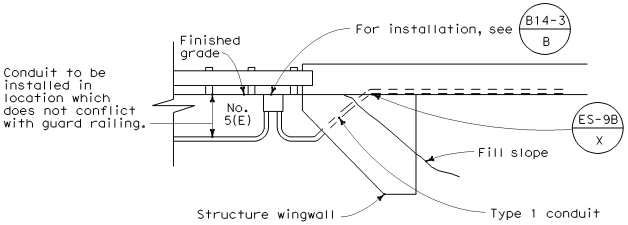

SIDE VIEW
DETAIL I
CONDUIT TERMINATION

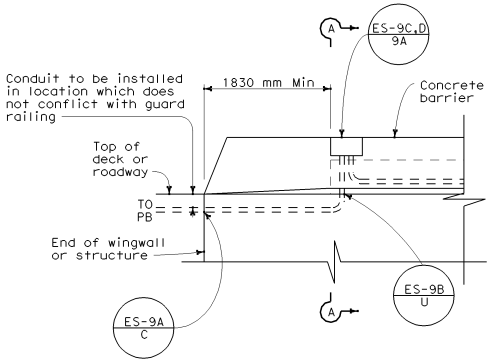

SIDEVIEW

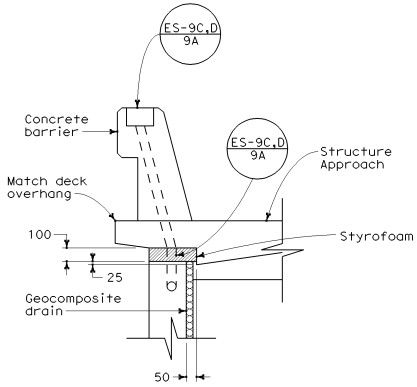

SECTION A-A

DETAIL A
CONDUIT TERMINATION

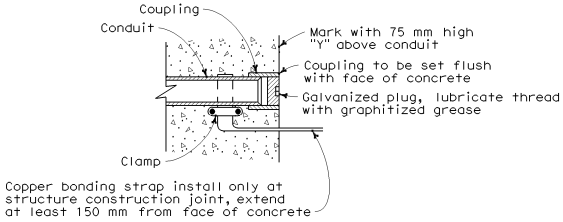

DETAIL C
CONDUIT TERMINATION

STATE OF CALIFORNIA
DEPARTMENT OF TRANSPORTATION

ELECTRICAL SYSTEMS (ELECTRICAL DETAILS STRUCTURE INSTALLATIONS)

NO SCALE

ALL DIMENSIONS ARE IN MILLIMETERS UNLESS OTHERWISE SHOWN

ES-9A

07-28-04

2004 Std PLAN ES-9A

Back to Table of Contents

DIST	COUNTY	ROUTE	KILOMETER POST TOTAL PROJECT	SHEET NO.	TOTAL SHEETS

Caltrans Metric

REGISTERED ELECTRICAL ENGINEER

July 1, 2004
PLANS APPROVAL DATE

REGISTERED PROFESSIONAL ENGINEER Martha V. Styer No. E13738 Exp. 6-30-07 ELECTRICAL STATE OF CALIFORNIA

The State of California or its officers or agents shall not be responsible for the accuracy or completeness of electronic copies of this plan sheet.

To get to the Caltrans web site, go to: http://www.dot.ca.gov

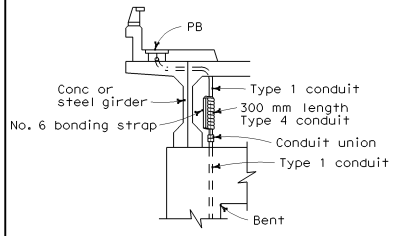

DETAIL R
CONDUIT RISER CONNECTION

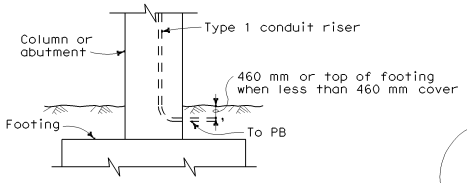

DETAIL T
LOWER END OF CONDUIT RISER AT COLUMN OR ABUTMENT

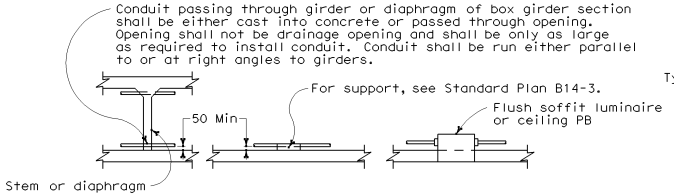

DETAIL S
CONDUIT INSTALLATION WITHIN BOX GIRDER SECTIONS

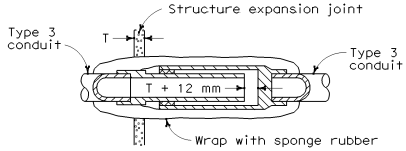

NON-METALLIC CONDUIT INSTALLATION
(To be used only when shown or specified on Project Plans)

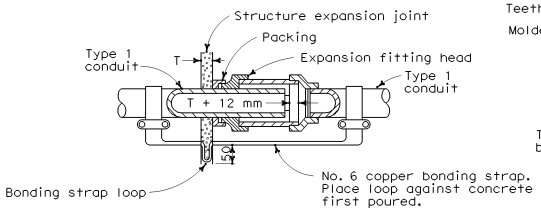

METALLIC CONDUIT INSTALLATION

DETAIL X
CONDUIT EXPANSION FITTINGS

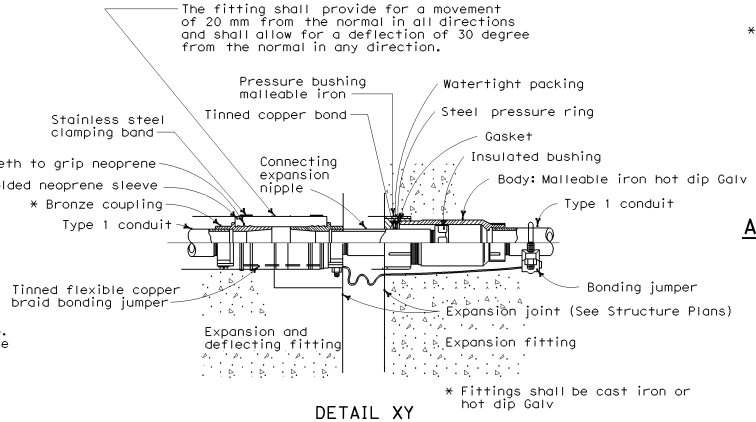

DETAIL XY
COMBINATION EXPANSION-DEFLECTION FITTINGS

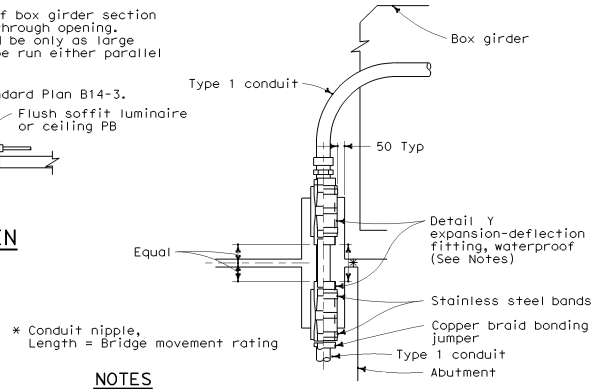

NOTES

1. Fitting and pocket required only where movement can occur between girder and abutment.
2. Fill pocket around fitting with resilient waterproof compound.

DETAIL U
CONDUIT RISER CONNECTION AT COLUMN, ABUTMENT OR STRUCTURE WING WALL

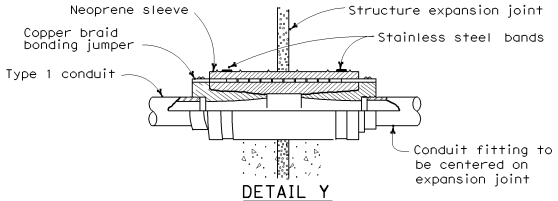

DETAIL Y
CONDUIT EXPANSION-DEFLECTION FITTING

NOTES

1. Except for sidewalk joints, a conduit expansion fitting or expansion-deflection fitting shall be installed at each 12 mm or greater structure joint, hinge or abutment.
2. Fittings or combination of fittings shall be installed to accommodate the movement rating as shown on the structure plans.
3. Fittings shall be installed parallel to superstructure girders.
4. Where lateral movement greater than 6 mm may occur, a neoprene sleeve expansion-deflection fitting shall be installed straddling the joint.
5. The external bond strap may be omitted when the fitting is provided with an internal bond equivalent to a No. 6 copper bond in Type 1 conduit or the No. 8 equipment grounding conductor in Type 3 conduit.

STATE OF CALIFORNIA
DEPARTMENT OF TRANSPORTATION

ELECTRICAL SYSTEMS (ELECTRICAL DETAILS STRUCTURE INSTALLATIONS)

NO SCALE

ALL DIMENSIONS ARE IN MILLIMETERS UNLESS OTHERWISE SHOWN

ES-9B

07-28-04

Back to Table of Contents

DIST	COUNTY	ROUTE	KILOMETER POST TOTAL PROJECT	SHEET NO.	TOTAL SHEETS

Caltrans Metric

REGISTERED ELECTRICAL ENGINEER

July 1, 2004
PLANS APPROVAL DATE

REGISTERED PROFESSIONAL ENGINEER Martha V. Styer No. E13738 Exp. 6-30-07 ELECTRICAL STATE OF CALIFORNIA

The State of California or its officers or agents shall not be responsible for the accuracy or completeness of electronic copies of this plan sheet.

To get to the Caltrans web site, go to: http://www.dot.ca.gov

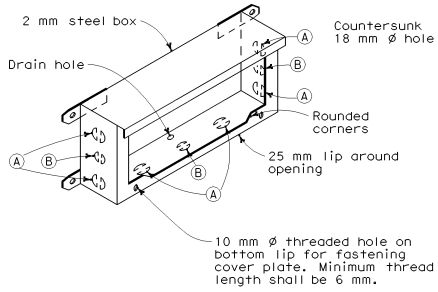

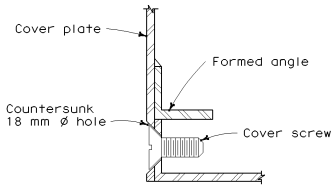

DETAIL J

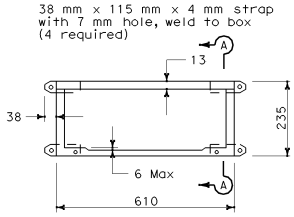

PLAN

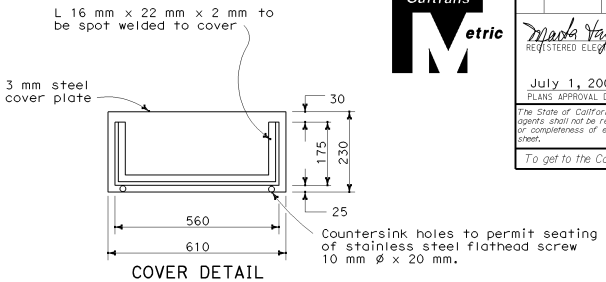

COVER DETAIL

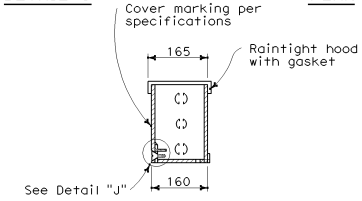

SECTION A-A

INSTALLATION NOTE

Box axis shall be parallel to top of railing. Close cover box during pouring with 6 mm plywood of sufficient size to provide 1:1 chamfer on 3 sides of cover. Upper edge of plywood shall fit against lower edge of raintight hood.

No. 9 STRUCTURE PULL BOX

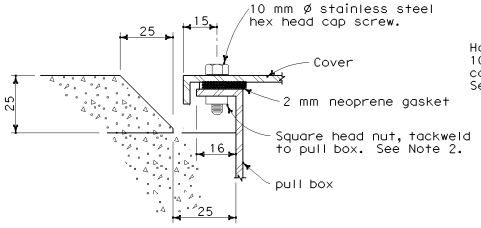

SECTION C-C

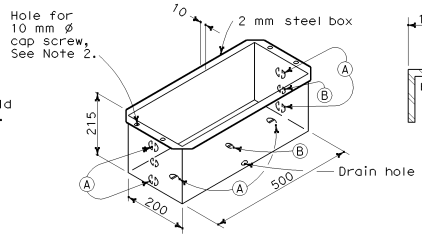

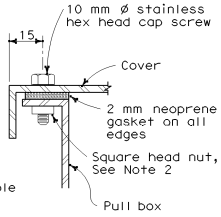

DETAIL A

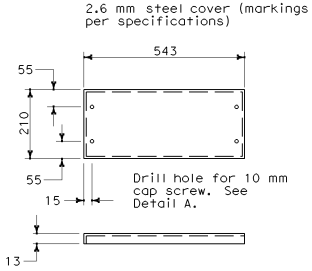

COVER DETAIL

NOTES: No. 9 and 9A Pull Box

1. Corner joints shall be lapped and secured by spot welding or riveting.
2. Where cap screws are used to attach cover to box, either of the following methods of providing adequate threading may be used:
   a. Tack weld square nut to bottom of flange (Total 4), or
   b. Tack weld a 6 mm x 16 mm x 200 mm bar beneath flange (Total 2).
3. Pound knockouts flat after punching.
4. Multiple size knockouts shall not be permitted.
5. Pull box covers shall be marked as shown on Standard Plan ES-8.

No. 9A STRUCTURE PULL BOX

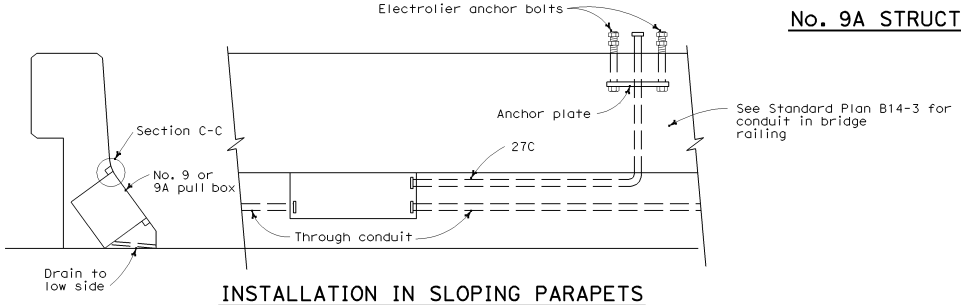

INSTALLATION IN SLOPING PARAPETS

For reinforcement in area of electrolier, see railing sheets. For electrolier anchor bolts, see Standard Plan ES-6B.

KNOCKOUT SCHEDULE
No. 9 AND 9A PULL BOX

(A) 41C, 2 each end, 2 on bottom.

(B) 27C, 1 each end, 1 on bottom.

STATE OF CALIFORNIA
DEPARTMENT OF TRANSPORTATION

ELECTRICAL SYSTEMS (ELECTRICAL DETAILS STRUCTURE INSTALLATIONS)

NO SCALE

ALL DIMENSIONS ARE IN MILLIMETERS UNLESS OTHERWISE SHOWN

ES-9C

07-16-04

Back to Table of Contents

DIST	COUNTY	ROUTE	KILOMETER POST TOTAL PROJECT	SHEET NO.	TOTAL SHEETS

Caltrans Metric

REGISTERED ELECTRICAL ENGINEER

July 1, 2004
PLANS APPROVAL DATE

REGISTERED PROFESSIONAL ENGINEER Martha V. Styer No. E13738 Exp. 6-30-07 ELECTRICAL STATE OF CALIFORNIA

The State of California or its officers or agents shall not be responsible for the accuracy or completeness of electronic copies of this plan sheet.

To get to the Caltrans web site, go to: http://www.dot.ca.gov

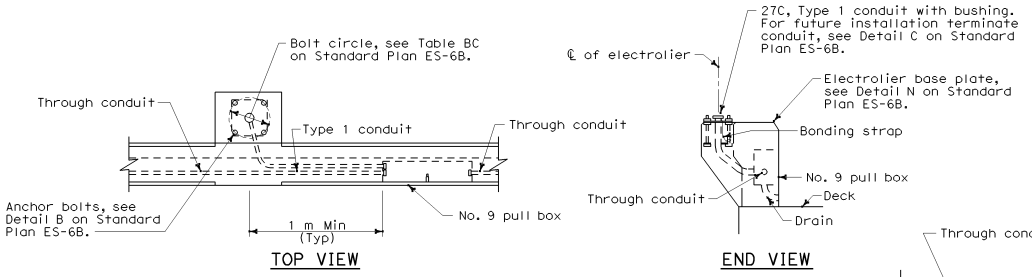

TOP VIEW END VIEW

No. 9 PULL BOX INSTALLATION

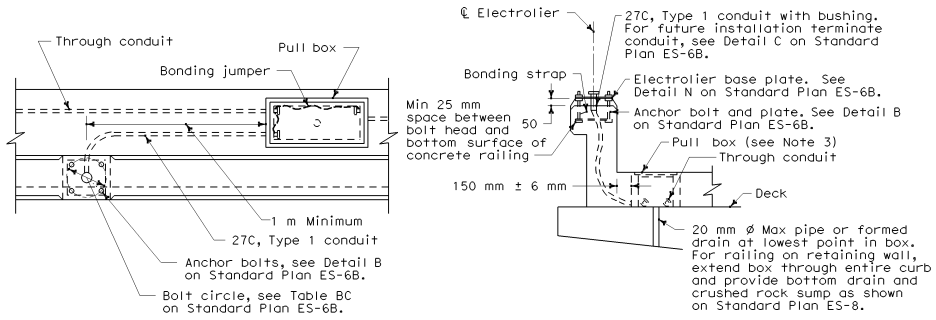

TOP VIEW END VIEW

No. 3½, 5 OR 6 PULL BOX INSTALLATION

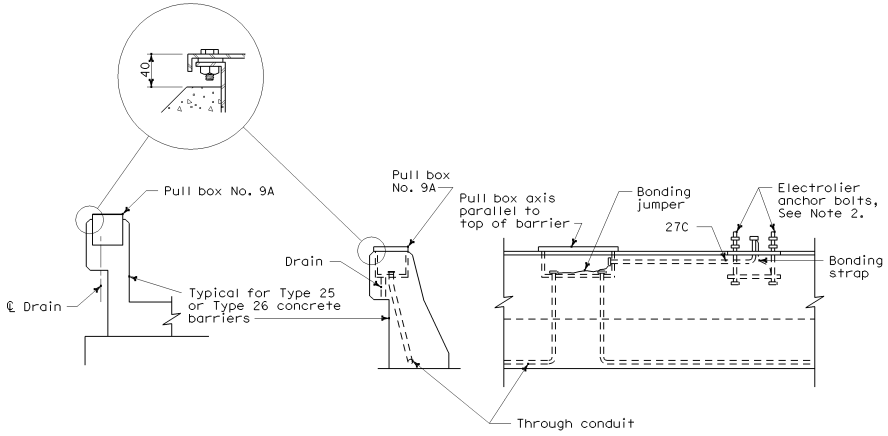

END VIEW SIDE VIEW

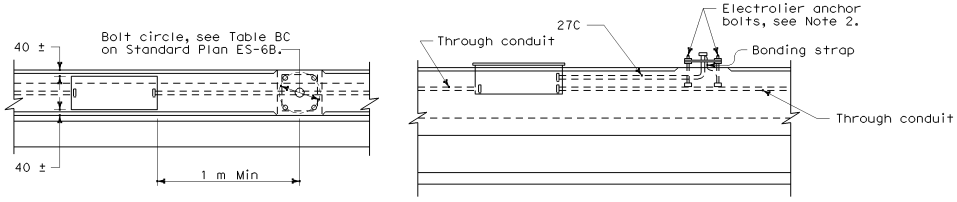

TOP VIEW SIDE VIEW

No. 9A PULL BOX INSTALLATION

NOTES

1. Axis of pull box shall be parallel to top of barrier, sidewalk or railing.
2. See railing sheet for reinforcement and structural details at electroliers and pull boxes.
3. Top of pull boxes in sidewalk areas shall be flush with sidewalk. Modify base of pull box as required.
4. Boxes inside of vertical barrier or railing shall be closed during pouring of PCC with 6 mm plywood of sufficient size to provide 1:1 chamfer on 3 sides of cover. Upper edge of plywood shall fit against lower edge of raintight hood.
5. Use drain in center if box is horizontal, or at low end if box is inclined. When box is mounted in sloping parapet 12 mm elongated drain hole inside at center or near end as required for drainage.
6. For electrolier anchor bolts, see Standard Plan ES-6B.
7. See Standard Plan B14-3 for conduit bridge railing.

STATE OF CALIFORNIA
DEPARTMENT OF TRANSPORTATION

ELECTRICAL SYSTEMS (ELECTRICAL DETAILS STRUCTURE INSTALLATIONS)

NO SCALE

ALL DIMENSIONS ARE IN MILLIMETERS UNLESS OTHERWISE SHOWN

ES-9D

07-28-04

Back to Table of Contents

DIST	COUNTY	ROUTE	KILOMETER POST TOTAL PROJECT	SHEET NO.	TOTAL SHEETS

REGISTERED ELECTRICAL ENGINEER

July 1, 2004
PLANS APPROVAL DATE

REGISTERED PROFESSIONAL ENGINEER Martha V. Styer No. E13738 Exp. 6-30-07 ELECTRICAL STATE OF CALIFORNIA

The State of California or its officers or agents shall not be responsible for the accuracy or completeness of electronic copies of this plan sheet.

To get to the Caltrans web site, go to: http://www.dot.ca.gov

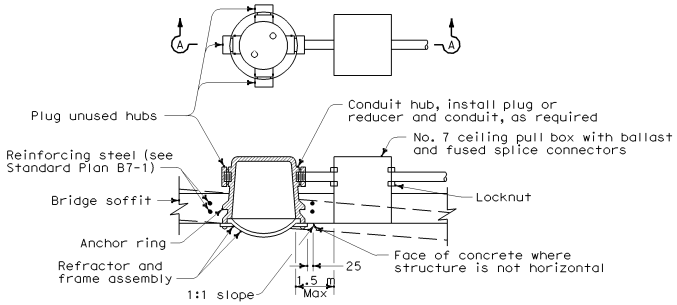

SECTION A-A

NOTES

1. Place 6 mm plywood disk in body opening during pouring.
2. Install luminaire with axis vertical and "street side" of refractor oriented as indicated on lighting layout.
3. Luminaire shall be located so as to provide minimum clearance of 600 mm from inside surface of girders and 300 mm from near face of diaphragm.
4. Bridge soffit and ceiling pull box should be installed over same lane.

DETAIL F

FLUSH SOFFIT LUMINAIRE INSTALLATION

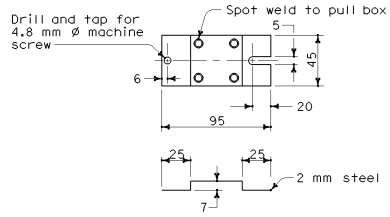

TERMINAL BLOCK MOUNTING BRACKET

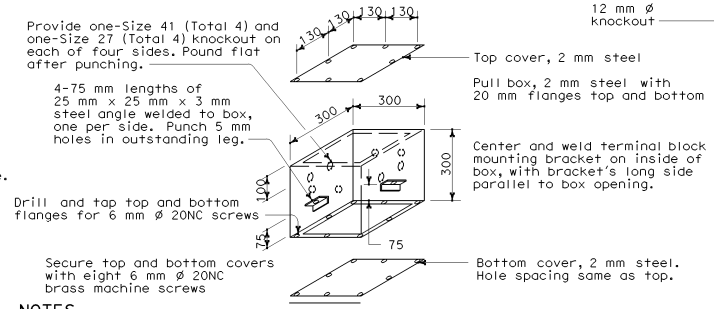

NOTES

1. Install with bottom flange flush with concrete.
2. Both covers shall be on a box during pouring.

NO. 7 CEILING PULL BOX

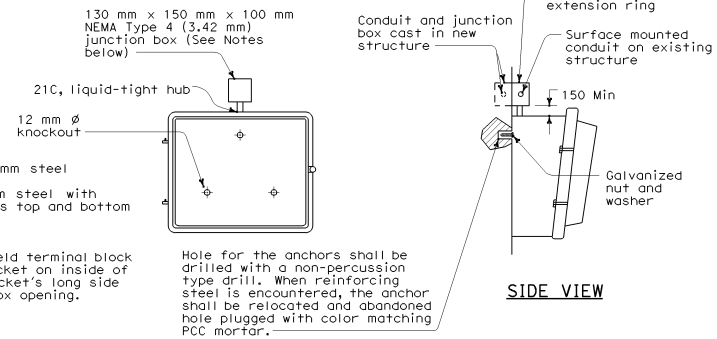

SIDE VIEW

NOTES

1. For existing structures, provide external mounting taps (Total 4).
2. For new structures, provide extension ring.

DETAIL W

WALL LUMINAIRE INSTALLATION

(Typical)

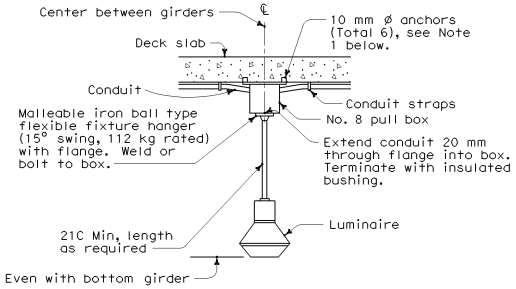

NOTES

1. Cast-in-place inserts or expansion anchor.
2. For future installation, omit suspension conduit and luminaire, close flange with galvanized plug.
3. If conduit smaller than the knockout size is used, it shall be bonded to the box.

DETAIL P

PENDANT SOFFIT LUMINAIRE INSTALLATION

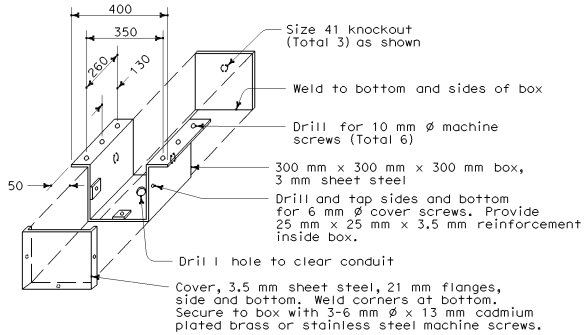

NO. 8 PULL BOX

STATE OF CALIFORNIA
DEPARTMENT OF TRANSPORTATION

ELECTRICAL SYSTEMS (ELECTRICAL DETAILS STRUCTURE INSTALLATIONS)

NO SCALE

ALL DIMENSIONS ARE IN MILLIMETERS UNLESS OTHERWISE SHOWN

ES-9E

07-19-04

Back to Table of Contents

DIST	COUNTY	ROUTE	KILOMETER POST TOTAL PROJECT	SHEET NO.	TOTAL SHEETS

REGISTERED ELECTRICAL ENGINEER

July 1, 2004
PLANS APPROVAL DATE

REGISTERED PROFESSIONAL ENGINEER Martha V. Styer No. E13738 Exp. 6-30-07 ELECTRICAL STATE OF CALIFORNIA

The State of California or its officers or agents shall not be responsible for the accuracy or completeness of electronic copies of this plan sheet.

To get to the Caltrans web site, go to: http://www.dot.ca.gov

Caltrans Metric

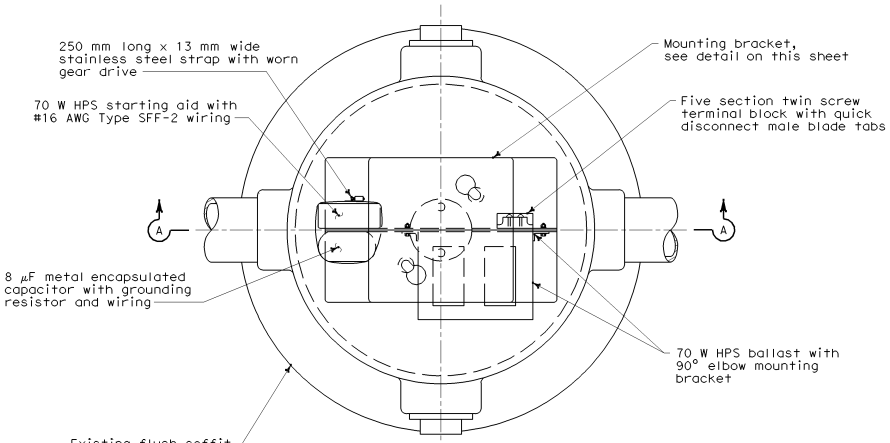

PLAN

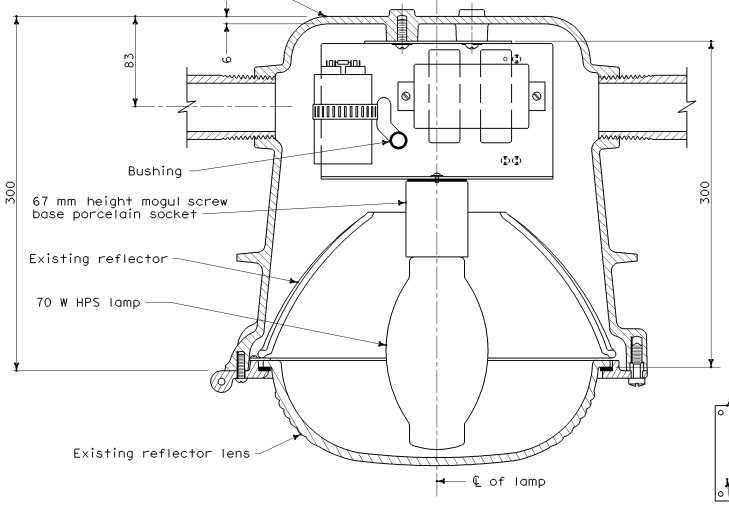

SECTION A-A

FLUSH SOFFIT LUMINAIRE ASSEMBLY

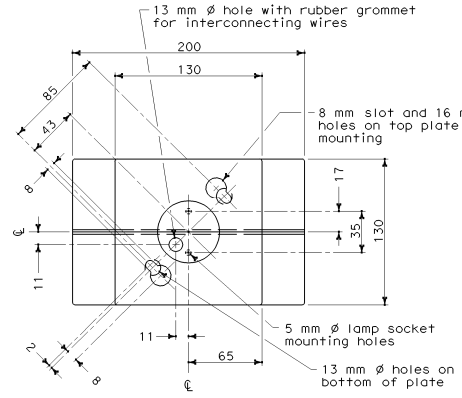

TOP VIEW

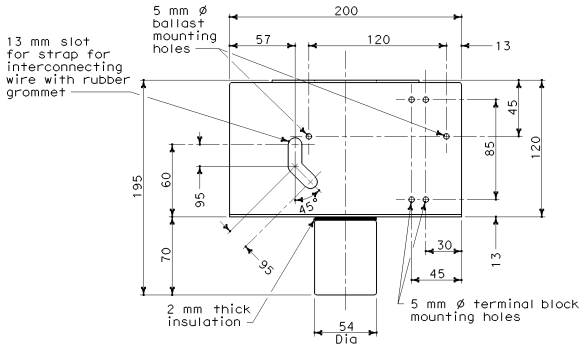

FRONT VIEW

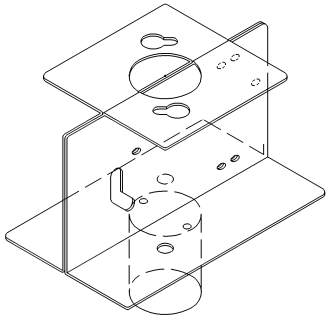

Preform two sheets 1.6 mm mild steel as shown, spotweld together in each corner with four spotwelds.

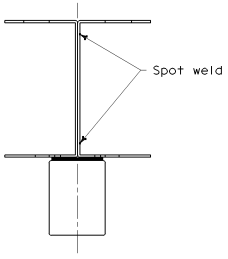

SIDE VIEW

MOUNTING BRACKET DETAILS

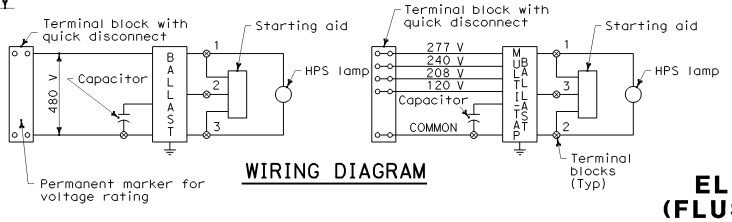

WIRING DIAGRAM

NOTES

1. Fixture wiring shall be Type SFF-2.
2. Use 4.2 mm ø machine screws, lockwashers and nuts for mounting ballast and terminal strips.
3. In-line fuse as required on Standard Plan ES-13B.

STATE OF CALIFORNIA
DEPARTMENT OF TRANSPORTATION

ELECTRICAL SYSTEMS (FLUSH SOFFIT LUMINAIRE MODIFICATION DETAILS STRUCTURE INSTALLATIONS)

NO SCALE

ALL DIMENSIONS ARE IN MILLIMETERS UNLESS OTHERWISE SHOWN

ES-9F

05-24-04

Back to Table of Contents

DIST	COUNTY	ROUTE	KILOMETER POST TOTAL PROJECT	SHEET NO.	TOTAL SHEETS

REGISTERED ELECTRICAL ENGINEER

July 1, 2004
PLANS APPROVAL DATE

REGISTERED PROFESSIONAL ENGINEER Martha V. Styer No. E13738 Exp. 6-30-07 ELECTRICAL STATE OF CALIFORNIA

The State of California or its officers or agents shall not be responsible for the accuracy or completeness of electronic copies of this plan sheet.

To get to the Caltrans web site, go to: http://www.dot.ca.gov

Caltrans Metric

ISOLUX CURVE - MINIMUM

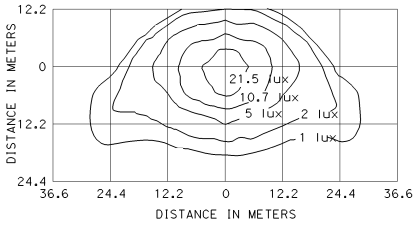

TYPE III MEDIUM CUTOFF

Cutoff Luminaire
9.1 m Mounting Height
LAMP OPERATED AT 22 000 lm
200 W HIGH PRESSURE SODIUM LAMP
ANSI DESIGNATION S66

ISOLUX CURVE - MINIMUM

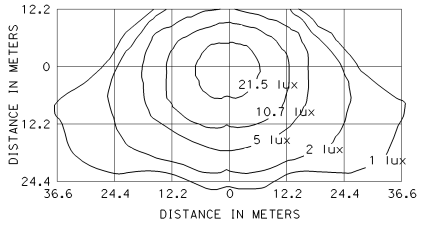

TYPE III MEDIUM CUTOFF

Cutoff Luminaire
12.2 m Mounting Height
LAMP OPERATED AT 37 000 lm
310 W HIGH PRESSURE SODIUM LAMP
ANSI DESIGNATION S67

ISOLUX CURVE - MINIMUM

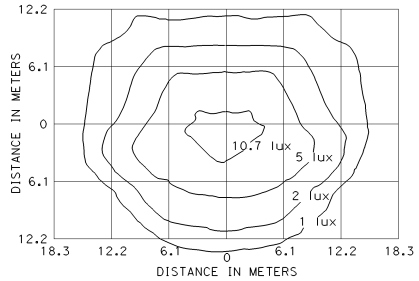

FLUSH SOFFIT LUMINAIRE

5.2 m Mounting Height
LAMP OPERATED AT 5800 lm
70 W HIGH PRESSURE SODIUM LAMP
ANSI DESIGNATION S62

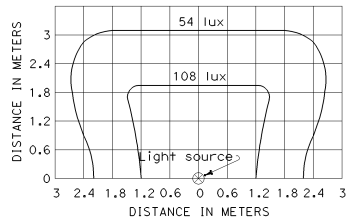

SIGN LIGHTING FIXTURE ISOLUX DIAGRAM

1. Curves represent the minimum lux of initial illumination on a 3 m x 6 m panel.
2. The lux shown are with the fixture attached to the light fixture mounting channel which places the center of the source 1420 mm in front of panel and 300 mm below the bottom edge.
3. Applicable lamp: 85-W fluorescent phosphor coated lamp rated at approximately 8150 lm.

ISOLUX CURVE - MINIMUM

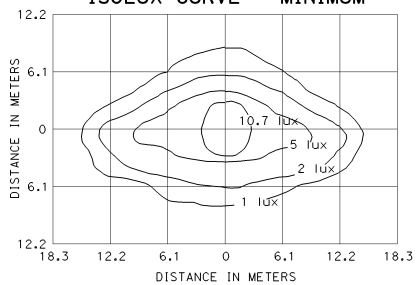

PENDANT SOFFIT LUMINAIRE
TYPE III SHORT

5.2 m Mounting Height
LAMP OPERATED AT 5800 lm
70 W HIGH PRESSURE SODIUM LAMP
ANSI DESIGNATION S62

ISOLUX CURVE - MINIMUM

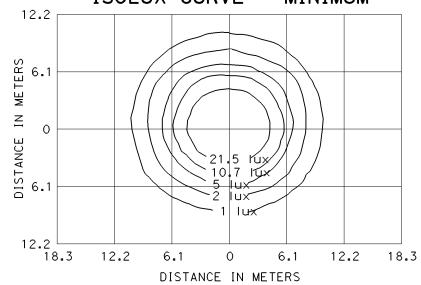

PENDANT SOFFIT LUMINAIRE

5.2 m Mounting Height
LAMP OPERATED AT 5800 lm
70 W HIGH PRESSURE SODIUM LAMP
ANSI DESIGNATION S62

ISOLUX CURVE - MINIMUM

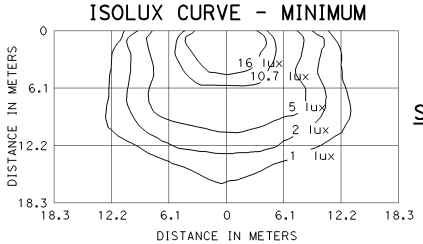

DETAIL ``W'' WALL LUMINAIRE

4.6 m Mounting Height
LAMP OPERATED AT 9500 lm
100 W HIGH PRESSURE SODIUM LAMP
ANSI DESIGNATION S54

NOTE

Isolux diagrams show the minimum horizontal lux required.

ISOLUX CURVE - MINIMUM

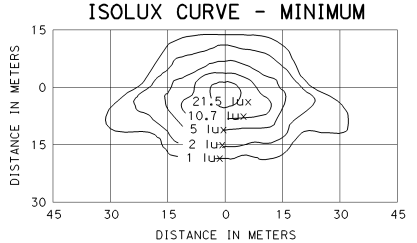

TYPE III MEDIUM CUTOFF

Cutoff Luminaire
9.1 m Mounting Height
LAMP OPERATED AT 16 000 lm
150 W HIGH PRESSURE SODIUM LAMP
ANSI DESIGNATION S55

ISOLUX CURVE - MINIMUM

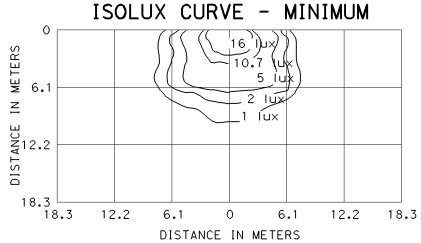

WALL LUMINAIRE

4.6 m Mounting Height
LAMP OPERATED AT 5800 lm
70 W HIGH PRESSURE SODIUM LAMP
ANSI DESIGNATION S62

ISOLUX CURVE - MINIMUM

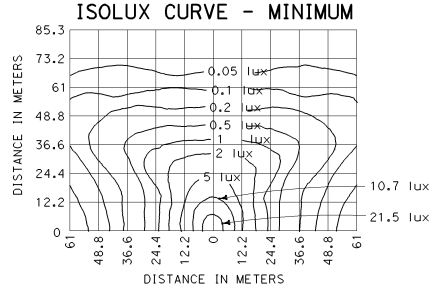

LOW PRESSURE SODIUM LUMINAIRE

12.2 m Mounting Height
LAMP OPERATED AT 33 000 lm
180 W LOW PRESSURE SODIUM LAMP

STATE OF CALIFORNIA
DEPARTMENT OF TRANSPORTATION

ELECTRICAL SYSTEMS (ISOLUX DIAGRAMS)

NO SCALE

ALL DIMENSIONS ARE IN MILLIMETERS UNLESS OTHERWISE SHOWN

ES-10

2004 Std PLAN ES-10

07-19-04

Back to Table of Contents

DIST	COUNTY	ROUTE	KILOMETER POST TOTAL PROJECT	SHEET NO.	TOTAL SHEETS

Caltrans Metric

REGISTERED CIVIL ENGINEER

July 1, 2004
PLANS APPROVAL DATE

REGISTERED PROFESSIONAL ENGINEER
Tillat Sattar
NO. C42892
Exp 03-31-2006
CIVIL
STATE OF CALIFORNIA

The State of California or its officers or agents shall not be responsible for the accuracy or completeness of electronic copies of this plan sheet.

To get to the Caltrans web site, go to: http://www.dot.ca.gov

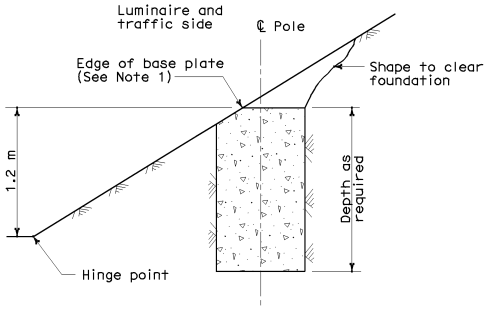

CUT SLOPES
STEEPER THAN 1:4
See Note 2

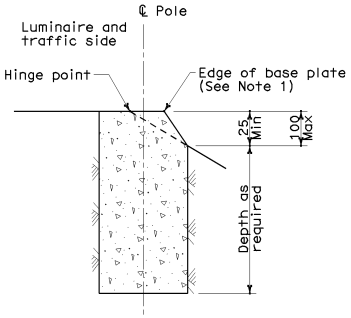

FILL SLOPES
STEEPER THAN 1:4
See Note 2

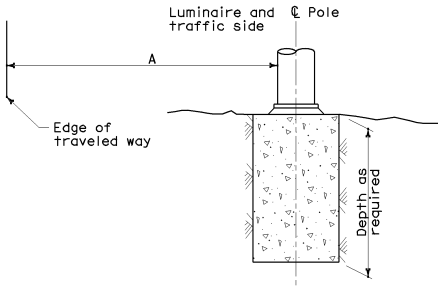

FLAT SECTIONS, CUT OR FILL SLOPES
1:4 OR FLATTER

STANDARD TYPE	SETBACK (DIMENSION A)
32	9 m Min
31, 36-20A	6 m Min
15, 15D, 15-SB, 30	Mast Arm Length (Min)

FOUNDATIONS ADJACENT TO ALL ROADWAYS EXCEPT IN SIDEWALK, MEDIAN AND ISLAND AREAS

NOTES

1. Where a portion of the foundation is above grade, the top edges shall have a 25 mm chamfer.
2. Horizontal setbacks on cut and fill slopes steeper than 1:4 shall not exceed the distance shown for flat sections.

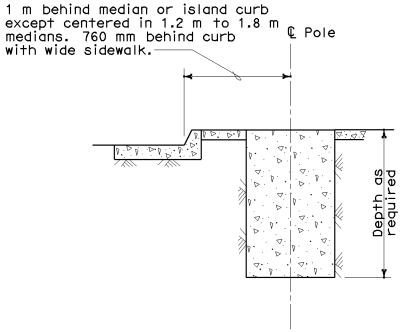

MEDIAN, ISLAND
OR WIDE SIDEWALK
(2 m wide and wider)

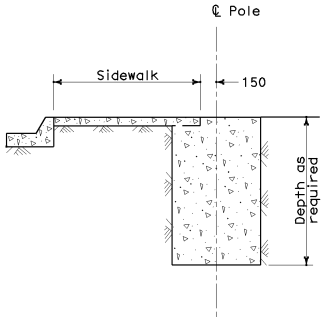

NARROW SIDEWALK
(Less than 2 m wide)

FOUNDATIONS IN SIDEWALK, MEDIAN AND ISLAND AREAS

STATE OF CALIFORNIA
DEPARTMENT OF TRANSPORTATION

ELECTRICAL SYSTEMS (FOUNDATION INSTALLATIONS)

NO SCALE

ALL DIMENSIONS ARE IN MILLIMETERS UNLESS OTHERWISE SHOWN

ES-11

07-28-04

2004 Std PLAN ES-11

Back to Table of Contents

NOTES

1. The maximum tolerance between door and lens shall be 0.4 mm. Casting dimensions of shell are nominal and are subject to such tolerances as are consistent with sound foundry practice.
2. Continuous grounding between fixtures and from fixture to end post carrying conductors shall be provided.

Caltrans Metric

DIST	COUNTY	ROUTE	KILOMETER POST TOTAL PROJECT	SHEET NO.	TOTAL SHEETS

REGISTERED ELECTRICAL ENGINEER

July 1, 2004
PLANS APPROVAL DATE

REGISTERED PROFESSIONAL ENGINEER Martha V. Styer No. E13738 Exp. 6-30-07 ELECTRICAL STATE OF CALIFORNIA

The State of California or its officers or agents shall not be responsible for the accuracy or completeness of electronic copies of this plan sheet.

To get to the Caltrans web site, go to: http://www.dot.ca.gov

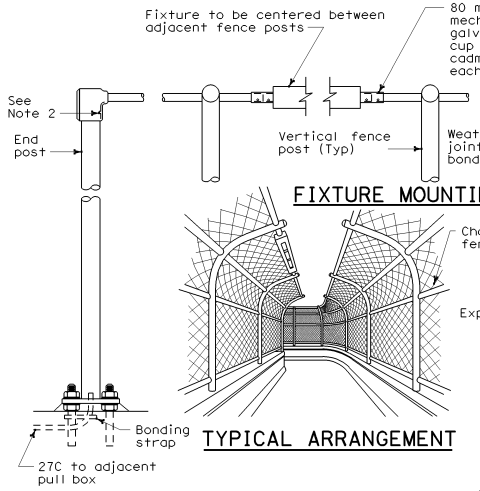

FIXTURE MOUNTING DETAIL

TYPICAL ARRANGEMENT

EXPANSION FITTING DETAIL
BOTTOM VIEW

END POST DETAIL

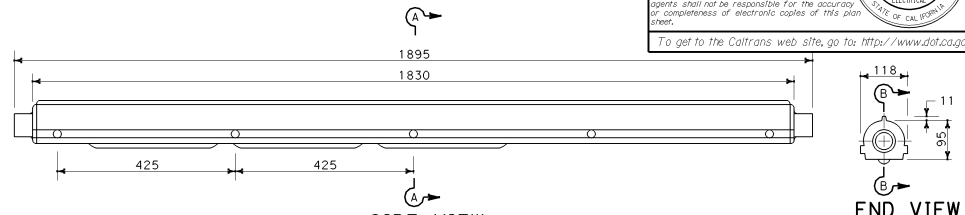

SIDE VIEW

END VIEW

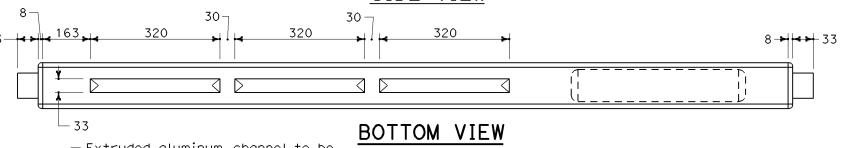

BOTTOM VIEW

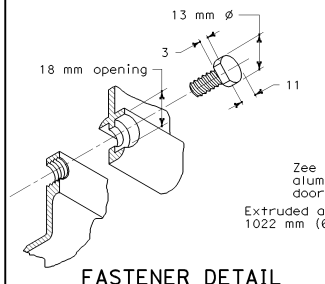

FASTENER DETAIL

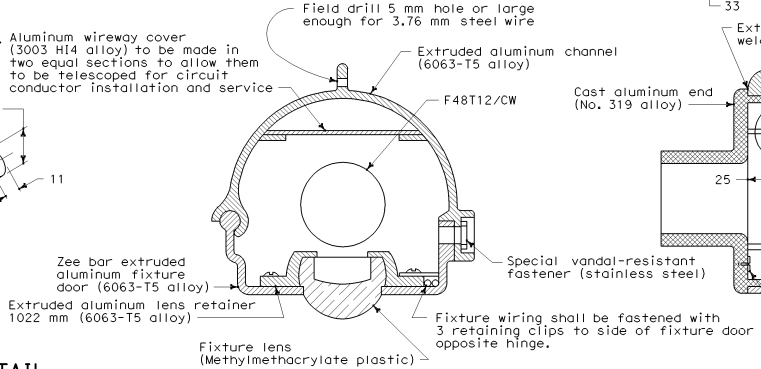

SECTION A-A

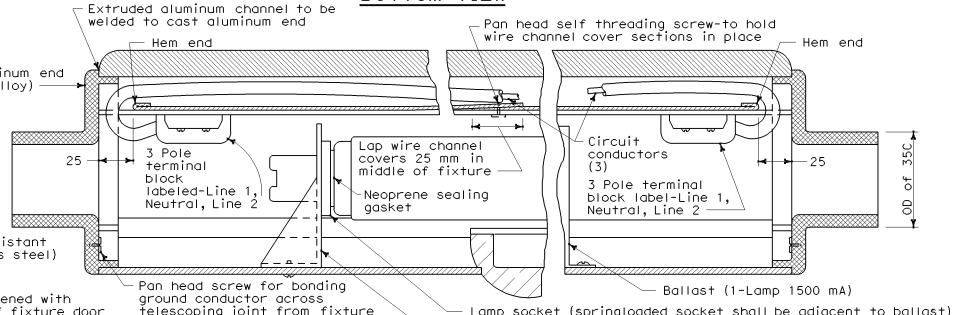

SECTION B-B

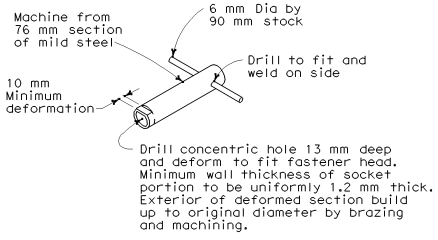

SPECIAL SOCKET WRENCH

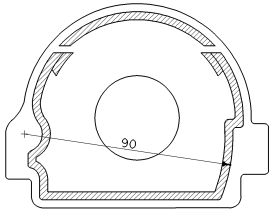

INSIDE VIEW OF END CASTING

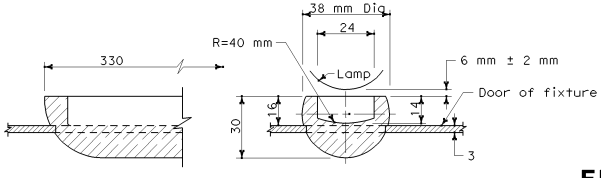

FIXTURE LENS

STATE OF CALIFORNIA
DEPARTMENT OF TRANSPORTATION

ELECTRICAL SYSTEMS (PEDESTRIAN OVERCROSSING FLUORESCENT LIGHTING FIXTURE)

NO SCALE

ALL DIMENSIONS ARE IN MILLIMETERS UNLESS OTHERWISE SHOWN

ES-12A

05-24-04

Back to Table of Contents

DIST	COUNTY	ROUTE	KILOMETER POST TOTAL PROJECT	SHEET NO.	TOTAL SHEETS

Caltrans Metric

REGISTERED ELECTRICAL ENGINEER

July 1, 2004
PLANS APPROVAL DATE

REGISTERED PROFESSIONAL ENGINEER Martha V. Styer No. E13738 Exp. 6-30-07 ELECTRICAL STATE OF CALIFORNIA

The State of California or its officers or agents shall not be responsible for the accuracy or completeness of electronic copies of this plan sheet.

To get to the Caltrans web site, go to: http://www.dot.ca.gov

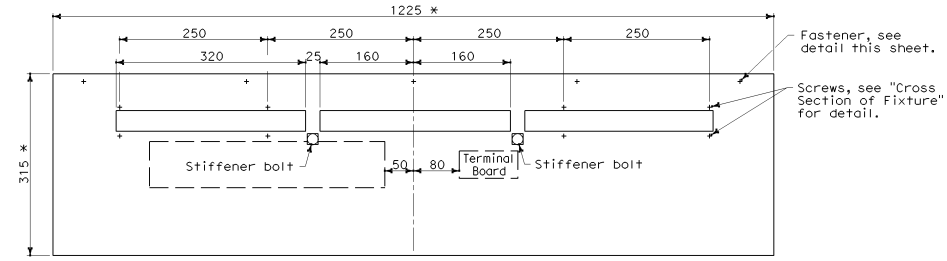

DOOR OF FIXTURE

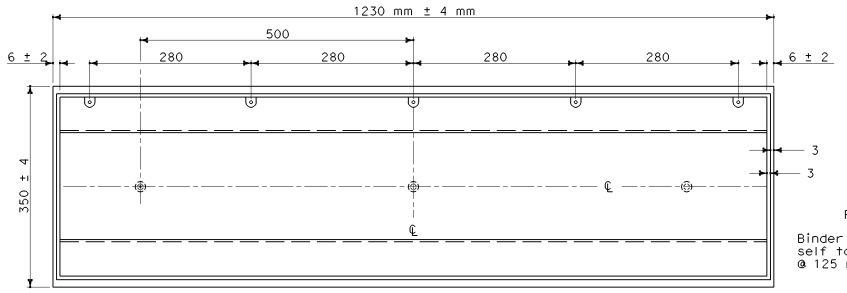

SHELL OF FIXTURE

* Dimensions of door shall vary to fit fixture shell within 2 mm of actual door recess dimensions.

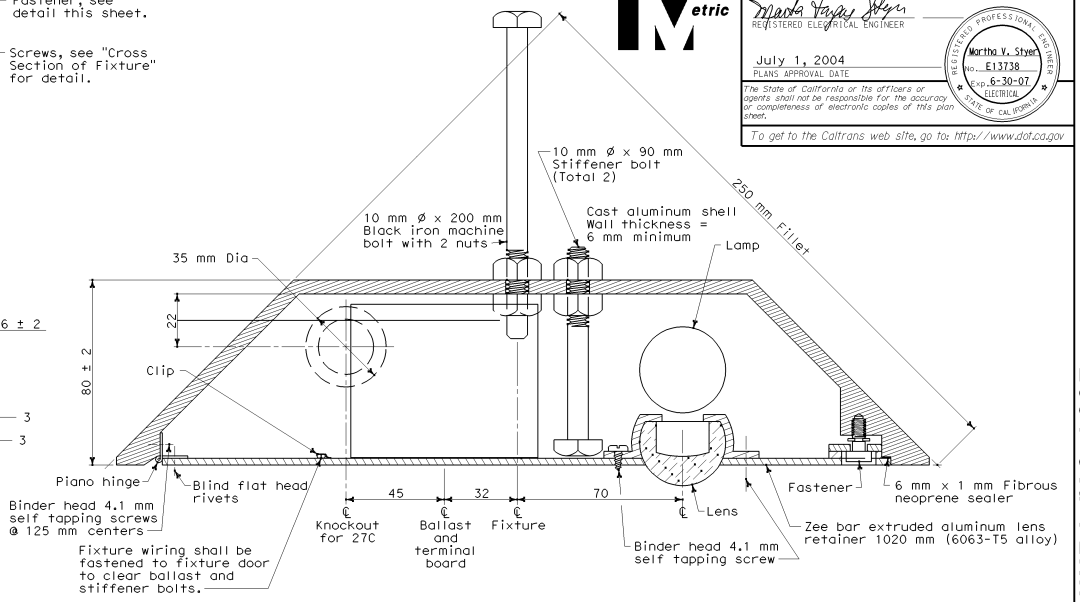

CROSS SECTION OF FIXTURE

NOTES

1. The maximum tolerance between door and lens shall be 0.4 mm. Casting dimensions of shell are nominal and are subject to such tolerances as are consistent with sound foundry practice.
2. For fixture locations, see Highway or Structure plans.

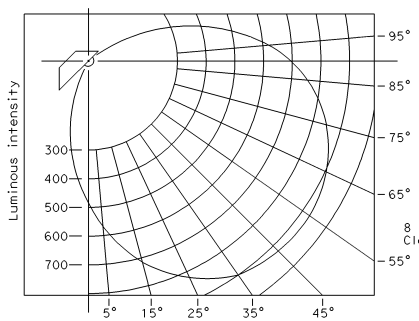

TYPICAL LUMINOUS INTENSITY DISTRIBUTION

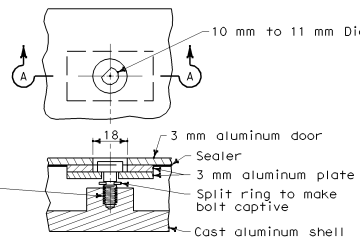

SECTION A-A

FASTENER DETAIL

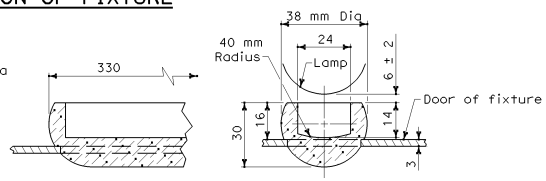

FIXTURE LENS

NOTE

When fixture shell is installed, stiffener bolts shall be set with about 3 mm clearance between bolt head and door before placing concrete. When fixture door is mounted, stiffener bolts shall be reset to barely clear inside of fixture door and inside nut shall be tightened.

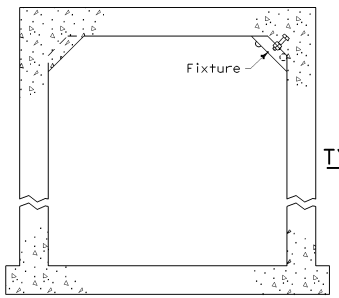

TYPICAL CROSS SECTION OF PEDESTRIAN UC

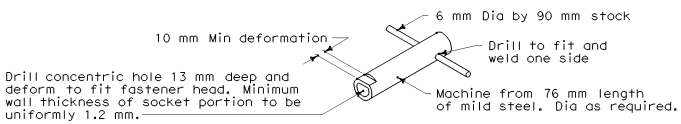

SPECIAL SOCKET WRENCH

STATE OF CALIFORNIA
DEPARTMENT OF TRANSPORTATION

ELECTRICAL SYSTEMS (PEDESTRIAN UNDERCROSSING FLUORESCENT LIGHTING FIXTURE)

NO SCALE

ALL DIMENSIONS ARE IN MILLIMETERS UNLESS OTHERWISE SHOWN

ES-12B

07-09-04

Back to Table of Contents

DIST	COUNTY	ROUTE	KILOMETER POST TOTAL PROJECT	SHEET NO.	TOTAL SHEETS

Caltrans Metric

REGISTERED ELECTRICAL ENGINEER

July 1, 2004
PLANS APPROVAL DATE

REGISTERED PROFESSIONAL ENGINEER
Martha V. Styer
No. E13738
Exp. 6-30-07
ELECTRICAL
STATE OF CALIFORNIA

The State of California or its officers or agents shall not be responsible for the accuracy or completeness of electronic copies of this plan sheet.

To get to the Caltrans web site, go to: http://www.dot.ca.gov

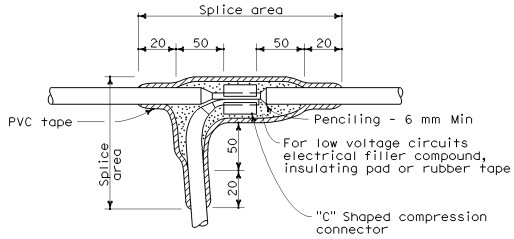

TYPE "C" SPLICE

Between 1 free-end and 1 through conductor

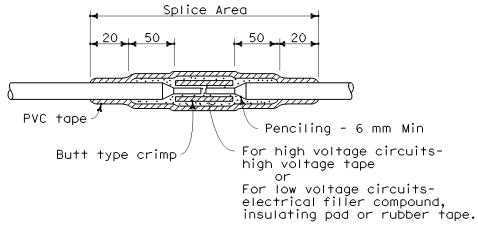

TYPE "S" SPLICE

Between 2 free-ends

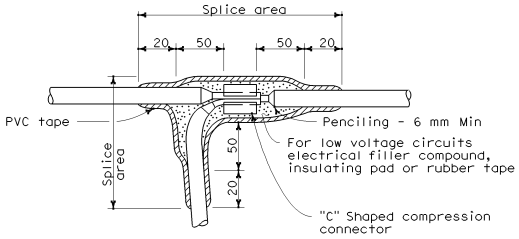

TYPE "T" SPLICE

For 3 free-ends

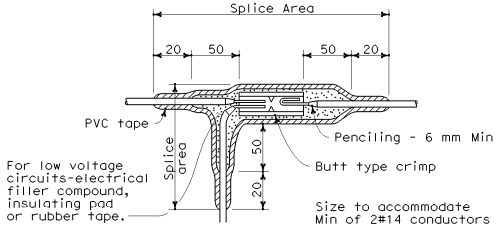

TYPE "ST" SPLICE

NOTES

1. Dimensions are minimum.
2. Rubber tapes shall be rolled after application.

INSULATION METHODS

Low Voltage Circuits (0-600 V)

METHOD "B"

1. Completely cover the splice area with electrical insulating coating and allow to dry.
2. Apply 2 layers of electrical insulating pad with minimum thickness of 4 mm each layer or 2 layers, half lapped, synthetic oil resistant, self fusing rubber tape.
3. Apply 3 layers half lapped polyvinyl chloride tape.
4. Cover entire splice with electrical insulating coating and allow to dry.

High Voltage Circuits (Over 600 V)

1. Completely cover the splice area with electrical insulating coating and allow to dry.
2. Apply high voltage tape to a minimum thickness equal to original insulation.
3. Apply 3 layers half lapped polyvinyl chloride tape.
4. Cover entire splice with electrical insulating coating and allow to dry.

STATE OF CALIFORNIA
DEPARTMENT OF TRANSPORTATION

ELECTRICAL SYSTEMS (SPLICING DETAILS)

NO SCALE

ALL DIMENSIONS ARE IN MILLIMETERS UNLESS OTHERWISE SHOWN

ES-13A

2004 Std PLAN ES-13A

05-24-04

Back to Table of Contents

DIST	COUNTY	ROUTE	KILOMETER POST TOTAL PROJECT	SHEET NO.	TOTAL SHEETS

Caltrans Metric

REGISTERED ELECTRICAL ENGINEER

July 1, 2004
PLANS APPROVAL DATE

REGISTERED PROFESSIONAL ENGINEER Martha V. Styer No. E13738 Exp. 6-30-07 ELECTRICAL STATE OF CALIFORNIA

The State of California or its officers or agents shall not be responsible for the accuracy or completeness of electronic copies of this plan sheet.

To get to the Caltrans web site, go to: http://www.dot.ca.gov

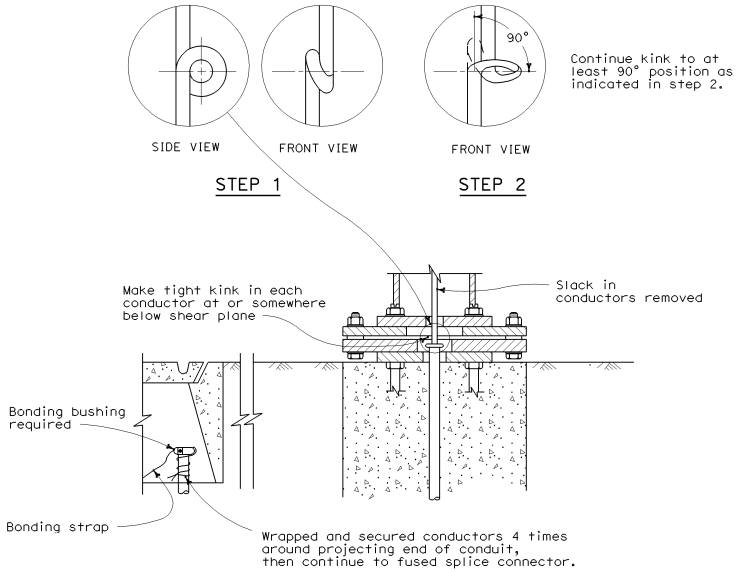

KINKING DETAIL FOR SLIP BASE STANDARDS

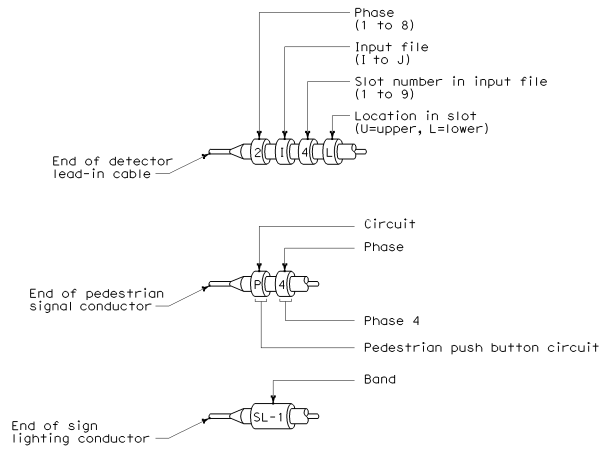

TYPICAL BANDING OF CONDUCTOR ENDS

Primary lines of multiple ballasts shall be provided with fused connectors.
Fuse ratings shall be as noted below.

CIRCUIT VOLTAGE	FUSE VOLTAGE RATING	FUSE CURRENT RATING															
		HPS LAMP BALLAST							LOW PRESSURE SODIUM BALLAST					INDUCTION SIGN LIGHTING	MULTIPLE TO MULTIPLE TRANSFORMERS (PRIMARY SIDE)		
		70 W	100 W	150 W	200 W	250 W	310 W	400 W	35 W	55 W	90 W	135 W	180 W	85 W	1 kVA	2 kVA	3 kVA
120 V	250 V	5	5	5	5	6	10	10	5	5	8	10	10	5	10	25	35
240 V	250 V	5	5	5	5	5	5	5	3	3	4	5	5	5	6	10	20
480 V	500-600 V	5	5	5	5	5	5	5	2	2	2	3	3	1*	3	6	10

* See Standard Plan ES-15D, Type SC3 Control.

FUSE RATINGS FOR FUSED CONNECTORS

LUMINAIRE BALLAST FUSING

STATE OF CALIFORNIA
DEPARTMENT OF TRANSPORTATION

ELECTRICAL SYSTEMS (WIRING DETAILS AND FUSE RATINGS)

NO SCALE

ALL DIMENSIONS ARE IN MILLIMETERS UNLESS OTHERWISE SHOWN

ES-13B

07-28-04

Back to Table of Contents

DIST	COUNTY	ROUTE	KILOMETER POST TOTAL PROJECT	SHEET NO.	TOTAL SHEETS

Caltrans Metric

REGISTERED ELECTRICAL ENGINEER

July 1, 2004
PLANS APPROVAL DATE

REGISTERED PROFESSIONAL ENGINEER Martha V. Styer No. E13738 Exp. 6-30-07 ELECTRICAL STATE OF CALIFORNIA

The State of California or its officers or agents shall not be responsible for the accuracy or completeness of electronic copies of this plan sheet.

To get to the Caltrans web site, go to: http://www.dot.ca.gov

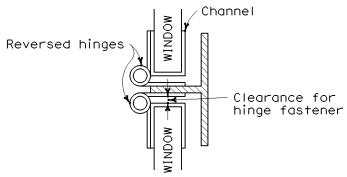

HINGE DETAIL

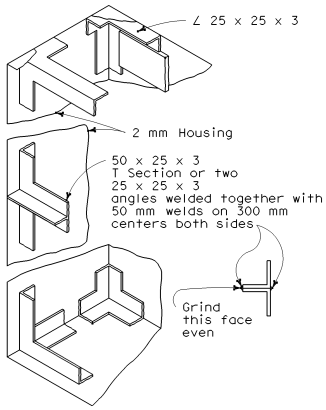

FRAMING DETAILS

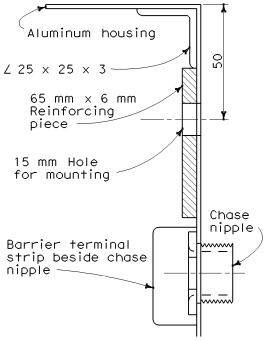

REINFORCING DETAIL

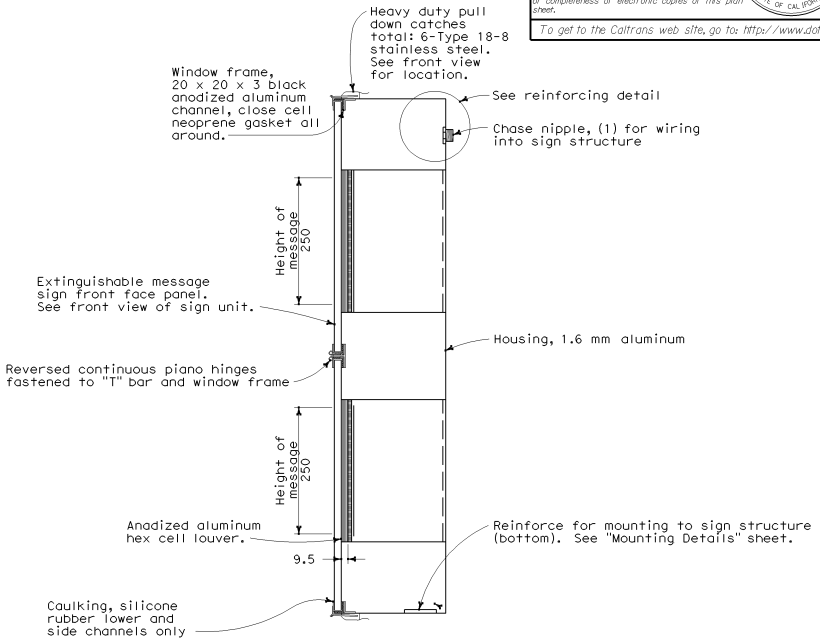

CROSS-SECTION OF SIGN

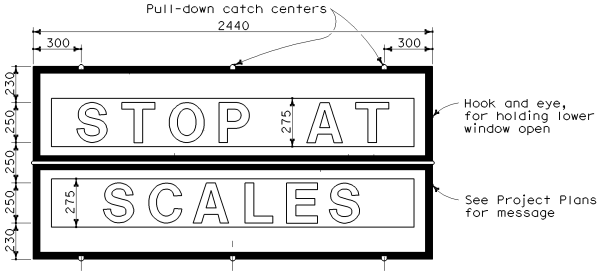

FRONT VIEW OF SIGN UNIT

Note: See Wiring Notes and Symbols on ES-14B.

STATE OF CALIFORNIA
DEPARTMENT OF TRANSPORTATION

ELECTRICAL SYSTEMS (EXTINGUISHABLE MESSAGE SIGN 250 mm LETTERS)

NO SCALE

ALL DIMENSIONS ARE IN MILLIMETERS UNLESS OTHERWISE SHOWN

ES-14A

07-20-04

2004 Std PLAN ES-14A

Back to Table of Contents

DIST	COUNTY	ROUTE	KILOMETER POST TOTAL PROJECT	SHEET NO.	TOTAL SHEETS

Caltrans Metric

REGISTERED ELECTRICAL ENGINEER

July 1, 2004
PLANS APPROVAL DATE

REGISTERED PROFESSIONAL ENGINEER
Martha V. Styer
No. E13738
Exp. 6-30-07
ELECTRICAL
STATE OF CALIFORNIA

The State of California or its officers or agents shall not be responsible for the accuracy or completeness of electronic copies of this plan sheet.

To get to the Caltrans web site, go to: http://www.dot.ca.gov

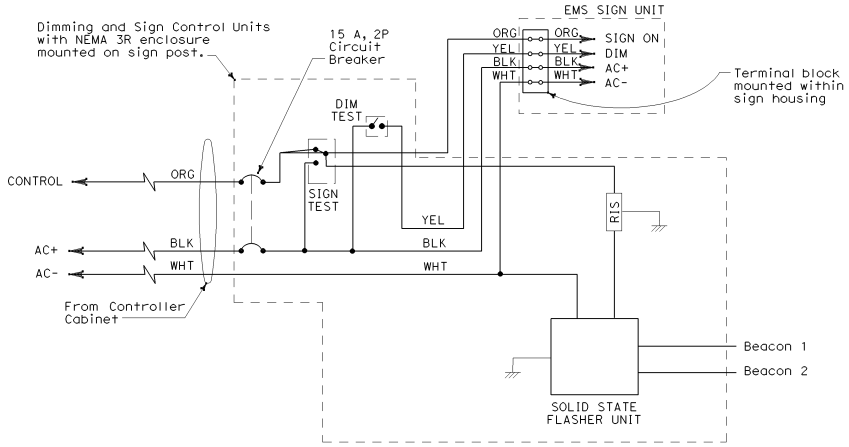

STATE OF CALIFORNIA
DEPARTMENT OF TRANSPORTATION

ELECTRICAL SYSTEMS (EXTINGUISHABLE MESSAGE SIGN

NO SCALE

ALL DIMENSIONS ARE IN MILLIMETERS UNLESS OTHERWISE SHOWN

ES-14B

2004 Std PLAN ES-14B

07-28-04

Back to Table of Contents

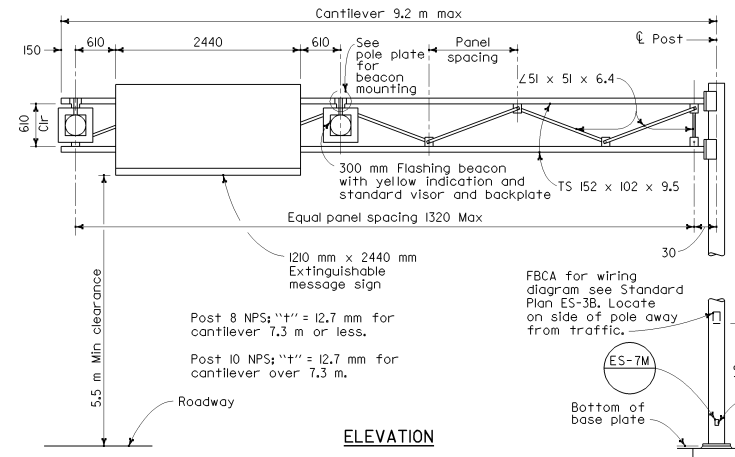

Post 8 NPS; "t" = 12.7 mm for cantilever 7.3 m or less.

Post 10 NPS; "t" = 12.7 mm for cantilever over 7.3 m.

ELEVATION

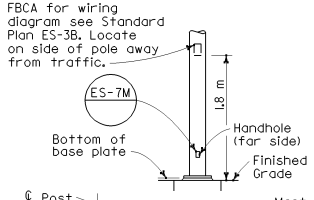

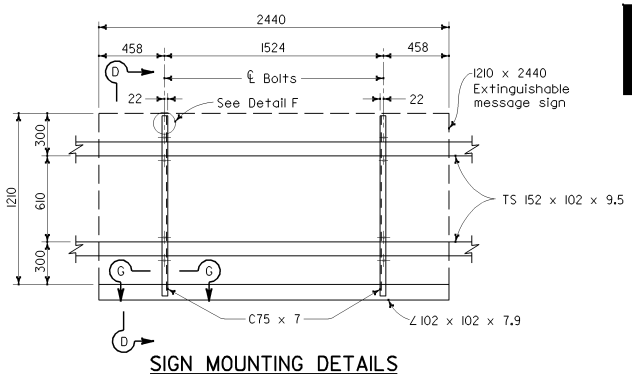

SIGN MOUNTING DETAILS

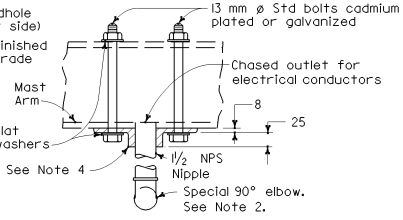

SECTION E-E

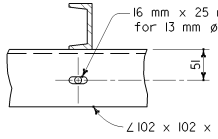

SECTION G-G

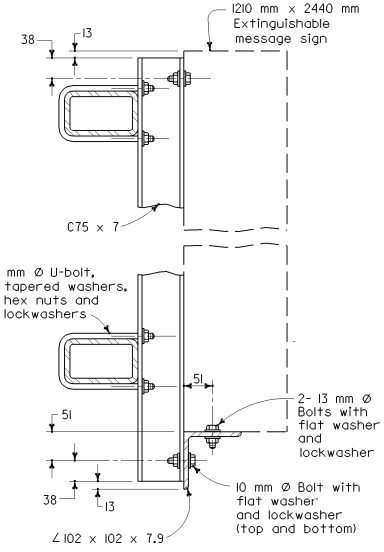

SECTION D-D

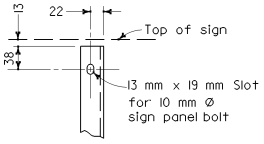

DETAIL F

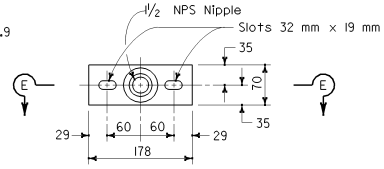

ELEVATION

POLE PLATE FOR BEACON MOUNTING

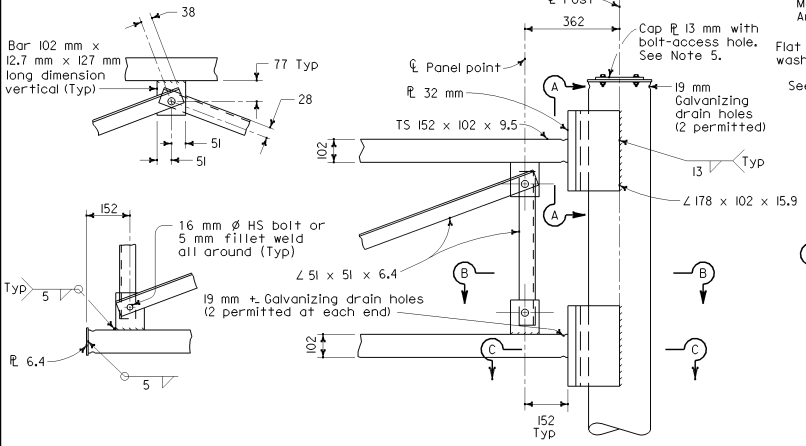

TRUSS FRAME CONNECTION DETAILS

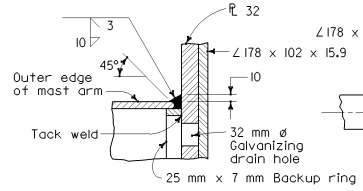

SECTION C-C

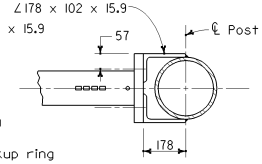

SECTION B-B

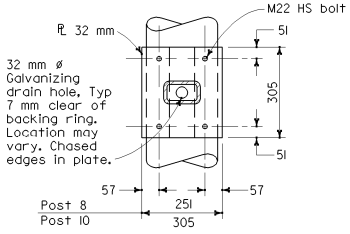

SECTION A-A

NOTES

1. For general notes, base plates, anchor bolts and foundations refer to Lightweight Signs, Post Details and Foundation Details sheets of the Standard Plans.
2. For details of special 90° elbow, see Standard Plans ES-4D.
3. For sign structure dimensions, see Project Plans.
4. Pole plate shall be bronze, aluminum or ductile iron as specified in the Standard Specifications.
5. For Bolt-Access Hole Details, see Overhead Signs-Truss Frame Juncture Details.

Caltrans Metric

DIST	COUNTY	ROUTE	KILOMETER POST TOTAL PROJECT	SHEET NO.	TOTAL SHEETS

REGISTERED CIVIL ENGINEER

July 1, 2004
PLANS APPROVAL DATE

REGISTERED PROFESSIONAL ENGINEER Tiliat Sattar NO. C42892 Exp. 03-31-2006 CIVIL STATE OF CALIFORNIA

The State of California or its officers or agents shall not be responsible for the accuracy or completeness of electronic copies of this plan sheet.

To get to the Caltrans web site, go to: http://www.dot.ca.gov

STATE OF CALIFORNIA
DEPARTMENT OF TRANSPORTATION

ELECTRICAL SYSTEMS EXTINGUISHABLE MESSAGE SIGN AND FLASHING BEACONS

NO SCALE

ALL DIMENSIONS ARE IN MILLIMETERS UNLESS OTHERWISE SHOWN

ES-14C

07-28-04

Back to Table of Contents

Length of Panel (Meter)	Number of Fixtures (Each)	Fixture Spacing (Millimeters) See Notes
1.5	1	750
1.8		900
2.1		1050
2.4		1200
2.7		1350
3		1500
3.4		1650
3.7		1850
4		2000
4.3		2150
4.6		2300
4.9		2450
5.2	2	1300:2600
5.5		1360:2780
5.8		1440:2920
6.1		1520:3060
6.4		1600:3200
6.7		1670:3360
7		1750:3500
7.3		1820:3660
7.6		1900:3800
8		2000:4000
8.2		2050:4100
8.5		2120:4260
8.8		2200:4400
9.2		2300:4600
9.5		2370:4750
9.8		2450:4900
10.1	3	1680:3370
10.4		1730:3470
10.7		1780:3570
11		1830:3670
11.3		1880:3770
11.6		1930:3870
11.9		1980:3970
12.2		2030:4070
12.5		2080:4170
12.8		2130:4270
13.1		2180:4370
13.4		2230:4470
13.7		2280:4570
14		2330:4670
14.3		2380:4770
14.6		2430:4870
15	4	1890:3740
15.3		1920:3820
15.6		1950:3900
15.9		1980:3980
16.2		2010:4060
16.5		2070:4120
16.8		2100:4200
17.1		2160:4260
17.4		2190:4340
17.7		2250:4400
18		2280:4480
18.3		2280:4580
18.6		2310:4660
18.9		2340:4740
19.2		2400:4800
19.5		2430:4880

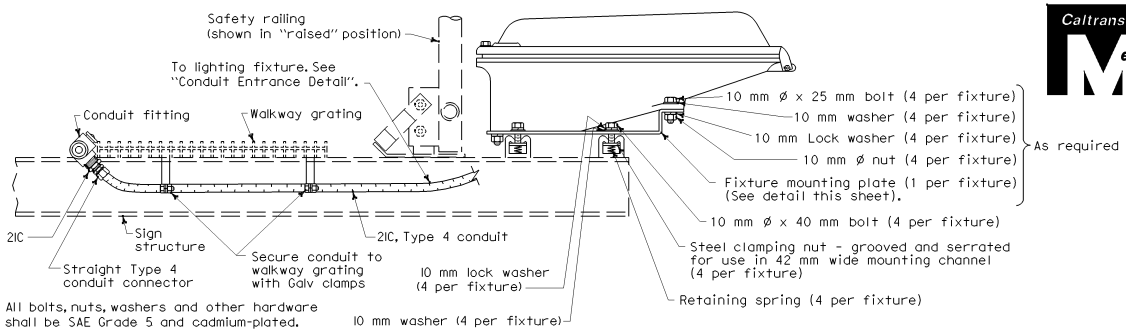

All bolts, nuts, washers and other hardware shall be SAE Grade 5 and cadmium-plated.

LIGHTING FIXTURE MOUNTING DETAIL (TYPICAL)

NOTES

1. The first number listed is the dimension from the edge of the sign panel to the center of the end-most fixture. The second number listed is the dimension between centers of successive fixtures.
2. Where adjacent sign panels are spaced 300 mm or less the combination of these panels (and spaces) shall be considered a single panel.
3. Physical configuration and mounting details may vary from what is shown.

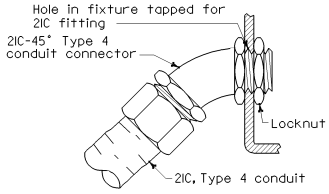

CONDUIT ENTRANCE DETAIL

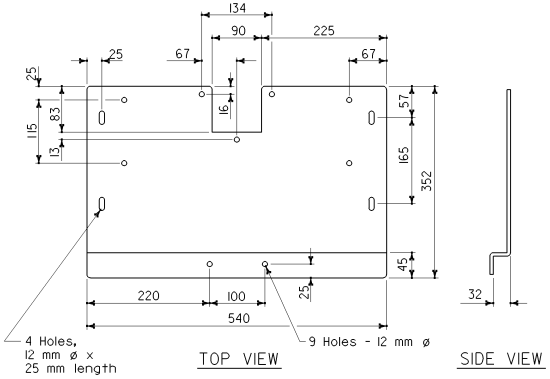

SIGN ILLUMINATION FIXTURE MOUNTING PLATE (TYPICAL)

- Material: 3.42 mm hot-dip galvanized sheet steel after fabrication.
- Left side is symmetrical with right side.

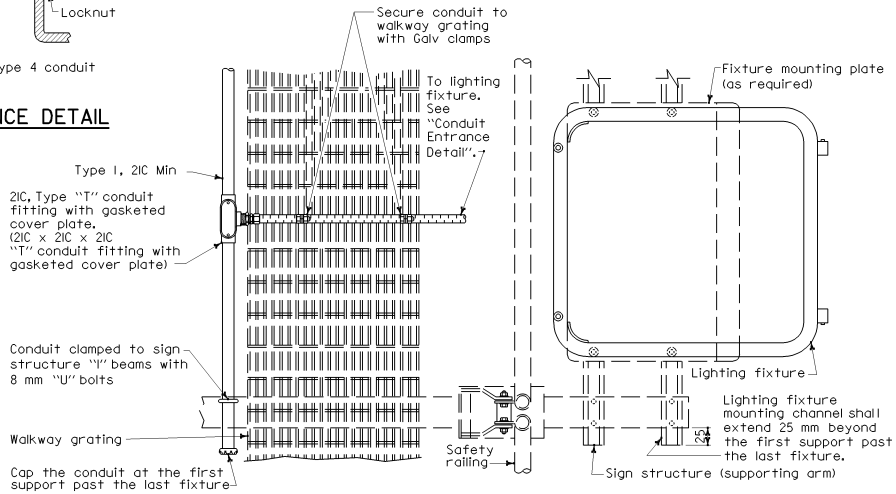

Caltrans Metric

DIST	COUNTY	ROUTE	KILOMETER POST TOTAL PROJECT	SHEET NO.	TOTAL SHEETS

REGISTERED ELECTRICAL ENGINEER

July 1, 2004
PLANS APPROVAL DATE

REGISTERED PROFESSIONAL ENGINEER Martha V. Styer No. E13738 Exp. 6-30-07 ELECTRICAL STATE OF CALIFORNIA

The State of California or its officers or agents shall not be responsible for the accuracy or completeness of electronic copies of this plan sheet.

To get to the Caltrans web site, go to: http://www.dot.ca.gov

STATE OF CALIFORNIA
DEPARTMENT OF TRANSPORTATION

ELECTRICAL SYSTEMS (SIGN ILLUMINATION EQUIPMENT)

NO SCALE

ALL DIMENSIONS ARE IN MILLIMETERS UNLESS OTHERWISE SHOWN

ES-15A

2004 Std PLAN ES-15A

07-28-04

Back to Table of Contents

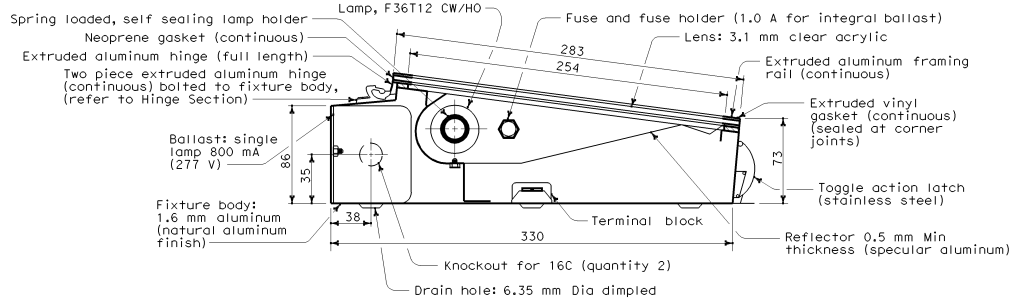

SECTION-LIGHTING FIXTURE

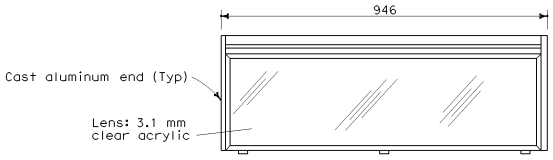

TOP VIEW

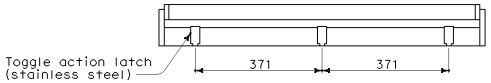

FRONT VIEW

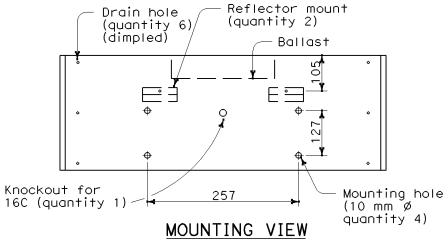

MOUNTING VIEW

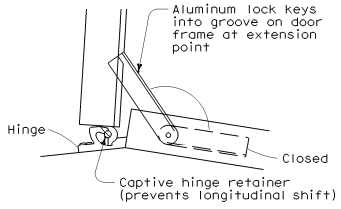

HINGE SECTION

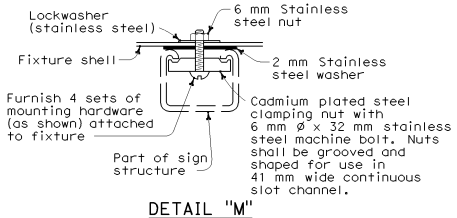

DETAIL "M"

FIXTURE MOUNTING ON CONTINUOUS SLOT CHANNEL

SIGN LOAD (WATTS) AND FUSING	
1 Lamp and ballast - 75 W	1 A
2 Lamps and ballast - 150 W	2.5 A
3 Lamps and ballast - 225 W	3 A

Caltrans Metric

DIST	COUNTY	ROUTE	KILOMETER POST TOTAL PROJECT	SHEET NO.	TOTAL SHEETS

REGISTERED ELECTRICAL ENGINEER

July 1, 2004
PLANS APPROVAL DATE

REGISTERED PROFESSIONAL ENGINEER Martha V. Styer No. E13738 Exp. 6-30-07 ELECTRICAL STATE OF CALIFORNIA

The State of California or its officers or agents shall not be responsible for the accuracy or completeness of electronic copies of this plan sheet.

To get to the Caltrans web site, go to: http://www.dot.ca.gov

NOTES

1. Wiring between ballast box and nearest fixture and between fixtures shall be run in 16C, Type 4 conduit.
2. Conduit shall be secured to nearest member using one-hole galvanized malleable iron or steel straps at 1.5 m maximum centers and brass machine screws tapped into the member.
3. Ballasts and terminal boards shall be marked with legible symbols. Conductors shall be tagged and their identification marked on the corresponding terminal on the terminal board as shown on the Typical Fixture Wiring Diagram. An alternative cover design shall be submitted for approval.
4. Ballast shall be one, two or three lamp types as required, rated at 800 mA.
5. Each ballast shall be fused with 32 mm x 6 mm slow-blow glass tube fuse.
6. Fuseholder shall be a panel mounted type, with screw type finger knob.
7. At the option of the Contractor, the fixture may be supplied with an integral ballast. The ballast box will not be required when fixtures with integral ballasts are supplied.

STATE OF CALIFORNIA
DEPARTMENT OF TRANSPORTATION

ELECTRICAL SYSTEMS (915 mm FLUORESCENT SIGN ILLUMINATION EQUIPMENT)

NO SCALE

ALL DIMENSIONS ARE IN MILLIMETERS UNLESS OTHERWISE SHOWN

ES-15B

07-20-04

Back to Table of Contents

Caltrans Metric

DIST	COUNTY	ROUTE	KILOMETER POST TOTAL PROJECT	SHEET NO.	TOTAL SHEETS

REGISTERED ELECTRICAL ENGINEER

July 1, 2004
PLANS APPROVAL DATE

REGISTERED PROFESSIONAL ENGINEER Martha V. Styer No. E13738 Exp. 6-30-07 ELECTRICAL STATE OF CALIFORNIA

The State of California or its officers or agents shall not be responsible for the accuracy or completeness of electronic copies of this plan sheet.

To get to the Caltrans web site, go to: http://www.dot.ca.gov

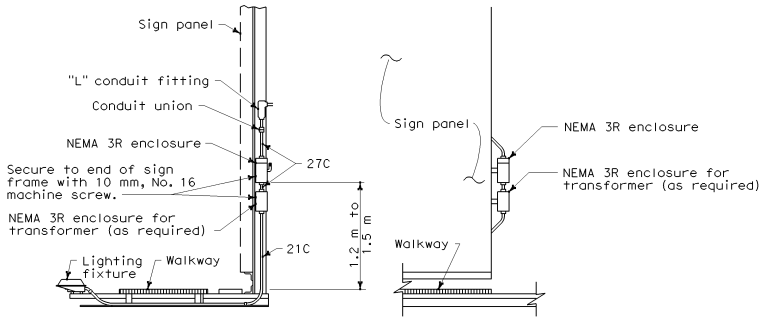

SIDE VIEW FRONT VIEW

TYPICAL SIGN ILLUMINATION EQUIPMENT INSTALLATION FOR OVERHEAD SIGNS BRIDGE MOUNTED

Contactor and test switch enclosure shall be readily accessible from the sign walkway.

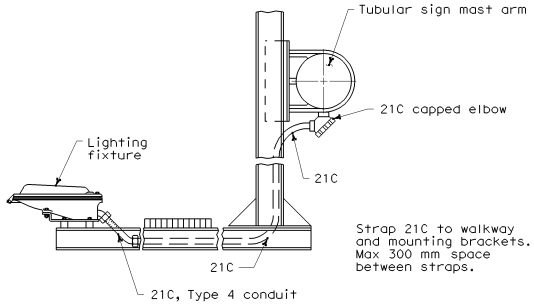

TYPICAL SIGN ILLUMINATION EQUIPMENT INSTALLATION FOR OVERHEAD SIGNS TUBULAR

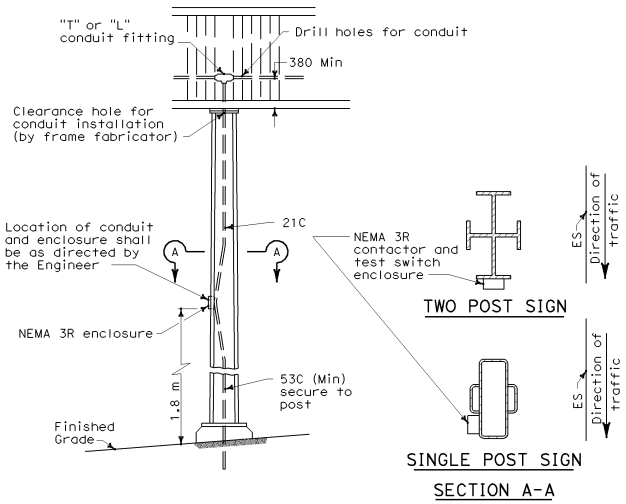

TYPICAL SIGN ILLUMINATION EQUIPMENT INSTALLATION FOR OVERHEAD SIGNS BOX BEAM POST

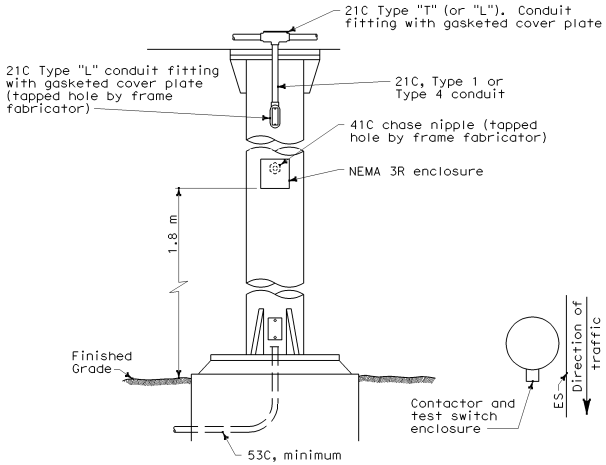

TYPICAL SIGN ILLUMINATION EQUIPMENT INSTALLATION FOR OVERHEAD SIGNS ROUND POST

NOTES

1. Type 4 conduit shall be secured to the nearest walkway bracket using one-hole galvanized malleable iron or steel straps and brass machine screws tapped into the bracket.
2. See Overhead Signs Standard Plans for overhead signs and frame jucture details for photoelectric unit installation.
3. Enclosures and straps shall be secured by 6 mm maximum size screws.

STATE OF CALIFORNIA
DEPARTMENT OF TRANSPORTATION

ELECTRICAL SYSTEMS (SIGN ILLUMINATION EQUIPMENT)

NO SCALE

ALL DIMENSIONS ARE IN MILLIMETERS UNLESS OTHERWISE SHOWN

ES-15C

07-19-04

Back to Table of Contents

DIST	COUNTY	ROUTE	KILOMETER POST TOTAL PROJECT	SHEET NO.	TOTAL SHEETS

Caltrans Metric

REGISTERED ELECTRICAL ENGINEER

July 1, 2004
PLANS APPROVAL DATE

REGISTERED PROFESSIONAL ENGINEER
Martha V. Styer
No. E13738
Exp. 6-30-07
ELECTRICAL
STATE OF CALIFORNIA

The State of California or its officers or agents shall not be responsible for the accuracy or completeness of electronic copies of this plan sheet.

To get to the Caltrans web site, go to: http://www.dot.ca.gov

NOTES (FOR LIGHTING AND SIGN ILLUMINATION CONTROL)

1. The ballast voltages of lighting fixtures and luminaires shall match line service voltages.
2. Voltage rating of photoelectric controls shall conform to the service voltage indicated on the plans.
3. Terminal strip shall be provided for wiring to fixtures.
4. Types SC1A and SC2A are similar to Types SC1 and SC2 respectively except test switch and wiring are not required.

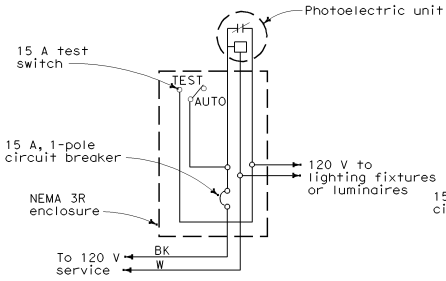

TYPE LC1 CONTROL

For 120 V unswitched circuit with no more than 800 W load.

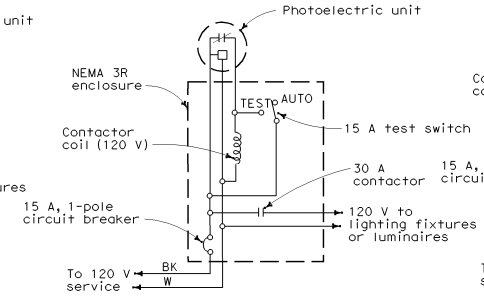

TYPE LC2 CONTROL

For 120 V unswitched circuit

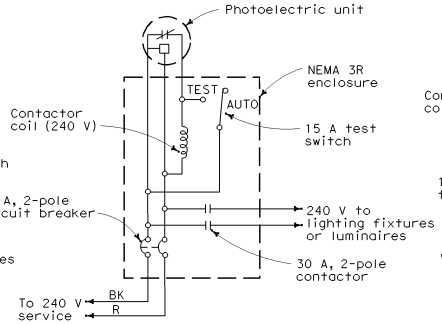

(For 240 V unswitched circuit)

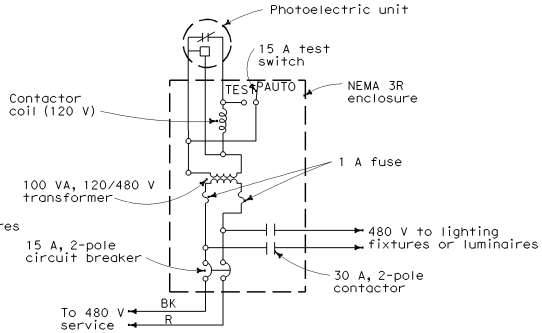

(For 480 V unswitched circuit)

TYPE LC3 CONTROL

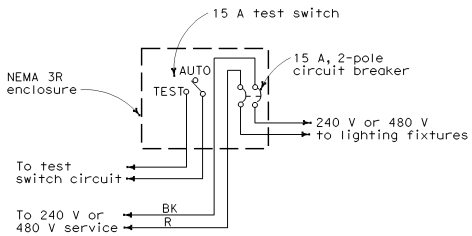

TYPE SC1 CONTROL

For 240 V or 480 V switched circuit, see Note 4 for Type SC1A

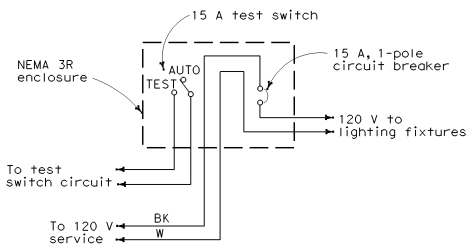

TYPE SC2 CONTROL

For 120 V switched circuit, see Note 4 for Type SC2A

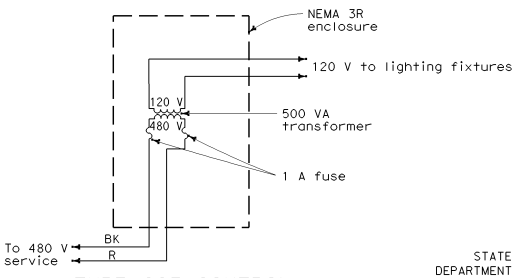

TYPE SC3 CONTROL

(For 480 V switched sign circuit)

STATE OF CALIFORNIA
DEPARTMENT OF TRANSPORTATION

ELECTRICAL SYSTEMS (LIGHTING AND SIGN ILLUMINATION CONTROL)

NO SCALE

ALL DIMENSIONS ARE IN MILLIMETERS UNLESS OTHERWISE SHOWN

ES-15D

07-28-04

2004 Std PLAN ES-15D

Back to Table of Contents

Pole Type	Pole Data				Base Plate Data				"d" 610 mm ø CIDH Pile (m)	Structural Steel kg plus 3.5% Galvanizing
	Height "h" (m)	Min OD (mm)		Thickness (mm)	"C" (mm)	Thickness (mm)	Anchor Bolts (mm)			
		BASE	TOP				SIZE	BC=BOLT CIRCLE		
CCTV 25	7.62	187	98	4.55	305	25.4	25 x 920 x 102	267	1.83	180
CCTV 30	9.14	203	98	4.55	305	25.4	25 x 920 x 102	279	2.13	215
CCTV 35	10.67	219	98	4.55	305	25.4	25 x 920 x 102	305	2.13	250
CCTV 40	12.19	238	98	4.55	330	25.4	32 x 920 x 102	330	2.13	295
CCTV 45	13.72	254	98	4.55	330	25.4	32 x 920 x 102	343	2.44	340

Caltrans Metric

DIST	COUNTY	ROUTE	KILOMETER POST TOTAL PROJECT	SHEET NO.	TOTAL SHEETS

REGISTERED CIVIL ENGINEER

July 1, 2004
PLANS APPROVAL DATE

REGISTERED PROFESSIONAL ENGINEER Tillat Sattar No. C42892 Exp. 03-31-2006 CIVIL STATE OF CALIFORNIA

The State of California or its officers or agents shall not be responsible for the accuracy or completeness of electronic copies of this plan sheet.

To get to the Caltrans web site, go to: http://www.dot.ca.gov

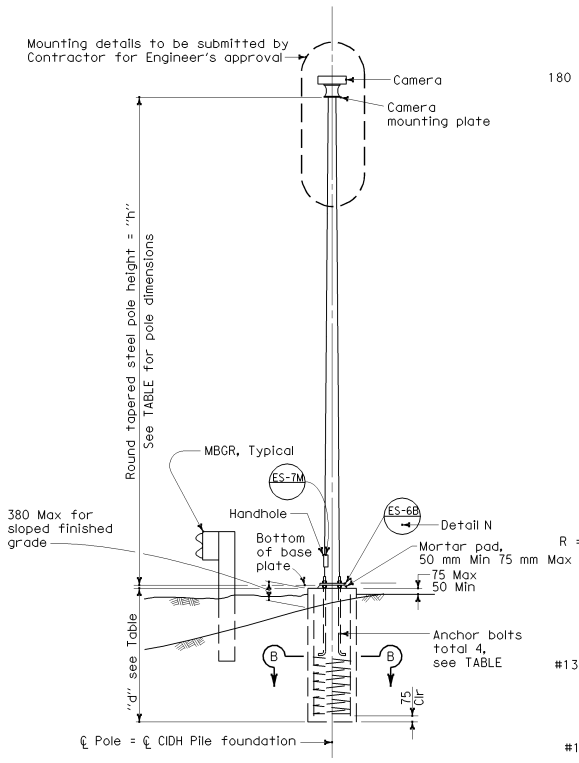

ELEVATION

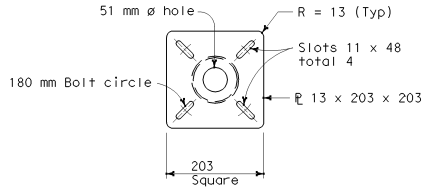

CAMERA MOUNTING PLATE

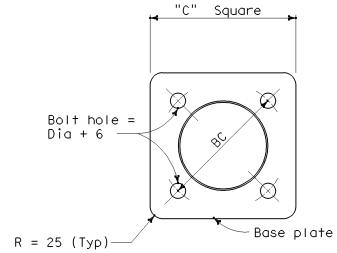

BASE PLATE

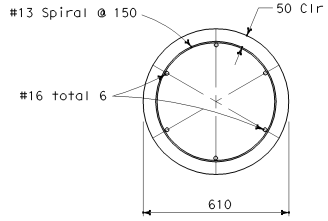

SECTION B-B

GENERAL NOTES:

SPECIFICATIONS

Design : AASHTO Standard specifications for structural supports for highway signs, luminaires and traffic signals dated 2001.

LOADING

Wind Loadings : 129 km/h AASHTO

UNIT STRESSES

Structural Steel : fy = 331 MPa tapered steel tube (Pole)
fy = 248 MPa unless noted otherwise noted
Anchor bolts = A307
Reinforced Concrete : f'c = 25 MPa
fy = 276 MPa

NOTES:

1. The Contractor shall verify controlling field dimensions before ordering or fabricating any material.
2. All steel shall be galvanized after fabrication.
3. During pole erection, the post shall be raked as necessary with the use of leveling nuts to provide a plumb pole axis.

STATE OF CALIFORNIA
DEPARTMENT OF TRANSPORTATION

ELECTRICAL SYSTEMS (CLOSED CIRCUIT TELEVISION POLE DETAILS)

NO SCALE

ALL DIMENSIONS ARE IN MILLIMETERS UNLESS OTHERWISE SHOWN

ES-16A

2004 Std PLAN ES-16A

07-19-04

Back to Table of Contents

Pole Extension Type	Pole Data			
	Height "H" (m)	Min OD (mm)		Thickness (mm)
		BASE	TOP	
CCTV 5	1.5	116	98	4.55
CCTV 10	3.0	133	98	4.55
CCTV 15	4.5	151	98	4.55

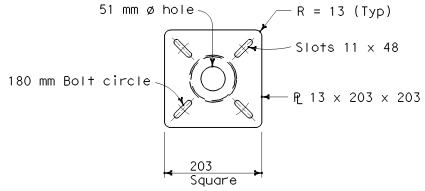

CAMERA MOUNTING PLATE

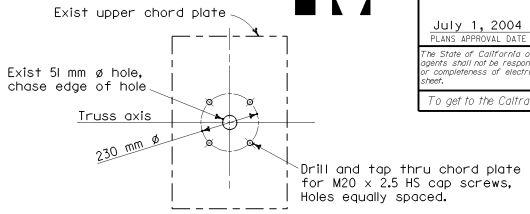

UPPER CHORD PLATE S13

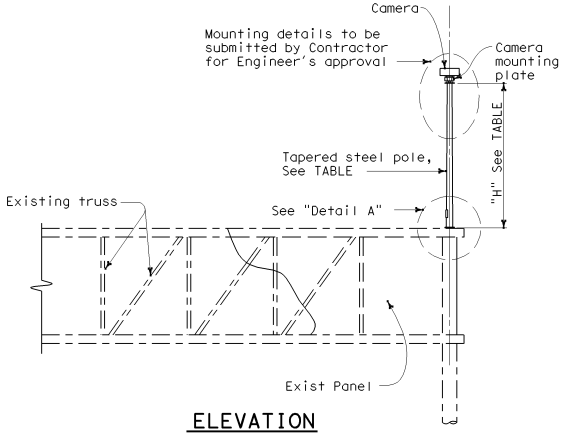

ELEVATION

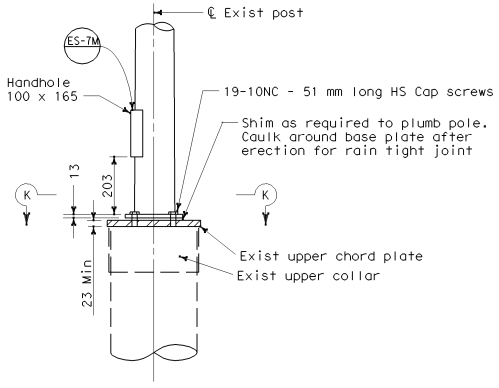

DETAIL A

HIGH STRENGTH CAP SCREWS

16 - 11NC - 45

Length (mm)
Threads (per inch)
Size (mm)

GENERAL NOTES:

SPECIFICATIONS

Design : AASHTO Standard specifications for structural supports for highway signs, luminaires and traffic signals dated 2001.

LOADING

Wind Loadings : 129 km/h AASHTO

UNIT STRESSES

Structural Steel : fy = 331 MPa tapered steeltube (Pole)
fy = 248 MPa unless noted otherwise noted

NOTES:

1. The Contractor shall verify controlling field dimensions before ordering or fabricating any material.
2. All steel shall be galvanized after fabrication.
3. Bolt hole locations may vary at the discretion of the Engineer.

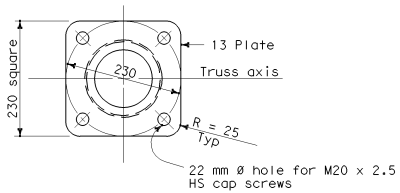

SECTION K-K

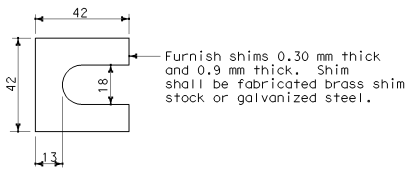

SHIM DETAIL

Caltrans Metric

DIST	COUNTY	ROUTE	KILOMETER POST TOTAL PROJECT	SHEET NO.	TOTAL SHEETS

REGISTERED CIVIL ENGINEER

July 1, 2004
PLANS APPROVAL DATE

REGISTERED PROFESSIONAL ENGINEER Tiliat Sattar No. C42892 Exp. 03-31-2006 CIVIL STATE OF CALIFORNIA

The State of California or its officers or agents shall not be responsible for the accuracy or completeness of electronic copies of this plan sheet.

To get to the Caltrans web site, go to: http://www.dot.ca.gov

STATE OF CALIFORNIA
DEPARTMENT OF TRANSPORTATION

ELECTRICAL SYSTEMS (CLOSED CIRCUIT TELEVISION POLE DETAILS-OVERHEAD SIGN MOUNTED)

NO SCALE

ALL DIMENSIONS ARE IN MILLIMETERS UNLESS OTHERWISE SHOWN

ES-16B

2004 Std PLAN ES-16B

07-19-04

Back to Table of Contents

Post Type	Pole Data				Base Plate Data (mm)					CIDH Pile Data		
	Height "h" (m)	Min OD		Min Thickness	Dia	Thickness	Anchor Bolts			"D" (mm)	"L" (m)	Pile Reinf
		BASE	TOP				Total	Size "d"	BC			
CCTV 90	27.4	610	281	4.55*	914	51	6	51	737	1067	3.6	15 - #22
CCTV 80	24.3	559	256	4.55*	864	51	6	51	686	1067	3.3	15 - #22
CCTV 70	21.3	508	260	4.55	813	51	6	51	635	1067	3.0	15 - #22
CCTV 60	18.2	457	248	4.55	762	51	6	51	584	1067	2.7	15 - #22

* Lower pole segment thickness, see Pole Details

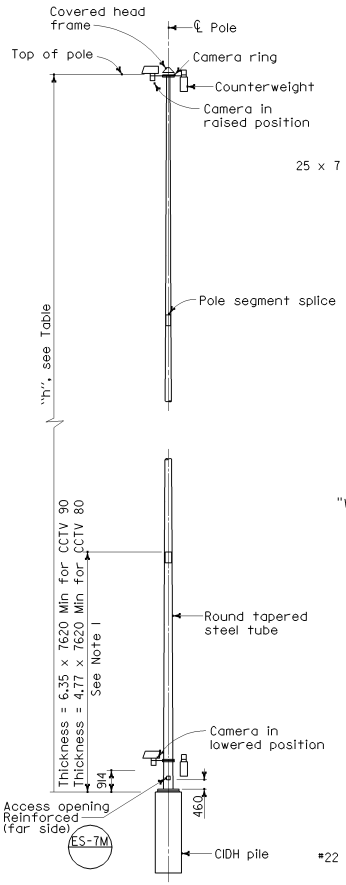

POLE DETAILS

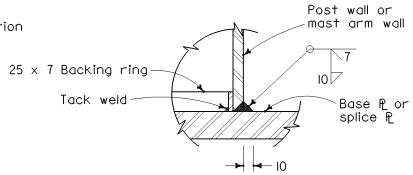

WELD DETAIL

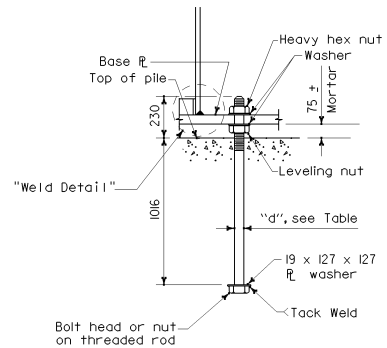

ANCHOR BOLT DETAIL

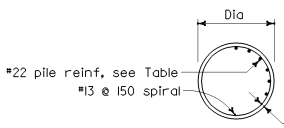

SECTION A-A

CIDH PILE DETAILS

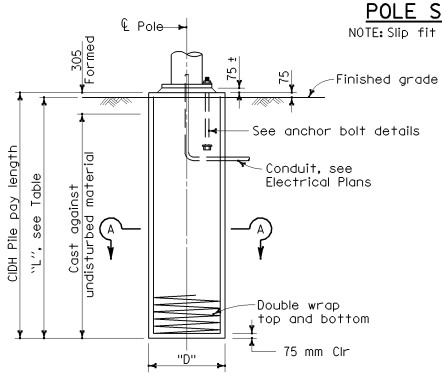

TYPICAL ELEVATION

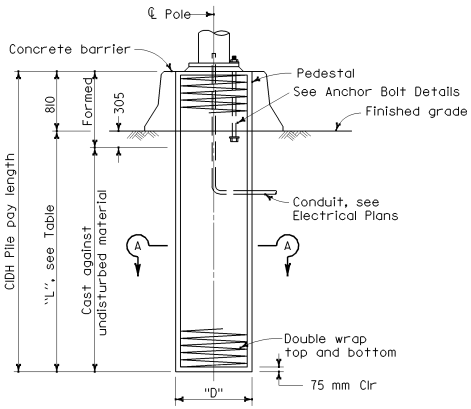

MEDIAN LOCATION

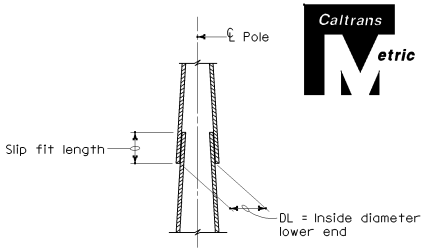

POLE SEGMENT SPLICE DETAIL

NOTE: Slip fit length shall not be less than 1.5 DL.

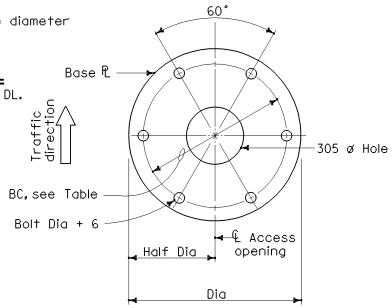

BASE PLATE DETAILS

GENERAL NOTES:

SPECIFICATIONS

Design : AASHTO Standard specifications for structural supports for highway signs, luminaires and traffic signals dated 2001.

LOADING

Wind Loadings : 129 km/h AASHTO

UNIT STRESSES

Structural Steel : f_s Maximum allowed for design of tapered steel tube (pole) to be 379 MPa.

NOTES

1. Pole details shall suit the lowering device and this foundation plan. Pole details shall be submitted to the Engineer for approval.
2. Pole finishes shall be galvanized.
3. For camera details, see Electrical Plans.
4. Foundation design is based on a maximum wind velocity of 129 km/h.

STATE OF CALIFORNIA
DEPARTMENT OF TRANSPORTATION

ELECTRICAL SYSTEMS (CLOSED CIRCUIT TELEVISION 18.2 m TO 27.4 m HIGH MAST POLE FOUNDATION DETAILS)

NO SCALE

ALL DIMENSIONS ARE IN MILLIMETERS UNLESS OTHERWISE SHOWN

ES-16C

Caltrans Metric

DIST	COUNTY	ROUTE	KILOMETER POST TOTAL PROJECT	SHEET NO.	TOTAL SHEETS

REGISTERED CIVIL ENGINEER

July 1, 2004
PLANS APPROVAL DATE

REGISTERED PROFESSIONAL ENGINEER Tillat Sattar No. C42892 Exp. 03-31-2006 CIVIL STATE OF CALIFORNIA

The State of California or its officers or agents shall not be responsible for the accuracy or completeness of electronic copies of this plan sheet.

To get to the Caltrans web site, go to: http://www.dot.ca.gov

2004 Std PLAN ES-16C

07-19-04

Back to Table of Contents

Index

Page No.

-A-

Abbreviations and Acronyms, General
(A10A, A10B) 1, 2
Abbreviations, Planting and
Irrigation (H1)..... 201
Abbreviations, Electrical Systems
(ES-1A, ES-1B, ES-1C) 413, 414, 415
Abutment, Excavation and Backfill (A62C)..... 18
Access Door, Bridge (B0-13) 239
Access Gate, Sound Wall
(B15-10 through B15-14) 300-304
Access Opening, Bridge Utility Detail (B7-11).. 265
Accessible Parking-Off-Street (A90A)..... 119
Accessible Parking-On-Street (A90B)..... 120
Acronyms and Abbreviations, General
(A10A, A10B) 1, 2
Anchor Assembly, End
(See Metal Beam Guard Railing)
Anchorage System, Cable
Pipe Downdrains (D87C) 172
Arch Culvert
Construction Load On (D88) 174
Endwalls, Reinforced Concrete (D86C) 169
Headwalls, Reinforced Concrete (D86C) 169
Warped Wingwalls,
Reinforced Concrete (D86C) 169
Asphalt Concrete Overside Drain (D87D)..... 173
Asphalt Concrete Paving (longitudinal
Tapered Notched Wedge Joint (P70)..... 134

-B-

Backfill and Excavation (A62A, A62B, A62C,
A62D, A62E, A62F)..... 16-22
Backfill, Permeable or Pervious,
Bridge (B0-3)..... 237
Balanced Lightweight Overhead Signs
(See Overhead Signs)
Banding of Conductor Ends (ES-13B) 479
Barricade, Portable (A73C) 27
Barbed Wire, Fence (A86)..... 114
Barriers
California ST-10 Bridge Rail (B11-68,
B11-69, B11-70) 284-286
California ST-30 Bridge Rail (B11-65)..... 281
California ST-40 Bridge Rail (B11-66,
B11-67) 282-283
Concrete,
Type 60 Series
(A76A through A76I)..... 29-37
Type 25 (B11-53)..... 271
Type 26 (B11-54)..... 272
Type 80 (B11-60, B11-61)..... 276, 277

Page No.

Barriers (Cont'd)
Type 80SW (B11-62, B11-63,
B11-64) 278-280
Type 732 (B11-55) 273
Type 736 (B11-56) 274
Type 742 (B11-57) 275
Wildlife Passage Way
(A76J, A76K, A76L) 38-40
Portable Concrete (Type 60K)
(A63A, A63B) 23, 24
Thrie Beam - (See Thrie Beam Barrier)
Bedding, Pipe and Pipe Arches
(A62D, A62DA, A62F) 19, 20, 22
Box Beam Overhead Signs - (See Overhead Signs)
Box Culverts - (See Culverts)
Box Girder
Details (B7-1).....259
Utility Opening (B7-10).....264
Bridge
Abutment, Excavation & Backfill (A62C)..... 18
Access Door, Bridge (B0-13).....239
Access Openings (B7-11) 265
Alternative Stirrups (B0-5).....238
Bumper, Temporary (B0-1).....236
Cast-In-Place Prestressed Girder
Details (B8-5) 266
Deck Construction Joints (B0-5).....238
Deck, Transverse Reinforcement (B0-5).....238
Drain Details, Types A, B, Area (B7-5).....260
Drain Types D-1 and D-2 (B7-6).....261
Drain Type D-3 (B7-7).....262
Electrical Details, Structure
Installations (ES-9A, ES-9B, ES-9C,
ES-9D, ES-9E, ES-9F) 468-473
Excavation and Backfill -
Limits of Payment (A62B, A62C)..... 17, 18
Girder, Reinforcement (B0-5).....238
Joint Seal Details (B6-21) 258
Polystyrene, Vertical and
Horizontal Protection of (B0-13).....239
Soffit Luminaire Installation
(ES-9E, ES-9F).....472, 473
Surcharge (A62B) 17
Temporary Bumper (B0-1).....236
Wall Expansion Joint (B0-3).....237
Waterstop (B0-1, B0-3).....236, 237
Weakened Plane Joint (B0-3).....237
Weep Hole (B0-3).....237

-C-

Cabinet, Controller, Details of
(ES-3A, ES-3B, ES-3C).....423-425

Cabinet, Telephone Demarcation
(ES-3D, ES-3E, ES-3F, ES-3G).....426-429
Cable Railing, Retaining Wall (B11-47)..... 268
Cantilever Flashing Beacon Details
(ES-7K, ES-7L)..... 461, 462
Cast-In-Drilled-Hole Concrete
Pile 400 mm and 610 mm (B2-3)..... 240
Cast-In-Drilled-Hole Concrete Pile
For Overhead Signs (See Overhead Signs)
Changeable Message Sign, Overhead Sign
Model 500 (S101 Through S116) 378-393
Model 510 (S120 Through S135) 394-409
Model 510 and 510
Gusset Plate Details (S142) 412
Safety Cable Anchorage (S141) 411
Walkway Safety Railing (S140)..... 410
Chain Link Fence (A85)..... 113
Chain Link Railing (B11-7) 267
Chain Link Railing Type 7 (B11-52) 270
Channelizers (A73C)..... 27
Closed Circuit Television
Foundation Details
High Mast Pole (ES-16C)..... 489
Pole Details (ES-16A, ES-16B) 487, 488
Communication Conduit In/On Bridges
(B14-3) 288
Concrete Barrier,
California ST-10 Bridge Rail (B11-68, B11-69,
B11-70).....284-286
California ST-30 Bridge Rail (B11-65), ... 281
California ST-40 Bridge Rail (B11-66,
B11-67)..... 282, 283
Portable (Type 60K)
(A63A, A63B) 23, 24
Type 25 (B11-53)..... 271
Type 26 (B11-54)..... 272
Type 60 Series (A76A through A76I).....29-37
Type 80 (B11-60, B11-61)..... 276, 277
Type 80SW (B11-62, B11-63,
B11-64).....278-280
Type 732 (B11-55)..... 273
Type 736 (B11-56)..... 274
Type 742 (B11-57)..... 275
Concrete Pavement
Jointed Plain (P1) 121
Jointed Plain-Wide Panel Details (P2)..... 122
Jointed Plain, Undoweled (P5)..... 123
Dowel Bar Retrofit in Existing
Pavement (P7) 124
Dowel Bar Details (P10) 125
Dowel Bar Basket Details (P12) 126
Tie Bar Details (P17) 127
Joint Details (P20)..... 129
Lane Schematics and Isolation
Joint Details (P18) 128
End Panel Pavement Transitions (P30)..... 130
Concrete Pavement (Cont'd)
Ramp Gore Area Paving Details (P35).....131
Drainage Inlet Details (P45, P46).....132, 133
Concrete Pile
400 mm and 610mm
Cast-In-Drilled-Hole (B2-3) 240
Class 400 and Class 625 (B2-5) 241
Class 900 (B2-8).....242
Load Test Pile
Details (B2-9, B2-10, B2-11)..... 243-245
Conduit, Installation Details
Bridge (B14-3, ES-9B).....288, 469
Construction Load on Culvert (D88).....174
Construction Project Funding Identification
Signs (T7).....217
Controller Cabinets, Details of
(ES-3A, ES-3B, ES-3C) 423-425
Corrugated Metal Pipe Coupling Band Details
Standard and Positive Joints
(D97A, D97B, D97C, D97D, D97E,
D97F, D97G)..... 183-189
Counterfort Retaining Walls
Type 3 (B3-5) 250
Type 4 (B3-6) 251
Coupling Band Details, Corrugated Metal Pipe
(D97A, D97B, D97C, D97D, D97E,
D97F, D97G)..... 183-189
Covers, Pipe Inlets (D75A, D75B).....152, 153
Crash Cushions
Sand Filled (Unidirectional) (A81A).....101
Sand Filled (Unidirectional) (A81B).....102
Sand Filled (Bidirectional) (A81C) 103
Sand Filled, Temporary (Unidirectional)
(T1A) 211
Sand Filled, Temporary (Bidirectional)
(T1B).....212
Sand Filled, Temporary (Shoulder
Installations) (T2).....213
Type (ADIEM) (A82B1).....105
Type (CAT) (A82A1).....104
Type (REACT 9CBB) (A82C1,
A82C2, A82C3) 106-108
Type (REACT 9SCBS) (A82D1,
A82D2, A82D3)..... 109-111
Type (REACT 62B060) (A82D4) 112
Crib Walls
Excavation and Backfill (A62B) 17
Reinforced Concrete
Types A, B, C, D, E, F
Construction Details (C7A, C7B,
C7C C7D, C7E)..... 135-139
Design Data (C7F, C7G).....140, 141
Steel
Construction Details (C8A) 142
Design Data (C8B, C8C) 143, 144

Crib Walls (Cont'd)
Timber Types A, B, C, D
Construction Details (C9A) 145
Design Data (C9B) 146
Cross Drain Interceptor Details (D99D) 197
Curbs and Driveways (A87A) 115
Curb Ramp Details and Island
Passage Way Details (A88A, A88B) .. 117, 118
Culvert
Box, Cast-In-Place Reinforced Concrete
General Details (D80, D81) 162, 163
Miscellaneous Details (D82) 164
Wingwalls
Types A, B, C (D84) 165
Types D and E (D85) 166
Warped (D86A) 167
Concrete Arch
Headwalls, Endwalls
and Warped Wingwalls (D86C) 169
Construction Load on (D88) 174
Excavation and Backfill Details
(A62D, A62DA, A62E, A62F) 19-22
Flared End Sections
Metal and Plastic (D94A) 181
Concrete (D94B) 182
Pipe
Headwalls and Endwalls
Straight and "L" (D89) 176
Headwalls, Endwalls and Wingwalls
Types A, B, C (D90) 177
Warped Wingwalls (D86B) 168

-D-

Debris Rack Cage (D93C) 180
Deck Drain Types A, B, Area (B7-5) 260
Deck Drain Types D-1 and D-2 (B7-6) 261
Deck Drain Types D-3 (B7-7) 262
Deck Drainage Details (B7-8) 263
Delineators (A73C) 27
Depressions, Gutter (D78A) 158
Detectors, Electrical Systems
(ES-5A, ES-5B, ES-5C, ES-5D) 436-439
Dikes, Asphalt Concrete (A87B) 116
Ditch Excavation (A62A) 16
Drains,
Downdrains, (D87A, D87B, D87C) 170-172
Grated Line (D98C) 193
Overside (D87D) 173
Pipe Riser Connections (D93A) 178
Retaining Wall (B3-9) 254
Slotted Corrugated Steel
Pipe (D98A, D98B) 191, 192
Underdrains (D102) 200
Drains, Bridge
Area (B7-5) 260
Type A (B7-5) 260
Type B (B7-5) 260
Type D-1 (B7-6) 261
Type D-2 (B7-6) 261
Type D-3 (B7-7) 262
Drainage Inlets
Concrete
Covers for Type OL and OS (D72) 147
Grate Details (D77A, D77B) 155, 156
Grate Frame Details
Typical Rectangular (D77A) 155
Type GDO Inlet (D74B) 150
Gutter Depressions (D78A) 158
Miscellaneous Details (D74C) 151
Riser Connection from Inlet to Crossdrain
General Details (D93B) 179
Riser Safety Cage (D93B) 179
Trash Racks (D74B) 150
Type G1 through G6 (D73) 148
Type GDO and GO (D74B) 150
Type GT1 through GT4 (D74A) 149
Type GOL, OL and OS (D72) 147
Pipe
Covers for Side Opening Inlets
(D75A, D75B) 152, 153
Grate and Frame Details (D77B) 156
Metal and Concrete
(D75A, D75B, D75C) 152-154
Trash Racks (D75C) 154
Pumping Installations (D75C) 154
Driveways (A87A) 115

-E-

Edge Drain Cleanout and Vent
Details (D99C) 196
Edge Drain Outlet and Vent
Details (D99B) 195
Electrical Systems, Abbreviations and Symbols
(ES-1A, ES-1B,
ES-1C) 413-415
Electrical Systems, Foundation
Installations (ES-11) 475
Electrical Systems, Service Installations
Details (ES-2A, ES-2B, ES-2C, ES-2D,
ES-2E, ES-2F, ES-2G) 416-422
Electrical Systems, Structure Installation Details
(ES-9A, ES-9B, ES-9C,
ES-9D, ES-9E, ES-9F) 468-473
Electrical Systems, Wiring Details and
Fuse Ratings (ES-13B) 479

End Caps,
Guard Railing (A77B1) 43
Thrie Beam Barrier (A78C1) 87
End Section, Flared (D94A, D94B) 181, 182
End Treatments, Guard Railing
(See Metal Beam Guard Railing)
End Treatments, Thrie Beam Barrier
(See Thrie Beam Barrier)
Entrance Taper, Downdrain (D87A,
D87B) 170, 171
Equipment Mountings, Electrical Systems
(ES-4A, ES-4B, ES-4C,
ES-4D, ES-4E) 431-435
Equipment Numbering, Electrical Systems
(ES-7B) 452
Excavation and Backfill
Bridge (A62B, A62C) 17, 18
Bridge Embankment Surcharge (A62B) 17
Crib Walls (A62B) 17
Ditch (A62A) 16
Headwalls, Pipe (A62A) 16
Miscellaneous (A62A) 16
Pipe and Culvert (A62D, A62DA,
A62E, A62F) 19-22
Retaining Walls (A62B) 17
Roadway (A62A) 16
Slope Protection (A62A) 16
Underdrains (D102) 200
Wingwalls (A62A) 16
Expansion Joint, Electrical Systems
Structure Electrical Conduit (ES-9B) 469
Extinguishable Message Sign
250 mm Letters (ES-14A) 480
Extinguishable Message Sign (ES-14B) 481
Extinguishable Message Sign and
Flashing Beacon (ES-14C) 482

-F-

Fence
Barbed Wire and Wire Mesh (A86) 114
Chain Link (A85) 113
Flared End Section (D94A, D94B) 181, 182
Flashing Beacon
Advance (ES-7J) 460
Cantilever (ES-7K, ES-7L) 461, 462
Extinguishable Message
Sign (ES-14C) 482
Flume Downdrain (D87D) 173
Fluorescent Sign Lighting
Equipment (ES-15B) 484
Fluorescent Lighting Fixture
Pedestrian Overcrossing (ES-12A) 476
Pedestrian Undercrossing (ES-12B) 477
Foundation, Electrical Systems
Location Details (ES-11) 475
Fuse Ratings, Electrical Systems (ES-13B) 479

-G-

Gabion Basket Details (D100A, D100B) 198, 199
Girder Details
Box (B7-1) 259
Prestressed, Cast-In-Place (B8-5) 266
T-Beam (B6-1) 257
Grate Details
Drainage Inlets
(D77A, D77B, D74B) 155, 156, 150
Retaining Wall Drains (B3-9) 254
Grounding, Service, Electrical Systems
(ES-2A) 416
Guard Railing - (See Metal Beam Guard Railing)
Gutter Depressions (D78A) 158
Gutter, Retaining Wall (B3-9) 254

-H-

Hand Railing, Bridge Tubular (B11-51) 269
Heads, Signal, Mounting and Details
(ES-4A, ES-4B, ES-4C,
ES-4D, ES-4E) 431-435
Headwalls (Endwalls, Wingwalls)
Arch Culvert Warped Wingwalls (D86C) 169
Box Culvert Wingwalls
Types A, B, C (D84) 165
Types D and E (D85) 166
Warped (D86A) 167
Pipe Culvert Wingwalls
Types A, B, C (D90) 177
Warped (D86B) 168
Pipe - Straight and "L" (D89) 176
Highway Post Marker (A73B) 26

-I-

Inlets, Drainage
Concrete
Covers for Type OL and OS (D72) 147
Grate Details (D77A, D77B) 155, 156
Grate Frame Details
Typical Rectangular (D77A) 155
Type GDO Inlet (D74B) 150
Gutter Depressions (D78A) 158
Miscellaneous Details (D74C) 151
Riser Connection from Inlet to Crossdrain
General Details (D93B) 179
Riser Safety Cage (D93B) 179
Trash Racks (D74B) 150
Type G1 through G6 (D73) 148
Type GDO and GO (D74B) 150
Type GT1 through GT4 (D74A) 149
Type GOL, OL and OS (D72) 147

Inlets, Drainage (Cont'd)
Pipe
Covers for Side Opening Inlets
(D75A, D75B)..... 152, 153
Grate and Frame Details (D77B)..... 156
Metal and Concrete (D75A,
D75B) 152, 153
Trash Racks (D75C)..... 154
Pumping Installations (D75C)..... 154
Inlet Depressions
Asphalt Concrete Shoulder (D78C)..... 160
Concrete Shoulders (D78B)..... 159
Inlet Structure
Grated Line Drain (D98C)..... 193
Slotted Drain Connection
(D98A, D98B)..... 191, 192
Irrigation and Planting
Abbreviations (H1) 201
Symbols (H2)..... 202
Details (H3 through, H9) 203-209
Controller Enclosure Cabinet (H10)..... 210
Irrigation Supply Line In/On
Bridges (B14-4, B14-5) 289, 290
Isolux Diagrams, Electrical Systems (ES-10)..... 474

-J-

Joints, Concrete Pavement
Joint Details (P20) 129
Lane Schematics and Isolation
Joint Details (P18)..... 128
Joints, Concrete Pipe (D97H) 190
Joints, Corrugated Metal
Pipe (D97A through D97G)..... 183-189
Joint Seal Details (B6-21)..... 258

-K-
(Blank)

-L-

Lane Closures, Stationary
Freeways and Expressways (T10) 218
Freeways and Expressways
Complete Closures (T10A) 219
Multilane Conventional
Highways (T11, T12)..... 220, 221
Ramp (T14)..... 223
Two Lane Conventional
Highways (T13) 222
Lane Closures, Moving
Multilane Highways (T15, T16)..... 224, 225
Two lane Highways (T17)..... 226
Layouts, Guard Railing
(See Metal Beam Guard Railing)
Left Turn Signal and Sign
Standard Type 33 (ES-7I) 459
Lighting Fixture
Fluorescent, Pedestrian
Overcrossing (ES-12A) 476
Fluorescent, Pedestrian
Undercrossing (ES-12B)..... 477
Lighting Standards
Foundation Location Details (ES-11) 475
Slip Base Insert for Type 15 (ES-6C) 442
Type 5 and Type 10 (ES-6K) 450
Types 15 and 21 (ES-6A)..... 440
Types 15 and 21, Barrier
Rail Mounted (ES-6B)..... 441
Types 15D and 21D
Double Luminaire Arm (ES-6D)..... 443
Types 30 and 31 (ES-6E) 444
Types 30 and 31, Base Plate
Details (ES-6F)..... 445
Type 32 (ES-6G)..... 446
Types 35 and 36-20A
10 Degree Type (ES-6H, ES-6I)..... 447, 448
Lightweight Overhead Sign
(See Overhead Signs)
Load Test Pile Details
(B2-9, B2-10, B2-11) 243-245
Loop Detectors (ES-5A, ES-5B, ES-5C,
ES-5D).....436-439
Luminaire, Isolux Diagrams (ES 10).....474
Luminaires Soffit, Bridge
(ES-9E, ES-9F) 472, 473

-M-

Manhole Frame and Cover, Bridge
Deck or Sidewalk (B7-11) 265
Markers (A73A, A73B).....25, 26
Markers, Pavement
(See Pavement Markers)
Markings, Pavement
(See Pavement Markings)
Message Sign, Extinguishable
250 mm Letters (ES-14A, ES-14B) 480, 481
Flashing Beacon (ES-14C).....482
Metal Beam Guard Railing
Connections to:
Abutments and Walls (A77J3).....76
Bridge Railings without Sidewalks
(A77J1, A77J2)).....74, 75
Bridge Sidewalks with Sidewalks
(A77K1, A77K2) 78, 79
Bridge Railings, Transition Railing
(Type WB) (A77J4) 77
Delineation, Typical (A77C4).....47
Diagrams, Placement (A77D1, A77D2)...48, 49
Dike Positioning Details (A77C4) 47

Metal Beam Guard Railing (Cont'd)
Embankment Widening for End
Treatments (See Typical Layouts)
End Anchors
Buried Post Anchor (A77I2) 73
End Anchor Assembly
(Type CA) (A77I1) 48
(Type SFT) (A77H1) 46
End Treatments
Flared Terminal System
(Type SRT) (A77L1) 80
(Type SKT) (A77L2) 81
In-Line Terminal System
(Type CAT) (A77L4)..... 83
(Type ET) (A77L3)..... 82
(Type FLEAT) (A77L5) 84
Layouts, Typical
Embankments (A77E1 through
A77E6).....50-55
Structure Approach (A77F1 through
A77F3).....56-58
Structure Departure (A77F4 and
A77F5)..... 59, 60
Fixed Objects
Between Separate Roadbeds
(Two-Way Traffic) (A77G1) 61
(One-Way Traffic) (A77G2) 62
Roadside (A77G3 through A77G8)...63-68
Line Post Installation,
Typical Embedment and
Hinge Point Offset Details (A77C3) 46
Placement Diagrams (A77D1, A77D2) ... 48, 49
Rail Tensioning Assembly (A77H2)..... 70
Standard Hardware (A77B1) 43
Standard Railing Section Installation
Steel Post with Notched Wood or
Notched Plastic Block (A77A2)..... 42
Standard Railing Section Installation
Wood Post with Wood Block (A77A1)..... 41
Steel Post, Notched Wood Block and
Notched Plastic Block Details (A77C2)..... 45
Wood Post and Wood Block Details
(A77C1)..... 44
Metal Marker Post (A73B)..... 26
Monuments, Survey (A74)..... 28

-O-

Object Markers (A73A) 25
Overhead Signs
Box Beam Closed Truss
Foundation (S60) 349
Ribbed Sheet Metal Details (S63)..... 352
Single Post Butterfly
Frame Details (S71) 360
Frame Juncture Details (S72)..... 361
Overhead Signs (Cont'd)
Single Post Butterfly (Cont'd)
Post Details (S73).....362
Single Post Cantilever
Frame Details (S68).....357
Frame Juncture Details (S69).....358
Post Details (S70).....359
Frame Members (S67).....356
General Frame Details (S62).....351
Two Post Type
Frame Details (S64).....353
Frame Juncture Details (S65).....354
Frame Members (S61).....350
General Frame Details (S62).....351
Post Details (S66).....355
Changeable Message
Model 500 (S101 Through S116).. 378-393
Model 510 (S120 Through S135).. 394-409
Model 510 and 510
Gusset Plate Details (S142).....412
Safety Cable Anchorage (S141).....411
Walkway Safety Railing (S140).....410
Lightweight Balanced - Single Steel Post
Connection Details
Type A (S43) 342
Type B (S44).....343
Type C (S45).....344
Foundation (S49).....348
Light Fixture Mounting
Details (S47) 346
Post Connection and Mounting
Details (S41, S42).....340, 341
Post Details (S48).....347
Sign Panel Mounting Details,
Laminated Panel, Type A (S46).....345
Tubular
Base Plate and Anchorage
Details (S35) 337
Foundation Details (S36).....338
Instructions and Examples (S30).....332
Single Post Type, Layout and
Pipe Selection (S31) 333
Structural Frame Details
(S33, S34) 335, 336
Two Post Types, Layout and
Pipe Selection (S32) 334
Truss
Frame Juncture Details (S13).....322
Gusset Plate Details (S6).....315
Instruction & Examples (S1).....310
Removable Sign Panel Frames
Overhead Formed Panel Mounting
Details (S21) 330
Removable Sign Panel Frames
2794 mm and 3048 mm Sign
Panels (S22) 331

Overhead Signs (Cont'd)
Truss (Cont'd)
Sign Mounting Panel Details
Laminated Panel, Type A (S19)..... 328
Single Post Type
Base Plate and Anchorage
Details (S3)..... 312
Foundations
Round Pedestal (S8) 317
Square Pedestal (S7)..... 316
Post Type II through IX (S2) 311
Structural Frame Members
(S4, S5)..... 313, 314
Two Post Type
Base Plate and Anchorage
Details (S10)..... 319
Foundations
Round Pedestal (S15) 324
Square Pedestal (S14)..... 323
Frame Juncture Details (S13)..... 322
Post Type I-S through VII-S (S9) 318
Structural Frame Details (S12)..... 321
Structural Frame Members (S11)..... 320
Walkway Details (S16, S17) 325, 326
Walkway Safety Railing Details (S18) 327
Overside Drains (D87D)..... 173

-P-

Panels, Sign
Overhead and Roadside Details
(S81 through S95) 363-377
Parking, Accessible -Off-Street (A90A)..... 119
Parking, Accessible -On-Street (A90B)..... 120
Pavement, Asphalt Concrete Paving (Longitudinal
Tapered Notched Wedge Joint (P70)..... 134
Pavement, Concrete
(See Concrete Pavement)
Pavement Markers and Traffic Lines
(A20A, A20B, A20C, A20D)..... 5-8
Pavement Markings-Arrows
(A24A, A24B) 9, 10
Pavement Markings-Symbols and Numerals
(A24C) 11
Pavement Markings-Words
(A24D) 12
Pavement Markings-Words and Crosswalks
(A24E) 13
Pedestrian
Barricade (ES-7P)..... 466
Overcrossing Fluorescent
Lighting Fixture (ES-12A)..... 476
Push Button (ES-5C) 438
Push Button Post (ES-7A) 451
Signals (ES-4B, ES-4C)..... 432, 433
Signs (ES-5C) 438
Pedestrian
Undercrossing Fluorescent
Lighting Fixture (ES-12B)..... 477
Permeable Backfill, Bridge (B0-3)..... 237
Pervious Backfill, Bridge (B0-3)..... 237
Photoelectric Control Unit
Extinguishable Message Sign and
Flashing Beacon (ES-14C) 482
Pole Top Details (ES-7N) 464
Pile, Concrete
400 mm and 610 mm
Cast-In-Drilled-Hole (B2-3) 240
Class 400 & 625 (B2-5) 241
Class 900 (B2-8) 242
Load Test Pile Details
(B2-9, B2-10, B2-11) 243-245
Pile Foundation, Overhead Signs
(S8, S9, S36, S37, S49,
S60) 317, 318, 338, 339, 348, 349
Pipe
Coupling Band Details, Corrugated
Metal Pipe (D97A, D97B, D97C,
D97D, D97E, D97F, D97G).....183-189
Culvert Headwalls,
Excavation and Backfill (A62A) 16
Downdrains (D87A, D87B, D87C).....170-172
Headwalls, Endwalls and Warped
Wingwalls (D86B)..... 168
Headwalls, Straight and "L" (D89) 176
Strut Details, Structural Steel
Plate (D88A)..... 175
Headwalls, Types A, B, C (D90) 177
Inlets
General Details (D75A, D75B,
D75C).....152-154
Covers for Side Opening Inlets
(D75A, A75B)..... 152, 153
Grate and Frame Details (D77B)..... 156
Metal and Concrete (D75A,
D75B)..... 152, 153
Trash Racks (D75C) 154
Pumping Installations (D75C) 154
Riser Connections (D93A, D93B) 178, 179
Riser with Debris Rack Cage (D93C) 180
Planting and Irrigation
Abbreviations (H1)..... 201
Symbols (H2) 202
Details (H3 through H9).....203-209
Controller Enclosure Cabinet (H10) 210
Polystyrene, Protection of, in Structures
(B0-13) 239
Portable Barricade (A73C)..... 27
Portland Cement Concrete Pavement
(See Concrete Pavement)

Post Anchorage Details, Bridge Railing
Chain Link (B11-7) 267
Tubular Hand (B11-51) 269
Precast Reinforced Concrete Pipe -
Direct Design Method (D79) 161
Prestressed Cast-In-Place Girder Details
(B8-5) 266
Protection of Polystyrene in Structures (B0-13) . 239
Pull Box Details (ES-8) 467
Pull Box, Structures (ES-9A, ES-9B, ES-9C,
ES-9D, ES-9E) 468- 472

-R-

Railing
Cable, Retaining Wall (B11-47) 268
Chain Link Type 7 (B11-52) 270
Barrier, Bridge
California ST-10 Bridge
Rail (B11-68, B11-69, B11-70) 284-286
California ST-30 Bridge
Rail (B11-65), ... 281
California ST-40 Bridge
Rail (B11-66, B11-67) 282, 283
Type 25 (B11-53) 271
Type 26 (B11-54) 272
Type 80 (B11-60, B11-61) 276, 277
Type 80SW (B11-62, B11-63,
B11-64) 278-280
Type 732 (B11-55) 273
Type 736 (B11-56) 274
Type 742 (B11-57) 275
Metal Beam Guard
(See Metal Beam Guard Railing)
Metal Tubular Bridge
Hand Railing (B11-51) 269
Temporary (Type K) (T3) 214
Ramp, Curb Details (A88A, A88B) 117, 118
Reinforced Concrete Crib Wall
(C7A, C7B, C7C C7D,
C7E, C7F, C7G) ..... 135 - 141
Reinforced Concrete Pipe, Precast
Direct Design Method (D79) 161
Retaining Walls
Cable Railing (B11-47) 268
Details (B3-8, B3-9) 253, 254
Excavation and Backfill
Limits of Payment (A62B) 17
Type 1, H= 1200 through
9100 mm (B3-1) 246
Type 1, H= 9700 through
10 900 mm (B3-2) 247
Type 1-A (B3-3) 248
Type 2 (B3-4) 249
Type 3 (B3-5) 250
Type 4 (B3-6) 251
Retaining Walls (Cont'd)
Type 5 (B3-7) 252
Type 6 - 1829 mm Max (B3-11) 255
Utility Opening (B3-9) 254
Riser
Connections
Crossdrains (D93A, D93B) 178, 179
Drainage Inlets (D93B) 179
Underdrain (D102) 200
Pipe With Debris Rack Cage (D93C) 180
Roadside Sign
Typical Installation Details (RS1,
RS2, RS3, RS4) 306-309
Mounting Hardware (RS4) 309
Panels (See Sign Panels)
Post and Pole Installation
Details (RS2, RS3) 307, 308
Rumble Strip Details, Shoulder
Rolled-In Indentations (A40A) 14
Ground-In Indentations (A40B) 15

-S-

Service Equipment, Signal and
Lighting (ES-2A, ES-2B, ES-2C, ES-2D,
ES-2E, ES-2F) 416-421
Shaped Bedding (A62D, A62DA, A62F) .. 19, 20, 22
Shoulder Rumble Strip Details,
Rolled-In Indentations (A40A) 14
Ground-In Indentations (A40B) 15
Sign, Extinguishable Message
(ES-14A, ES-14B, ES-14C) 480-482
Sign Illumination, Internally Illuminated
Street Name Sign (ES-7O) 465
Sign Lighting
Fluorescent Equipment (ES-15B) 484
Mercury Equipment (ES-15A) 483
Sign Lighting Control (ES-15D) 486
Sign Lighting Equipment (ES-15C) 485
Signal
Foundation Location Details (ES-11) 475
Heads and Mountings (ES-4A, ES-4B,
ES-4C, ES-4D, ES-4E) 431-435
Left Turn Standard, Type 33 (ES-7I) 459
Pedestrian Push Button Post
Details (ES-7A) 451
Pedestrian Push Buttons (ES-5C) 438
Standard
Arm Loading, 129 km/h
Wind Velocity (ES-7C, ES-7D,
ES-7E, ES-7F, ES-7G, ES-7H) 453-458
Sign
Construction Project Funding
Identification (T7) 217

Sign (Cont'd)
Roadside
Typical Installation Details
(RS1, RS2, RS3, RS4) 306-309
Mounting Hardware (RS4)..... 309
Post and Pole Installation
Details (RS2, RS3) 307, 308
Overhead (See Overhead Signs)
Panels
Overhead and Roadside Details
(S81 through S95)..... 363-377
Slip Base Insert for Type 15
Lighting Standards (ES-6C)..... 442
Slip Base Details, Type 30 and 31
Lighting Standards (ES-6F) 445
Slotted Corrugated Steel Pipe Drain
Details (D98A, D98B) 191, 192
Snow Pole Bracket (A73B)..... 26
Soffit Luminaires, Bridge (ES-9E, ES-9F) . 472, 473
Sound Walls
Masonary Block
Access Gate
(B15-10 through B15-14) 300-304
On Footing (B15-1, B15-2)..... 291, 292
On Pile Cap (B15-3, B15-4, B15-5).. 293-295
On Type 736S/SV Barrier
(B15-6, B15-7, B15-8) 296-298
On Type 736S/SV Barrier on Pile Footing
For Spanning Utilities (B15-15) 305
Miscellaneous Details (B15-9)..... 299
Sprinkler Conduit In/On
Bridges (B14-3) 288
Standard
Lighting
High Mast Light Pole (ES-6J)..... 449
Foundation Location Details (ES-11) 475
Slip Base Insert for Type 15 (ES-6C) 442
Type 5 and Type10 (ES-6K)..... 450
Types 15and 21 (ES-6A)..... 440
Types 15 and 21, Barrier
Rail Mounted (ES-6B)..... 441
Types 15D and 21D
Double Luminaire Arm (ES-6D) 443
Types 15TS (ES-7A)..... 451
Types 30 and 31 (ES-6E) 444
Types 30 and 31 Slip Base
Base Plate Details (ES-6F) 445
Type 32 (ES-6G)..... 446
Types 35 and 36-20A, 10 Degree Type
(ES-6H, ES-6I)..... 447, 448
Traffic Signal and Lighting
Arm Loading, 129 km/h
Wind Velocity (ES-7C, ES-7D,
ES-7E ES-7F, ES-7G,
ES-7H)..... 453-458
Standard (Cont'd)
Traffic Signal and Lighting (Cont'd)
Cantilever Advance Flashing
Beacon Installation Types 9, 9A,
9B, (ES-7K, ES-7L) 461, 462
Left Turn Signal and Sign,
Type 33 (ES-7I) 459
Miscellaneous Details
(ES-7M, ES-7N) 463, 464
Push Button Post (ES-7A) 451
Type I Standard and Equipment
Numbering (ES-7B) 452
Type 40-0-129 (ES-7J) 460
Steel Crib Wall
Construction Details (C8A)..... 142
Design Data (C8B, C8C)..... 143, 144
Excavation and Backfill (A62B) 17
Stirrups, Alternative (B0-5)..... 238
Structural Section Drainage System
Details (D99A)..... 194
Structural Steel Plate
Vehicular Undercrossings (B14-1)..... 287
Excavation & Backfill (A62F) 22
Structure Installations,
Electrical Details (ES-9A, ES-9B,
ES-9C, ES-9D, ES-9E, ES-9F).....468-473
Strut Details for Structural Plate Pipes, Arches and
Vehicular Undercrossings (D88A)..... 175
Supply Line In/On Bridges (B14-4, B14-5) 289, 290
Surcharge, Bridge Embankment (A62B) 17
Survey Monuments (A74)..... 28
Symbols, General
(A10C, A10D)..... 3, 4
Symbols, Planting and Irrigation (H2) 202
Symbols, Electrical Systems
(ES-1A, ES-1B, ES-1C).....413-415

-T-

T-Beam
Details (B6-1)..... 256
Utility Openings (B6-10) 257
Tapered Inlets, Overside Drains (D87D) 173
Terminal Compartment (ES-4D, ES-4E)..... 434, 435
Terminal System End Treatments
(See Metal Beam Guard Railing)
Temporary Bumpers, Bridge (B0-1) 236
Temporary Crash Cushion, Sand Filled
(T1A, T1B, T2) 211-213
Temporary Railing (Type K) (T3)..... 214
Temporary Terminal Section (Type K) (T5)..... 216
Temporary Traffic Screen (T4) 215
Temporary Water Pollution Control Details
(T51 through T59) 227-235

Thrie Beam Barrier
Connections to:
Abutments and Walls (A78G) 96
Bridge Railings without Sidewalks
(A78F1, A78F2)..... 94, 95
Bridge Railings, Transition Railing
(Type STB) (A78J) 99
Bridge Railings, Transition Railing
(Type DTB) (A78K) 100
Bridge Railing, Typical Layout
(A78H)..... 97
Concrete Barrier (A78I) 98
Emergency Passageway (A78E2) 92
End Anchors and End Treatment
Anchor Assembly (A78E1, A78E2)..... 91, 92
Crash Cushion (A78E3) 93
Terminal System (A78E1)..... 91
Fixed Objects in Median (A78D1)..... 89
On Bridge (A78D2) 90
Thrie Beam Barrier (Cont'd)
Post and Block Details (A78C2)..... 88
Standard Hardware (A78C1) 87
Standard Railing Section Installation
Steel Post with Notched Wood or
Notched Plastic Block (A78B) 86
Standard Railing Section Installation
Wood Post with Wood Block (A78A)..... 85
Timber Crib Wall
Construction Details
Types A, B, C and D (C9A) 145
Design Data (C9B)..... 146
Excavation and Backfill (A62B)..... 17
Traffic Control System
Lane Closure on Freeways
and Expressways (T10)..... 218
Lane and Complete Closures on
Freeways and Expressways (T10A)..... 219
Lane Closure on Multilane
Conventional Highways (T11)..... 220
Lane Closure on Multilane
Conventional Highways (T12)..... 221
Lane Closure on Two Lane
Conventional Highways (T13)..... 222
Moving Lane Closure on Multilane
Highways (T15, T16)..... 224, 225
Moving Lane Closure on Two Lane
Highways (T17) 226
Ramp Closures (T14) 223
Traffic Lines and Pavement
Markers (A20A, A20B, A20C, A20D).....5-8
Traffic Signal and Highway Lighting
Installation Details
(ES-7M, ES-7N)..... 463, 464
Traffic Signal and Lighting Standards
(See Standards)
Trash Rack, Drainage and Pipe Inlets
(D74B, D75C) 150, 154
Tubular Hand Railing (B11-51) 269
Tubular Overhead Signs (See Overhead Signs)

-U-

Underdrains
Typical Details (D102) 200
Excavation and Backfill (D102).....200
Risers (D102) 200
Utilities Details (B7-11) 265
Utility Access Door (B0-13).....239
Utility Access Opening (B7-11) 265
Utility Opening - Box Girder (B7-10).....264

-V-

Vehicle Detectors, Electrical Systems
Loop (ES-5A, ES-5B, ES-5C)..... 436-438
Magnetic (ES-5C).....438
Magnetometer (ES-5D) 439
Vehicular Undercrossing
Structural Steel Plate (B14-1).....287

-W-

Wall Expansion Joint, Bridge
(B0-3) 237
Warped Wingwalls
Arch Culvert (D86C).....169
Box Culvert (D86A).....167
Excavation and Backfill (A62A).....16
Pipe Culvert (D86B).....168
Waterstop, Bridge (B0-1, B0-3) 236, 237
Water Pollution Control, Temporary
(See Temporary Water Pollution Control Details)
Weakened Plane Joint, Bridge (B0-3) 237
Weep Hole, Bridge (B0-3).....237
Wingwalls
Arch Culverts (D86C) 169
Box Culverts
Diaphragm Abutment, Bridge (B0-1) 236
Excavation and Backfill (A62A) 16
Pipe Culvert (D86B, D90).....168, 177
Types A, B, C (D84).....165
Types D and E (D85).....166
Warped (D86A, D86B, D86C)..... 167-169
Wiring and Splicing Details,
Electrical (ES-13A, ES-13B).....478, 479
Wiring Diagram Flashing Beacon
Control Assembly (ES-3B).....424
Wire Mesh Fence (A86) 114