STATE OF CALIFORNIA-BUSINESS, TRANSPORTATION AND HOUSING AGENCY PETE WILSON, Governor

DEPARTMENT OF TRANSPORTATION
ESC/OE
1727 30TH STREET, 2ND FLOOR
SACRAMENTO, CA 95816

TDD (916) 654-4014

Errata No. 97-1

TO: All holders of the **July 1997 edition of the Standard Plans Book**

FROM: Engineering Service Center-Office of Office Engineer

SUBJECT: Errata

DATE: December 30, 1997

The attached Revised Standard Plans (RSPs) and New Standard Plans (NSPs) dated December 4, 1997 contain revisions and additions to the July 1997 edition of the Standard Plans Book.

Revised Standard Plans (RSPs) are to replace the comparable sheets in the July 1997 edition of the book. New Standard Plans (NSPs) are to supplement the July 1997 edition of the book.

The revisions or additions to the attached Revised Standard Plans (RSPs) and New Standard Plans (NSPs) are:

RSP A76A, "Concrete Barrier Type 60", and RSP A76G, " Concrete Barrier Type 60S", revises the details for Concrete Barrier Type 60C on RSP A76A and for Concrete Barrier Type 60SC on RSP A76G to show the dimension line on the left side of the barrier to terminate at the bottom of the barrier instead of the bottom of the pavement or base beneath the barrier.

RSP A77C, "Metal beam Guard Railing-Posts and Blocks", revises the titles for the details of the Douglas fir posts and blocks to conform to the correct size post and block identification.

RSP C7E, revises Note 2 to correct the equations for the backfill soil parameters.
RSP C7F, RSP C7G, RSP C8C, and RSP C9B, revises the design loading surcharge factor from 40 kPa to 11.5 kPa.

NSP D75A, NSP D75B, and NSP D75C replaces Standard Plan D75, "Pipe Inlet". The details for pipe inlets have been reconfigured on three new plans sheets to improve clarity of details and to revise incorrect detail titles.

RSP D77A, "Grate Details", revises the title of the tables in the lower left portion of the plan to read: "Basis for Misc Iron and Steel Final Pay Masses for Drainage Inlets".

RSP D85, "Box Culvert Wingwall Types D and E", revises the dimension for the depth of the cutoff wall to 1.2 m in the "end elevation detail" of the Type "E" Stepped Wingwall (Single Box Culvert).

RSP H2, "Planting and Irrigation Symbols", revises the formatting for the existing facilities symbols.

RSP B3-1, "Retaining Wall Type 1- H = 1200 mm Through 9100 mm", revises the bar reinforcing steel spacing to 300 mm for the H = 4200 mm wall.

RSP B3-3, RSP B3-7, RSP B3-8, revises the design loading surcharge factor from 40 kPa to 11.5 kPa.

RSP S4, "Overhead Signs-Truss Single Post Type- Structural Frame Members", revises the dimensions of the walkway bracket and those dimensions shown in Note 6.

RSP ES-6J, "Signal and Lighting Standards-Case 1 Arm Loading- Wind Velocity = 113 km/h-Arm Lengths 4.6 m to 9.1 m", revises the arm notation on the elevation drawing for the Type 16-1-113 and Type 18-1-113 Standards.

RSP ES-6R, "Signal and Lighting Standards-Case 4 Arm Loading- Wind Velocity = 129 km/h-Arm Lengths 7.6 m to 13.7 m ", revises the sheet to include the pole thickness in the Pole Data Table.

RSP ES-34A, "Closed Circuit Television-Pole Details", revises the "C" dimension of the Base Plate for the Post Types CCTV 40 and CCTV 45.

In addition to the attached 8-1/2" x 11" copies of the above listed Revised Standard Plans (RSPs) and New Standard Plan (NSPs), also attached is a list of new and revised standard plans issued subsequent to the publication of the July, 1997 Metric Standard Plans Book and the latest revised Standard Plans List for use with the July, 1997 metric edition of the Standard Plans Book.

The July 1997 Standard Plans and the herein listed Revised and New Standard Plans (without signature and registration seal information) are available for electronic access by:

- Caltrans personnel via the Caltrans Internal Net from the following new location:
  /net/trws004/drv4/stdplans/metric/97/details
- The world via the Caltrans OE-ESC Internet WEB site from the following location:
  http: //www.dot.ca.gov/hq/esc/projplan/ppintro.htm

Hard (non-electronic) copies of the July 1997 Standard Plans and the herein listed Revised and New Standard Plans are available through a vendor for a fee at the following address:

Winslow Repro/Graphics, 2337 Lexington Street, Sacramento, CA 95815
Telephone: (916) 921-9311 FAX: (916) 921-2470

John Gizinos
ESC/OE

STATE OF CALIFORNIA
DEPARTMENT OF TRANSPORTATION

Date: December 30, 1997

JULY 1997 STANDARD PLANS BOOK

NEW STANDARD PLANS (NSP) AND REVISED STANDARD PLANS (RSP) ISSUED SUBSEQUENT TO THE PUBLICATION OF THE JULY 1997 METRIC STANDARD PLANS BOOK

PLAN NO.	PLAN TITLE	DATED	ISSUED BY ERRATA No.
RSP A76A	Concrete Barrier Type 60	12-04-97	97-1
RSP A76G	Concrete Barrier Type 60S	12-04-97	97-1
RSP A77C	Metal Beam Guard Railing-Posts and Blocks	12-04-97	97-1
RSP C7E	Reinforced Concrete Crib Wall-Types A, B, C, D, E, and F - Header and Stretcher Details	12-04-97	97-1
RSP C7F	Design Data For Reinforced Concrete Crib Wall Foundation Pressure-Battered Wall	12-04-97	97-1
RSP C7G	Reinforced Concrete Crib Wall Foundation Pressure-Vertical Wall	12-04-97	97-1
RSP C8C	Steel Crib Wall-Design Data	12-04-97	97-1
RSP C9B	Timber Crib Wall-Types A, B, C, and D Design Data	12-04-97	97-1
NSP D75A	Pipe Inlets	12-04-97	97-1
NSP D75B	Pipe Inlets	12-04-97	97-1
NSP D75C	Pipe Inlets-Ladder, Step and Trash Rack Details	12-04-97	97-1
RSP D77A	Grate Details	12-04-97	97-1
RSP D85	Box Culvert Wingwalls-Types D and E	12-04-97	97-1
RSP H2	Planting and Irrigation Symbols	12-04-97	97-1
RSP B3-1	Retaining Wall Type 1- H=1200 mm through 9100 mm	12-04-97	97-1
RSP B3-3	Retaining Wall Type 1A	12-04-97	97-1
RSP B3-7	Retaining Wall Type 5	12-04-97	97-1

John Gizinos/ESC-OE

STATE OF CALIFORNIA
DEPARTMENT OF TRANSPORTATION

Date: December 30, 1997

JULY 1997 STANDARD PLANS BOOK

NEW STANDARD PLANS (NSP) AND REVISED STANDARD PLANS (RSP) ISSUED SUBSEQUENT TO THE PUBLICATION OF THE JULY 1997 METRIC STANDARD PLANS BOOK

(CONT'D)

PLAN NO.	PLAN TITLE	DATED	ISSUED BY ERRATA No.
RSP B3-8	Retaining Wall Details No. 1	12-04-97	97-1
RSP S4	Overhead Signs-Truss Single Post Type Structural Frame Members	12-04-97	97-1
RSP ES-6J	Signal and Lighting Standards-Case 1 Arm Loading- Wind Velocity = 113 km/h-Arm Lengths 4.6 m to 9.1 m	12-04-97	97-1
RSP ES-6R	Signal and Lighting Standards-Case 4 Arm Loading- Wind Velocity = 129 km/h-Arm Lengths 7.6 m to 13.7 m	12-04-97	97-1
RSP ES-34A	Closed Circuit Television-Pole Details	12-04-97	97-1

John Gizinos/ESC-OE

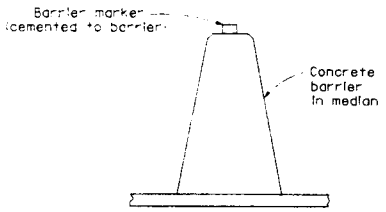

CONCRETE BARRIER TYPE 60 DELINEATION

See Notes 7 and 8

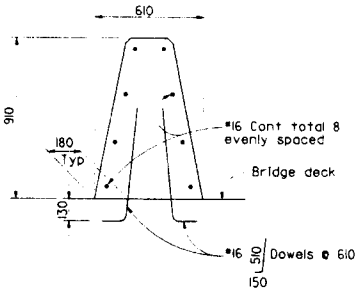

CONCRETE BARRIER TYPE 60A

Details similar to Type 60 except as noted.

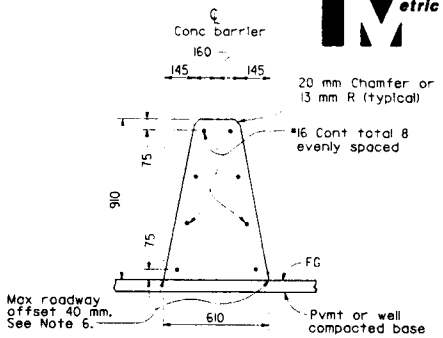

CONCRETE BARRIER TYPE 60

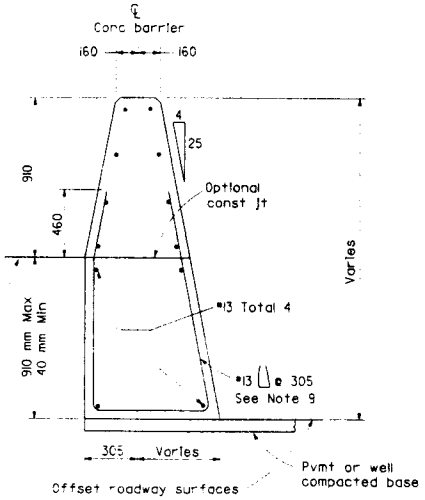

CONCRETE BARRIER TYPE 60C

Details similar to Type 60 except as noted.
Concrete barrier end anchor when necessary.

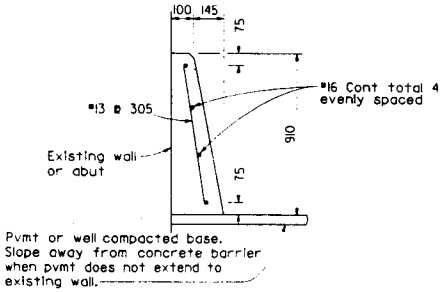

CONCRETE BARRIER TYPE 60D

NOTES

1. See Standard Plan A76B for details of Concrete Barrier Type 60 end anchors, connection to structures and transitions to Concrete Barrier Type 50 and Concrete Barrier Type 60S.
2. See Standard Plan A76C for Concrete Barrier Type 60 transitions at bridge column and sign pedestals.
3. Where glare screen is required on Concrete Barrier Type 60, use Concrete Barrier Type 60G.
4. Where the concrete barrier is added to the face of existing concrete structure, match existing weep holes.
5. Expansion joints in concrete barrier shall be located at all deck, pavement and principal wall joints. Expansion joint filler material shall be the same size as joint or 13 mm minimum.
6. Where roadway offset is greater than 40 mm, see Concrete Barrier Type 60C.
7. Barrier delineation to be used when required by the Special Provisions.
8. Spacing of barrier markers to match spacing of raised pavement markers on the adjacent median edgeline pavement delineation.
9. Reinforcing stirrup not required for roadway offsets less than 305 mm.

Caltrans Metric

December 4, 1997
PLANS APPROVAL DATE

Ellis K. Hirst
C17926
6-30-01

To accompany plans dated _____

STATE OF CALIFORNIA
DEPARTMENT OF TRANSPORTATION

CONCRETE BARRIER TYPE 60

NO SCALE

ALL DIMENSIONS ARE IN
MILLIMETERS UNLESS OTHERWISE SHOWN

RSP A76A DATED DECEMBER 4, 1997 SUPERSEDES STANDARD PLAN A76A
DATED JULY 1, 1997-PAGE 27 OF THE STANDARD PLANS BOOK DATED JULY 1997.

REVISED STANDARD PLAN RSP A76A

STD. PLAN RSP A76A

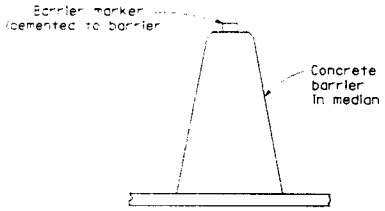

CONCRETE BARRIER TYPE 60S DELINEATION

See Notes 7 and 8

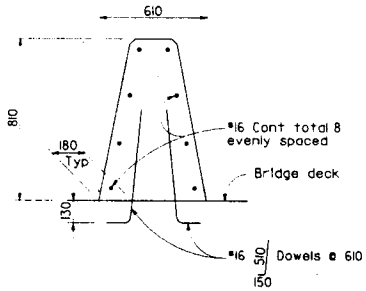

CONCRETE BARRIER TYPE 60SA

Details similar to Type 60S except as noted.

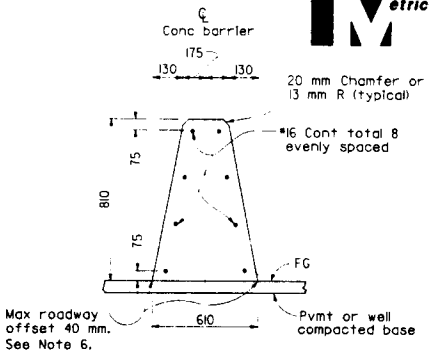

CONCRETE BARRIER TYPE 60S

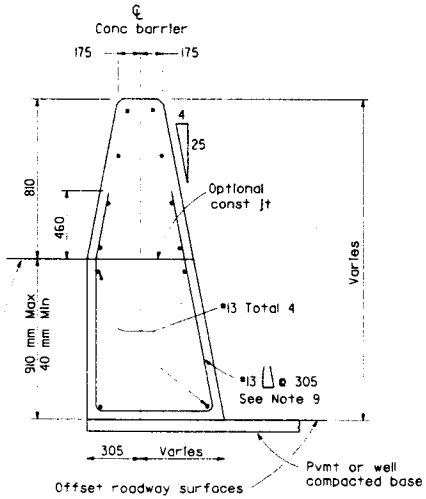

CONCRETE BARRIER TYPE 60SC

Details similar to Type 60S except as noted.
Concrete barrier end anchor when necessary.

NOTES

1. See Standard Plan A76H for details of Concrete Barrier Type 60S end anchors, connection to structures and transitions to Concrete Barrier Type 50.
2. See Standard Plan A76I for Concrete Barrier Type 60S transitions at bridge column and sign pedestals.
3. Where glare screen is required on top of concrete barrier, use Concrete Barrier Type 60G.
4. Where the concrete barrier is added to the face of existing concrete structure, match existing weep holes.
5. Expansion joints in concrete barrier shall be located at all deck, pavement and principal wall joints. Expansion joint filler material shall be the same size as joint or 13 mm minimum.
6. Where roadway offset is greater than 40 mm, see Concrete Barrier Type 60SC.
7. Barrier delineation to be used when required by the Special Provisions.
8. Spacing of barrier markers to match spacing of raised pavement markers on the adjacent median edgeline pavement delineation.
9. Reinforcing stirrup not required for roadway offsets less than 305 mm.

Caltrans Metric

December 4, 1997
PLANS APPROVAL DATE

Ellis K. Hirst
No. C17926
Exp. 6-30-01
STATE OF CALIFORNIA

To accompany plans dated _____

STATE OF CALIFORNIA
DEPARTMENT OF TRANSPORTATION

CONCRETE BARRIER TYPE 60S

NO SCALE

ALL DIMENSIONS ARE IN
MILLIMETERS UNLESS OTHERWISE SHOWN

RSP A76G DATED DECEMBER 4, 1997 SUPERSEDES STANDARD PLAN A76G
DATED JULY 1, 1997-PAGE 33 OF THE STANDARD PLANS BOOK DATED JULY 1997.

REVISED STANDARD PLAN RSP A76G

STD. PLAN RSP A76G

NOTES

1. All holes in wood posts and blocks shall be 20 mm dia ± 1.6 mm.
2. All holes in steel posts and blocks shall be 21 mm dia maximum.
3. Contractor may submit alternative steel post details for Engineer's approval.
4. Dimensions shown for wood post are nominal.

Caltrans Metric

December 4, 1997

To accompany plans dated _____

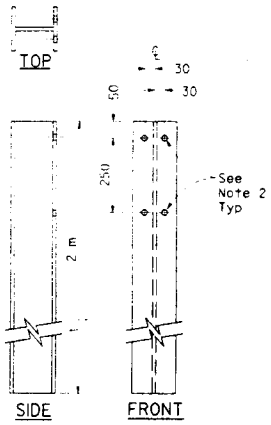

MW 150 x 22 STEEL POST

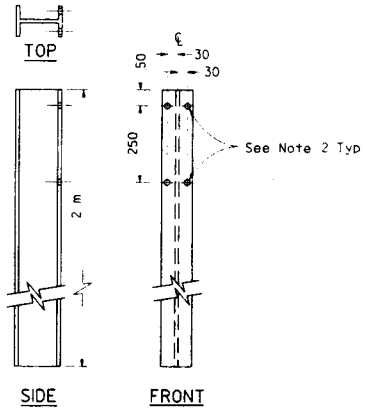

MW 150 x 14 STEEL POST

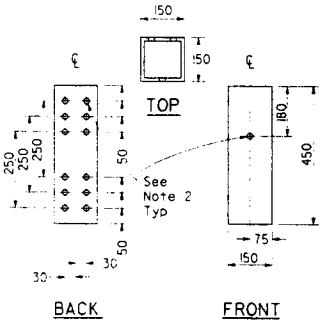

150 mm x 150 mm x 450 mm
(4.8 mm THICK)
NOMINAL DIMENSIONS
TUBULAR STEEL BLOCK

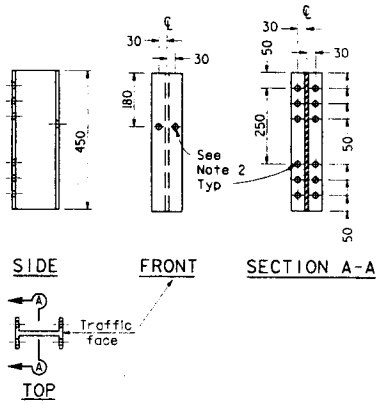

MW 150 X 14 STEEL BLOCK

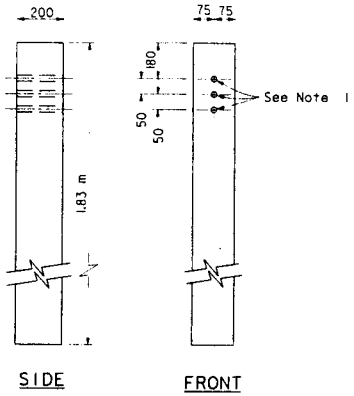

150 mm x 200 mm
DOUGLAS FIR POST

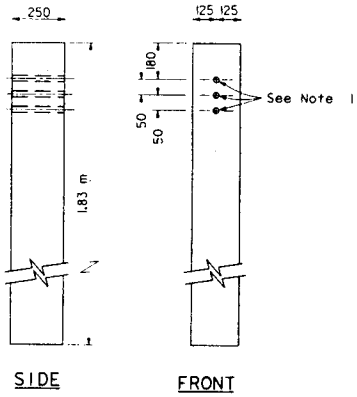

250 mm x 250 mm
DOUGLAS FIR POST

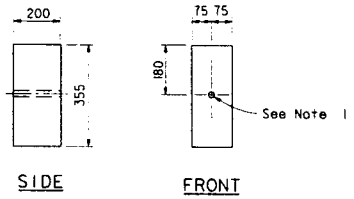

150 mm x 200 mm
DOUGLAS FIR BLOCK

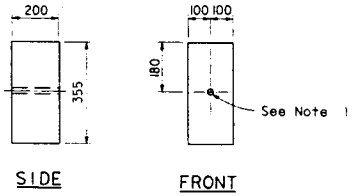

200 mm x 200 mm
DOUGLAS FIR BLOCK

STATE OF CALIFORNIA
DEPARTMENT OF TRANSPORTATION

METAL BEAM GUARD RAILING POSTS AND BLOCKS

NO SCALE

ALL DIMENSIONS ARE IN MILLIMETERS UNLESS OTHERWISE SHOWN

RSP A77C DATED DECEMBER 4, 1997 SUPERSEDES STANDARD PLAN A77C DATED JULY 1, 1997-PAGE 38 OF THE STANDARD PLANS BOOK DATED JULY 1997.

REVISED STANDARD PLAN RSP A77C

STD. PLAN RSP A77C

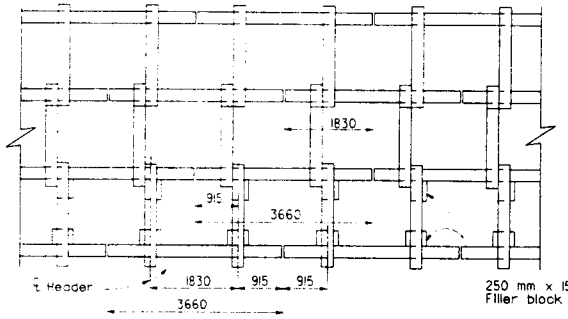

PARTIAL PLAN AT BASE

TYPE "D" SHOWN, OTHERS SIMILAR

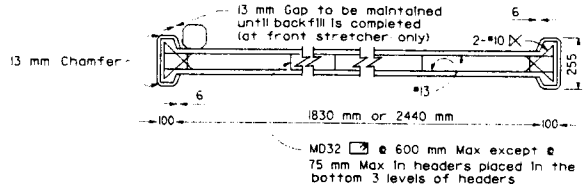

ELEVATION

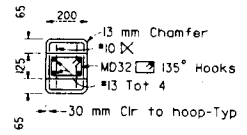

SECTION

HEADER DETAIL

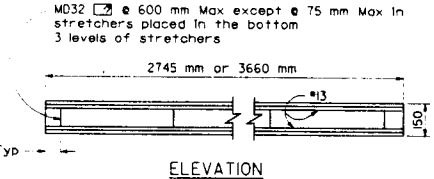

ELEVATION

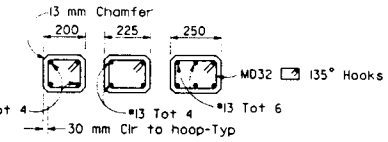

SECTION

STRETCHER DETAIL

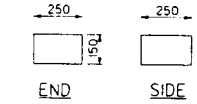

FILLER BLOCK DETAIL

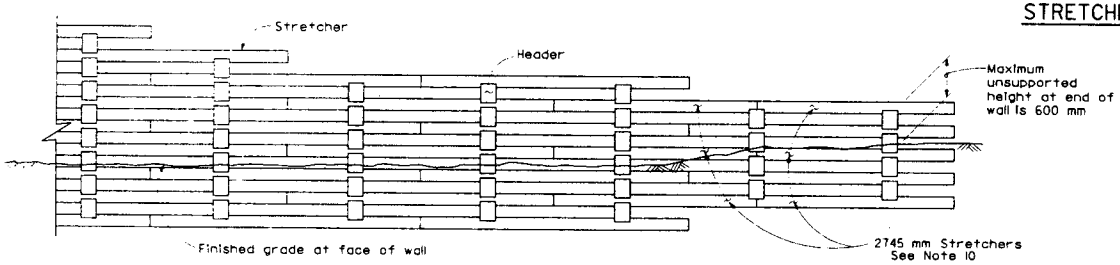

PARTIAL ELEVATION

GENERAL NOTES

1. Reinforced Concrete:
   Concrete - f'c = 25 MPa
   Bar Reinforcement - fy = 420 MPa
   Deformed Wire - fy = 450 MPa
2. Soil Parameters:
   Backfill - $\Phi = 34°$
   $\delta = 22.7°$
   $\gamma = 19\ kN/m^3$
   Foundation - $\Phi = 34°$
   Lateral earth pressure determined by Coulomb's theory.
3. Concrete to concrete bearing surfaces shall be finished to a smooth plane. The gap between bearing surfaces shall not exceed 3 millimeters. Where a gap of 1.5 millimeters to 3.0 millimeters exists, a 1.5 millimeters pad of asphalt felt or sheet neoprene shall be placed between the bearing surfaces. For wall Types D, E, and F, a 1.5 millimeters asphalt felt pad or sheet neoprene shall be placed between all concrete bearing surfaces below the 8950 millimeters level.
4. All members may be manufactured to dimensions 4 millimeters greater in thickness and stretchers 13 millimeters less in length.
5. Where an opening is specified in the face of a wall, special length stretchers and additional headers may be required.
6. For non-tangent wall alignment, special length stretchers may be required.
7. For non-tangent wall alignment and at locations where filler blocks are required, special length front face closure members may be required.
8. The thickness of the lowest step for each wall type shall not be less than the dimension shown on these plans.
9. Use of "Front Face Closure Member" shall be required only when specified on project plans or in the Special Provisions.
10. All stretchers are 3660 millimeters except as noted.

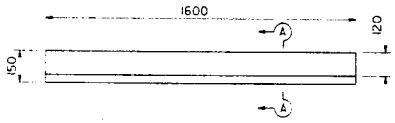

ELEVATION

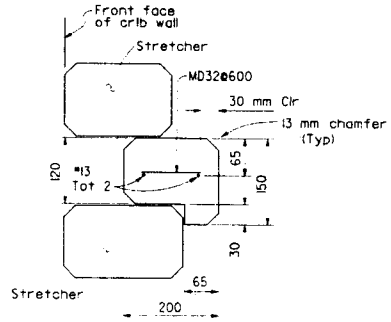

SECTION A-A

FRONT FACE CLOSURE MEMBER

STATE OF CALIFORNIA
DEPARTMENT OF TRANSPORTATION

REINFORCED CONCRETE CRIB WALL TYPES A, B, C, D, E AND F HEADER AND STRETCHER DETAILS

NO SCALE

ALL DIMENSIONS ARE IN MILLIMETERS UNLESS OTHERWISE SHOWN

RSP C7E DATED DECEMBER 4, 1997 SUPERSEDES STANDARD PLAN C7E DATED JULY 1, 1997-PAGE 68 OF THE STANDARD PLANS BOOK DATED JULY 1997.

REVISED STANDARD PLAN RSP C7E

Collins Metric

James C. Moser
December 4, 1997
PLAN APPROVAL DATE

James C. Moser
C16576
6-30-01

To accompany plans dated _____

STD. PLAN RSP C7E

FOUNDATION PRESSURE-BATTERED WALL

(kPa)

TYPE	LOADING CASE	WALL HEIGHT 425	700	975	1250	1525	1800	2075	2350	2625	2900	3175	3450	3725	4000	4275	4550	4825	5100	5375	5650	5925	6200	6475	6750	7025	7300	7575	7850	8125
A	I II III	35* 40* 45*	40* 45* 50*	50* 50* 50*	55* 60* 55*	60* 65* 55*	65* 70* 65	70* 75* 80	70* 75* 100	70* 75* 125	75 75* 155	90 85	110 100	130 120	150 140	175 165														
B	I II III									65* 65 105	70 80 125	80 90 150	90 105 175	105 120	120 135	130 155	145 170	165 190	180 215	205 240	225	250									
C	I II III											75* 90* 110*	85 85 120	95 100 140	105 115 160	110 125 185	120 135 205	130 150 230	140 165 260	155 180 290	165 195	180 215	195 230	210 250	225 270	245 295	265 320	285 345	305	325
D	I II III																105 125* 180*	115 120* 165*	120 130 170	130 140 190	140 155 210	150 170 235	160 185 255	170 200 280	180 210 305	190 225 330	200 240 355	210 255 385	220 275 415	235 290
E	I II III																						140 170* 250*	145 165* 235*	155 170 220*	165 180 240	175 195 260	185 210 280	195 220 300	205 235 325
F	I II III																													180 200* 290*

TYPE	LOADING CASE	8400	8675	8950	9225	9500	9775	10050	10325	10600	10875	11150	11425	11700	11975	12250	12525	12800	13075	13350	13625	13900	14175	14450	14725	15000	15275	15550	15825	16100
A	I II III																													
B	I II III																													
C	I II III	350																												
D	I II III	245 310	260 325	270 345	285 365	300 385	315 410	330 430	350 455	365	385	405	425	445	470	490														
E	I II III	215 250 350	225 270 375	235 285 400	250 300 425	260 315 450	270 330 480	280 350 505	290 365 535	300 380 565	315 400	325 420	340 435	350 455	365 475	375 500	390 520	405 540	420 565	440	455	470	490	505	525	545	565	585	610	630
F	I II III	190 210 280*	200 225 290	210 235 310	220 250 330	230 265 350	240 280 375	250 290 395	260 305 420	270 320 445	280 340 470	290 355 495	305 370 520	315 390 545	325 405 575	335 420 600	345 435 630	355 455 660	365 470 690	380 490	390 510	400 525	415 545	425 565	440 585	455 610	470 630	480 650	495 675	510

* Indicates pressure at heel

▌ Heavy vertical line indicates maximum allowable wall height for particular wall type and particular loading case.

DESIGN EXAMPLES

Example No. 1:

Given: Wall height 6100 mm
1:2 cut slope to be retained. Foundation site investigation indicates lateral pressure from material above will be equivalent to design loading case II condition and an allowable soil bearing capacity of 240 kPa.

Select: Battered Type C or Type D wall. Actual H = 6200 mm. Type D vertical wall can be used by increasing the allowable bearing capacity of the original ground.

Example No. 2:

Given: Wall height 2750 mm
Design Loading Case I (600 mm level ground surcharge plus 11.5 kPa of surcharge) to be retained. Base founded in embankment.

Select: Battered or Vertical Type A or Type B wall. Actual H = 2900 mm.

Example No. 3:

Given: Wall height 3050 mm
Design Loading Case III (1:1.5 embankment slope) to be retained. Base in original ground, sloping away from toe of wall at 1:3. Foundation investigation determines the allowable soil bearing capacity is 190 kPa (considering the sloping ground in front of wall).

Select: Battered Type B or Type C wall or Vertical Type C wall. Actual H = 3175 mm.

Example No. 4:

Given: Wall height 9150 mm
Design Loading Case II (1:2 embankment slope) to be retained.
Base in embankment (1525 mm depth minimum).

Select: Battered Type D, Type E or Type F wall or Vertical Type F wall. Actual H = 9225 mm. For all types the foundation pressure is between 240 and 385 kPa. Embankment material below the wall must be "Structure Backfill" (See Design Example Footnote 1).

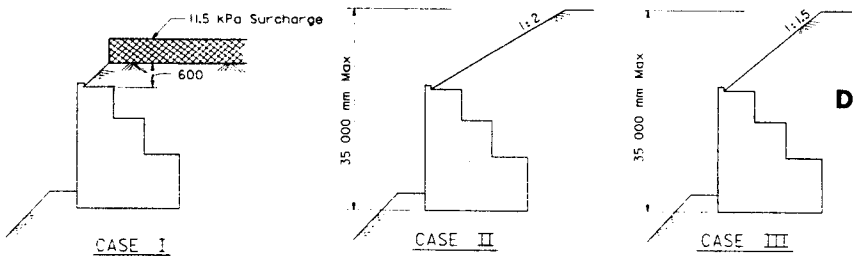

DETAIL OF DESIGN LOADING CASES

DESIGN EXAMPLE FOOTNOTES

1. To constitute a "wall base in embankment" condition, a minimum of 1525 mm of embankment at 95 percent relative compaction is required below the base of the wall. When the foundation pressure is between 240 and 385 kPa, the embankment below the wall shall be constructed with structure backfill material to the limits specified for embankments constructed with relative compaction of 95 percent. The maximum allowable soil bearing capacity is 385 kPa.

2. For walls with "wall base in original ground" condition, the allowable soil bearing capacity, design lateral loads, and slope stability shall be determined by a foundation site investigation and by an analysis. Walls shall not be founded in original ground having an allowable soil bearing capacity of less than 145 kPa.

Caltrans Metric

James C. Morse
December 4, 1997
PLAN APPROVAL DATE

JAMES C. MORSE
No. C16576
Exp. 6-30-01

To accompany plans dated _____

STATE OF CALIFORNIA
DEPARTMENT OF TRANSPORTATION

DESIGN DATA FOR REINFORCED CONCRETE CRIB WALL FOUNDATION PRESSURE-BATTERED WALL

NO SCALE

ALL DIMENSIONS ARE IN MILLIMETERS UNLESS OTHERWISE SHOWN

RSP C7F DATED DECEMBER 4, 1997 SUPERSEDES STANDARD PLAN C7F DATED JULY 1, 1997-PAGE 69 OF THE STANDARD PLANS BOOK DATED JULY 1997.

REVISED STANDARD PLAN RSP C7F

STD. PLAN RSP C7F

To accompany plans dated _____

Caltrans Metric

James C. Morse

December 4, 1997
PLANS APPROVAL DATE

James C. Morse
C16576
Exp. 6-30-01

The State of California or its officers or agents shall not be responsible for the accuracy or completeness of electronic copies of this sheet.

FOUNDATION PRESSURE - VERTICAL WALL

kPa

TYPE	LOADING CASE	WALL HEIGHT 425	700	975	1250	1525	1800	2075	2350	2625	2900	3175	3450	3725	4000	4275	4550	4825	5100	5375	5650	5925	6200	6475	6750	7025	7300	7575	7850	8125
A	I	25 *	30 *	30 *	40	50	65	80	100	120	145																			
	II	25 *	30 *	35 *	40	50	65	85	105	125	155																			
	III	30 *	30 *	40	60	80																								
B	I						55	70	85	100	120	135	155	175																
	II						60 *	70	90	105	125	150	170																	
	III						105 *	100	130																					
C	I									80	95	105	115	130	145	160	175	195	210	230	250	275	300							
	II									85 *	95	110	125	140	160	180	200	225	250	275										
	III									140 *	130	150	180	205	235	270														
D	I															130	145	155	170	180	195	205	220	235	250	270	285	305	320	340
	II															135	155	175	190	210	225	245	265	290	310	335	360	385		
	III															190 *	210	240	270	295	325	360								
E	I																			150	165	175	190	200	215	230	240	255	270	280
	II																			165	180	190	210	230	250	270	290	305	325	345
	III																			275 *	280 *	265	290	320	350	380	410	440	470	505
F	I																											225	235	250
	II																											255	270	290
	III																											350	375	405

TYPE	LOADING CASE	8400	8675	8950	9225	9500	9775	10050	10325	10600	10875	11150	11425	11700	11975	12250	12525	12800	13075	13350	13625	13900	14175	14450
A	I																							
	II																							
	III																							
B	I																							
	II																							
	III																							
C	I																							
	II																							
	III																							
D	I	360	385	405																				
	II																							
	III																							
E	I	295	310	325	340	360	375	395	410	430	450	470	490	510										
	II	370	390	415	435	460	485	515																
	III	540																						
F	I	260	275	290	300	315	330	340	355	370	385	400	415	430	450	465	480	500	520	535	555	575	595	615
	II	310	330	350	370	385	405	425	450	470	490	515	540	565	590	615	640							
	III	430	460	490	520	555	585	620	655	690														

* Indicates pressure at heel

| Heavy vertical line indicates maximum allowable wall height for particular wall type and particular loading case.

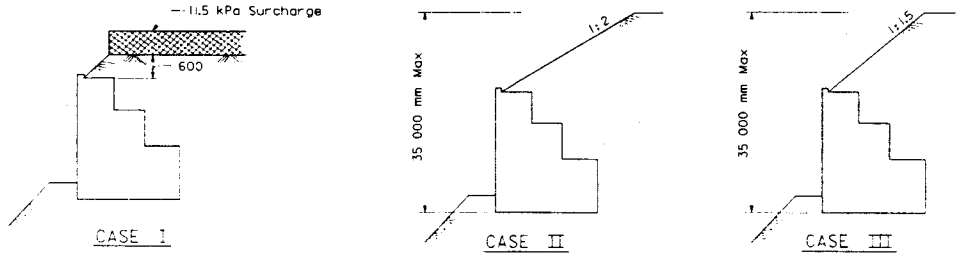

DETAIL OF DESIGN LOADING CASES

STATE OF CALIFORNIA
DEPARTMENT OF TRANSPORTATION

REINFORCED CONCRETE CRIB WALL FOUNDATION PRESSURE-VERTICAL WALL

NO SCALE

ALL DIMENSIONS ARE IN MILLIMETERS UNLESS OTHERWISE SHOWN

RSP C7G DATED DECEMBER 4, 1997 SUPERSEDES STANDARD PLAN C7G DATED JULY 1, 1997-PAGE 70 OF THE STANDARD PLANS BOOK DATED JULY 1997.

REVISED STANDARD PLAN RSP C7G

STD. PLAN RSP C7G

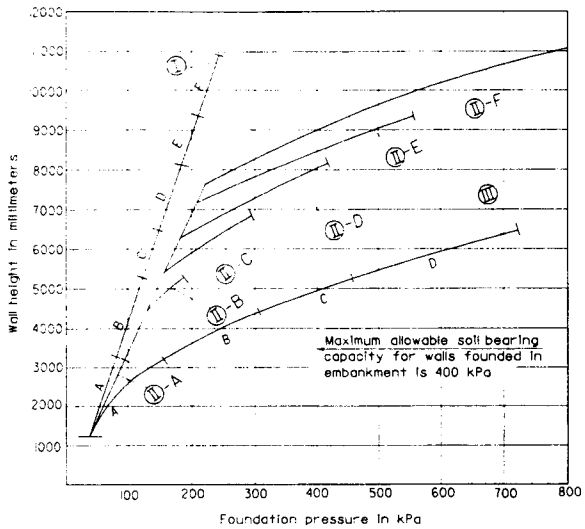

6 : 1 BATTERED WALL

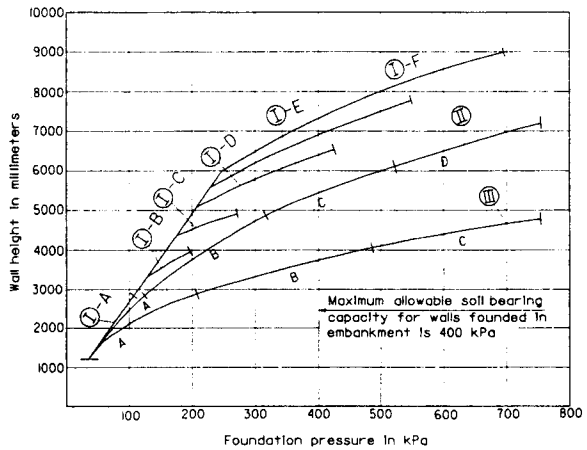

VERTICAL WALL

DESIGN EXAMPLES

EXAMPLE NO. 1

Given: Wall height 7300 millimeters.
Design loading Case II.
35 meters maximum from toe of wall to top of slope.
Base in embankment (1500 millimeters depth minimum).

Select: 6:1 Battered wall. Vertical wall not permitted. Type D wall selected. Maximum height on graph is 8050 millimeters at 400 kPa. Since the foundation pressure is 305 kPa at 7300 millimeters, the wall must be founded on a 1500 millimeters thickness of "Structure Backfill" (See Design Note 1).
A drainage system behind this wall will be required.

EXAMPLE NO. 2

Given: Wall height 8800 millimeters.
Design loading Case II. Foundation site investigation indicates lateral pressure from material above will be equivalent to 1:2 embankment slope. Base in excavation level at toe of wall. Foundation investigation determines the allowable soil bearing capacity at 300 kPa.

Select: Battered Type F wall maximum height at 400 kPa is 9000 millimeters, therefore the replacement of 1500 millimeters of excavation with "Structure Backfill" to increase the allowable soil bearing capacity to 400 kPa is required (See Design Note 1). A drainage system for this wall should be investigated.

EXAMPLE NO. 3

Given: Wall height 4600 millimeters.
Design loading Case III with overall height less than 35 millimeters. Base on original ground. Foundation investigation determines allowable soil bearing capacity at 200 kPa.

Select: Use a Type C Battered Wall, however foundation pressure exceeds 200 kPa, therefore the replacement of 1500 millimeters of excavation with "Structure Backfill" to increase the allowable soil bearing capacity to 400 kPa is required (See Design Note 1).

LEGEND FOR GRAPHS

A, B, C, D, E, F = Wall Type
I, II, III = Loading Case

- For description of loading case, see detail of design loading cases.
- Upper end of line indicates maximum wall height for a given wall type.

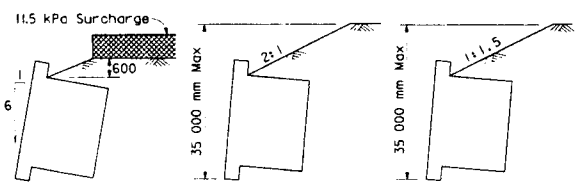

CASE I CASE II CASE III

DETAIL OF DESIGN LOADING CASES

Note: Similar loading cases for vertical wall.

NOTE

For construction details see Sheet C8A.

DESIGN NOTES

1. Wall base in embankment: A minimum depth of 1500 millimeters of embankment at 95% relative soil compaction is required below the base of all walls in order to constitute an embankment condition. When the foundation pressure is between 240 and 400 kPa, embankment below the wall shall consist of "Structure Backfill" material as set forth in Section 19-3.06 of the Standard Specifications. The limits of relative compaction (95 percent) shall be as set forth in Section 19-5.03 of the Standard Specifications.

2. Wall base in original ground: Allowable soil pressure at toe of wall shall be determined by foundation site investigation. Walls that are to retain cut slopes shall be designed for lateral and toe pressures determined from site investigation data. Overall stability of slope with wall in place must be analyzed. If original ground slopes away from toe of wall, reduction in allowable bearing capacity due to slope must be considered. Walls shall not be founded in original ground having an allowable bearing capacity of less than 145 kPa. Consideration should be given to removal and replacement of unsuitable material with "Structure Backfill" material as set forth in Section 19-3.06 of the Standard Specifications. The limits of relative compaction (95 percent) shall be as set forth in Section 19-5.03 of the Standard Specifications.

3. Drainage:
   a. Internal: Section 19-3.06 of the Standard Specifications.
   b. External: If the combined height of wall and overfill (measured along face of wall and vertically from the toe of fill to top of fill) exceeds 7600 millimeters a system to drain water away from the back face of wall shall be provided. The type and extent of this system will depend on the type of backfill material expected to be used, the combined height of wall and backfill, and the location of the water table in the area.

4. Sloping Surcharge Limitations: The maximum height of fill behind any wall, or family of walls, shall not exceed 35 meters (measured vertically from the toe of the bottom wall to the top of fill behind the uppermost wall). For a family of walls the slope of a line drawn from the top of the front face of the bottom wall to the top of the front face of any intermediate or top wall, shall in no case be steeper than 1:1.5.

Material Specifications:
Steel sheets:
AASHTO M218
310 275 kPa Ultimate
227 535 kPa Yield
@ 20% Elongation
Bolts: ASTM A307 Grade A

Caltrans Metric

James C. Morse
December 4, 1997
PLANS APPROVAL DATE
JAMES C. MORSE C16576 6-30-01

To accompany plans dated _____

STATE OF CALIFORNIA
DEPARTMENT OF TRANSPORTATION

STEEL CRIB WALL DESIGN DATA

NO SCALE

ALL DIMENSIONS ARE IN MILLIMETERS UNLESS OTHERWISE SHOWN

RSP C8C DATED DECEMBER 4, 1997 SUPERSEDES STANDARD PLAN C8C DATED JULY 1, 1997-PAGE 73 OF THE STANDARD PLANS BOOK DATED JULY 1997.

REVISED STANDARD PLAN RSP C8C

STD. PLAN RSP C8C

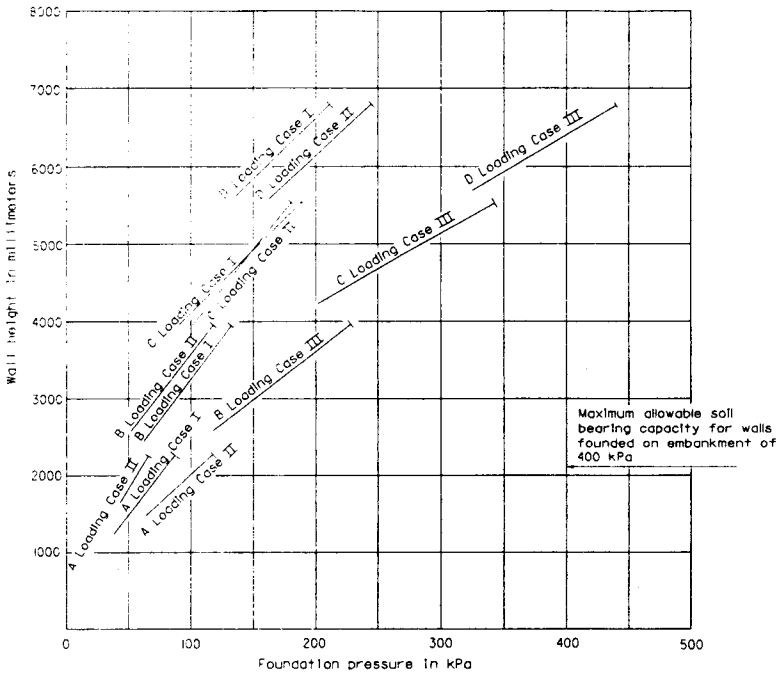

6:1 BATTERED WALL

LEGEND FOR GRAPH

- A, B, C, D = Wall type.
- Solid lines indicate normal range of wall use. Upper end of line indicates maximum wall height for a given wall type and loading.
- For description of loading case see DETAIL OF DESIGN LOADING CASES.

DESIGN NOTES

1. WALL BASE IN EMBANKMENT: A minimum depth of 1500 mm of embankment at 95% relative soil compaction is required below the base of all walls in order to constitute an embankment condition. When the foundation pressure is between 240 kPa and 400 kPa embankment below the wall shall consist of "Structure backfill" material as set forth in Section 19-3.06 of the Standard Specifications. The limits of relative compaction (95%) shall be as set forth in Section 19-5.03 of the Standard Specifications.
2. WALL BASE IN ORIGINAL GROUND: Allowable soil pressure at toe of wall shall be determined by foundation site investigation. Walls that are to retain cut slopes shall be designed for lateral and toe pressures determined from site investigation data. Overall stability of slope with wall in place must be analyzed. If original ground slopes away from toe of wall, reduction in allowable bearing capacity due to slope must be considered. Walls shall not be founded in original ground having an allowable bearing capacity of less than 145 kPa. Consideration should be given to removal and replacement of unsuitable material with "Structure backfill" material as set forth in Section 19-3.06 of the Standard Specifications. The limits of relative compaction (95%) shall be as set forth in Section 19-5.03 of the Standard Specifications.
3. Soil Parameters:
   Backfill - $\phi = 34°$, $\gamma = 19\ kN/m^3$
   Foundation - $\phi = 34°$
   Lateral earth pressure determined by Rankine Theory.

DESIGN EXAMPLES

EXAMPLE NO. 1

Given: Wall height 4200 mm
Design Loading Case II.
Base in embankment (1500 mm depth minimum See Note 1)

Select: 6:1 batter C wall gives 115 kPa foundation pressure.
Vertical Wall not permitted.
See chart for required numbers and sizes of timber members.

EXAMPLE NO. 2

Given: Wall height 5800 mm
Design Loading Case III. Base is in original ground.
Foundation site investigation determines the allowable soil bearing capacity at 300 kPa.

Select: 6:1 batter D wall gives 335 kPa foundation pressure.
Vertical wall not permitted. Since foundation pressure is greater than allowable bearing capacity of native material, replace original material with "Structure backfill" to increase base bearing capacity. (See Note 2)

EXAMPLE NO. 3

Given: Wall height 6600 mm
Design Loading Case II. Base is in embankment. (See Note 1)

Select: 6:1 batter D wall gives 230 kPa foundation pressure.
Vertical wall not permitted. Foundation pressure is less than 240 kPa. Base material below wall shall be compacted to a relative compaction of 95%. (See Note 1).

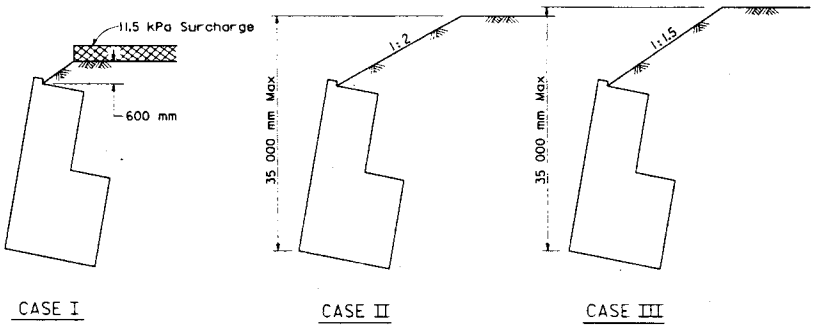

DETAIL OF DESIGN LOADING CASES

Caltrans Metric

D ST	COUNTY	ROUTE	PROJECT	SHEET	TOTAL SHEETS

December 4, 1997
PLANS APPROVAL DATE

The State of California or its officers or agents shall not be responsible for the accuracy or completeness of electronic copies of this plan sheet.

To accompany plans dated _____

STATE OF CALIFORNIA
DEPARTMENT OF TRANSPORTATION

TIMBER CRIB WALL TYPES A,B,C AND D DESIGN DATA

NO SCALE

ALL DIMENSIONS ARE IN MILLIMETERS UNLESS OTHERWISE SHOWN

RSP C9B DATED DECEMBER 4, 1997 SUPERSEDES STANDARD PLAN C9B DATED JULY 1, 1997-PAGE 75 OF THE STANDARD PLANS BOOK DATED JULY 1997.

REVISED STANDARD PLAN RSP C9B

STD. PLAN RSP C9B

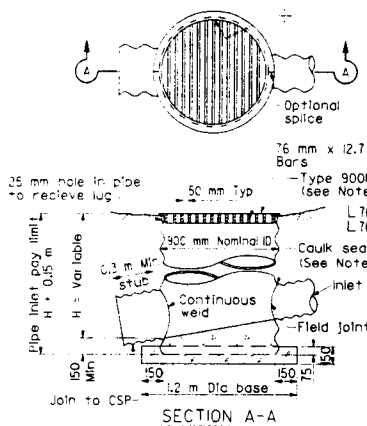

SECTION A-A

TYPE GMP

STEEL PIPE INLET WITH GRATE

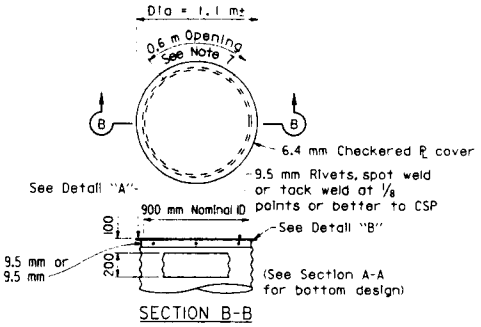

SECTION B-B

TYPE OMP or OMPI

STEEL PIPE INLET WITH SIDE OPENING AND STEEL COVER (See Note 6)

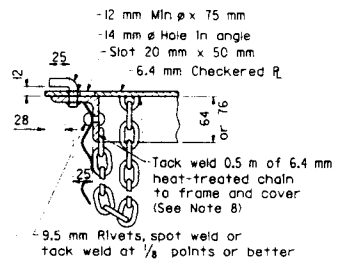

DETAIL "A"

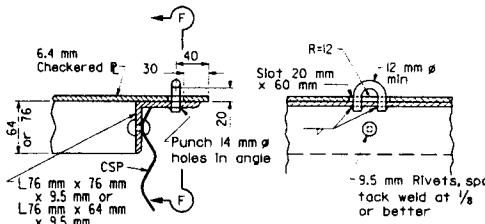

DETAIL "B"

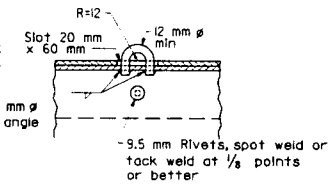

SECTION C-C

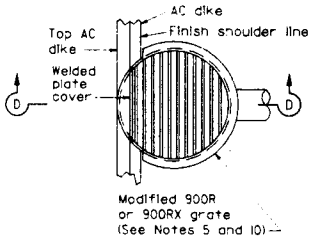

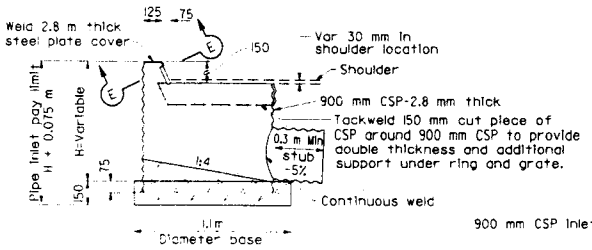

SECTION D-D

TYPE ODI

STEEL PIPE INLET WITH GRATE AND RAISED OPENING AT AC DIKE FLOWLINE

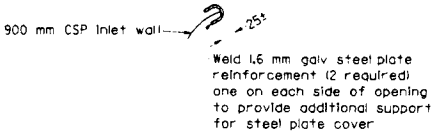

SECTION E-E

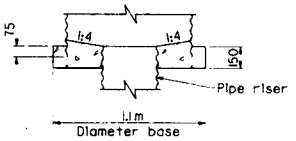

TYPE ODI BASE DETAIL FOR PIPE RISER CONNECTION

Caltrans Metric

Glenn DeCou
C34547
9-30-99

December 4, 1997

To accompany plans dated _____

NOTES

1. For Details of concrete pipe inlets, see New Standard Plan NSP D75B.
2. For details of ladder and steps and when ladder or steps are required, see Standard Plan NSP A75C.
3. Inlet pipes shall not protrude into basin.
4. Except for inlets used for junction boxes, basin floors shall have minimum slope of 1:4 from all directions toward outlet pipe, and a wood trowel finish.
5. See Standard Plans D77A and D77B for Grate and Frame Details and mass of Miscellaneous Iron and Steel.
6. Designation of Type OMPI pipe inlets on plans indicates trash racks are to be furnished and installed on all side openings. See New Standard Plan NSP D75C for trash rack details.
7. More than one side opening may be required. Location and number as ordered by the Engineer.
8. Chain to be provided when specified.
9. Caulk seal with pliable mixture of sand, portland cement, and emulsified asphalt (Mixture of 1 part portland cement, 3-5 parts sand, and 1½ parts SS1 emulsified asphalt.)
10. Place pipe so bars of grate will be parallel with main surface flow.

STATE OF CALIFORNIA
DEPARTMENT OF TRANSPORTATION

PIPE INLETS

NO SCALE

ALL DIMENSIONS ARE IN MILLIMETERS UNLESS OTHERWISE SHOWN

NSP D75A, NSP D75B AND NSP D75C DATED DECEMBER 4, 1997 SUPERSEDES STANDARD PLANS D75 DATED JULY 1, 1997-PAGE 81 OF THE STANDARD PLANS BOOK DATED JULY 1997.

NEW STANDARD PLAN NSP D75A

STD. PLAN NSP D75A

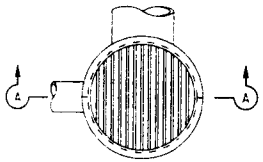

Cast 25 mm x 65 mm slot in pipe to recieve lug

Type 900R grate (see Notes 5 and 9)

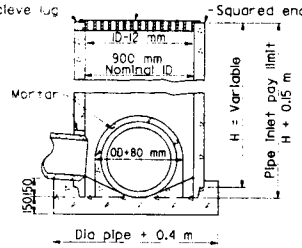

SECTION A-A

TYPE GCP

CONCRETE PIPE INLET WITH GRATE

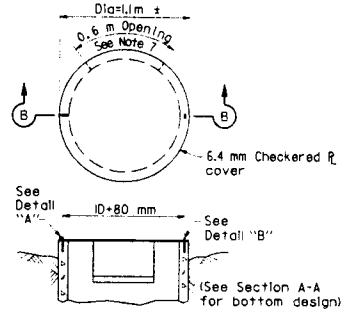

SECTION B-B

TYPE OCP or OCPI

CONCRETE PIPE INLET WITH STEEL COVER (See Note 6)

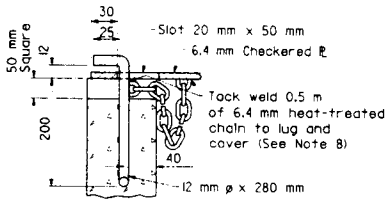

DETAIL "A"

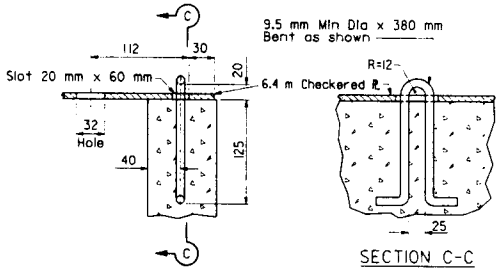

DETAIL "B"

SECTION C-C

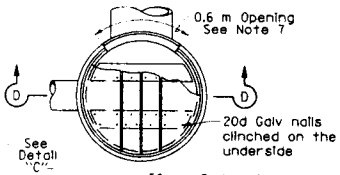

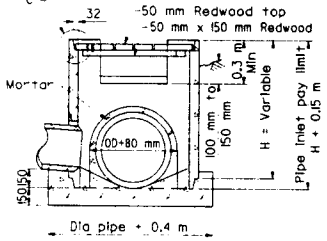

SECTION D-D

TYPE OCP or OCPI

CONCRETE PIPE INLET WITH REDWOOD COVER (See Notes 6 and 10)

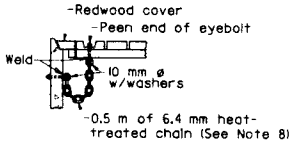

DETAIL "C"

Caltrans Metric

Glenn DeCou

December 4, 1997

Glenn DeCou C34547 Exp. 9-30-99

To accompany plans dated _____

NOTES

1. For details of steel pipe inlets, see New Standard Plan NSP D75A.
2. For details of ladder and steps and when ladder or steps are required, see New Standard Plan NSP D75C.
3. Inlet pipes shall not protrude into basin.
4. Except for inlets used for junction boxes, basin floors shall have minimum slope of 1:4 from all directions toward outlet pipe, and a wood trowel finish.
5. See Standard Plans D77A and D77B for Grate and Frame Details and Weights of Miscellaneous Iron and Steel.
6. Designation of Type OCPI pipe inlets on plans indicates trash racks are to be furnished and installed on all side openings. See Standard Plan NSP D75C for Trash rack details.
7. More than one side opening may be required. Location and number as ordered by the Engineer. Opening may be cast in pipe.
8. Chain to be provided when specified.
9. Place pipe so bars of grate will be parallel with main surface flow.
10. Redwood covers not to be used where there is a possibility of wheelloads. Use Type GCP inlet where there is a possibility of wheelloads.

STATE OF CALIFORNIA
DEPARTMENT OF TRANSPORTATION

PIPE INLETS

NO SCALE

ALL DIMENSIONS ARE IN MILLIMETERS UNLESS OTHERWISE SHOWN

NSP D75A, NSP D75B AND NSP D75C DATED DECEMBER 4, 1997 SUPERSEDES STANDARD PLANS D75 DATED JULY 1, 1997-PAGE 81 OF THE STANDARD PLANS BOOK DATED JULY 1997.

NEW STANDARD PLAN NSP D75B

STD. PLAN NSP D75B

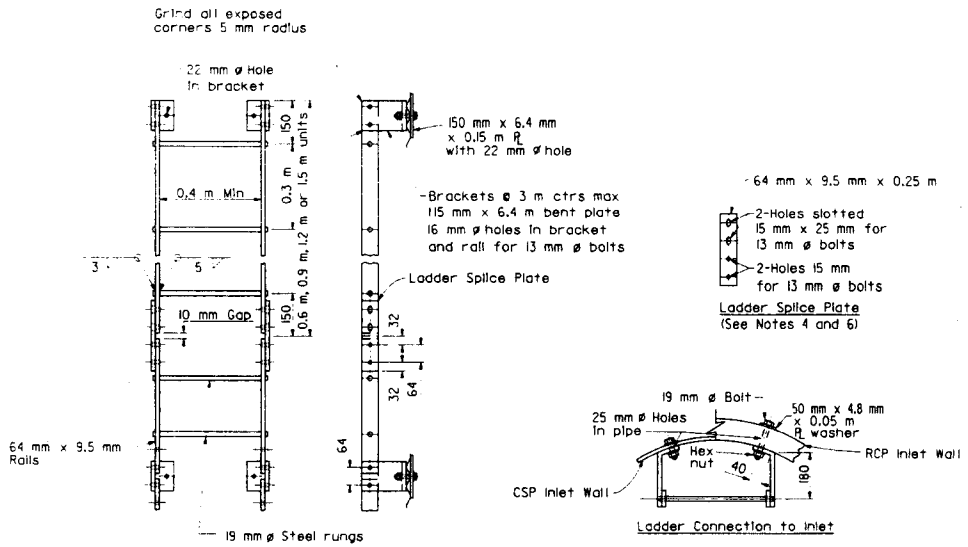

LADDER DETAILS

See Notes 1, 2, 3, 4 and 6

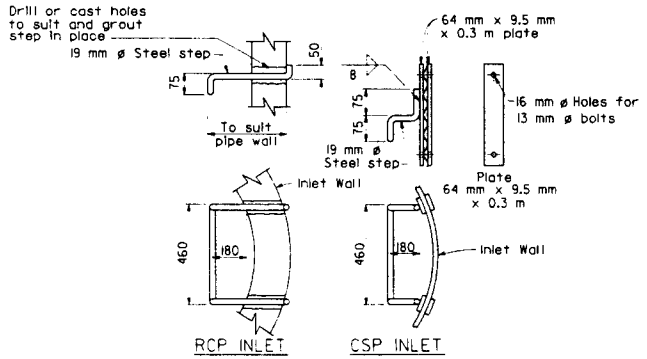

STEP DETAILS

(See Notes . and 6)

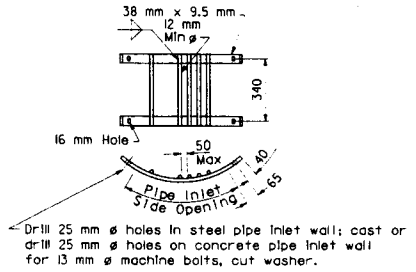

TRASH RACK DETAILS

(See Notes 5 and 6)

Caltrans Metric

Glenn DeCou
REG. STRUCT. ENGINEER

December 4, 1997
PLANS APPROVAL DATE

Glenn DeCou
C34547
Exp. 9-30-99

The State of California or its officers or agents shall not be responsible for the accuracy or completeness of electronic copies of this plan sheet.

To accompany plans dated _____

NOTES

1. Ladders and Steps - None required where "H" dimension of pipe inlet is less than 0.75 m. Where "H" is 0.75 m or more, install steps or ladder with lowest rung not more than 0.3 m above the floor and highest rung not more than 0.3 m below top of inlet. The distance between steps or rungs shall not exceed 0.3 m and shall be uniform throughout the length of the wall. Place steps or ladder in the wall without an opening.
2. Ladder may be constructed in one length at contractor's option on RCP inlet.
3. On CSP inlet, connect ladder splice plate so joint can compress 10 mm.
4. Ladder splice plate to be connected with 13 mm ø bolts with double nuts.
5. Trash racks used on Type OCPI and OWPI inlets. Trash racks required for pumping installations.
6. All hardware to be galvanized after fabrication. See Standard Specifications or Special Provisions.

STATE OF CALIFORNIA
DEPARTMENT OF TRANSPORTATION

PIPE INLETS LADDER, STEP AND TRASH RACK DETAILS

NO SCALE

ALL DIMENSIONS ARE IN MILLIMETERS UNLESS OTHERWISE SHOWN

NSP D75A, NSP D75B AND NSP D75C DATED DECEMBER 4, 1997 SUPERSEDES STANDARD PLANS D75 DATED JULY 1, 1997-PAGE 81 OF THE STANDARD PLANS BOOK DATED JULY 1997.

NEW STANDARD PLAN NSP D75C

STD. PLAN NSP D75C

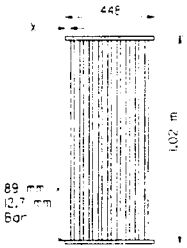

TYPE 450-9

35 mm Clear spacing. Use within the roadbed on highways where bicycles and pedestrians are excluded.

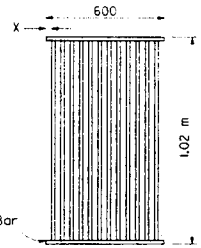

TYPE 600-9

51mm Clear spacing. Use in locations off the roadbed on all types of highways.

TYPE 600-12

35 mm Clear spacing. Use within the roadbed on highways where bicycles and pedestrians are excluded.

RECTANGULAR GRATE DETAILS

(See table below)

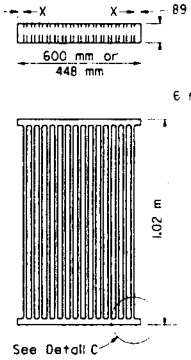

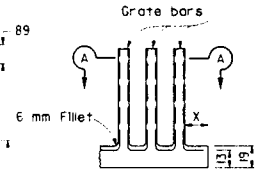

DETAIL C

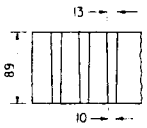

SECTION A-A

ALTERNATIVE CAST NODULAR IRON GRATE OR CAST STEEL GRATE

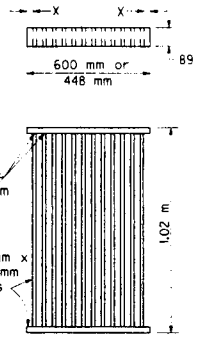

ALTERNATIVE WELDED GRATE

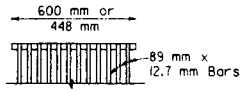

CAST END BLOCK

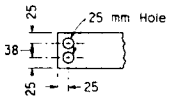

END OF BAR

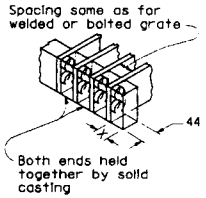

ALTERNATIVE CAST NODULAR IRON OR CAST STEEL END BLOCK GRATE

Caltrans Metric

December 4, 1997

PLANS APPROVAL DATE

Glenn DeCou C34547 Exp. 9-30-99

To accompany plans dated _____

NOTES

1. Grate type numbers refer to approximate width of grate in millimeters and number of bars, respectively.
2. Contractor has the option of using cast nodular iron, cast steel, welded, bolted, or cast end block grate.
3. See Special Provisions for requirements pertaining to galvanizing or asphalt dipping of grates and frames.
4. Rounded top of bars optional on all grates.
5. Pipe inlets with a grate shall be placed so that bars parallel direction of principle surface flow.
6. Full penetration butt welds may be substituted for the fillet welds on all anchors.
7. Standard square, hexagon, round or equivalent headed anchors may be substituted for the right angle hooks on the anchors shown on this plan.
8. Grate and frame weights are based on welded grates (weights of face angles, steps, protection bars, etc. are not included).

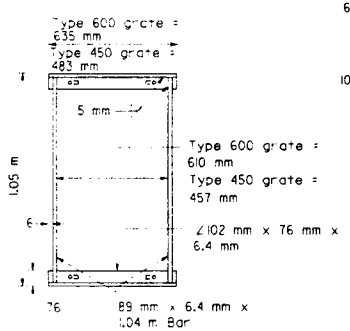

TYPICAL FRAME

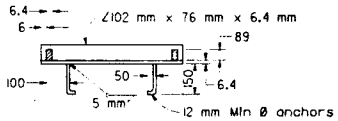

CROSS SECTION

(Thru frame)

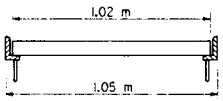

LONGITUDINAL SECTION

(Thru frame and grate)

RECTANGULAR FRAME DETAILS

(For all rectangular grates)

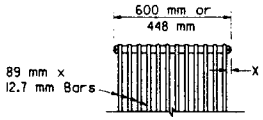

BOLTED END BLOCK

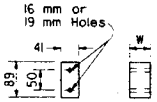

BAR SPACER

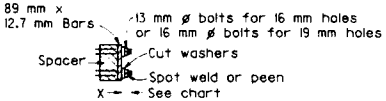

BOLTING DETAIL

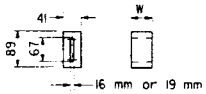

ALTERNATIVE SPACER

35 mm or 50 mm

ALTERNATIVE BOLTED GRATE

GRATE BAR SPACING TABLE

TYPE	NO. OF BARS	CLEAR BAR SPACING (mm)	X (mm)
450-9	9	35	27
600-9	9	51	40
600-12	12	35	32

INLET TYPE	COVER TYPE	MASS (kg)
OS	PLATE	79
OL-2.1	PLATE	77
OL-3.0	PLATE	77
OL-4.3	PLATE	77
OL-6.4	PLATE	77
OCP	PLATE	51
OCP1	PLATE	51
OCP1	REDWOOD	19
OMP	PLATE	80
OMP1	PLATE	80

INLET TYPE	GRATE TYPE	NO. OF GRATES	MASS (kg)
GDO	600-12	2	288
GOL-2.1	600-12	1	148
GOL-3.0	600-12	1	148
GO,G1,G2,G3,G4(TYPE 600)	600-9	1	119
	600-12	1	148
G4(TYPE 450),G5,G6	450-9	1	113
GT-1	450-9	2	226
GT-2	450-9	2	226
GT-3	600-12	2	296
GT-4	600-12	2	296
TRASH RACK			10

BASIS FOR MISC IRON & STEEL FINAL PAY MASSES FOR DRAINAGE INLETS

(See General Notes, No 8)

STATE OF CALIFORNIA
DEPARTMENT OF TRANSPORTATION

GRATE DETAILS

NO SCALE

ALL DIMENSIONS ARE IN MILLIMETERS UNLESS OTHERWISE SHOWN

RSP D77A DATED DECEMBER 4, 1997 SUPERSEDES STANDARD PLAN D77A DATED JULY 1, 1997-PAGE 82 OF THE STANDARD PLANS BOOK DATED JULY 1997.

REVISED STANDARD PLAN RSP D77A

STD. PLAN RSP D77A

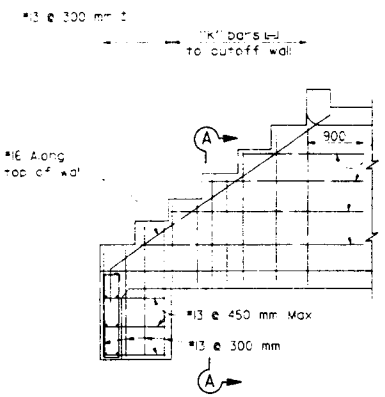

LONGITUDINAL SECTION
Showing reinforcement in outside face

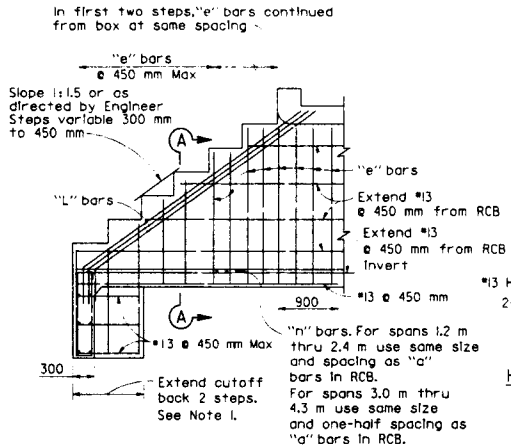

LONGITUDINAL SECTION
Showing reinforcement in inside face

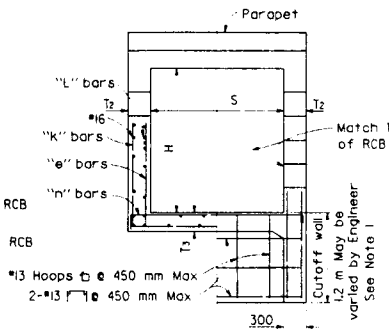

HALF SECTION A-A | END ELEVATION

Dimensions S and T_3 to be same as adjacent RCB.
T_2 = Same as adjacent RCB (200 mm Min).

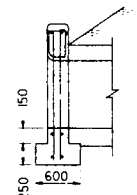

SECTION B-B

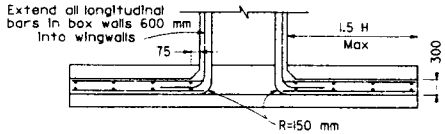

SECTION C-C

TYPE "E" STEPPED WINGWALL (SINGLE BOX CULVERT)

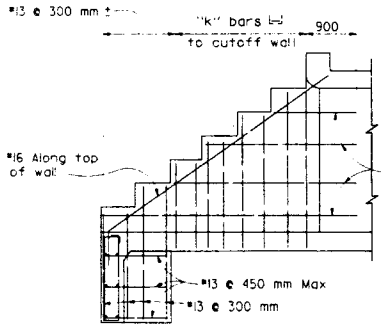

LONGITUDINAL SECTION
Showing reinforcement in outside face

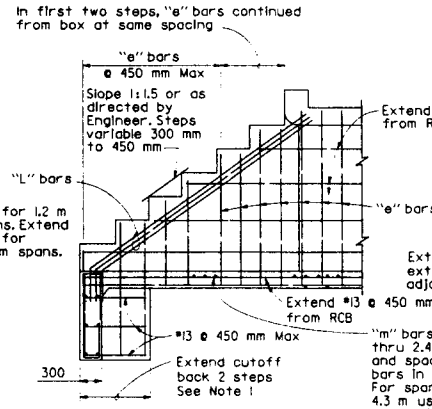

LONGITUDINAL SECTION
Showing reinforcement in inside face

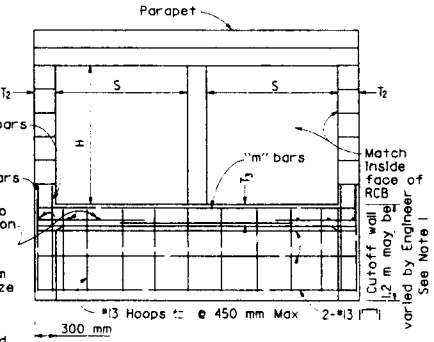

END ELEVATION
Dimensions S and T_3 to be same as adjacent RCB.
T_2 = Same as adjacent RCB (200 mm min).

TYPE "E" STEPPED WINGWALL (MULTIPLE BOX CULVERT)

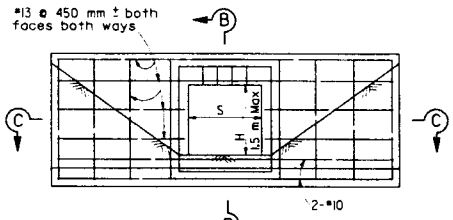

ELEVATION

TYPE "D" STRAIGHT WINGWALL

Details similar for multiple span boxes.
For Parapet Details not shown see Standard Plan D82.

NOTES

1. Eliminate cutoff walls if adjacent channel is paved.
2. For H not shown use reinforcement for next greater height.

TABLE OF REINFORCEMENT FOR TYPE "E" WINGWALLS										
H (m) (See Note 2)		0.9	1.2	1.5	1.8	2.1	2.4	3.0	3.7	4.3
"k" Bars	Bar No	13	13	16	16	16	16	16	16	16
	Spacing(mm)	300	300	300	250	225	200	175	125	100
"L" Bars	Bar No	16	16	19	19	22	22	22	22	22
	Number each wall	2	2	3	3	3	3	3	3	3

STATE OF CALIFORNIA
DEPARTMENT OF TRANSPORTATION

BOX CULVERT WINGWALLS TYPES D AND E

NO SCALE

ALL DIMENSIONS ARE IN MILLIMETERS UNLESS OTHERWISE SHOWN

RSP D85 DATED DECEMBER 4, 1997 SUPERSEDES STANDARD PLAN D85 DATED JULY 1, 1997-PAGE 91 OF THE STANDARD PLANS BOOK DATED JULY 1, 1997.

REVISED STANDARD PLAN RSP D85

Caltrans Metric

Paul Cotter
December 4, 1997
Paul Cotter 34509 9-30-99

To accompany plans dated _____

STD. PLAN RSP D85

EXISTING	PROPOSED	ITEM DESCRIPTION
		WATER METER (BY OTHERS) (WM)
		BACKFLOW PREVENTER ASSEMBLY (BPA)
		BACKFLOW PREVENTER ASSEMBLY IN ENCLOSURE (BPAE)
		BACKFLOW PREVENTER ENCLOSURE (BPE)
		BOOSTER PUMP (BP)
		TRUCK LOADING STANDPIPE (TLS)
	FS	FLOW SENSOR (FS)
		MASTER IRRIGATION CONTROLLER (MIC)
		AUXILIARY IRRIGATION CONTROLLER (AIC)
		IRRIGATION CONTROLLER (IC)/ IRRIGATION CONTROLLER (IC) (BATTERY)
		IRRIGATION CONTROLLER(S) IN CONTROLLER ENCLOSURE CABINET (ICC)
		CONTROL AND NEUTRAL CONDUCTORS (CNC)
	S	SPRINKLER CONTROL CONDUIT
		CONDUIT (COND)
DIP	DIP	DUCTILE IRON PIPE (SUPPLY LINE) (MAIN) (DIP)
		GALVANIZED STEEL PIPE (SUPPLY LINE) (MAIN) (GSP)
		GALVANIZED STEEL PIPE (SUPPLY LINE) (LATERAL) (GSP)
		PLASTIC PIPE (PR 200) (SUPPLY LINE) (MAIN)
		PLASTIC PIPE (PR 200) (SUPPLY LINE) (LATERAL)
		PLASTIC PIPE (IRRIGATION LINE)
		REMOTE CONTROL VALVE (RCV) REMOTE CONTROL VALVE (MASTER) (RCVM)
		MANUAL CONTROL VALVE (MCV)
		VALVE ASSEMBLY UNIT (VAU)
		WYE STRAINER (WS)
		FILTER ASSEMBLY UNIT (FAU)
		GATE VALVE (GV)
		BALL VALVE (BV)

EXISTING	PROPOSED	ITEM DESCRIPTION
		QUICK COUPLING VALVE (QCV)
		PRESSURE REDUCING VALVE (PRV)
		PRESSURE RELIEF VALVE (PRLV)
		FLOW CONTROL VALVE (FCV)
		COMBINATION AIR RELEASE VALVE (CARV)
		CHECK VALVE (CV)
		FLUSH VALVE (FV)
		NOZZLE LINE W/TURNING UNION
		IRRIGATION SYSTEM
		IRRIGATION SYSTEM TO BE REMOVED
		CHAIN LINK GATE
		QUICK COUPLING VALVE W/SPRINKLER PROTECTOR
	3	SPRINKLER W/SPRINKLER PROTECTOR
		CONNECT TO EXISTING SYSTEM
		CAP
		CAP EXISTING

VALVE CODE

- RCV SIZE (mm)
- IRRIGATION CONTROLLER
- CONTROLLER STATION
- VALVE IN PARALLEL (IF APPLICABLE)
- L/min
- QUANTITY OF TYPE C, D, OR E SPRINKLERS

* (63.5-A-2b-151.4-60)

- MCV SIZE (mm)
- VALVE NUMBER
- L/min
- QUANTITY OF TYPE C, D, OR E SPRINKLERS

* [50.8-3-113.5-50]

* VALVE CODES FOR EXISTING VALVES ARE SHOWN IN A DASHED ENCLOSURE.

Caltrans Metric

DIST	COUNTY	ROUTE	POST MILE	SHEET NO.	TOTAL SHEETS

LICENSED LANDSCAPE ARCHITECT

December 4, 1997
PLANS APPROVAL DATE

The State of California or its officers or agents shall not be responsible for the accuracy or completeness of electronic copies of this plan sheet.

To accompany plans dated _____

STATE OF CALIFORNIA
DEPARTMENT OF TRANSPORTATION

PLANTING AND IRRIGATION SYMBOLS

RSP H2 DATED DECEMBER 4, 1997 SUPERSEDES STANDARD PLAN H2 DATED JULY 1, 1997-PAGE 123 OF THE STANDARD PLANS BOOK DATED JULY 1997.

REVISED STANDARD PLAN RSP H2

STD. PLAN RSP H2

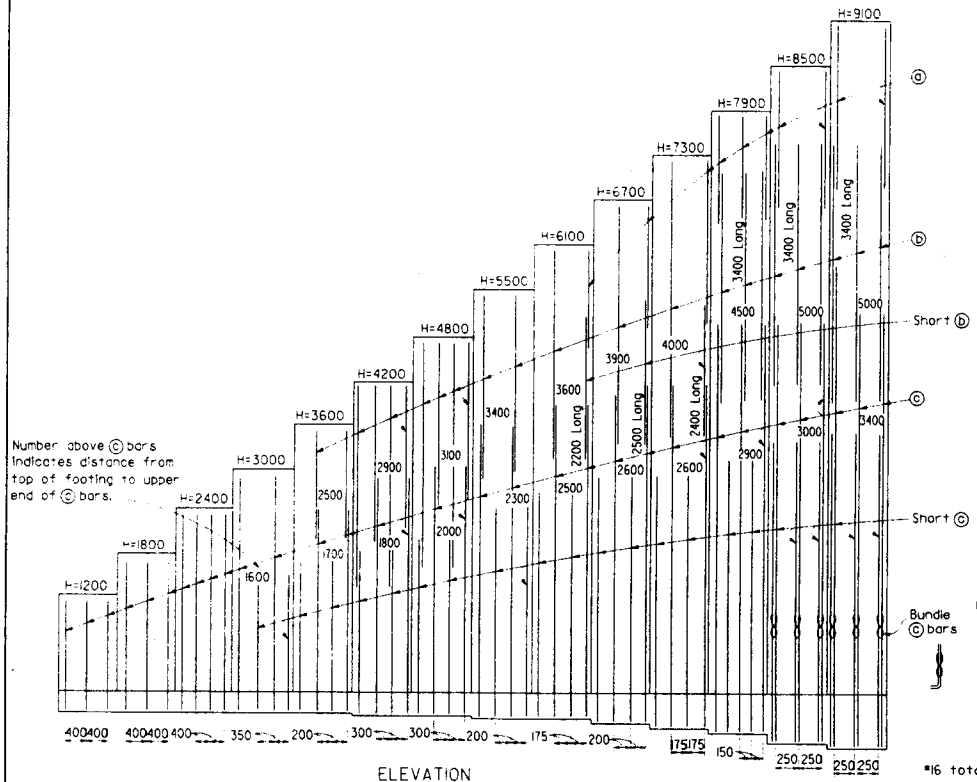

ELEVATION

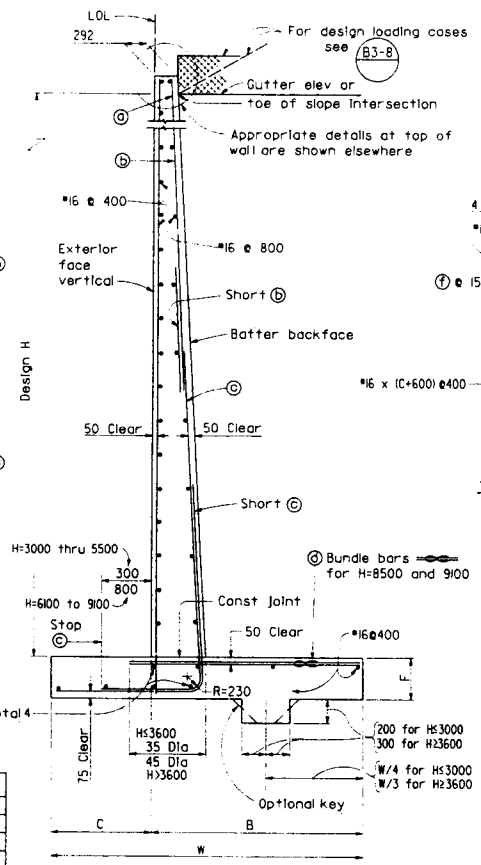

SPREAD FOOTING SECTION

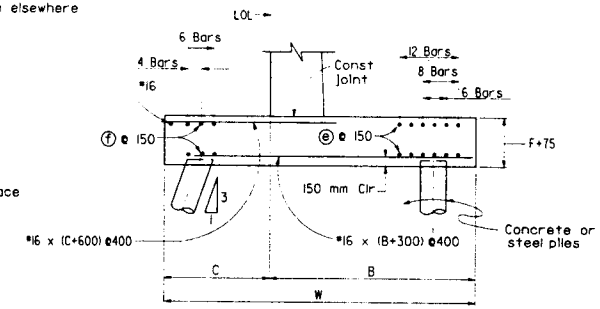

400 kN PILE FOOTING SECTION

Reinforcement detailed is to be placed in addition to that shown for spread footing. All piles not shown, see Pile Layout on other sheets.

TABLE OF REINFORCING STEEL DIMENSIONS AND DATA

Design H	1200	1800	2400	3000	3600	4200	4800	5500	6100	6700	7300	7900	8500	9100
W	1000	1300	1600	1900	2200	2450	2750	3050	3350	3700	4050	4350	4650	5100
C	300	400	500	600	700	800	900	1000	1100	1200	1350	1450	1550	1650
B	700	900	1100	1300	1500	1650	1850	2050	2250	2500	2700	2900	3100	3450
F	400	400	400	400	400	450	450	450	450	500	550	650	750	850
Batter	100:4	100:4	100:4	100:4	100:4	100:4	100:4	100:4	100:4	100:4	100:5	100:6	100:6	100:7
ⓐ bars	—	—	—	—	—	—	—	—	#16@700	#16@800	#16@700	#16@300	#16@260	#25@500
ⓑ bars	—	—	—	—	#16@400	#16@300	#16@300	#19@400	#25@350	#25@400	#25@350	#25@300	#25@250	#29@250
ⓒ bars	#16@400	#16@400	#16@400	#19@350	#19@200	#25@300	#29@300	#29@200	#29@175	#36@200	#36@175	#36@150	#36@250 ⧚	#36@250 ⧚
ⓓ bars	#16@400	#16@400	#16@400	#16@350	#16@200	#25@300	#29@300	#29@200	#29@175	#36@200	#36@175	#36@150	#36@250 ⧚	#36@250 ⧚
Total ⓔ bars	6-#19	6-#19	6-#19	12-#19	12-#19	12-#19	12-#19	8-#19	8-#19	8-#19	6-#19	6-#19	6-#19	6-#19
Total ⓕ bars	—	—	—	6-#19	6-#19	6-#19	6-#19	6-#19	6-#19	6-#19	4-#16	4-#16	4-#16	4-#16
Loading Case I Toe Pressure kPa	80	90	105	120	135	160	170	190	205	220	235	255	275	300
Loading Case II Toe Pressure kPa	55	70	95	110	130	160	175	200	225	265	285	310	340	360
Loading Case III Toe Pressure kPa	65	80	100	120	140	165	180	205	230	260	280	310	345	360

⧚ Denotes a bundle of 2 bars

NOTES

1. For details not shown and drainage notes see B3-8
2. For wallstem joint details see B0-3/3-3 and B0-3/3-4
3. For pile footing for design H=1200 use same footing dimensions as for design H=1800.

Caltrans Metric

James C. Moore
December 4, 1997
PLANS APPROVAL DATE
JAMES C. MOORE C16576 6-30-01 CIVIL STATE OF CALIFORNIA

To accompany plans dated _____

STATE OF CALIFORNIA
DEPARTMENT OF TRANSPORTATION

RETAINING WALL TYPE 1 H=1200 THROUGH 9100 mm

NO SCALE

ALL DIMENSIONS ARE IN MILLIMETERS UNLESS OTHERWISE SHOWN

RSP B3-1 DATED DECEMBER 4, 1997 SUPERSEDES STANDARD PLAN B3-1 DATED JULY 1, 1997-PAGE 156 OF THE STANDARD PLANS BOOK DATED JULY 1997.

REVISED STANDARD PLAN RSP B3-1

STD. PLAN RSP B3-1

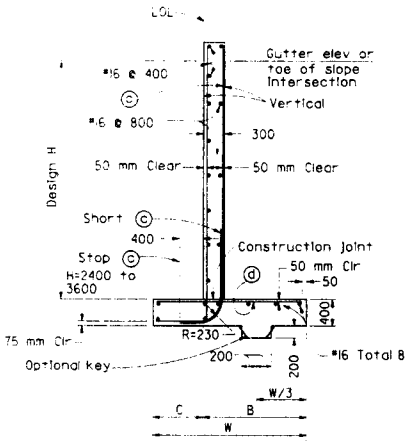

SPREAD FOOTING SECTION

Place concrete in toe against undisturbed material, except as permitted by the Engineer.

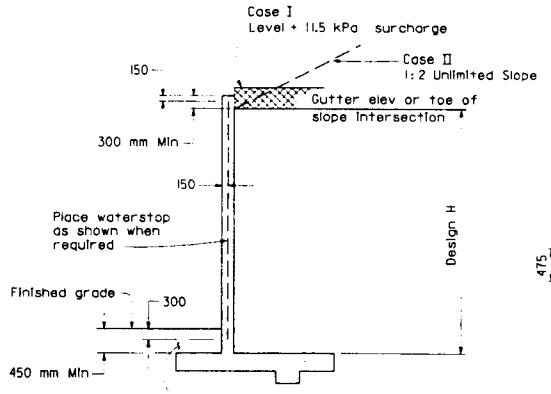

Backfill sufficiently to prevent ponding. To be done after removal of wall forms and before backfilling behind walls.

DESIGN

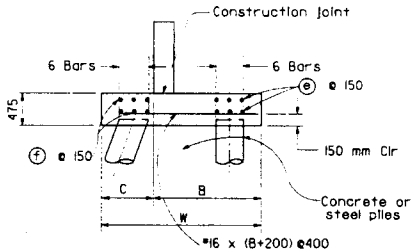

400 kN PILE FOOTING SECTION

Reinforcement detailed is to be placed in addition to that shown for spread footing. All piles not shown, see Pile Layout on other sheets.

For pile footing for Design H=1200 use same footing dimensions as for Design H=1800.

TABLE OF REINFORCING STEEL, DIMENSIONS AND DATA					
Design H	1200	1800	2400	3000	3600
W	1000	1300	1600	1900	2200
C	300	400	500	600	700
B	700	900	1100	1300	1500
ⓒ bars	#16@400	#16@400	#16@200	#19@200	#25@200
ⓓ bars	#16@400	#16@400	#16@400	#16@200	#19@200
Total ⓔ bars	6-#19	6-#19	6-#19	6-#25	6-#25
Total ⓕ bars	—	—	—	6-#19	6-#19
Case I-Toe Press. kPa	75	95	110	125	135
Case II-Toe Press. kPa	50	70	90	110	130

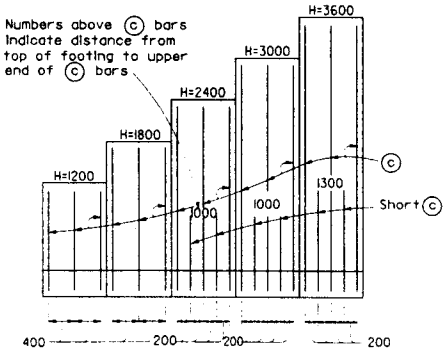

ELEVATION

NOTES

1. Retaining Wall Type 1A designed for Design Loading Cases I and II only.
2. For design notes, drainage notes, and other details, See (B3-8).
3. For wall stem joint details, see (B0-3 / 3-3) and (B0-3 / 3-4).

STATE OF CALIFORNIA
DEPARTMENT OF TRANSPORTATION

RETAINING WALL TYPE 1A

NO SCALE

ALL DIMENSIONS ARE IN MILLIMETERS UNLESS OTHERWISE SHOWN

RSP B3-3 DATED DECEMBER 4, 1997 SUPERSEDES STANDARD PLAN B3-3 DATED JULY 1, 1997-PAGE 158 OF THE STANDARD PLANS BOOK DATED JULY 1997.

REVISED STANDARD PLAN RSP B3-3

Caltrans Metric

December 4, 1997

James C. Moore C16576 6-30-01

To accompany plans dated _____

STD. PLAN RSP B3-3

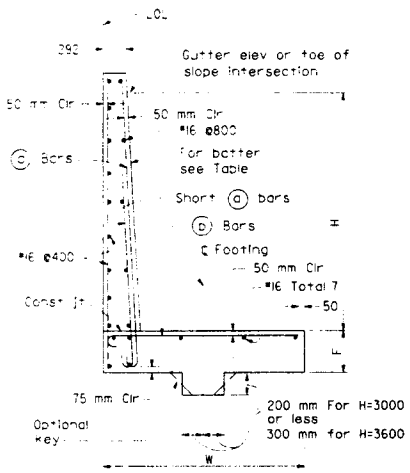

SPREAD FOOTING SECTION

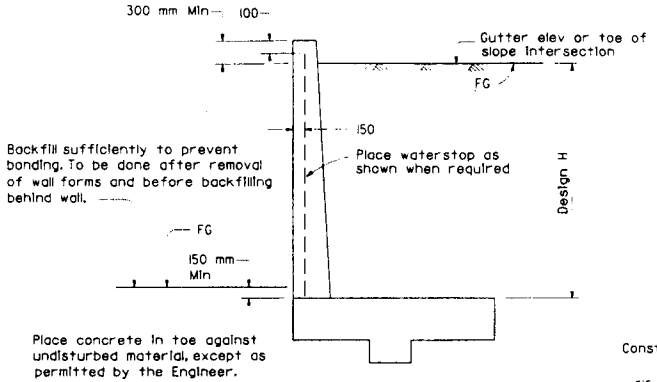

DESIGN

For drainage notes and other details, see (B3-8)

MAX PILE SPACING FOR 400 kN PILES

Design H	Front Row 1:3 Batter	Back Row Vertical
1200	5400	5400
1800	3600	5400
2400	2700	5400
3000	1800	3600
3600	1200	2400

For actual spacing, see Wall Layout.

Pile layout does not apply to Case IV conditions.

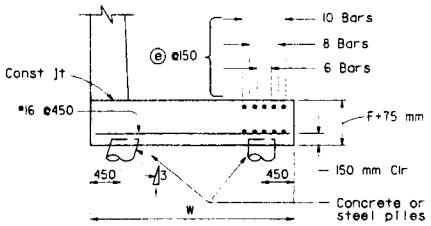

Reinforcement detailed is to be placed in addition to that shown for spread footings.

◉ For Design H=1200 use W=1550
All others from table

400 kN PILE FOOTING SECTION

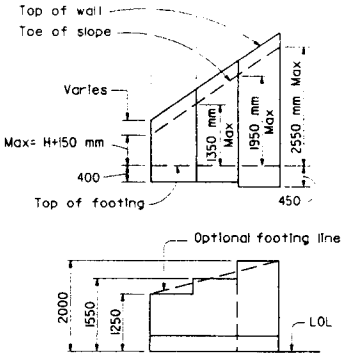

TYPICAL LAYOUT EXAMPLE

For joints required, see (B0-3 3-3) & (B0-3 3-4)

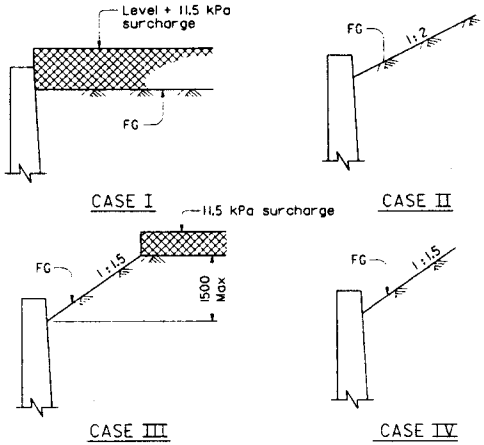

DETAIL OF DESIGN LOADING CASES

Case I Level +11.5 kPa surcharge
Case II 1:2 Unlimited slope
Case III 1:1.5 Limited slope (1500 max height) +11.5 kPa Surcharge
Case IV 1:1.5 Unlimited slope

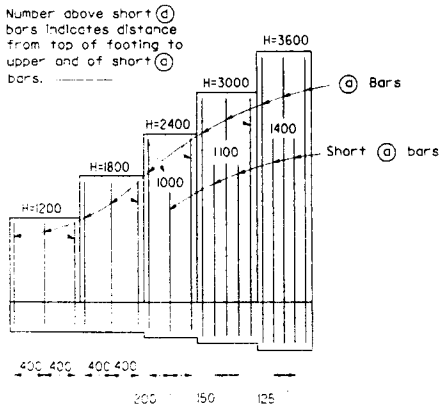

ELEVATION

NOTES

Design Conditions:

Design H may be exceeded by 150 mm before going to the next size.
Special footing design is required where foundation material is incapable of supporting toe pressure loads listed in table.

Design Data:

f_c = 10 MPa f'_c = 25 MPa f_s = 168 MPa n = 10 earth = 19 kN/m³
Case I- Wall design for equivalent fluid pressure = 4.2 and 5.6 kPa/m.
Case II, III, IV - Wall design is based on Rankine's formula with ø = 33°-42°.

TABLE OF REINFORCING STEEL DIMENSIONS AND DATA

Design H		⊙ 1200	1800	2400	3000	3600
W		1250	1550	2000	2450	2900
F Spread Ftg		400	400	450	450	550
Batter		None	None	None	100:3	100:3
	ⓐ Bars	#16@400	#16@400	#16@400	#16@300	#16@250
Short	ⓒ Bars	None	None	#16@400	#16@300	#16@250
	ⓑ Bars	#16@400	#16@400	#16@200	#16@150	#16@125
Total	ⓔ Bars	8-#19	8-#19	10-#19	8-#19	6-#19
Toe Pressure	Case I kPa	80	105	120	145	170
	Case II kPa	75	100	130	165	195
	Case III kPa	80	110	140	185	210
	Case IV kPa	95	155	200	255	310

STATE OF CALIFORNIA
DEPARTMENT OF TRANSPORTATION

RETAINING WALL TYPE 5

NO SCALE

ALL DIMENSIONS ARE IN MILLIMETERS UNLESS OTHERWISE SHOWN

RSP B3-7 DATED DECEMBER 4, 1997 SUPERSEDES STANDARD PLAN B3-7 DATED JULY 1, 1997-PAGE 162 OF THE STANDARD PLANS BOOK DATED JULY 1997.

REVISED STANDARD PLAN RSP B3-7

Caltrans Metric

James C. Moore
December 4, 1997
PLANS APPROVAL DATE
C16576 6-30-01

To accompany plans dated _____

Use reinf for H= 1200 1800 2400

STD. PLAN RSP B3-7

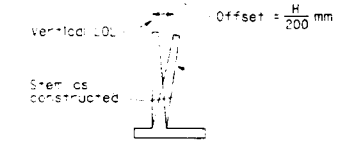

APPROXIMATE WALL OFFSET VALUES

Not required for wall Types 3 and 4.

Values for offsetting forms to be determined by the Engineer.

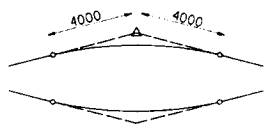

8000 mm VC AT TOP OF WALL SLOPE CHANGE

Where shown on the plans

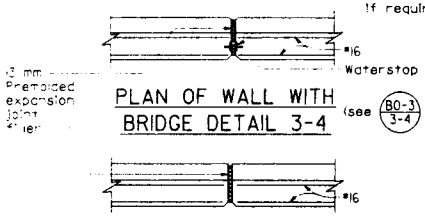

PLAN OF WALL WITH BRIDGE DETAIL 3-4

(see B0-3 3-4)

PLAN OF WALL WITH EXPANSION JOINT ONLY

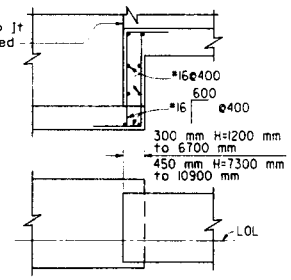

FOOTING STEP

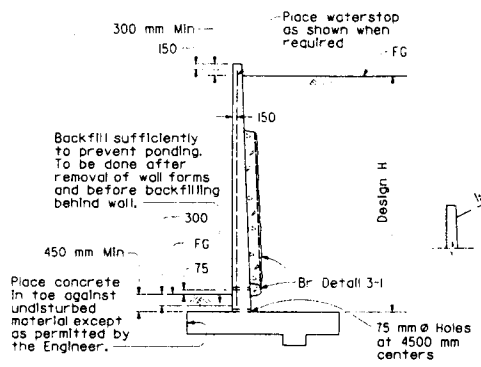

DESIGN AND DRAINAGE

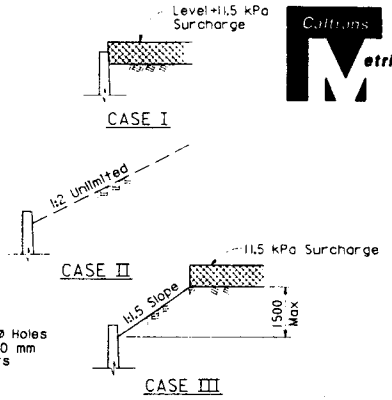

DETAIL OF DESIGN LOADING CASES

CASE I	Level +11.5 kPa Surcharge
CASE II	1:2 Unlimited Slope
CASE III	1:1.5 Limited Slope (1500 Max height) +11.5 kPa Surcharge

NOTE: Surcharge Limits Shown Apply To Retaining Walls Type 1 and 3.

Caltrans Metric

James C. Moore
December 4, 1997
PLANS APPROVAL DATE

James C. Moore
C16576
6-30-01

The State of California or its officers or agents shall not be responsible for the accuracy or completeness of electronic copies of this plan sheet.

To accompany plans dated _____

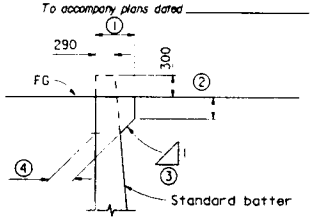

Dimensions ①, ② and ③ to be as shown elsewhere in the Project Plans.

④ Stem width at base of haunch to be determined as shown.

STEM WIDTH AT BASE OF HAUNCH

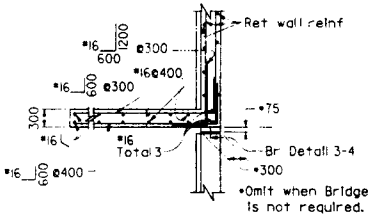

PLAN

(For return wall Type "A")

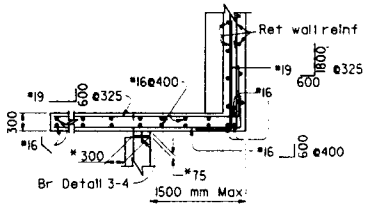

PLAN

(For return wall Type "B")

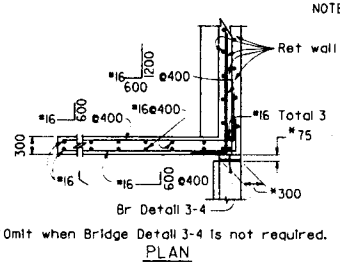

*Omit when Bridge Detail 3-4 is not required.

PLAN

(For return wall Type "C")

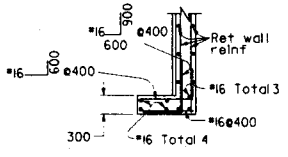

PLAN

(For return wall Type "D")

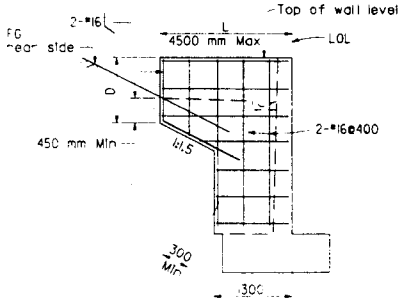

ELEVATION

RETURN WALL TYPE "A"

Use where H≤2400 mm or less

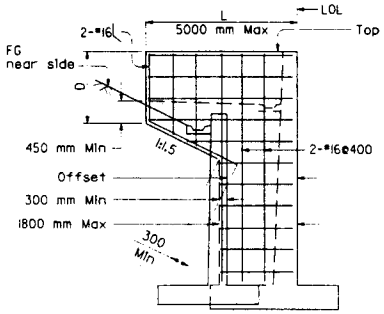

ELEVATION

RETURN WALL TYPE "B"

Use where H=3000 mm or more on offset walls

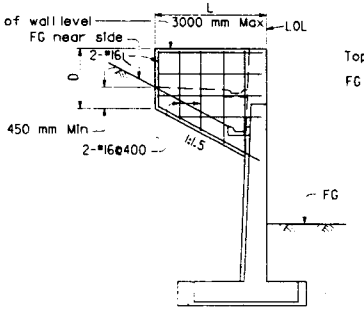

ELEVATION

RETURN WALL TYPE "C"

Use where H=3000 or more on straight walls

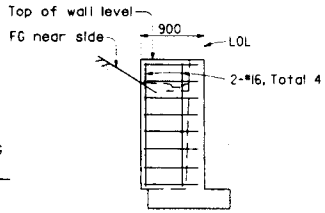

ELEVATION

RETURN WALL TYPE "D"

Use where H≤1800 or less

NOTES

Design Conditions:

Design H may be exceeded by 150 millimeters before going to the next size. Special footing design is required where foundation material is incapable of supporting toe pressure listed in table.

Return wall not required unless shown elsewhere.

Design Data:

f_c = 10 MPa f'_c = 25 MPa f_s = 168 MPa

n = 10 earth = 19 kN/m3

11.5 kPa surcharge:

Equivalent fluid pressure =

5.6 kPa/m maximum for determination of toe pressure.

4.2 kPa/m minimum for determination of heel pressure.

Earth pressures for 1:2 unlimited slope, 1:1.5 slope, and 1:1.5 unlimited slope, determined from Rankine's formula with Ø=33°-42'.

STATE OF CALIFORNIA
DEPARTMENT OF TRANSPORTATION

RETAINING WALL DETAILS NO. 1

NO SCALE

ALL DIMENSIONS ARE IN MILLIMETERS UNLESS OTHERWISE SHOWN

RSP B3-8 DATED DECEMBER 4, 1997 SUPERSEDES STANDARD PLAN B3-8 DATED JULY 1, 1997-PAGE 163 OF THE STANDARD PLANS BOOK DATED JULY 1997.

REVISED STANDARD PLAN RSP B3-8

STD. PLAN RSP B3-8

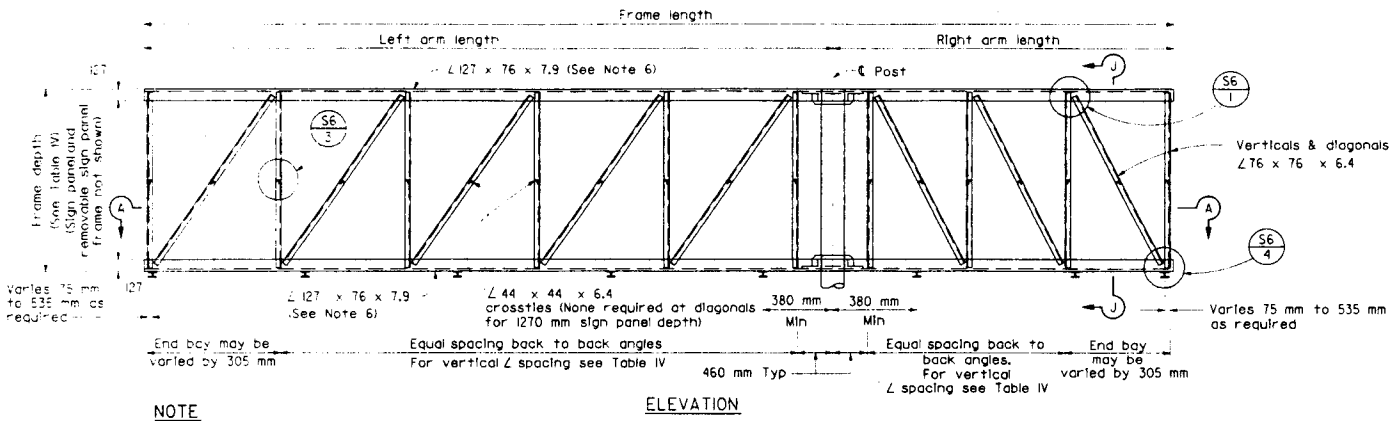

ELEVATION

NOTE

Left arm may be shorter, longer or equal to right arm length

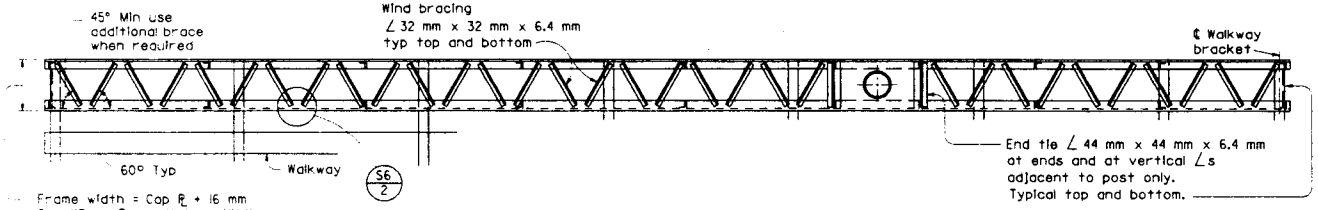

SECTION A-A

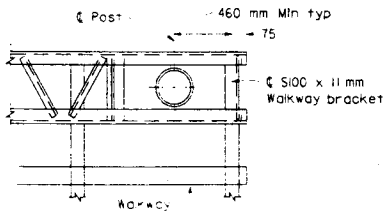

PART PLAN OF CANTILEVER TYPE AT POST

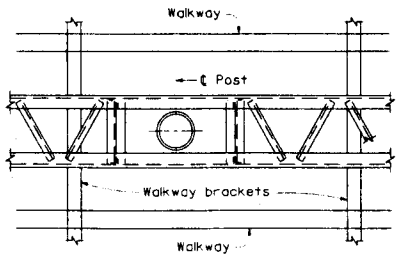

PART PLAN OF DOUBLE FACED TYPE AT POST

NOTES

1. For connection of frame to post see (S7)
2. For walkway see (S9) and (S10)
3. For walkway length see (S1)
4. Minimum length of frame = 3.66 m.
5. Maximum length of frame = 18.29 m.
6. For arm lengths 10.67 m to 12.19 m and sign depths 2032 mm thru 3048 mm:
   a. Use 127 x 76 x 12.7 chord ∠ s.
   b. Frame width = Cap plate + 25.4 mm.
7. Diagonal not required if arm length is equal to or less than shown in this column see table IV.

(S) Standard Plan sheet number
Detail number

Caltrans Metric

Jeffrey B. Woody
December 4, 1997
PLANS APPROVAL DATE

The State of California or its officers or agents shall not be responsible for the accuracy or completeness of electronic copies of this plan sheet.

Jeffrey B. Woody C41260 3-31-99

To accompany plans dated _____

Sign Panel Depth (mm)	Frame Depth (mm)	Maximum Vertical ∠ Spacing (mm)	See Note 7 (mm)
1270	1423	1375	1220
1524	1675	1525	1220
1778	1931	1675	1220
2032	2185	1830	1525
2286	2439	2135	1525
2540	2693	2135	1830
2794	2693	2135	1830
3048	2693	2135	1830

TABLE IV

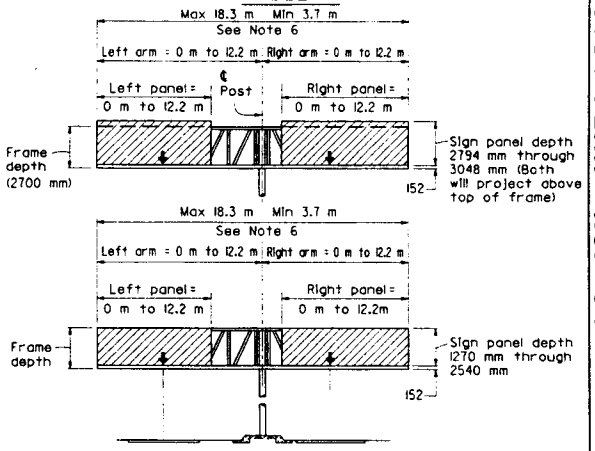

RANGE OF STRUCTURE SIZES

STATE OF CALIFORNIA
DEPARTMENT OF TRANSPORTATION

OVERHEAD SIGNS-TRUSS SINGLE POST TYPE STRUCTURAL FRAME MEMBERS

NO SCALE

ALL DIMENSIONS ARE IN MILLIMETERS UNLESS OTHERWISE SHOWN

RSP S4 DATED DECEMBER 4, 1997 SUPERSEDES STANDARD PLAN S4 DATED JULY 1, 1997-PAGE 193 OF THE STANDARD PLANS BOOK DATED JULY 1997.

REVISED STANDARD PLAN RSP S4

STD. PLAN RSP S4

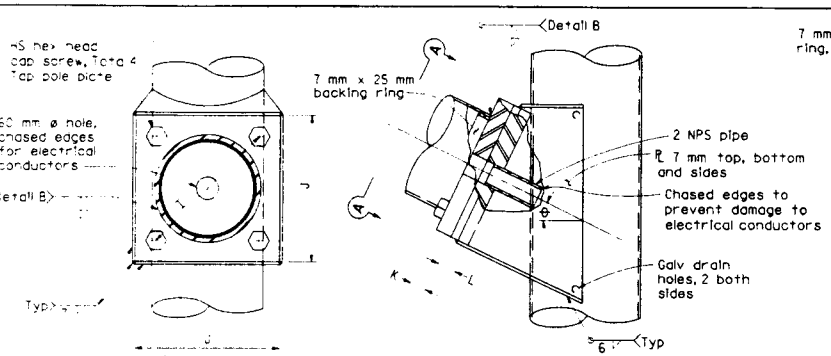

SIGNAL ARM CONNECTION DETAILS
FOR 6.1 m, 7.6 m AND 9.1 m ARMS

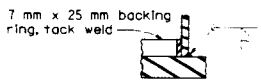

DETAIL B

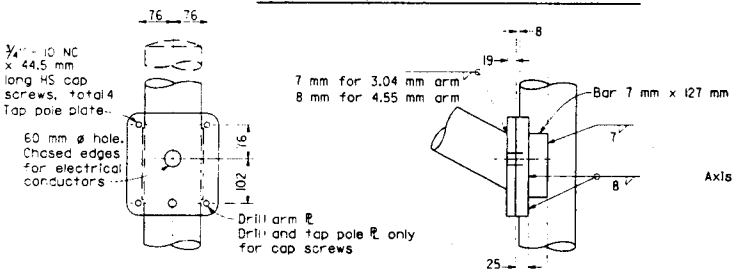

SIGNAL ARM CONNECTION DETAILS
FOR 4.6 m AND 5.5 m ARMS

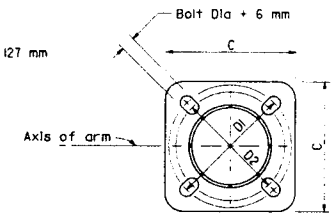

BASE PLATE

ES-6S ES-6T

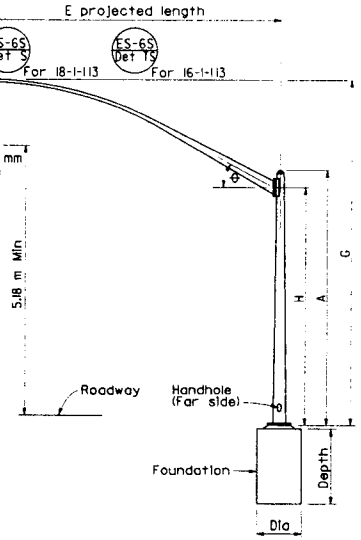

ELEVATION
TYPE 16-1-113
TYPE 18-1-113

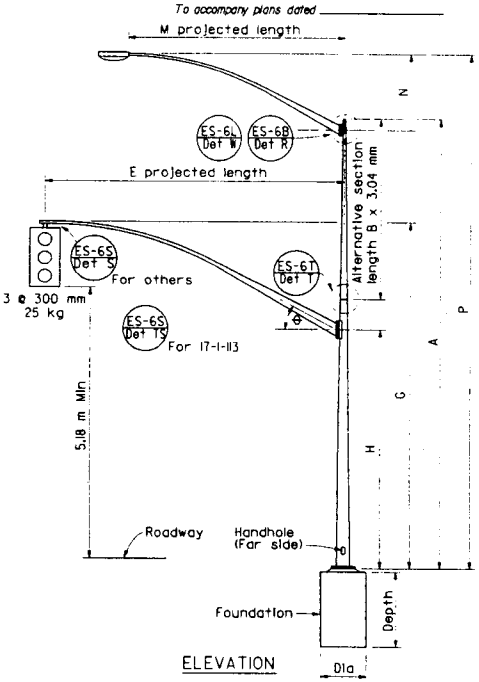

ELEVATION
TYPE 17A-1-113, 17B-1-113,
17D-1-113, 17E-1-113, 19-1-113, 19A-1-113

SIGNAL ARM DATA										
E Projected Length	G Mounting Height	H	Min OD At Pole	Thickness	I Bolt Circle	HS Cap Screws	J Plate Size	K Arm PL Thickness	L Pole PL Thickness	ø
(m)			(mm)							
4.6	6.8±	5.3	117	3.04	← (see details on this sheet) →					
5.5	7.1±		133							
6.			165							
7.6	6.9±	4.9	185		279	1"-8NC x 63.5	267	25	31	23°
9.1	7.0±	4.9	203							

LUMINAIRE ARM DATA					
M Projected Length	N Rise	Min OD at Pole	Thickness	P Mounting Height 9.1 Pole	P Mounting Height 10.7 Pole
(m)	(mm)			(m)	
1.8	610±	83	3.04	9.6±	11.1±
2.4	760±	89		9.8±	11.3±
3.1	990±	98		10.0±	11.5±
3.7	1290±			10.3±	11.8±
4.6	1450±	108		10.4±	12.0±

Pole Type	Load Case	Wind Velocity km/h	POLE DATA: A Height	Min OD Base	Min OD Top	Thickness	Alternative Section B Length	Alternative Section Bottom	Alternative Section Top	BASE PLATE DATA: C	D1	D2	Thickness	Anchor Bolts Size	Anchor Bolts Bolt Circle	Luminaire Arm	Signal Arm	CIDH PILE FOUNDATION Diameter	Depth	Reinforced
			(m)	(mm)			(m)	(mm)		(mm)						(m)		(mm)	(m)	
16-1-113			5.6		140		None			304	292	279		25 ø x 915 x 102		None	4.6 - 6.1	760		
17E-1-113																1.8-4.6 3.7	4.6			
17D-1-113			9.	203	98		3.1	133	98	304	292	279	25	32 ø x 1067 x 102	279	1.8-4.6 3.7	5.5	1070	1.5	No
17B-1-113																1.8-4.6 4.6	6.1			
17A-1-113			10.7		113		4.6		114							1.8-4.6 4.6	4.6 5.5 or 6.1			
18-1-113			5.2	238	177		None	92	0	406	381		32	38 ø x1067x 152	381	None		760	1.8	Yes (ES-6T)
19-1-113			9.		133		3.1		133							1.8-4.6 3.7	7.6 or 9.1			
19A-1-113			10.7	273	150		4.6	203	150							1.8-4.6 4.6				

☐ indicates arm length to be used unless otherwise noted on plans.

STATE OF CALIFORNIA
DEPARTMENT OF TRANSPORTATION

SIGNAL AND LIGHTING STANDARDS
CASE 1 ARM LOADING
WIND VELOCITY=113 km/h
ARM LENGTHS 4.6 m TO 9.1 m

NO SCALE

ALL DIMENSIONS ARE IN MILLIMETERS UNLESS OTHERWISE SHOWN

RSP ES-6J DATED DECEMBER 4, 1997 SUPERSEDES STANDARD PLAN ES-6J DATED JULY 1, 1997-PAGE 266 OF THE STANDARD PLANS BOOK DATED JULY 1997.

REVISED STANDARD PLAN RSP ES-6J

December 4, 1997
PLANS APPROVAL DATE

To accompany plans dated _____

STD. PLAN RSP ES-6J

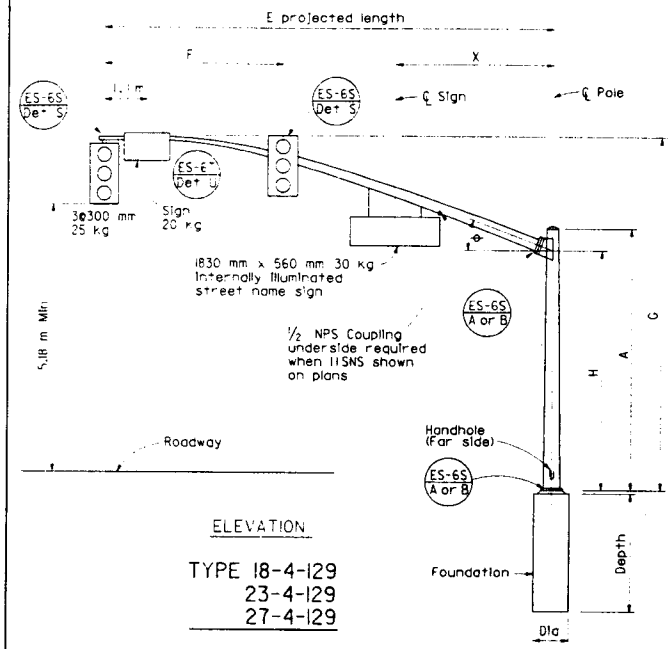

ELEVATION

TYPE 18-4-129
23-4-129
27-4-129

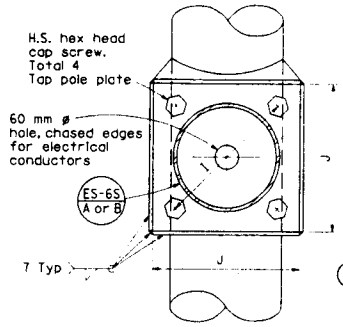

SECTION A-A

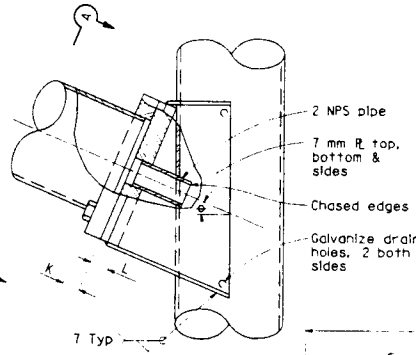

ELEVATION

SIGNAL ARM CONNECTION DETAILS

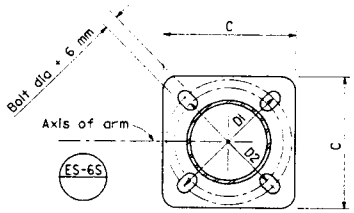

BASE PLATE

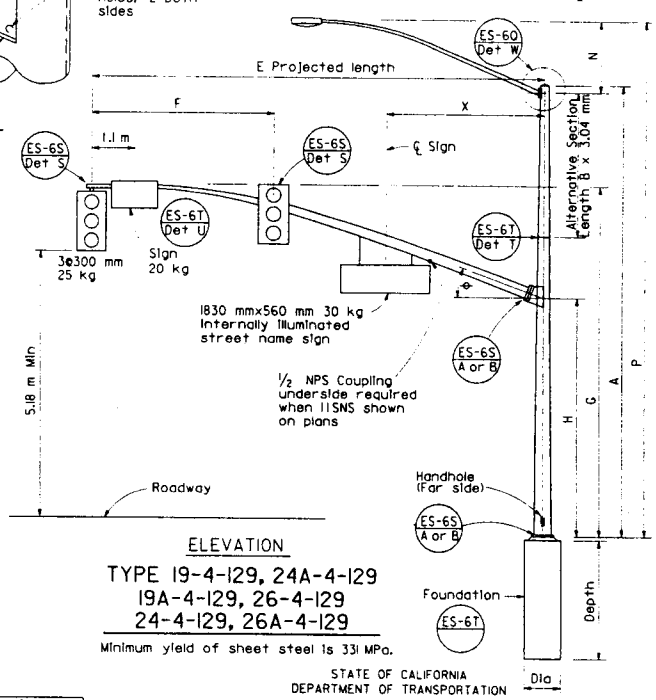

ELEVATION

TYPE 19-4-129, 24A-4-129
19A-4-129, 26-4-129
24-4-129, 26A-4-129

Minimum yield of sheet steel is 331 MPa.

STATE OF CALIFORNIA
DEPARTMENT OF TRANSPORTATION

Caltrans Metric

December 4, 1997

Jeffrey B. Woody C41260 3-31-99

To accompany plans dated _____

SIGNAL AND LIGHTING STANDARDS
CASE 4 ARM LOADING
WIND VELOCITY=129 km/h
ARM LENGTHS 7.6 m TO 13.7 m

NO SCALE

ALL DIMENSIONS ARE IN MILLIMETERS UNLESS OTHERWISE SHOWN

RSP ES-6R DATED DECEMBER 4, 1997 SUPERSEDES STANDARD PLAN ES-6R DATED JULY 1, 1997-PAGE 275 OF THE STANDARD PLANS BOOK DATED JULY 1997.

REVISED STANDARD PLAN RSP ES-6R

STD. PLAN RSP ES-6R

SIGNAL ARM DATA

E Projected Length	F Min. Spacing	G Mounting Height	H	Min OD At Pole	Thickness	I Bolt Circle	HS Cap Screws	J Plate Size	K Arm PL Thickness	L Pole PL Thickness	ø	X Max
(m)				(mm)								(m)
7.6	3.1	6.9±	4.88	186	6.07	305	1¼"-7NC x 76	305	32	38	23°	3.2
9.1	3.7	7.01±		203								
10.7	4.3			221		300		300			21°	
12.2	4.6			238	6.07	330		330	44	44	15°	4.0
13.7		7.2±		256								

LUMINAIRE ARM DATA

M Projected Length	N Rise	Min OD at Pole	Thickness	P Mounting Height 9.1 Pole	P Mounting Height 10.7 Pole
(m)	(mm)			(m)	
1.8	610±	83	3.04	9.6±	11.1±
2.4	760±	89		9.8±	11.3±
3.1	990±	98		10.0±	11.5±
3.7	1290±			10.3±	11.8±
4.6	1450±	108		10.5±	12.0±

Pole Type	Load Case	Wind Velocity km/h	POLE DATA: A Height	Min OD Base	Min OD Top	Thickness	Alternative Section B Length	Alternative Section Bottom	Alternative Section Top	BASE PLATE DATA: C	D1	D2	Thickness	Anchor Bolts Size	Anchor Bolts Bolt Circle	Luminaire Arm	Signal Arm	CIDH PILE FOUNDATION Diameter	Depth	Reinforced
			(m)	(mm)			(m)	(mm)		(mm)						(m)		(mm)	(m)	
18-4-129	4	129	5.2	273	214	6.07	None			432	419	381	32	45 ø x 1067 x 152	419	None	7.6 or 9.1	760	2.40	Yes (ES-6T)
19-4-129			9.1	289	186		3.1	221	186							1.8-4.6 3.7		920		
19A-4-129			10.7		168		4.6		168							1.8-4.6 4.6				
23-4-129			5.2	305	229		None	238		457	445	406	38		445	None	10.7			
24-4-129			9.1		203		3.1		203							1.8-4.6 3.7				
24A-4-129			10.7		186		4.6		186							1.8-4.6 4.6				
26-4-129			9.1		203		3.1		203							1.8-4.6 3.7				
26A-4-129			10.7	308	186	7.94	4.6		186			432		51ø x 1067 x 152		1.8-4.6 4.6	12.2 or 13.7	920	2.7	
27-4-129			5.2		250		None									None				

☐ Indicates arm length to be used unless otherwise noted on plans.

POLE TYPE	POLE DATA				BASE PLATE DATA				"d" 610 mm ø CIDH Pile (m)	STRUCT. STEEL IN kg PLUS 3.5% GALV.
	HEIGHT "h" (m)	MIN O. D. (mm)		THICKNESS (mm)	"C" (mm)	THICKNESS (mm)	ANCHOR BOLTS (mm)			
		BASE	TOP				SIZE	BC=BOLT CIRCLE		
CCTV 25	7.62	187	98	4.55	305	25.4	25.4 x 920 x 102	267	1.83	180
CCTV 30	9.14	203	98	4.55	305	25.4	25.4 x 920 x 102	279	2.13	215
CCTV 35	10.67	219	98	4.55	305	25.4	25.4 x 920 x 102	305	2.13	250
CCTV 40	12.19	238	98	4.55	330	25.4	32 x 920 x 102	330	2.13	295
CCTV 45	13.72	254	98	4.55	330	25.4	32 x 920 x 102	343	2.44	340

Caltrans Metric

December 4, 1997

Jeffrey B. Woody C41260 3-31-99

To accompany plans dated _____

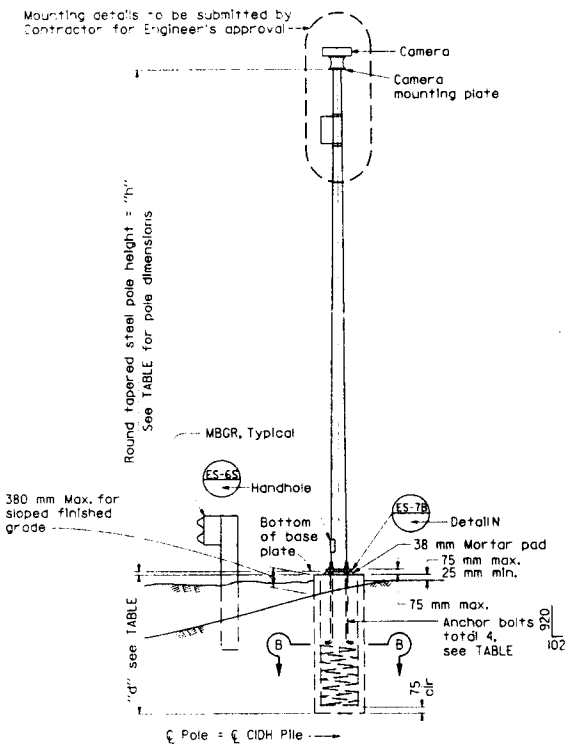

ELEVATION

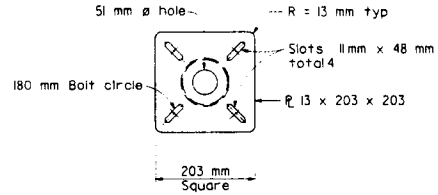

CAMERA MOUNTING PLATE

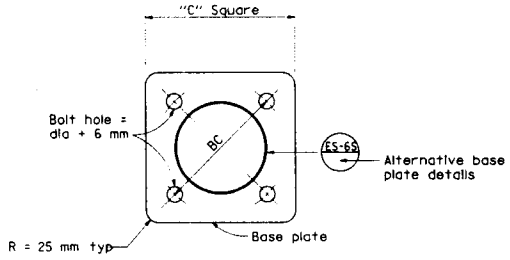

BASE PLATE

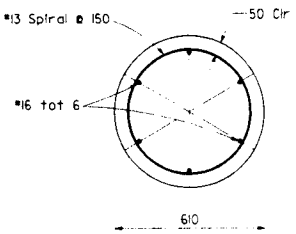

SECTION B-B

GENERAL NOTES:

SPECIFICATIONS
DESIGN : AASHTO specifications for the design and construction of structural supports for highway signs, dated 1994.

Loading
WIND LOADINGS : 129 km/h AASHTO
Unit Stresses
STRUCTURAL STEEL : fy = 331 MPa tapered steel tube (Pole)
fy = 248 MPa unless noted otherwise noted
Anchor bolts = A307
REINFORCED CONCRETE : f'c = 22.4 MPa
fy = 276 MPa

NOTES:

1. The Contractor shall verify all controlling field dimensions before ordering or fabricating any material.
2. All steel shall be galvanized after fabrication.
3. During pole erection, the post shall be raked as necessary with the use of leveling nuts to provide a plumb pole axis.

STATE OF CALIFORNIA
DEPARTMENT OF TRANSPORTATION

CLOSED CIRCUIT TELEVISION POLE DETAILS

NO SCALE

ALL DIMENSIONS ARE IN MILLIMETERS UNLESS OTHERWISE SHOWN

RSP ES-34A DATED DECEMBER 4, 1997 SUPERSEDES STANDARD PLAN ES-34A DATED JULY 1, 1997-PAGE 306 OF THE STANDARD PLANS BOOK DATED JULY 1997.

REVISED STANDARD PLAN RSP ES-34A

STD. PLAN RSP ES-34A

GENERAL ROAD WORK

MISCELLANEOUS

- ☐ A10A Abbreviations
- ☐ A10B Symbols
- ☐ A20A Pavement Markers and Traffic Lines, Typical Details
- ☐ A20B Pavement Markers and Traffic Lines, Typical Details
- ☐ A20C Pavement Markers and Traffic Lines, Typical Details
- ☐ A20D Pavement Markers and Traffic Lines, Typical Details
- ☐ A24A Pavement Markings- Arrows
- ☐ A24B Pavement Markings- Arrows
- ☐ A24C Pavement Markings- Symbols and Numerals
- ☐ A24D Pavement Markings- Words
- ☐ A24E Pavement Markings- Words and Crosswalks
- ☐ A35A Portland Cement Concrete Paving Details
- ☐ A40 Rumble Strip Details
- ☐ A62A Excavation and Backfill- Miscellaneous Details
- ☐ A62B Limits of Payment for Excavation and Backfill Bridge- Surcharge and Wall
- ☐ A62C Limits of Payment for Excavation and Backfill- Bridge
- ☐ A62D Excavation and Backfill- Concrete Pipe Culverts
- ☐ A62E Excavation and Backfill- Cast-In-Place Reinforced Concrete Box and Arch Culverts
- ☐ A62F Excavation and Backfill- Metal and Plastic Culverts
- ☐ A73A Object Markers
- ☐ A73B Markers
- ☐ A73C Delineators, Channelizers and Barricades
- ☐ A74 Survey Monuments
- ☐ A75A Concrete Barrier Type 50
- ☐ A75B Concrete Barrier Type 50E
- ☐ A75D Concrete Headlight Glare Screen
- ☐ *RSP A76A CONCRETE BARRIER TYPE 60*
- ☐ A76B Concrete Barrier Type 60
- ☐ A76C Concrete Barrier Type 60E
- ☐ A76D Concrete Barrier Type 60G
- ☐ A76E Concrete Barrier Type 60G
- ☐ A76F Concrete Barrier Type 60GE
- ☐ *RSP A76G CONCRETE BARRIER TYPE 60S*
- ☐ A76H Concrete Barrier Type 60S
- ☐ A76I Concrete Barrier Type 60SE
- ☐ A77A Metal Beam Guard Railing
- ☐ A77B Metal Beam Guard Railing- Standard Hardware
- ☐ *RSP A77C METAL BEAM GUARD RAILING - POST AND BLOCKS*
- ☐ A77D Guard Railing Flares
- ☐ A77E Guard Railing Flares
- ☐ A77F Metal Beam Guard Railing- Miscellaneous Details
- ☐ A77G Guard Railing End Anchors (Breakaway)
- ☐ A77GA Anchor Assembly (Breakaway, Type M)-Hardware and Post Details
- ☐ A77H Guard Railing End Anchors- Breakaway Hardware
- ☐ A77I Barrier and Guard Railing End Anchors
- ☐ A77J Guard Railing Connections to Bridge Railings, Retaining Walls and Abutments
- ☐ A77K Guard Railing Connections to Bridge Sidewalks and Curbs
- ☐ A78A Thrie Beam Barrier
- ☐ A78B Thrie Beam Barrier
- ☐ A78C Thrie Beam Barrier- Standard Hardware
- ☐ A78D Thrie Beam Barrier- Miscellaneous Details
- ☐ A78E Thrie Beam Barrier- End Anchors
- ☐ A78F Thrie Beam Barrier Connections to Bridge Railing
- ☐ A78G Thrie Beam Barrier Connections to Bridge Curbs, Retaining Walls and Abutments
- ☐ A78H Thrie Beam Barrier Connections to Concrete Barrier Type 50
- ☐ A78I Thrie Beam Barrier Connections to Concrete Barrier Type 60
- ☐ A81 Crash Cushion, Sand Filled
- ☐ A83 Portable Scale Pad and Approach Slab Details
- ☐ A85 Chain Link Fence
- ☐ A86 Barbed Wire and Wire Mesh Fences
- ☐ A87 Curbs, Dikes and Driveways
- ☐ A88 Curb Ramp Details
- ☐ A90 Accessible Parking

CRIB WALLS

- ☐ C7A Reinforced Concrete Crib Wall- Battered Wall- Types A,B and C
- ☐ C7B Reinforced Concrete Crib Wall- Battered Wall- Types D,E and F
- ☐ C7C Reinforced Concrete Crib Wall- Vertical Wall- Types A,B and C
- ☐ C7D Reinforced Concrete Crib Wall- Vertical Wall- Types D,E and F
- ☐ *RSP C7E REINFORCED CONCRETE CRIB WALL-TYPES A,B,C,D,E AND F-HEADER AND STRECHER DETAILS*
- ☐ *RSP C7F DESIGN DATA FOR REINFORCED CONCRETE CRIB WALL FOUNDATION PRESSURE- BATTERED WALL*
- ☐ *RSP C7G REINFORCED CONCRETE CRIB WALL FOUNDATION PRESSURE- VERTICAL WALL*
- ☐ C8A Steel Crib Wall- Construction Details
- ☐ C8B Steel Crib Wall- Design Data
- ☐ *RSP C8C STEEL CRIB WALL- DESIGN DATA*
- ☐ C9A Timber Crib Wall- Types A,B,C and D
- ☐ *RSP C9B TIMBER CRIB WALL-TYPES A,B,C AND D-DESIGN DATA*

DRAINAGE

- ☐ D72 Drainage Inlets
- ☐ D73 Drainage Inlets
- ☐ D74A Drainage Inlets
- ☐ D74B Drainage Inlets
- ☐ D74C Drainage Inlet Details
- *D75 IS DELETED AND REPLACED WITH NSP D75A, NSP D75B AND NSP D75C)*
- ☐ *RSP D77A Grate Details*
- ☐ D77B Bicycle Proof Grate Details
- ☐ D77C Alternative Hinged Cover for Type OL and OS Inlets and Trash Rack for Type OCP Inlet
- ☐ D78 Gutter Depressions
- ☐ D79 Precast Reinforced Concrete Pipe- Direct Design Method
- ☐ D80 Cast-In-Place Reinforced Concrete Single Box Culvert
- ☐ D81 Cast-In-Place Reinforced Concrete Double Box Culvert
- ☐ D82 Cast-In-Place Reinforced Concrete Box Culvert Miscellaneous Details
- ☐ D84 Box Culvert Wingwalls- Types A,B and C
- ☐ *RSP D85 BOX CULVERT WINGWALLS-TYPES D AND E*
- ☐ D86A Box Culvert Warped Wingwalls
- ☐ D86B Pipe Culvert Headwalls, Endwalls and Warped Wingwalls
- ☐ D86C Arch Culvert Headwalls, Endwalls and Warped Wingwalls
- ☐ D87A Overside Drains
- ☐ D87B Overside Drains
- ☐ D87C Underdrains
- ☐ D88 Construction Loads on Culverts
- ☐ D88A Strut Details for Structural Steel Plate Pipes, Arches, and Vehicular Undercrossings
- ☐ D89 Pipe Headwalls
- ☐ D90 Pipe Culvert Headwalls, Endwalls and Wingwalls-Types A,B and C
- ☐ D93A Pipe Riser Connections
- ☐ D93B Drainage Inlet Riser Connections
- ☐ D93C Pipe Riser with Debris Rack Cage
- ☐ D94A Metal and Plastic Flared End Sections
- ☐ D94B Concrete Flared End Sections
- ☐ D95 Concrete Arch Culverts
- ☐ D97A Corrugated Metal Pipe Coupling Details No. 1- Annular Coupling Band Bar and Strap and Angle Connectors
- ☐ D97B Corrugated Metal Pipe Coupling Details No. 2- Hat Band Coupler and Flange Details
- ☐ D97C Corrugated Metal Pipe Coupling Details No. 3- Helical and Universal Couplers
- ☐ D97D Corrugated Metal Pipe Coupling Details No. 4- Hugger Coupling Bands
- ☐ D97E Corrugated Metal Pipe Coupling Details No. 5- Standard Joint
- ☐ D97F Corrugated Metal Pipe Coupling Details No. 6- Positive Joint
- ☐ D97G Corrugated Metal Pipe Coupling Details No. 7- Positive Joints and Downdrains
- ☐ D97H Reinforced Concrete Pipe or Non-Reinforced Concrete Pipe Standard and Positive Joints
- ☐ D98A Slotted Corrugated Steel Pipe Drain Details
- ☐ D98B Slotted Corrugated Steel Pipe Drain Details
- ☐ D99A Structural Section Drainage System Details
- ☐ D99B Edge Drain Outlet and Vent Details
- ☐ D99C Edge Drain Cleanout and Vent Details
- ☐ D99D Cross Drain Interceptor Details

HIGHWAY PLANTING

- ☐ H1 Planting and Irrigation- Abbreviations
- ☐ *RSP H2 PLANTING AND IRRIGATION- SYMBOLS*
- ☐ H3 Planting and Irrigation- Details
- ☐ H4 Planting and Irrigation- Details
- ☐ H5 Planting and Irrigation- Details
- ☐ H6 Planting and Irrigation- Details
- ☐ H7 Planting and Irrigation- Details

DIST.	COUNTY	ROUTE	KILOMETER POST TOTAL PROJECT	SHEET NO.	TOTAL SHEETS

The State of California or its officers or agents shall not be responsible for the accuracy or completeness of electronic copies of this plan sheet.

Caltrans Metric

To accompany plans dated _____

- ☐ H8 Planting and Irrigation- Details

TEMPORARY FACILITIES

- ☐ T1 Temporary Crash Cushion, Sand Filled
- ☐ T2 Temporary Crash Cushion, Sand Filled
- ☐ T3 Temporary Railing (Type K)
- ☐ T4 Temporary Traffic Screen
- ☐ T5 Temporary Terminal Section (Type K)
- ☐ T7 Construction Project Funding Identification Signs
- ☐ T10 Traffic Control System for Lane Closure on Freeways and Expressways
- ☐ T10A Traffic Control System for Lane and Complete Closures on Freeways and Expressways
- ☐ T11 Traffic Control System for Lane Closure on Multilane Conventional Highways
- ☐ T12 Traffic Control System for Lane Closure on Multilane Conventional Highways
- ☐ T13 Traffic Control System for Lane Closure on Two Lane Conventional Highways
- ☐ T14 Traffic Control System for Ramp Closures
- ☐ T15 Traffic Control System for Moving Lane Closure on Multilane Highways
- ☐ T16 Traffic Control System for Moving Lane Closure on Multilane Highways
- ☐ T17 Traffic Control System for Moving Lane Closure on Two Lane Highways

BRIDGE

- ☐ B0-1 Bridge Details
- ☐ B0-3 Bridge Details
- ☐ B0-5 Bridge Details
- ☐ B0-13 Bridge Details
- ☐ B2-3 400 mm Cast-In-Drilled-Hole Concrete Pile
- ☐ B2-5 Pile Details- Class 400 and Class 625
- ☐ B2-6 Pile Details- Class 400C and Class 625C
- ☐ B2-8 Pile Details- Class 900 and Class 900C
- ☐ B2-9 Load Test Pile Details (1)
- ☐ B2-10 Load Test Pile Details (2)
- ☐ B2-11 Load Test Pile Details (3)
- ☐ *RSP B3-1 RETAINING WALL TYPE 1- H=1200 THROUGH 9100 mm*
- ☐ B3-2 Retaining Wall Type 1- H=9700 Through 10 900 mm
- ☐ *RSP B3-3 RETAINING WALL-TYPE 1A*
- ☐ B3-4 Retaining Wall- Type 2
- ☐ B3-5 Counterfort Retaining Wall- Type 3
- ☐ B3-6 Counterfort Retaining Wall- Type 4
- ☐ *RSP B3-7 RETAINING WALL-TYPE 5*
- ☐ *RSP B3-8 RETAINING WALL DETAILS No.1*
- ☐ B3-9 Retaining Wall Details No. 2
- ☐ B3-11 Retaining Wall Type 6- 1829 mm Maximum
- ☐ B6-1 T-Beam Details
- ☐ B6-10 Utility Openings, T-Beam
- ☐ B6-21 Joint Seals (Maximum Movement Rating = 50 mm)
- ☐ B7-1 Box Girder Details
- ☐ B7-5 Deck Drains
- ☐ B7-6 Deck Drains- Type D-1 and D-2
- ☐ B7-10 Utility Opening- Box Girder
- ☐ B7-11 Utility Details
- ☐ B8-5 Cast-In-Place Prestressed Girder Details
- ☐ B11-7 Chain Link Railing
- ☐ B11-47 Cable Railing
- ☐ B11-51 Tubular Hand Railing
- ☐ B11-52 Chain Link Railing Type 7
- ☐ B11-53 Concrete Barrier Type 25
- ☐ B11-54 Concrete Barrier Type 26

SHEET 1 OF 2
STANDARD PLANS LIST
(July, 1997 Edition)
REVISED DECEMBER 4, 1997

WEB SITE ADDRESS: http://www.dot.ca.gov/hq/esc/oe/project_plans/stplans.htm

The Standard Plan sheets applicable to this contract include, but are not limited to those indicated by a marked box.
The Revised Standard Plans (RSP) and New Standard Plans (NSP) which apply to this contract are included as individual sheets of the project plans.

USERNAME = [illegible]
DGN FILE = [illegible]

CONTRACT NO.

☐ B13-1 Slope Protection Details
☐ B14-1 Structural Steel Plate Vehicular Undercrossing
☐ B14-3 Communication and Sprinkler Control Conduit (Conduit less than size 103)
☐ B14-4 Water Supply Line (Bridge) (Pipe less than NPS 4)
☐ B14-5 Water Supply Line (Details) (Pipe less than NPS 4)

ROADSIDE SIGNS

☐ RS1 Roadside Signs, Typical Installation Details No. 1
☐ RS2 Roadside Signs, Wood Post, Typical Installation Details No. 2
☐ RS3 Roadside Signs, Laminated Wood Box Post, Typical Installation Details No. 3
☐ RS4 Roadside Signs, Typical Installation Details No. 4

OVERHEAD SIGNS

OVERHEAD SIGNS-TRUSS

☐ S1 Overhead Signs- Truss, Instructions and Examples
☐ S2 Overhead Signs- Truss, Single Post Type, Post Types II thru VII
☐ S3 Overhead Signs- Truss, Two Post Type, Post Types I-S thru VII-S
☐ *RSP S4 OVERHEAD SIGNS-TRUSS, SINGLE POST TYPE, STRUCTURAL FRAME MEMBERS*
☐ S5 Overhead Signs- Truss, Two Post Type, Structural Frame Members
☐ S6 Overhead Signs- Truss, Structural Frame Details
☐ S7 Overhead Signs- Truss, Frame Juncture Details
☐ S8A Overhead Signs- Steel Frame Removable Sign Panel Frames
☐ S8B Overhead Signs- Removable Sign Panel Frames, Overhead Formed Panel Mounting Details
☐ S8C Overhead Signs- Truss, Sign Panel Mounting Details, Laminated Panel- Type A
☐ S8D Overhead Signs- Truss, Removable Sign Panel Frames 2.794 m and 3.048 m Sign Panels
☐ S9 Overhead Signs- Walkway Details No. 1
☐ S10 Overhead Signs- Walkway Details No. 2
☐ S11 Overhead Signs- Walkway Safety Railing Details
☐ S13 Overhead Signs- Truss Pile Foundation

OVERHEAD SIGNS-LIGHTWEIGHT

☐ S14A Overhead Signs- Lightweight Balanced-Single Steel Post Connection and Mounting Details
☐ S14B Overhead Signs- Lightweight Balanced-Single Steel Post Details
☐ S15 Overhead Signs- Lightweight, Type A, Connection Details
☐ S16 Overhead Signs- Lightweight, Type B, Connection Details
☐ S17 Overhead Signs- Lightweight, Type C, Connection Details
☐ S18A Overhead Signs- Lightweight, Sign Panel Mounting Details, Laminated Panel- Type A
☐ S18B Overhead Signs- Lightweight, Light Fixture Mounting Details
☐ S20A Overhead Signs- Lightweight Post Details
☐ S20B Overhead Signs- Lightweight Foundation Details

OVERHEAD SIGNS-BOX BEAM CLOSED TRUSS ALTERNATIVE

☐ S39 Overhead Signs- Box Beam Closed Truss, Foundation Details
☐ S40A Overhead Signs- Box Beam Closed Truss, Two Post Type Frame Members
☐ S40B Overhead Signs- Box Beam Closed Truss, Single and Two Post Type, General Frame Details
☐ S40C Overhead Signs- Box Beam Closed Truss, Ribbed Sheet Metal Details
☐ S40D Overhead Signs- Box Beam Closed Truss, Two Post Type, Frame Details
☐ S40E Overhead Signs- Box Beam Closed Truss, Two Post Type, Frame Juncture Details
☐ S40F Overhead Signs- Box Beam Closed Truss, Two Post Type, Post Details
☐ S40G Overhead Signs- Box Beam Closed Truss, Single Post Type, Frame Members
☐ S40H Overhead Signs- Box Beam Closed Truss, Single Post Cantilever, Frame Details
☐ S40I Overhead Signs- Box Beam Closed Truss, Single Post Cantilever, Frame Juncture Details
☐ S40J Overhead Signs- Box Beam Closed Truss, Single Post Cantilever, Post Details
☐ S40K Overhead Signs- Box Beam Closed Truss, Single Post Butterfly, Frame Details
☐ S40L Overhead Signs- Box Beam Closed Truss, Single Post Butterfly, Frame Juncture Details
☐ S40M Overhead Signs- Box Beam Closed Truss, Single Post Butterfly, Post Details

OVERHEAD SIGNS-TUBULAR

☐ S40N Overhead Signs- Tubular, Instructions and Examples
☐ S40P Overhead Signs- Tubular, Single Post Type, Layout and Pipe Selection
☐ S40Q Overhead Signs- Tubular, Two Post Type, Layout and Pipe Selection
☐ S40R Overhead Signs- Tubular, Structural Frame Details No. 1
☐ S40S Overhead Signs- Tubular, Structural Frame Details No. 2
☐ S40T Overhead Signs- Tubular, Foundation Details

SIGNALS, LIGHTING AND ELECTRICAL SYSTEMS

☐ ES-1A Signal, Lighting and Electrical Systems- Symbols and Abbreviations
☐ ES-1B Signal, Lighting and Electrical Systems- Symbols and Abbreviations
☐ ES-2A Signal, Lighting and Electrical Systems- Service Equipment
☐ ES-2B Signal, Lighting and Electrical Systems- Service Equipment
☐ ES-2C Signal, Lighting and Electrical Systems- Service Equipment Notes
☐ ES-2D Signal, Lighting and Electrical Systems- Service Equipment and Typical Wiring Diagram, Type A
☐ ES-2E Signal, Lighting and Electrical Systems- Service Equipment and Typical Wiring Diagram, Type B
☐ ES-2F Signal, Lighting and Electrical Systems- Service Equipment and Typical Wiring Diagram, Type C
☐ ES-3A Signal, Lighting and Electrical Systems- Signal Heads and Mountings
☐ ES-3B Signal, Lighting and Electrical Systems- Signal Heads and Mountings
☐ ES-3C Signal, Lighting and Electrical Systems- Signal Heads and Mountings
☐ ES-3D Signal, Lighting and Electrical Systems- Signal Heads and Mountings
☐ ES-3E Signal, Lighting and Electrical Systems- Signal Heads and Mountings
☐ ES-4A Signal, Lighting and Electrical Systems- Controller Cabinet Details
☐ ES-4B Signal, Lighting and Electrical Systems- Controller Cabinet Details
☐ ES-4C Signal, Lighting and Electrical Systems- Controller Cabinet Details
☐ ES-4D Irrigation Controller Enclosure Cabinet
☐ ES-5A Signal, Lighting and Electrical Systems- Detectors
☐ ES-5B Signal, Lighting and Electrical Systems- Detectors
☐ ES-5C Signal, Lighting and Electrical Systems- Detectors
☐ ES-5D Signal, Lighting and Electrical Systems- Detectors
☐ ES-5E Signal, Lighting and Electrical Systems- Detectors
☐ ES-5F Signal, Lighting and Electrical Systems- Pedestrian Barricades
☐ ES-6A Signal and Lighting Standards- Type 1 Standards and Equipment Numbering
☐ ES-6AA Signal Standards- Push Button Posts
☐ ES-6B Lighting Standards- Types 15, 21 and 22
☐ ES-6C Lighting Standards- 24.4 m to 48.8 m High Mast Light Pole, Foundation Details
☐ ES-6D Lighting Standards- Types 30 and 31
☐ ES-6DA Lighting Standards- Type 32
☐ ES-6E Lighting Standards- Types 30 and 31, Base Details
☐ ES-6F Lighting Standards- 10 Degree Type
☐ ES-6H Lighting Standards- 10 Degree Type, Details
☐ *RSP ES-6J SIGNAL AND LIGHTING STANDARDS- CASE 1 ARM LOADING, WIND VELOCITY = 113 km/h, ARM LENGTHS 4.6 m TO 9.1 m*
☐ ES-6K Signal and Lighting Standards- Case 2 Arm Loading, Wind Velocity = 113 km/h, Arm Lengths 6.1 m to 9.1 m
☐ ES-6L Signal and Lighting Standards- Case 3 Arm Loading, Wind Velocity = 113 km/h, Arm Lengths 4.6 m to 13.7 m
☐ ES-6M Signal and Lighting Standards- Case 4 Arm Loading, Wind Velocity = 113 km/h, Arm Lengths 7.6 m to 13.7 m
☐ ES-6MA Signal and Lighting Standards- Case 5 Arm Loading, Wind Velocity = 113 km/h, Arm Lengths 15.2 m to 16.8 m
☐ ES-6N Signal and Lighting Standards- Type 40-0-129
☐ ES-6O Signal and Lighting Standards- Case 1 Arm Loading, Wind Velocity = 129 km/h, Arm Lengths 7.6 m to 9.1 m
☐ ES-6P Signal and Lighting Standards- Case 2 Arm Loading, Wind Velocity = 129 km/h, Arm Lengths 6.1 m to 9.1 m
☐ ES-6Q Signal and Lighting Standards- Case 3 Arm Loading, Wind Velocity = 129 km/h, Arm Lengths 6.1 m to 13.7 m

DIST.	COUNTY	ROUTE	KILOMETER POST TOTAL PROJECT	SHEET NO.	TOTAL SHEETS

Caltrans Metric

The State of California or its officers or agents shall not be responsible for the accuracy or completeness of electronic copies of this plan sheet.

To accompany plans dated ________

☐ *RSP ES-6R SIGNAL AND LIGHTING STANDARDS- CASE 4 ARM LOADING, WIND VELOCITY = 129 km/h, ARM LENGTHS 7.6 m TO 13.7 m*
☐ ES-6RA Signal and Lighting Standards- Case 5 Arm Loading, Wind Velocity = 129 km/h, Arm Lengths 15.2 m to 16.8 m
☐ ES-6RB Signal and Lighting Standards- Case 5 Arm Loading, Wind Velocity = 129 km/h, Arm Lengths 18.2 m to 19.8 m
☐ ES-6S Signal and Lighting Standards- Details No. 1
☐ ES-6T Signal and Lighting Standards- Details No. 2
☐ ES-6TA Signal and Lighting Standards- Pole and Mast Arm Alternatives
☐ ES-6U Lighting Standards- Type 15 Slip Base Insert
☐ ES-6V Signal and Sign Standards- Type 33 Left Turn
☐ ES-7A Signal, Lighting and Electrical Systems- Electrical Details, Structure Installations
☐ ES-7B Signal, Lighting and Electrical Systems- Electrical Details, Structure Installations
☐ ES-7C Signal, Lighting and Electrical Systems- Electrical Details, Structure Installations
☐ ES-7D Signal, Lighting and Electrical Systems- Electrical Details, Structure Installations
☐ ES-7E Signal, Lighting and Electrical Systems- Electrical Details, Structure Installations
☐ ES-7F Signal, Lighting and Electrical Systems- Flush Soffit Luminaire Modification Details, Structure Installations
☐ ES-8 Signal, Lighting and Electrical Systems- Pull Box Details
☐ ES-9A Signal, Lighting and Electrical Systems- Cantilever Flashing Beacon, Types 9, 9A and 9B
☐ ES-9B Signal, Lighting and Electrical Systems- Cantilever Flashing Beacon, Types 9, 9A and 9B
☐ ES-10 Signal, Lighting and Electrical Systems- Isolux Diagrams
☐ ES-11 Signal, Lighting and Electrical Systems- Foundation Installations
☐ ES-12 Signal, Lighting and Electrical Systems- Pedestrian Undercrossing Fluorescent Lighting Fixture
☐ ES-13 Signal, Lighting and Electrical Systems- Splicing Details
☐ ES-14 Signal, Lighting and Electrical Systems- Wiring Details and Fuse Ratings
☐ ES-15 Signal, Lighting and Electrical Systems- Pedestrian Overcrossing Fluorescent Lighting Fixture
☐ ES-27A Signal, Lighting and Electrical Systems- Extinguishable Message Sign, 250 mm Letters
☐ ES-27B Signal, Lighting and Electrical Systems- Extinguishable Message Sign, 250 mm Letters
☐ ES-28 Signal, Lighting and Electrical Systems- Extinguishable Message Sign and Flashing Beacons

SIGN ILLUMINATION

☐ ES-29 Sign Illumination- Mercury Sign Illumination Equipment
☐ ES-30 Sign Illumination- 915 mm Fluorescent Sign Illumination Equipment
☐ ES-32A Sign Illumination- Sign Illumination Equipment
☐ ES-32B Sign Illumination- Sign Illumination Control
☐ ES-33 Sign Illumination- Internally Illuminated Street Name Sign

CLOSED CIRCUIT TELEVISION

☐ *RSP ES-34A CLOSED CIRCUIT TELEVISION- POLE DETAILS*
☐ ES-34B Closed Circuit Television- Pole Details- Overhead Sign Mounted

NEW STANDARD PLANS

☐ *NSP D75A PIPE INLETS*
☐ *NSP D75B PIPE INLETS*
☐ *NSP D75C PIPE INLETS- LADDER, STEP AND TRASH RACK DETAILS*

SHEET 2 OF 2

STANDARD PLANS LIST

(July, 1997 Edition)

REVISED DECEMBER 4, 1997

WEB SITE ADDRESS: http://www.dot.ca.gov/hq/esc/projplan/ppintro.htm

The Standard Plan sheets applicable to this contract include, but are not limited to those indicated by a marked box.
The Revised Standard Plans (RSP) and New Standard Plans (NSP) which apply to this contract are included as individual sheets of the project plans.

USERNAME => [illegible]
DGN FILE => msp2_[illegible]

CONTRACT NO.