STATE OF CALIFORNIA-BUSINESS, TRANSPORTATION AND HOUSING AGENCY PETE WILSON, Governor

DEPARTMENT OF TRANSPORTATION
ESC/OE
1727 30TH STREET, 2ND FLOOR
SACRAMENTO, CA 95816

TDD (916) 654-4014

Errata #1

TO: All holders of the July 1995 edition of the Standard Plans Book

FROM: Engineering Service Center-Office of Office Engineer

SUBJECT: Errata

DATE: September 16, 1996

Attention is directed to the attached "Special Notice" regarding metric bar reinforcing steel.

The attached Revised Standard Plans (RSPs) and New Standard Plans (NSPs) dated February 15, May 29, and August 28, 1996 contain revisions and additions to the July 1995 edition of the Standard Plans Book.

Revised Standard Plans (RSPs) are to replace the comparable sheets in the July 1995 edition of the book. New Standard Plans (NSPs) are to supplement the July 1995 edition of the book.

The revisions or additions to the attached Revised Standard Plans (RSPs) and New Standard Plans (NSPs) are:

RSP A20A, " Pavement Markers and Traffic Lines-Typical Details", revises the length of laneline Detail 13 used in conjunction with laneline Detail 14 at exit ramps to the correct length (0.8 km).

RSP A20C, " Pavement Markers and Traffic Lines-Typical Details", revises the length of the repeating intervals for the pavement markers and taffic lines used for lane drop at exit ramp to the correct interval (0.8 km).

RSP A73A, " Object Markers", includes an added note which allows the use of metal or flexible post with the Type K markers. The type of post to be used will be indicated on the project plans.

RSP A75B, " Concrete Barrier Type 50E", is revised to delete Type 50F Concrete Barrier and replace it with Type 50 E Concrete Barrier.

RSP A77A, "Metal Beam Guard Railing", revises the dimensions of the steel block used with steel posts shown in Section B-B of the plan sheet.

RSP A77D, RSP A77E, RSP A77F, RSP A77G, RSP A78C and NSP A77GA, provide for the use of new Type M breakaway end anchors for new Type 1M and Type 8M flares used with metal beam guard railing. Type M breakaway anchor assemblies replace Type A breakaway cable anchor assemblies. Type 1M and Type 8M flares replace Type 1 and Type 8 flares, respectively.

NSP A88, " Curb Ramp Details", provides curb ramp designs which comply with the Americans With Disabilities Act requirements and which have been approved by the Division of the State Architect.

NSP A90, " Accessible Parking", provides accessible parking details which comply with the Americans With Disabilities Act requirements and which have been approved by the Division of the State Architect.

NSP T5, " Temporary Terminal Section (Type K)", provides details for attaching temporary railing (Type K) to concrete barrier (Type 50). It eliminates the need for sand barrel energy attenuators at the end of temporary railing (Type K) when used in conjunction with safety-shaped concrete barriers.

RSP B2-11, " Load Test Piles Detail (3)", revises the maximum tensile test force for Class 900 piles shown on the "Alternative "W" Steel Pipe - Pile Details".

RSP B3-7, " Retaining Wall Type 5", revises the "W" dimension to include the full width of the footing shown on the "Spread Footing Section" detail.

RSP RS1, " Roadside Signs-Typical Installation Details No. 1", revises the dimensions for sign mounting heights for permanent roadside signs so that they will be consistent with sign mounting heights for permanent roadside signs included in the Manual on Uniform Traffic Control Devices (MUTCD).

RSP S2, " Overhead Signs-Truss Single Post Type- Post Types II Through VII" and RSP S3, " Overhead Signs-Truss Two Post Type- Post Types I-S Through VII-S" are revised to include the use of gussets at the base of the sign post. The details for the gussets were inadvertently left off of the two sign plans for the 1995 edition of the Standard Plans book.

In addition to the attached 8-1/2" x 11" copies of the above listed Revised Standard Plans (RSPs) and New Standard Plan (NSPs), also attached is a list of new and revised standard plans issued subsequent to the publication of the July, 1995 Metric Standard Plans Book and the latest revised Standard Plans List for use with the July, 1995 metric edition of the Standard Plans Book.

Details from the July 1995 Standard Plans Book and details from New and Revised Standard Plans issued subsequent to the publication of the July 1995 edition of the Standard Plans Book are available for access by Caltrans personnel from the following location: /net/trws004/drv4/stdplans/metric/details/.

Details from the July 1995 Standard Plans Book and details from New and Revised Standard Plans issued subsequent to the publication of the July 1995 edition of the Standard Plans Book are also available to the world via the Caltrans OE-ESC Internet WEB site. To access the WEB site, utilize one of the following methods based on your network capabilities. Users located "outside" the local net, will have to use a login and password to look at and copy files from the site.

logon: anonymous
password: <return>

ftp:// trescftp.dot.ca.gov/pub/highway_plans/stdplans_metric/ or
http://tres.dot.ca.gov/office_engineer/stdplns.html
ftp 149.136.1.12 (use this for direct "ftp" access from an ftp site)

STATE OF CALIFORNIA-BUSINESS, TRANSPORTATION AND HOUSING AGENCY PETE WILSON, Governor

DEPARTMENT OF TRANSPORTATION
ESC/OE
1727 30TH STREET, 2ND FLOOR
SACRAMENTO, CA 95816

TDD (916) 654-4014

TO: All holders of the July 1995 edition of the Standard Plans Book

FROM: Engineering Service Center-Office of Office Engineer

SUBJECT: Special Notice

DATE: September 11, 1996

****

IMPORTANT

****

BAR REINFORCING STEEL SPECIAL NOTICE

****

The metric bar reinforcing steel contained in the July 1995 edition of the Standard Plans Book was based on the ASTM hard metric conversion. Hard conversion of imperial size bars to metric size bars was the standard during the preparation and publication of the July 1995 edition of the Standard Plans Book. A table for the substitution of imperial size bars for the hard converted metric bars with specific criteria for their use is provided for in the Department's Standard Special Provision for metric bar reinforcing steel.

Subsequent to the issuance of the July 1995 edition of the Standard Plans Book, the ASTM standards for metric bar reinforcing steel have changed to a soft conversion of imperial sized bars. The specification for soft converted bars, ASTM A706/A706M-96a, was approved March 10, 1996. The Department will use the ASTM standards for soft converted metric bars in future editions of the Standard Plans Book.

JLG 9/96
ESC/OE

The State of California or its officers or agents shall not be responsible for the accuracy or completeness of electronic copies of this plan sheet.

To accompany plans dated _____

California Metric

DIST	COUNTY	ROUTE	KILOMETER POST TOTAL PROJECT	SHEET NO.	TOTAL SHEETS

REGISTERED CIVIL ENGINEER

February 15, 1996
PLANS APPROVAL DATE

REGISTERED PROFESSIONAL ENGINEER Richard F. Ryan No. C47798 Exp. 12-31-99 CIVIL STATE OF CALIFORNIA

CENTERLINES
(2 LANE HIGHWAYS)

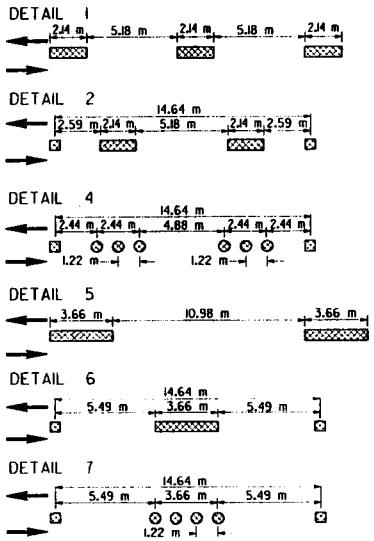

LANELINES
(MULTILANE HIGHWAYS)

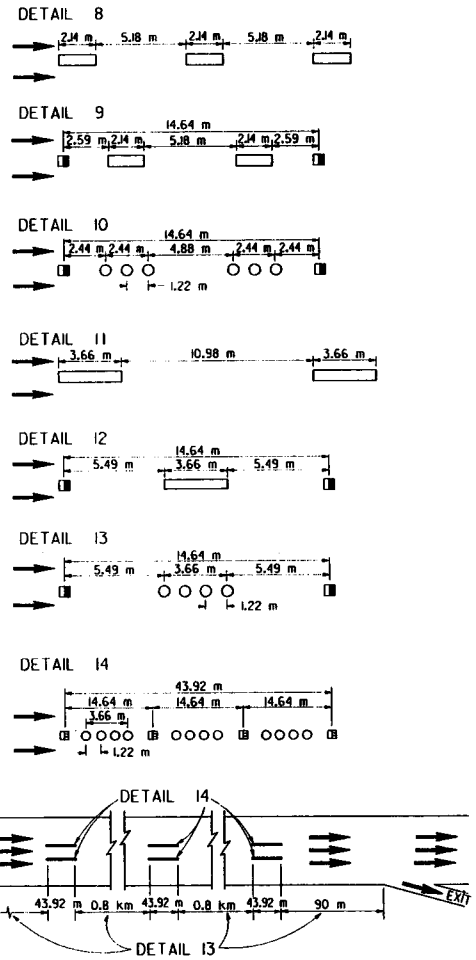

NO PASSING ZONES-ONE DIRECTION

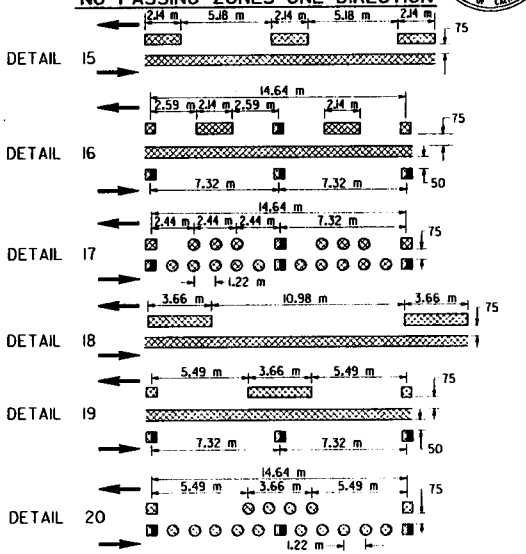

NO PASSING ZONES-TWO DIRECTIONS

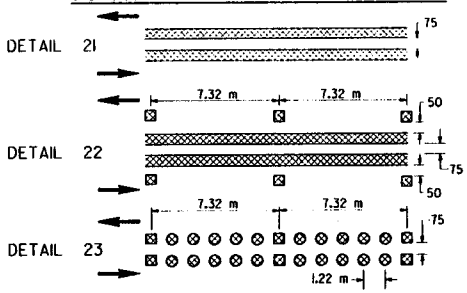

MARKER DETAILS

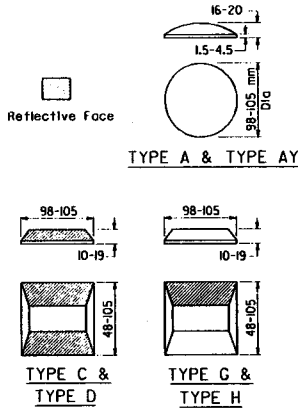

LEGEND

MARKERS

- TYPE A White Non-reflective
- TYPE AY Yellow Non-reflective
- TYPE C Red-clear Reflective
- TYPE D Two-way Yellow Reflective
- TYPE G One-way Clear Reflective
- TYPE H One-way Yellow Reflective

LINES

- 100 mm White
- 100 mm Yellow
- Direction of Travel

NOTES

1. Minimum projected area of reflective face = 65 square millimeters
2. Reflective markers need not be rectangular
3. Detail 3 deleted

RSP A20A DATED FEBRUARY 15, 1996 SUPERSEDES STANDARD PLAN A20A DATED JULY 3, 1995 - PAGE 3 OF THE STANDARD PLANS BOOK DATED JULY 1995.

STATE OF CALIFORNIA
DEPARTMENT OF TRANSPORTATION

PAVEMENT MARKERS AND TRAFFIC LINES TYPICAL DETAILS

NO SCALE

ALL DIMENSIONS ARE IN MILLIMETERS UNLESS OTHERWISE SHOWN

REVISED STANDARD PLAN RSP A20A

STD PLAN RSP A20A

DIST	COUNTY	ROUTE	KILOMETER POST TOTAL PROJECT	SHEET NO.	TOTAL SHEETS

To accompany plans dated _____

Metric

REGISTERED CIVIL ENGINEER

February 15, 1996
PLANS APPROVAL DATE

The State of California or its officers or agents shall not be responsible for the accuracy or completeness of electronic copies of this plan sheet.

Richard F. Ryan No. C47788 Exp. 12-31-99 CIVIL STATE OF CALIFORNIA

EXIT RAMP NEUTRAL AREA (GORE) TREATMENT

DETAIL 36

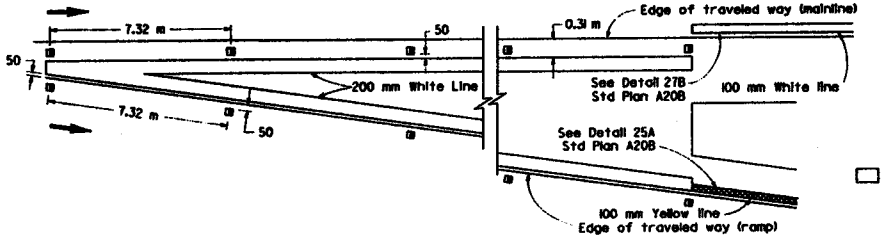

ENTRANCE RAMP NEUTRAL AREA (GORE) TREATMENT

DETAIL 36A

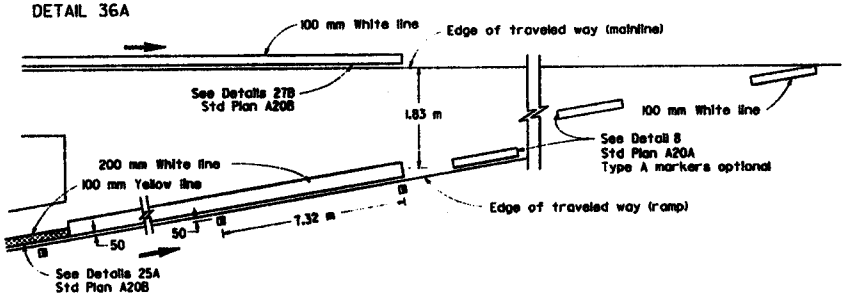

LANE DROP AT EXIT RAMPS

DETAIL 37

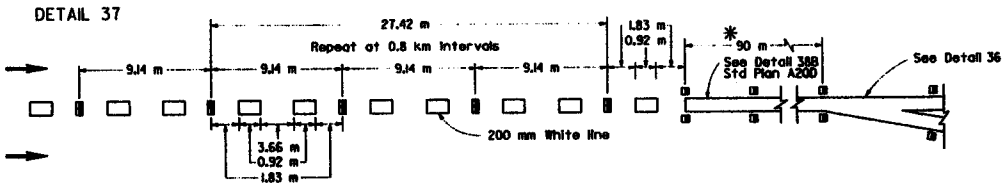

DETAIL 37A

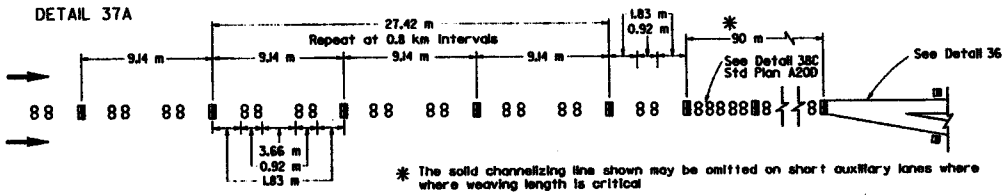

* The solid channelizing line shown may be omitted on short auxiliary lanes where where weaving length is critical

LANE DROP AT INTERSECTIONS

DETAIL 37B

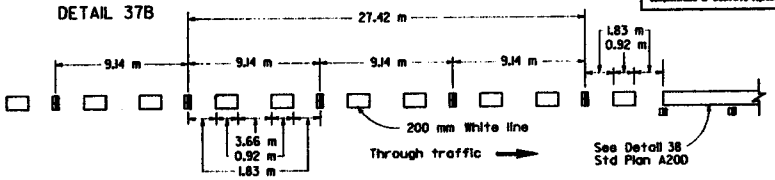

DETAIL 37C

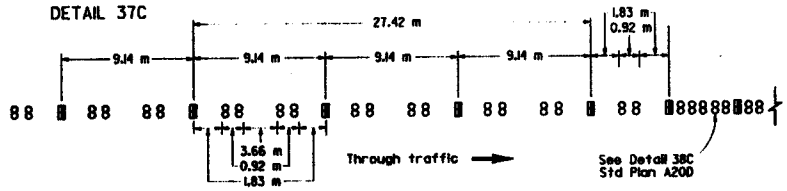

LEGEND

MARKERS

- TYPE A White Non-reflective
- TYPE C Red-clear Reflective
- TYPE G One-way Clear Reflective
- Direction of Travel

MARKER DETAILS

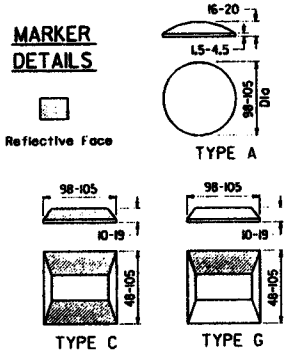

NOTES

1. Minimum projected area of reflective face = 65 square millimeters
2. Reflective markers need not be rectangular

STATE OF CALIFORNIA
DEPARTMENT OF TRANSPORTATION

PAVEMENT MARKERS AND TRAFFIC LINES TYPICAL DETAILS

NO SCALE

ALL DIMENSIONS ARE IN MILLIMETERS UNLESS OTHERWISE SHOWN

RSP A20C DATED FEBRUARY 15, 1996 SUPERSEDES STANDARD PLAN A20C DATED JULY 3, 1995 - PAGE 5 OF THE STANDARD PLANS BOOK DATED JULY 1995.

REVISED STANDARD PLAN RSP A20C

STD PLAN RSP A20C

To accompany plans dated _____

Caltrans Metric

DIST	COUNTY	ROUTE	KILOMETER POST TOTAL PROJECT	SHEET NO.	TOTAL SHEETS

REGISTERED CIVIL ENGINEER

May 29, 1996
PLANS APPROVAL DATE

The State of California or its officers or agents shall not be responsible for the accuracy or completeness of electronic copies of this plan sheet.

REGISTERED PROFESSIONAL ENGINEER Richard F. Ryan No. C47798 Exp. 12-31-99 CIVIL STATE OF CALIFORNIA

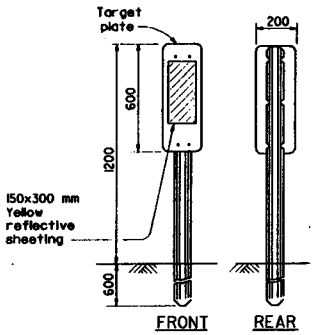

TYPE L-1
See Note 1

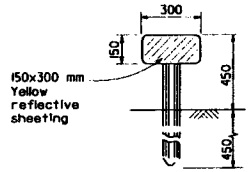

TYPE K-1
See Note 2

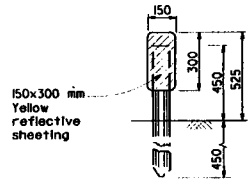

TYPE K-2
See Note 2

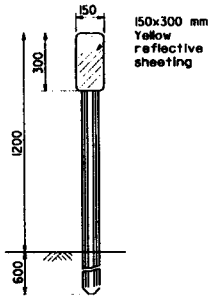

TYPE L-2
See Note 1

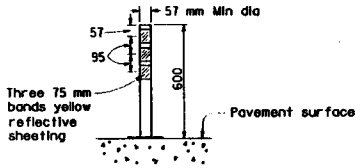

TYPE K-4
(Round flexible post surface mount)

NOTE

1. See Standard Plan A73B for metal post details and additional markers.
2. Posts for Type K-1 and K-2 object markers may either be metal or flexible, as shown on the project plans.

STATE OF CALIFORNIA
DEPARTMENT OF TRANSPORTATION

OBJECT MARKERS

NO SCALE

ALL DIMENSIONS ARE IN MILLIMETERS UNLESS OTHERWISE SHOWN

RSP A73A DATED MAY 29, 1996 SUPERSEDES STANDARD PLAN A73A DATED JULY 3, 1995 - PAGE 20 OF THE STANDARD PLANS BOOK DATED JULY 1995.

REVISED STANDARD PLAN RSP A73A

STD. PLAN RSP A73A

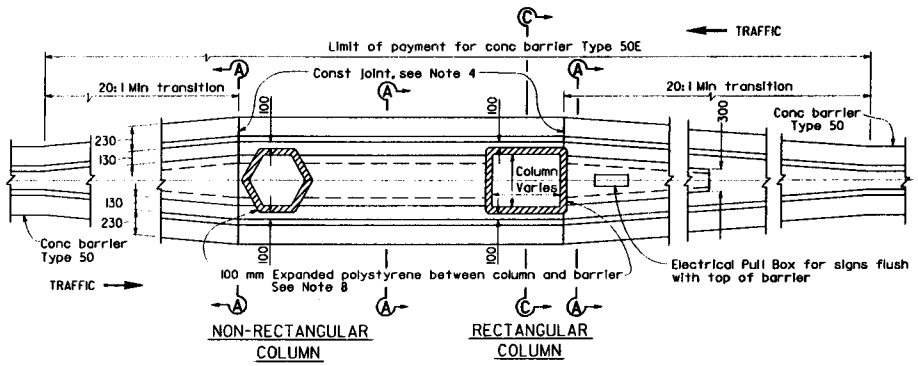

TRANSITION AT BRIDGE COLUMN

CONCRETE BARRIER TYPE 50E

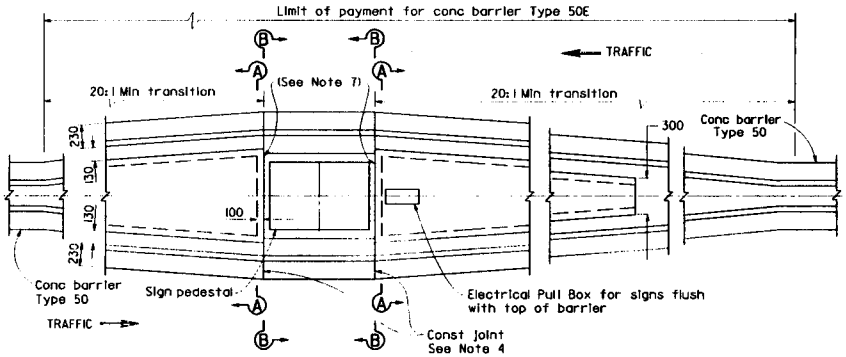

TRANSITION AT SIGN PEDESTAL

CONCRETE BARRIER TYPE 50E

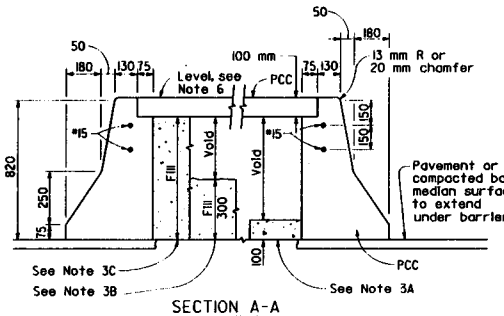

SECTION A-A

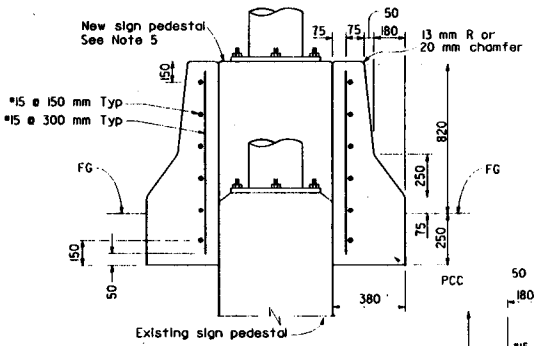

SECTION B-B

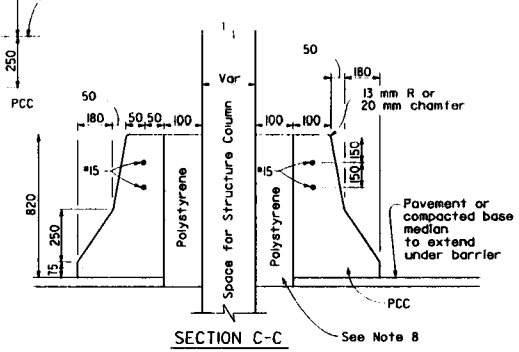

SECTION C-C

To accompany plans dated _____

Caltrans Metric

DIST	COUNTY	ROUTE	KILOMETER POST TOTAL PROJECT	SHEET NO.	TOTAL SHEETS

Donald E. Fogle
REGISTERED CIVIL ENGINEER

May 29, 1996
PLANS APPROVAL DATE

REGISTERED PROFESSIONAL ENGINEER Donald E. Fogle No. C34637 Exp. 9-30-96 CIVIL STATE OF CALIFORNIA

The State of California or its officers or agents shall not be responsible for the accuracy or completeness of electronic copies of this plan sheet.

NOTES

1. See Standard Plan A75A for concrete barrier Type 50.
2. See Standard Plan A75D for concrete headlight glare screen details.
3. Contractor options for fill between barrier walls:
   A. Place 100 mm PCC at base between barrier walls.
   B. Place 300 mm of granular material at base between walls.
   C. Place granular material from base to bottom of 100 mm cap.
   Forming material for 100 mm cap may remain in place.
4. Reinforcing steel shall extend continuous through construction joints.
5. See "Overhead Sign" plans for sign pedestal elevations on new construction.
6. Adjust height of barrier on low side of offset or superelevated roadways to provide level grade across top of Type 50E barrier.
7. 100 mm PCC vertical walls at existing sign pedestals.
8. Enclose column with 100 mm expanded polystrene at locations where concrete or cement treated base encases the column.

STATE OF CALIFORNIA
DEPARTMENT OF TRANSPORTATION

CONCRETE BARRIER TYPE 50E

NO SCALE

ALL DIMENSIONS ARE IN MILLIMETERS UNLESS OTHERWISE SHOWN

RSP A75B DATED MAY 29, 1996 SUPERSEDES STANDARD PLAN A75B DATED JULY 3, 1995 - PAGE 25 OF THE STANDARD PLANS BOOK DATED JULY 1995.

REVISED STANDARD PLAN RSP A75B

STD. PLAN RSP A75B

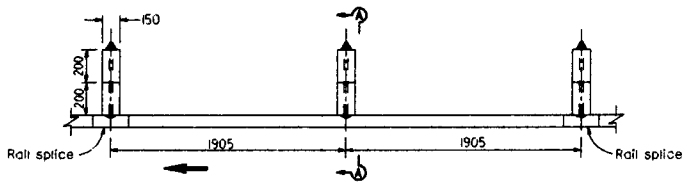

PLAN

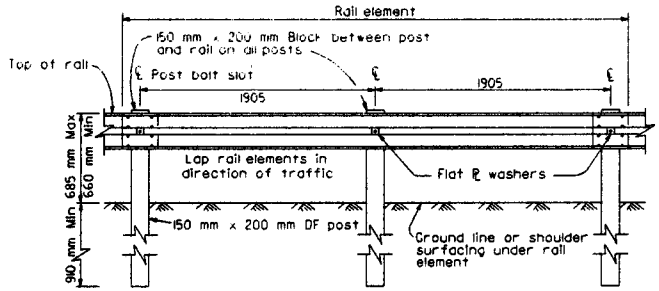

ELEVATION

METAL BEAM GUARD RAIL WITH WOOD POST AND BLOCKS

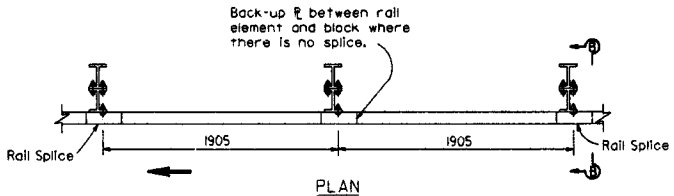

PLAN

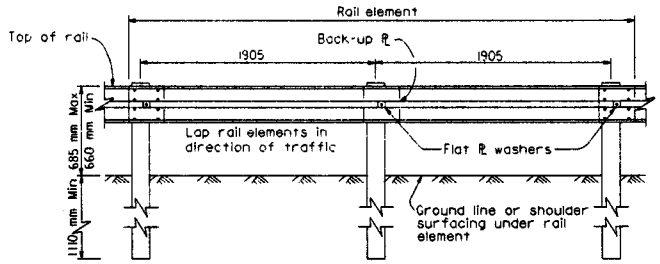

ELEVATION

METAL BEAM GUARD RAIL WITH MW150x14 STEEL POSTS AND BLOCKS

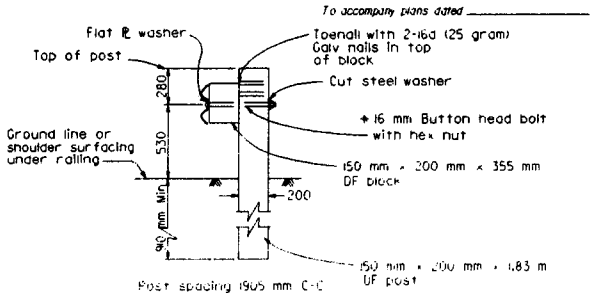

SECTION A-A

* Where bolt is reversed or 16 mm threaded rod is used to mount rail, no more than 13 mm of thread may be exposed on traffic side of rail.

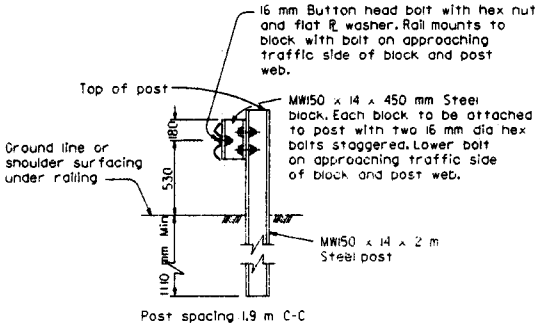

SECTION B-B

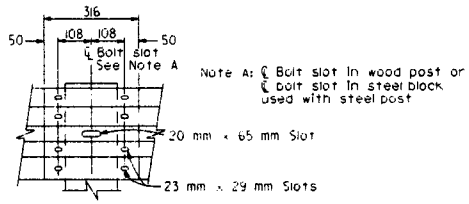

RAIL SPLICE DETAIL
ELEVATION VIEW

Splice the overlapped ends of the rail elements with 16 mm x 32 mm button head oval shoulder bolts and 16 mm x 32 mm recessed hex nut in the 23 mm x 29 mm slots. Total 8 per rail splice; 4 per terminal section and end section. Lap rail elements in direction of traffic.

Caltrans Metric

DIST	COUNTY	ROUTE	MILOMETER POST TOTAL PROJECT	SHEET NO.	TOTAL SHEETS

Donald E. Fogle
REGISTERED CIVIL ENGINEER

May 29, 1996
PLANS APPROVAL DATE

REGISTERED PROFESSIONAL ENGINEER Donald E. Fogle No. C34637 Exp. 9-30-96 CIVIL STATE OF CALIFORNIA

The State of California or its officers or agents shall not be responsible for the accuracy or completeness of electronic copies of this plan sheet.

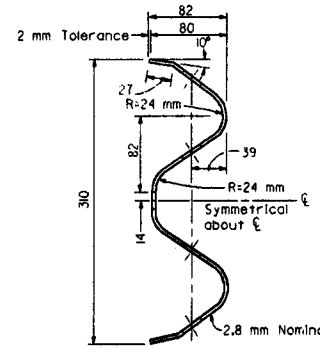

SECTION THRU
RAIL ELEMENT

NOTES

1. For details of standard hardware used to construct guard railing, see Standard Plan A77B.
2. For details of posts and blocks used to construct guard railing, see Standard Plan A77C.
3. Guard railing post spacing to be 1905 mm center to center, except as otherwise noted.
4. Top of rail to be 685 mm above the ground line or shoulder surfacing under the rail element.
5. For guard railing approach flares, see Standard Plans A77D and A77E.
6. For embankment widening details to accommodate guard railing approach flares, see Standard Plan A77F.
7. For guard railing end anchor details, see Standard Plans A77G and A77I.
8. For guard railing connection details to bridge railing, retaining walls and abutments, see Standard Plan A77J.
9. For guard railing connection details to bridge sidewalks and curbs, see Standard Plan A77K.
10. For dike positioning with guard railing installations, see Standard Plan A77F.
11. Direction of traffic indicated by ➡.

STATE OF CALIFORNIA
DEPARTMENT OF TRANSPORTATION

METAL BEAM GUARD RAILING

NO SCALE

ALL DIMENSIONS ARE IN MILLIMETERS UNLESS OTHERWISE SHOWN

RSP A77A DATED MAY 29, 1996 SUPERSEDES STANDARD PLAN A77A DATED JULY 3, 1995 - PAGE 27 OF THE STANDARD PLANS BOOK DATED JULY 1995.

REVISED STANDARD PLAN RSP A77A

STD. PLAN RSP A77A

DIST	COUNTY	ROUTE	KILOMETER POST TOTAL PROJECT	SHEET NO.	TOTAL SHEETS

To accompany plans dated _____

Metric

Donald E. Fogle
REGISTERED CIVIL ENGINEER

February 15, 1996
PLANS APPROVAL DATE

Donald E. Fogle
No. C34637
Exp. 9-30-99
CIVIL
STATE OF CALIFORNIA

The State of California or its officers or agents shall not be responsible for the accuracy or completeness of electronic copies of this plan sheet.

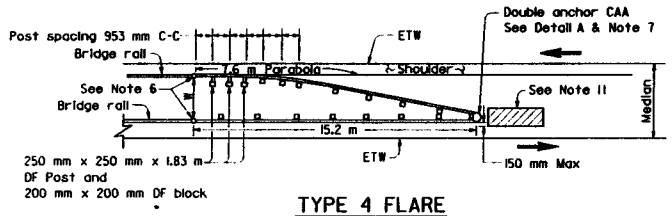

TYPE 4 FLARE
See Note 3

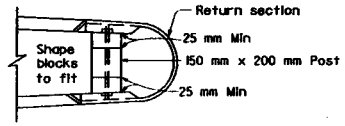

DETAIL A

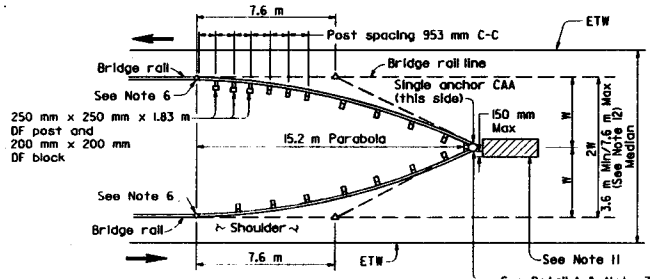

TYPE 3 FLARE
See Note 3

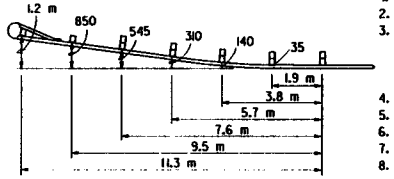

11.4 m PARABOLIC OFFSETS
(Parabolic offsets not to be used with Type IM flares)

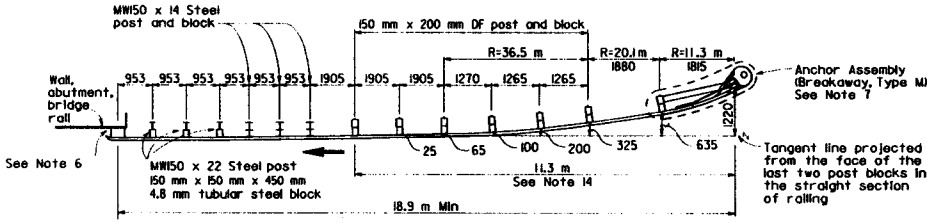

TYPE IM FLARE
(STEEL POST INSTALLATION)
See Notes 9 and 14

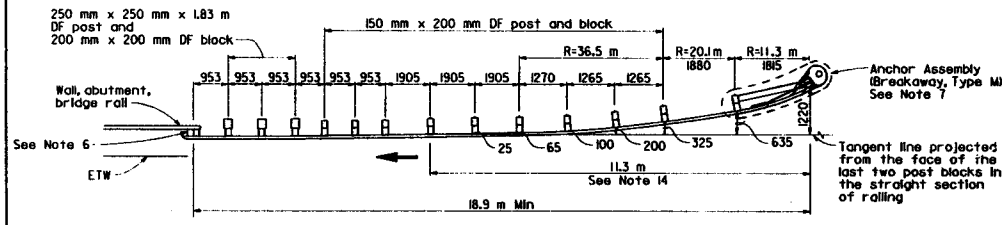

TYPE IM FLARE
(WOOD POST INSTALLATION)
See Notes 9 and 14

CAA = Cable Anchor Assembly

NOTES

1. Post, blocks and hardware to be used are shown on Standard Plans A77B and A77C.
2. Guard rail post spacing to be 1905 mm center to center, except as otherwise noted.
3. Except as noted, posts shown are 150 mm x 200 mm DF. MW150 x 14 steel posts and blocks may be specified for 150 mm x 200 mm DF posts and blocks where applicable. Where 250 mm x 250 mm DF posts and 200 mm x 200 mm DF blocks are shown. MW150 x 22 mm steel posts and tubular steel 150 mm x 150 mm x 450 mm (4.8 mm thick) blocks may be specified where applicable.
4. Top of rail to be 685 mm above ground line or shoulder surfacing under the rail element.
5. Direction of traffic indicated by ⟶
6. For connection details see Standard Plan A77J or A77K.
7. For end anchor details see Revised Standard Plan RSP A77G and Standard Plan A77I.
8. Terminal Sections not to be installed on trailing end of guard rail placed adjacent to one-way roadways.
9. The 11.3 m flared portion of Type IM Flare is used at approach end of guard railing for embankment installations.
10. For embankment widening details to accomodate approach flares, see Revised Standard Plan RSP A77F.
11. Sand filled crash cushion, as shown on Standard Plan A81, or other crash cushion approved by the Engineer is required for Type 3 and 4 flares, when the end of the guard rail is within 9.0 m of the edge of traveled way (ETW) of approaching traffic.
12. When width, w, exceeds 3.8 m; to calculate the length of parabolic flare use "L=3w" and round to nearest 3.8 m.
13. Type 2 Flare has been deleted.
14. For additional requirements for the 11.3 m flared portion of the Type IM flare installations see Revised Standard Plan RSP A77G and the Special Provisions.

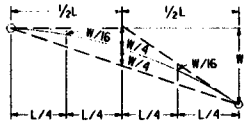

TYPICAL PARABOLIC LAYOUT

STATE OF CALIFORNIA
DEPARTMENT OF TRANSPORTATION

GUARD RAIL FLARES

NO SCALE

ALL DIMENSIONS ARE IN
MILLIMETERS UNLESS OTHERWISE SHOWN

RSP A77D DATED FEBRUARY 15, 1996 SUPERSEDES STANDARD PLAN A77D DATED JULY 3, 1995 - PAGE 30 OF THE STANDARD PLANS BOOK DATED JULY 1995.

REVISED STANDARD PLAN RSP A77D

STD. PLAN RSP A77D

DIST	COUNTY	ROUTE	KILOMETER POST TOTAL PROJECT	SHEET NO.	TOTAL SHEETS

Donald E. Fogle
REGISTERED CIVIL ENGINEER

February 15, 1996
PLANS APPROVAL DATE

Donald E. Fogle
No. C34637
Exp. 9-30-99
CIVIL
STATE OF CALIFORNIA

The State of California or its officers or agents shall not be responsible for the accuracy or completeness of electronic copies of this plan sheet.

To accompany plans dated _____

Metric

NOTES

1. Post, blocks and hardware to be used are shown on Standard Plan A77B and A77C.
2. Guard rail post spacing to be 1.905 m center to center, except as noted.
3. Except as noted, posts and blocks shown are 150 mm x 200 mm DF. MW150x14 steel posts and blocks may be specified where applicable. Where 250 mm x 250 mm DF posts and 200 mm x 200 mm DF blocks are shown, MW150x22 steel post and tubular steel 150 mm x 150 mm x 450 mm (4.8 mm thick) blocks may be specified where applicable.
4. Top of rail to be 685 mm above ground line or shoulder surfacing under the rail element.
5. A 1.2 m minimum clearance is required between face of rail and a fixed object located directly behind a guard rail post. A fixed object located behind the rail but not behind a guard rail post requires a 910 mm minimum clearance. Where minimum clearance cannot be obtained use approach railing transition details for fixed objects.
6. Direction of traffic indicated by ⟶.
7. For connection details see Standard Plans A77J and A77K.
8. For end anchor details see Revised Standard Plan RSP A77G and Standard Plan A77I .
9. Terminal sections will not be installed on trailing end of guard rail placed adjacent to one-way roadways.
10. Type 7 flare has been deleted.
11. Sand filled crash cushion, as shown on Standard Plan A81, or other crash cushion approved by the Engineer, is required for Type 5 and 6 flares, when the end of the guard rail is within 9.0 m of the edge of traveled way (ETW) of approaching traffic.
12. When width, w, exceeds 3.8 m; to calculate the length of parabolic flare use "L=3w" and round to nearest 3.8 m.
13. For additional requirements for the 11.3 m flared portion of the Type 8M flare installations see Revised Standard Plan RSP A77G and the Special Provisions.

ABBREVIATION

CAA = Cable Anchor Assembly

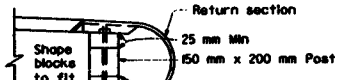

DETAIL A

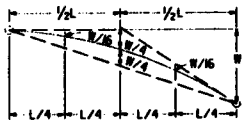

TYPICAL PARABOLIC LAYOUT

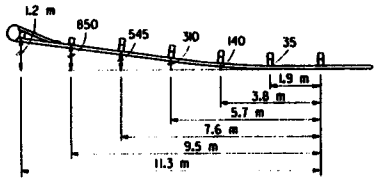

11.4 m PARABOLIC OFFSETS

(Parabolic offsets not to be used with Type 8M flares.)

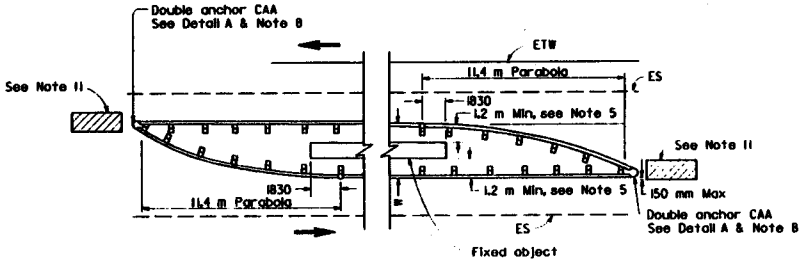

TYPE 5 FLARE

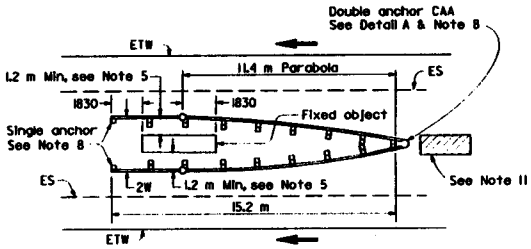

TYPE 6 FLARE

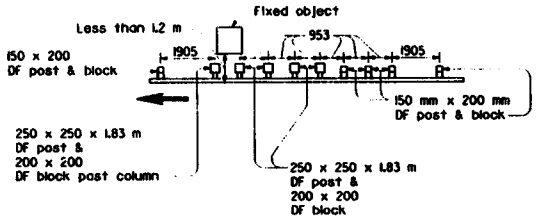

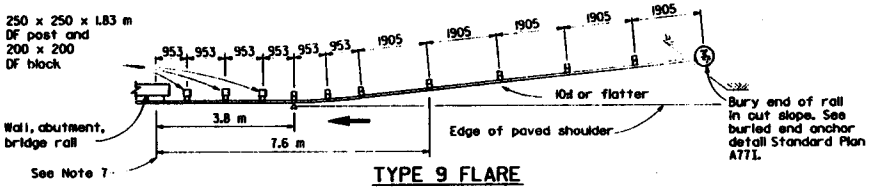

TYPE 9 FLARE

Use with Type 5, 6, and 8M flares when guard rail is less than 1.2 m from fixed object. See Note 5. For a series of columns, additional 250 mm x 250 mm x 1.83 m DF post at 953 mm center to center spacing to be used between columns. Where 250 mm x 250 mm DF posts and 200 mm x 200 mm DF blocks are shown, MW150x22 steel posts and tubular steel 150 mm x 150 mm x 450 mm (4.8 mm thick) blocks may be specified where applicable. Where 150 mm x 200 mm DF posts and blocks are shown, MW150x14 steel posts and blocks may be specified where applicable.

APPROACH RAILING TRANSITION DETAIL FOR FIXED OBJECT

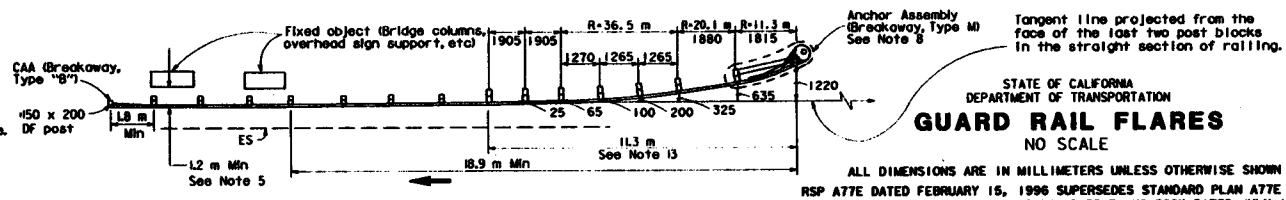

TYPE 8M FLARE

See Note 13

STATE OF CALIFORNIA
DEPARTMENT OF TRANSPORTATION

GUARD RAIL FLARES

NO SCALE

ALL DIMENSIONS ARE IN MILLIMETERS UNLESS OTHERWISE SHOWN

RSP A77E DATED FEBRUARY 15, 1996 SUPERSEDES STANDARD PLAN A77E DATED JULY 3, 1995 - PAGE 31 OF THE STANDARD PLANS BOOK DATED JULY 1995.

REVISED STANDARD PLAN RSP A77E

STD. PLAN RSP A77E

DIST	COUNTY	ROUTE	KILOMETER POST TOTAL PROJECT	SHEET NO.	TOTAL SHEETS

To accompany plans dated .....

Metric

Donald E. Fogle
REGISTERED CIVIL ENGINEER

February 15, 1996
PLANS APPROVAL DATE

The State of California or its officers or agents shall not be responsible for the accuracy or completeness of electronic copies of this plan sheet.

Donald E. Fogle No. C34637 Exp. 9-30-99 CIVIL STATE OF CALIFORNIA

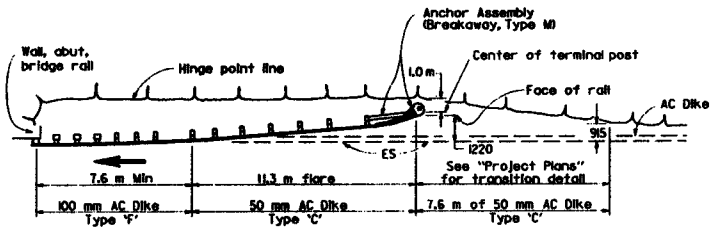

EMBANKMENT WIDENING AND DIKE PLACEMENT DIAGRAM

See Notes 1 and 2

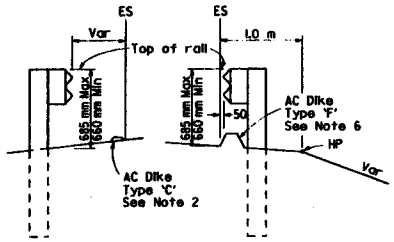

DIKE POSITIONING

(See Note 2)

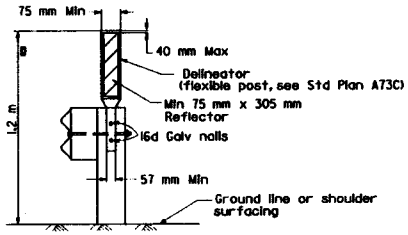

GUARD RAILING DELINEATION

See Note 4

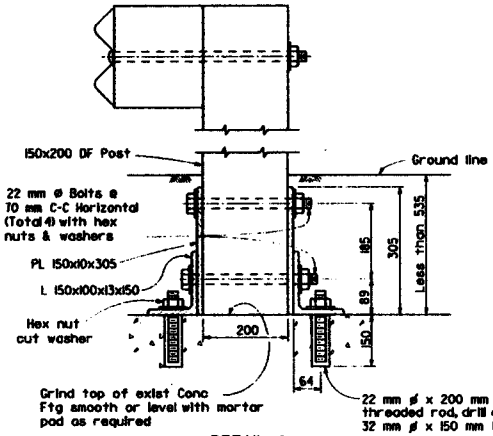

DETAIL A

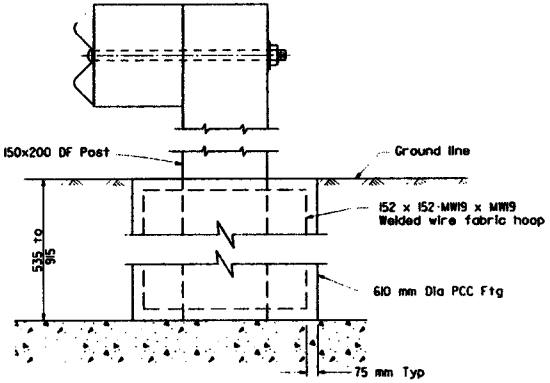

DETAIL B

Form socket in concrete to receive 150 mm x 200 mm post or place concrete around 150 mm x 200 mm post wrapped with one layer of 13 mm thick expanded polystyrene foam sheeting. Do not nail polystyrene to post. Post to be centered in concrete footing.

POST FOOTINGS

(See note 3)

Use where standard embedment of railing post is restricted by underground concrete facilities such as footing of walls, columns, etc. Use Detail A where embedment of post is less than 535 mm. Use Detail B where embedment of post is between 535 mm and 915 mm.

NOTES

1. For guard rail flare details, see Revised Standard Plans RSP A77D and RSP A77E.
2. When necessary to place dike in front of guard rail face, only Type 'C' dike may be used. For dike details, see Standard Plan A87.
3. For standard railing post embedment, see Standard Plan A77A.
4. Guard railing delineation to be used where shown on the project plans.
5. Direction of traffic indicated by ⟶
6. When dike or curb is placed under guard railing, the maximum height of the dike or curb shall be 100 mm. For dike and curb details, see Standard Plan A87.

STATE OF CALIFORNIA
DEPARTMENT OF TRANSPORTATION

METAL BEAM GUARD RAILING MISCELLANEOUS DETAILS

NO SCALE

ALL DIMENSIONS ARE IN MILLIMETERS UNLESS OTHERWISE SHOWN

RSP A77F DATED FEBRUARY 15, 1996 SUPERSEDES STANDARD PLAN A77F DATED JULY 3, 1995 - PAGE 32 OF THE STANDARD PLANS BOOK DATED JULY 1995.

REVISED STANDARD PLAN RSP A77F

STD. PLAN RSP A77F

DIST	COUNTY	ROUTE	KILOMETER POST TOTAL PROJECT	SHEET NO.	TOTAL SHEETS

Donald E. Fogle
REGISTERED CIVIL ENGINEER

February 15, 1996
PLANS APPROVAL DATE

The State of California or its officers or agents shall not be responsible for the accuracy or completeness of electronic copies of this plan sheet.

Donald E. Fogle No. C34637 Exp. 9-30-99 CIVIL STATE OF CALIFORNIA

To accompany plans dated .....

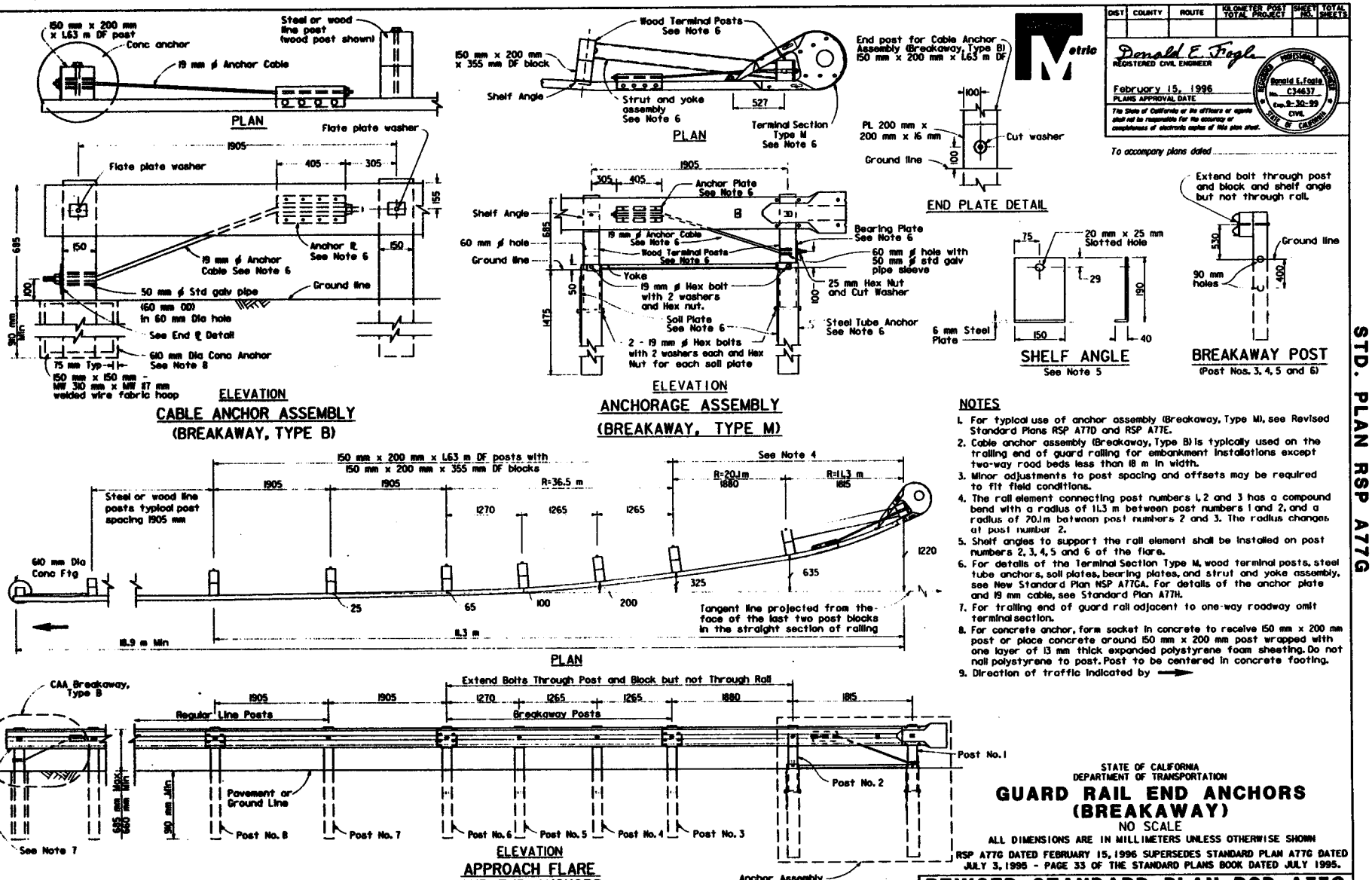

NOTES

1. For typical use of anchor assembly (Breakaway, Type M), see Revised Standard Plans RSP A77D and RSP A77E.
2. Cable anchor assembly (Breakaway, Type B) is typically used on the trailing end of guard railing for embankment installations except two-way road beds less than 18 m in width.
3. Minor adjustments to post spacing and offsets may be required to fit field conditions.
4. The rail element connecting post numbers 1, 2 and 3 has a compound bend with a radius of 11.3 m between post numbers 1 and 2, and a radius of 20.1m between post numbers 2 and 3. The radius changes at post number 2.
5. Shelf angles to support the rail element shall be installed on post numbers 2, 3, 4, 5 and 6 of the flare.
6. For details of the Terminal Section Type M, wood terminal posts, steel tube anchors, soil plates, bearing plates, and strut and yoke assembly, see New Standard Plan NSP A77GA. For details of the anchor plate and 19 mm cable, see Standard Plan A77H.
7. For trailing end of guard rail adjacent to one-way roadway omit terminal section.
8. For concrete anchor, form socket in concrete to receive 150 mm x 200 mm post or place concrete around 150 mm x 200 mm post wrapped with one layer of 13 mm thick expanded polystyrene foam sheeting. Do not nail polystyrene to post. Post to be centered in concrete footing.
9. Direction of traffic indicated by →

STATE OF CALIFORNIA
DEPARTMENT OF TRANSPORTATION

GUARD RAIL END ANCHORS (BREAKAWAY)

NO SCALE

ALL DIMENSIONS ARE IN MILLIMETERS UNLESS OTHERWISE SHOWN

RSP A77G DATED FEBRUARY 15, 1996 SUPERSEDES STANDARD PLAN A77G DATED JULY 3, 1995 - PAGE 33 OF THE STANDARD PLANS BOOK DATED JULY 1995.

REVISED STANDARD PLAN RSP A77G

STD. PLAN RSP A77G

DIST	COUNTY	ROUTE	KILOMETER POST TOTAL PROJECT	SHEET NO.	TOTAL SHEETS

Donald E. Fogle
REGISTERED CIVIL ENGINEER
February 15, 1996
PLANS APPROVAL DATE
Donald E. Fogle No. C34637 Exp. 9-30-99 CIVIL STATE OF CALIFORNIA
The State of California or its officers or agents shall not be responsible for the accuracy or completeness of electronic copies of this plan sheet.

To accompany plans dated _____

Metric

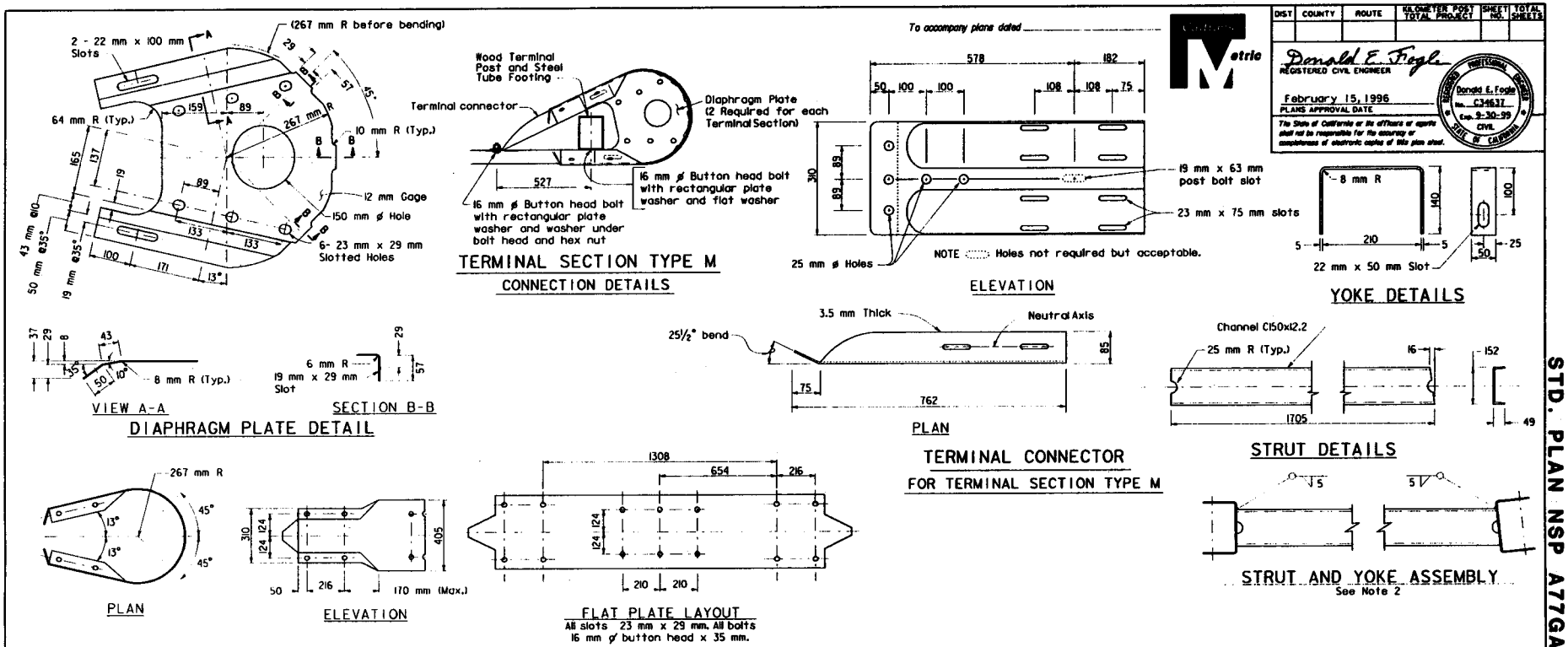

TERMINAL SECTION TYPE M
CONNECTION DETAILS

ELEVATION

YOKE DETAILS

DIAPHRAGM PLATE DETAIL

TERMINAL CONNECTOR
FOR TERMINAL SECTION TYPE M

STRUT DETAILS

TERMINAL SECTION TYPE M

STRUT AND YOKE ASSEMBLY
See Note 2

STEEL TUBE ANCHOR

WOOD TERMINAL POST

SOIL PLATE

BEARING PLATE

NOTES

1. See Revised Standard Plan RSP A77G for additional details of Anchor Assembly (Breakaway, Type M).
2. Where Anchor Assembly (Breakaway, Type M) is installed on the departure end of guard railing, turn and rotate the strut and yoke assembly to reverse the yokes with the legs of the strut pointing up instead of down.

STATE OF CALIFORNIA
DEPARTMENT OF TRANSPORTATION

ANCHOR ASSEMBLY (BREAKAWAY, TYPE M) HARDWARE AND POST DETAILS

NO SCALE

NSP A77GA DATED FEBRUARY 15, 1996 SUPPLEMENTS THE STANDARD PLANS BOOK DATED JULY 1995

ALL DIMENSIONS ARE IN MILLIMETERS UNLESS OTHERWISE SHOWN

NEW STANDARD PLAN NSP A77GA

STD. PLAN NSP A77GA

To accompany plans dated _____

Metric

DIST	COUNTY	ROUTE	KILOMETER POST TOTAL PROJECT	SHEET NO.	TOTAL SHEETS

Donald E. Fogle
REGISTERED CIVIL ENGINEER

February 15, 1996
PLANS APPROVAL DATE

The State of California or its officers or agents shall not be responsible for the accuracy or completeness of electronic copies of this plan sheet.

REGISTERED PROFESSIONAL ENGINEER Donald E. Fogle No. C34637 Exp. 9-30-99 CIVIL STATE OF CALIFORNIA

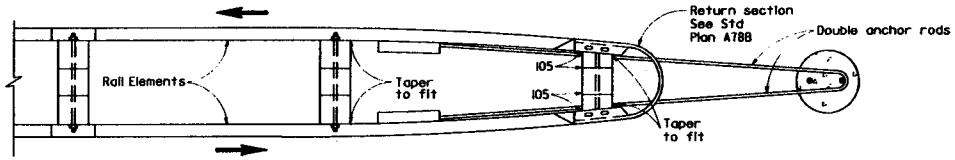

PLAN

NOTES

1. For anchor details, see Cable Anchor Assembly (Breakaway, Type B) on Revised Standard Plan RSP A77G.
2. For anchor details, see Cable Anchor Assembly (Breakaway, Type M) on Revised Standard Plan RSP A77G.
3. For guard railing approach flares, see Revised Standard Plan RSP A77D.
4. For connection details to bridge, retaining walls and abutments, see Standard Plan A78E and A78F.
5. Direction of traffic indicated by ⟶

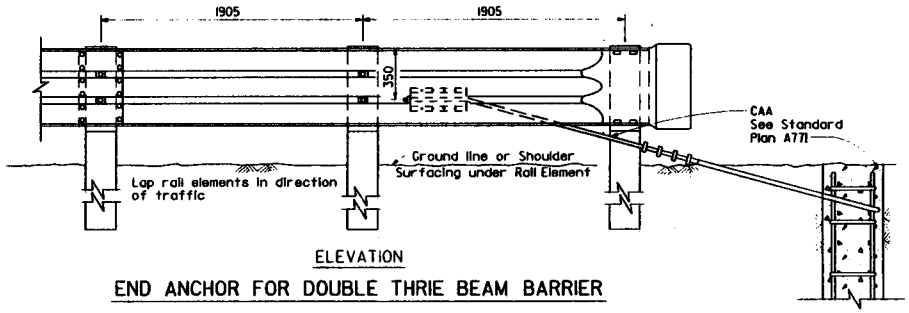

ELEVATION

END ANCHOR FOR DOUBLE THRIE BEAM BARRIER

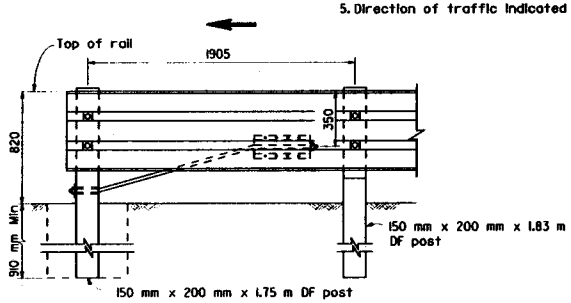

TRAILING END ANCHOR FOR
SINGLE THRIE BEAM BARRIER

(For one-way roadways)
See Note 1

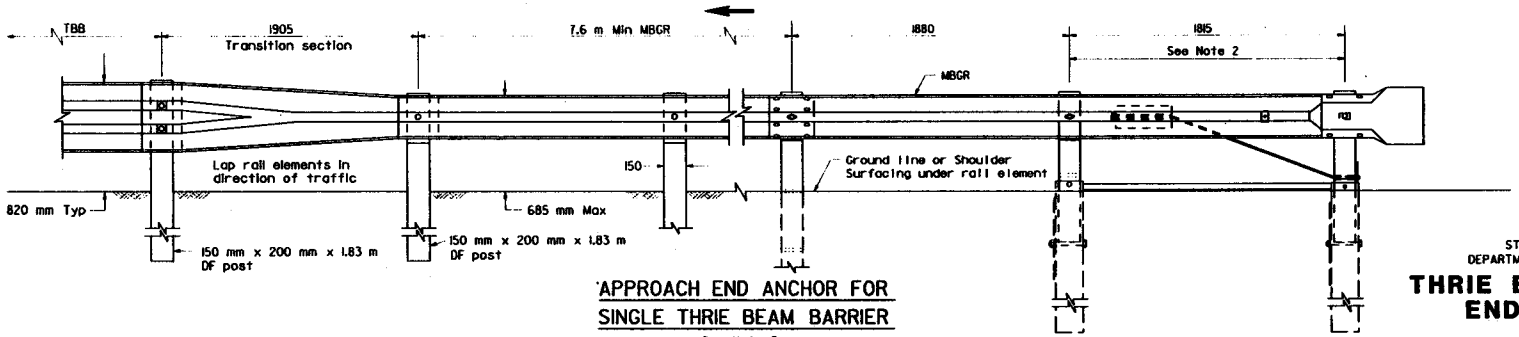

APPROACH END ANCHOR FOR
SINGLE THRIE BEAM BARRIER

See Note 3

RSP A78C DATED FEBRUARY 15, 1996 SUPERSEDES STANDARD PLAN A78C DATED JULY 3, 1995 - PAGE 40 OF THE STANDARD PLANS BOOK DATED JULY 1995.

STATE OF CALIFORNIA
DEPARTMENT OF TRANSPORTATION

THRIE BEAM BARRIER END ANCHORS

NO SCALE

ALL DIMENSIONS ARE IN MILLIMETERS UNLESS OTHERWISE SHOWN

REVISED STANDARD PLAN RSP A78C

STD PLAN RSP A78C

DIST	COUNTY	ROUTE	KILOMETER POST TOTAL PROJECT	SHEET NO.	TOTAL SHEETS

REGISTERED CIVIL ENGINEER

May 29, 1996
PLANS APPROVAL DATE

Allen Brenn No. C43388 Exp. 3-31-97 CIVIL STATE OF CALIFORNIA REGISTERED PROFESSIONAL ENGINEER

The State of California or its officers or agents shall not be responsible for the accuracy or completeness of electronic copies of this plan sheet.

To accompany plans dated _____

Caltrans Metric

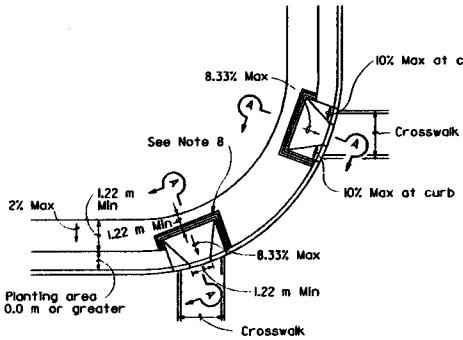

CASE A
See Note 9

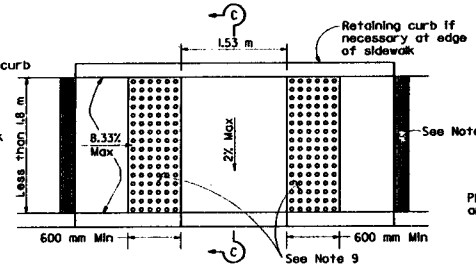

CASE C
Use when sidewalk is less than 1.8 m wide

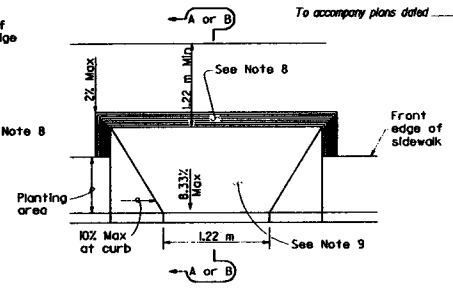

CASE F
See Note 4

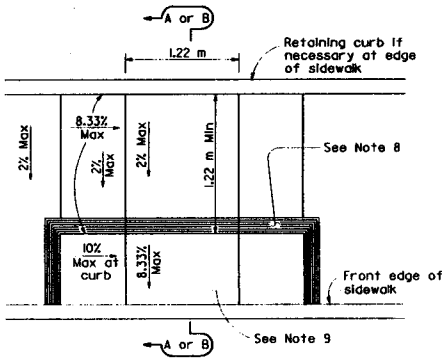

CASE B

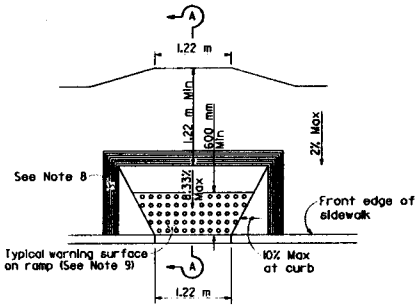

CASE D

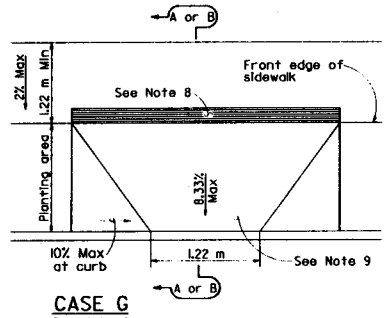

CASE G
See Note 4

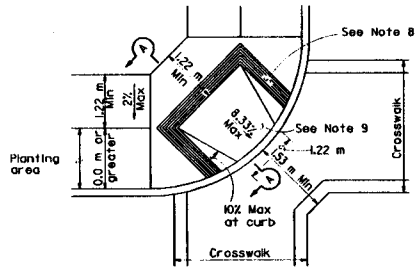

CASE E

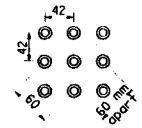

RAISED TRUNCATED DOME PATTERN

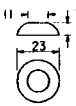

RAISED TRUNCATED DOME
DETECTABLE WARNING SURFACE
See Note 9

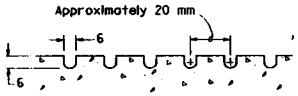

GROOVING DETAIL

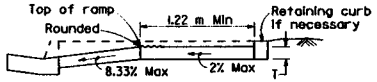

SECTION A-A

SECTION B-B
Depress entire sidewalk as required

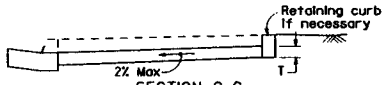

SECTION C-C

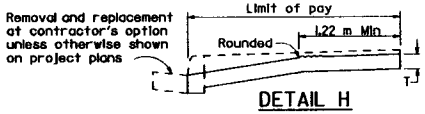

DETAIL H
Existing curb and sidewalk

NOTES

1. If distance from curb to back of sidewalk is too short to accommodate ramp and 1.22 m platform as in Case A, the sidewalk may be depressed longitudinally as in Case B or C or may be widened as in Case D.
2. If sidewalk is less than 1.8 m wide, the full width of the sidewalk shall be depressed as shown in Case C.
3. When ramp is located in center of curb return, crosswalk configuration must be similar to that shown for Case E to accommodate wheelchairs.
4. For Cases F and G, the longitudinal portion of the sidewalk may need to be depressed as shown in Case B.
5. If located on a curve the sides of the ramp need not be parallel, but the minimum width of the ramp shall be 1.22 m.
6. Transitions from ramps to walks, gutters, or streets shall be flush and free of abrupt changes.
7. Sidewalk and ramp thickness, "T", shall be 90 mm minimum.
8. The ramp shall have a 300 mm wide border with 6 mm grooves approximately 20 mm on center. See grooving detail.
9. Curb ramps that have a ramp slope flatter than 6.67% shall have a detectable warning surface that extends the full width of the ramp and 600 mm minimum length, similar to that shown on Case D. Detectable warning surfaces, at the option of the Contractor, shall be constructed by cast-in-place or stamped method, or consist of a prefabricated surface. The prefabricated surface shall conform to the requirements in the special provisions.
10. When detectable warning surface is not required on a curb ramp, the concrete finish of the ramp and its flared sides shall have a transverse broomed surface texture rougher than the surrounding sidewalk.
11. Ramp side slope varies uniformly from a maximum of 10% at curb to conform with longitudinal sidewalk slope adjacent to top of the ramp, except in Case C.
12. Utility pull boxes, manholes, vaults and all other utility facilities within the boundaries of the curb ramp will be relocated by the owner prior to, or in conjunction with, curb ramp construction.
13. Maximum slopes of adjoining gutters, the road surface immediately adjacent to the curb ramp and continuous passage to the curb ramp shall not exceed 5 percent within 1.22 m of the top or bottom of the curb ramp.
14. Design details approved by the Division of the State Architect on March 18, 1996.

STATE OF CALIFORNIA
DEPARTMENT OF TRANSPORTATION

CURB RAMP DETAILS

NO SCALE

ALL DIMENSIONS ARE IN MILLIMETERS UNLESS OTHERWISE SHOWN

NSP A88 DATED MAY 29, 1996 SUPPLEMENTS THE STANDARD PLANS BOOK DATED JULY 1995.

NEW STANDARD PLAN NSP A88

STD. PLAN NSP A88

DIST	COUNTY	ROUTE	POST MILES TOTAL PROJECT	SHEET NO.	TOTAL SHEETS

Donald E Fogle
REGISTERED CIVIL ENGINEER

August 28, 1996
PLANS APPROVAL DATE

Donald E. Fogle No. C34637 Exp. 9-30-98 CIVIL STATE OF CALIFORNIA

The State of California or its officers or agents shall not be responsible for the accuracy or completeness of electronic copies of this plan sheet.

To accompany plans dated _____

Caltrans Metric

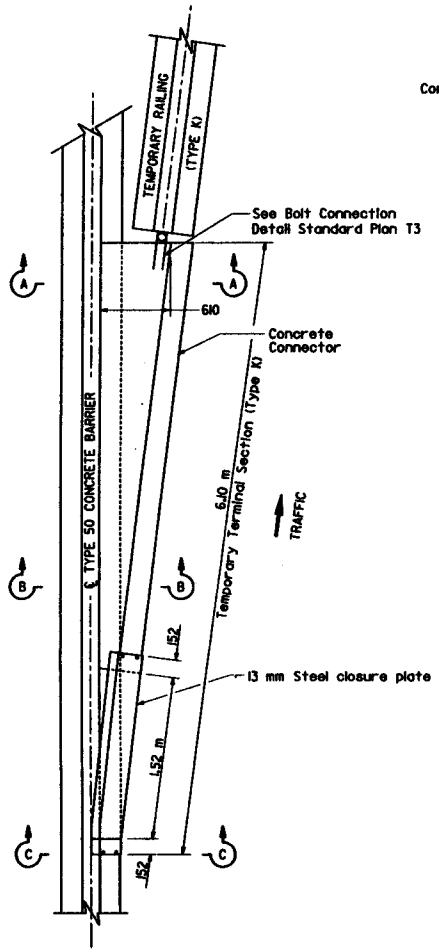

PLAN

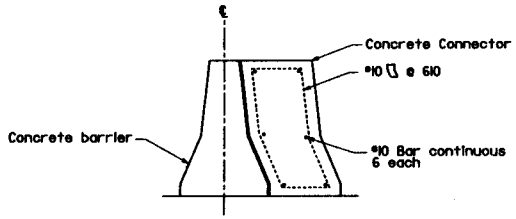

SECTION A-A

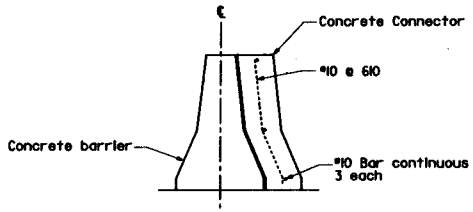

SECTION B-B

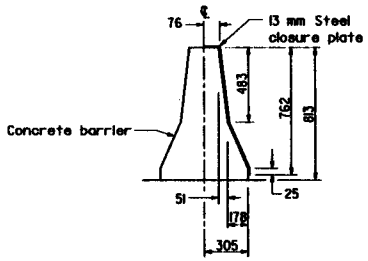

SECTION C-C

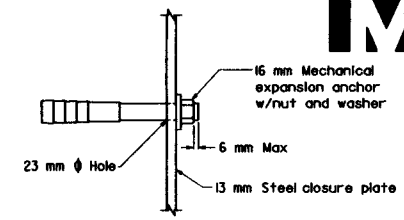

CLOSURE PLATE
ANCHOR BOLT DETAIL

NOTE

1. If lifting holes are used with the concrete connector, they shall conform to the lifting hole details shown on Standard Plan T3.
2. Paint closure plate white.
3. When the temporary terminal section (Type K) is no longer required and is to be removed, the anchor bolts connecting the closure plate and the barrier shall be removed or cut flush with the face of the concrete barrier. If the anchor bolts are removed, the resulting holes shall be filled with grout.

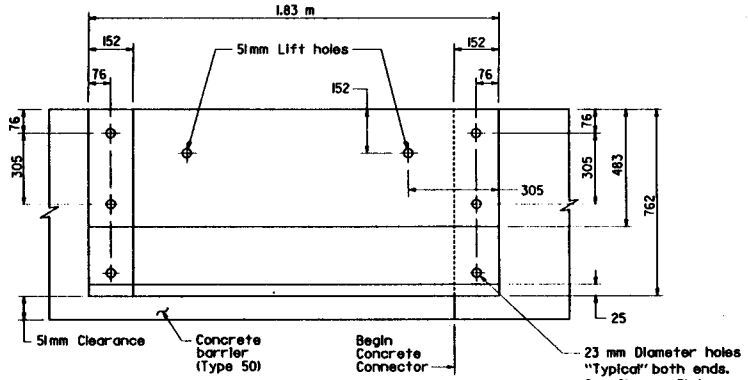

CLOSURE PLATE
(SIDE VIEW)

STATE OF CALIFORNIA
DEPARTMENT OF TRANSPORTATION

TEMPORARY TERMINAL SECTION (TYPE K)

NO SCALE

ALL DIMENSIONS ARE IN MILLIMETERS UNLESS OTHERWISE SHOWN

NSP T5 DATED AUGUST 28, 1996 SUPPLEMENTS THE STANDARD PLANS BOOK DATED JULY 1995.

NEW STANDARD PLAN NSP T5

STD. PLAN NSP T5

DATE PLOTTED => 11-Sep-1996
TIME PLOTTED => 16:00

To accompany plans dated _____

Metric

DIST	COUNTY	ROUTE	KILOMETER POST TOTAL PROJECT	SHEET NO.	TOTAL SHEETS

REGISTERED CIVIL ENGINEER

February 15, 1996
PLANS APPROVAL DATE

J. C. Moose
No. C16576
Exp. 6-30-97
CIVIL
STATE OF CALIFORNIA
REGISTERED PROFESSIONAL ENGINEER

The State of California or its officers or agents shall not be responsible for the accuracy or completeness of electronic copies of this plan sheet.

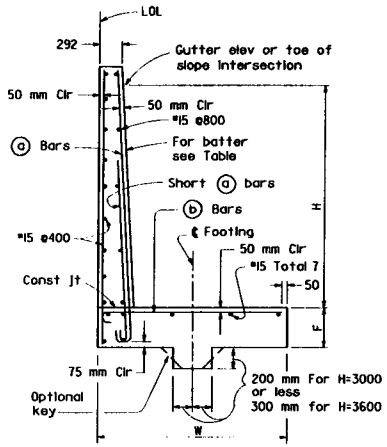

SPREAD FOOTING SECTION

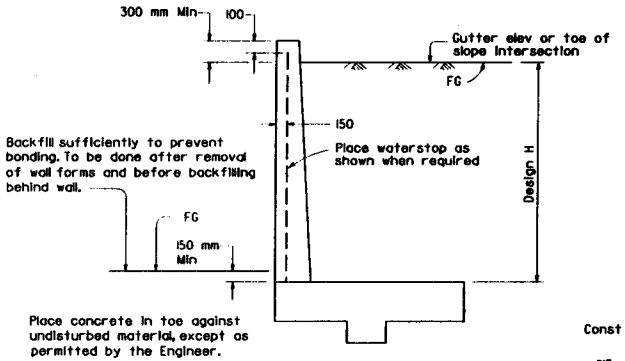

DESIGN

For drainage notes and other details, see (B3-8)

MAX PILE SPACING FOR 400 kN PILES

Design H	Front Row 4:3 Batter	Back Row Vertical
1200	5400	5400
1800	3600	5400
2400	2700	5400
3000	1800	3600
3600	1200	2400

For actual spacing, see Wall Layout.

Pile layout does not apply to Case IV conditions.

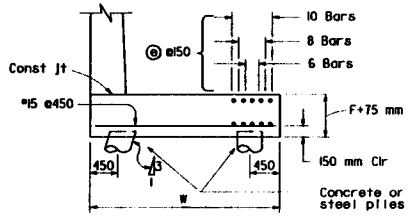

Reinforcement detailed is to be placed in addition to that shown for spread footings.

◉ For Design H=1200 use W=1550
All others from table

400 kN PILE FOOTING SECTION

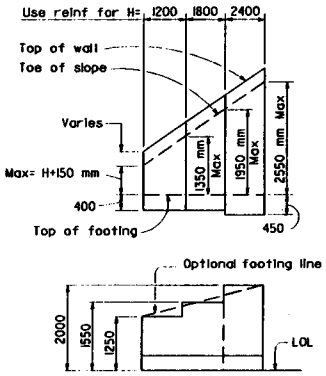

TYPICAL LAYOUT EXAMPLE

For joints required, see (B0-3 / 3-3) & (B0-3 / 3-4)

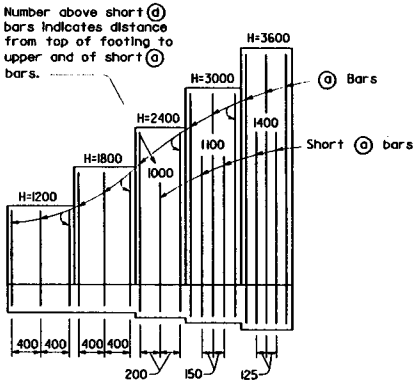

ELEVATION

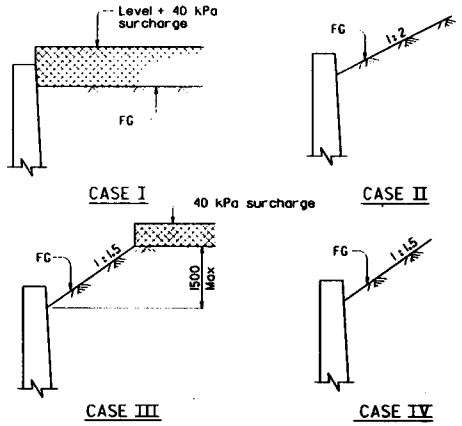

DETAIL OF DESIGN LOADING CASES

Case I Level + 40 kPa surcharge
Case II 1:2 Unlimited slope
Case III 1:1.5 Limited slope (1500 max height) + 40 kPa Surcharge
Case IV 1:1.5 Unlimited slope

NOTES

Design Conditions:

Design H may be exceeded by 150 mm before going to the next size.
Special footing design is required where foundation material is incapable of supporting toe pressure loads listed in table.

Design Data:

f_c = 10 MPa f'_c = 25 MPa f_s = 168 MPa n = 10 earth = 19 kN/m³
Case I- Wall design for equivalent fluid pressure = 4.2 and 5.6 kPa/m.
Case II, III, IV - Wall design is based on Rankine's formula with ø = 33°-42°.

TABLE OF REINFORCING STEEL DIMENSIONS AND DATA

Design H		◉ 1200	1800	2400	3000	3600
W		1250	1550	2000	2450	2900
F Spread Ftg		400	400	450	450	550
Batter		None	None	None	100:3	100:3
	ⓐ Bars	#15@400	#15@400	#15@400	#15@300	#15@250
Short	ⓐ Bars	None	None	#15@400	#15@300	#15@250
	ⓑ Bars	#15@400	#15@400	#15@200	#15@150	#15@125
Total	ⓔ Bars	8-#20	8-#20	10-#20	8-#20	6-#20
Toe Pressure	Case I kPa	80	105	120	145	170
	Case II kPa	75	100	130	165	195
	Case III kPa	80	110	140	185	210
	Case IV kPa	95	155	200	255	310

STATE OF CALIFORNIA
DEPARTMENT OF TRANSPORTATION

RETAINING WALL TYPE 5

NO SCALE

ALL DIMENSIONS ARE IN MILLIMETERS UNLESS OTHERWISE SHOWN

RSP B3-7 DATED FEBRUARY 15, 1996 SUPERSEDES STANDARD PLAN B3-7 DATED JULY 3, 1995 - PAGE 147 OF THE STANDARD PLANS BOOK DATED JULY 1995.

REVISED STANDARD PLAN RSP B3-7

STD. PLAN RSP B3-7

DIST	COUNTY	ROUTE	KILOMETER POST TOTAL PROJECT	SHEET NO.	TOTAL SHEETS

REGISTERED CIVIL ENGINEER

February 15, 1996
PLANS APPROVAL DATE

The State of California or its officers or agents shall not be responsible for the accuracy or completeness of electronic copies of this plan sheet.

REGISTERED PROFESSIONAL ENGINEER Richard F. Ryan No. C47798 Exp. 12-31-99 CIVIL STATE OF CALIFORNIA

To accompany plans dated .....

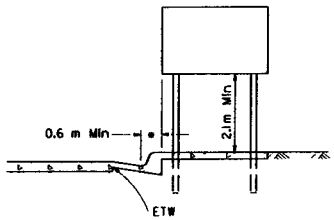

* 0.3 m Min where lateral clearance limited

URBAN LOCATIONS

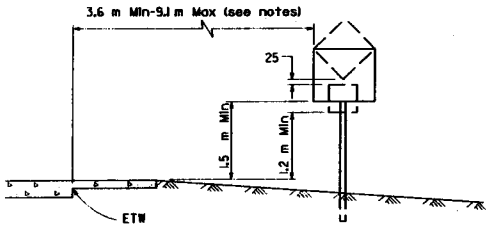

RURAL LOCATIONS

CONVENTIONAL HIGHWAYS AND INTERCHANGE AREAS

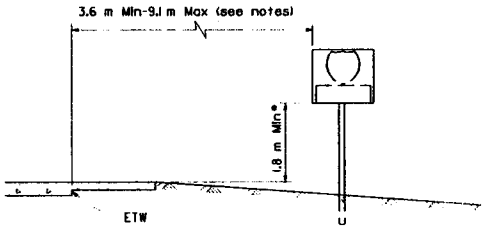

* 1.5 m Min at 9.1 m out

REGULATORY AND WARNING SIGNS AND ROUTE SHIELDS

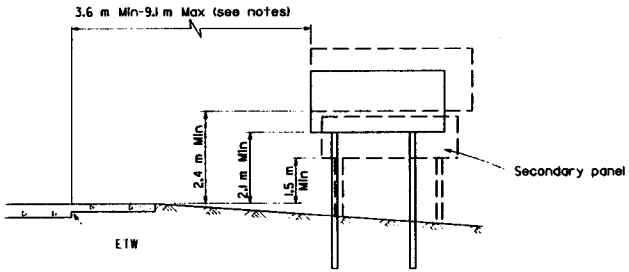

GUIDE SIGNS

FREEWAY AND EXPRESSWAY LOCATIONS

NOTES

When clear roadside recovery areas are provided, signs shall be placed as far from the edge of traveled way as possible, up to a maximum of 9.1 m. When possible they shall be placed in protected locations.

Signs in medians shall be placed at midpoint of median up to a maximum distance of 9.1 m from edge of traveled way. When appropriate, signs for opposing directions shall be placed back to back.

ETW = Edge of Traveled Way

STATE OF CALIFORNIA
DEPARTMENT OF TRANSPORTATION

ROADSIDE SIGNS
TYPICAL INSTALLATION DETAILS NO 1

NO SCALE

ALL DIMENSIONS ARE IN MILLIMETERS UNLESS OTHERWISE SHOWN

RSP RS1 DATED FEBRUARY 15, 1996 SUPERSEDES STANDARD PLAN RS1 DATED JULY 3, 1995 - PAGE 172 OF THE STANDARD PLANS BOOK DATED JULY 1995.

REVISED STANDARD PLAN RSP RS1

STD. PLAN RSP RS1

DIST	COUNTY	ROUTE	KILOMETER POST TOTAL PROJECT	SHEET NO.	TOTAL SHEETS

REGISTERED CIVIL ENGINEER

August 28, 1996
PLANS APPROVAL DATE

The State of California or its officers or agents shall not be responsible for the accuracy or completeness of electronic copies of this plan sheet.

REGISTERED PROFESSIONAL ENGINEER JEFFREY B. BRADY No. C49260 Exp. 3-31-99 CIVIL STATE OF CALIFORNIA

To accompany plans dated _____

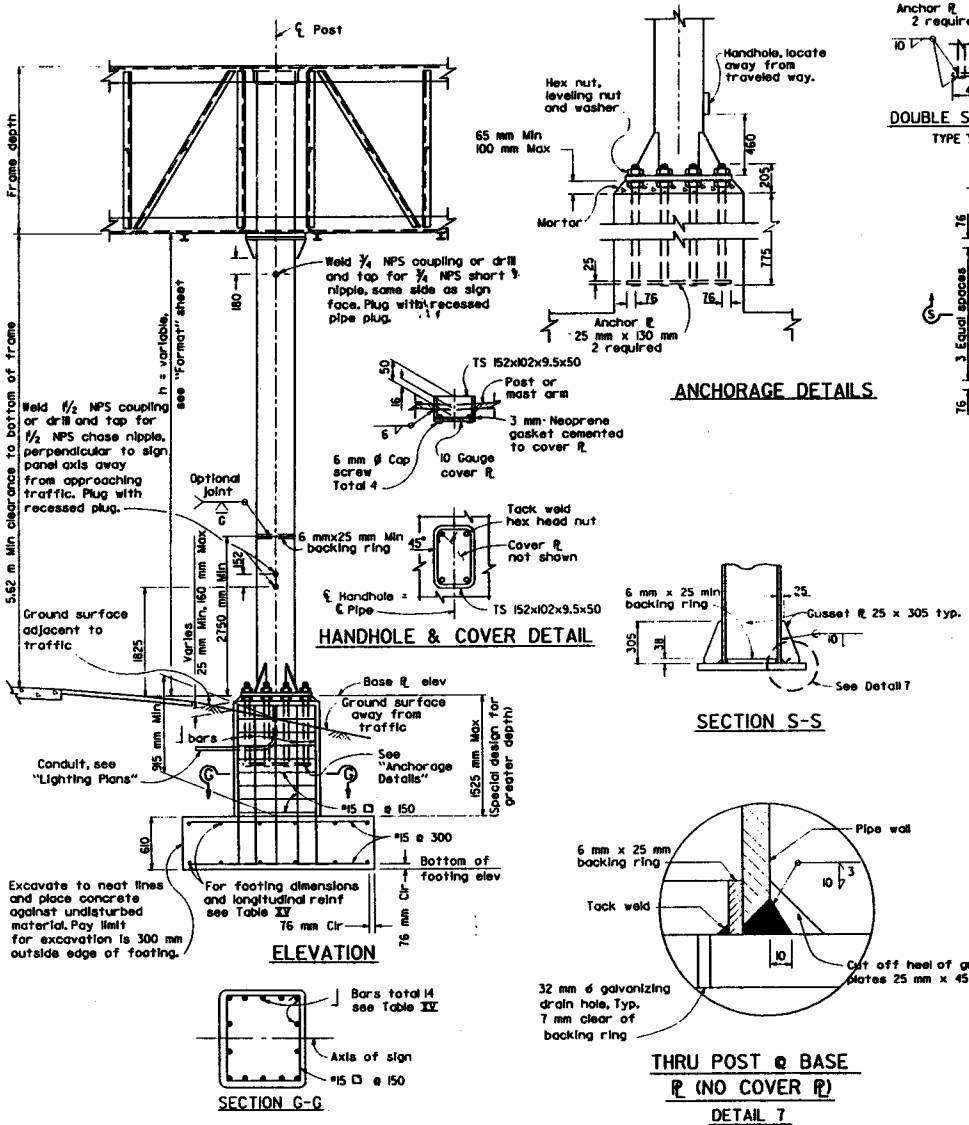

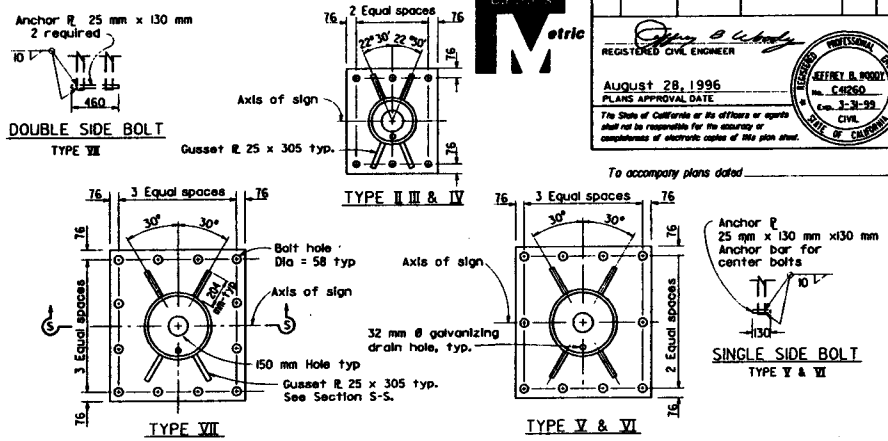

TYPICAL BASE PLATES

TABLE XV

Post Type	Pipe Size NPS	Pipe Size "t" (mm)	Cap Plate Size (mm)	Base Plate Size (Note #2) (mm)	51 mm ø Anchor Bolts	Pedestal Size (Note #2) (mm)	Footing Size (Note #2) (m)	Longitudinal Footing Reinforcement Top	Longitudinal Footing Reinforcement Bottom	J Bars
II	12	9.53	483 x 483 x 22	715 x 635 x 51	6	890 x 815	2.2 x 3.1	6-#15 bars	9-#15 bars	#15
III	14	12.7	508 x 508 x 22	790 x 690 x 51	6	965 x 865	2.4 x 3.7	8-#15 bars	8-#25 bars	#20
IV	16	12.7	560 x 560 x 22	940 x 840 x 51	6	1120 x 1020	2.5 x 4.3	9-#15 bars	9-#25 bars	#20
V	18	12.7	610 x 610 x 22	990 x 915 x 51	10	1170 x 1095	2.8 x 4.6	9-#15 bars	9-#30 bars	#25
VI	20	12.7	660 x 660 x 25	990 x 915 x 51	10	1170 x 1095	2.8 x 4.9	8-#20 bars	8-#30 bars	#25
VII	24	12.7	762 x 762 x 25	1095 x 990 x 51	12	1295 x 1195	3.1 x 5.2	10-#20 bars	10-#30 bars	#30

NOTES

1. For "General Notes" see Standard Plan S1.
2. Longer sides of base plates, pedestals and footing shall be normal to axis of sign.
3. Backfill shall be in place prior to erection of post.
4. Thread upper 200 mm of anchor bolts and galvanize upper 300 mm.
5. Spread footing shown, use Pile Foundation when shown on the Project Plans.
6. Anchor plates may be retained with hexagon nut or formed head as alternatives to details shown.
7. On single post sign structures, the post shall be raked out of plumb, with the use of the leveling nuts to make the bottom of the sign frame level.
8. At final position of post all top and bottom nuts shall be tightened against base plate.
9. When foundation is located on a steep slope with exposed face of concrete adjacent to traffic, see "Detail C" on Standard Plan S13.
10. Slope protection required when indicated on the Project Plans.

STATE OF CALIFORNIA
DEPARTMENT OF TRANSPORTATION

OVERHEAD SIGNS-TRUSS SINGLE POST TYPE POST TYPES II THROUGH VII

NO SCALE

ALL DIMENSIONS ARE IN MILLIMETERS UNLESS OTHERWISE SHOWN

RSP S2 DATED AUGUST 28, 1996 SUPERSEDES STANDARD PLAN S2 DATED JULY 3, 1995-PAGE 177 OF THE STANDARD PLANS BOOK DATED JULY 1995.

REVISED STANDARD PLAN RSP S2

STD. PLAN RSP S2

DATE PLOTTED => 10-Sep-1996
TIME PLOTTED => 10:07

USERNAME => trrichf

DIST	COUNTY	ROUTE	KILOMETER POST TOTAL PROJECT	SHEET NO.	TOTAL SHEETS

REGISTERED CIVIL ENGINEER

August 28, 1996

PLANS APPROVAL DATE

The State of California or its officers or agents shall not be responsible for the accuracy or completeness of electronic copies of this plan sheet.

To accompany plans dated _____

Metric

TABLE XIV										
Post Type	Pipe Size		Split (mm)	Base Plate Size (See Note 3) (mm)	Anchor Bolts (mm)	Pedestal Size (See Note 3) (mm)	Footing Size (See Note 3) meter x meter	Longitudinal Footing Reinforcement		J Bars
	NPS	Wall Thickness (mm)						Top	Bottom	
I-S	10	9.27	100	685x535x51	6-51 ø	850x700	1.5x3.1	5-#15 bars	5-#20 bars	#20
II-S	12	9.53	130	760x585x51	6-51 ø	925x775	1.9x3.4	6-#15 bars	6-#25 bars	#25
III-S	14	12.70	130	840x610x51	6-51 ø	1000x800	2.2x4.0	7-#15 bars	7-#25 bars	#25
IV-S	16	12.70	150	890x790x51	8-51 ø	1075x975	2.5x4.3	8-#15 bars	8-#30 bars	#30
V-S	18	12.70	180	940x840x51	8-51 ø	1125x1025	2.5x4.9	8-#15 bars	8-#30 bars	#30
VI-S	20	12.70	200	1040x840x51	8-51 ø	1225x1025	2.8x5.2	9-#15 bars	9-#35 bars	#35
VII-S	24	12.70	200	1145x990x51	8-57 ø	1350x1200	3.1x5.5	10-#20 bars	10-#35 bars	#35

NOTES

1. For "General Notes" see Standard Plan S1.
2. Longer sides of base plates, pedestals and footings; shall be normal to axis of sign.
3. Backfill shall be in place prior to erection of post.
4. Thread upper 203 mm of anchor bolts and galvanize upper 305 mm.
5. Spread footing shown, use pile foundation when shown on the Project Plans.
6. Anchor plates may be retained with hex nut or formed head as an alternative to details shown.
7. When foundation is located on a steep slope with exposed face of concrete adjacent to traffic, see "Detail C" on Standard Plan S13.
8. Slope protection required when indicated on Project Plans.

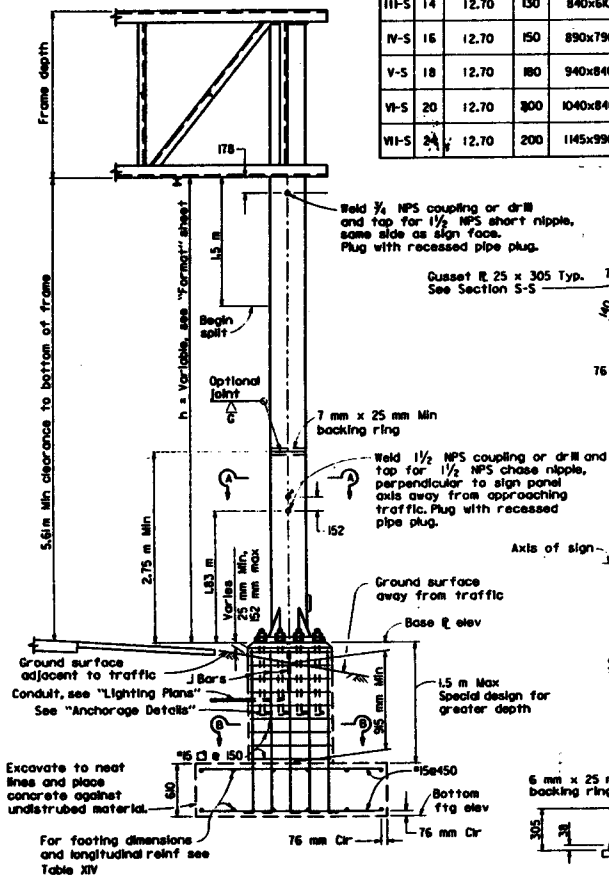

ELEVATION

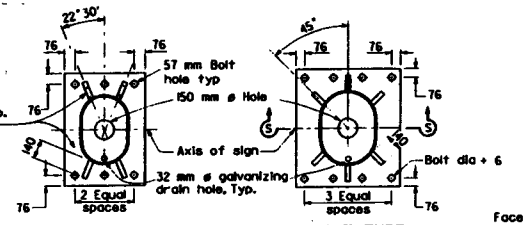

6 BOLT TYPE — 8 BOLT TYPE

TYPICAL BASE PLATES

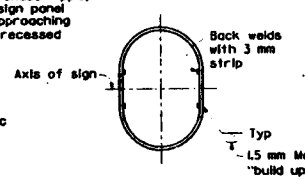

SECTION A-A

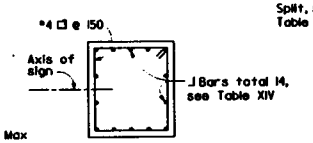

SECTION B-B

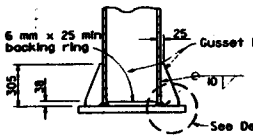

SECTION S-S

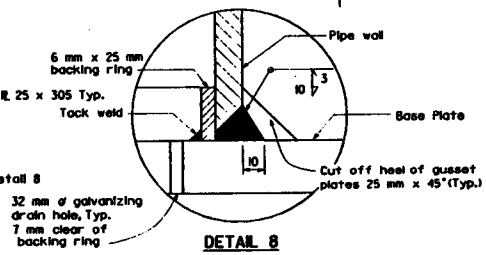

DETAIL 8

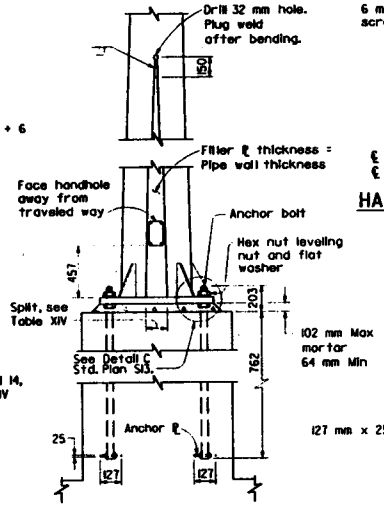

ANCHORAGE DETAILS

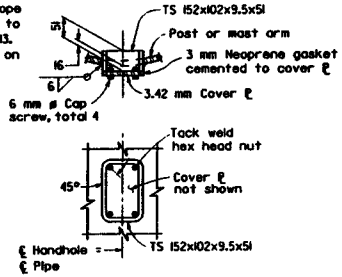

HANDHOLE AND COVER DETAILS

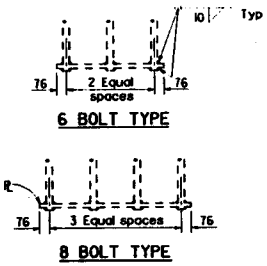

6 BOLT TYPE — 8 BOLT TYPE

STATE OF CALIFORNIA
DEPARTMENT OF TRANSPORTATION

OVERHEAD SIGNS-TRUSS TWO POST TYPE POST TYPES I-S THROUGH VII-S

NO SCALE

ALL DIMENSIONS ARE IN MILLIMETERS UNLESS OTHERWISE SHOWN

RSP S3 DATED AUGUST 28, 1996 SUPERSEDES STANDARD PLAN S3 DATED JULY 3, 1995-PAGE 178 OF THE STANDARD PLANS BOOK DATED JULY 1995.

REVISED STANDARD PLAN RSP S3

STD. PLAN RSP S3

DATE PLOTTED => 10-Sep-1996
TIME PLOTTED => 10:07

USERNAME => trrichf

STATE OF CALIFORNIA
DEPARTMENT OF TRANSPORTATION

Date: August 28, 1996

JULY 1995 STANDARD PLANS BOOK

NEW STANDARD PLANS (NSP) AND REVISED STANDARD PLANS (RSP) ISSUED SUBSEQUENT TO THE PUBLICATION OF THE JULY, 1995 METRIC STANDARD PLANS BOOK

PLAN NO.	PLAN TITLE	DATED
RSP A20A	Pavement Markers and Traffic Lines-Typical Details	2-15-96
RSP A20C	Pavement Markers and Traffic Lines-Typical Details	2-15-96
RSP A77D	Guard Rail Flares	2-15-96
RSP A77E	Guard Rail Flares	2-15-96
RSP A77F	Metal Beam Guard Railing-Miscellaneous Details	2-15-96
RSP A77G	Guard Rail End Anchors (Breakaway)	2-15-96
NSP A77GA	Anchors Assembly (Breakaway, Type M) Hardware and Post Details	2-15-96
RSP A78C	Thrie Beam Barrier End Anchors	2-15-96
RSP B2-11	Load Test Pile Details (3)	2-15-96
RSP B3-7	Retaining Wall Type 5	2-15-96
RSP RS1	Roadside Signs-Typical Details No. 1	2-15-96
---	---	---
RSP A73A	Object Markers	5-29-96
RSP A75B	Concrete Barrier Type 50E	5-29-96
RSP A77A	Metal Beam Guard Railing	5-29-96
NSP A88	Curb Ramp Details	5-29-96
NSP A90	Accessible Parking	5-29-96
---	---	---
NSP T5	Temporary Terminal Section (Type K)	8-28-96
RSP S2	Overhead Signs-Truss Single Post Type Post Types II Through VII	8-28-96
RSP S3	Overhead Signs-Truss Two Post Type Post Types I-S Through VII-S	8-28-96

DIST.	COUNTY	ROUTE	EX.CONTRACT PROJ TOTAL PROJECT	SHEET NO.	TOTAL SHEETS

The State of California or its officers or agents shall not be responsible for the accuracy or completeness of electronic copies of this plan sheet.

Caltrans Metric

To accompany plans dated _____

GENERAL ROAD WORK

MISCELLANEOUS

- ☐ A10A Abbreviations
- ☐ A10B Symbols
- ☐ *RSP A20A Pavement Markers and Traffic Lines, Typical Details*
- ☐ A20B Pavement Markers and Traffic Lines, Typical Details
- ☐ *RSP A20C Pavement Markers and Traffic Lines, Typical Details*
- ☐ A20D Pavement Markers and Traffic Lines, Typical Details
- ☐ A24A Pavement Markings- Arrows
- ☐ A24B Pavement Markings- Arrows
- ☐ A24C Pavement Markings- Symbols and Numerals
- ☐ A24D Pavement Markings- Words
- ☐ A24E Pavement Markings- Words and Crosswalks
- ☐ A35A Portland Cement Concrete Paving Details
- ☐ A40 Rumble Strip Details
- ☐ A62A Excavation and Backfill- Miscellaneous Details
- ☐ A62B Limits of Payment for Excavation and Backfill Bridge- Surcharge and Wall
- ☐ A62C Limits of Payment for Excavation and Backfill- Bridge
- ☐ A62D Excavation and Backfill- Concrete Pipe Culverts
- ☐ A62E Excavation and Backfill- Cast-in-Place Reinforced Concrete Box and Arch Culverts
- ☐ A62F Excavation and Backfill- Metal and Plastic Culverts
- ☐ *RSP A73A Object Markers*
- ☐ A73B Markers
- ☐ A73C Delineators, Channelizers and Barricades
- ☐ A74 Survey Monuments
- ☐ A75A Concrete Barrier Type 50
- ☐ *RSP A75B Concrete Barrier Type 50E*
- ☐ A75D Concrete Headlight Glare Screen
- ☐ *RSP A77A Metal Beam Guard Railing*
- ☐ A77B Metal Beam Guard Railing- Standard Hardware
- ☐ A77C Metal Beam Guard Railing- Posts and Blocks
- ☐ *RSP A77D Guard Rail Flares*
- ☐ *RSP A77E Guard Rail Flares*
- ☐ *RSP A77F Metal Beam Guard Railing- Miscellaneous Details*
- ☐ *RSP A77G Guard Rail End Anchors (Breakaway)*
- ☐ A77H Guard Rail End Anchors (Breakaway Hardware)
- ☐ A77I Barrier and Guard Rail End Anchors
- ☐ A77J Guard Rail Connections to Bridge Rails, Retaining Walls and Abutments
- ☐ A77K Guard Rail Connections to Bridge Sidewalks and Curbs
- ☐ A78A Thrie Beam Barrier
- ☐ A78B Thrie Beam Barrier- Standard Hardware and Miscellaneous Details
- ☐ *RSP A78C Thrie Beam Barrier- End Anchors*
- ☐ A78D Thrie Beam Barrier Connection to Concrete Barrier Type 50
- ☐ A78E Thrie Beam Barrier Connections to Bridge Rails
- ☐ A78F Thrie Beam Barrier Connections to Bridge Curbs, Retaining Walls and Abutments
- ☐ A80 Thrie Beam Barrier Emergency Passageway
- ☐ A81 Crash Cushion, Sand Filled
- ☐ A83 Portable Scale Pad and Approach Slab Details
- ☐ A85 Chain Link Fence
- ☐ A86 Barbed Wire and Wire Mesh Fences
- ☐ A87 Curbs, Dikes and Driveways

CRIB WALLS

- ☐ C7A Reinforced Concrete Crib Wall- Battered Wall- Types A, B and C
- ☐ C7B Reinforced Concrete Crib Wall- Battered Wall- Types D, E and F
- ☐ C7C Reinforced Concrete Crib Wall- Vertical Wall- Types A, B and C
- ☐ C7D Reinforced Concrete Crib Wall- Vertical Wall- Types D, E and F
- ☐ C7E Reinforced Concrete Crib Wall- Types A, B, C, D, E and F-Header and Stretcher Details
- ☐ C7F Design Data for Reinforced Concrete Crib Wall Foundation Pressure-Battered Wall
- ☐ C7G Reinforced Concrete Crib Wall Foundation Pressure-Vertical Wall
- ☐ C8A Steel Crib Wall- Construction Details
- ☐ C8B Steel Crib Wall- Design Data
- ☐ C8C Steel Crib Wall- Design Data
- ☐ C9A Timber Crib Wall- Types A, B, C and D
- ☐ C9B Timber Crib Wall- Types A, B, C and D-Design Data

DRAINAGE

- ☐ D72 Drainage Inlets
- ☐ D73 Drainage Inlets
- ☐ D74A Drainage Inlets
- ☐ D74B Drainage Inlets
- ☐ D74C Drainage Inlets Details
- ☐ D75 Pipe Inlet
- ☐ D77A Grate Details
- ☐ D77B Bicycle Proof Grate Details
- ☐ D77C Alternative Hinged Cover for Type OL and OS Inlets and Trash Rack for Type OCP Inlet
- ☐ D78 Gutter Depressions
- ☐ D79 Precast Reinforced Concrete Pipe- Direct Design Method
- ☐ D80 Cast-in-Place Reinforced Concrete Single Box Culvert
- ☐ D81 Cast-in-Place Reinforced Concrete Double Box Culvert
- ☐ D82 Cast-in-Place Reinforced Concrete Box Culvert Miscellaneous Details
- ☐ D84 Box Culvert Wingwalls- Types A, B and C
- ☐ D85 Box Culvert Wingwalls- Types D and E
- ☐ D86A Box Culvert Warped Wingwalls
- ☐ D86B Pipe Culvert Headwalls, Endwalls and Warped Wingwalls
- ☐ D86C Arch Culvert Headwalls, Endwalls and Warped Wingwalls
- ☐ D87A Overside Drains
- ☐ D87B Overside Drains
- ☐ D87C Underdrains
- ☐ D88 Construction Loads on Culverts
- ☐ D88A Strut Details for Structural Steel Plate Pipes, Arches, and Vehicular Undercrossings
- ☐ D89 Pipe Headwalls
- ☐ D90 Pipe Culvert Headwalls, Endwalls and Wingwalls- Types A, B and C
- ☐ D93A Pipe Riser Connections
- ☐ D93B Drainage Inlet Riser Connections
- ☐ D93C Pipe Riser with Debris Rack Cage
- ☐ D94A Metal and Plastic Flared End Sections
- ☐ D94B Concrete Flared End Sections
- ☐ D95 Concrete Arch Culverts
- ☐ D97A Corrugated Metal Pipe Coupling Details No. 1- Annular Coupling Band Bar and Strap and Angle Connectors
- ☐ D97B Corrugated Metal Pipe Coupling Details No. 2- Hat Band Coupler and Flange Details
- ☐ D97C Corrugated Metal Pipe Coupling Details No. 3- Helical and Universal Couplers
- ☐ D97D Corrugated Metal Pipe Coupling Details No. 4- Hugger Coupling Bands
- ☐ D97E Corrugated Metal Pipe Coupling Details No. 5- Standard Joint
- ☐ D97F Corrugated Metal Pipe Coupling Details No. 6- Positive Joint
- ☐ D97G Corrugated Metal Pipe Coupling Details No. 7- Positive Joints and Downdrains
- ☐ D97H Reinforced Concrete Pipe or Non-Reinforced Concrete Pipe Standard and Positive Joints
- ☐ D98A Slotted Corrugated Steel Pipe Drain Details
- ☐ D98B Slotted Corrugated Steel Pipe Drain Details
- ☐ D99A Structural Section Drainage System Details
- ☐ D99B Edge Drain Outlet and Vent Details
- ☐ D99C Edge Drain Cleanout and Vent Details
- ☐ D99D Cross Drain Interceptor Details

HIGHWAY PLANTING

- ☐ H1 Planting and Irrigation- Abbreviations
- ☐ H2 Planting and Irrigation- Symbols
- ☐ H3 Planting and Irrigation- Details
- ☐ H4 Planting and Irrigation- Details
- ☐ H5 Planting and Irrigation- Details
- ☐ H6 Planting and Irrigation- Details
- ☐ H7 Planting and Irrigation- Details
- ☐ H8 Planting and Irrigation- Details

TEMPORARY FACILITIES

- ☐ T1 Temporary Crash Cushion, Sand Filled
- ☐ T2 Temporary Crash Cushion, Sand Filled
- ☐ T3 Temporary Railing (Type K)
- ☐ T4 Temporary Traffic Screen
- ☐ T7 Construction Project Funding Identification Signs
- ☐ T10 Traffic Control System for Lane Closure on Freeways and Expressways
- ☐ T10A Traffic Control System for Lane and Complete Closures on Freeways and Expressways
- ☐ T11 Traffic Control System for Lane Closure on Multilane Conventional Highways
- ☐ T12 Traffic Control System for Lane Closure on Multilane Conventional Highways
- ☐ T13 Traffic Control System for Lane Closure on Two Lane Conventional Highways
- ☐ T14 Traffic Control System for Ramp Closures
- ☐ T15 Traffic Control System for Moving Lane Closure on Multilane Highways
- ☐ T16 Traffic Control System for Moving Lane Closure on Multilane Highways
- ☐ T17 Traffic Control System for Moving Lane Closure on Two Lane Highways

BRIDGE

- ☐ B0-1 Bridge Details
- ☐ B0-3 Bridge Details
- ☐ B0-5 Bridge Details
- ☐ B0-13 Bridge Details
- ☐ B2-3 400 mm Cast-in-Drilled-Hole Concrete Pile
- ☐ B2-5 Pile Details- Class 400 and Class 625
- ☐ B2-6 Pile Details- Class 400C and Class 625C
- ☐ B2-8 Pile Details- Class 900 and Class 900C
- ☐ B2-9 Load Test Pile Details (1)
- ☐ B2-10 Load Test Pile Details (2)
- ☐ *RSP B2-11 Load Test Pile Details (3)*
- ☐ B3-1 Retaining Wall Type 1- H=1200 Through 9100 mm
- ☐ B3-2 Retaining Wall Type 1- H=9700 Through 10 900 mm
- ☐ B3-3 Retaining Wall- Type 1A
- ☐ B3-4 Retaining Wall- Type 2
- ☐ B3-5 Counterfort Retaining Wall- Type 3
- ☐ B3-6 Counterfort Retaining Wall- Type 4
- ☐ *RSP B3-7 Retaining Wall- Type 5*
- ☐ B3-8 Retaining Wall Details No. 1
- ☐ B3-9 Retaining Wall Details No. 2
- ☐ B3-11 Retaining Wall Type 6- 1829 mm Maximum
- ☐ B6-1 T-Beam Details
- ☐ B6-10 Utility Openings, T-Beam
- ☐ B6-21 Joint Seals (Maximum Movement Rating = 50 mm)
- ☐ B7-1 Box Girder Details
- ☐ B7-5 Deck Drains
- ☐ B7-6 Deck Drains- Type D-1 and D-2
- ☐ B7-10 Utility Opening- Box Girder
- ☐ B7-11 Utility Details
- ☐ B8-5 Cast-in-Place Prestressed Girder Details
- ☐ B11-7 Chain Link Railing
- ☐ B11-47 Cable Railing
- ☐ B11-51 Tubular Hand Railing
- ☐ B11-52 Chain Link Railing Type 7
- ☐ B11-53 Concrete Barrier Type 25
- ☐ B11-54 Concrete Barrier Type 26
- ☐ B13-1 Slope Protection Detail No. 1
- ☐ B13-2 Slope Protection Detail No. 2
- ☐ B14-1 Structural Steel Plate Vehicular Undercrossing
- ☐ B14-3 Communication and Sprinkler Control Conduit (Conduit less than 103 mm Diameter)
- ☐ B14-4 Water Supply Line (Bridge) (Pipe less than NPS 4)
- ☐ B14-5 Water Supply Line (Details) (Pipe less than NPS 4)

SHEET 1 OF 2

STANDARD PLANS LIST

(July, 1995 Edition)

Revised August 28, 1996

DATE PLOTTED => 23-Aug-1996
TIME PLOTTED => 13:44

The Revised Standard Plans (RSP) and New Standard Plans (NSP) which apply to this contract are included as individual sheets of the project plans.
The Standard Plan sheets applicable to this contract include, but are not limited to those indicated by a marked box.

USERNAME => trrichf
DGN FILE => LESC-DE lmspl_aug96.psf

CONTRACT NO.

ROADSIDE SIGNS

- ☐ *RSP RS1 Roadside Signs, Typical Installation Details No. 1*
- ☐ RS2 Roadside Signs, Wood Post, Typical Installation Details No. 2
- ☐ RS3 Roadside Signs, Laminated Wood Box Post, Typical Installation Details No. 3
- ☐ RS4 Roadside Signs, Typical Installation Details No. 4

OVERHEAD SIGNS

OVERHEAD SIGNS-TRUSS

- ☐ S1 Overhead Signs- Truss, Instructions and Examples
- ☐ *RSP S2 Overhead Signs- Truss, Single Post Type, Post Types II thru VII*
- ☐ *RSP S3 Overhead Signs- Truss, Two Post Type, Post Types I-S thru VII-S*
- ☐ S4 Overhead Signs- Truss, Single Post Type, Structural Frame Members
- ☐ S5 Overhead Signs- Truss, Two Post Type, Structural Frame Members
- ☐ S6 Overhead Signs- Truss, Structural Frame Details
- ☐ S7 Overhead Signs- Truss, Frame Juncture Details
- ☐ S8A Overhead Signs- Steel Frame Removable Sign Panel Frames
- ☐ S8B Overhead Signs- Removable Sign Panel Frames, Overhead Formed Panel Mounting Details
- ☐ S8C Overhead Signs- Truss, Sign Panel Mounting Details, Laminated Panel- Type A
- ☐ S8D Overhead Signs- Truss, Removable Sign Panel Frames 2.794 m and 3.048 m Sign Panels
- ☐ S9 Overhead Signs- Walkway Details No. 1
- ☐ S10 Overhead Signs- Walkway Details No. 2
- ☐ S11 Overhead Signs- Walkway Safety Railing Details
- ☐ S13 Overhead Signs- Truss Pile Foundation

OVERHEAD SIGNS-LIGHTWEIGHT

- ☐ S14A Overhead Signs- Lightweight Balanced-Single Steel Post Connection and Mounting Details
- ☐ S14B Overhead Signs- Lightweight Balanced-Single Steel Post Details
- ☐ S15 Overhead Signs- Lightweight, Type A, Connection Details
- ☐ S16 Overhead Signs- Lightweight, Type B, Connection Details
- ☐ S17 Overhead Signs- Lightweight, Type C, Connection Details
- ☐ S18A Overhead Signs- Lightweight, Sign Panel Mounting Details, Laminated Panel- Type A
- ☐ S18B Overhead Signs- Lightweight, Light Fixture Mounting Details
- ☐ S20A Overhead Signs- Lightweight Post Details
- ☐ S20B Overhead Signs- Lightweight Foundation

OVERHEAD SIGNS-BOX BEAM CLOSED TRUSS ALTERNATIVE

- ☐ S39 Overhead Signs- Box Beam, Closed Truss Foundation
- ☐ S40A Overhead Signs- Box Beam, Closed Truss, Two Post Type Frame Members
- ☐ S40B Overhead Signs- Box Beam, Closed Truss, Single and Two Post Type General Frame Details
- ☐ S40C Overhead Signs- Box Beam, Closed Truss, Ribbed Sheet Metal Details
- ☐ S40D Overhead Signs- Box Beam, Closed Truss, Two Post Type Frame Details
- ☐ S40E Overhead Signs- Box Beam, Closed Truss, Two Post Type Frame Juncture Details
- ☐ S40F Overhead Signs- Box Beam, Closed Truss, Two Post Type Post Details
- ☐ S40G Overhead Signs- Box Beam, Closed Truss, Single Post Type Frame Members
- ☐ S40H Overhead Signs- Box Beam, Closed Truss, Single Post Cantilever Frame Details
- ☐ S40I Overhead Signs- Box Beam, Closed Truss, Single Post Cantilever Frame Juncture Details
- ☐ S40J Overhead Signs- Box Beam, Closed Truss, Single Post Cantilever Post Details
- ☐ S40K Overhead Signs- Box Beam, Closed Truss, Single Post Butterfly Frame Details
- ☐ S40L Overhead Signs- Box Beam, Closed Truss, Single Post Butterfly Frame Juncture Details
- ☐ S40M Overhead Signs- Box Beam, Closed Truss, Single Post Butterfly Post Details

OVERHEAD SIGNS-TUBULAR

- ☐ S40N Overhead Signs- Tubular, Instructions and Examples
- ☐ S40P Overhead Signs- Tubular, Single Post Type Layout and Pipe Selection
- ☐ S40Q Overhead Signs- Tubular, Two Post Type Layout and Pipe Selection
- ☐ S40R Overhead Signs- Tubular, Structural Frame Details No. 1
- ☐ S40S Overhead Signs- Tubular, Structural Frame Details No. 2
- ☐ S40T Overhead Signs- Tubular Foundation Details

SIGNALS, LIGHTING AND ELECTRICAL SYSTEMS

- ☐ ES-1A Signal, Lighting and Electrical Systems- Symbols and Abbreviations
- ☐ ES-1B Signal, Lighting and Electrical Systems- Symbols and Abbreviations
- ☐ ES-2A Signal, Lighting and Electrical Systems- Service Equipment
- ☐ ES-2B Signal, Lighting and Electrical Systems- Service Equipment
- ☐ ES-2C Signal, Lighting and Electrical Systems- Service Equipment Notes
- ☐ ES-2D Signal, Lighting and Electrical Systems- Service Equipment and Typical Wiring Diagram, Type A
- ☐ ES-2E Signal, Lighting and Electrical Systems- Service Equipment and Typical Wiring Diagram, Type B
- ☐ ES-2F Signal, Lighting and Electrical Systems- Service Equipment and Typical Wiring Diagram, Type C
- ☐ ES-3A Signal, Lighting and Electrical Systems- Signal Heads and Mountings
- ☐ ES-3B Signal, Lighting and Electrical Systems- Signal Heads and Mountings
- ☐ ES-3C Signal, Lighting and Electrical Systems- Signal Heads and Mountings
- ☐ ES-3D Signal, Lighting and Electrical Systems- Signal Heads and Mountings
- ☐ ES-3E Signal, Lighting and Electrical Systems- Signal Heads and Mountings
- ☐ ES-4A Signal, Lighting and Electrical Systems- Controller Cabinet Details
- ☐ ES-4B Signal, Lighting and Electrical Systems- Controller Cabinet Details
- ☐ ES-4C Signal, Lighting and Electrical Systems- Controller Cabinet Details
- ☐ ES-4D Irrigation Controller Enclosure Cabinet
- ☐ ES-4E Signal, Lighting and Electrical Systems- Telephone Demarcation Cabinet Details
- ☐ ES-4F Signal, Lighting and Electrical Systems- Telephone Demarcation Cabinet Details
- ☐ ES-5A Signal, Lighting and Electrical Systems- Detectors
- ☐ ES-5B Signal, Lighting and Electrical Systems- Detectors
- ☐ ES-5C Signal, Lighting and Electrical Systems- Detectors
- ☐ ES-5D Signal, Lighting and Electrical Systems- Detectors
- ☐ ES-5E Signal, Lighting and Electrical Systems- Detectors
- ☐ ES-5F Signal, Lighting and Electrical Systems- Pedestrian Barricades
- ☐ ES-6A Signal and Lighting Standards- Type 1 Standards and Equipment Numbering
- ☐ ES-6AA Signal Standards- Push Button Posts
- ☐ ES-6B Lighting Standards- Types 15, 21 and 22
- ☐ ES-6C Lighting Standards- 24.4 m to 48.8 m High Mast Light Pole, Foundation Details
- ☐ ES-6D Lighting Standards- Types 30 and 31
- ☐ ES-6DA Lighting Standards- Type 32
- ☐ ES-6E Lighting Standards- Types 30 and 31, Slip Base Details
- ☐ ES-6F Lighting Standards- 10 Degree Type
- ☐ ES-6H Lighting Standards- 10 Degree Type, Details
- ☐ ES-6J Signal and Lighting Standards- Case 1 Arm Loading, Wind Velocity = 113 km/h, Arm Lengths 4.5 m to 9.1 m
- ☐ ES-6K Signal and Lighting Standards- Case 2 Arm Loading, Wind Velocity = 113 km/h, Arm Lengths 6.1 m to 9.1 m
- ☐ ES-6L Signal and Lighting Standards- Case 3 Arm Loading, Wind Velocity = 113 km/h, Arm Lengths 4.5 m to 13.7 m
- ☐ ES-6M Signal and Lighting Standards- Case 4 Arm Loading, Wind Velocity = 113 km/h, Arm Lengths 7.6 m to 13.7 m
- ☐ ES-6MA Signal and Lighting Standards- Case 5 Arm Loading, Wind Velocity = 113 km/h, Arm Lengths 15.2 m to 16.8 m
- ☐ ES-6N Signal and Lighting Standards- Type 40-0-129
- ☐ ES-6O Signal and Lighting Standards- Case 1 Arm Loading, Wind Velocity = 129 km/h, Arm Lengths 7.6 m to 9.1 m
- ☐ ES-6P Signal and Lighting Standards- Case 2 Arm Loading, Wind Velocity = 129 km/h, Arm Lengths 6.1 m to 9.1 m
- ☐ ES-6Q Signal and Lighting Standards- Case 3 Arm Loading, Wind Velocity = 129 km/h, Arm Lengths 6.1 m to 13.7 m
- ☐ ES-6R Signal and Lighting Standards- Case 4 Arm Loading, Wind Velocity = 129 km/h, Arm Lengths 7.6 m 13.7 m
- ☐ ES-6RA Signal and Lighting Standards- Case 5 Arm Loading, Wind Velocity = 129 km/h, Arm Lengths 15.2 m to 16.8 m

California Metric

DIST.	COUNTY	ROUTE	KILOMETER POST TOTAL PROJECT	SHEET NO.	TOTAL SHEETS

The State of California or its officers or agents shall not be responsible for the accuracy or completeness of electronic copies of this plan sheet.

To accompany plans dated _____

- ☐ ES-6S Signal and Lighting Standards- Details No. 1
- ☐ ES-6T Signal and Lighting Standards- Details No. 2
- ☐ ES-6TA Signal and Lighting Standards- Pole and Mast Arm Alternatives
- ☐ ES-6U Lighting Standards- Types 10 and 15 Slip Base Insert
- ☐ ES-6V Signal and Sign Standards- Type 33 Left Turn
- ☐ ES-7A Signal, Lighting and Electrical Systems- Electrical Details, Structure Installations
- ☐ ES-7B Signal, Lighting and Electrical Systems- Electrical Details, Structure Installations
- ☐ ES-7C Signal, Lighting and Electrical Systems- Electrical Details, Structure Installations
- ☐ ES-7D Signal, Lighting and Electrical Systems- Electrical Details, Structure Installations
- ☐ ES-7E Signal, Lighting and Electrical Systems- Electrical Details, Structure Installations
- ☐ ES-7F Signal, Lighting and Electrical Systems- Flush Soffit Luminaire Modification Details, Structure Installation
- ☐ ES-8 Signal, Lighting and Electrical Systems- Pull Box Details
- ☐ ES-9A Signal, Lighting and Electrical Systems- Cantilever Flashing Beacon, Types 9, 9A and 9B
- ☐ ES-9B Signal, Lighting and Electrical Systems- Cantilever Flashing Beacon, Types 9, 9A and 9B
- ☐ ES-10 Signal, Lighting and Electrical Systems- Isolux Diagrams
- ☐ ES-11 Signal, Lighting and Electrical Systems- Foundation Installations
- ☐ ES-12 Signal, Lighting and Electrical Systems- Pedestrian Undercrossing Fluorescent Lighting Fixture
- ☐ ES-13 Signal, Lighting and Electrical Systems- Splicing Details
- ☐ ES-14 Signal, Lighting and Electrical Systems- Wiring Details and Fuse Ratings
- ☐ ES-15 Signal, Lighting and Electrical Systems- Pedestrian Overcrossing Fluorescent Lighting Fixture
- ☐ ES-27A Signal, Lighting and Electrical Systems- Extinguishable Message Sign, 250 mm Letters
- ☐ ES-27B Signal, Lighting and Electrical Systems- Extinguishable Message Sign, 250 mm Letters
- ☐ ES-28 Signal, Lighting and Electrical Systems- Extinguishable Message Sign and Flashing Beacons

SIGN ILLUMINATION

- ☐ ES-29 Sign Illumination- Mercury Sign Illumination Equipment
- ☐ ES-30 Sign Illumination- 915 mm Fluorescent Sign Illumination Equipment
- ☐ ES-32A Sign Illumination- Sign Illumination Equipment
- ☐ ES-32B Sign Illumination- Sign Illumination Control
- ☐ ES-33 Sign Illumination- Internally Illuminated Street Name Sign

NEW STANDARD PLANS

- ☐ NSP A77GA Anchor Assembly (Breakaway, Type M1-Hardware and Post Details
- ☐ NSP A88 Curb Ramp Details
- ☐ NSP A90 Accessible Parking
- ☐ NSP T5 Temporary Terminal Section (Type K)

SHEET 2 OF 2

STANDARD PLANS LIST

(July, 1995 Edition)

Revised August 28, 1996

DATE PLOTTED => 23-Aug-1996
TIME PLOTTED => 13:44

The Revised Standard Plans (RSP) and New Standard Plans (NSP) which apply to this contract are included as individual sheets of the project plans. The Standard Plan sheets applicable to this contract include, but are not limited to those indicated by a marked box.

USERNAME => trrichf
DGN FILE => [ESC-OE]msp2_aug96.psf

CONTRACT NO.