Dist	COUNTY	ROUTE	POST MILES TOTAL PROJECT	SHEET No.	TOTAL SHEETS
12	Ora	91	R1.0, 5.4	101	134

Theresa Gabriel
REGISTERED ELECTRICAL ENGINEER

October 30, 2015
PLANS APPROVAL DATE

REGISTERED PROFESSIONAL ENGINEER
Theresa Aziz Gabriel
No. E15129
Exp. 6-30-16
ELECTRICAL
STATE OF CALIFORNIA

THE STATE OF CALIFORNIA OR ITS OFFICERS OR AGENTS SHALL NOT BE RESPONSIBLE FOR THE ACCURACY OR COMPLETENESS OF SCANNED COPIES OF THIS PLAN SHEET.

TO ACCOMPANY PLANS DATED 02-29-16

2010 REVISED STANDARD PLAN RSP ES-4E

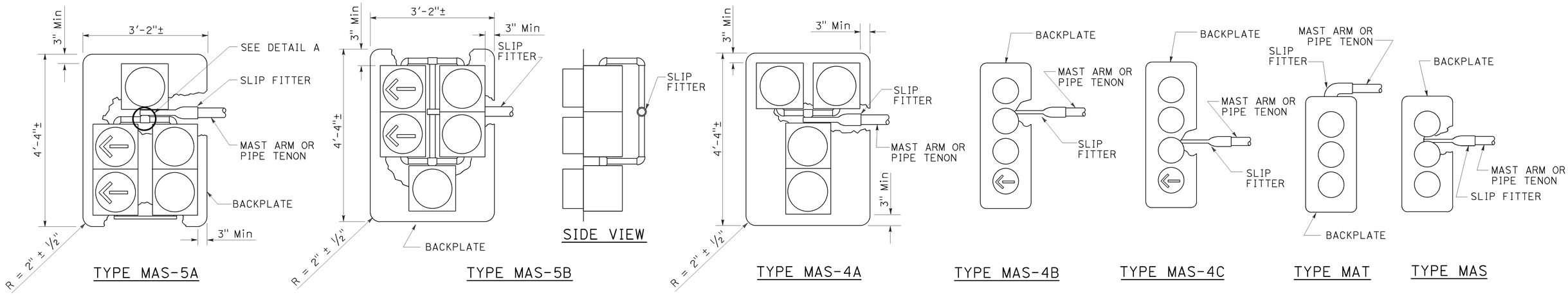

MAST ARM MOUNTINGS

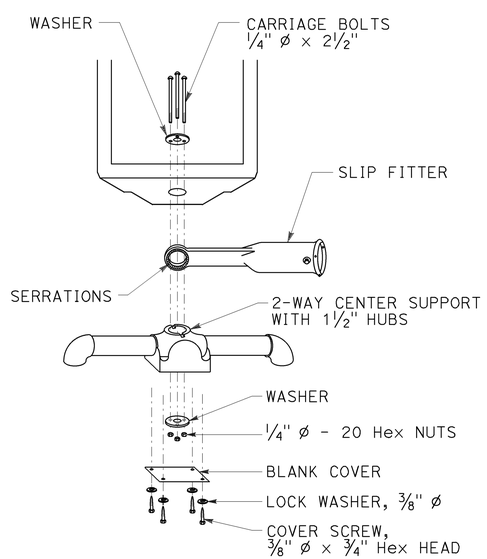

DETAIL A

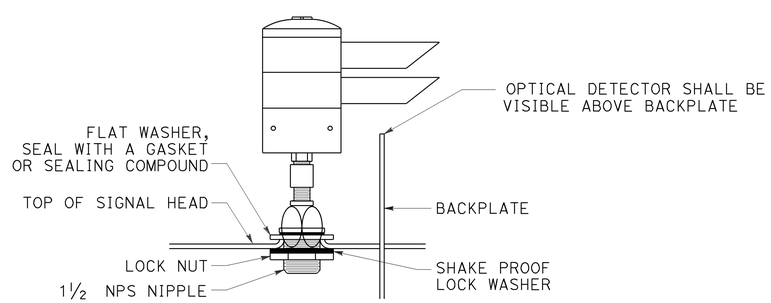

OPTICAL DETECTOR MOUNTING FOR EMERGENCY VEHICLE DETECTION

DETAIL B

STATE OF CALIFORNIA
DEPARTMENT OF TRANSPORTATION

ELECTRICAL SYSTEMS (SIGNAL HEADS AND OPTICAL DETECTOR MOUNTING)

NO SCALE

RSP ES-4E DATED OCTOBER 30, 2015 SUPERSEDES RSP ES-4E DATED JULY 19, 2013 AND STANDARD PLAN ES-4E DATED MAY 20, 2011 - PAGE 447 OF THE STANDARD PLANS BOOK DATED 2010.

REVISED STANDARD PLAN RSP ES-4E

8-19-15

Dist	COUNTY	ROUTE	POST MILES TOTAL PROJECT	SHEET No.	TOTAL SHEETS
12	Ora	91	R1.0, 5.4	102	134

Theresa Gabriel
REGISTERED ELECTRICAL ENGINEER

October 30, 2015
PLANS APPROVAL DATE

REGISTERED PROFESSIONAL ENGINEER
Theresa Aziz Gabriel
No. E15129
Exp. 6-30-16
ELECTRICAL
STATE OF CALIFORNIA

THE STATE OF CALIFORNIA OR ITS OFFICERS OR AGENTS SHALL NOT BE RESPONSIBLE FOR THE ACCURACY OR COMPLETENESS OF SCANNED COPIES OF THIS PLAN SHEET.

TO ACCOMPANY PLANS DATED 02-29-16

2010 REVISED STANDARD PLAN RSP ES-5A

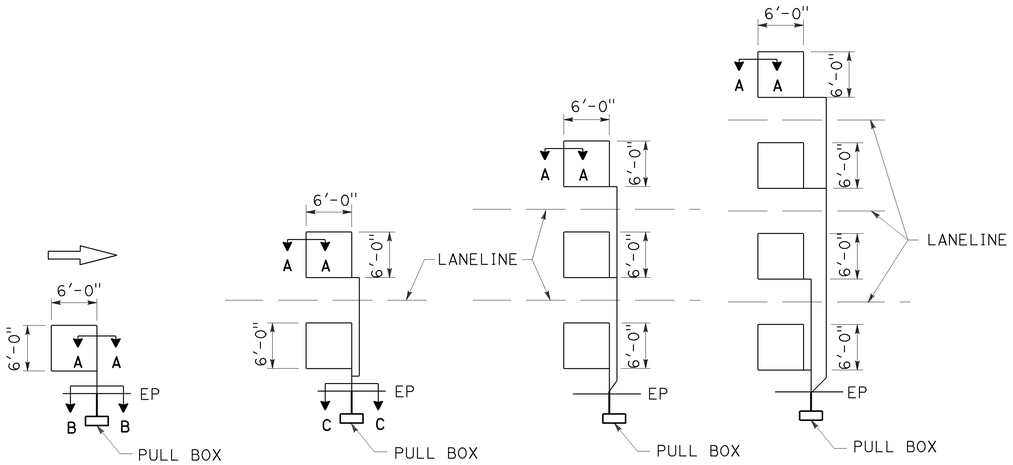

TYPE 1A INSTALLATION | TYPE 2A INSTALLATION | TYPE 3A INSTALLATION | TYPE 4A INSTALLATION

SAWCUT DETAILS

Type A loop detector configurations illustrated

1. 1A thru 4A = 1 Type A loop configuration in each lane.
2. 1B thru 4B = 1 Type B loop configuration in each lane.
3. 1C = 1 Type C loop configuration entering lanes as required.
4. 1D thru 4D = 1 Type D loop configuration in each lane.
5. 1E thru 4E = 1 Type E loop configuration in each lane.
6. 1Q thru 4Q = 1 Type Q loop configuration in each lane.

Use Type A, B, C, D, E or Q loop detector configurations only when specified or shown on plans.

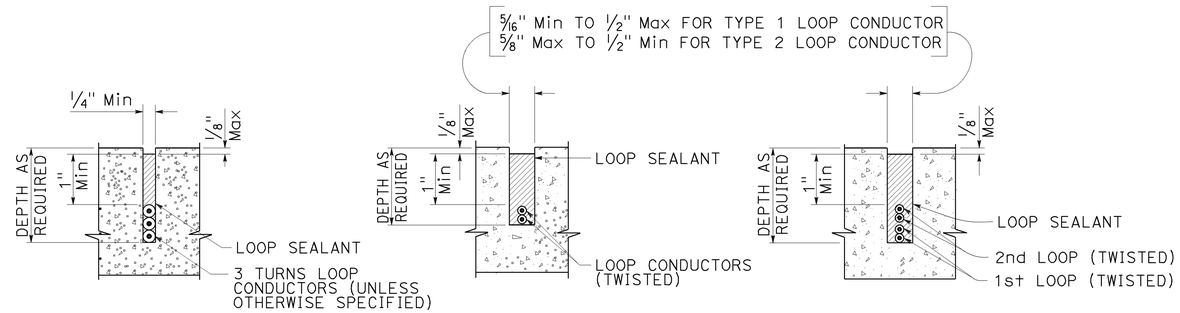

SECTION A-A | SECTION B-B | SECTION C-C

SLOT DETAILS - TYPE 1 AND TYPE 2 LOOP CONDUCTOR

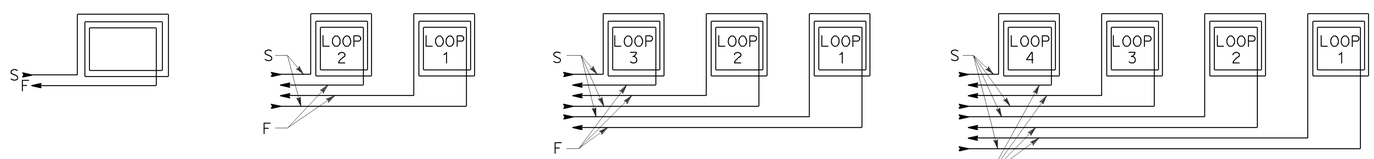

WINDING DETAILS

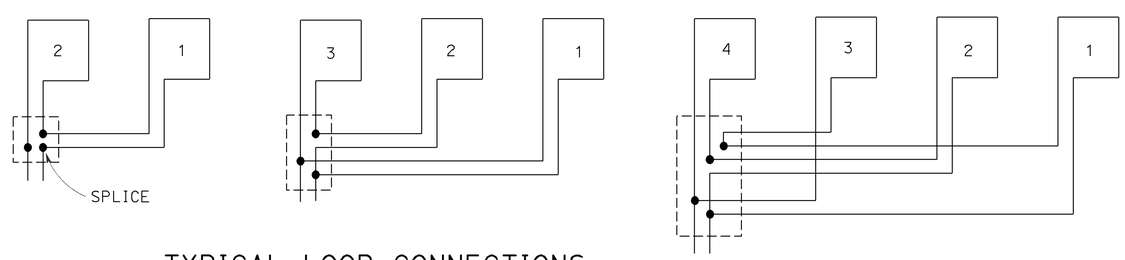

TYPICAL LOOP CONNECTIONS

Dashed lines represent the pull box

ABBREVIATIONS:

S - START
F - FINISH

STATE OF CALIFORNIA
DEPARTMENT OF TRANSPORTATION

ELECTRICAL SYSTEMS (LOOP DETECTORS)

NO SCALE

RSP ES-5A DATED OCTOBER 30, 2015 SUPERSEDES STANDARD PLAN ES-5A DATED MAY 20, 2011 - PAGE 448 OF THE STANDARD PLANS BOOK DATED 2010.

REVISED STANDARD PLAN RSP ES-5A

8-24-15

Dist	COUNTY	ROUTE	POST MILES TOTAL PROJECT	SHEET No.	TOTAL SHEETS
12	Ora	91	R1.0, 5.4	103	134

Theresa Gabriel
REGISTERED ELECTRICAL ENGINEER

October 30, 2015
PLANS APPROVAL DATE

REGISTERED PROFESSIONAL ENGINEER
Theresa Aziz Gabriel
No. E15129
Exp. 6-30-16
ELECTRICAL
STATE OF CALIFORNIA

THE STATE OF CALIFORNIA OR ITS OFFICERS OR AGENTS SHALL NOT BE RESPONSIBLE FOR THE ACCURACY OR COMPLETENESS OF SCANNED COPIES OF THIS PLAN SHEET.

TO ACCOMPANY PLANS DATED 02-29-16

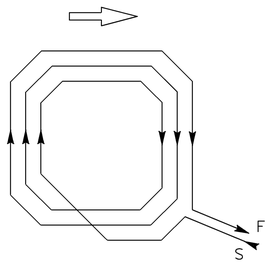

WINDING DETAIL

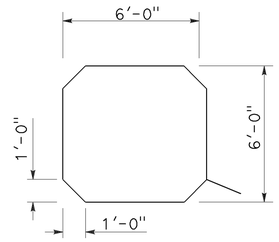

SAWCUT DETAIL

TYPE A LOOP DETECTOR CONFIGURATION

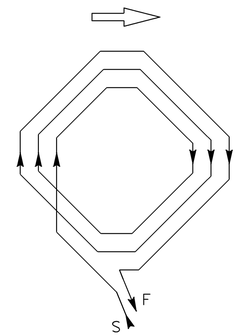

WINDING DETAIL

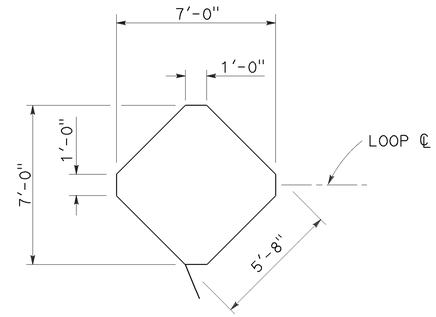

SAWCUT DETAIL

TYPE B LOOP DETECTOR CONFIGURATION

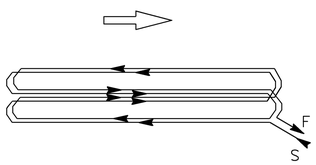

WINDING DETAIL

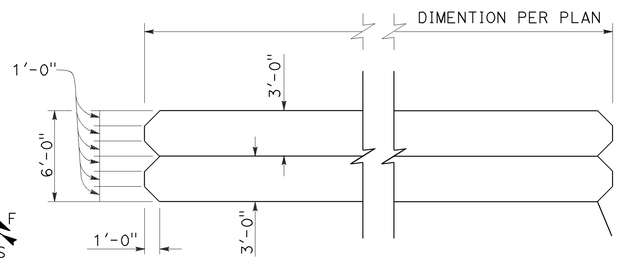

SAWCUT DETAIL

TYPE C LOOP DETECTOR CONFIGURATION

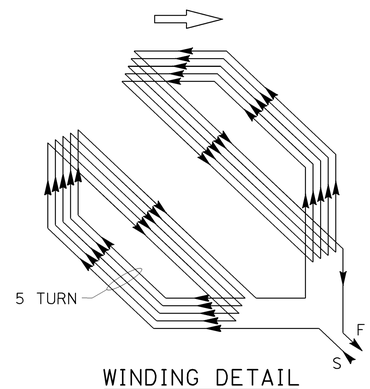

WINDING DETAIL

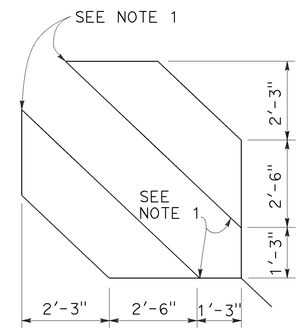

SAWCUT DETAIL

TYPE D LOOP DETECTOR CONFIGURATION

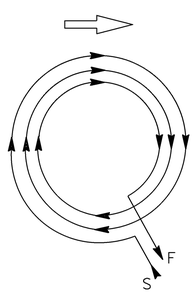

WINDING DETAIL

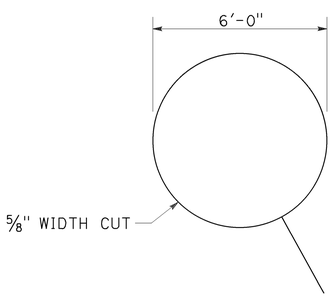

SAWCUT DETAIL

TYPE E LOOP DETECTOR CONFIGURATION

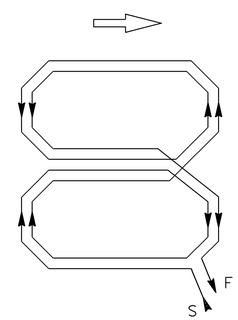

WINDING DETAIL

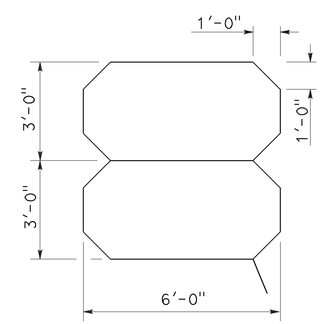

SAWCUT DETAIL

TYPE Q LOOP DETECTOR CONFIGURATION

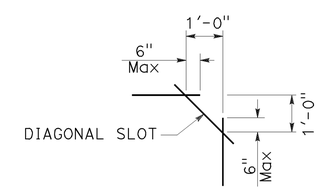

PLAN VIEW OF DIAGONAL SLOT AT CORNERS

NOTES:

1. Round corners of acute angle sawcuts to prevent damage to conductors.
2. Typical distance separating loops from edge to edge is 10' for Type A, B, D and E installation in single lane.
3. Use Type D loops for limit line detector installations in left turn and bicycle lanes.

STATE OF CALIFORNIA
DEPARTMENT OF TRANSPORTATION

ELECTRICAL SYSTEMS (DETECTORS)

NO SCALE

RSP ES-5B DATED OCTOBER 30, 2015 SUPERSEDES RSP ES-5B DATED JULY 19, 2013 AND STANDARD PLAN ES-5B DATED MAY 20, 2011 - PAGE 449 OF THE STANDARD PLANS BOOK DATED 2010.

REVISED STANDARD PLAN RSP ES-5B

2010 REVISED STANDARD PLAN RSP ES-5B

9-25-15

Dist	COUNTY	ROUTE	POST MILES TOTAL PROJECT	SHEET No.	TOTAL SHEETS
12	Ora	91	R1.0, 5.4	104	134

Theresa Gabriel
REGISTERED ELECTRICAL ENGINEER

October 30, 2015
PLANS APPROVAL DATE

REGISTERED PROFESSIONAL ENGINEER
Theresa Aziz Gabriel
No. E15129
Exp. 6-30-16
ELECTRICAL
STATE OF CALIFORNIA

THE STATE OF CALIFORNIA OR ITS OFFICERS OR AGENTS SHALL NOT BE RESPONSIBLE FOR THE ACCURACY OR COMPLETENESS OF SCANNED COPIES OF THIS PLAN SHEET.

TO ACCOMPANY PLANS DATED 02-29-16

NOTES:

1. Back casting shape to fit curvature of pole.
2. Provide cover fitting for top of post, when PBA is mounted on push button assembly post.
3. Install push button on crosswalk side of standard.
4. Use R10 series regulatory signs and plaques for pedestrian and bicycle facilities.

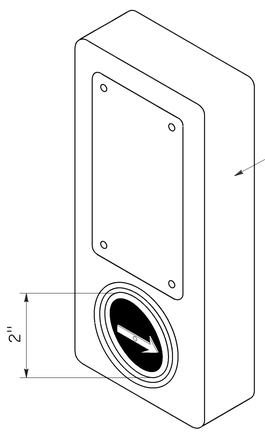

ACCESSIBLE PEDESTRIAN SIGNAL

DETAIL A

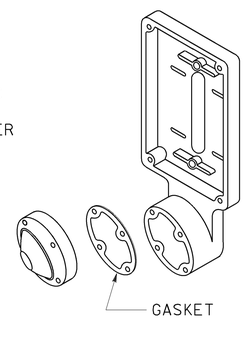

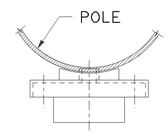

TOP VIEW

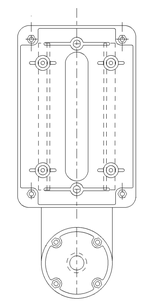

FRONT VIEW

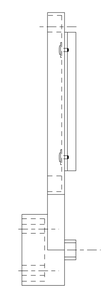

SIDE VIEW

TYPE B PUSH BUTTON ASSEMBLY

DETAIL B

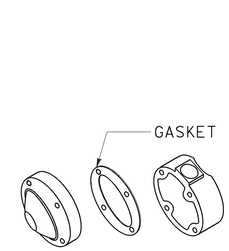

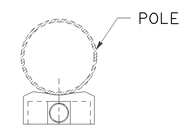

TOP VIEW

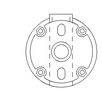

FRONT VIEW

SIDE VIEW

TYPE C PUSH BUTTON ASSEMBLY

DETAIL C

STATE OF CALIFORNIA
DEPARTMENT OF TRANSPORTATION

ELECTRICAL SYSTEMS (ACCESSIBLE PEDESTRIAN SIGNAL AND PUSH BUTTON ASSEMBLIES)

NO SCALE

RSP ES-5C DATED OCTOBER 30, 2015 SUPERSEDES RSP ES-5C DATED JULY 19, 2013 AND STANDARD PLAN ES-5C DATED MAY 20, 2011 - PAGE 450 OF THE STANDARD PLANS BOOK DATED 2010.

REVISED STANDARD PLAN RSP ES-5C

2010 REVISED STANDARD PLAN RSP ES-5C

8-24-15

Dist	COUNTY	ROUTE	POST MILES TOTAL PROJECT	SHEET No.	TOTAL SHEETS
12	Ora	91	R1.0, 5.4	105	134

Theresa Gabriel
REGISTERED ELECTRICAL ENGINEER

October 30, 2015
PLANS APPROVAL DATE

REGISTERED PROFESSIONAL ENGINEER Theresa Aziz Gabriel No. E15129 Exp. 6-30-16 ELECTRICAL STATE OF CALIFORNIA

THE STATE OF CALIFORNIA OR ITS OFFICERS OR AGENTS SHALL NOT BE RESPONSIBLE FOR THE ACCURACY OR COMPLETENESS OF SCANNED COPIES OF THIS PLAN SHEET.

TO ACCOMPANY PLANS DATED 02-29-16

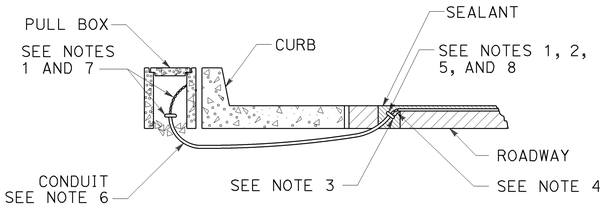

TYPE A
CURB TERMINATION DETAIL

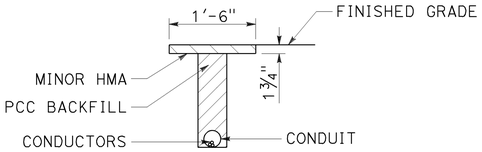

"T" TRENCH DETAIL T

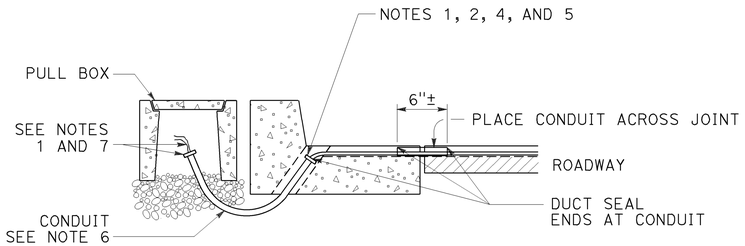

CROSS SECTION

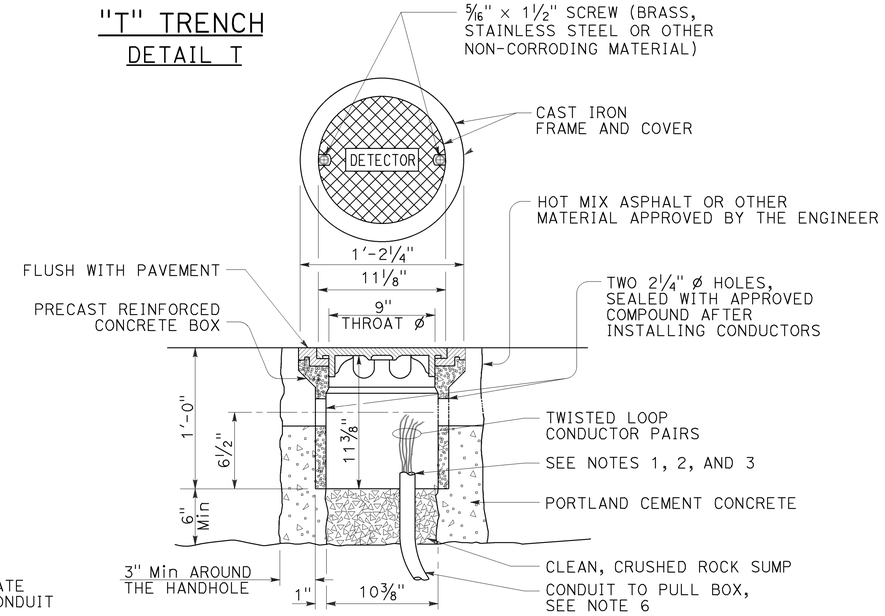

DETECTOR HANDHOLE DETAIL

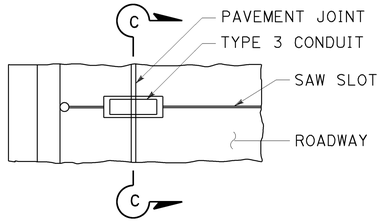

PLAN VIEW

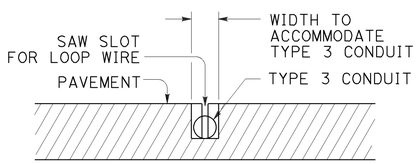

SECTION C-C

TYPE B
CURB TERMINATION DETAIL

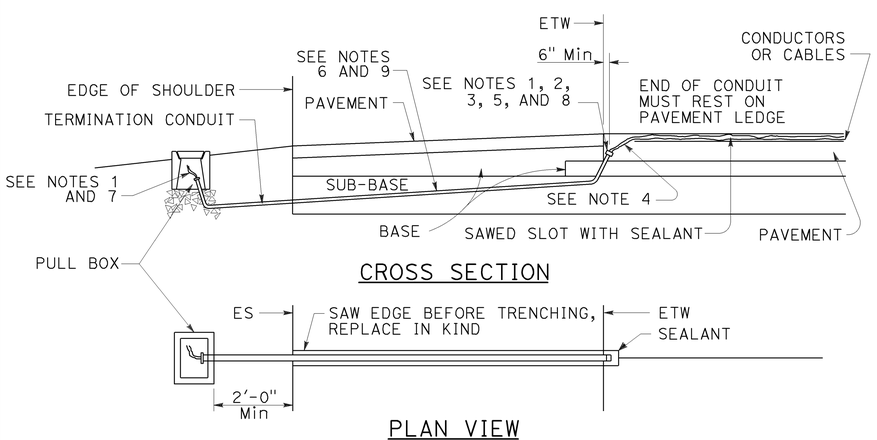

CROSS SECTION

PLAN VIEW

SHOULDER TERMINATION DETAILS

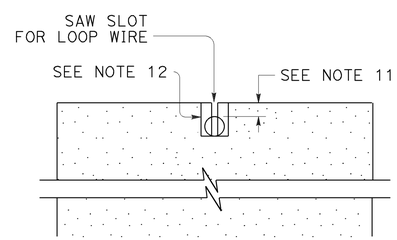

SECTION A-A

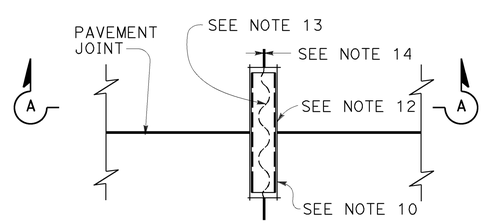

PLAN VIEW

TYPICAL LOOP LEAD-IN DETAIL AT PAVEMENT JOINT

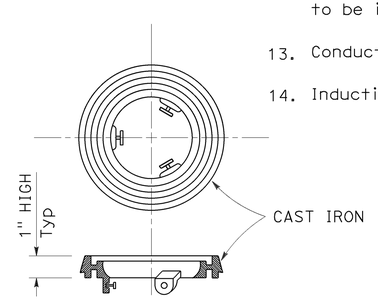

LOCKING GRADE RING

NOTES:

1. Bushing shall be used at end of conduit.
2. Tape detector conductors or cables 3" each side of bushings.
3. Install duct seal compound to each end of termination conduit before installing sealant.
4. Round all sharp edges where detector conductors or cables have to pass.
5. End of conduit shall be 3⅛" below roadway surface.
6.

Conduit size	Loop conductors
1"C minimum	1 to 2 pairs
1½"C minimum	3 to 4 pairs
2"C minimum	5 or more pairs

7. Splice detector conductors or cables to detector lead-in-cable.
8. Location of detector handhole when shown on plans.
9. When the shoulder and traveled way are paved with the same material and there is no joint between them, the conduit shall extend only 2'-0" into the shoulder pavement.
10. ¾"C, Type 3 conduit 6" long minimum, plug both ends with duct compound to keep out sealant.
11. ½" Minimum between top of conduit and pavement surface.
12. Sawcut shall not exceed 1" in width and ⅛" longer than conduit to be installed.
13. Conductors with ½" minimum slack inside conduit.
14. Inductive loop detector saw slot.

STATE OF CALIFORNIA
DEPARTMENT OF TRANSPORTATION

ELECTRICAL SYSTEMS (CURB AND SHOULDER TERMINATION, TRENCH, AND HANDHOLE DETAILS)

NO SCALE

RSP ES-5D DATED OCTOBER 30, 2015 SUPERSEDES RSP ES-5D DATED JULY 19, 2013 AND STANDARD PLAN ES-5D DATED MAY 20, 2011 - PAGE 451 OF THE STANDARD PLANS BOOK DATED 2010.

REVISED STANDARD PLAN RSP ES-5D

2010 REVISED STANDARD PLAN RSP ES-5D

8-19-15

Dist	COUNTY	ROUTE	POST MILES TOTAL PROJECT	SHEET No.	TOTAL SHEETS
12	Ora	91	R1.0, 5.4	106	134

REGISTERED CIVIL ENGINEER

October 30, 2015
PLANS APPROVAL DATE

REGISTERED PROFESSIONAL ENGINEER
Stanley P. Johnson
No. C57793
Exp. 3-31-16
CIVIL
STATE OF CALIFORNIA

THE STATE OF CALIFORNIA OR ITS OFFICERS OR AGENTS SHALL NOT BE RESPONSIBLE FOR THE ACCURACY OR COMPLETENESS OF SCANNED COPIES OF THIS PLAN SHEET.

TO ACCOMPANY PLANS DATED 02-29-16

2010 REVISED STANDARD PLAN RSP ES-6A

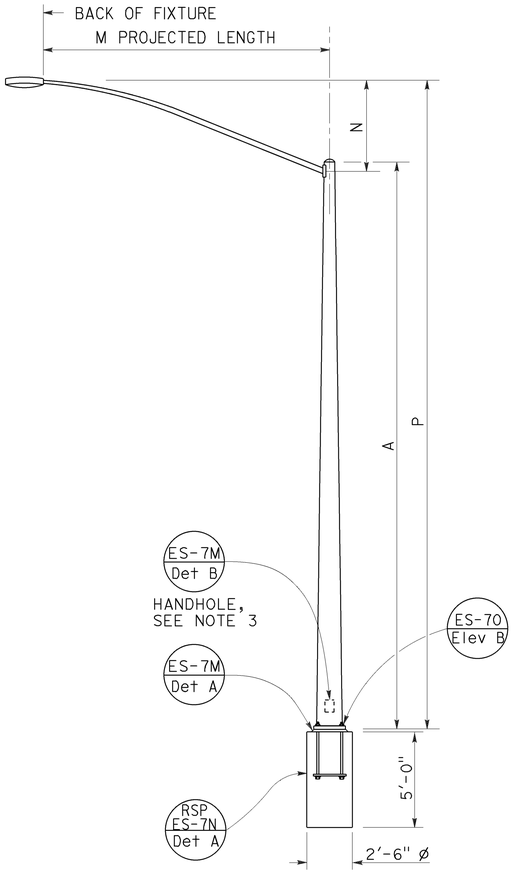

TYPE 15 AND TYPE 21
ELEVATION A

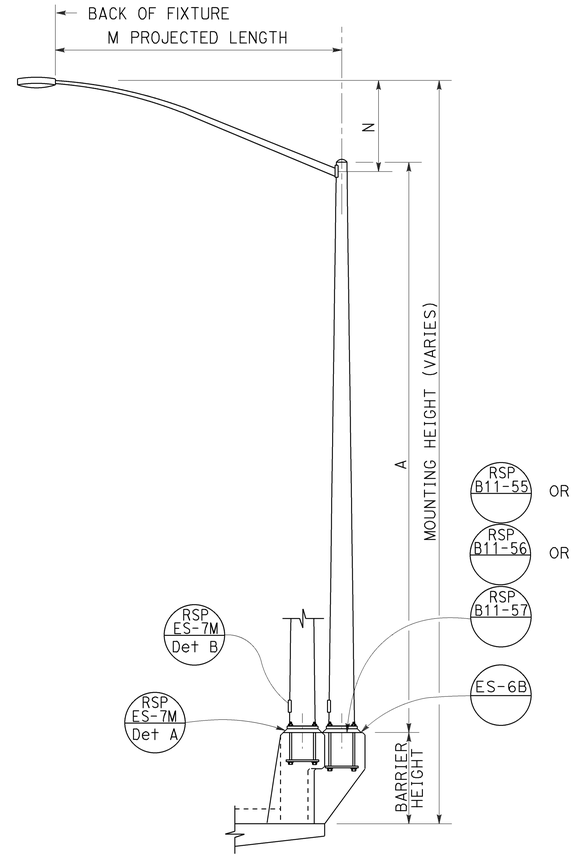

TYPE 15 AND TYPE 21 BARRIER RAIL MOUNTED
ELEVATION B

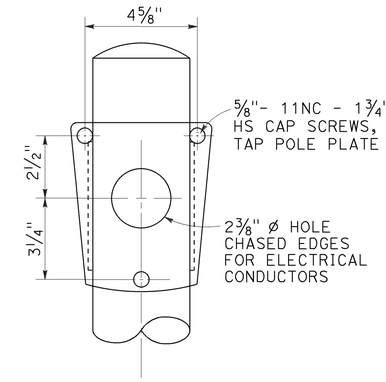

FRONT VIEW

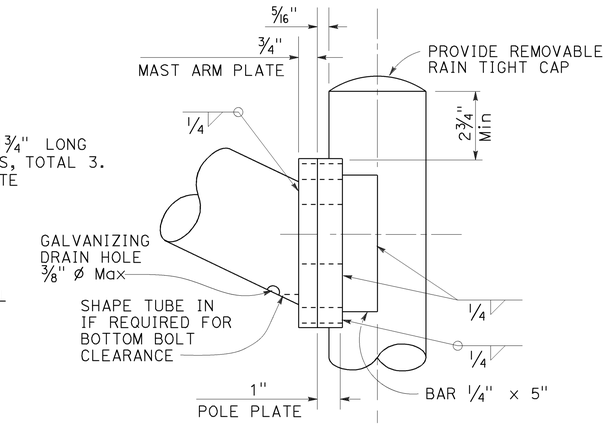

SIDE VIEW

LUMINAIRE MAST ARM CONNECTION
DETAIL R

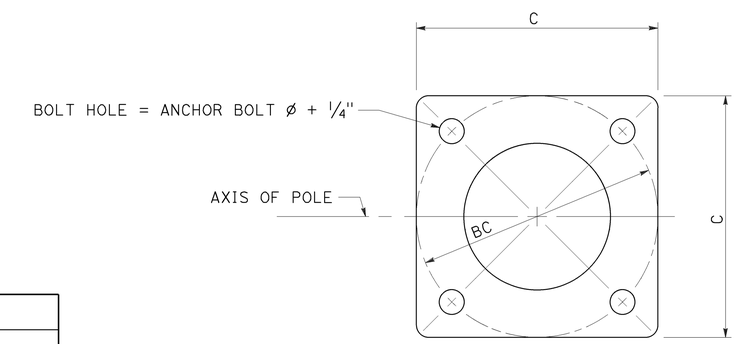

BASE PLATE
DETAIL A

POLE TYPE	POLE DATA				BASE PLATE DATA			
	A HEIGHT	Min OD BASE	Min OD TOP	WALL THICKNESS	C	BC = BOLT CIRCLE	THICKNESS	ANCHOR BOLT SIZE
15	30'-0"	8"	3 11/16"	0.1196"	1'-0"	1'-0"	2"	1" ø x 3'-0" *
21	35'-0"	8 5/8"	3 9/16"	0.1793"				1 1/4" ø x 3'-0" *

* FOR BARRIER RAIL BOLTS, SEE STANDARD PLAN ES-6B.

LUMINAIRE MAST ARM DATA					
M PROJECTED LENGTH	N RISE	Min OD AT POLE	NOMINAL THICKNESS	P TYPE 15	P TYPE 21
6'-0"	2'-0"±	3 1/4"	0.1196"	31'-6"±	36'-6"±
8'-0"	2'-6"±	3 1/2"		32'-0"±	37'-0"±
10'-0"	3'-3"±	3 7/8"		32'-9"±	37'-9"±
12'-0"	4'-3"±			33'-9"±	38'-9"±
15'-0"	4'-9"±	4 1/4"		34'-3"±	39'-3"±

NOTES:

1. ▭ Indicates mast arm length to be used unless otherwise noted on the plans.
2. For Type 15-SB, use Type 15 standard with Type 30 slip base plate details, see Revised Standard Plan RSP ES-6F.
3. Handhole shall be located on the downstream side of traffic.
4. For additional notes and details, see Revised Standard Plans RSP ES-7M and RSP ES-7N.

STATE OF CALIFORNIA
DEPARTMENT OF TRANSPORTATION

ELECTRICAL SYSTEMS (LIGHTING STANDARD, TYPES 15 AND 21)

NO SCALE

RSP ES-6A DATED OCTOBER 30, 2015 SUPERSEDES STANDARD PLAN ES-6A DATED MAY 20, 2011 - PAGE 452 OF THE STANDARD PLANS BOOK DATED 2010.

REVISED STANDARD PLAN RSP ES-6A

8-24-15

Dist	COUNTY	ROUTE	POST MILES TOTAL PROJECT	SHEET No.	TOTAL SHEETS
12	Ora	91	R1.0, 5.4	107	134

REGISTERED CIVIL ENGINEER

October 30, 2015
PLANS APPROVAL DATE

REGISTERED PROFESSIONAL ENGINEER
Stanley P. Johnson
No. C57793
Exp. 3-31-16
CIVIL
STATE OF CALIFORNIA

THE STATE OF CALIFORNIA OR ITS OFFICERS OR AGENTS SHALL NOT BE RESPONSIBLE FOR THE ACCURACY OR COMPLETENESS OF SCANNED COPIES OF THIS PLAN SHEET.

TO ACCOMPANY PLANS DATED 02-29-16

2010 REVISED STANDARD PLAN RSP ES-6E

LUMINAIRE MAST ARM DATA			
PROJECTED LENGTH	THICKNESS	MINIMUM OD AT POLE	MOUNTING HEIGHT
* 6'-0"	0.1196"	3¼"	36'-9"±
* 8'-0"		3½"	37'-3"±
* 10'-0"		3¾"	38'-0"±
* 12'-0"			39'-0"±
* 15'-0"		4¼"	39'-6"±
** 20'-0"	0.1793"	5"	37'-0"±

* TYPE 30
** TYPE 31

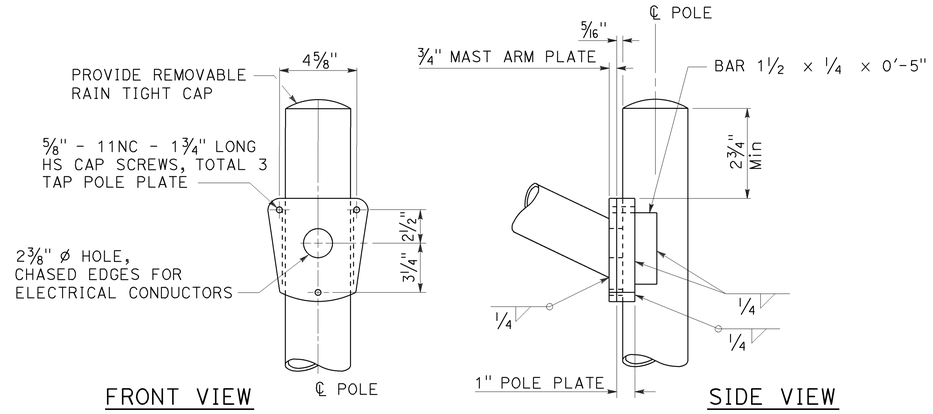

TYPE 30
DETAIL A

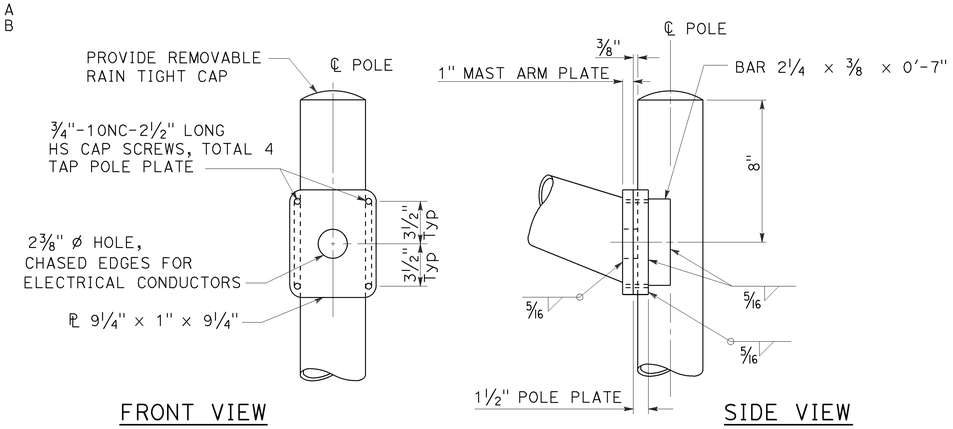

TYPE 31
DETAIL B

NOTES:

1. For slip base plate details, see Revised Standard Plan RSP ES-6F.
2. For Type 30 fixed base use Type 15 base plate and foundation shown on Revised Standard Plan RSP ES-6A. Use 1¼" Dia x 3'-6" anchor bolts.
3. For Type 31 fixed base use Type 32 base plate, anchor bolts and foundation on Revised Standard Plan RSP ES-6G.
4. Handhole shall be located on the downstream side of traffic.
5. For additional notes and details, see Revised Standard Plans RSP ES-7M and RSP ES-7N.

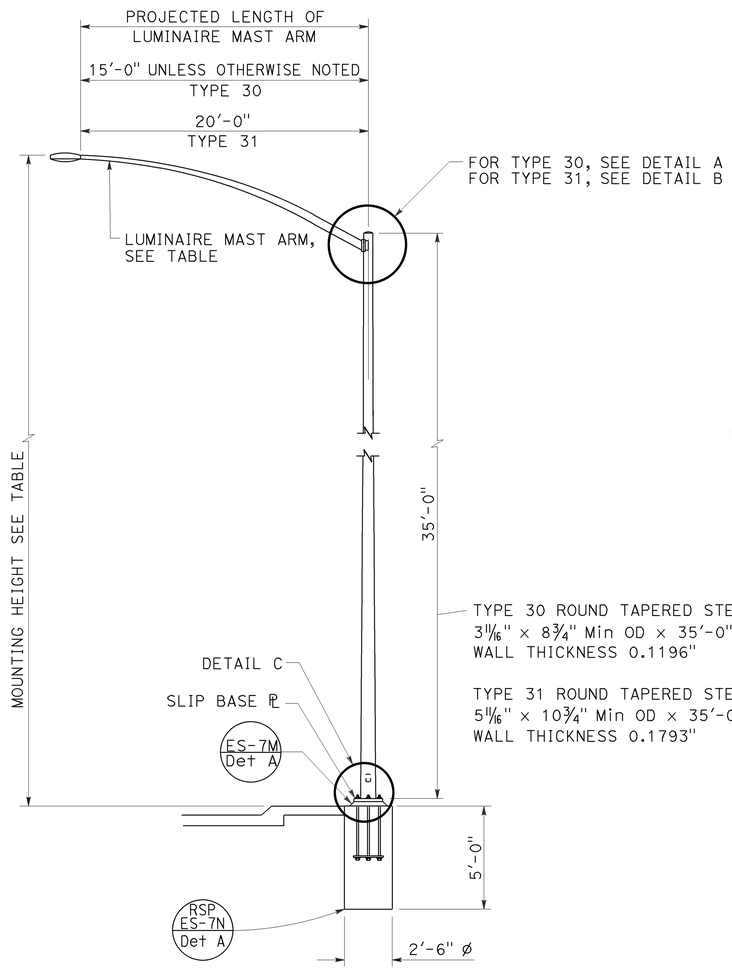

ELEVATION A

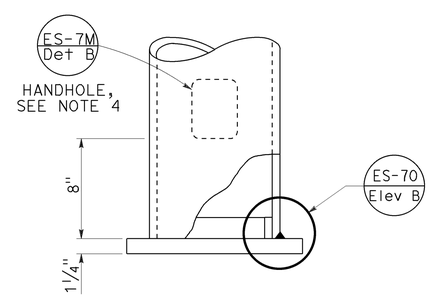

DETAIL C

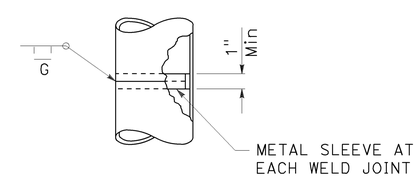

POLE SPLICE

STATE OF CALIFORNIA
DEPARTMENT OF TRANSPORTATION

ELECTRICAL SYSTEMS (LIGHTING STANDARD, TYPES 30 AND 31)

NO SCALE

RSP ES-6E DATED OCTOBER 30, 2015 SUPERSEDES STANDARD PLAN ES-6E DATED MAY 20, 2011 - PAGE 456 OF THE STANDARD PLANS BOOK DATED 2010.

REVISED STANDARD PLAN RSP ES-6E

8-24-15

Dist	COUNTY	ROUTE	POST MILES TOTAL PROJECT	SHEET No.	TOTAL SHEETS
12	Ora	91	R1.0, 5.4	108	134

REGISTERED CIVIL ENGINEER

October 30, 2015
PLANS APPROVAL DATE

REGISTERED PROFESSIONAL ENGINEER
Stanley P. Johnson
No. C57793
Exp. 3-31-16
CIVIL
STATE OF CALIFORNIA

THE STATE OF CALIFORNIA OR ITS OFFICERS OR AGENTS SHALL NOT BE RESPONSIBLE FOR THE ACCURACY OR COMPLETENESS OF SCANNED COPIES OF THIS PLAN SHEET.

TO ACCOMPANY PLANS DATED 02-29-16

2010 REVISED STANDARD PLAN RSP ES-7A

NOTES:

1. For additional notes, details and data for Type 15TS and Type 21TS Standards, see Revised Standard Plan RSP ES-6A.
2. Handhole shall be located on the downstream side of traffic.

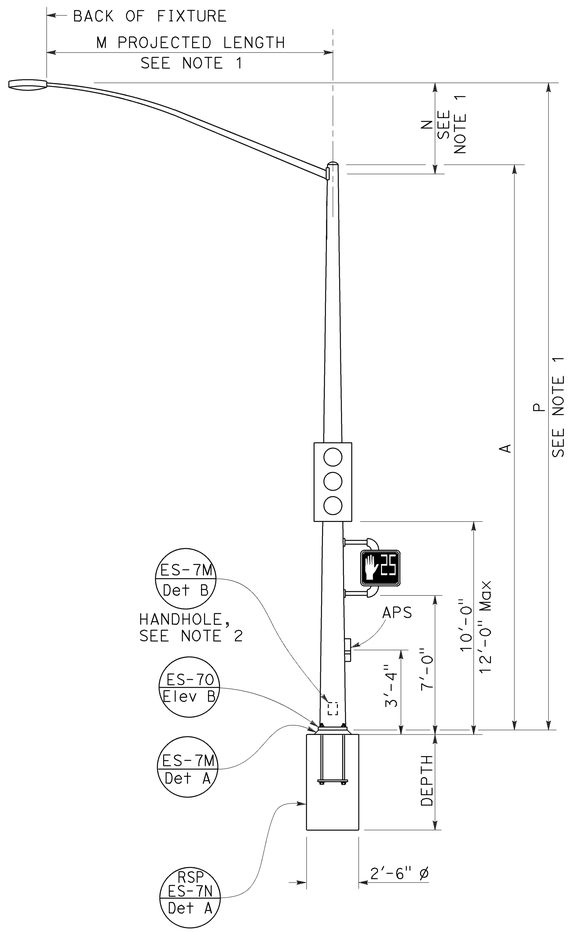

TYPE 15TS AND 21TS STANDARD

ELEVATION A

(See Note 1)

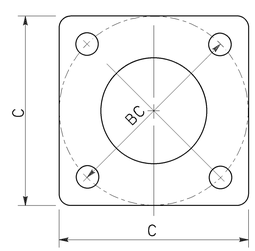

BASE PLATE

TYPE 15TS AND 21TS

DETAIL A

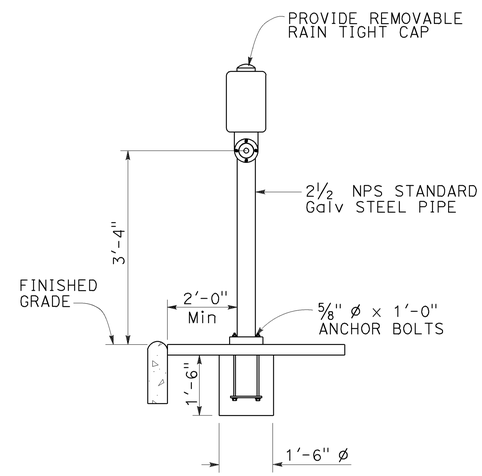

ELEVATION

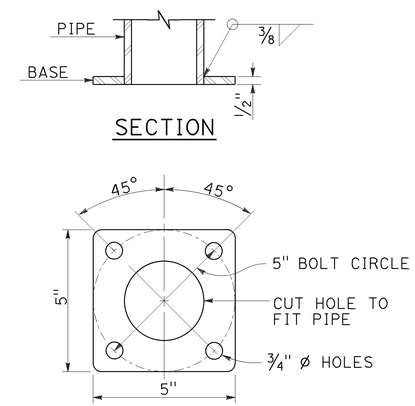

BASE PLATE

PBA POST

PUSH BUTTON ASSEMBLY POST

DETAIL B

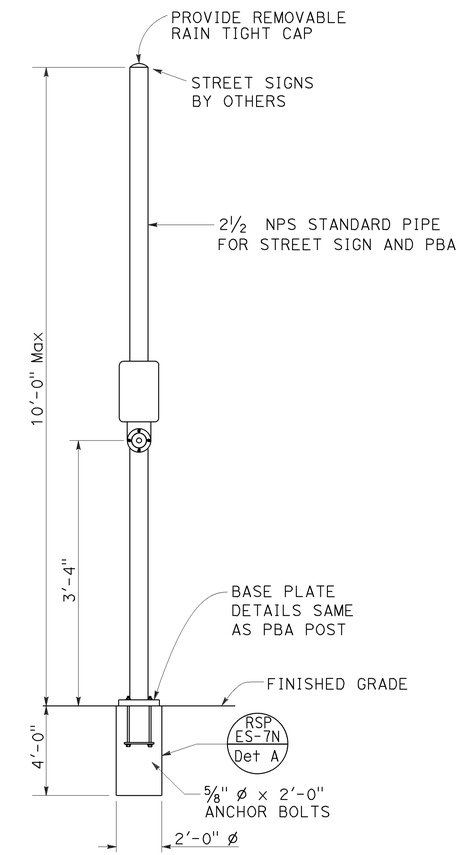

COMBINED STREET SIGN

PUSH BUTTON ASSEMBLY POST

DETAIL C

POLE TYPE	POLE DATA				BASE PLATE DATA				CIDH
	A HEIGHT	Min OD BASE	Min OD TOP	WALL THICKNESS	C	BC = BOLT CIRCLE	THICKNESS	ANCHOR BOLT SIZE	DEPTH
15TS	30'-0"	8"	3 11/16"	0.1793"	1'-1½"	1'-0"	2"	1½" ø x 42"	7'-6"
21TS	35'-0"	9⅜"	3 9/16"		1'-3"	1'-2"			8'-6"

STATE OF CALIFORNIA
DEPARTMENT OF TRANSPORTATION

ELECTRICAL SYSTEMS (SIGNAL AND LIGHTING STANDARD, TYPE TS, AND PUSH BUTTON ASSEMBLY POST)

NO SCALE

RSP ES-7A DATED OCTOBER 30, 2015 SUPERSEDES RSP ES-7A DATED JULY 19, 2013 AND STANDARD PLAN ES-7A DATED MAY 20, 2011 - PAGE 462 OF THE STANDARD PLANS BOOK DATED 2010.

REVISED STANDARD PLAN RSP ES-7A

8-24-15

Dist	COUNTY	ROUTE	POST MILES TOTAL PROJECT	SHEET No.	TOTAL SHEETS
12	Ora	91	R1.0, 5.4	109	134

REGISTERED CIVIL ENGINEER

October 30, 2015
PLANS APPROVAL DATE

REGISTERED PROFESSIONAL ENGINEER
Stanley P. Johnson
No. C57793
Exp. 3-31-16
CIVIL
STATE OF CALIFORNIA

THE STATE OF CALIFORNIA OR ITS OFFICERS OR AGENTS SHALL NOT BE RESPONSIBLE FOR THE ACCURACY OR COMPLETENESS OF SCANNED COPIES OF THIS PLAN SHEET.

TO ACCOMPANY PLANS DATED 02-29-16

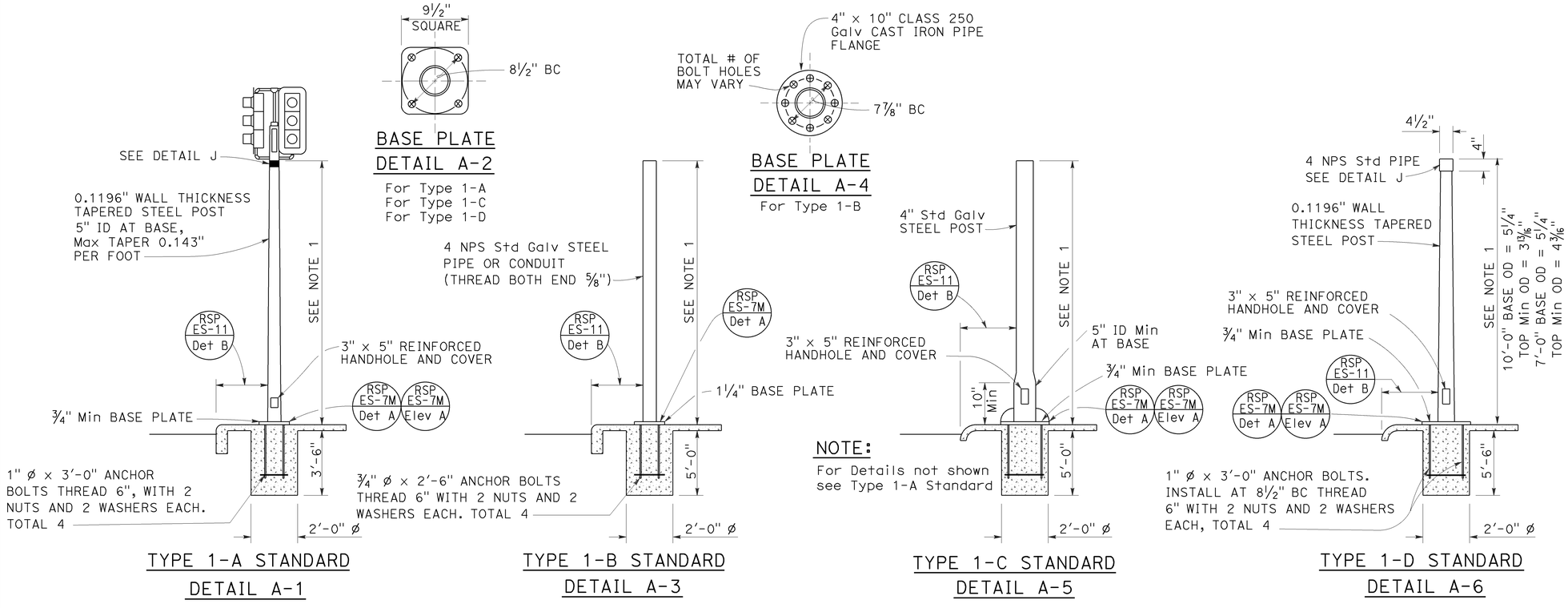

TYPE 1 SIGNAL STANDARDS
DETAIL A

NOTES:

1. Standards shall be 10'-0" ± 2" for vehicle signals and 7'-0" ± 2" for pedestrian signals unless shorter pole is noted on project plans.
2. Top of standards shall be 4½" OD.
3. Conduits shall extend 2" maximum above finished surface of foundation and for Types 1-A, 1-C and 1-D shall be sloped toward handhole.
4. Anchor bolts shall be bonded to conduit or grounding conductor.
5. For additional notes and details, see Revised Standard Plans RSP ES-7M and RSP ES-7N.
6. Pour foundation concrete against undisturbed soil.
7. For standards with handhole, locate in the downstream side of traffic.
8. Coupling nuts to be used only when shown or specified on project plans.

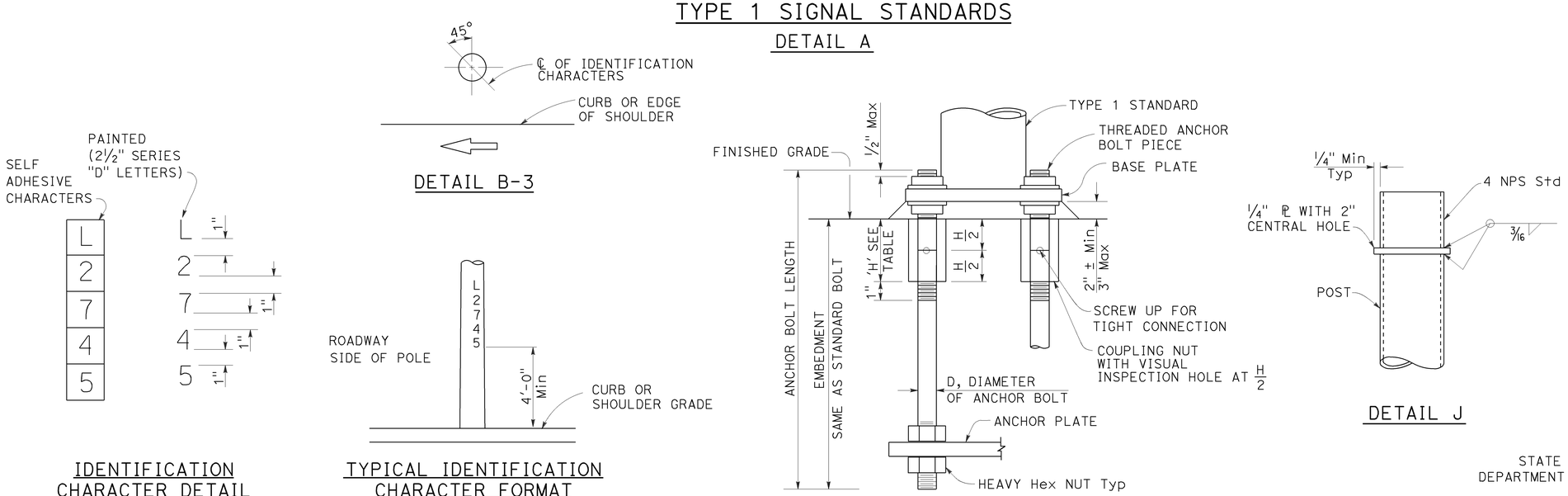

IDENTIFICATION CHARACTER DETAIL
DETAIL B-1

TYPICAL IDENTIFICATION CHARACTER FORMAT
DETAIL B-2

LOCATION OF EQUIPMENT IDENTIFICATION CHARACTERS ON STANDARDS AND POSTS
DETAIL B

ANCHOR BOLTS WITH SLEEVE NUTS
DETAIL C
(See Note 8)

COUPLING NUT TABLE	
BOLT DIAMETER	NUT TABLE THICKNESS 'H'
¾"	2¼"
1"	3'

STATE OF CALIFORNIA
DEPARTMENT OF TRANSPORTATION

ELECTRICAL SYSTEMS (SIGNAL AND LIGHTING STANDARD, TYPE 1 AND EQUIPMENT IDENTIFICATION CHARACTERS)

NO SCALE

RSP ES-7B DATED OCTOBER 30, 2015 SUPERSEDES STANDARD PLAN ES-7B DATED MAY 20, 2011 - PAGE 463 OF THE STANDARD PLANS BOOK DATED 2010.

REVISED STANDARD PLAN RSP ES-7B

2010 REVISED STANDARD PLAN RSP ES-7B

10-8-15

Dist	COUNTY	ROUTE	POST MILES TOTAL PROJECT	SHEET No.	TOTAL SHEETS
12	Ora	91	R1.0, 5.4	110	134

REGISTERED CIVIL ENGINEER

October 30, 2015

PLANS APPROVAL DATE

REGISTERED PROFESSIONAL ENGINEER Stanley P. Johnson No. C57793 Exp. 3-31-16 CIVIL STATE OF CALIFORNIA

THE STATE OF CALIFORNIA OR ITS OFFICERS OR AGENTS SHALL NOT BE RESPONSIBLE FOR THE ACCURACY OR COMPLETENESS OF SCANNED COPIES OF THIS PLAN SHEET.

TO ACCOMPANY PLANS DATED 02-29-16

NOTE:

Handhole shall be located on the downstream side of traffic.

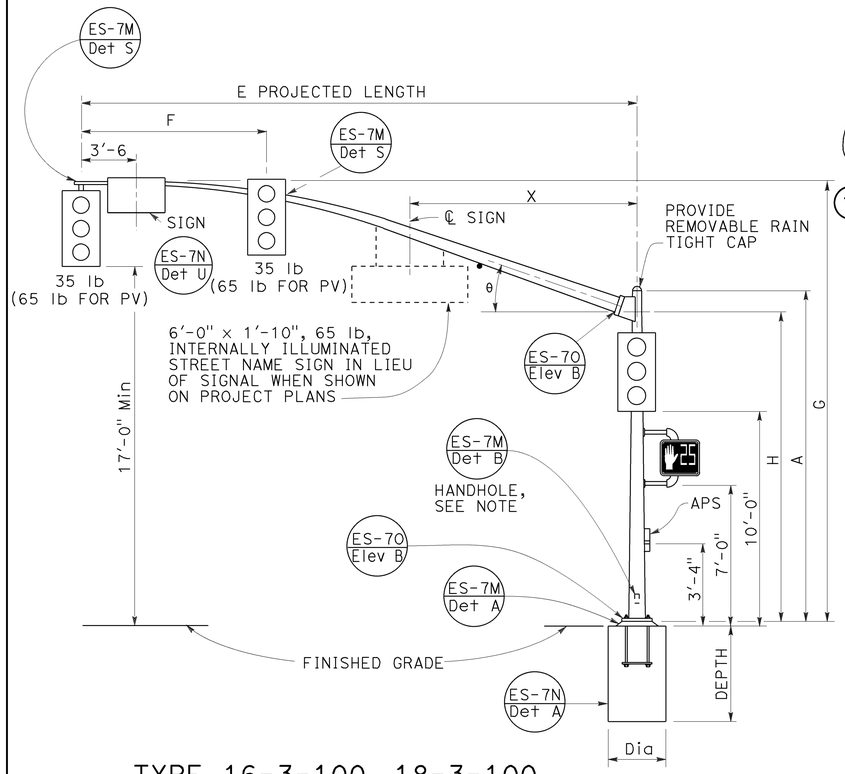

TYPE 16-3-100, 18-3-100, 23-3-100, 27-3-100

ELEVATION A

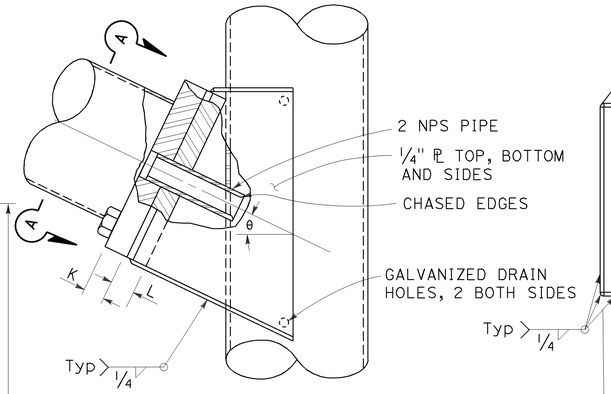

ELEVATION C

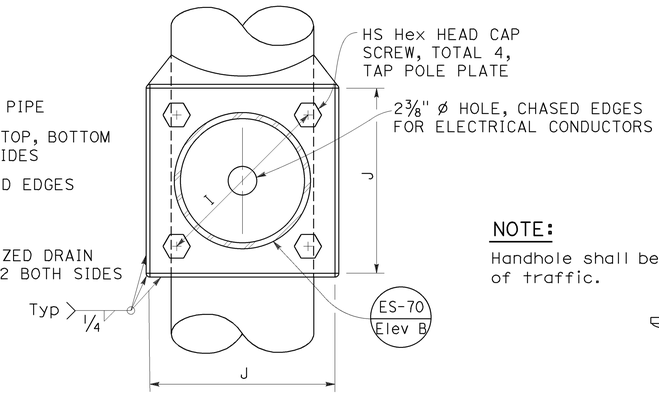

VIEW A-A

SIGNAL MAST ARM CONNECTION

DETAIL A

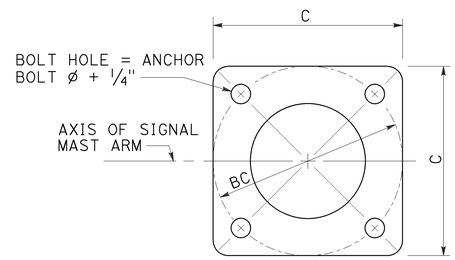

BASE PLATE

DETAIL B

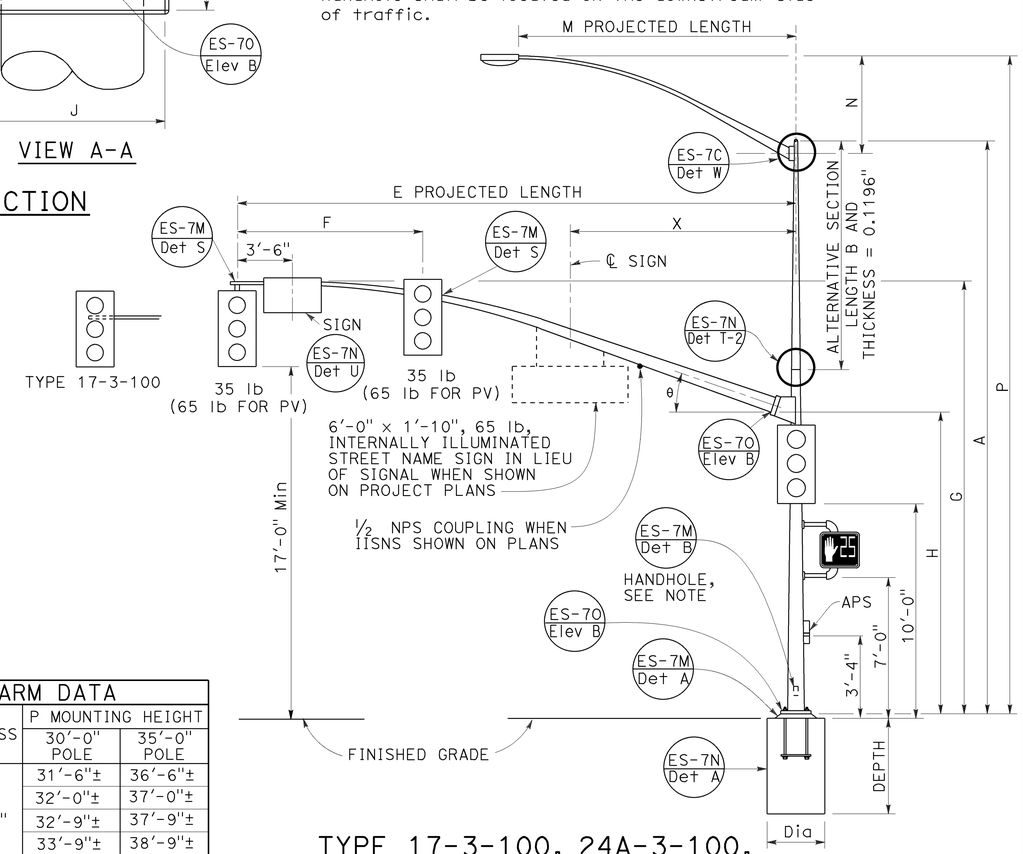

TYPE 17-3-100, 24A-3-100, 19-3-100, 26-3-100, 19A-3-100, 26A-3-100, 24-3-100

ELEVATION B

SIGNAL MAST ARM DATA												
E PROJECTED LENGTH	F Min SPACING	G MOUNTING HEIGHT	H	Min OD AT POLE	THICKNESS	I BOLT CIRCLE	HS CAP SCREWS	J PLATE SIZE	K MAST ARM ℙ THICKNESS	L POLE ℙ THICKNESS	θ	X Max
15'-0"	8'-0"	21'-8"±	17'-6"	7 3/8"	0.1793"	12"	1 1/4"-7NC-3"	1'-0"	1 1/4"	1 1/2"	23°	-
20'-0"		21'-8"±		7 3/8"								
25'-0"	12'-0"	22'-8"±	16'-0"	7 3/8"	0.2391"							10'-6"
30'-0"		23'-0"±		8"								
35'-0"	14'-0"			8 3/4"		13"		1'-1"	1 1/2"	1 3/4"	21°	
40'-0"	15'-0"			9 3/8"							15°	13'-0"
45'-0"		23'-8"±		10 1/16"								

LUMINAIRE MAST ARM DATA					
M PROJECTED LENGTH	N RISE	Min OD AT POLE	THICKNESS	P MOUNTING HEIGHT 30'-0" POLE	P MOUNTING HEIGHT 35'-0" POLE
6'-0"	2'-0"±	3 1/4"	0.1196"	31'-6"±	36'-6"±
8'-0"	2'-6"±	3 1/2"		32'-0"±	37'-0"±
10'-0"	3'-3"±	3 7/8"		32'-9"±	37'-9"±
12'-0"	4'-3"±			33'-9"±	38'-9"±
15'-0"	4'-9"±	4 1/4"		34'-3"±	39'-3"±

POLE TYPE	LOAD CASE	WIND VELOCITY (mph)	POLE DATA: A HEIGHT	Min OD BASE	Min OD TOP	THICKNESS	ALTERNATIVE SECTION B LENGTH	BOTTOM	TOP	BASE PLATE DATA: C	BC = BOLT CIRCLE	THICKNESS	ANCHOR BOLT SIZE	LUMINAIRE MAST ARM	SIGNAL MAST ARM	CIDH PILE FOUNDATION: DIAMETER	DEPTH	REINFORCED
16-3-100	3	100	18'-6"	10 3/4"	8 1/16"	0.1793"	NONE			1'-5 1/2"	1'-5 1/2"	3"	1 1/2" ø x 42"	NONE	15'-0", [20'-0"]	3'-0"	8'-6"	YES
17-3-100			30'-0"		6 7/16"		10'-0"	7 7/8"	6 7/16"					6'-15' [12'-0"]				
18-3-100			17'-0"	1'-0"	8 5/16"	0.2391"	NONE			1'-7"			2" ø x 42"	NONE	25'-0", [30'-0"]		9'-6"	
19-3-100			30'-0"		7 11/16"		10'-0"	9 1/8"	7 11/16"					6'-15' [12'-0"]			11'-0"	
19A-3-100			35'-0"		6 15/16"		15'-0"		6 15/16"					6'-15' [15'-0"]				
23-3-100			17'-0"		9 9/16"		NONE							NONE	35'-0"			
24-3-100			30'-0"		7 11/16"		10'-0"	9 1/8"	7 11/16"					6'-15' [12'-0"]				
24A-3-100			35'-0"		6 15/16"		15'-0"		6 15/16"					6'-15' [15'-0"]				
26-3-100			30'-0"	1'-2"	7 13/16"	0.3125"	10'-0"	9 1/4"	7 13/16"	1'-11"	1'-9"		2 1/2" ø x 42"	6'-15' [12'-0"]	40'-0", [45'-0"]	3'-6"	12'-0"	
26A-3-100			35'-0"		7 1/16"		15'-0"		7 1/16"					6'-15' [15'-0"]				
27-3-100			17'-0"		9 11/16"		NONE							NONE				

[ ] INDICATES MAST ARM LENGTH TO BE USED UNLESS OTHERWISE NOTED ON PLANS.

STATE OF CALIFORNIA
DEPARTMENT OF TRANSPORTATION

ELECTRICAL SYSTEMS (SIGNAL AND LIGHTING STANDARD, CASE 3 SIGNAL MAST ARM LOADING, WIND VELOCITY=100 MPH AND SIGNAL MAST ARM LENGTHS 15' TO 45')

NO SCALE

RSP ES-7E DATED OCTOBER 30, 2015 SUPERSEDES RSP ES-7E DATED JULY 19, 2013 AND ES-7E DATED MAY 20, 2011 - PAGE 466 OF THE STANDARD PLANS BOOK DATED 2010.

REVISED STANDARD PLAN RSP ES-7E

2010 REVISED STANDARD PLAN RSP ES-7E

8-24-15

Dist	COUNTY	ROUTE	POST MILES TOTAL PROJECT	SHEET No.	TOTAL SHEETS
12	Ora	91	R1.0, 5.4	111	134

REGISTERED CIVIL ENGINEER

October 30, 2015
PLANS APPROVAL DATE

REGISTERED PROFESSIONAL ENGINEER Stanley P. Johnson No. C57793 Exp. 3-31-16 CIVIL STATE OF CALIFORNIA

THE STATE OF CALIFORNIA OR ITS OFFICERS OR AGENTS SHALL NOT BE RESPONSIBLE FOR THE ACCURACY OR COMPLETENESS OF SCANNED COPIES OF THIS PLAN SHEET.

TO ACCOMPANY PLANS DATED 02-29-16

NOTE:
Handhole shall be located on the downstream side of traffic.

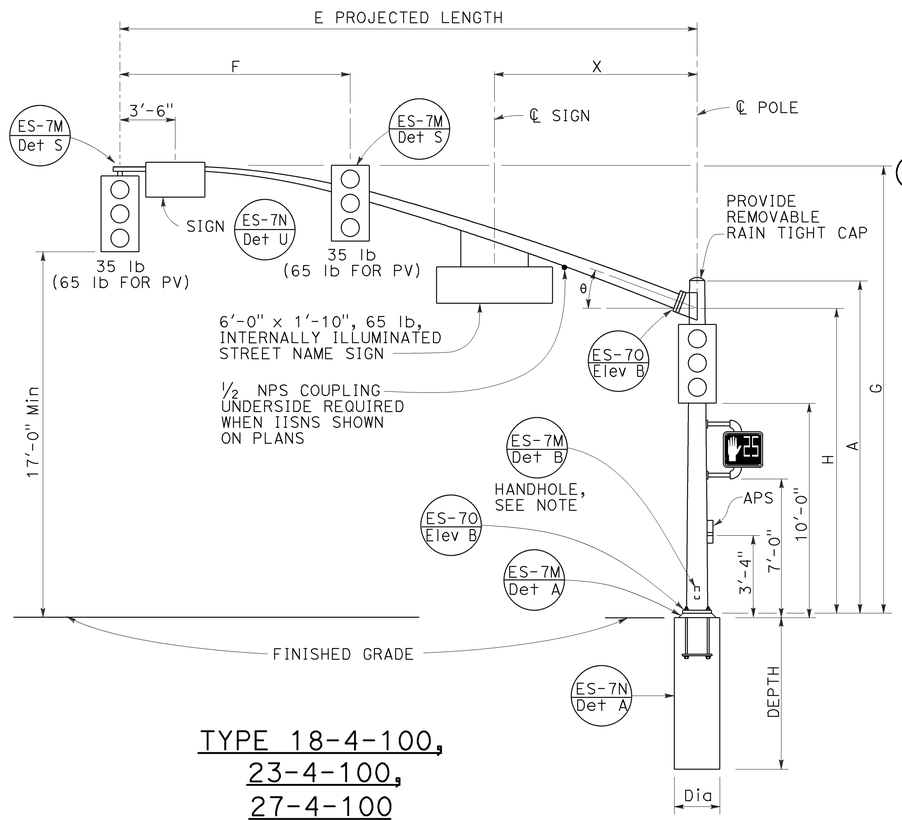

TYPE 18-4-100,
23-4-100,
27-4-100
ELEVATION A

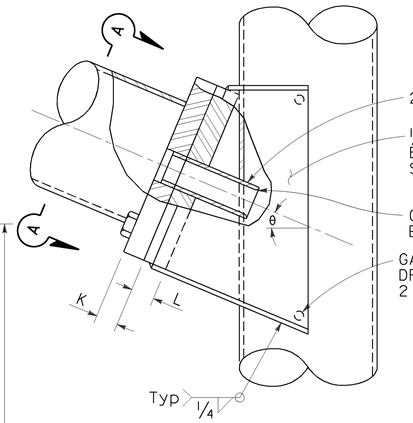

ELEVATION C

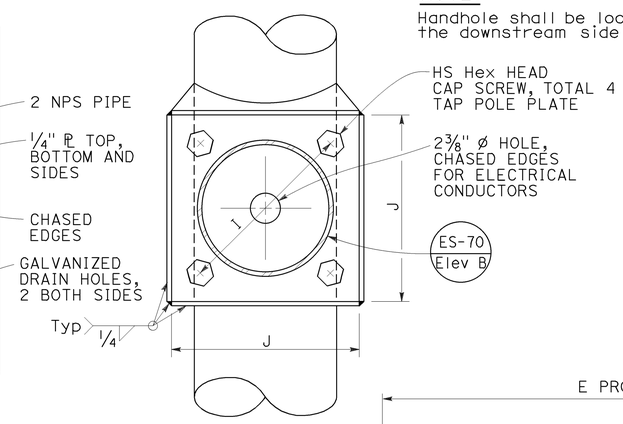

VIEW A-A

SIGNAL MAST ARM CONNECTION
DETAIL A

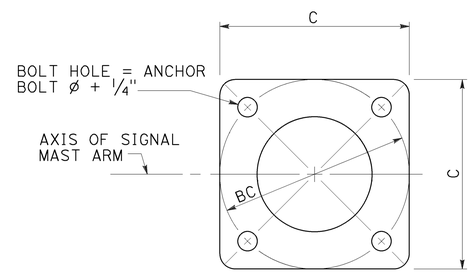

BASE PLATE
DETAIL B

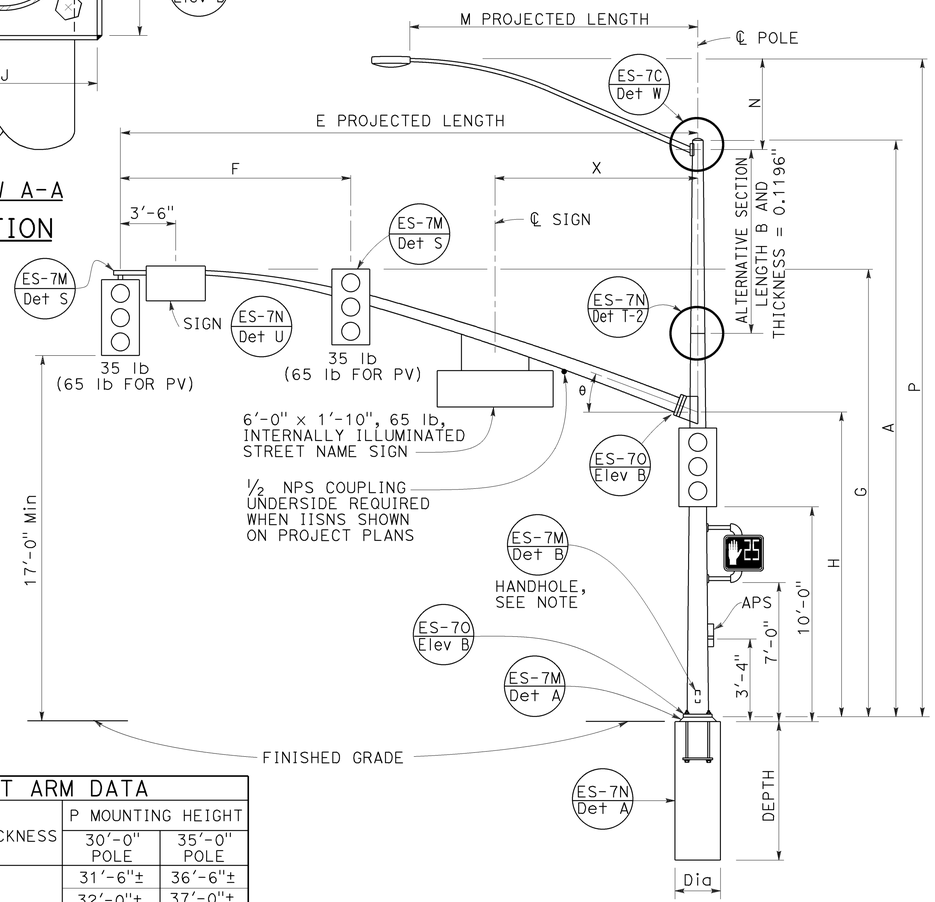

TYPE 19-4-100, 19A-4-100,
24-4-100, 24A-4-100,
26-4-100, 26A-4-100
ELEVATION B

SIGNAL MAST ARM DATA

E PROJECTED LENGTH	F Min SPACING	G MOUNTING HEIGHT	H	Min OD AT POLE	THICKNESS	I BOLT CIRCLE	HS CAP SCREWS	J PLATE SIZE	K MAST ARM PL THICKNESS	L POLE PL THICKNESS	θ	X Max
25'-0"	10'-0"	22'-8"±	16'-0"	7⅜"	0.2391"	12"	1¼"-7NC-3"	1'-0"	1¼"	1½"	23°	10'-6"
30'-0"	12'-0"	23'-0"±		8"								
35'-0"	14'-0"			8 11/16"		13½"		1'-1½"	1½"	1¾"	21°	
40'-0"	15'-0"			9⅜"							15°	13'-0"
45'-0"		23'-8"±		10¼"								

LUMINAIRE MAST ARM DATA

M PROJECTED LENGTH	N RISE	Min OD AT POLE	THICKNESS	P MOUNTING HEIGHT 30'-0" POLE	P MOUNTING HEIGHT 35'-0" POLE
6'-0"	2'-0"±	3¼"	0.1196"	31'-6"±	36'-6"±
8'-0"	2'-6"±	3½"		32'-0"±	37'-0"±
10'-0"	3'-3"±	3⅞"		32'-9"±	37'-9"±
12'-0"	4'-3"±			33'-9"±	38'-9"±
15'-0"	4'-9"±	4¼"		34'-3"±	39'-3"±

POLE DATA / BASE PLATE DATA / CIDH PILE FOUNDATION

POLE TYPE	LOAD CASE	WIND VELOCITY (mph)	A HEIGHT	Min OD BASE	Min OD TOP	THICKNESS	ALTERNATIVE SECTION B LENGTH	ALTERNATIVE SECTION BOTTOM	ALTERNATIVE SECTION TOP	C	BC = BOLT CIRCLE	THICKNESS	ANCHOR BOLT SIZE	LUMINAIRE MAST ARM	SIGNAL MAST ARM	CIDH Dia	CIDH DEPTH	CIDH REINFORCED
18-4-100	4	100	17'-0"	12⅛"	9 9/16"	0.3125"	NONE	9⅛"	7 11/16"	1'-7"	1'-5½"	3"	2" Ø x 42"	NONE	25'-0", 30'-0"	3'-0"	11'-0"	YES
19-4-100			30'-0"		7 11/16"		10'-0"							6'-15' 12'-0"				
19A-4-100			35'-0"		6 15/16"		15'-0'		6 15/16"					6'-15' 15'-0"				
23-4-100			17'-0"		9 9/16"		NONE							NONE	35'-0"			
24-4-100			30'-0"		7 11/16"		10'-0"	9⅛"	7 11/16"					6'-15' 12'-0"				
24A-4-100			35'-0"		6 15/16"		15'-0"		6 15/16"					6'-15' 15'-0"				
26-4-100			30'-0"	14"	8 3/16"		10'-0"	9⅝"	8 3/16"	23"	21"		2½" Ø x 42"	6'-15' 12'-0"	40'-0", 45'-0"	3'-6"	12'-0"	
26A-4-100			35'-0"		7 7/16"		15'-0"		7 7/16"					6'-15' 15'-0"				
27-4-100			17'-0"		10 1/16"		NONE							NONE				

☐ INDICATES MAST ARM LENGTH TO BE USED UNLESS OTHERWISE NOTED ON PLANS.

STATE OF CALIFORNIA
DEPARTMENT OF TRANSPORTATION

ELECTRICAL SYSTEMS (SIGNAL AND LIGHTING STANDARD, CASE 4 SIGNAL MAST ARM LOADING, WIND VELOCITY=100 MPH AND SIGNAL MAST ARM LENGTHS 25' TO 45')

NO SCALE

RSP ES-7F DATED OCTOBER 30, 2015 SUPERSEDES RSP ES-7F DATED JULY 19, 2013 AND ES-7F DATED MAY 20, 2011 - PAGE 467 OF THE STANDARD PLANS BOOK DATED 2010.

REVISED STANDARD PLAN RSP ES-7F

2010 REVISED STANDARD PLAN RSP ES-7F

8-24-15

Dist	COUNTY	ROUTE	POST MILES TOTAL PROJECT	SHEET No.	TOTAL SHEETS
12	Ora	91	R1.0, 5.4	112	134

REGISTERED CIVIL ENGINEER

October 30, 2015
PLANS APPROVAL DATE

REGISTERED PROFESSIONAL ENGINEER Stanley P. Johnson No. C57793 Exp. 3-31-16 CIVIL STATE OF CALIFORNIA

THE STATE OF CALIFORNIA OR ITS OFFICERS OR AGENTS SHALL NOT BE RESPONSIBLE FOR THE ACCURACY OR COMPLETENESS OF SCANNED COPIES OF THIS PLAN SHEET.

TO ACCOMPANY PLANS DATED 02-29-16

NOTE:
Handhole shall be located on the downstream side of traffic.

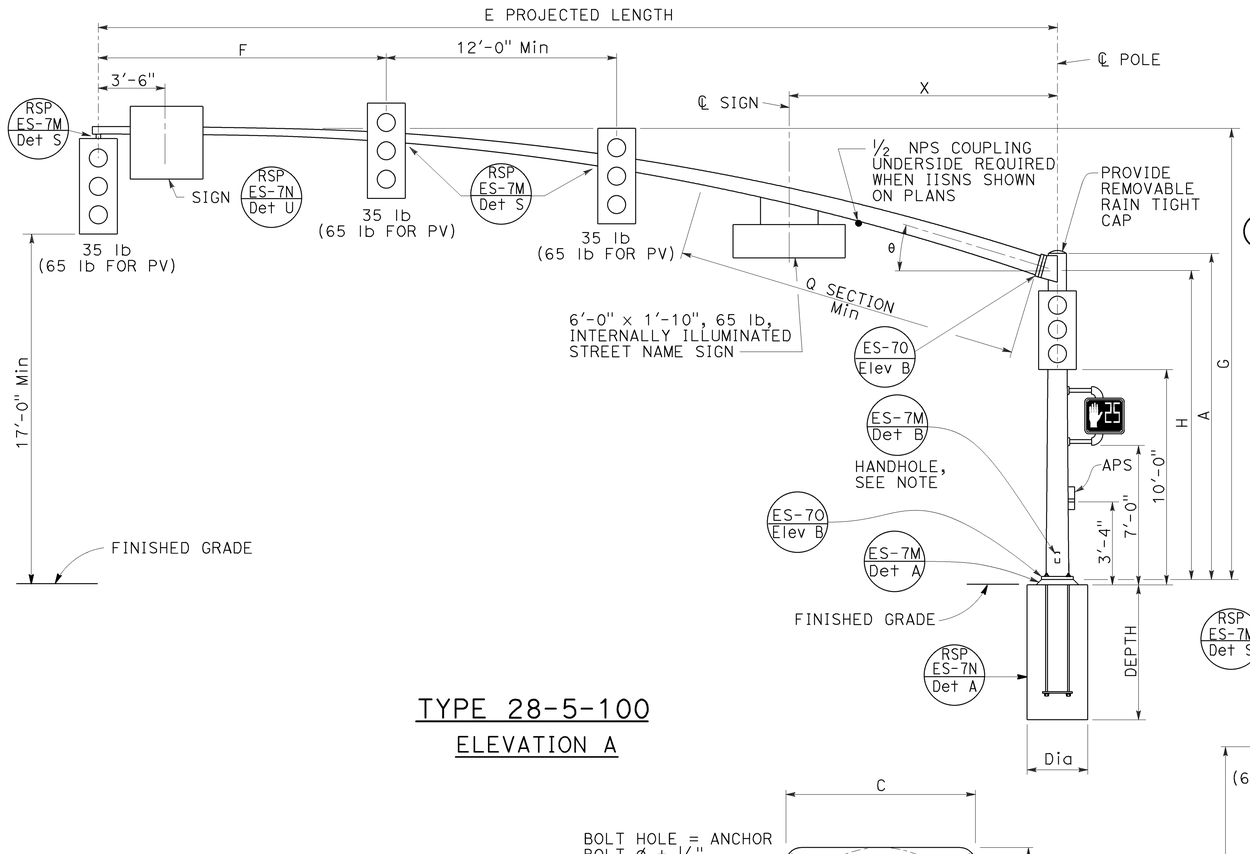

TYPE 28-5-100
ELEVATION A

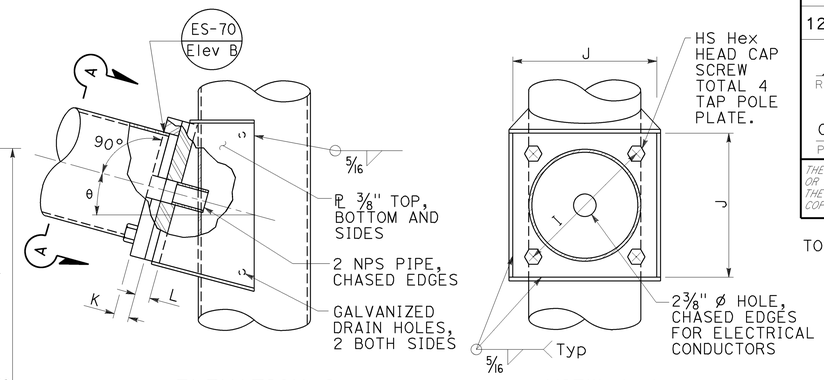

ELEVATION C

VIEW A-A

SIGNAL MAST ARM CONNECTION
DETAIL A

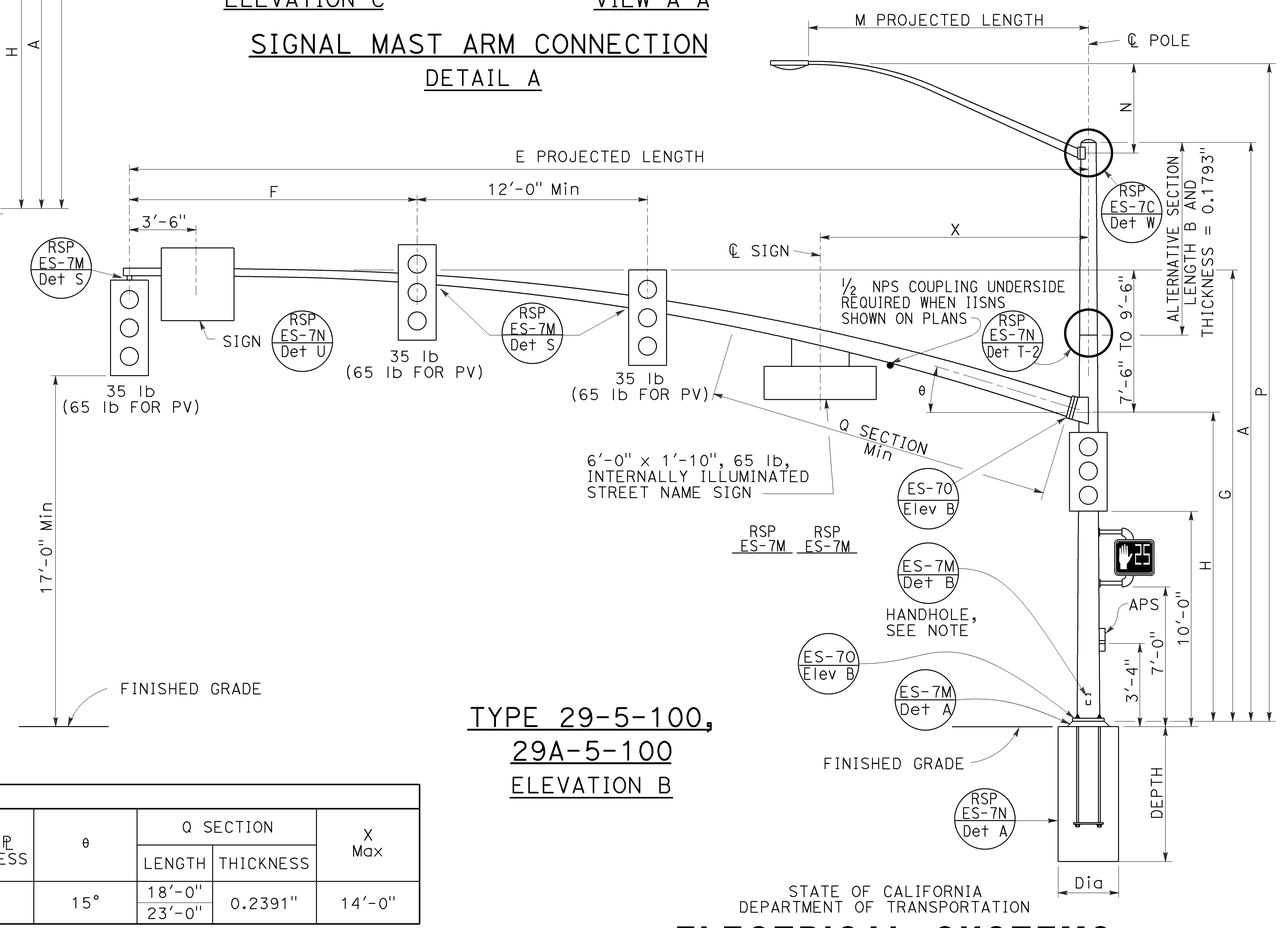

TYPE 29-5-100,
29A-5-100
ELEVATION B

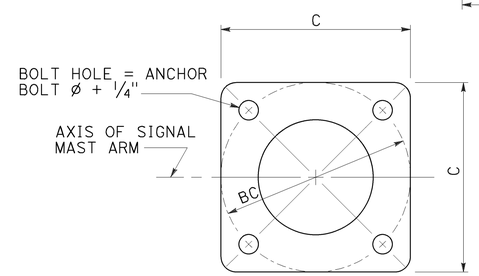

BASE PLATE
DETAIL B

LUMINAIRE MAST ARM DATA					
M PROJECTED LENGTH	N RISE	Min OD AT POLE	THICKNESS	P MOUNTING HEIGHT 30'-0" POLE	P MOUNTING HEIGHT 35'-0" POLE
6'-0"	2'-0"±	3 1/4"	0.1196"	31'-6"±	36'-6"±
8'-0"	2'-6"±	3 1/2"		32'-0"±	37'-0"±
10'-0"	3'-3"±	3 7/8"		32'-9"±	37'-9"±
12'-0"	4'-3"±			33'-9"±	38'-9"±
15'-0"	4'-9"±	4 1/4"		34'-3"±	39'-3"±

SIGNAL MAST ARM DATA														
E PROJECTED LENGTH	F Min SPACING	G MOUNTING HEIGHT	H	Min OD AT POLE	THICKNESS	I BOLT CIRCLE	HS CAP SCREWS	J PLATE SIZE	K MAST ARM ℄ THICKNESS	L POLE ℄ THICKNESS	θ	Q SECTION LENGTH	Q SECTION THICKNESS	X Max
50'-0"	15'-0"	23'-7"± TO 25'-7"±	16'-0"	11 7/16"	0.1793"	16"	1 1/2"-6NC-3 1/4"	1'-4"	1 3/4"	1 3/4"	15°	18'-0"	0.2391"	14'-0"
55'-0"				1'-1/4"								23'-0"		

POLE TYPE	LOAD CASE	WIND VELOCITY (mph)	POLE DATA A HEIGHT	Min OD BASE	Min OD TOP	THICKNESS	ALTERNATIVE SECTION B LENGTH	ALTERNATIVE SECTION BOTTOM	ALTERNATIVE SECTION TOP	BASE PLATE DATA C	BC = BOLT CIRCLE	THICKNESS	ANCHOR BOLT SIZE	LUMINAIRE MAST ARM	SIGNAL MAST ARM	CIDH PILE FOUNDATION Dia	DEPTH	REINFORCED
28-5-100	5	100	17'-0"	14"	11 9/16"	0.3125"	NONE	11 1/8"	9 11/16"	23"	21"	3"	2 1/2" ø x 42"	NONE	50'-0", 55'-0"	3'-6"	12'-0"	YES
29-5-100			30'-0"		9 11/16"		10'-0"							6'-15' 15'-0"				
29A-5-100			35'-0"		8 15/16"		15'-0"		8 15/16"									

INDICATES MAST ARM LENGTH TO BE USED UNLESS OTHERWISE NOTED ON PLANS.

STATE OF CALIFORNIA
DEPARTMENT OF TRANSPORTATION

ELECTRICAL SYSTEMS (SIGNAL AND LIGHTING STANDARD, CASE 5 SIGNAL MAST ARM LOADING, WIND VELOCITY=100 MPH AND SIGNAL MAST ARM LENGTHS 50' TO 55')

NO SCALE

RSP ES-7G DATED OCTOBER 30, 2015 SUPERSEDES RSP ES-7G DATED JULY 19, 2013 AND ES-7G DATED MAY 20, 2011 - PAGE 468 OF THE STANDARD PLANS BOOK DATED 2010.

REVISED STANDARD PLAN RSP ES-7G

2010 REVISED STANDARD PLAN RSP ES-7G

8-24-15

Dist	COUNTY	ROUTE	POST MILES TOTAL PROJECT	SHEET No.	TOTAL SHEETS
12	Ora	91	R1.0, 5.4	113	134

REGISTERED CIVIL ENGINEER

October 30, 2015
PLANS APPROVAL DATE

Stanley P. Johnson No. C57793 Exp. 3-31-16 CIVIL — REGISTERED PROFESSIONAL ENGINEER — STATE OF CALIFORNIA

THE STATE OF CALIFORNIA OR ITS OFFICERS OR AGENTS SHALL NOT BE RESPONSIBLE FOR THE ACCURACY OR COMPLETENESS OF SCANNED COPIES OF THIS PLAN SHEET.

TO ACCOMPANY PLANS DATED 02-29-16

2010 REVISED STANDARD PLAN RSP ES-7H

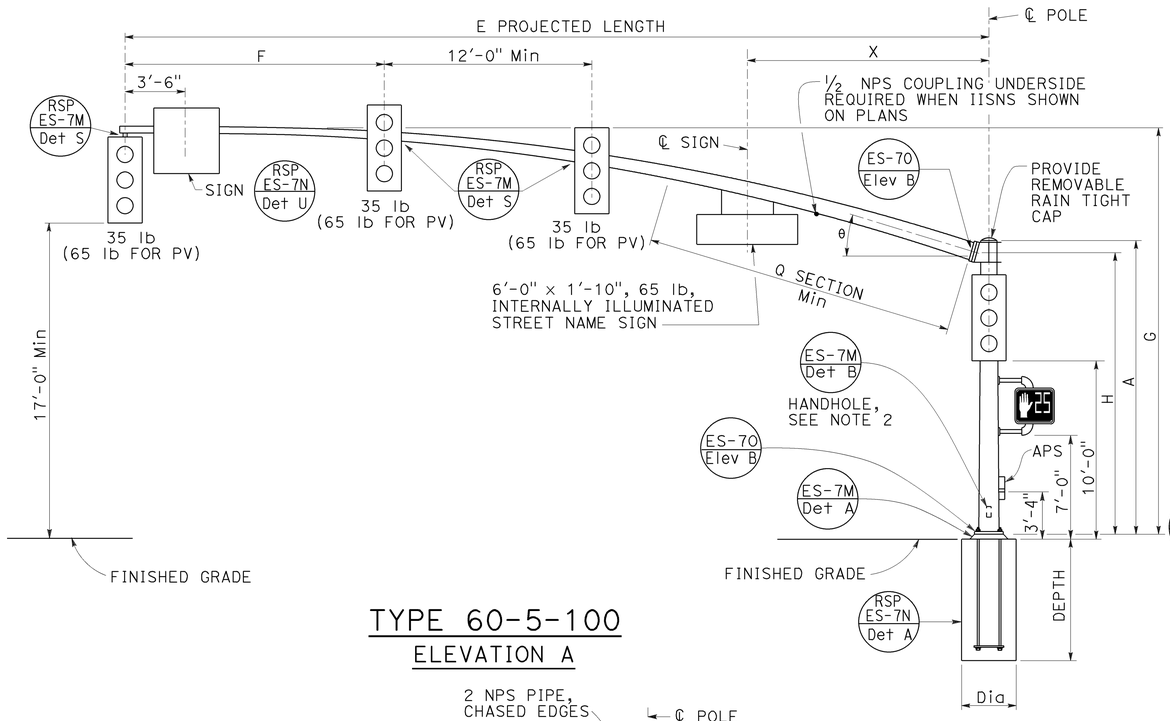

TYPE 60-5-100
ELEVATION A

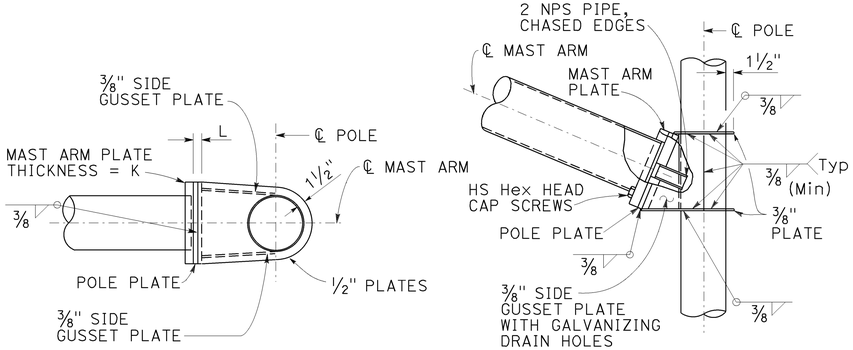

SIGNAL MAST ARM CONNECTION
DETAIL A

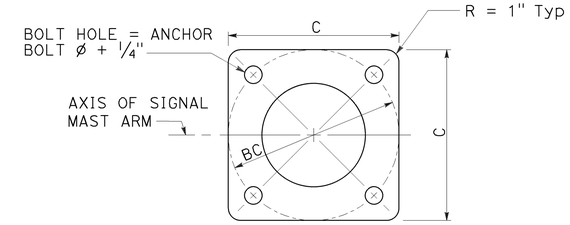

BASE PLATE
DETAIL B

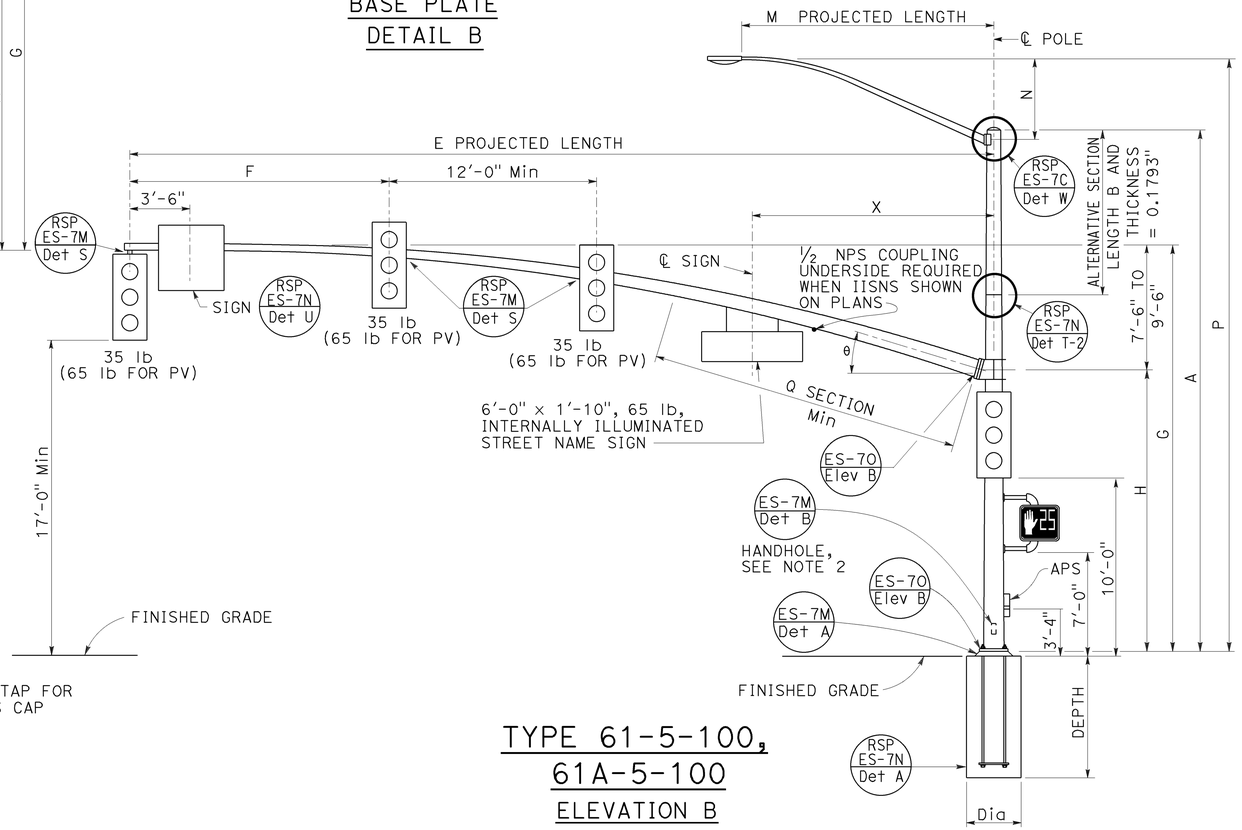

TYPE 61-5-100, 61A-5-100
ELEVATION B

SIGNAL MAST ARM DATA														
E PROJECTED LENGTH	F Min SPACING	G MOUNTING HEIGHT	H	Min OD AT POLE	THICKNESS	I BOLT CIRCLE	HS CAP SCREWS	J PLATE SIZE	K MAST ARM ℄ THICKNESS	L POLE ℄ THICKNESS	θ	Q SECTION LENGTH	Q SECTION THICKNESS	X Max
60'-0"	15'-0"	23'-7" TO 25'-7"	16'-0"	1'-1½"	0.1793"	20"	1½"-6NC-4"	1'-8"	2"	2"	15°	24'-0"	0.2391"	14'-0"
65'-0"					0.2391"							29'-0"	0.3125"	

LUMINAIRE MAST ARM DATA					
M PROJECTED LENGTH	N RISE	Min OD AT POLE	THICKNESS	P MOUNTING HEIGHT 30'-0" POLE	P MOUNTING HEIGHT 35'-0" POLE
6'-0"	2'-0"±	3¼"	0.1196"	31'-6"±	36'-6"±
8'-0"	2'-6"±	3½"		32'-0"±	37'-0"±
10'-0"	3'-3"±	3⅞"		32'-9"±	37'-9"±
12'-0"	4'-3"±			33'-9"±	38'-9"±
15'-0"	4'-9"±	4¼"		34'-3"±	39'-3"±

NOTES:

1. The radial separation between the face of the pole and the adjacent insides of the top and bottom gusset plates shall not exceed 3/16". Fillet weld size to be increased by amount of gap.
2. Handhole shall be located on the downstream side of traffic.

POLE TYPE	LOAD CASE	WIND VELOCITY (mph)	POLE DATA A HEIGHT	POLE DATA Min OD BASE	POLE DATA Min OD TOP	POLE DATA THICKNESS	BASE PLATE DATA C	BASE PLATE DATA BC = BOLT CIRCLE	BASE PLATE DATA THICKNESS	BASE PLATE DATA ANCHOR BOLT SIZE	LUMINAIRE MAST ARM	SIGNAL MAST ARM	CIDH PILE FOUNDATION DIAMETER	CIDH PILE FOUNDATION DEPTH	CIDH PILE FOUNDATION REINFORCED
60-5-100	5	100	17'-0"	16"	1'-1 9/16"	0.3125"	2'-0"	1'-11"	3"	2½" ø x 60"	NONE	60'-0", 65'-0"	3'-6"	13'-0"	YES
61-5-100			30'-0"		11 11/16"						6'-15' 15'-0"				
61A-5-100			35'-0"		10 15/16"										

INDICATES MAST ARM LENGTH TO BE USED UNLESS OTHERWISE NOTED ON PLANS.

STATE OF CALIFORNIA
DEPARTMENT OF TRANSPORTATION

ELECTRICAL SYSTEMS (SIGNAL AND LIGHTING STANDARD, CASE 5 SIGNAL MAST ARM LOADING, WIND VELOCITY=100 MPH AND SIGNAL MAST ARM LENGTHS 60' TO 65')

NO SCALE

RSP ES-7H DATED OCTOBER 30, 2015 SUPERSEDES RSP ES-7H DATED JULY 19, 2013 AND ES-7H DATED MAY 20, 2011 - PAGE 469 OF THE STANDARD PLANS BOOK DATED 2010.

REVISED STANDARD PLAN RSP ES-7H

8-24-15

Dist	COUNTY	ROUTE	POST MILES TOTAL PROJECT	SHEET No.	TOTAL SHEETS
12	Ora	91	R1.0, 5.4	114	134

REGISTERED CIVIL ENGINEER

October 30, 2015
PLANS APPROVAL DATE

REGISTERED PROFESSIONAL ENGINEER
Stanley P. Johnson
No. C57793
Exp. 3-31-16
CIVIL
STATE OF CALIFORNIA

THE STATE OF CALIFORNIA OR ITS OFFICERS OR AGENTS SHALL NOT BE RESPONSIBLE FOR THE ACCURACY OR COMPLETENESS OF SCANNED COPIES OF THIS PLAN SHEET.

TO ACCOMPANY PLANS DATED 02-29-16

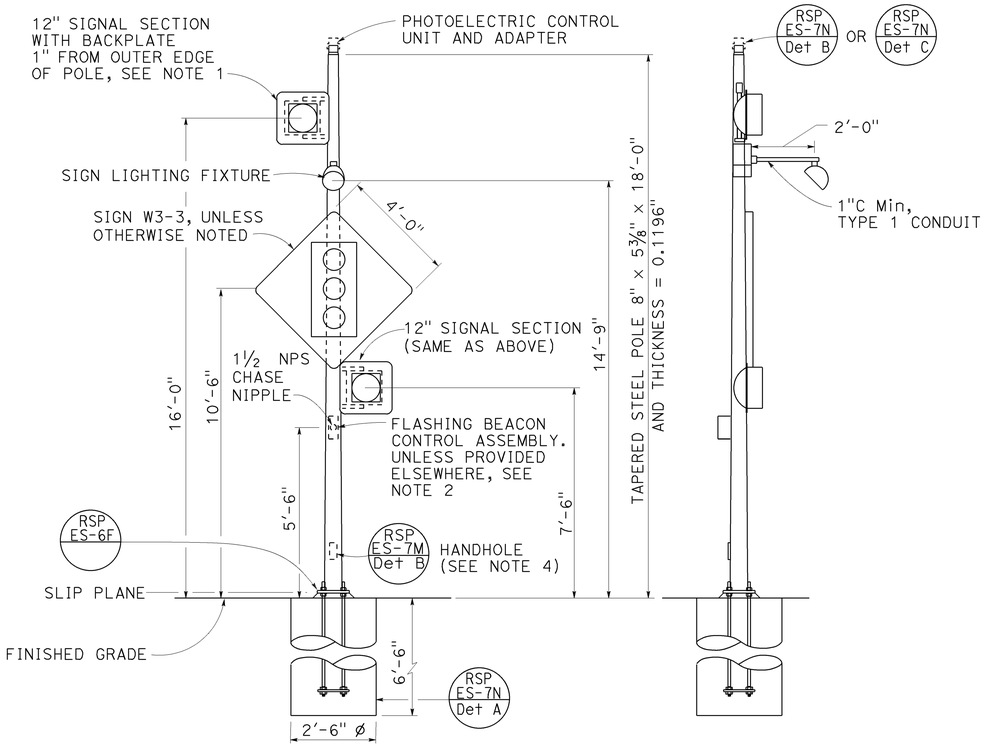

FRONT VIEW

SIDE VIEW

TYPE 15-FBS
ADVANCE FLASHING BEACON WITH SLIP BASE INSTALLATION
DETAIL A

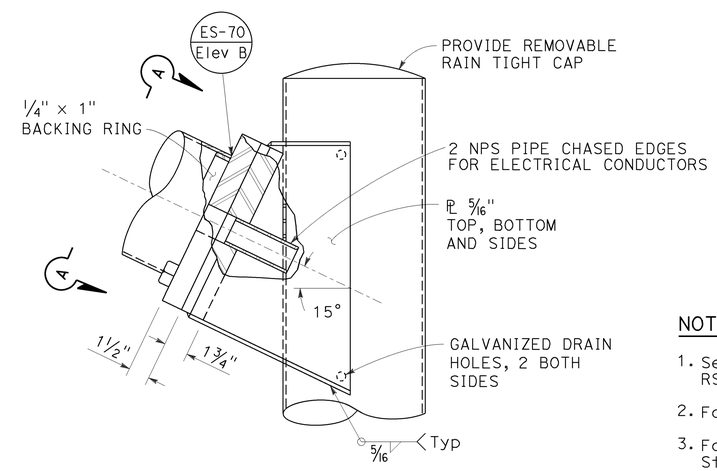

ELEVATION B

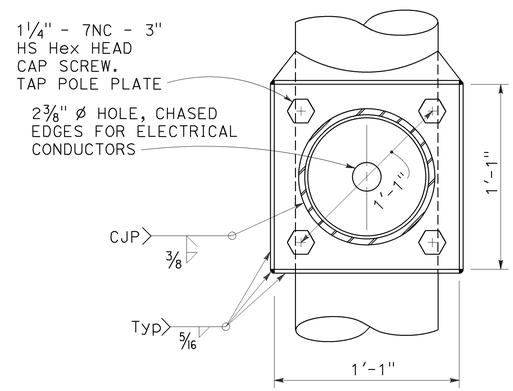

VIEW A-A

FLASHING BEACON MAST ARM CONNECTION DETAIL
DETAIL B

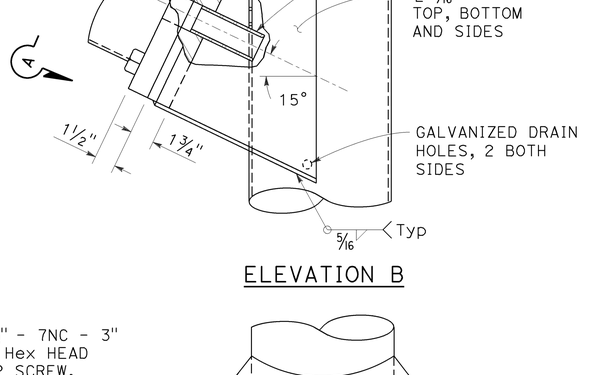

BASE PLATE

DETAIL C

NOTES:

1. See Revised Standard Plans RSP ES-4A and RSP ES-4D for attachment fitting details.
2. For wiring diagram, see Standard Plan ES-14B.
3. For additional notes and details, see Revised Standard Plans RSP ES-7M and RSP ES-7N.
4. Handhole shall be located on the downstream side of traffic.
5. See project plans for type of standard to be installed.

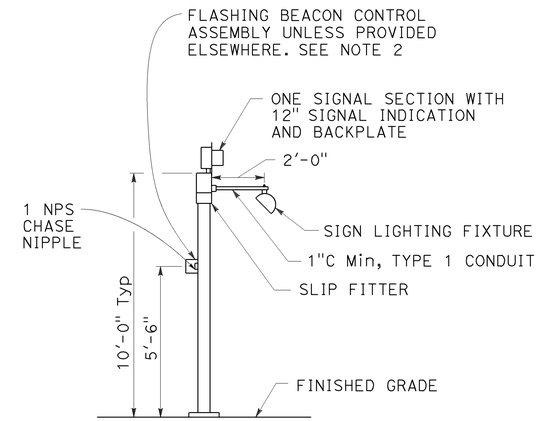

TYPE 1-A, 1-B, 1-C, AND 1-D
ADVANCE FLASHING BEACON INSTALLATION
DETAIL D
See Note 5

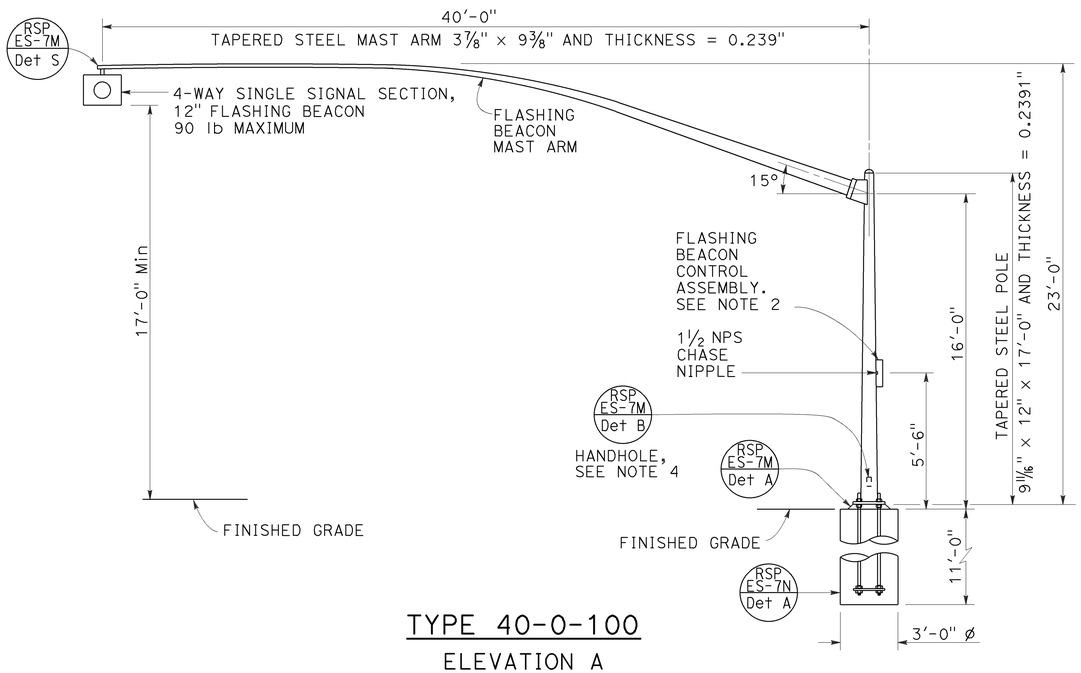

TYPE 40-0-100
ELEVATION A

STATE OF CALIFORNIA
DEPARTMENT OF TRANSPORTATION

ELECTRICAL SYSTEMS (FLASHING BEACON ON A TYPE 1, TYPE 15-FBS, AND TYPE 40 STANDARD)

NO SCALE

RSP ES-7J DATED OCTOBER 30, 2015 SUPERSEDES RSP ES-7J DATED JULY 19, 2013 AND STANDARD PLAN ES-7J DATED MAY 20, 2011 - PAGE 471 OF THE STANDARD PLANS BOOK DATED 2010.

REVISED STANDARD PLAN RSP ES-7J

2010 REVISED STANDARD PLAN RSP ES-7J

9-1-15

Dist	COUNTY	ROUTE	POST MILES TOTAL PROJECT	SHEET No.	TOTAL SHEETS
12	Ora	91	R1.0, 5.4	115	134

REGISTERED CIVIL ENGINEER

October 30, 2015
PLANS APPROVAL DATE

REGISTERED PROFESSIONAL ENGINEER Stanley P. Johnson No. C57793 Exp. 3-31-16 CIVIL STATE OF CALIFORNIA

THE STATE OF CALIFORNIA OR ITS OFFICERS OR AGENTS SHALL NOT BE RESPONSIBLE FOR THE ACCURACY OR COMPLETENESS OF SCANNED COPIES OF THIS PLAN SHEET.

TO ACCOMPANY PLANS DATED 02-29-16

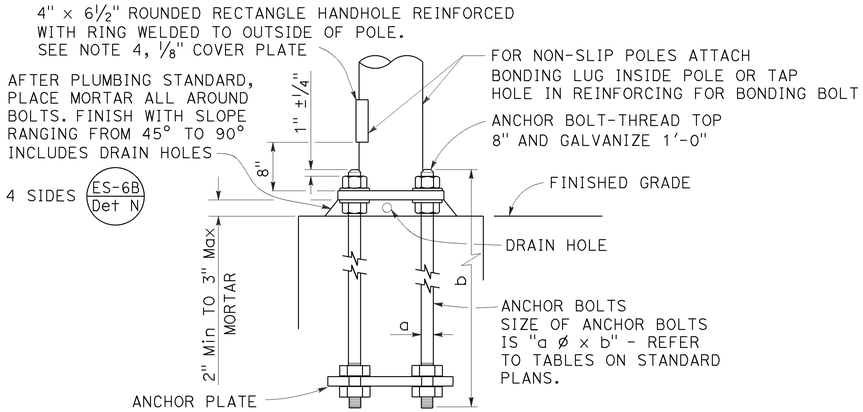

HANDHOLE AND ANCHORAGE
DETAIL A

IDENTIFICATION NUMBER

1. Attach a stamped metal tag with pole's identification number above the handhole. ¼" high number, minimum.
2. Attach a stamped metal tag with mast arm's identification number to the bottom of the signal mast arm near the pole plate. ¼" high number, minimum.

Type — Load case (Use SL for special load case) — Design wind velocity (mph) — Signal mast arm length (ft) { Near handhole: Maximum signal mast arm length for pole type; Near pole plate: Installed signal mast arm length } — Standard plan year — Only for poles or mast arms using Detail F — Only for poles or mast arms using ES-7D

26A - 3 - 100 - 45 - 10 - F or FB

SAMPLE IDENTIFICATION NUMBER

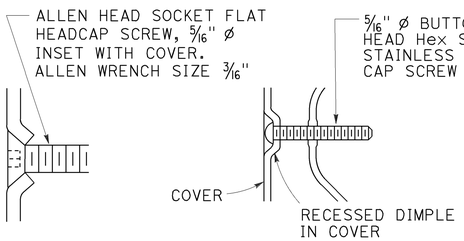

TYPICAL DETAIL
DETAIL B-1

ALTERNATIVE DETAIL
DETAIL B-2

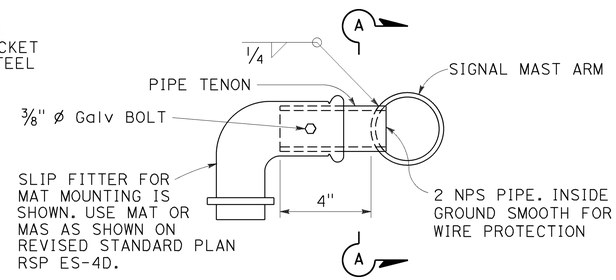

SIDE TENON
DETAIL S-1

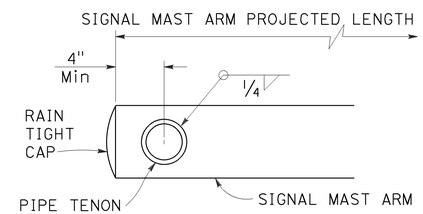

SECTION A-A

PIPE TENONS
DETAIL S

NOTES:

1. Provide a Hex nut, leveling nut and 2 washers for each bolt.
2. Luminaire mast arms shall be round, tapered steel tubes, taper of 0.1375" to 0.143-inch per foot with an end section 2⅜" OD for mounting hardware. Extensions of 2 NPS Standard pipe and 7" long may be used at the option of the manufacturer. When low pressure sodium luminaires are required, the extension shall be 1'-3".
3. Signal mast arms shall be round, tapered steel tubes, maximum taper 0.143-inch per foot.
4. Handhole reinforcement ring shall be ¼" x 2" for 0.1196" to 0.2391" thick poles, ⅜" x 2" for 0.3125" thick poles.
5. Handholes shall be located on the downstream side of traffic.
6. Detail F, fatigue resistant weld, is required at socket welded signal mast arm plate and pole base plate.
7. Cap screws shall be tightened by the turn-of-nut method ⅓ turn from a snug tight condition. No washer will be required.
8. Outside diameter, wall thickness, and corresponding section properties of poles and mast arms as shown in the Standard Plans are minimums. Unless otherwise specified, alternative sections shall require approval by the Engineer.
9. Wind Loading (3 seconds gust): 100 mph
10. Unit Stresses (Structural steel):
    fy = 55,000 psi (tapered steel tube and anchor bolts)
    fy = 50,000 psi (unless otherwise noted)
11. Unit Stresses (Reinforced concrete):
    f'c = 3,625 psi
    fy = 60,000 psi

WELD SIZE	WALL THICKNESS
3/16"	0.1196"
¼"	0.1793"
5/16"	0.2391"
⅜"	0.3125"

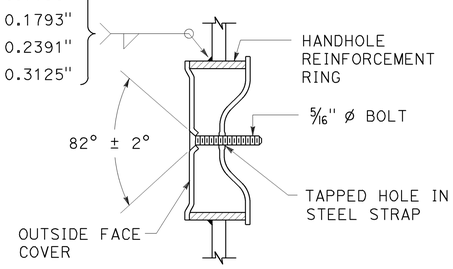

TAMPER RESISTANT HANDHOLE COVER
DETAIL B

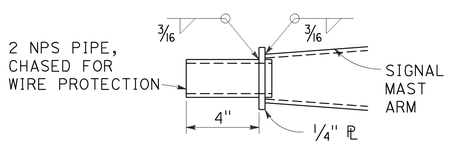

TIP TENON
DETAIL TL

This detail supersedes Detail S when so designated

WELD SIZE	WALL THICKNESS
⅛"	0.1196"
3/16"	0.1793"
¼"	0.2391"

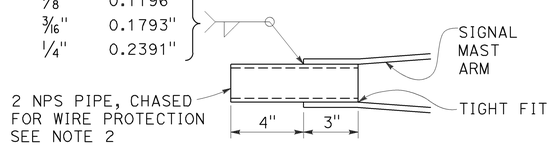

TIP TENON
DETAIL TS

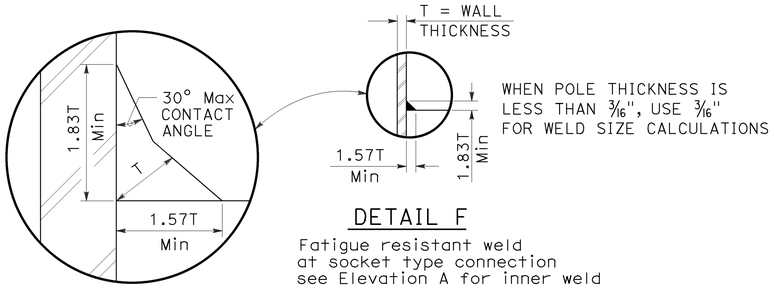

DETAIL F

Fatigue resistant weld at socket type connection see Elevation A for inner weld

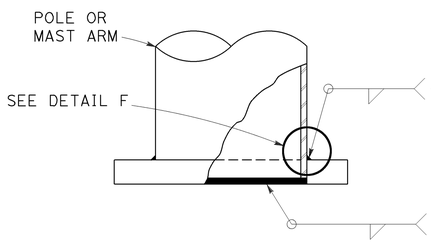

WELD SIZE	WALL THICKNESS
¼"	0.1196"
5/16"	0.1793"
⅜"	0.2391"
7/16"	0.3125"

⅛"	0.1196"
3/16"	0.1793"
¼"	0.2391"
5/16"	0.3125"

ELEVATION A

STATE OF CALIFORNIA
DEPARTMENT OF TRANSPORTATION

ELECTRICAL SYSTEMS (SIGNAL AND LIGHTING STANDARD, DETAIL No. 1)

NO SCALE

RSP ES-7M DATED OCTOBER 30, 2015 SUPERSEDES STANDARD PLAN ES-7M DATED MAY 20, 2011 - PAGE 474 OF THE STANDARD PLANS BOOK DATED 2010.

REVISED STANDARD PLAN RSP ES-7M

2010 REVISED STANDARD PLAN RSP ES-7M

9-1-15

Dist	COUNTY	ROUTE	POST MILES TOTAL PROJECT	SHEET No.	TOTAL SHEETS
12	Ora	91	R1.0, 5.4	116	134

REGISTERED CIVIL ENGINEER

October 30, 2015
PLANS APPROVAL DATE

REGISTERED PROFESSIONAL ENGINEER Stanley P. Johnson No. C57793 Exp. 3-31-16 CIVIL STATE OF CALIFORNIA

THE STATE OF CALIFORNIA OR ITS OFFICERS OR AGENTS SHALL NOT BE RESPONSIBLE FOR THE ACCURACY OR COMPLETENESS OF SCANNED COPIES OF THIS PLAN SHEET.

TO ACCOMPANY PLANS DATED 02-29-16

2010 REVISED STANDARD PLAN RSP ES-7N

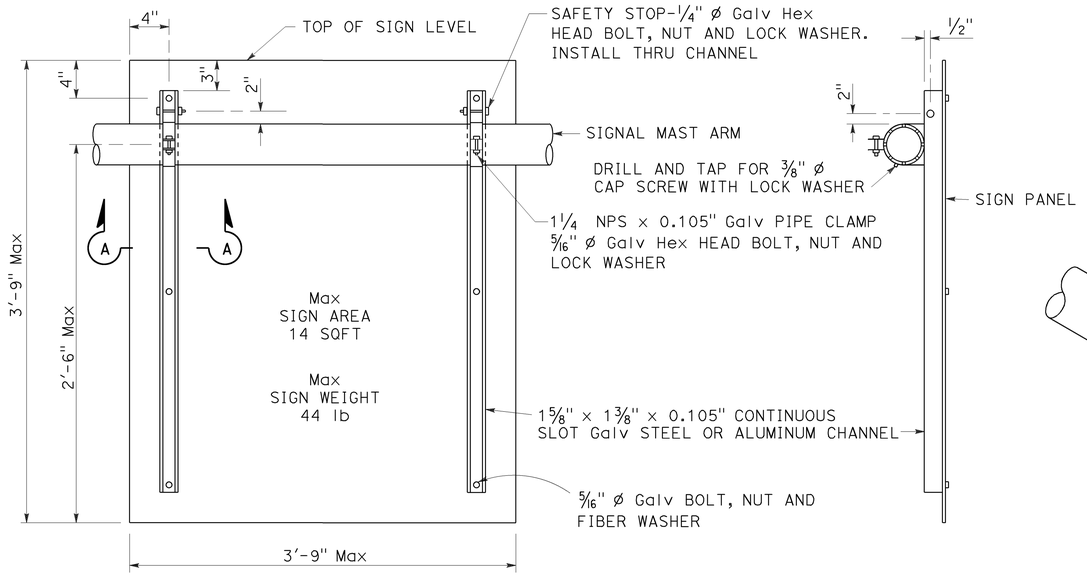

REAR VIEW

SIDE VIEW

SIGN MOUNTING DETAILS
DETAIL U

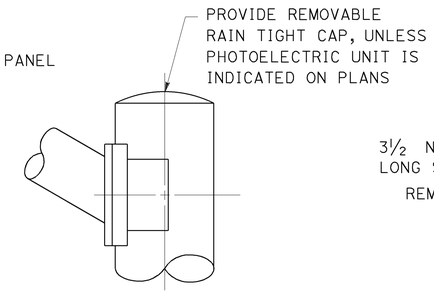

STANDARD TOP
DETAIL B-1

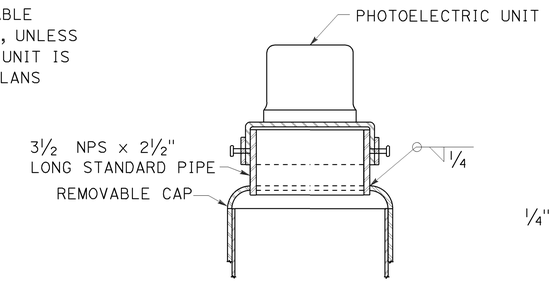

MOUNTING ADAPTER FOR
PHOTOELECTRIC UNIT
DETAIL B-2

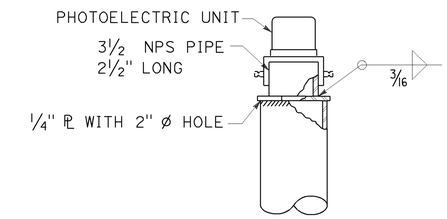

ALTERNATIVE
MOUNTING ADAPTER
DETAIL B-3

POLE TOP DETAILS
DETAIL B

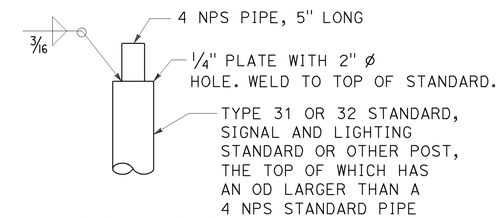

DETAIL C-1

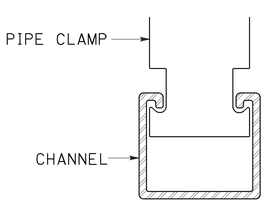

SECTION A-A

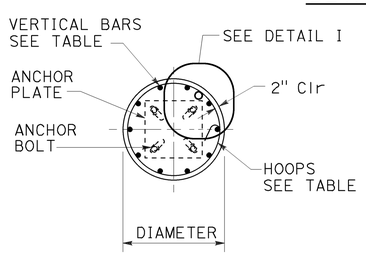

SECTION B-B

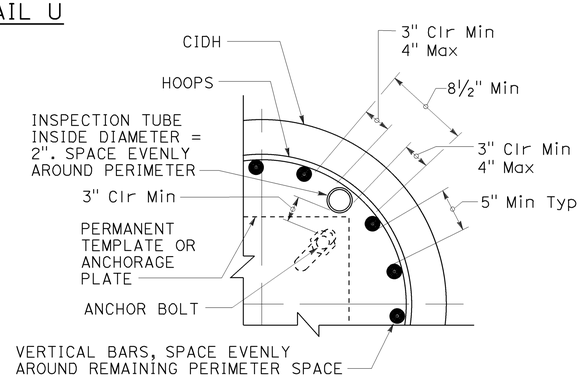

INSPECTION TUBE PLACEMENT
DETAIL I

CIDH REINFORCING AND INSPECTION TUBE SCHEDULE			
CIDH DIAMETER	VERTICAL BARS	HOOPS (WELDED)	INSPECTION TUBE
2 ft	8-#5	#4 AT 6	2
2.5 ft	10-#6		4*
3 ft	12-#7	#5 AT 6	
3.5 ft	14-#8		4
4 ft	18-#9	2-#4 AT 7	5
5 ft	22-#10	2-#5 AT 7	6
6 ft	26-#11	2-#6 AT 7	7

* FOR SLIP BASE VERSIONS WITH 3 ANCHOR BOLTS USE 3 INSPECTION TUBES.

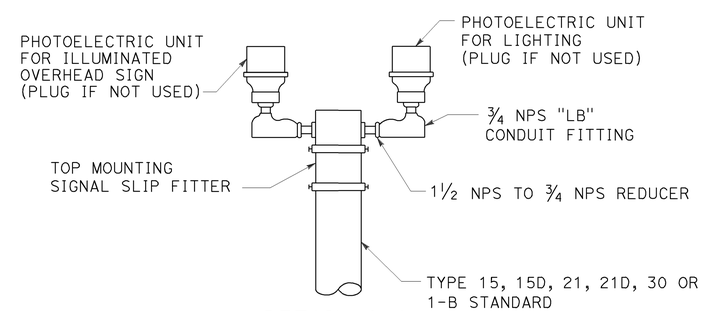

DETAIL C-2

DUAL PHOTOELECTRIC UNIT MOUNTING DETAIL
DETAIL C

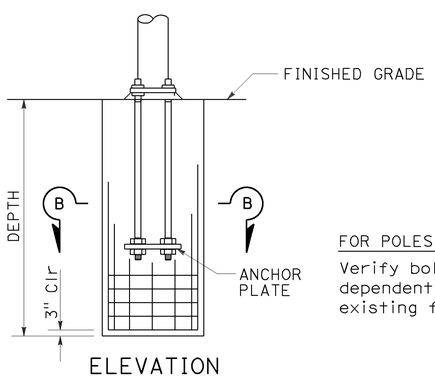

ELEVATION

FOR POLES TO BE INSTALLED ON EXISTING FOUNDATION:
Verify bolt circles, anchor bolt sizes and dependent dimensions for poles to be installed on existing foundations before fabricating the poles.

CAST-IN-DRILLED-HOLE PILE FOUNDATION, REINFORCED PILE
DETAIL A

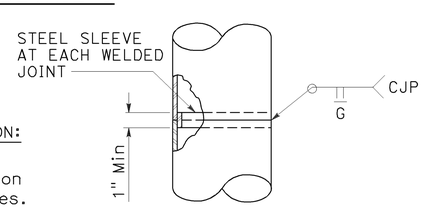

FOR UNIFORM TUBE THICKNESS
DETAIL T-1

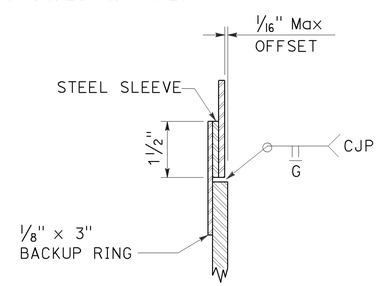

AT TUBE THICKNESS CHANGE
DETAIL T-2

POLE SPLICES
DETAIL T

STATE OF CALIFORNIA
DEPARTMENT OF TRANSPORTATION

ELECTRICAL SYSTEMS (SIGNAL AND LIGHTING STANDARD, DETAIL No. 2)

NO SCALE

RSP ES-7N DATED OCTOBER 30, 2015 SUPERSEDES STANDARD PLAN ES-7N DATED MAY 20, 2011 - PAGE 475 OF THE STANDARD PLANS BOOK DATED 2010.

REVISED STANDARD PLAN RSP ES-7N

9-1-15

Dist	COUNTY	ROUTE	POST MILES TOTAL PROJECT	SHEET No.	TOTAL SHEETS
12	Ora	91	R1.0, 5.4	117	134

REGISTERED CIVIL ENGINEER

October 30, 2015
PLANS APPROVAL DATE

REGISTERED PROFESSIONAL ENGINEER
Stanley P. Johnson
No. C57793
Exp. 3-31-16
CIVIL
STATE OF CALIFORNIA

THE STATE OF CALIFORNIA OR ITS OFFICERS OR AGENTS SHALL NOT BE RESPONSIBLE FOR THE ACCURACY OR COMPLETENESS OF SCANNED COPIES OF THIS PLAN SHEET.

TO ACCOMPANY PLANS DATED 02-29-16

2010 REVISED STANDARD PLAN RSP ES-7Q

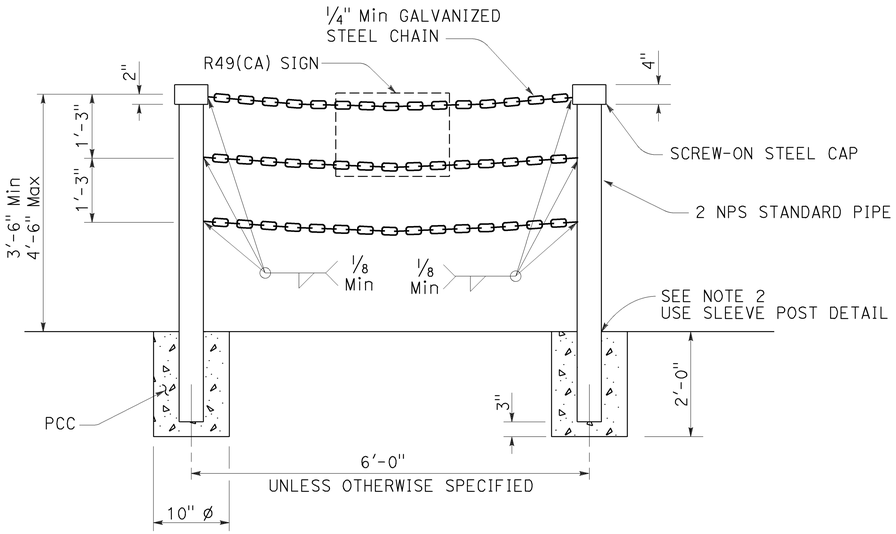

TYPE II

DETAIL A

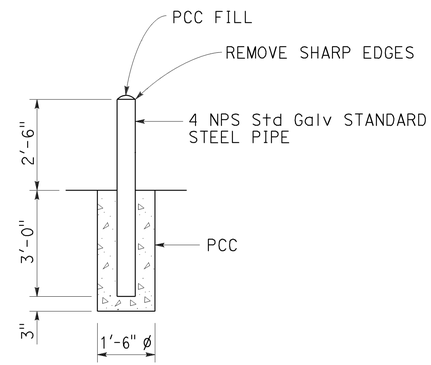

GUARD POST

DETAIL B

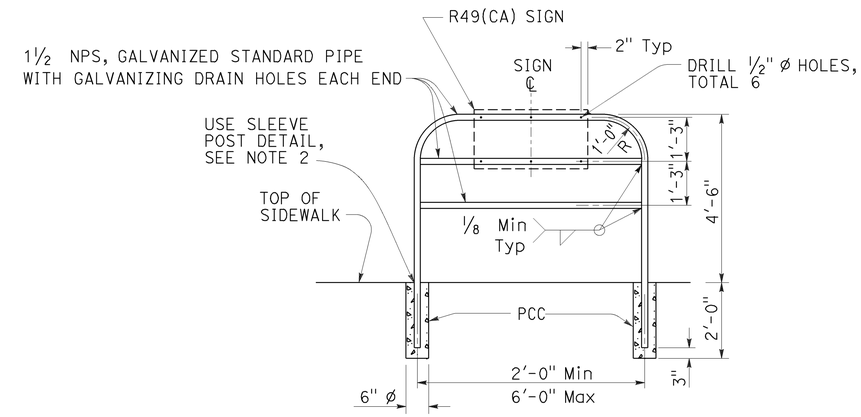

TYPE I

DETAIL C

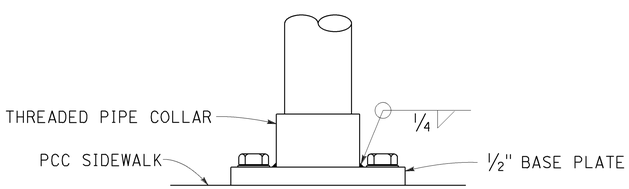

ELEVATION

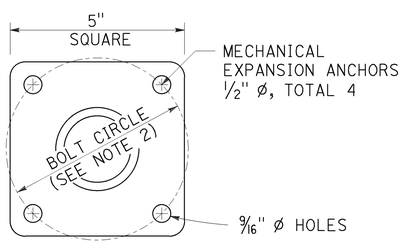

PLAN

POST ANCHORAGE DETAIL

DETAIL D

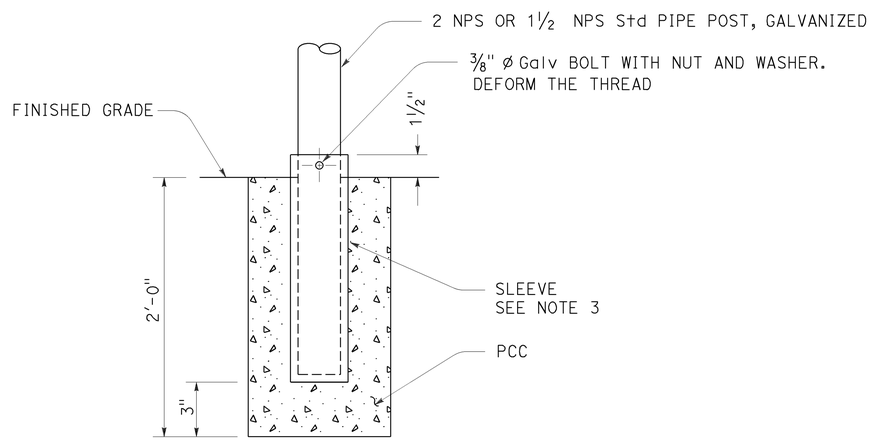

SLEEVE POST DETAIL

Use unless otherwise specified or shown on plans

DETAIL E

NOTES:

1. Pipe post to be set 1'-6" back from face of curb unless otherwise specified.
2. Where barricade posts are installed in existing concrete sidewalk, the post may be anchored to the sidewalk as shown in the "Post Anchorage Detail". Bolt circle diameter shall be 4" minimum for Type I barricade and 5" minimum for Type II barricade.
3. Steel sleeve shall be constructed with an inside diameter 1/10" larger than the post's outside diameter. Wall thickness of sleeve shall be same as post or larger.
4. Alternative details may be submitted for approval by the Engineer.

STATE OF CALIFORNIA
DEPARTMENT OF TRANSPORTATION

ELECTRICAL SYSTEMS (PEDESTRIAN BARRICADES)

NO SCALE

RSP ES-7Q DATED OCTOBER 30, 2015 SUPERSEDES STANDARD PLAN ES-7Q DATED MAY 20, 2011 - PAGE 478 OF THE STANDARD PLANS BOOK DATED 2010.

REVISED STANDARD PLAN RSP ES-7Q

8-24-15

Dist	COUNTY	ROUTE	POST MILES TOTAL PROJECT	SHEET No.	TOTAL SHEETS
12	Ora	91	R1.0, 5.4	118	134

REGISTERED CIVIL ENGINEER

October 30, 2015
PLANS APPROVAL DATE

REGISTERED PROFESSIONAL ENGINEER
Stanley P. Johnson
No. C57793
Exp. 3-31-16
CIVIL
STATE OF CALIFORNIA

THE STATE OF CALIFORNIA OR ITS OFFICERS OR AGENTS SHALL NOT BE RESPONSIBLE FOR THE ACCURACY OR COMPLETENESS OF SCANNED COPIES OF THIS PLAN SHEET.

TO ACCOMPANY PLANS DATED 02-29-16

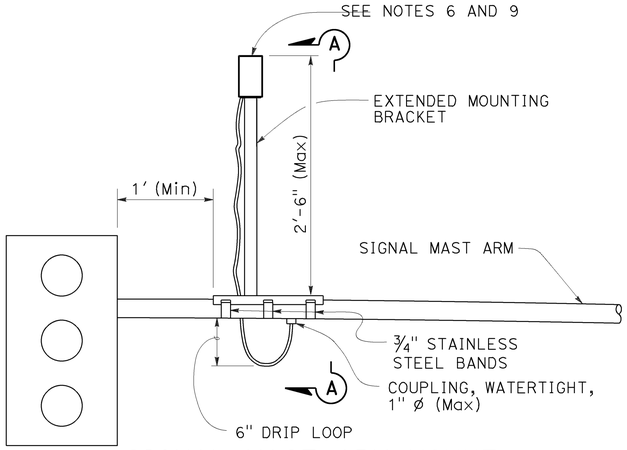

SIGNAL MAST ARM MOUNT

DETAIL A

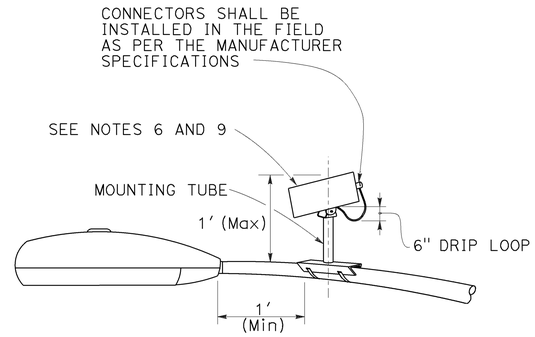

LUMINAIRE MAST ARM MOUNT

DETAIL B

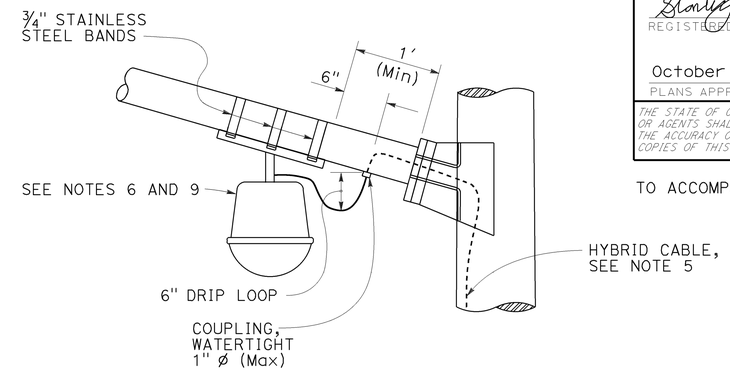

LUMINAIRE MAST ARM MOUNT

DETAIL C

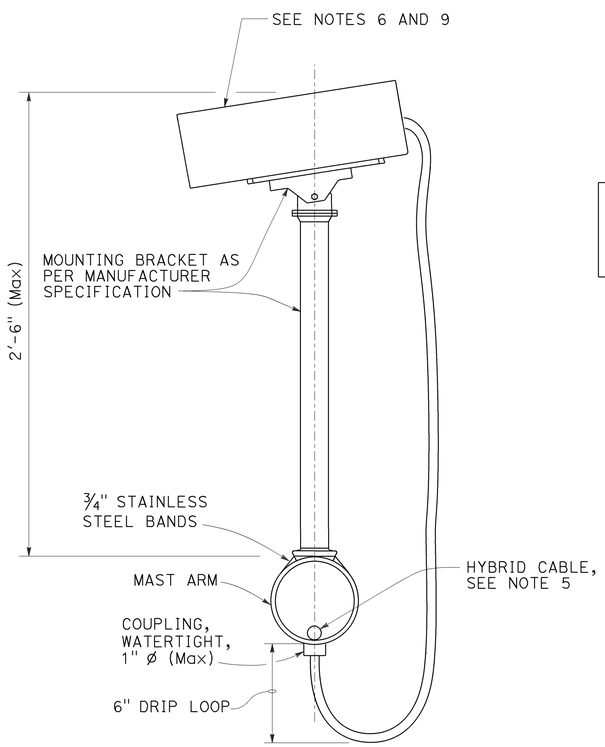

SECTION A-A

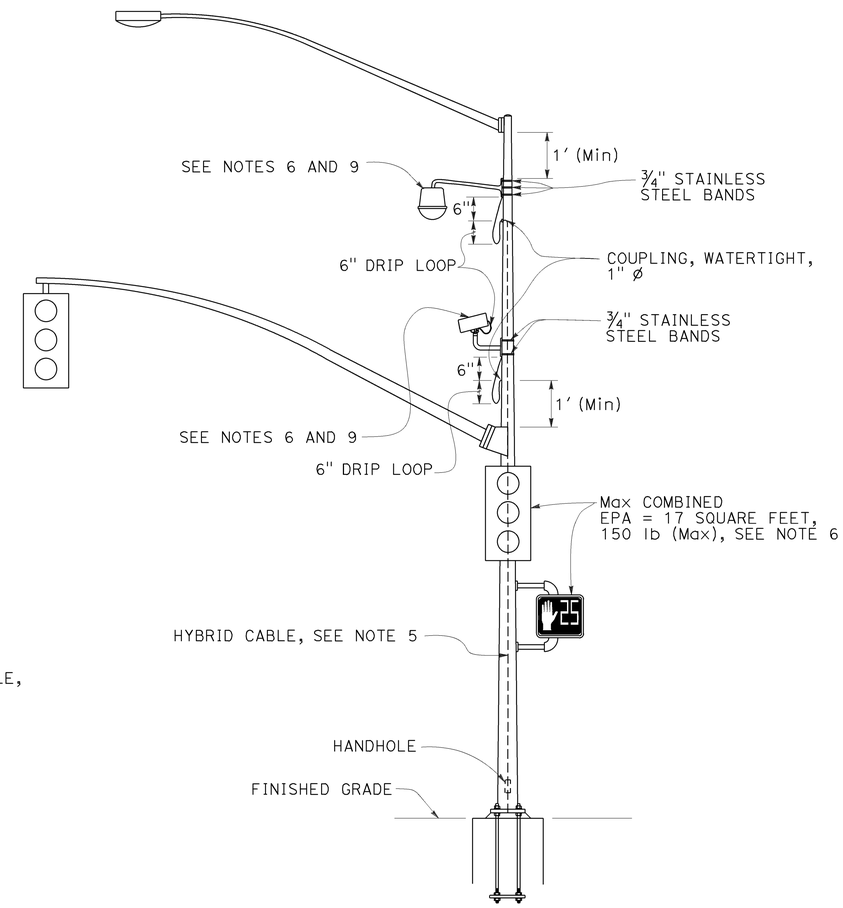

SIGNAL POLE MOUNT

DETAIL D

NOTES:

1. Exact mounting location of miscellaneous attachment and bracket shall be approved by the Engineer per manufacturer's recommendation.
2. Location of cable entrances on signal pole shall be a minimum of 1′ from any flange or base plate.
3. Hybrid cable entrances on signal pole shall be drilled for weathertight coupling as required.
4. Hybrid cable shall have a drip loop at the entrance into signal pole, luminaire mast arm and signal mast arm.
5. A single hybrid cable shall run continuous and shall not be twisted from the miscellaneous attachment to the controller cabinet. No splices shall be allowed.
6. Use the manufacturer's Effective Projected Area (EPA) for miscellaneous attachment. The maximum EPA for each miscellaneous attachment shall be 1.6 square feet with 10 lb Max.
7. Maximum of two miscellaneous attachments per traffic signal standard.
8. Maximum of one miscellaneous attachment per mast arm.
9. Miscellaneous attachment shall be mounted using clamping devices.

STATE OF CALIFORNIA
DEPARTMENT OF TRANSPORTATION

ELECTRICAL SYSTEMS (SIGNAL AND LIGHTING, MISCELLANEOUS ATTACHMENT)

NO SCALE

RSP ES-7R DATED OCTOBER 30, 2015 SUPERSEDES RSP ES-7R DATED JULY 19, 2013 AND STANDARD PLAN ES-7R DATED MAY 20, 2011 - PAGE 479 OF THE STANDARD PLANS BOOK DATED 2010.

REVISED STANDARD PLAN RSP ES-7R

2010 REVISED STANDARD PLAN RSP ES-7R

8-21-15

DIST	COUNTY	ROUTE	POST MILES TOTAL PROJECT	SHEET NO.	TOTAL SHEETS
12	Ora	91	R1.0, 5.4	119	134

Theresa Gabriel
REGISTERED ELECTRICAL ENGINEER

October 30, 2015
PLANS APPROVAL DATE

REGISTERED PROFESSIONAL ENGINEER Theresa Aziz Gabriel No. E15129 Exp. 6-30-16 ELECTRICAL STATE OF CALIFORNIA

THE STATE OF CALIFORNIA OR ITS OFFICERS OR AGENTS SHALL NOT BE RESPONSIBLE FOR THE ACCURACY OR COMPLETENESS OF SCANNED COPIES OF THIS PLAN SHEET.

TO ACCOMPANY PLANS DATED 02-29-16

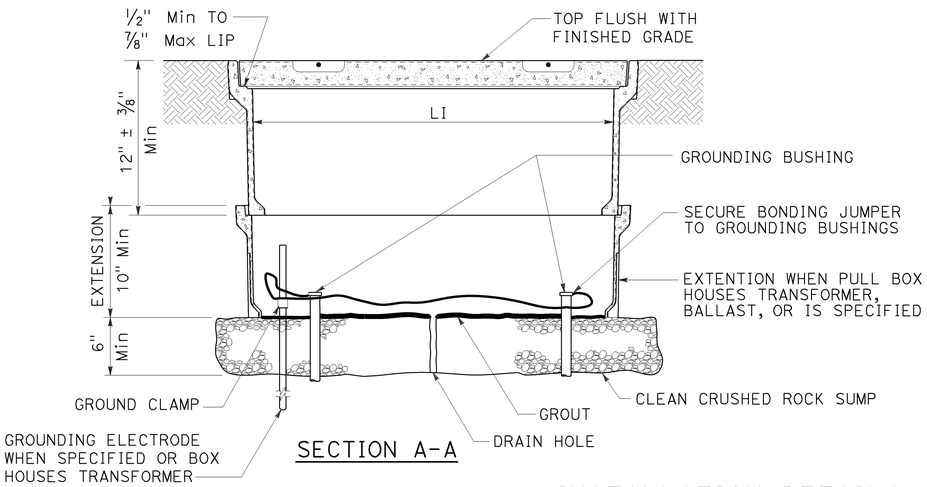

SECTION A-A

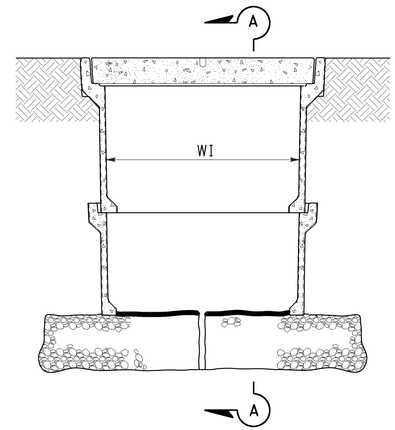

SIDE VIEW

INSTALLATION DETAILS

DETAIL A

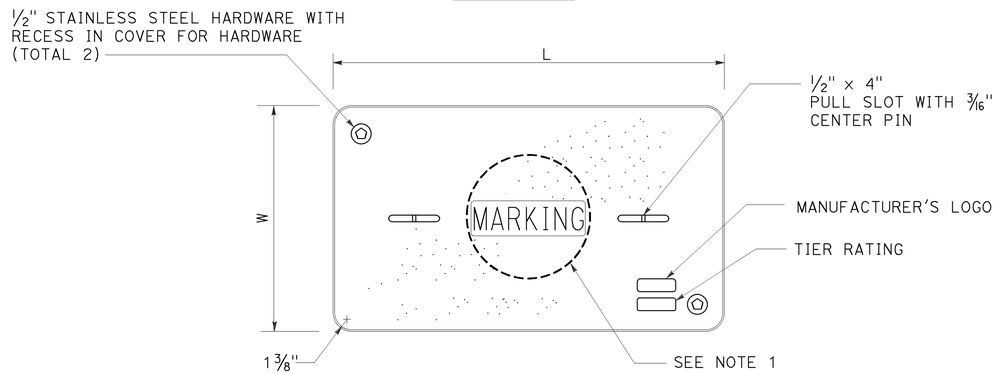

COVER TOP VIEW

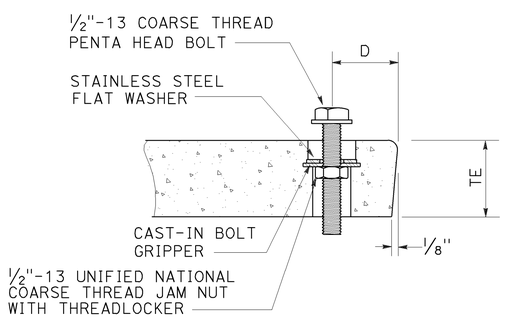

TYPICAL COVER CAPTIVE BOLT

OR SIMILAR

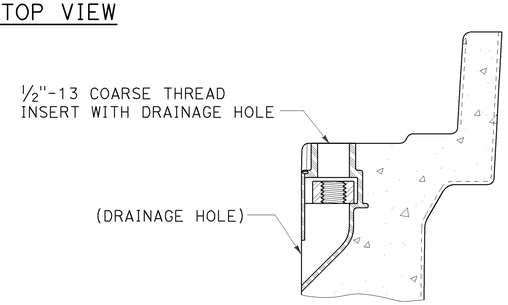

TYPICAL THREADED INSERT

OR SIMILAR

NOTES:

1. Pull box covers shall be marked as follows: "SERVICE" Service circuits between service point and service disconnect; "SPRINKLER-CONTROL" sprinkler control circuits, 50 V or less; "CALTRANS" on all pull boxes, except pull boxes marked "SPRINKLER-CONTROL"; and "TELEPHONE" Telephone service;
   - A) No. 3½ pull box.
     - 1) "SIGNAL" - Traffic signal circuits with or without lighting or sign lighting circuits.
     - 2) "LIGHTING" - Lighting or sign lighting circuits where voltage is under 600 V.
   - B) No. 5, 6, 9 or 9A pull box.
     - 1) "TRAFFIC SIGNAL" - Traffic signal circuits with or without lighting or sign lighting circuits.
     - 2) "LIGHTING" - Lighting or sign lighting circuits where voltage is under 600 V.
     - 3) "LIGHTING-HIGH VOLTAGE" - Lighting or sign lighting circuits where voltage is above 600 V.
     - 4) "IRRIGATION" - Circuits to irrigation controller 120 V or more.
     - 5) "RAMP METER" - Ramp meter circuits.
     - 6) "COUNT STATION" - Count or speed monitor circuits.
     - 7) "COMMUNICATIONS" - Communication circuits.
     - 8) "TOS COMMUNICATIONS" - TOS communication line.
     - 9) "TOS POWER" - TOS power.
     - 10) "TDC POWER" - Telephone demarcation cabinet power.
     - 11) "CCTV" - Closed circuit television circuits.
     - 12) "TMS" - Traffic monitoring station circuits.
     - 13) "CMS" - Changeable message sign circuits.
     - 14) "HAR" - Highway advisory radio circuits.
     - 15) "BOOSTER PUMP" - Booster pump circuit.
2. The nominal dimensions of the opening in which the cover sets shall be the same as the cover dimensions except the length and width dimensions shall be 1/8" greater.
3. Covers and boxes shall be interchangeable with California standard male and female gages. When interchanged with a standard male or female gage, the top surfaces shall be flush within 1/8". Top outside radius of covers and pull boxes shall have a 1/8" radius.
4. Pull box extension may be another pull box as long as the bottom edge of the pull box can fit into the cover opening.
5. Dimensions for the cover for non-traffic pull box are nominal values.

DIMENSION TABLE

PULL BOX	PULL BOX					COVER				
	MINIMUM DEPTH BOX	MINIMUM DEPTH EXTENSION	MINIMUM WEIGHT	LI Min	WI Min	TE	D	L	W	MINIMUM WEIGHT
No. 3½	12"	N/A	40 lb	1' - 3"	9"	1¾"	1¾"	1'-3¼" - 1'-3⅜"	10" - 10⅛"	30 lb
No. 5	12"	10"	55 lb	1' - 8"	11"	2"	1¾"	1'-11¼"	1'-1¾"	60 lb
No. 6	12"	10"	70 lb	2' - 4¼"	1' - 3¼"	2"	2"	2'-6½"	1'-5½"	85 lb

STATE OF CALIFORNIA
DEPARTMENT OF TRANSPORTATION

ELECTRICAL SYSTEMS (NON-TRAFFIC PULL BOX)

NO SCALE

RSP ES-8A DATED OCTOBER 30, 2015 SUPERSEDES RSP ES-8A DATED JULY 19, 2013 AND RSP ES-8A DATED JANUARY 20, 2012 THAT SUPPLEMENTS THE STANDARD PLANS BOOK DATED 2010.

REVISED STANDARD PLAN RSP ES-8A

2010 REVISED STANDARD PLAN RSP ES-8A

8-25-15

DIST	COUNTY	ROUTE	POST MILES TOTAL PROJECT	SHEET NO.	TOTAL SHEETS
12	Ora	91	R1.0, 5.4	120	134

Theresa Gabriel
REGISTERED ELECTRICAL ENGINEER

October 30, 2015
PLANS APPROVAL DATE

REGISTERED PROFESSIONAL ENGINEER
Theresa Aziz Gabriel
No. E15129
Exp. 6-30-16
ELECTRICAL
STATE OF CALIFORNIA

THE STATE OF CALIFORNIA OR ITS OFFICERS OR AGENTS SHALL NOT BE RESPONSIBLE FOR THE ACCURACY OR COMPLETENESS OF SCANNED COPIES OF THIS PLAN SHEET.

TO ACCOMPANY PLANS DATED 02-29-16

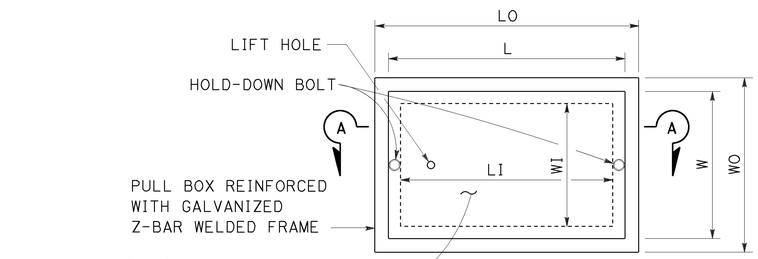

TOP VIEW

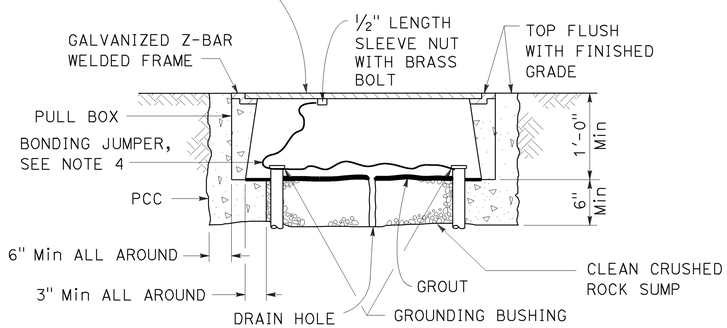

SECTION A-A

No. 3½(T), No. 5(T) AND No. 6(T) TRAFFIC PULL BOX

NOTES:

1. Traffic pull box shall be provided with steel cover and special concrete footing. Steel cover shall have embossed non-skid pattern.
2. Steel reinforcing shall be as regularly used in the standard products of the respective manufacturer.
3. Pull box covers shall be marked as follows: "SERVICE" Service circuits between service point and service disconnect; "SPRINKLER-CONTROL" Sprinkler control circuits, 50 V or less; "CALTRANS" On all pull boxes, except pull boxes marked "SPRINKLER-CONTROL"; and "TELEPHONE" Telephone service.
   A) No. 3½(T) pull box.
      1) "SIGNAL" - Traffic signal circuits with or without lighting or sign lighting circuits.
      2) "LIGHTING" - Lighting or sign lighting circuits where voltage is under 600 V.
   B) No. 5(T) or 6(T) pull box.
      1) "TRAFFIC SIGNAL" - Traffic signal circuits with or without lighting or sign lighting circuits.
      2) "LIGHTING" - Lighting or sign lighting circuits where voltage is under 600 V.
      3) "LIGHTING-HIGH VOLTAGE" - Lighting or sign lighting circuits where voltage is above 600 V.
      4) "IRRIGATION" - Circuits to irrigation controller 120 V or more.
      5) "RAMP METER" - Ramp meter circuits.
      6) "COUNT STATION" - Count or speed monitor circuits.
      7) "COMMUNICATION" - Communication circuits.
      8) "TOS COMMUNICATIONS" - TOS communications line.
      9) "TOS POWER" - TOS power.
      10) "TDC POWER" - Telephone demarcation cabinet power.
      11) "CCTV" - Closed circuit television circuits.
      12) "TMS" - Traffic monitoring station circuits.
      13) "CMS" - Changeable message sign circuits.
      14) "HAR" - Highway advisory radio circuits.
      15) "BOOSTER PUMP" - Booster pump circuit.
4. Bonding jumper for metal covers shall be 3' long, minimum.
5. The nominal dimensions of the opening in which the cover sets shall be the same as the cover dimensions except the length and width dimensions shall be ⅛" greater.
6. Covers and boxes shall be interchangeable with California standard male and female gages. When interchanged with a standard male or female gage, the top surfaces shall be flush within ⅛".

DIMENSION TABLE

PULL BOX	PULL BOX						COVER	
	MINIMUM * THICKNESS	MINIMUM DEPTH BOX AND EXTENSION	LO	LI	WO	WI	L **	W **
No. 3½(T)	1½"	1'-0"	1'-10" - 1'-11"	1'-5" - 1'-6½"	1'-3" - 1'-4"	10" - 1'-0"	1'-8" -1'-8½"	1'-1" - 1'-2"
No. 5(T)	1¾"	1'-0"	2'-5" - 2'-6"	2'-0" - 2'-1"	1'-6" - 1'-7"	1'-1" - 1'-2"	2'-3" - 2'-3½"	1'-4" - 1'-4½"
No. 6(T)	2"	1'-0"	2'-11" - 3'-1"	2'-6" - 2'-7"	1'-10" - 2'-0"	1'-5" - 1'-6"	2'-9" - 2'-9½"	1'-8" - 1'-8½"

* EXCLUDING CONDUIT WEB ** TOP DIMENSION

STATE OF CALIFORNIA
DEPARTMENT OF TRANSPORTATION

ELECTRICAL SYSTEMS (TRAFFIC PULL BOX)

NO SCALE

RSP ES-8B DATED OCTOBER 30, 2015 SUPERSEDES RSP ES-8B DATED JULY 19, 2013 AND RSP ES-8B DATED JANUARY 20, 2012 THAT SUPPLEMENTS THE STANDARD PLANS BOOK DATED 2010.

REVISED STANDARD PLAN RSP ES-8B

2010 REVISED STANDARD PLAN RSP ES-8B

8-25-15

Dist	COUNTY	ROUTE	POST MILES TOTAL PROJECT	SHEET No.	TOTAL SHEETS
12	Ora	91	R1.0, 5.4	121	134

Theresa Gabriel
REGISTERED ELECTRICAL ENGINEER

October 30, 2015
PLANS APPROVAL DATE

REGISTERED PROFESSIONAL ENGINEER
Theresa Aziz Gabriel
No. E15129
Exp. 6-30-16
ELECTRICAL
STATE OF CALIFORNIA

THE STATE OF CALIFORNIA OR ITS OFFICERS OR AGENTS SHALL NOT BE RESPONSIBLE FOR THE ACCURACY OR COMPLETENESS OF SCANNED COPIES OF THIS PLAN SHEET.

TO ACCOMPANY PLANS DATED 02-29-16

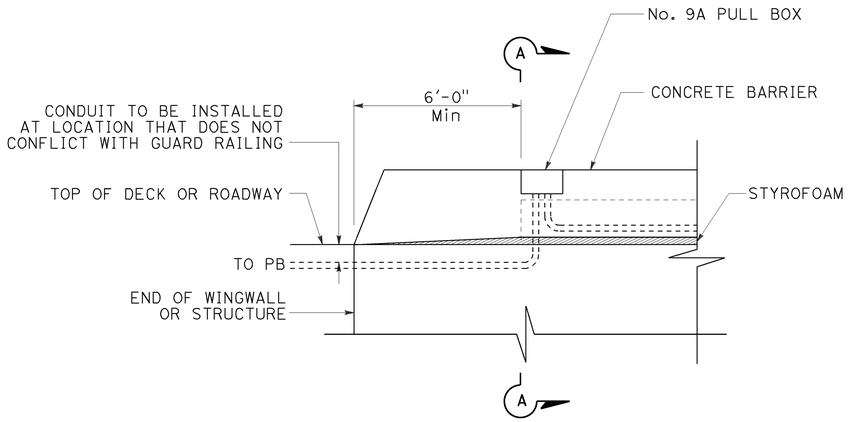

SIDE VIEW

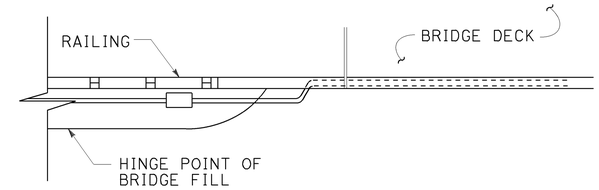

TOP VIEW

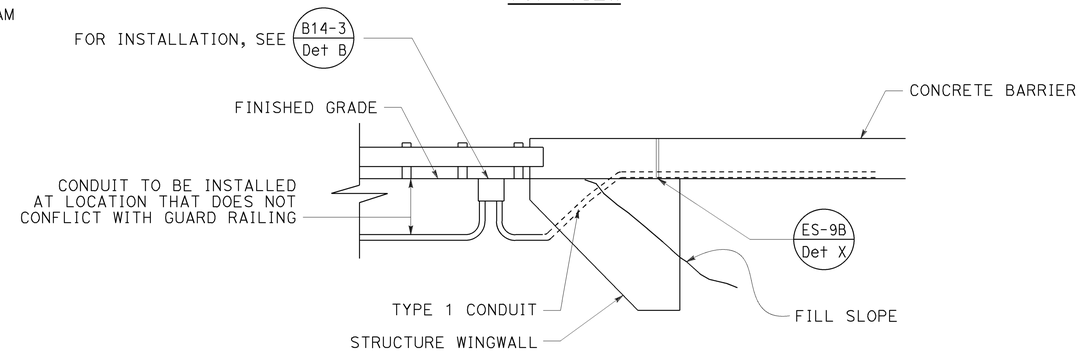

SIDE VIEW

CONDUIT TERMINATION
DETAIL I

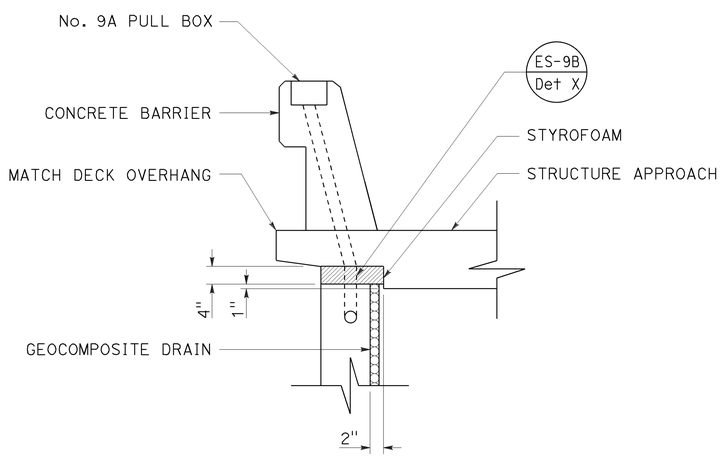

SECTION A-A

CONDUIT TERMINATION
DETAIL A

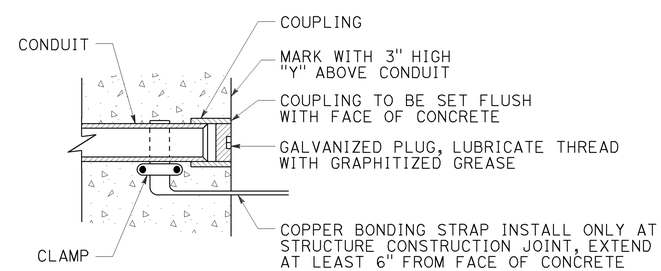

CONDUIT TERMINATION
DETAIL C

STATE OF CALIFORNIA
DEPARTMENT OF TRANSPORTATION

ELECTRICAL SYSTEMS (STRUCTURE PULL BOX INSTALLATIONS)

NO SCALE

RSP ES-9A DATED OCTOBER 30, 2015 SUPERSEDES STANDARD PLAN ES-9A DATED MAY 20, 2011 - PAGE 481 OF THE STANDARD PLANS BOOK DATED 2010.

REVISED STANDARD PLAN RSP ES-9A

2010 REVISED STANDARD PLAN RSP ES-9A

Dist	COUNTY	ROUTE	POST MILES TOTAL PROJECT	SHEET No.	TOTAL SHEETS
12	Ora	91	R1.0, 5.4	122	134

Jaswinder S. Gill
REGISTERED ELECTRICAL ENGINEER

October 30, 2015
PLANS APPROVAL DATE

REGISTERED PROFESSIONAL ENGINEER Jaswinder S. Gill No. E18551 Exp. 12-31-16 ELECTRICAL STATE OF CALIFORNIA

THE STATE OF CALIFORNIA OR ITS OFFICERS OR AGENTS SHALL NOT BE RESPONSIBLE FOR THE ACCURACY OR COMPLETENESS OF SCANNED COPIES OF THIS PLAN SHEET.

TO ACCOMPANY PLANS DATED 02-29-16

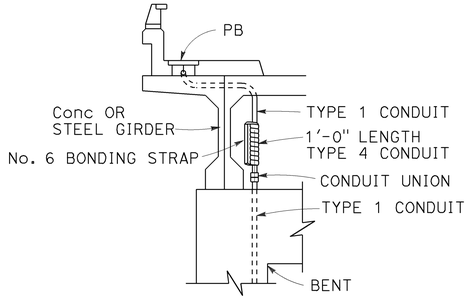

CONDUIT RISER CONNECTION

DETAIL R

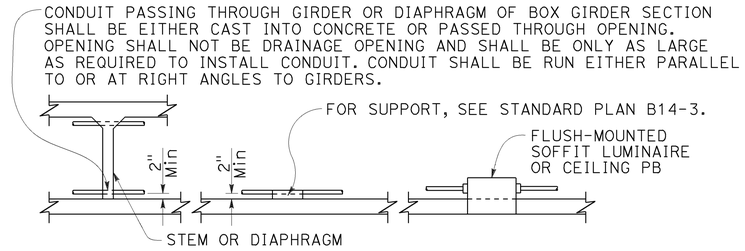

CONDUIT INSTALLATION WITHIN BOX GIRDER SECTIONS

DETAIL S

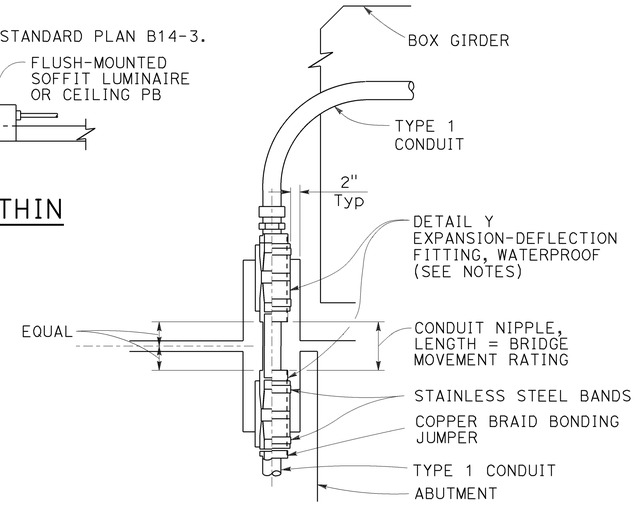

NOTES:

1. Fitting and pocket required only where movement can occur between girder and abutment.
2. Fill pocket around fitting with resilient waterproof compound.

CONDUIT RISER CONNECTION AT COLUMN, ABUTMENT OR STRUCTURE WING WALL

DETAIL U

NOTES:

1. Except for sidewalk joints, a conduit expansion fitting or expansion-deflection fitting shall be installed at each ½" or greater structure joint, hinge or abutment.
2. Fittings or combination of fittings shall be installed to accommodate the movement rating as shown on the structure plans.
3. Fittings shall be installed parallel to superstructure girders.
4. Where lateral movement greater than ¼" may occur, a neoprene sleeve expansion-deflection fitting shall be installed straddling the joint.

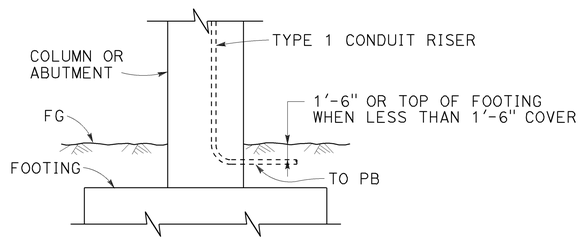

LOWER END OF CONDUIT RISER AT COLUMN OR ABUTMENT

DETAIL T

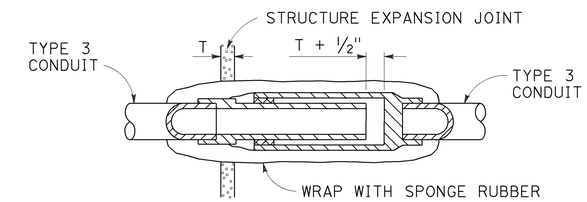

NON-METALLIC CONDUIT EXPANSION FITTING INSTALLATION DETAIL

To be used only when shown or specified on Project Plans

DETAIL V

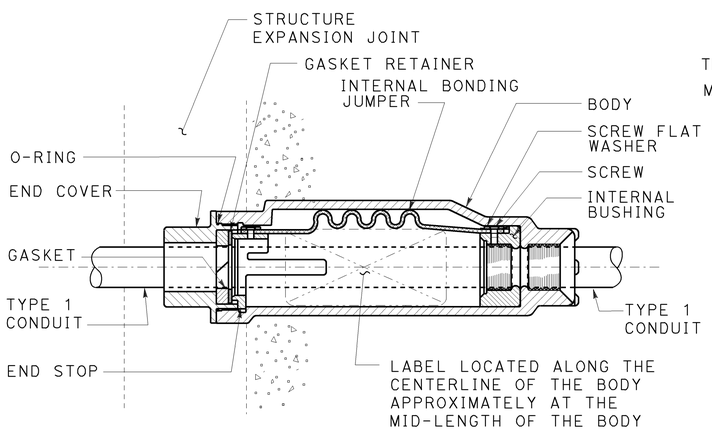

CONDUIT EXPANSION FITTING

DETAIL X

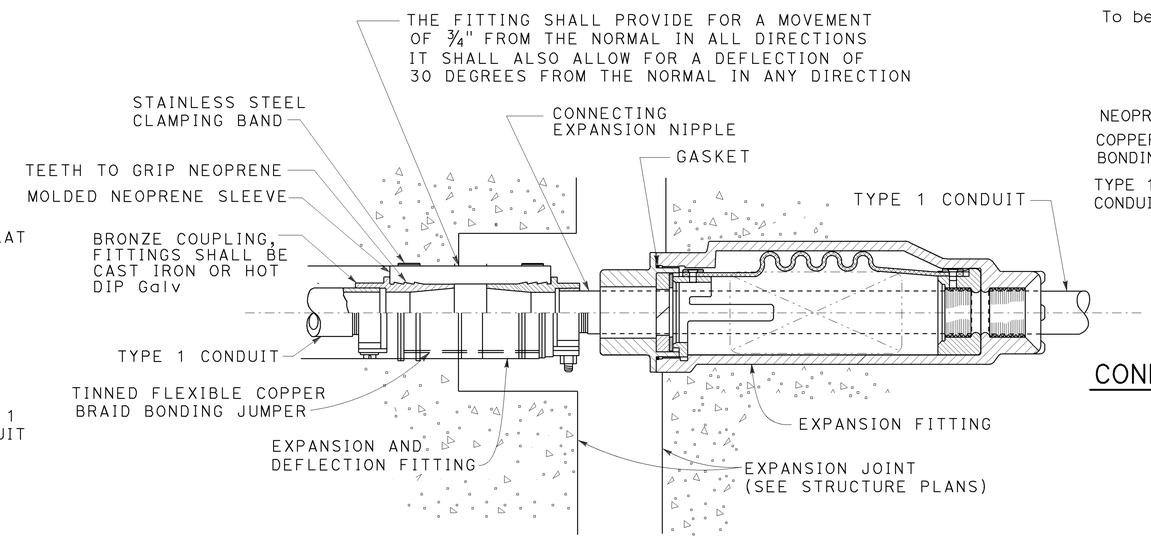

COMBINATION EXPANSION-DEFLECTION FITTINGS METALLIC CONDUIT INSTALLATION

DETAIL XY

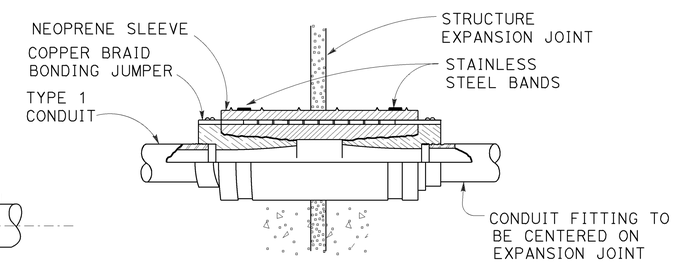

CONDUIT EXPANSION-DEFLECTION FITTING

DETAIL Y

STATE OF CALIFORNIA
DEPARTMENT OF TRANSPORTATION

ELECTRICAL SYSTEMS (CONDUIT RISER AND EXPANSION FITTING, STRUCTURE INSTALLATIONS)

NO SCALE

RSP ES-9B DATED OCTOBER 30, 2015 SUPERSEDES STANDARD PLAN ES-9B DATED MAY 20, 2011 - PAGE 482 OF THE STANDARD PLANS BOOK DATED 2010.

REVISED STANDARD PLAN RSP ES-9B

2010 REVISED STANDARD PLAN RSP ES-9B

9-1-15

Dist	COUNTY	ROUTE	POST MILES TOTAL PROJECT	SHEET No.	TOTAL SHEETS
12	Ora	91	R1.0, 5.4	123	134

Theresa Gabriel
REGISTERED ELECTRICAL ENGINEER

October 30, 2015
PLANS APPROVAL DATE

REGISTERED PROFESSIONAL ENGINEER Theresa Aziz Gabriel No. E15129 Exp. 6-30-16 ELECTRICAL STATE OF CALIFORNIA

THE STATE OF CALIFORNIA OR ITS OFFICERS OR AGENTS SHALL NOT BE RESPONSIBLE FOR THE ACCURACY OR COMPLETENESS OF SCANNED COPIES OF THIS PLAN SHEET.

TO ACCOMPANY PLANS DATED 02-29-16

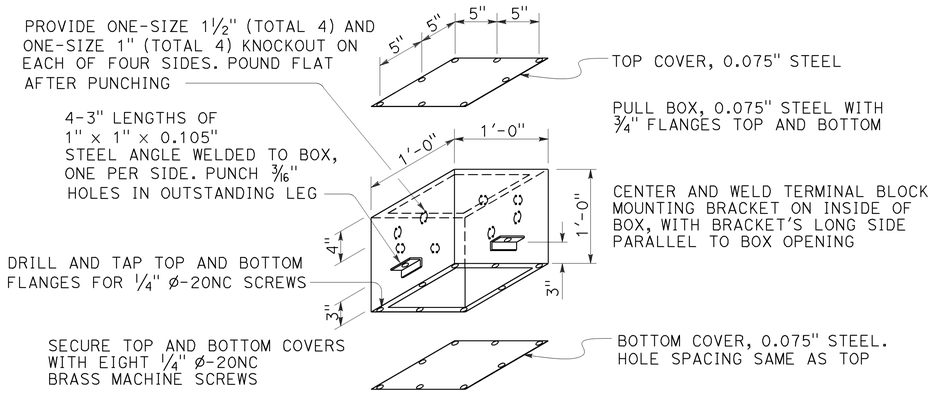

No. 7 CEILING PULL BOX

See Note 6

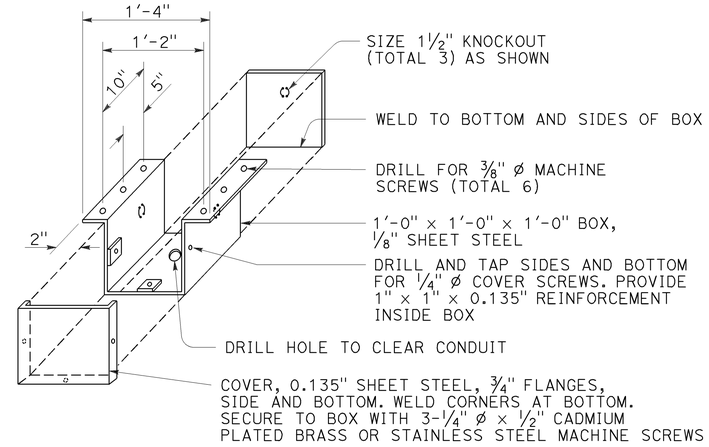

No. 8 PULL BOX

NOTES:

1. Corner joints shall be lapped and secured by spot welding or riveting.
2. Where cap screws are used to attach cover to box, either of the following methods of providing adequate threading may be used:
   a. Tack weld stainless steel Hex nut to bottom of flange (total 4)
   b. Tack weld a ¼" × ⅝" × 8" bar beneath flange (total 2)
3. Pound knockouts flat after punching.
4. Multiple size knockouts (concentric) shall not be permitted.
5. Pull box covers shall be marked as specified on Revised Standard Plans RSP ES-8A and RSP ES-8B.
6. Installation of No. 7 pull box:
   a) Install with bottom flange flush with concrete.
   b) Both covers shall be on a box during pouring.
7. Install box parallel to top of railing. Cover box during pouring with ¼" plywood of sufficient size to provide 1:1 chamfer on 3 sides of cover. Upper edge of plywood shall fit against lower edge of rain tight hood.

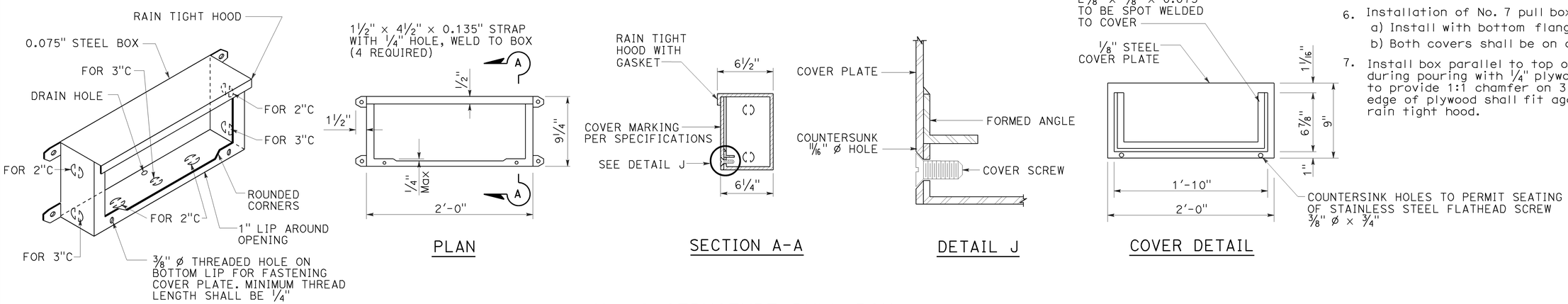

No. 9 STRUCTURE PULL BOX

See Note 7

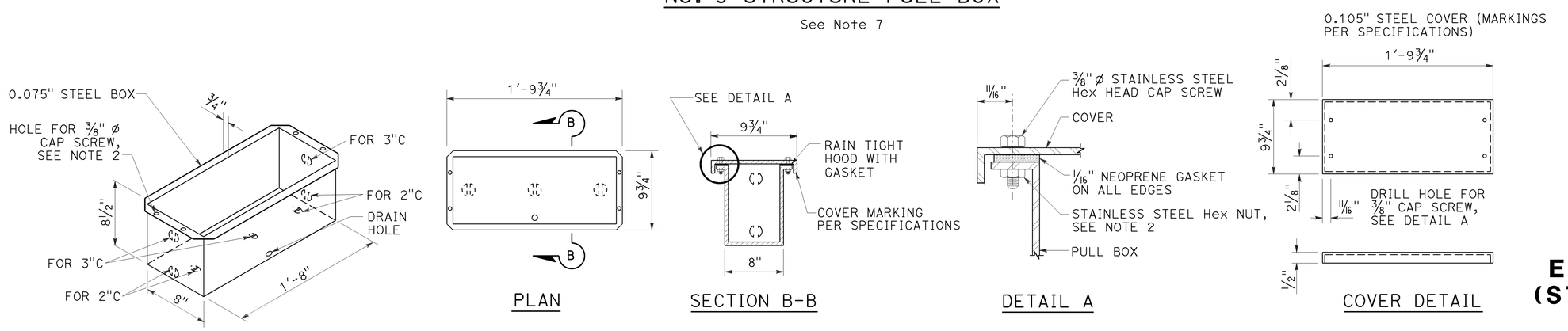

No. 9A STRUCTURE PULL BOX

STATE OF CALIFORNIA
DEPARTMENT OF TRANSPORTATION

ELECTRICAL SYSTEMS (STRUCTURE PULL BOX)

NO SCALE

RSP ES-9C DATED OCTOBER 30, 2015 SUPERSEDES STANDARD PLAN ES-9C DATED MAY 20, 2011 - PAGE 483 OF THE STANDARD PLANS BOOK DATED 2010.

REVISED STANDARD PLAN RSP ES-9C

2010 REVISED STANDARD PLAN RSP ES-9C

9-1-15

Dist	COUNTY	ROUTE	POST MILES TOTAL PROJECT	SHEET No.	TOTAL SHEETS
12	Ora	91	R1.0, 5.4	124	134

Theresa Gabriel
REGISTERED ELECTRICAL ENGINEER

October 30, 2015
PLANS APPROVAL DATE

REGISTERED PROFESSIONAL ENGINEER Theresa Aziz Gabriel No. E15129 Exp. 6-30-16 ELECTRICAL STATE OF CALIFORNIA

THE STATE OF CALIFORNIA OR ITS OFFICERS OR AGENTS SHALL NOT BE RESPONSIBLE FOR THE ACCURACY OR COMPLETENESS OF SCANNED COPIES OF THIS PLAN SHEET.

TO ACCOMPANY PLANS DATED 02-29-16

2010 REVISED STANDARD PLAN RSP ES-9D

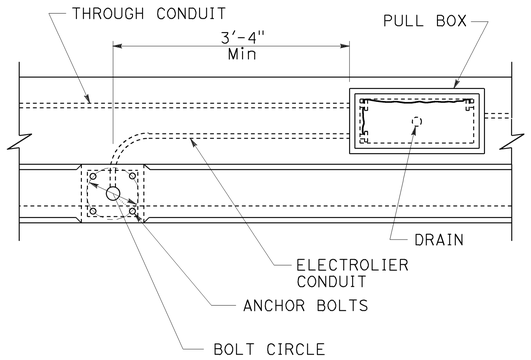

TOP VIEW

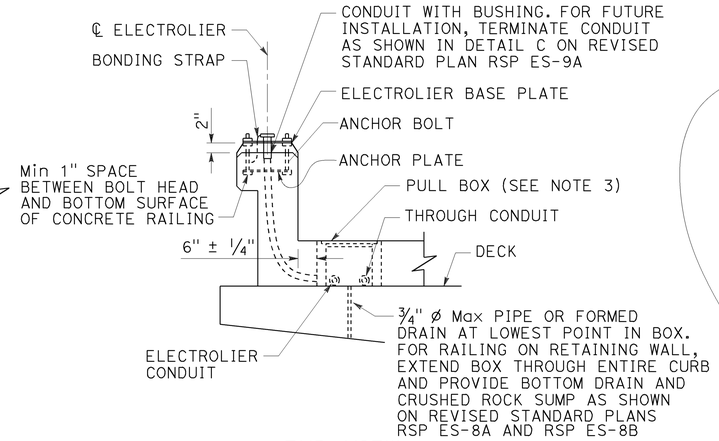

END VIEW

No. 3½, 5, OR 6 PULL BOX INSTALLATION

DETAIL A

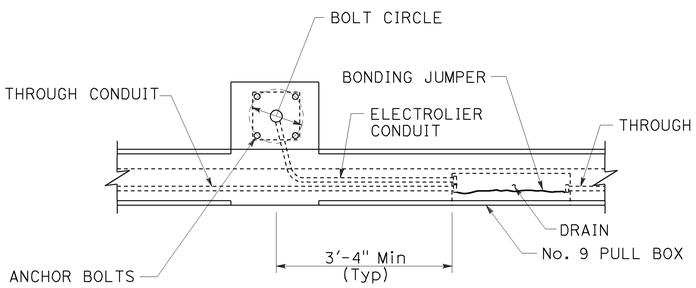

TOP VIEW

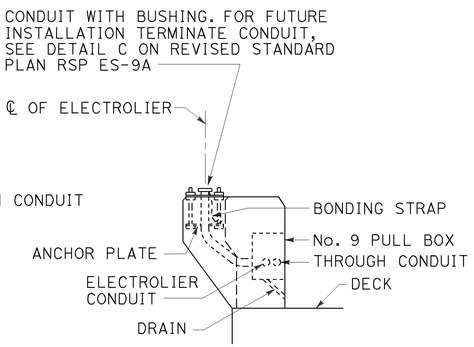

END VIEW

No. 9 PULL BOX INSTALLATION

DETAIL B

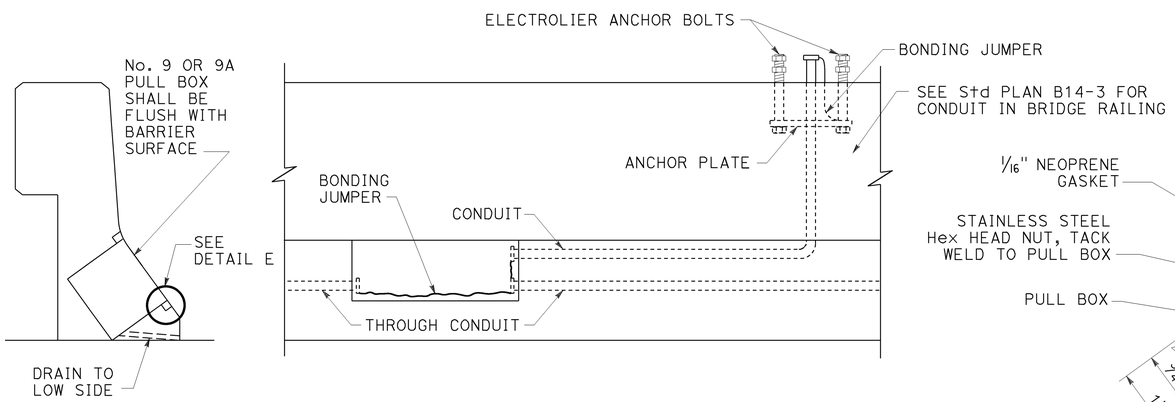

INSTALLATION IN SLOPING PARAPETS

DETAIL D

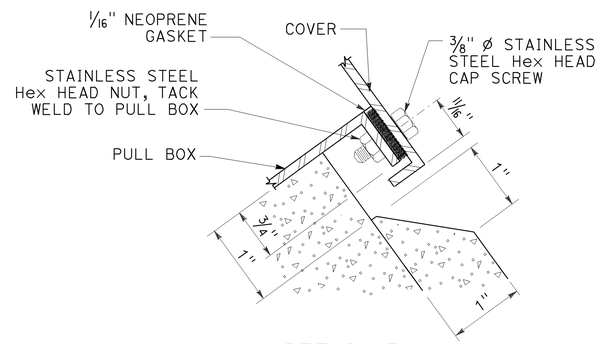

DETAIL E

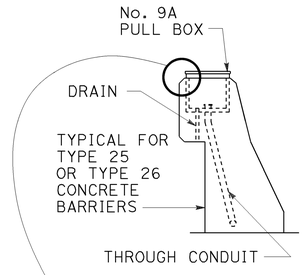

END VIEW

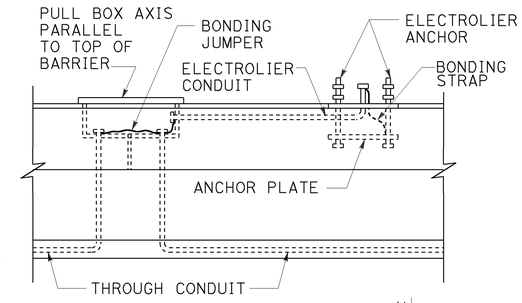

SIDE VIEW

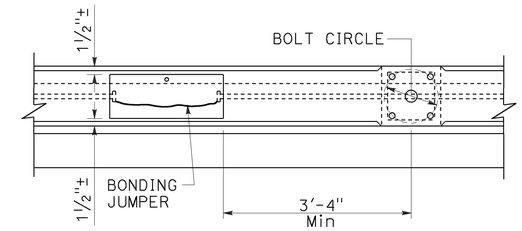

TOP VIEW

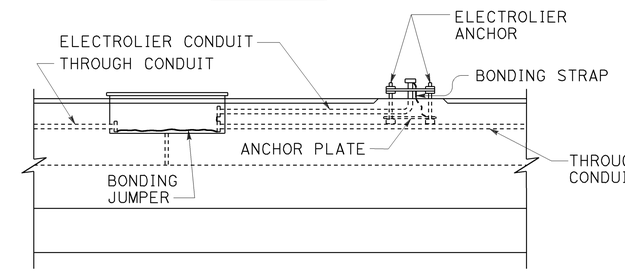

SIDE VIEW

No. 9A PULL BOX INSTALLATION

DETAIL C

NOTES:

1. Axis of pull box shall be parallel to top of barrier, sidewalk or railing.
2. See railing sheet for reinforcement and structural details at electroliers and pull boxes.
3. Top of pull boxes in sidewalk areas shall be flush with sidewalk. Modify base of pull box as required.
4. Boxes inside of vertical barrier or railing shall be closed during pouring of PCC with 1/4" plywood of sufficient size to provide 1:1 chamfer on 3 sides of cover. Upper edge of plywood shall fit against lower edge of raintight hood.
5. Use drain in center if box is horizontal, or at low end if box is inclined. When box is mounted in sloping parapet 1/2" elongated drain hole inside at center or near end as required for drainage.
6. For electrolier anchorage bolts and grouting details, see Standard Plan ES-6B.
7. See Standard Plan B14-3 for conduit in concrete barrier.

STATE OF CALIFORNIA
DEPARTMENT OF TRANSPORTATION

ELECTRICAL SYSTEMS (STRUCTURE PULL BOX INSTALLATIONS)

NO SCALE

RSP ES-9D DATED OCTOBER 30, 2015 SUPERSEDES STANDARD PLAN ES-9D DATED MAY 20, 2011 - PAGE 484 OF THE STANDARD PLANS BOOK DATED 2010.

REVISED STANDARD PLAN RSP ES-9D

Dist	COUNTY	ROUTE	POST MILES TOTAL PROJECT	SHEET No.	TOTAL SHEETS
12	Ora	91	R1.0, 5.4	125	134

Theresa Gabriel
REGISTERED ELECTRICAL ENGINEER

October 30, 2015
PLANS APPROVAL DATE

REGISTERED PROFESSIONAL ENGINEER
Theresa Aziz Gabriel
No. E15129
Exp. 6-30-16
ELECTRICAL
STATE OF CALIFORNIA

THE STATE OF CALIFORNIA OR ITS OFFICERS OR AGENTS SHALL NOT BE RESPONSIBLE FOR THE ACCURACY OR COMPLETENESS OF SCANNED COPIES OF THIS PLAN SHEET.

TO ACCOMPANY PLANS DATED 02-29-16

NOTE:
Curves represent the minimum footcandle (FC).

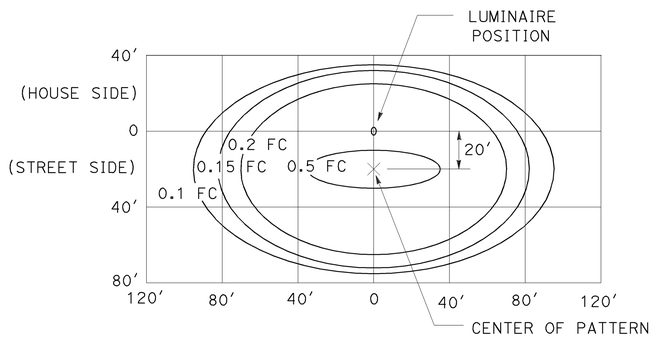

LED LUMINAIRE 165 W
34′ Mounting Height

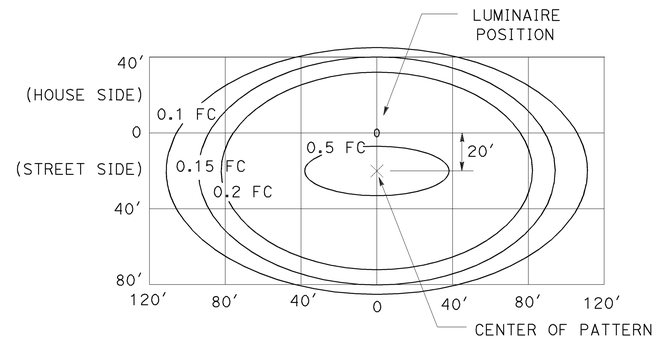

LED LUMINAIRE 235 W
40′ Mounting Height

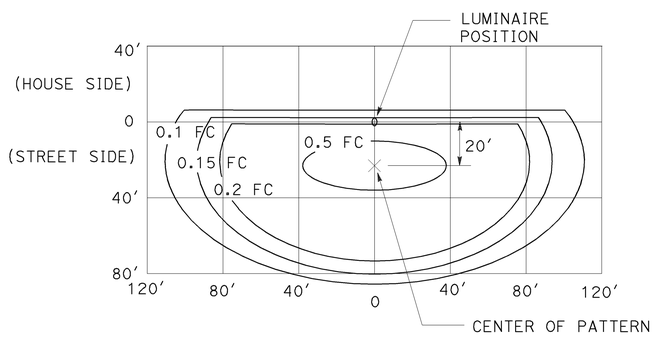

LED LUMINAIRE 235 W
40′ Mounting Height
with back side control

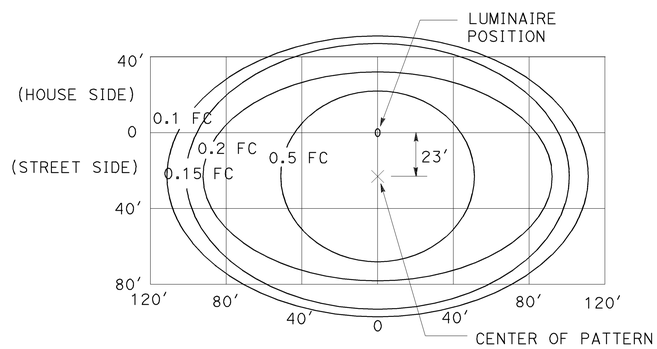

LED LUMINAIRE 300 W
40′ Mounting Height

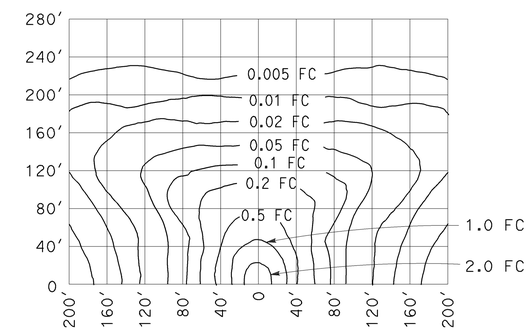

LOW-PRESSURE SODIUM LUMINAIRE 180 W
40′ Mounting Height
Lamp operated at 33,000 lm

STATE OF CALIFORNIA
DEPARTMENT OF TRANSPORTATION

ELECTRICAL SYSTEMS (ISOFOOTCANDLE CURVES)

NO SCALE

RSP ES-10A DATED OCTOBER 30, 2015 SUPERSEDES RSP ES-10A DATED JULY 19, 2013 THAT SUPPLEMENTS THE STANDARD PLANS BOOK DATED 2010.

REVISED STANDARD PLAN RSP ES-10A

2010 REVISED STANDARD PLAN RSP ES-10A

Dist	COUNTY	ROUTE	POST MILES TOTAL PROJECT	SHEET No.	TOTAL SHEETS
12	Ora	91	R1.0, 5.4	126	134

Theresa Gabriel
REGISTERED ELECTRICAL ENGINEER

October 30, 2015
PLANS APPROVAL DATE

REGISTERED PROFESSIONAL ENGINEER
Theresa Aziz Gabriel
No. E15129
Exp. 6-30-16
ELECTRICAL
STATE OF CALIFORNIA

THE STATE OF CALIFORNIA OR ITS OFFICERS OR AGENTS SHALL NOT BE RESPONSIBLE FOR THE ACCURACY OR COMPLETENESS OF SCANNED COPIES OF THIS PLAN SHEET.

TO ACCOMPANY PLANS DATED 02-29-16

NOTE:

Curves represent the minimum footcandle (FC).

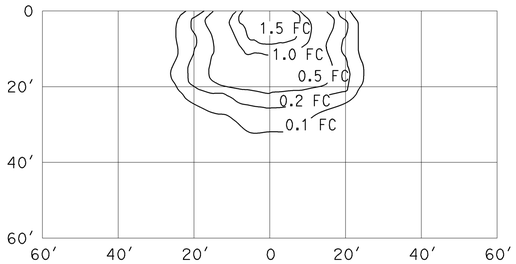

HIGH-PRESSURE SODIUM
WALL-MOUNTED LUMINAIRE 70 W

15′ Mounting Height
ANSI Designation S62
Lamp operated at 5,800 lm

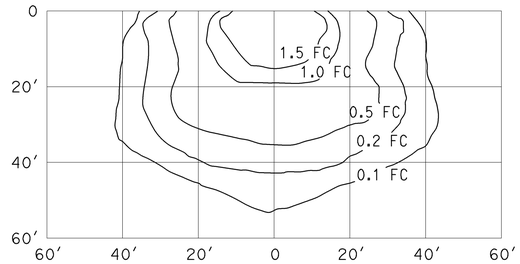

HIGH-PRESSURE SODIUM
WALL-MOUNTED LUMINAIRE 100 W

15′ Mounting Height
ANSI Designation S54
Lamp operated at 9,500 lm

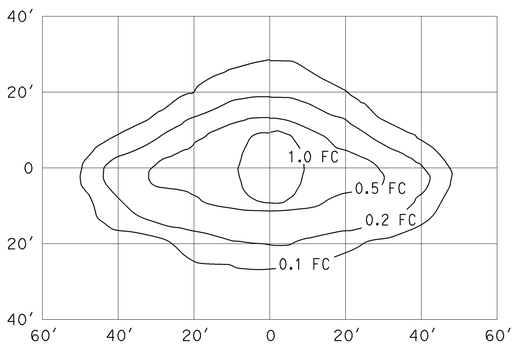

HIGH-PRESSURE SODIUM
PENDANT SOFFIT LUMINAIRE 70 W
TYPE III SHORT

17′ Mounting Height
ANSI Designation S62
Lamp operated at 5,800 lm

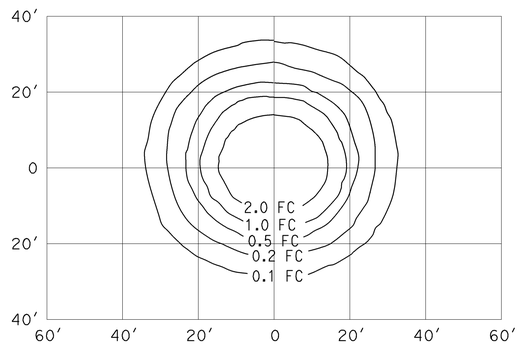

HIGH-PRESSURE SODIUM
PENDANT SOFFIT LUMINAIRE 70 W

17′ Mounting Height
ANSI Designation S62
Lamp operated at 5,800 lm

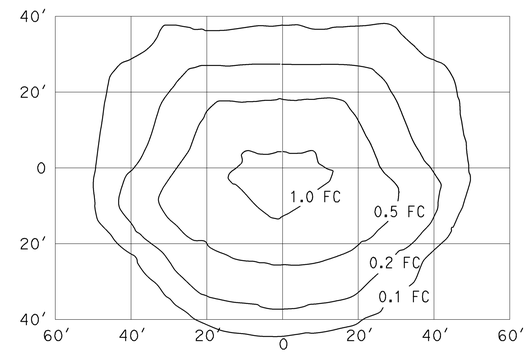

HIGH-PRESSURE SODIUM
FLUSH-MOUNTED SOFFIT LUMINAIRE 70 W

17′ Mounting Height
ANSI Designation S62
Lamp operated at 5,800 lm

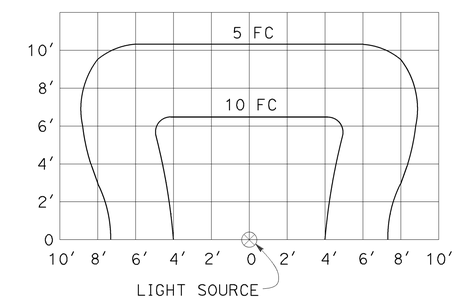

INDUCTION SIGN
LIGHTING FIXTURE 85 W

STATE OF CALIFORNIA
DEPARTMENT OF TRANSPORTATION

ELECTRICAL SYSTEMS (ISOFOOTCANDLE CURVES)

NO SCALE

RSP ES-10B DATED OCTOBER 30, 2015 SUPERSEDES RSP ES-10B DATED JULY 20, 2012 THAT SUPPLEMENTS THE STANDARD PLANS BOOK DATED 2010.

REVISED STANDARD PLAN RSP ES-10B

2010 REVISED STANDARD PLAN RSP ES-10B

Dist	COUNTY	ROUTE	POST MILES TOTAL PROJECT	SHEET No.	TOTAL SHEETS
12	Ora	91	R1.0, 5.4	127	134

REGISTERED CIVIL ENGINEER

July 19, 2013
PLANS APPROVAL DATE

REGISTERED PROFESSIONAL ENGINEER
Stanley P. Johnson
No. C57793
Exp. 3-31-14
CIVIL
STATE OF CALIFORNIA

THE STATE OF CALIFORNIA OR ITS OFFICERS OR AGENTS SHALL NOT BE RESPONSIBLE FOR THE ACCURACY OR COMPLETENESS OF SCANNED COPIES OF THIS PLAN SHEET.

TO ACCOMPANY PLANS DATED 02-29-16

STANDARD TYPE	SETBACK (DIMENSION A)
32	30'-0" (Min)
31	20'-0" (Min)
15, 15D, 15-SB, 21, 21D, 30	ARM LENGTH (Min)

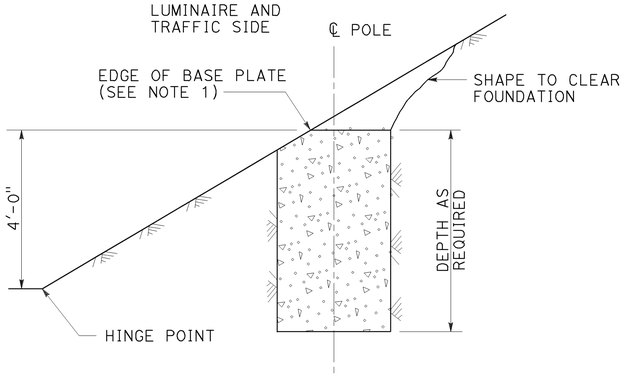

CUT SLOPES
STEEPER THAN 4:1,
LESS THAN 2:1
DETAIL A-1
See Note 2 and 3

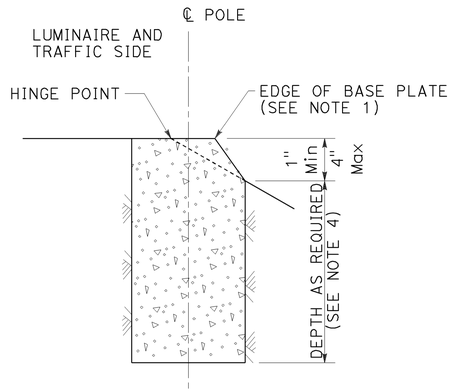

FILL SLOPES
STEEPER THAN 4:1,
LESS THAN 2:1
DETAIL A-2
See Note 2 and 3

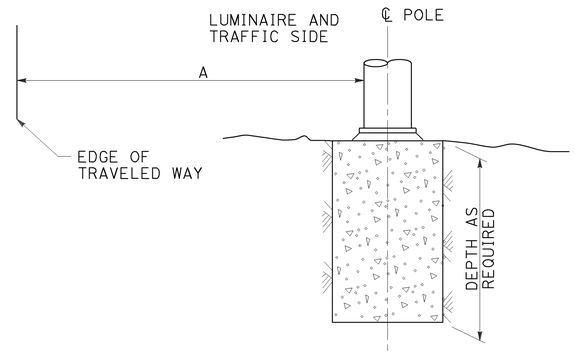

FLAT SECTIONS, CUT OR FILL SLOPES
4:1 OR FLATTER
DETAIL A-3
See Note 2

FOUNDATIONS ADJACENT TO ALL ROADWAYS EXCEPT
IN SIDEWALK, MEDIAN AND ISLAND AREAS
DETAIL A

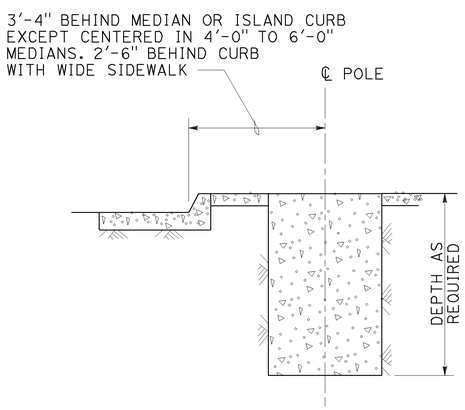

MEDIAN, ISLAND
OR WIDE SIDEWALK
DETAIL B-1
7' Wide and wider

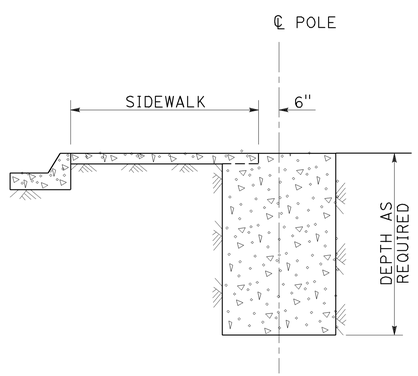

NARROW SIDEWALK
DETAIL B-2
Less than 7' wide

FOUNDATIONS IN SIDEWALK, MEDIAN AND ISLAND AREAS
DETAIL B

NOTES:

1. Where a portion of the foundation is above grade, the top edges shall have a 1" chamfer.
2. Slopes shall be horizontal to vertical ratio (Horizontal : Vertical).
3. Horizontal setbacks on cut and fill slopes steeper than 4:1 shall not exceed the distance shown for flat sections.
4. CIDH embedment depth shall be increased beyond standard depths by the diameter of the CIDH.

STATE OF CALIFORNIA
DEPARTMENT OF TRANSPORTATION

ELECTRICAL SYSTEMS (FOUNDATION INSTALLATIONS)

NO SCALE

RSP ES-11 DATED JULY 19, 2013 SUPERSEDES STANDARD PLAN ES-11
DATED MAY 20, 2011 - PAGE 488 OF THE STANDARD PLANS BOOK DATED 2010.

REVISED STANDARD PLAN RSP ES-11

2010 REVISED STANDARD PLAN RSP ES-11

7-9-13

Dist	COUNTY	ROUTE	POST MILES TOTAL PROJECT	SHEET No.	TOTAL SHEETS
12	Ora	91	R1.0, 5.4	128	134

Theresa Gabriel
REGISTERED ELECTRICAL ENGINEER

October 30, 2015
PLANS APPROVAL DATE

REGISTERED PROFESSIONAL ENGINEER
Theresa Aziz Gabriel
No. E15129
Exp. 6-30-16
ELECTRICAL
STATE OF CALIFORNIA

THE STATE OF CALIFORNIA OR ITS OFFICERS OR AGENTS SHALL NOT BE RESPONSIBLE FOR THE ACCURACY OR COMPLETENESS OF SCANNED COPIES OF THIS PLAN SHEET.

TO ACCOMPANY PLANS DATED 02-29-16

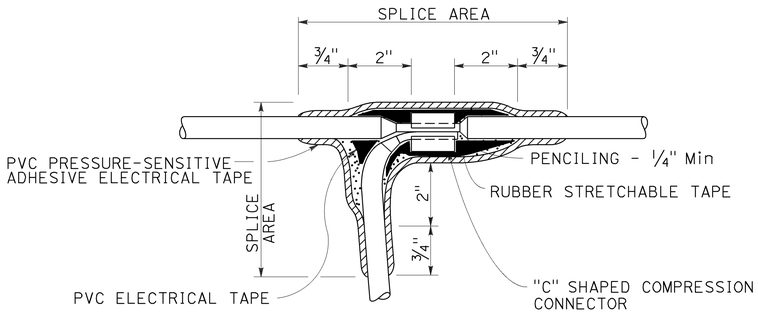

TYPE C SPLICE

See Note 3

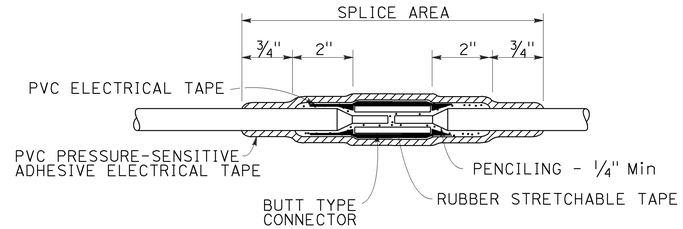

TYPE S SPLICE

See Note 4

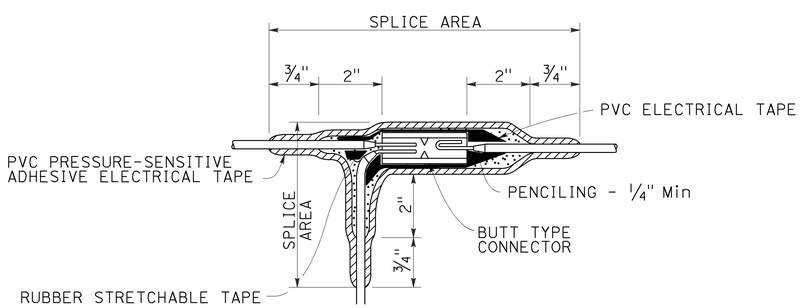

TYPE ST SPLICE

See Note 5

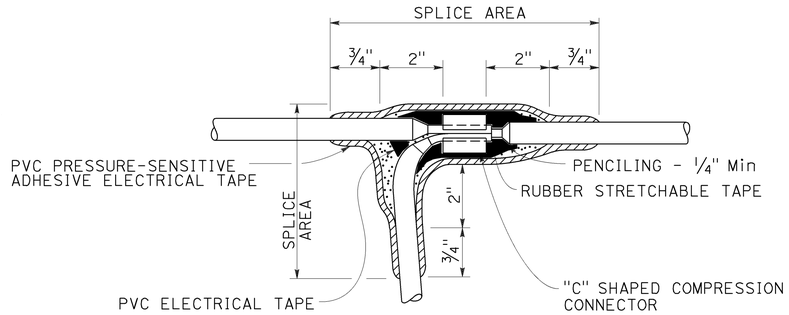

TYPE T SPLICE

See Note 5

NOTES:

1. Dimensions are minimum.
2. Rubber tapes shall be rolled after application.
3. Between 1 free-end and 1 through conductor.
4. Between 2 free-end conductors.
5. Between 3 free-end conductors.

STATE OF CALIFORNIA
DEPARTMENT OF TRANSPORTATION

ELECTRICAL SYSTEMS (SPLICING DETAILS)

NO SCALE

RSP ES-13A DATED OCTOBER 30, 2015 SUPERSEDES STANDARD PLAN ES-13A DATED MAY 20, 2011 - PAGE 491 OF THE STANDARD PLANS BOOK DATED 2010.

REVISED STANDARD PLAN RSP ES-13A

2010 REVISED STANDARD PLAN RSP ES-13A

9-28-15

Dist	COUNTY	ROUTE	POST MILES TOTAL PROJECT	SHEET No.	TOTAL SHEETS
12	Ora	91	R1.0, 5.4	129	134

Theresa Gabriel
REGISTERED ELECTRICAL ENGINEER

October 30, 2015
PLANS APPROVAL DATE

REGISTERED PROFESSIONAL ENGINEER Theresa Aziz Gabriel No. E15129 Exp. 6-30-16 ELECTRICAL STATE OF CALIFORNIA

THE STATE OF CALIFORNIA OR ITS OFFICERS OR AGENTS SHALL NOT BE RESPONSIBLE FOR THE ACCURACY OR COMPLETENESS OF SCANNED COPIES OF THIS PLAN SHEET.

TO ACCOMPANY PLANS DATED 02-29-16

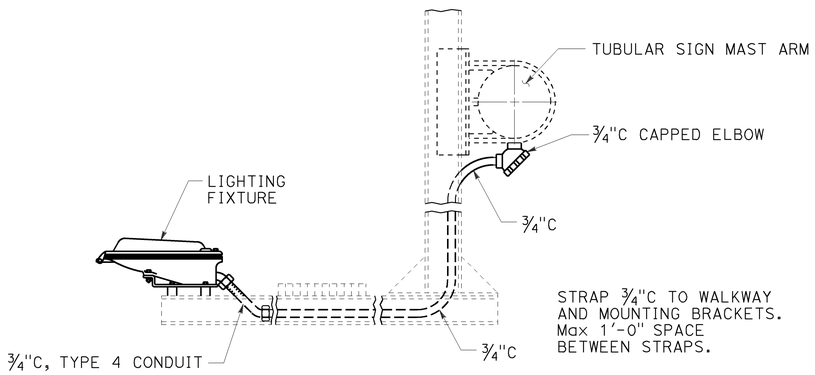

TYPICAL SIGN ILLUMINATION EQUIPMENT INSTALLATION FOR OVERHEAD SIGNS TUBULAR

DETAIL A

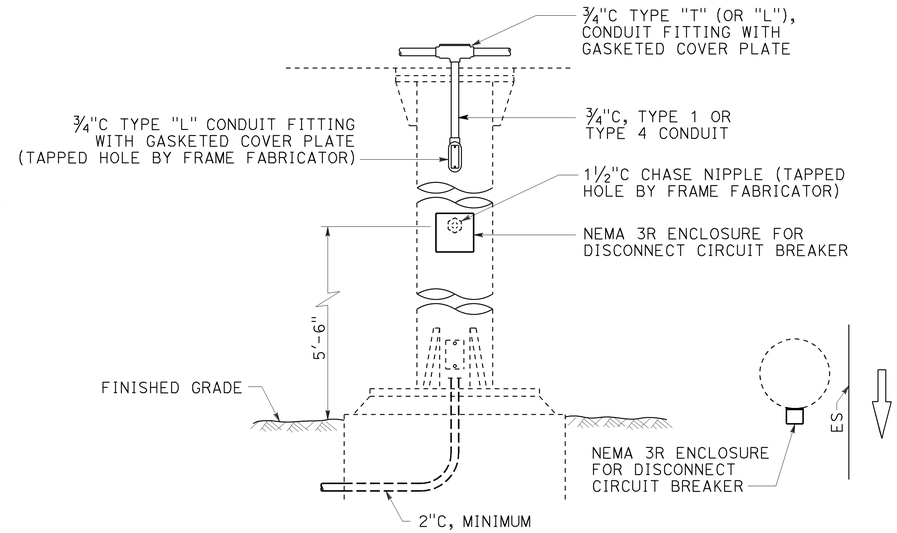

TYPICAL SIGN ILLUMINATION EQUIPMENT INSTALLATION FOR OVERHEAD SIGNS ROUND POST

DETAIL B

NOTES:

1. Type 4 conduit shall be secured to the nearest walkway bracket using one-hole galvanized malleable iron or steel straps and brass machine screws tapped into the bracket.
2. See Overhead Signs Standard Plans for overhead signs and frame juncture details for photoelectric unit installation.
3. Enclosures and straps shall be secured by ⅜" maximum size screws.
4. The Contactor and test switch enclosures shall be readily accessible from the sign walkway.

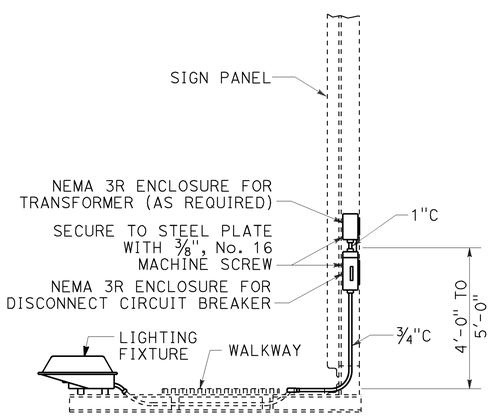

SIDE VIEW

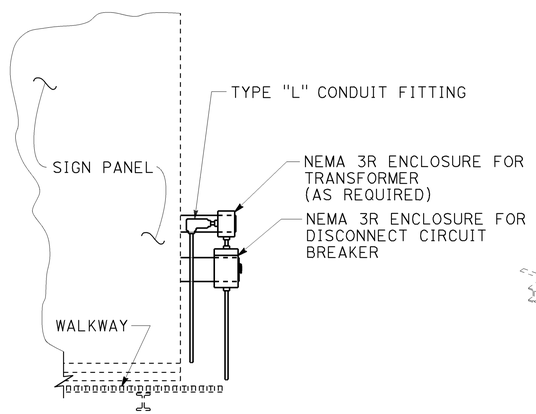

FRONT VIEW

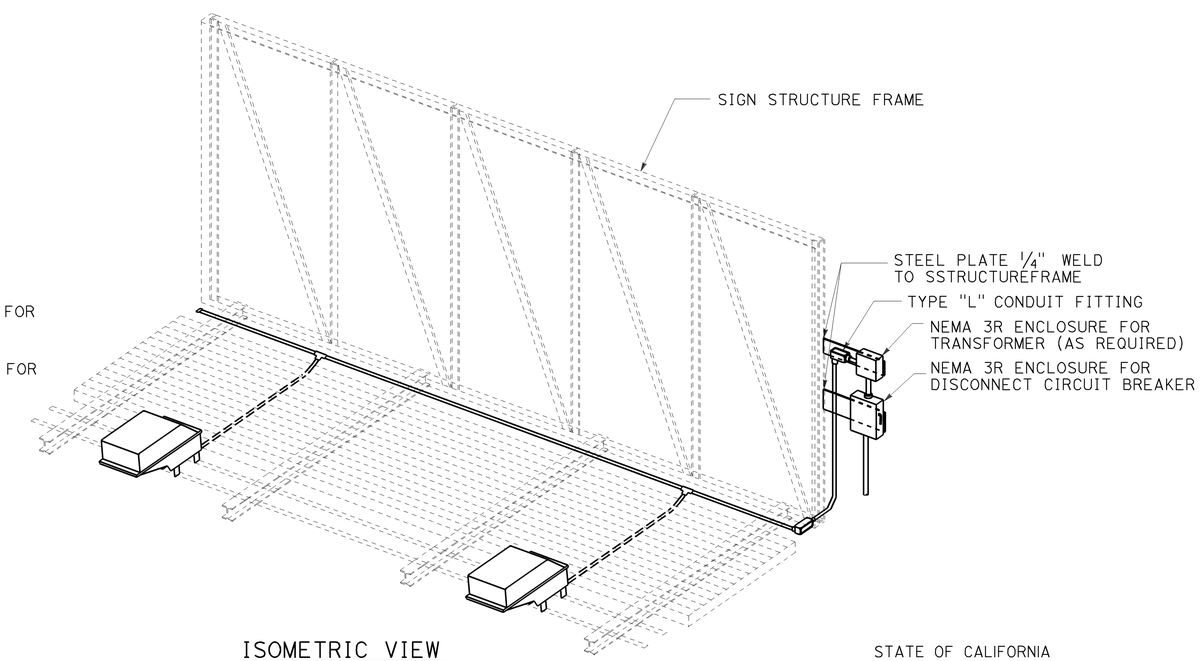

ISOMETRIC VIEW

TYPICAL SIGN ILLUMINATION EQUIPMENT INSTALLATION FOR OVERHEAD SIGNS BRIDGE MOUNTED

DETAIL C

See Note 4

STATE OF CALIFORNIA
DEPARTMENT OF TRANSPORTATION

ELECTRICAL SYSTEMS (SIGN ILLUMINATION EQUIPMENT)

NO SCALE

RSP ES-15C DATED OCTOBER 30, 2015 SUPERSEDES STANDARD PLAN ES-15C DATED MAY 20, 2011 - PAGE 498 OF THE STANDARD PLANS BOOK DATED 2010.

REVISED STANDARD PLAN RSP ES-15C

2010 REVISED STANDARD PLAN RSP ES-15C

8-24-15

Dist	COUNTY	ROUTE	POST MILES TOTAL PROJECT	SHEET No.	TOTAL SHEETS
12	Ora	91	R1.0, 5.4	130	134

Theresa Gabriel
REGISTERED ELECTRICAL ENGINEER

October 30, 2015
PLANS APPROVAL DATE

REGISTERED PROFESSIONAL ENGINEER
Theresa Aziz Gabriel
No. E15129
Exp. 6-30-16
ELECTRICAL
STATE OF CALIFORNIA

THE STATE OF CALIFORNIA OR ITS OFFICERS OR AGENTS SHALL NOT BE RESPONSIBLE FOR THE ACCURACY OR COMPLETENESS OF SCANNED COPIES OF THIS PLAN SHEET.

TO ACCOMPANY PLANS DATED 02-29-16

NOTE:

Type SC1A, SC2A, SC3A controls are similar to Types SC1, SC2 and SC controls respectively except test switch and wiring are not required.

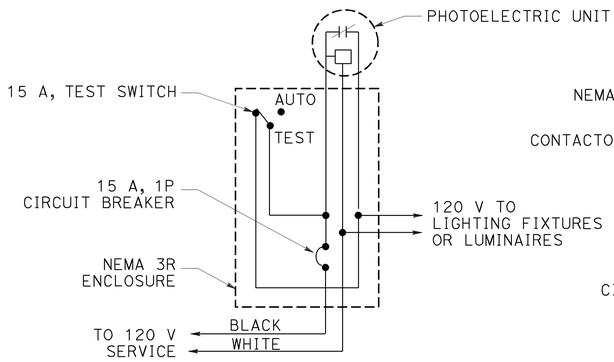

TYPE LC1 CONTROL

For 120 V unswitched circuit with no more than 1000 W load.

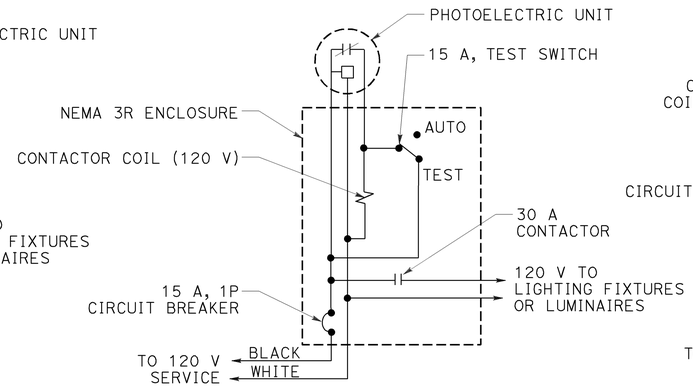

TYPE LC2 CONTROL

For 120 V unswitched circuit

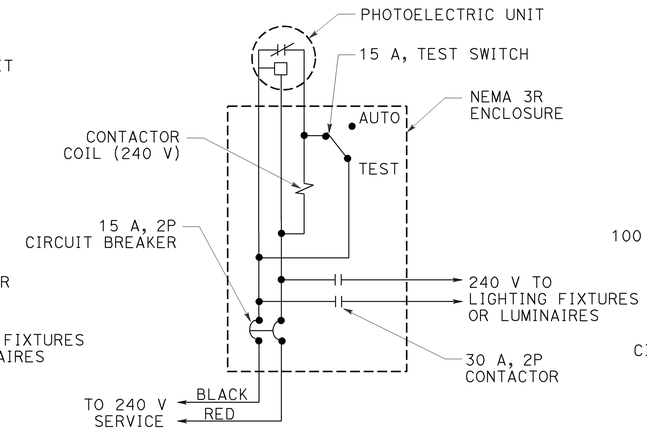

TYPE LC3 CONTROL

For 240 V unswitched circuits

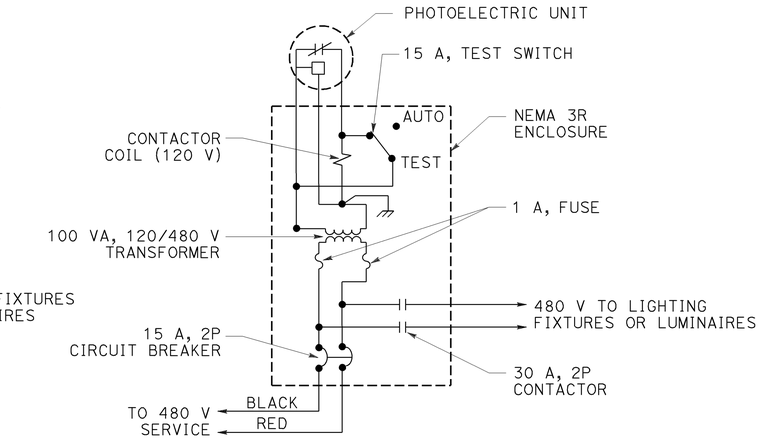

TYPE LC4 CONTROL

For 480 V unswitched circuits

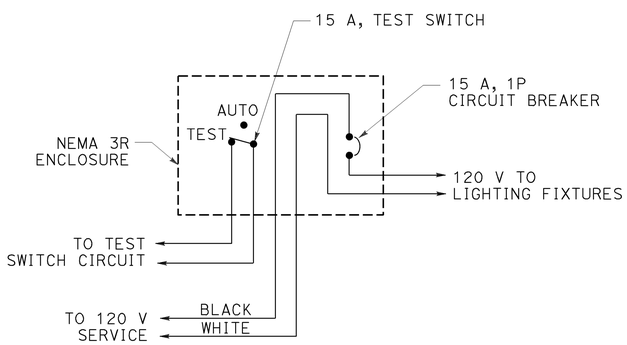

TYPE SC1 CONTROL

For 120 V switched circuit, see Note 1 for Type SC1A

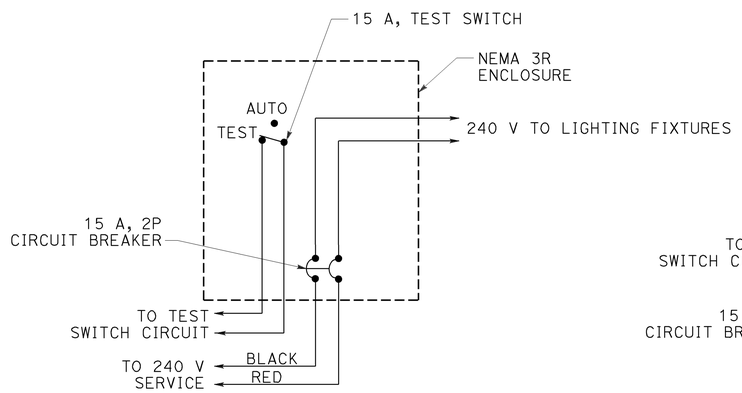

TYPE SC2 CONTROL

For 240 V switched circuit, see Note 1 for Type SC2A

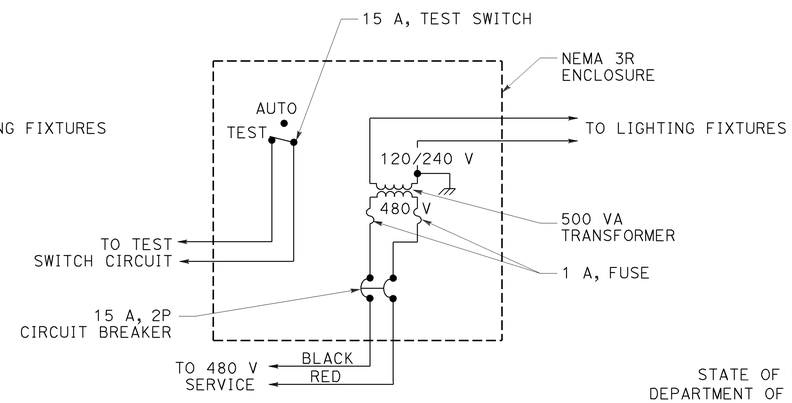

TYPE SC3 CONTROL

For 480 V switched sign circuit, see Note 1 for Type SC3A

STATE OF CALIFORNIA
DEPARTMENT OF TRANSPORTATION

ELECTRICAL SYSTEMS (LIGHTING AND SIGN ILLUMINATION CONTROL)

NO SCALE

RSP ES-15D DATED OCTOBER 30, 2015 SUPERSEDES STANDARD PLAN ES-15D DATED MAY 20, 2011 - PAGE 499 OF THE STANDARD PLANS BOOK DATED 2010.

REVISED STANDARD PLAN RSP ES-15D

2010 REVISED STANDARD PLAN RSP ES-15D

8-20-15

DIST	COUNTY	ROUTE	POST MILES TOTAL PROJECT	SHEET No.	TOTAL SHEETS
12	Ora	91	R1.0,5.4	131	134

REGISTERED CIVIL ENGINEER 1/21/16 DATE

02-29-16
PLANS APPROVAL DATE

The State of California or its officers or agents shall not be responsible for the accuracy or completeness of scanned copies of this plan sheet.

REGISTERED PROFESSIONAL ENGINEER JUAN J. JAUREGUI JR. No. C63939 Exp. 9/30/16 CIVIL STATE OF CALIFORNIA

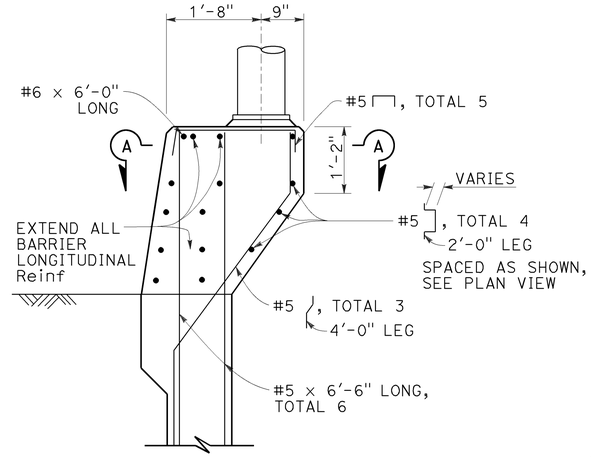

DETAIL A

PEDESTAL DETAIL

ANCHOR BOLT TABLE	
POLE TYPE	ANCHOR BOLT DIAMETER
1-A (Mod)	1"
15	1"
21	1¼"

GENERAL NOTES

SPECIFICATIONS:

DESIGN: AASHTO Standard Specifications for Structural Supports for Highway Signs, Luminaires, and Traffic Signals, Sixth Edition.

LOADING:

Wind Loading (3 second gust) : 100 MPH

UNIT STRESSES:

Structural Steel: fy = 55,000 psi (tapered steel tube)
fy = 50,000 psi (unless otherwise noted)

Anchor bolts: fy = 55,000 psi

Reinforced Concrete : f'c = 3,600 psi
fy = 60,000 psi

NOTES:

1. For pole locations, see "ROADWAY PLANS".
2. All steel must be galvanized after fabrication.
3. During pole erection, the post must be raked as necessary with the use of leveling nuts to provide a plumb pole axis.
4. Reinforcement shown is in addition to Type 736A barrier and retaining wall reinforcement, unless otherwise noted.
5. For Type 1-A (Mod) details see sheet "SES-2".
6. For details not shown, see "2010 STANDARD PLANS" and "2010 REVISED STANDARD PLANS".

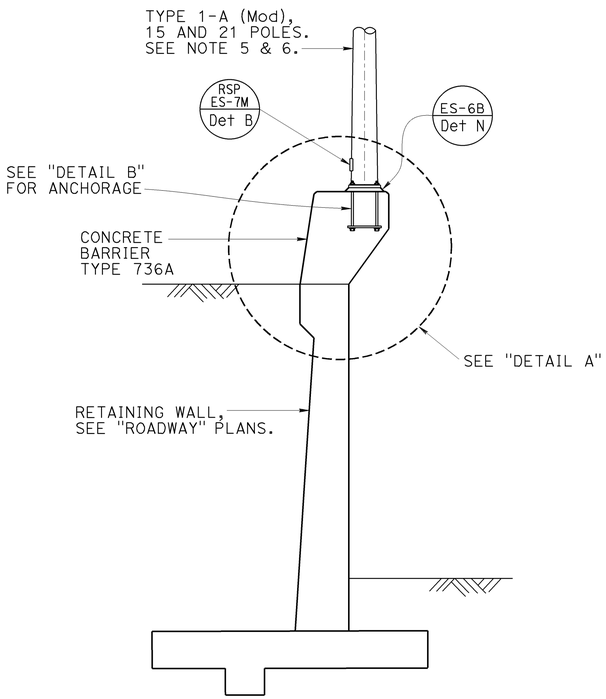

ELEVATION

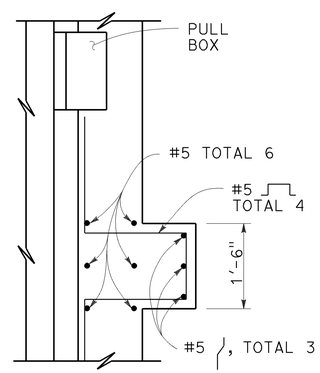

SECTION A-A

PLAN VIEW

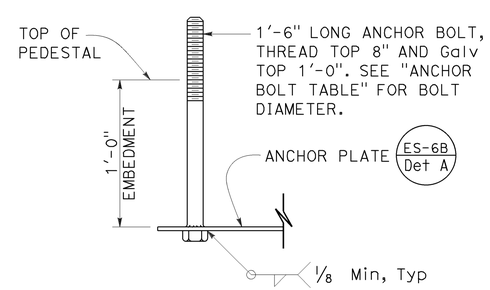

DETAIL B

ANCHORAGE

NOTE:
THE CONTRACTOR MUST VERIFY ALL CONTROLLING FIELD DIMENSIONS BEFORE ORDERING OR FABRICATING ANY MATERIAL.

STANDARD PLAN SHEET No.
DETAIL No.

NO SCALE

BRANCH CHIEF	JEFF WOODY	DESIGN	BY J. JAUREGUI / CHECKED A. GUTIERREZ
		DETAILS	BY M. CLEVERLEY / CHECKED J. JAUREGUI
		QUANTITIES	BY / CHECKED

STATE OF CALIFORNIA
DEPARTMENT OF TRANSPORTATION

DIVISION OF ENGINEERING SERVICES
DESIGN AND TECHNICAL SERVICES
SPECIAL DESIGNS BRANCH A

BRIDGE NO. N/A
POST MILE

PEDESTAL DETAIL FOR TYPE 1-A (Mod) TYPE 15 AND 21 POLES ON CONCRETE BARRIER TYPE 736A

SES-1

(ENGLISH) SPECIAL DESIGNS BRANCH BORDER SHEET (REV. 7-1-09)

ORIGINAL SCALE IN INCHES FOR REDUCED PLANS 0 1 2 3

UNIT: 3619
PROJECT NUMBER & PHASE: 1214000004-1
CONTRACT NO.: 12-0N3604

DISREGARD PRINTS BEARING EARLIER REVISION DATES → 12/17/15 1/21/16 11/17/15 12/2/15

SHEET OF

FILE => spec_des_br_prj/2015sd/12-0N3601/12-0n3601_ses-1.dgn

USERNAME => s114937 DATE PLOTTED => 21-JAN-2016 TIME PLOTTED => 08:44

DIST	COUNTY	ROUTE	POST MILES TOTAL PROJECT	SHEET No.	TOTAL SHEETS
12	Ora	91	R1.0,5.4	132	134

REGISTERED CIVIL ENGINEER — DATE 1/21/16

02-29-16
PLANS APPROVAL DATE

The State of California or its officers or agents shall not be responsible for the accuracy or completeness of scanned copies of this plan sheet.

REGISTERED PROFESSIONAL ENGINEER — JUAN J. JAUREGUI JR. — No. C63939 — Exp. 9/30/16 — CIVIL — STATE OF CALIFORNIA

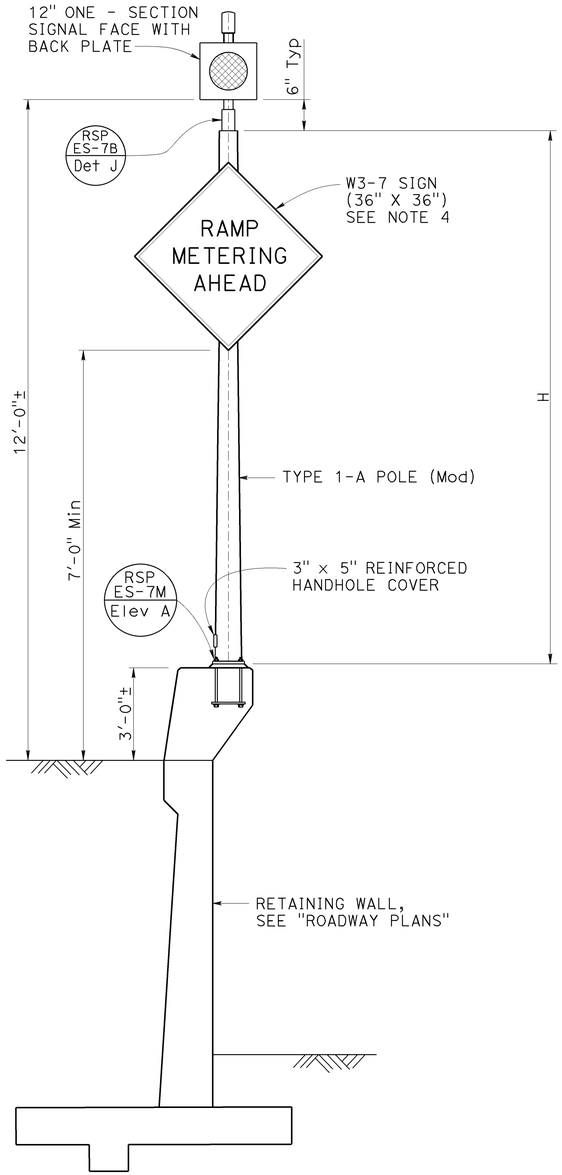

FRONT VIEW

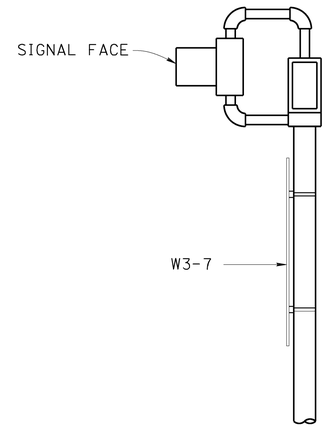

SIDE VIEW

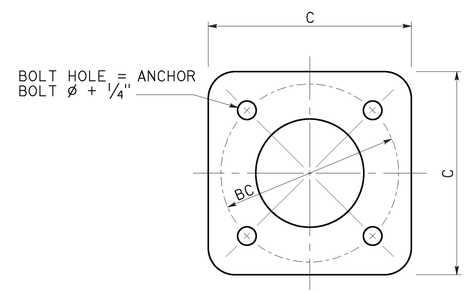

BASE PLATE

GENERAL NOTES

SPECIFICATIONS:

DESIGN: AASHTO Standard Specifications for Structural Supports for Highway Signs, Luminaires, and Traffic Signals, Sixth Edition.

LOADING:

Wind Loading (3 second gust) : 100 MPH

UNIT STRESSES:

Structural Steel: fy = 55,000 psi (tapered steel tube)
fy = 50,000 psi (unless otherwise noted)

Anchor bolts: fy = 55,000 psi

Reinforced Concrete : f'c = 3,600 psi
fy = 60,000 psi

NOTES:

1. For pole locations, see "ROADWAY PLANS".
2. All steel must be galvanized after fabrication.
3. During pole erection, the post must be raked as necessary with the use of leveling nuts to provide a plumb pole axis.
4. W3-7 Sign, unless otherwise noted, must be mounted to pole with stainless steel straps or other method without drilling holes in pole.
5. For Pedestal Details, see sheet "SES-1".
6. For details not shown, see "2010 STANDARD PLANS" and "2010 REVISED STANDARD PLANS".

TABLE A

POLE TYPE	POLE DATA				BASE PLATE DATA			
	H HEIGHT	Min OD BASE	Min OD TOP	THICKNESS	C	BC = BOLT CIRCLE	THICKNESS	ANCHOR BOLTS SIZE
1-A (MODIFIED)	8'-6"	5 1/4"	4"	0.1196"	9 1/2"	8 1/2"	3/4"	1" ø x 1'-6"

NOTE:
THE CONTRACTOR MUST VERIFY ALL CONTROLLING FIELD DIMENSIONS BEFORE ORDERING OR FABRICATING ANY MATERIAL.

STANDARD PLAN SHEET No.
DETAIL No.

NO SCALE

BRANCH CHIEF **JEFF WOODY**

	BY	CHECKED
DESIGN	J. JAUREGUI	A. GUTIERREZ
DETAILS	M. CLEVERLEY	J. JAUREGUI
QUANTITIES		

STATE OF **CALIFORNIA** DEPARTMENT OF TRANSPORTATION

DIVISION OF ENGINEERING SERVICES DESIGN AND TECHNICAL SERVICES
SPECIAL DESIGNS BRANCH **A**

BRIDGE NO. N/A
POST MILE Var

RAMP METER FLASHING BEACON ON CONCRETE BARRIER
TYPE 1-A (Mod) POLE DETAILS

SES-2

(ENGLISH) SPECIAL DESIGNS BRANCH BORDER SHEET (REV. 7-1-09)

ORIGINAL SCALE IN INCHES FOR REDUCED PLANS 0 1 2 3

UNIT: 3619
PROJECT NUMBER & PHASE: 1214000004-1
CONTRACT NO.: 12-0N3604

DISREGARD PRINTS BEARING EARLIER REVISION DATES — REVISION DATES 12/2/15 1/21/16 — SHEET — OF

FILE => spec_des_br_prj/2015sd/12-0N3601/12-0n3601_ses-2.dgn

USERNAME => s114937 DATE PLOTTED => 21-JAN-2016 TIME PLOTTED => 08:44

DIST	COUNTY	ROUTE	POST MILES TOTAL PROJECT	SHEET No.	TOTAL SHEETS
12	Org	91	R1.0/5.4	133	134

REGISTERED CIVIL ENGINEER 1/21/16 DATE

02-29-16
PLANS APPROVAL DATE

REGISTERED PROFESSIONAL ENGINEER JOEL MAGANA No. C61500 Exp. 6/30/17 CIVIL STATE OF CALIFORNIA

The State of California or its officers or agents shall not be responsible for the accuracy or completeness of electronic copies of this plan sheet.

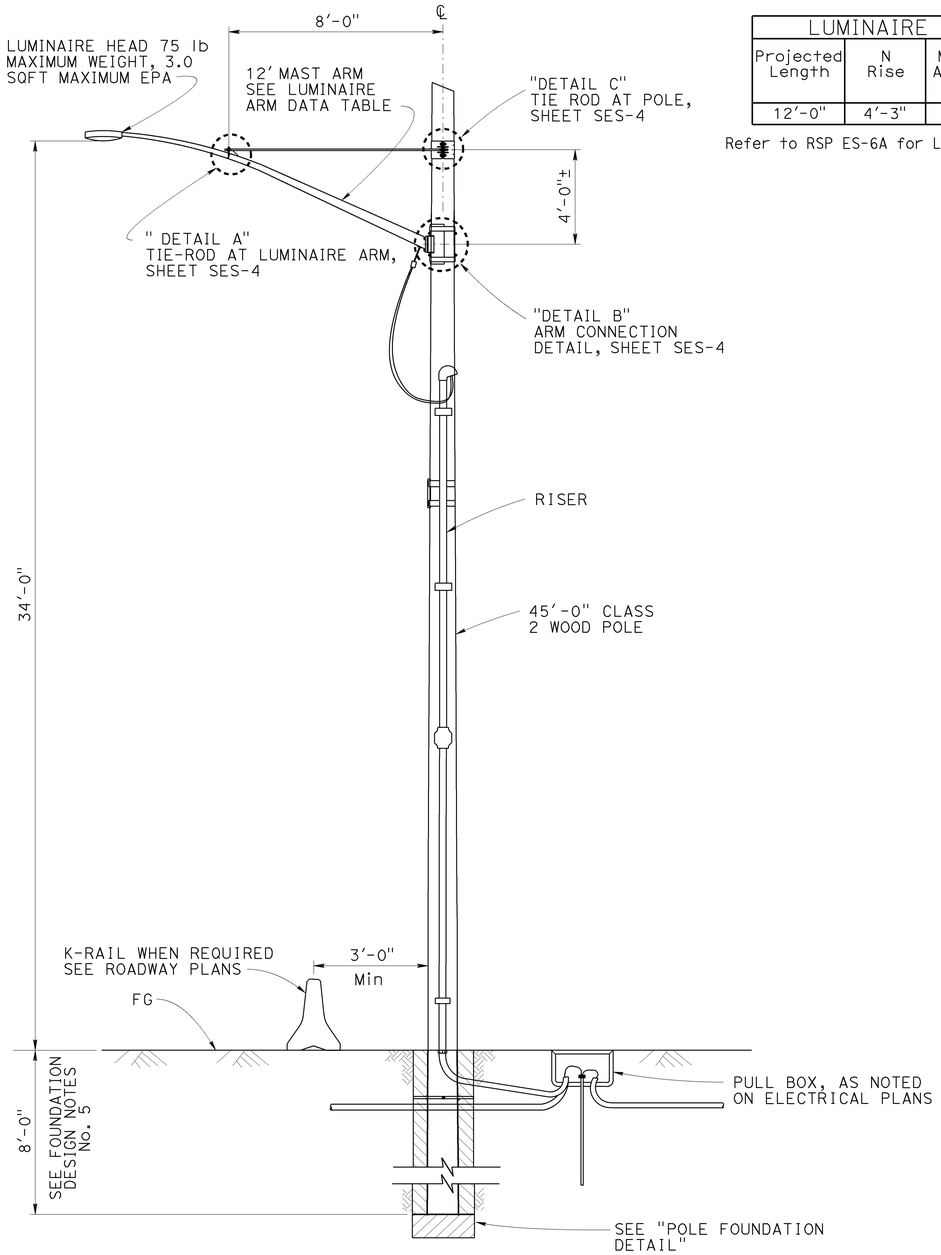

TYPICAL WOOD POLE WITH OH CONDUCTORS AND OPTIONAL ATTACHMENTS

NO SCALE

LUMINAIRE ARM DATA			
Projected Length	N Rise	Min OD At Pole	Thickness
12'-0"	4'-3"	3 7/8"	0.1196"

Refer to RSP ES-6A for Luminaire arm details

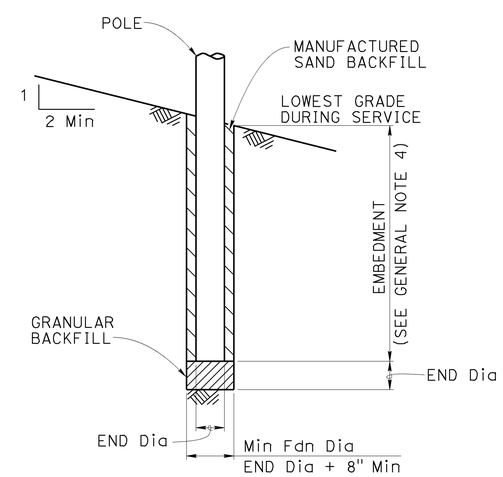

POLE FOUNDATION DETAIL

Design: AASHTO Standard Specifications for Structural Supports for Highway Signs, Luminaires and Traffic Signals, Fifth Edition (LTS-5).

GROUP LOAD COMBINATIONS:

I Dead Load
II Dead Load + Wind Load
III Dead Load + 0.5 (Wind Load) + Ice Load
IV Fatigue: Not used

LOADING:

Wind Loading: 100 mph (3-second gust)
Wind Recurrence Interval: 10 years
Combined height, exposure, and elevated terrain factor = 1.05 (Exposure C, structure is not located on or over the top half of a ridge, hill, or escarpment)

Ice Loading: 3.0 psf on surfaces, 0.60 in radial thickness of ice at a unit weight of 60 pcf on overhead bundles

BASIC DESIGN VALUES:

Timber Poles: Fb = 1850 psi
Fv = 110 psi
Fcp = 230 psi
Fc = 950 psi
E = 1500 x 10^3 psi

DESIGN WIRE BREAKING STRENGTHS:

ASTM A475, Utilities Grade, 7 strand modified by termination efficiency factor of 0.8

FOUNDATION DESIGN NOTES:

1. Pole embedment depth design is based on Broms' approximate procedure as described in Article 13.6 of AASHTO LTS-5.
2. Embedment depth is calculated based on following soil parameters,
   Cohesive Soil:
   Shear strength of soil c = 1500 psf.
   Cohesionless Soil:
   ø = 30 deg, γ = 120 pcf.
   Soil assumed to be unsaturated.
3. An overload factor of 2.0 and an undercapacity factor of 0.7 were used for safety factor of 2.86.
4. Allowable vertical bearing pressure at the end bearing of poles is 3000 psf at 6 feet or more embedment.
5. Add 2'-0" for slopes above 1V:4H

BRANCH CHIEF DAVID A. NEUMANN

	BY	CHECKED
DESIGN	NATHAN QUIROZ	JOEL MAGANA
DETAILS	BOB EDWARDS	JOEL MAGANA
QUANTITIES	X	X

STATE OF CALIFORNIA
DEPARTMENT OF TRANSPORTATION

DIVISION OF ENGINEERING SERVICES
STRUCTURE DESIGN
SPECIAL DESIGN BRANCH

BRIDGE NO. N/A
POST MILE N/A

TEMPORARY WOOD POLES
LIGHTING

SES-3

STRUCTURES DESIGN SPECIAL DESIGN SHEET (ENGLISH) (REV. 09-01-10)

ORIGINAL SCALE IN INCHES FOR REDUCED PLANS 0 1 2 3

UNIT: 3619
PROJECT NUMBER & PHASE: 1214000004-1 CONTRACT NO.: 12-0N3604

DISREGARD PRINTS BEARING EARLIER REVISION DATES

REVISION DATES 12-11-15 1-22-16

SHEET 3 OF 4

FILE => 12-0n3601-uh-misc-ses-dt03.dgn

USERNAME => s136236 DATE PLOTTED => 28-JAN-2016 TIME PLOTTED => 11:28

DIST	COUNTY	ROUTE	POST MILES TOTAL PROJECT	SHEET No.	TOTAL SHEETS
12	Ora	91	R1.0/5.4	134	134

REGISTERED CIVIL ENGINEER 1/21/16 DATE

02-29-16
PLANS APPROVAL DATE

REGISTERED PROFESSIONAL ENGINEER JOEL MAGAÑA No. C61500 Exp. 6/30/17 CIVIL STATE OF CALIFORNIA

The State of California or its officers or agents shall not be responsible for the accuracy or completeness of electronic copies of this plan sheet.

NOTES:

1. Luminaire mast arms must be in compliance with Standard Plan ES-60 with noted modifications.
2. Verify pole dimensions at tie-rod attachment height. Fabricate 8" flat bar with "L" Dimension to maintain an open gap between flanges in finished installation..
3. Not all screw heads and bolt heads are shown for clarity.
4. Mast arm not shown for clarity.

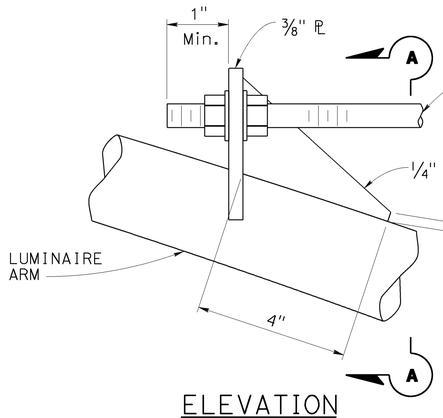

ELEVATION

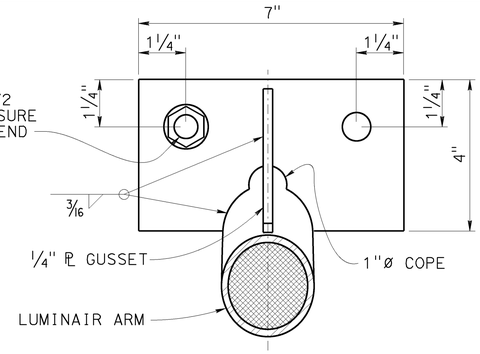

VIEW A-A

DETAIL A
TIE-ROD AT LUMINAIRE ARM

NO SCALE

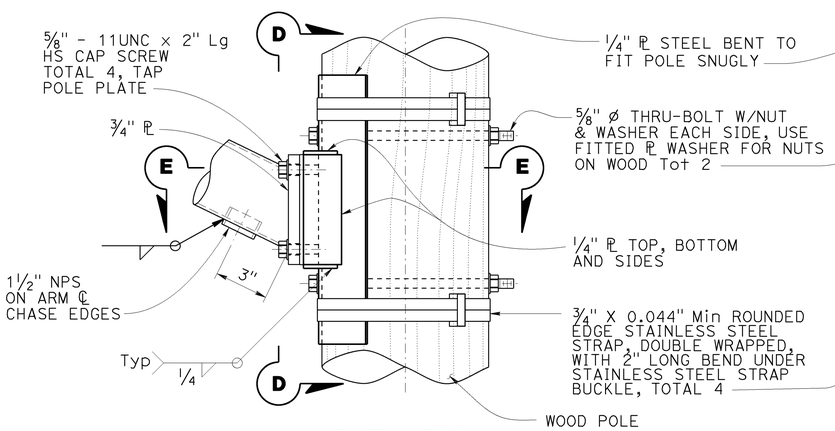

ELEVATION

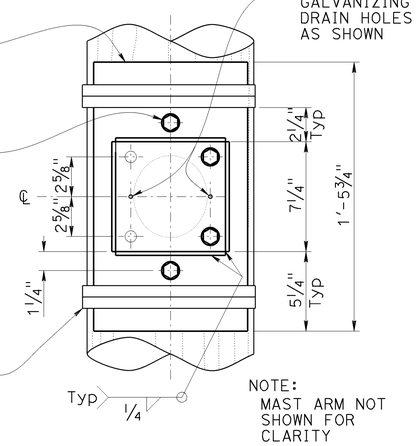

VIEW D-D

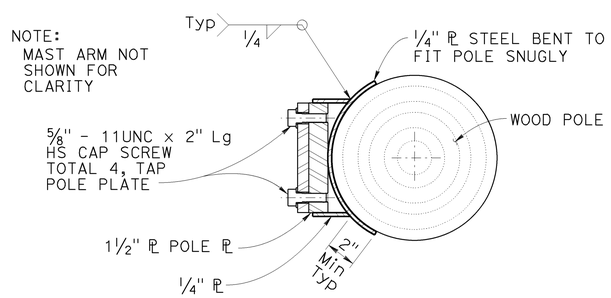

SECTION E-E

DETAIL B
ARM CONNECTION DETAILS

NO SCALE

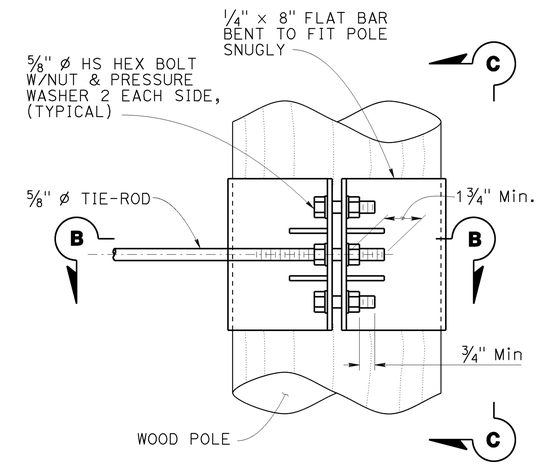

ELEVATION

NOTE:
Not all screw and bolt heads shown for clarity.

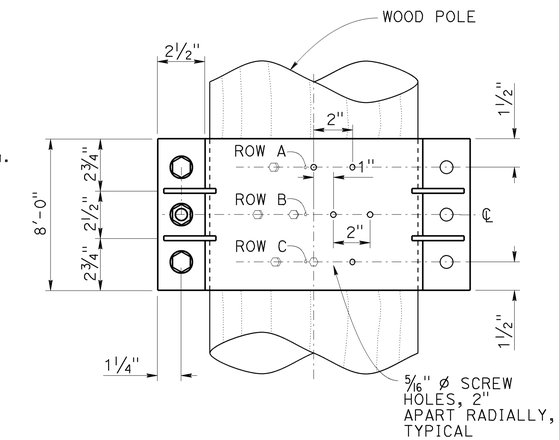

VIEW C-C

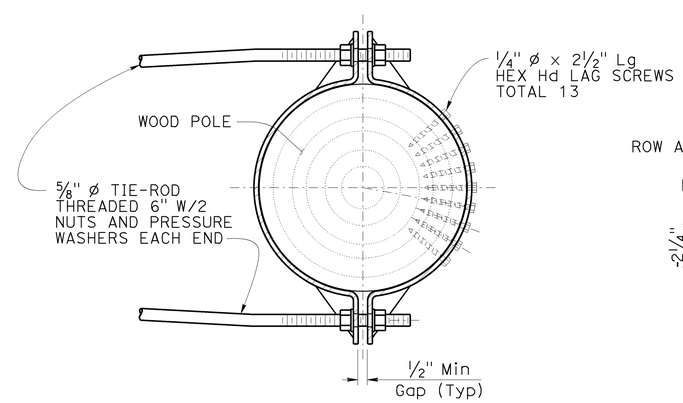

SECTION B-B

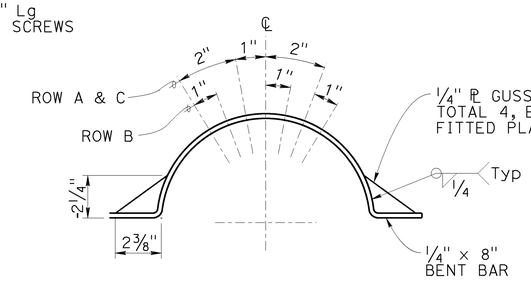

LAG SCREW AND GUSSET PLATE LAYOUT

DETAIL C
TIE-ROD AT POLE

NO SCALE

BRANCH CHIEF	DESIGN	BY NATHAN QUIROZ	CHECKED JOEL MAGANA
DAVID A. NEUMANN	DETAILS	BY BOB EDWARDS	CHECKED JOEL MAGANA
	QUANTITIES	BY X	CHECKED X

STATE OF CALIFORNIA
DEPARTMENT OF TRANSPORTATION

DIVISION OF ENGINEERING SERVICES
STRUCTURE DESIGN
SPECIAL DESIGN BRANCH

BRIDGE NO. N/A
POST MILE N/A

TEMPORARY WOOD POLES
MISCELLANEOUS DETAILS

SES-4

STRUCTURES DESIGN SPECIAL DESIGN SHEET (ENGLISH) (REV. 09-01-10)

ORIGINAL SCALE IN INCHES FOR REDUCED PLANS 0 1 2 3

UNIT: 3619
PROJECT NUMBER & PHASE: 1214000004-1
CONTRACT NO.: 12-0N3604

DISREGARD PRINTS BEARING EARLIER REVISION DATES

REVISION DATES 12-11-15 1-22-16

SHEET 4 OF 4

FILE => 12-0n3601-uh-misc-ses-dt04.dgn

USERNAME => s136236 DATE PLOTTED => 28-JAN-2016 TIME PLOTTED => 11:29