Dist	COUNTY	ROUTE	POST MILES TOTAL PROJECT	SHEET No.	TOTAL SHEETS
12	Ora	Var		1	91

STATE OF CALIFORNIA
DEPARTMENT OF TRANSPORTATION

ACNHP-X059(068)E

PROJECT PLANS FOR TRANSPORTATION MANAGEMENT CENTER

IN ORANGE COUNTY
IN IRVINE

TO BE SUPPLEMENTED BY STANDARD PLANS DATED 2010

INDEX OF PLANS

SHEET No.	DESCRIPTION
1	TITLE AND LOCATION MAP
	ELECTRICAL PLANS
2	KEY MAP AND LOCATION INDEX
3-5	GENERAL NOTES, ABBREVIATIONS, AND LEGEND
6	TEMPORARY AUDIO VISUAL SYSTEM
7-12	AUDIO VISUAL SYSTEM
13-72	ELECTRICAL DETAILS
73-79	ELECTRICAL QUANTITIES
80-83	REVISED STANDARD PLANS
STRUCTURAL PLANS	
84-91	STRUCTURAL WALL PLANS

THE STANDARD PLAN LIST APPLICABLE TO THIS CONTRACT IS INCLUDED IN THE NOTICE TO BIDDERS AND SPECIAL PROVISIONS BOOK.

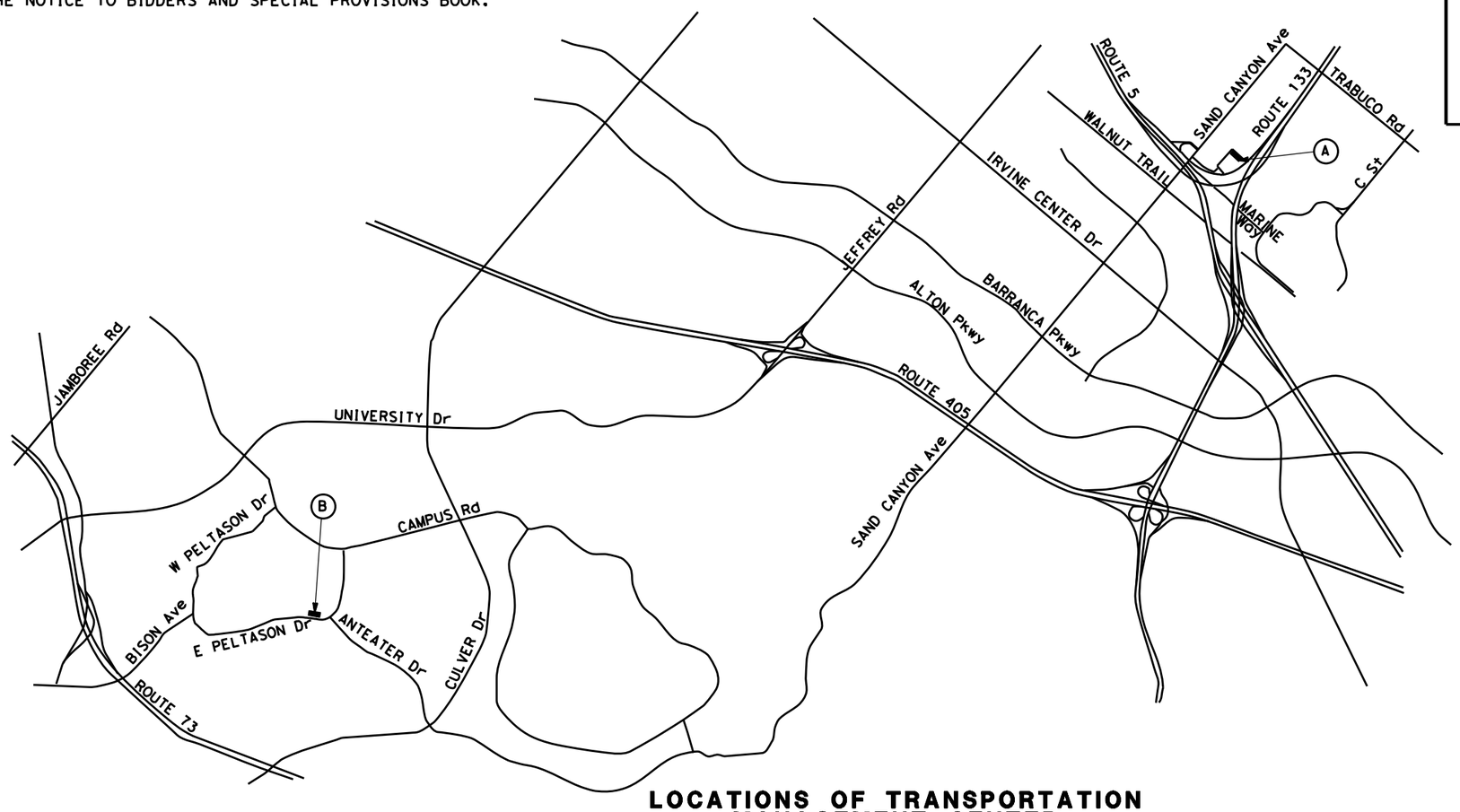

LOCATIONS OF TRANSPORTATION MANAGEMENT CENTER

Loc No. ⊛	DESCRIPTION	ADDRESS
A	CALTRANS DISTRICT 12 TMC	6681 MARINE WAY, IRVINE, CA 92618
B	UNIVERSITY OF CALIFORNIA, IRVINE	4000 ANTEATER INSTRUCTION AND RESEARCH Bldg (AIRB)

NO SCALE

THE CONTRACTOR SHALL POSSESS THE CLASS (OR CLASSES) OF LICENSE AS SPECIFIED IN THE "NOTICE TO BIDDERS."

APPROVED AS TO IMPACT ON STATE FACILITIES AND CONFORMANCE WITH APPLICABLE STATE STANDARDS AND PRACTICES AND THAT TECHNICAL OVERSIGHT WAS PERFORMED.

CONSULTANT DESIGN MANAGER: STEVE HUFF
CALTRANS DESIGN OVERSIGHT APPROVAL: ABDOL GHARAVI
REGISTRATION No.: 13022
LICENSE Exp DATE: 06-30-15
DATE SIGNED: 2-25-15

PROJECT ENGINEER REGISTERED CIVIL ENGINEER — DATE: 2-25-15

REGISTERED PROFESSIONAL ENGINEER — CARLOS ORTIZ — No. 57535 — Exp. 12-31-15 — CIVIL — STATE OF CALIFORNIA

May 04, 2015
PLANS APPROVAL DATE

THE STATE OF CALIFORNIA OR ITS OFFICERS OR AGENTS SHALL NOT BE RESPONSIBLE FOR THE ACCURACY OR COMPLETENESS OF SCANNED COPIES OF THIS PLAN SHEET.

RBF CONSULTING
14725 ALTON PKWY
IRVINE, CA 92618

CONTRACT No.	12-0N2204
PROJECT ID	1213000182

LAST REVISION 04-01-15 — DATE PLOTTED => $DATE — TIME PLOTTED => $TIME

Dist	COUNTY	LOCATION	POST MILES TOTAL PROJECT	SHEET No.	TOTAL SHEETS
12	Ora	Var		2	91

REGISTERED CIVIL ENGINEER — DATE 2-25-15

May 04, 2015
PLANS APPROVAL DATE

REGISTERED PROFESSIONAL ENGINEER — CARLOS ORTIZ — No. 57535 — Exp. 12-31-15 — CIVIL — STATE OF CALIFORNIA

THE STATE OF CALIFORNIA OR ITS OFFICERS OR AGENTS SHALL NOT BE RESPONSIBLE FOR THE ACCURACY OR COMPLETENESS OF SCANNED COPIES OF THIS PLAN SHEET.

RBF CONSULTING
14725 ALTON PKWY
IRVINE, CA 92618

UCI AIRB TRANSPORTATION STUDIES

LOCATION B1

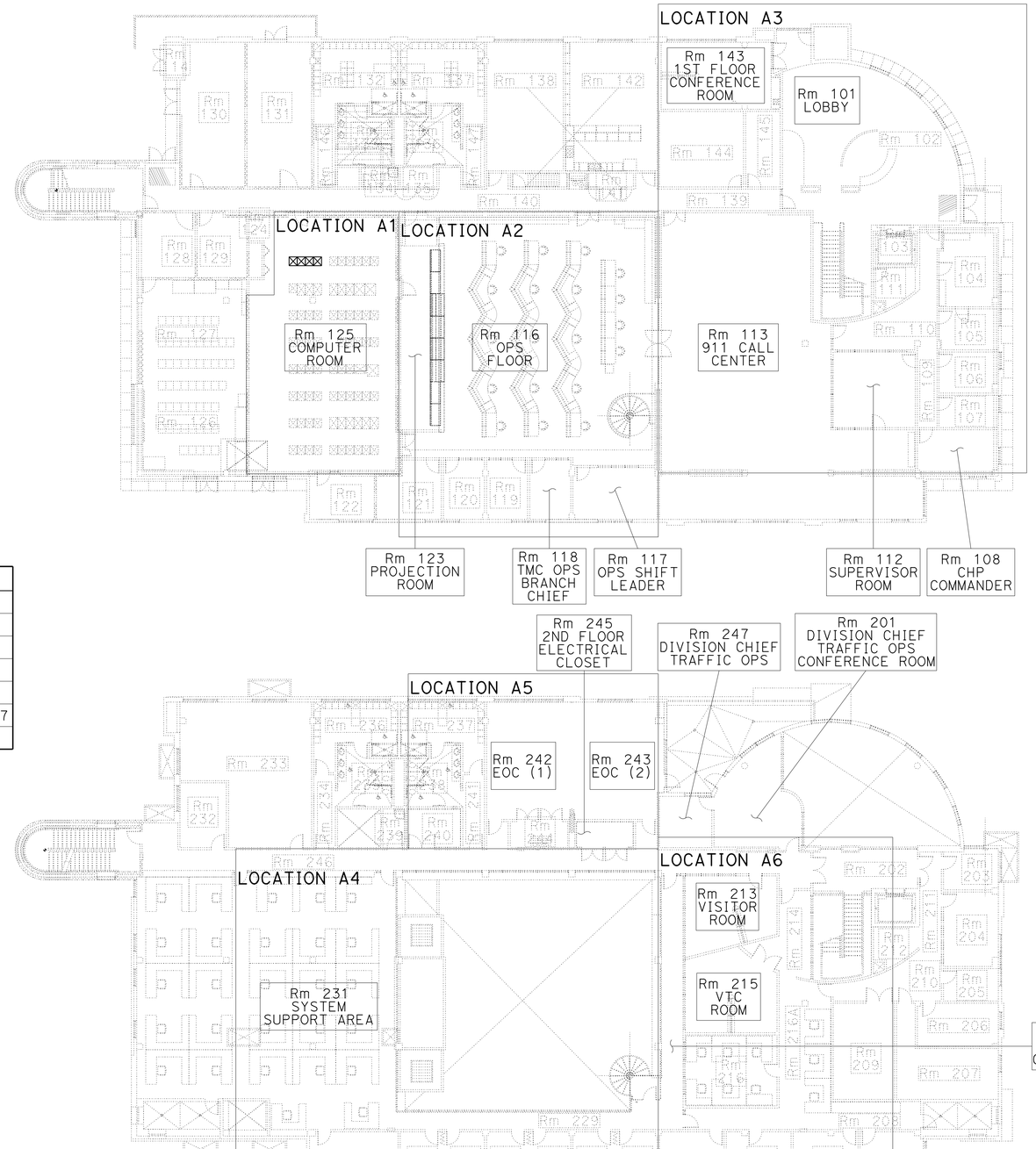

FIRST FLOOR

SECOND FLOOR

LOCATIONS OF TRANSPORTATION MANAGEMENT CENTER

Loc No. (#)	DESCRIPTION
A1	Rm 125
A2	Rm 116, Rm 117, Rm 118, Rm 123
A3	Rm 101, Rm 108, Rm 112, Rm 113, Rm 143
A4	Rm 227, Rm 228, Rm 231
A5	Rm 242, Rm 243, Rm 245
A6	Rm 201, Rm 213, Rm 215, Rm 217, Rm 220, Rm 230, Rm 247
B1	UCI AIRB BUILDING

KEY MAP AND LOCATION INDEX

NO SCALE

APPROVED FOR ELECTRICAL WORK ONLY

E-1

STATE OF CALIFORNIA - DEPARTMENT OF TRANSPORTATION — Caltrans

CONSULTANT FUNCTIONAL SUPERVISOR: STEVE HUFF

CALCULATED-DESIGNED BY: JOSHUA MCNEILL — CHECKED BY: RANDY RATZLAFF

REVISED BY — DATE REVISED

LAST REVISION 04-01-15 — DATE PLOTTED => 13-MAY-2015 — TIME PLOTTED => 08:48

Dist	COUNTY	LOCATION	POST MILES TOTAL PROJECT	SHEET No.	TOTAL SHEETS
12	Ora	Var		3	91

REGISTERED CIVIL ENGINEER 2-25-15 DATE

May 04, 2015
PLANS APPROVAL DATE

REGISTERED PROFESSIONAL ENGINEER CARLOS ORTIZ No. 57535 Exp. 12-31-15 CIVIL STATE OF CALIFORNIA

THE STATE OF CALIFORNIA OR ITS OFFICERS OR AGENTS SHALL NOT BE RESPONSIBLE FOR THE ACCURACY OR COMPLETENESS OF SCANNED COPIES OF THIS PLAN SHEET.

RBF CONSULTING
14725 ALTON PKWY
IRVINE, CA 92618

INSTALLATION NOTES:

1. YOU MUST PROVIDE, LOCATE AND INSTALL ALL AV SYSTEMS CONDUIT, CABLE PULLS, CABLE TRAYS, CABLE TERMINATORS, BUSHINGS, J-BOXES, FLOOR BOXES, ENCLOSURES, PLATES AND PANELS, POWER CIRCUITS, POWER CABLE, POWER CONNECTIONS, ETC. DESCRIBED IN THESE DOCUMENTS.
2. YOU ARE RESPONSIBLE FOR ADHERING TO ALL NATIONAL AND LOCAL ELECTRICAL, FIRE AND BUILDING CODE REQUIREMENTS.
3. ALL AV SYSTEMS EQUIPMENT MUST BE PROVIDED WITH STANDARD MANUFACTURER'S COLOR AND FINISH UNLESS OTHERWISE SPECIFIED PRIOR TO INSTALLATION.
4. ALL AV SYSTEMS DEVICE MOUNTING ATTACHMENTS MUST BE INSTALLED TO PROVIDE EASE OF MAINTENANCE AND SERVICE. STAINLESS STEEL SAFETY CABLES SHALL BE INSTALLED ON ALL SUSPENDED EQUIPMENT.
5. YOU MUST PROVIDE STRUCTURAL SUPPORT FOR MOUNTING OF AUDIO VISUAL EQUIPMENT AT LOCATIONS DESIGNATED IN THESE DRAWINGS. THIS MUST INCLUDE, BUT NOT BE LIMITED TO, BLOCKING FOR WALL MOUNTED DEVICES AND OVERHEAD SUPPORT FOR CEILING MOUNTED PROJECTORS & PROJECTION SCREENS. YOU MUST ALSO SUPPORT ALL AV SYSTEMS LOUDSPEAKER ENCLOSURE ASSEMBLIES FROM STRUCTURE RATHER THAN FROM THE FACILITY FINISHED CEILING, PROVIDING SAFETY CABLES TO STRUCTURAL STEEL AND SEISMICALLY BRACE EQUIPMENT AS REQUIRED.
6. YOU MUST PROVIDE A MINIMUM OF 36" UNOBSTRUCTED ACCESS FROM THE FRONT AND REAR OF ALL FREE STANDING AV SYSTEMS RACK ASSEMBLIES, UNLESS OTHERWISE NOTED.
7. YOU MUST PROVIDE A MINIMUM OF 36" UNOBSTRUCTED ACCESS FROM THE FRONT OF ALL WALLS MOUNTED AV SYSTEMS RACK ASSEMBLIES, UNLESS OTHERWISE NOTED.
8. YOU MUST PROVIDE A MINIMUM OF 12" UNOBSTRUCTED ACCESS FROM THE TOP OF ALL AV SYSTEMS RACK ASSEMBLIES TO THE BOTTOM OF ALL OVERHEAD CABLE TRAY ASSEMBLIES AND 12" FROM THE TOP OF ALL CABLE TRAY ASSEMBLIES TO THE FACILITY FINISHED CEILING, UNLESS OTHERWISE NOTED.
9. YOU MUST PROVIDE ALL CABLE RUNS TERMINATING AT SPEAKER BREAKOUT BOX LOCATIONS. THESE RUNS MUST BE ENCLOSED IN FLEX CONDUIT REACHING TO THE SPEAKER TERMINATION POINTS AND CONTAIN A MINIMUM 36" PIGTAIL AT LOUDSPEAKER FOR AV SYSTEM CONNECTION.
10. YOU MUST PROVIDE A SERVICE LOOP NO LESS THAN 10'-0" AT ALL AV SYSTEMS RACK LOCATIONS AND NO LESS THAN 36" AT ALL AV SYSTEMS PULL AND BREAKOUT BOXES, UNLESS OTHERWISE NOTED.
11. ALL AV SYSTEMS MOUNTING HEIGHT IS TO CENTER OF DEVICE, UNLESS OTHERWISE NOTED.
12. ALL AV SYSTEMS MINIMUM STANDARD RECEPTACLE HEIGHT IS 15 INCHES ABOVE FINISHED FLOOR, UNLESS OTHERWISE NOTED.
13. ALL AV SYSTEMS MINIMUM STANDARD SWITCH HEIGHT IS 48 INCHES ABOVE FINISHED FLOOR UNLESS OTHERWISE NOTED.
14. ALL AV SYSTEMS BOXES AND CONDUIT IN NEW WALLS AND CEILINGS MUST BE FLUSH MOUNTED OR CONCEALED FROM GUESTS VIEW, UNLESS OTHERWISE NOTED.
15. THERE MUST BE NO IP CONNECTIONS BETWEEN THE UCI NETWORK AND THE TMC NETWORK CORE. CONNECTIONS MUST BE ISOLATED TO THE CALTRANS TMC AV NETWORK.

POWER CONNECTION NOTES:

1. YOU MUST USE #12 AWG MINIMUM STRANDED COPPER CONDUCTORS FOR ALL AV POWER CIRCUITS, UNLESS OTHERWISE NOTED. ALL AV CIRCUITS WILL BE FED FROM THE AV ISOLATED GROUND POWER PANEL. THE ISOLATED GROUND POWER PANEL MUST BE FED FROM A DEDICATED SHIELDED ISOLATION TRANSFORMER.
2. ALL AV SYSTEMS CIRCUITS REQUIRE INDEPENDENT NEUTRAL, GROUND AND ISOLATED GROUND CONDUCTORS OF EQUAL CURRENT CARRYING CAPACITY PER CIRCUIT, UNLESS OTHERWISE NOTED.
3. ALL AV SYSTEMS INTER-RACK AND INTERNAL DEDICATED ELECTRONIC ENCLOSURE WIRING TO BE PROVIDED BY THE INSTALLING AV CONTRACTOR, UNLESS OTHERWISE NOTED.

CABLING AND CONDUIT NOTES:

1. ALL AV SYSTEMS WIRING MUST BE IN CONDUIT UNLESS OTHERWISE NOTED. LOW LEVEL AUDIO CABLES, CONTROL CABLES, VIDEO CABLES AND HIGH LEVEL SPEAKER CABLE MUST BE ROUTED IN SEPARATE CONDUITS WITH A MINIMUM 6 INCHES SPACING.
2. ALL CONDUITS SPECIFIED MUST BE ELECTRIC METALLIC TUBING (EMT) OR RIGID METAL TYPE. FLEXIBLE CONDUITS MAY BE USED IN RUNS OF 72" OR LESS. FLEXIBLE CONDUITS MUST NOT BE ALLOWED WHERE ACCESS CANNOT BE PROVIDED TO THE FULL LENGTH OF THE CONDUIT RUN.
3. ALL AV SYSTEMS CABLE RUNS, INCLUDING COAX CABLE, MUST BE CONTINUOUS FROM SOURCE TO DESTINATION WITHOUT SPLICES. NO EXCEPTIONS.
4. ALL CABLES MUST BE PLENUM RATED.
5. ALL AV SYSTEMS CONDUIT MUST NOT EXCEED 100 FEET OR AS RECOMMENDED BY CABLE MANUFACTURER.
6. YOU MUST PERMANENTLY AND UNIQUELY LABEL ALL CABLE, CONDUIT AND BOXES FOR EASE OF IDENTIFICATION.
7. YOU MUST PULL A METERED AND LABELED PULL STRING IN ALL CONDUITS, REGARDLESS OF FILL. ALL CABLING MUST BE TESTED FOR CONTINUITY PRIOR TO CONNECTION TO AV EQUIPMENT. ALL CATEGORY 5 (CAT5), CATEGORY 6 (CAT6), CATEGORY 5E (CAT5E) AND CATEGORY 6E (CAT6E) CABLES MUST BE TESTED TO BISCI STANDARDS AND A TEST REPORT PROVIDED PRIOR TO CONNECTION OF ALL AV SYSTEMS AFTER TERMINATION INTO THE DESIGNATED JACKS.

ELECTRONIC EQUIPMENT ROOM (EER) REQUIREMENTS:

1. YOU MUST INSURE THAT ALL ELECTRONIC EQUIPMENT ROOMS BE CLEAN AND DUST FREE PRIOR TO INSTALLATION OF ANY AV ELECTRONIC EQUIPMENT.
2. YOU MUST PROVIDE SEPARATE DEDICATED HVAC UNIT CAPABLE OF CONTINUOUS 24 HOURS OF UNINTERRUPTED OPERATION PER DAY FOR THE ELECTRONIC EQUIPMENT ROOM. THIS UNIT MUST BE OPERATIONAL FOR A MINIMUM OF 48 HOURS AND THE FILTERS REPLACED PRIOR TO INSTALLATION OF AV SYSTEMS RACKS.
3. THE ELECTRONIC EQUIPMENT ROOM MUST BE MAINTAINED AT 65 DEGREES FAHRENHEIT TO 75 DEGREES FAHRENHEIT AND 10% TO 90% RELATIVE HUMIDITY NON-CONDENSING.
4. YOU MUST SEAL ALL CONCRETE SURFACES, WALLS, FIRE PROOFING, ETC. AND/OR PROVIDE VINYL FLOOR, PAINTED WALLS AND DROP ACOUSTICAL CEILING IN THE ELECTRONIC EQUIPMENT ROOM TO PREVENT DUST IN THE EQUIPMENT AREA THAT WILL AFFECT THE AV SYSTEMS SHOW EQUIPMENT.

GENERAL NOTES

APPROVED FOR ELECTRICAL WORK ONLY

E-2

STATE OF CALIFORNIA - DEPARTMENT OF TRANSPORTATION
Caltrans
CONSULTANT FUNCTIONAL SUPERVISOR: STEVE HUFF
CALCULATED-DESIGNED BY: JOSHUA MCNEILL
CHECKED BY: RANDY RATZLAFF
REVISED BY
DATE REVISED

LAST REVISION 04-01-15
DATE PLOTTED => 13-MAY-2015
TIME PLOTTED => 08:48

Dist	COUNTY	LOCATION	POST MILES TOTAL PROJECT	SHEET No.	TOTAL SHEETS
12	Ora	Var		4	91

REGISTERED CIVIL ENGINEER 2-25-15 DATE

May 04, 2015
PLANS APPROVAL DATE

REGISTERED PROFESSIONAL ENGINEER CARLOS ORTIZ No. 57535 Exp. 12-31-15 CIVIL STATE OF CALIFORNIA

THE STATE OF CALIFORNIA OR ITS OFFICERS OR AGENTS SHALL NOT BE RESPONSIBLE FOR THE ACCURACY OR COMPLETENESS OF SCANNED COPIES OF THIS PLAN SHEET.

RBF CONSULTING
14725 ALTON PKWY
IRVINE, CA 92618

AV DEVICE ABBREVIATIONS

AC	ALTERNATING CURRENT
AFF	ABOVE FINISHED FLOOR
AMP	AUDIO AMPLIFIER
ANT	ANTENNA
ATMS	ADVANCED TRANSPORTATION MANAGEMENT SYSTEM
AV	AUDIO VISUAL SHOW SYSTEMS
AVR	AUDIO/VIDEO RACK
CAM	CAMERA
CMS	CONTROL ROOM MANAGEMENT SUITE
COM	COMMUNICATION
CPU	GENERAL PURPOSE ADMINSTRATIVE COMPUTER
CTL	MASTER CONTROLLER
DGE	DIGITAL GRAPHICS ENGINE
DM	DIGITALMEDIA
DSP	DIGITAL SIGNAL PROCESSOR
DVD	DVD PLAYER
DVI	DIGITAL VIDEO INTERFACE
DVP	DIGITAL SIGNAGE PLAYER
EOC	EMERGENCY OPERATIONS CENTER
FAC	FACILITY
Flr	FLOOR
GBIC	GIGABIT INTERFACE CONVERTER
HDMI	HIGH-DEFINITION MULTIMEDIA INTERFACE
HVAC	HEATING, VENTILATION & AIR CONDITIONING
ICP	INTERCONNECT PANEL
IDF	INTERMEDIATE DISTRIBUTION FRAME
IN	INCH or INCHES
IN	INPUT
JBX	JUNCTION BOX
KBD	RACKMOUNT USB KEYBOARD AND MOUSE
LAN	LOCAL AREA NETWORK
LCD	LIQUID CRYSTAL DISPLAY (LCD) FLAT PANEL DISPLAY
LED	LIGHT EMITTING DIODODE COMPONENT
MIC	MICROPHONE
NA	NOT APPLICABLE
NET	NETWORK
OPS	OPERATIONS
PRJ	VIDEO PROJECTOR
PTB	POPUP TABLE BOX
PVM	PARALLEL VIRTUAL MACHINE (DIGITAL GRAPHICS ENGINE) DGE
PWR	POWER RELATED COMPONENTS
RCP	RACK CONNECTION PANEL
RCV	RECEIVER
RF	RADIO FREQUENCY
Rm	ROOM
RPD	REAR PROJECTION DISPLAY
RU	RACK UNIT(S) (1.75")
SDI	SERIAL DIGITAL INTERFACE
SFP	SMALL FORM-FACTOR PLUGGABLE
SPK	SPEAKER
TMC	TRANSPORTATION MANAGEMENT CENTER
TSC	INTERACTIVE KIOSK TOUCH SCREEN
TUN	TUNER
UPS	UNINTERRUPTIBLE POWER SUPPLY
VSP	VIDEO SIGNAL PROCESSOR
VSW	VIDEO SWITCHER
VTC	VIDEO TELECONFERENCE
VWP	VIDEO WALL PROCESSOR
WAP	WIRELESS ACCESS POINT
WMS	WIRELESS MICROPHONE SYSTEM
W/	WITH
XMTR	TRANSMITTER

AV DEVICE ABBREVIATIONS KEY

[XXX] [NN] - [DD]

AV DEVICE ABBREVATION: DESIGNATES EQUIPMENT TYPE BY CATEGORY

DESIGNATES EQUIPMENT TYPE MANUFACTURER AND MODEL

DESIGNATES EQUIPMENT TYPE UNIQUE NUMBER

AV CABLE TYPE TABLE

CABLE TYPE	PLENUM	APPLICATION	PART #	DESCRIPTION	OD (IN)	AREA (IN^2)	CM RATINGS
A	YES	AUDIO-MIC/LINE LEVEL	-	LINE LEVEL AES/EBU	0.165	0.021	-
N	YES	CONTROL-NETWORK-CAT6	-	CAT6 - UTP	0.225	0.040	-
NS	YES	CRESTRON DIGITAL MEDIA CAT5E	DM-CBL-P	DIGITALMEDIA CABLE, PLENUM	0.244	-	NEC ARTICLE800;UL SUBJECT 444, TYPE CM; CSA TYPE CMG
R	YES	RF	-	#10 RG8U 50 OHM SOLID	0.364	0.104	-
S	YES	AUDIO-SPEAKER	-	#12-2 TWISTED PAIR PVC JACKET	0.252	0.050	-
T	YES	CONTROL-SERIAL	-	RS-232/422 SERIAL CABLE - 8 COND. SHIELDED 24AWG	0.259	0.053	-
V	YES	VIDEO CABLE COAX	-	-	-	-	-
Z	YES	CRESTRON DIGITAL MEDIA FIBER	CRESFIBER8G-P	CRESFIBER MULTIMODE FIBER OPTIC CABLE - 50/125 X4 BREAKOUT	0.313	-	OFNR, CSA FT6

ABBREVIATIONS

APPROVED FOR ELECTRICAL WORK ONLY

E-3

STATE OF CALIFORNIA - DEPARTMENT OF TRANSPORTATION
Caltrans

CONSULTANT FUNCTIONAL SUPERVISOR: STEVE HUFF
CALCULATED-DESIGNED BY: JOSHUA MCNEILL
CHECKED BY: RANDY RATZLAFF
REVISED BY
DATE REVISED

LAST REVISION 04-01-15
DATE PLOTTED => 13-MAY-2015
TIME PLOTTED => 08:48

Dist	COUNTY	LOCATION	POST MILES TOTAL PROJECT	SHEET No.	TOTAL SHEETS
12	Ora	Var		5	91

REGISTERED CIVIL ENGINEER — DATE 2-25-15

REGISTERED PROFESSIONAL ENGINEER — CARLOS ORTIZ — No. 57535 — Exp. 12-31-15 — CIVIL — STATE OF CALIFORNIA

May 04, 2015
PLANS APPROVAL DATE

THE STATE OF CALIFORNIA OR ITS OFFICERS OR AGENTS SHALL NOT BE RESPONSIBLE FOR THE ACCURACY OR COMPLETENESS OF SCANNED COPIES OF THIS PLAN SHEET.

RBF CONSULTING
14725 ALTON PKWY
IRVINE, CA 92618

PLAN SYMBOLS

AUDIO DEVICES

SPK[NN]-[DD]
CEILING MOUNTED SPEAKER TYPE AND NUMBER

SPK[NN]-[DD]
SURFACE MOUNTED SPEAKER TYPE, NUMBER AND MOUNTING HEIGHT ABOVE FINISHED FLOOR, IF APPLICABLE

ELECTRICAL DEVICES

XXXVAC
XXA
INSTALL SURFACE MOUNTED DUPLEX RECEPTACLE, VOLTAGE, AMPERAGE AND MOUNTING HEIGHT ABOVE FINISHED FLOOR, IF APPLICABLE. COORDINATE WITH ENGINEER FOR RECEPTICAL TYPE (NORMAL, ESSENTIAL OR CRITICAL).

XXXVAC
XXA
INSTALL CEILING MOUNTED QUAD RECEPTACLE, VOLTAGE AND AMPERAGE. COORDINATE WITH ENGINEER FOR RECEPTICAL TYPE (NORMAL, ESSENTIAL OR CRITICAL).

XXXVAC
XXA
INSTALL SURFACE MOUNTED QUAD RECEPTACLE, VOLTAGE, AMPERAGE AND MOUNTING HEIGHT ABOVE FINISHED FLOOR, IF APPLICABLE. COORDINATE WITH ENGINEER FOR RECEPTICAL TYPE (NORMAL, ESSENTIAL OR CRITICAL).

XXXVAC
XXA
INSTALL FLOOR OR IN-GROUND MOUNTED QUAD RECEPTACLE, VOLTAGE AND AMPERAGE. COORDINATE WITH ENGINEER FOR RECEPTICAL TYPE (NORMAL, ESSENTIAL OR CRITICAL).

NOTE: ALL DUPLEX AND QUAD RECEPTACLES ARE 120V (AC) 60Hz, UNLESS OTHERWISE NOTED.

XXXVAC
XXA
INSTALL SURFACE MOUNTED SPECIAL ELECTRICAL SERVICE, VOLTAGE, AMPERAGE AND MOUNTING HEIGHT ABOVE FINISHED FLOOR, IF APPLICABLE. COORDINATE WITH ENGINEER FOR RECEPTICAL TYPE (NORMAL, ESSENTIAL OR CRITICAL).

[XXX][NN]-[DD]
CEILING MOUNTED JUNCTION BOX AND NUMBER

[XXX][NN]-[DD]
WALL MOUNTED JUNCTION BOX, NUMBER AND MOUNTING HEIGHT ABOVE FINISHED FLOOR, IF APPLICABLE

[XXX][NN]-[DD]
FLOOR MOUNTED JUNCTION BOX AND NUMBER

[XXX][NN]-[DD]
TOUCH SCREEN AND NUMBER

[XXX][NN]-[DD]
FLOOR CONNECTION PANELS

[XXX][NN]-[DD]
RACK MOUNTED AV NETWORK SWITCH

[XXX][NN]-[DD]
WALL MOUNTED LCD DISPLAY & RECEIVER

SHEET NOTATIONS

X — CONSTRUCTION NOTE NUMBER

XXX — EQUIPMENT ENCLOSURE

CABLE AND HOMERUNS

X/XX — FILL QUANTITY AND CABLE TYPE PER TABLE ON SHEET E-24
XXXX — TERMINATION LOCATION SHALL BE ROOM 125 UNLESS OTHERWISE NOTED

SINGLE LINE SYMBOLS

GENERIC DEVICES

[XXX][NN]-[DD] — DEVICE TYPE ABBREVIATION
XXXX — MANUFACTURER AND MODEL NUMBER
XXXX — BRIEF DESCRIPTION

OUTPUT WIRE NUMBER
CABLE TYPE
OUTPUT SIGNAL TYPE

NOTE: THE ABOVE INFORMATION DEPICTED FOR OUTPUTS IS ALSO TYPICAL FOR INPUTS

PARTIAL DEVICE OR CONTINUATION

AUDIO AMPLIFIER CHANNEL (INPUT AND OUTPUT CONNECTIONS NOT SHOWN)

IN-WALL SPEAKER

PERSONAL HEADPHONES

CEILING SPEAKER

BELTPACK XMTR AND LAPEL MIC

SIX CHANNEL HANDHELD XMTR

ANTENNA OR WIFI ACCESS POINT

USER WIRELESS CONTROL

CAMERA

DM — TOUCH SCREEN

LCD DISPLAY

TABLE MIC

KBD — KEYBOARD AND MOUSE

GENERIC WIRING AND WIRING DEVICES

WIRE BUSS OR WIRE BUNDLE

WIRE CONNECTION

NO WIRE CONNECTION

TEMPORARY CONNECTION

XXX — TO OR FROM SYSTEMS PROVIDED BY OTHERS

SHEET NOTATIONS

TO SHEET NUMBER / DESTINATION ID — OFF SHEET FLAG: SOURCE

FROM SHEET NUMBER / SOURCE ID — OFF SHEET FLAG: DESTINATION

SAME SHEET FLAG

XXX — DEVICE LOCATION AT TOP OF SHEET

XXX — DEVICE LOCATION AT SIDE OF SHEET

XXX — EQUIPMENT ENCLOSURE

Exist EQUIPMENT

LEGEND

APPROVED FOR ELECTRICAL WORK ONLY

E-4

STATE OF CALIFORNIA - DEPARTMENT OF TRANSPORTATION
Caltrans

CONSULTANT FUNCTIONAL SUPERVISOR: STEVE HUFF
CALCULATED-DESIGNED BY: JOSHUA MCNEILL
CHECKED BY: RANDY RATZLAFF
REVISED BY
DATE REVISED

LAST REVISION 04-01-15
DATE PLOTTED => 13-MAY-2015
TIME PLOTTED => 08:48

Dist	COUNTY	LOCATION	POST MILES TOTAL PROJECT	SHEET No.	TOTAL SHEETS
12	Ora	Var		6	91

REGISTERED CIVIL ENGINEER — DATE 2-25-15

May 04, 2015
PLANS APPROVAL DATE

REGISTERED PROFESSIONAL ENGINEER — CARLOS ORTIZ — No. 57535 — Exp. 12-31-15 — CIVIL — STATE OF CALIFORNIA

THE STATE OF CALIFORNIA OR ITS OFFICERS OR AGENTS SHALL NOT BE RESPONSIBLE FOR THE ACCURACY OR COMPLETENESS OF SCANNED COPIES OF THIS PLAN SHEET.

RBF CONSULTING
14725 ALTON PKWY
IRVINE, CA 92618

NOTES:

1. SEE SHEETS E-2, E-3 & E-4 FOR GENERAL NOTES, ABBREVIATIONS AND LEGEND.

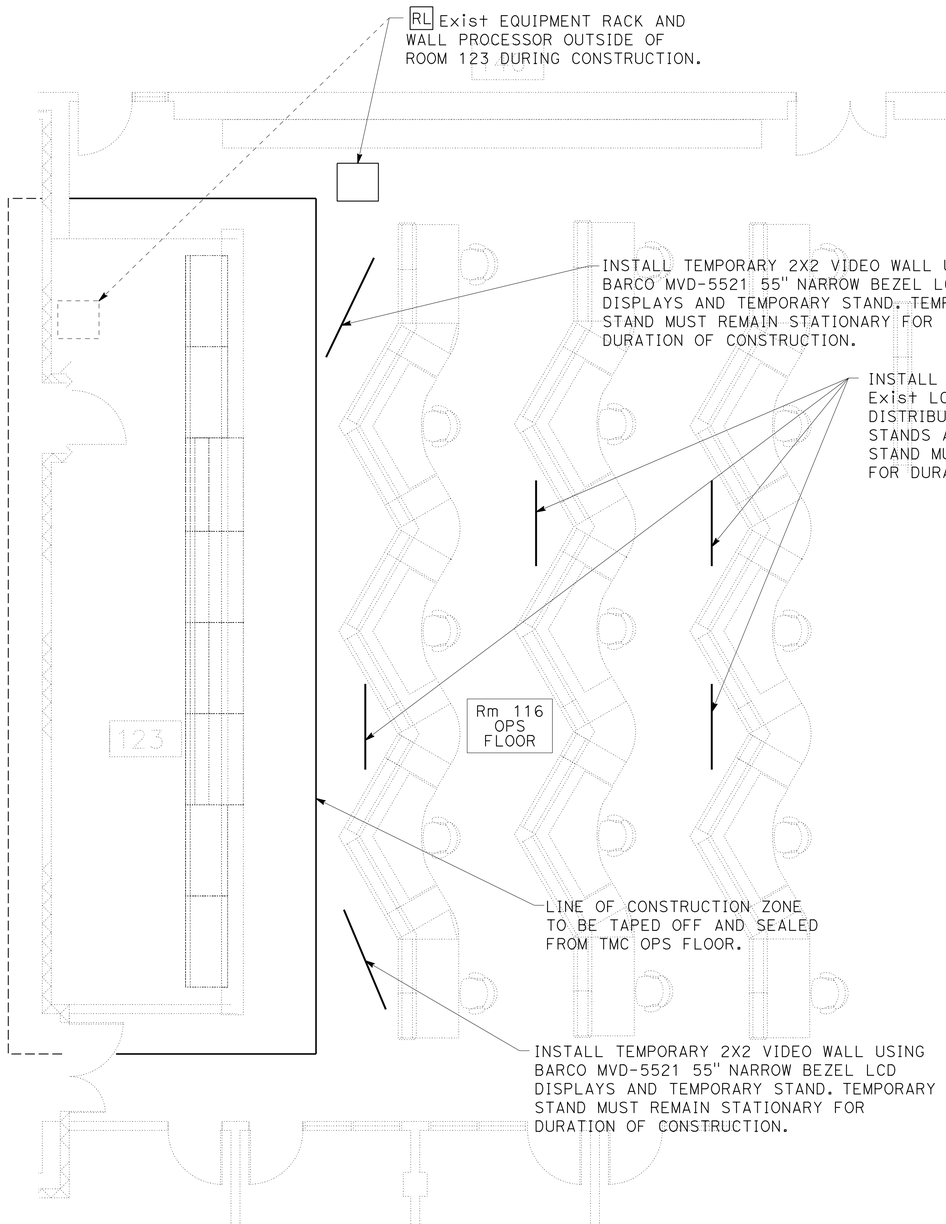

FIRST FLOOR AV PLAN

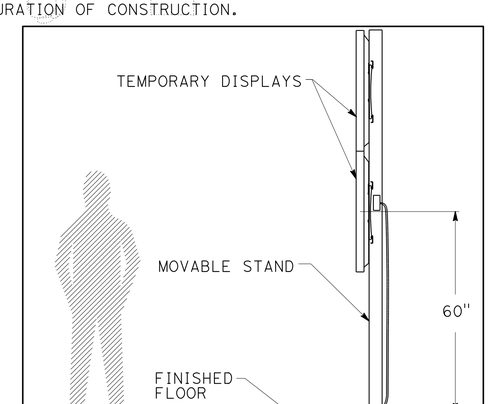

TYPICAL TEMPORARY 2X2 VIDEO WALL ELEVATION

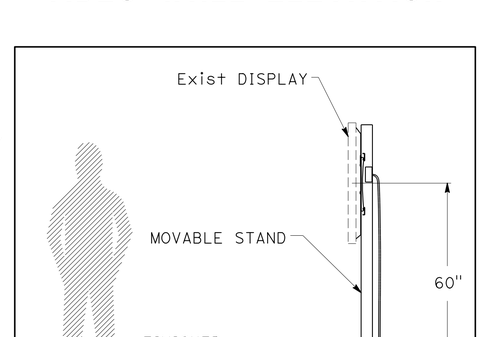

TYPICAL TEMPORARY 1X2 DISPLAY ELEVATION

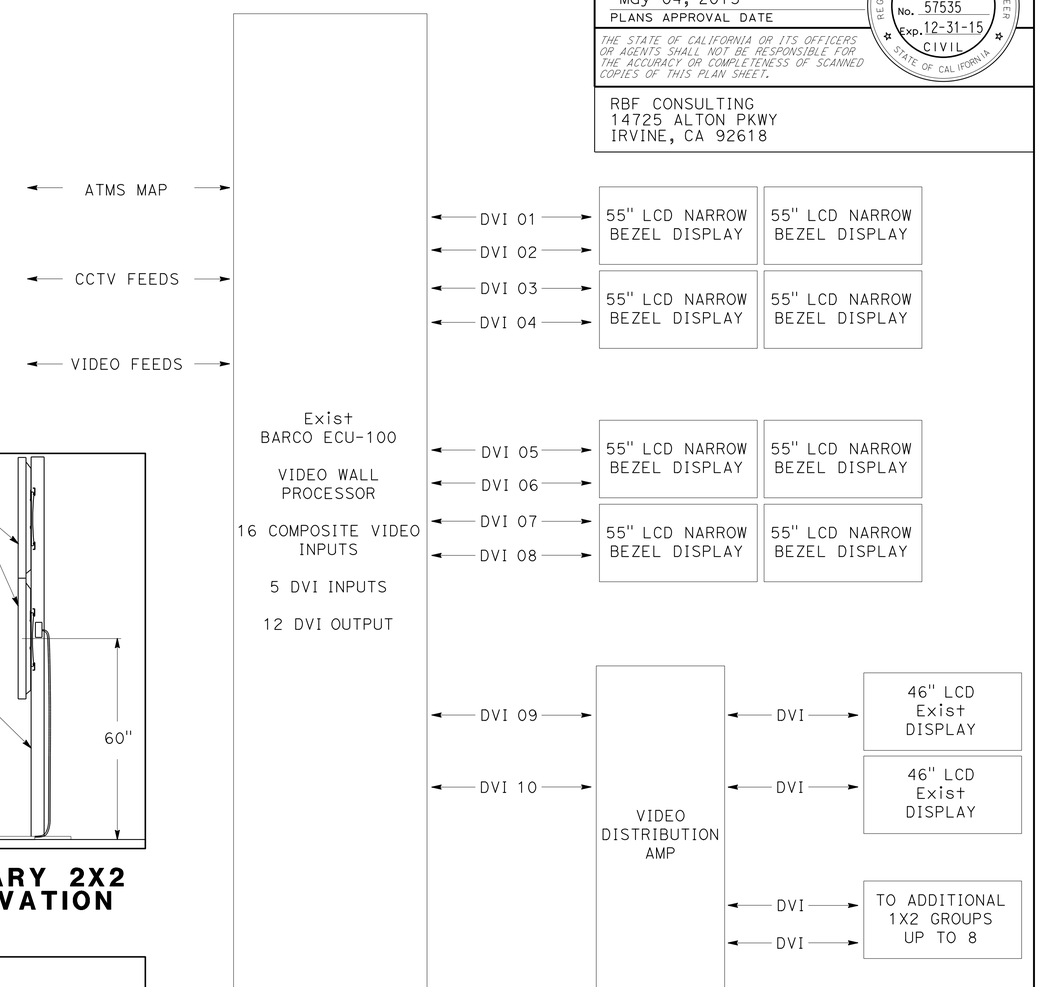

CALTRANS TMC TEMPORARY VIDEO SET UP

LOCATION A1 (TEMPORARY) TEMPORARY AUDIO VISUAL SYSTEM

NO SCALE

APPROVED FOR ELECTRICAL WORK ONLY

E-5

STATE OF CALIFORNIA - DEPARTMENT OF TRANSPORTATION — Caltrans

CONSULTANT FUNCTIONAL SUPERVISOR: STEVE HUFF
CALCULATED-DESIGNED BY: JOSHUA MCNEILL
CHECKED BY: RANDY RATZLAFF
REVISED BY
DATE REVISED

LAST REVISION 04-01-15 | DATE PLOTTED => 13-MAY-2015 | TIME PLOTTED => 08:48

Dist	COUNTY	LOCATION	POST MILES TOTAL PROJECT	SHEET No.	TOTAL SHEETS
12	Ora	Var		7	91

REGISTERED CIVIL ENGINEER — DATE 2-25-15

May 04, 2015
PLANS APPROVAL DATE

REGISTERED PROFESSIONAL ENGINEER — CARLOS ORTIZ — No. 57535 — Exp. 12-31-15 — CIVIL — STATE OF CALIFORNIA

THE STATE OF CALIFORNIA OR ITS OFFICERS OR AGENTS SHALL NOT BE RESPONSIBLE FOR THE ACCURACY OR COMPLETENESS OF SCANNED COPIES OF THIS PLAN SHEET.

RBF CONSULTING
14725 ALTON PKWY
IRVINE, CA 92618

NOTES:

1. SEE SHEETS E-2, E-3 & E-4 FOR GENERAL NOTES, ABBREVIATIONS AND LEGEND.
2. ALL CABLE HOMERUNS TO Rm 125 (COMPUTER ROOM), UNLESS OTHERWISE NOTED.
3. SEE AV FILL BOX AND FILL SCHEDULE ON SHEET E-28 TO E-37 FOR CABLE REQUIREMENTS AT EACH LOCATION.
4. THERE MUST BE NO IP CONNECTIONS BETWEEN THE UCI NETWORK AND THE TMC NETWORK CORE. CONNECTIONS MUST BE ISOLATED TO THE CALTRANS TMC AV NETWORK.

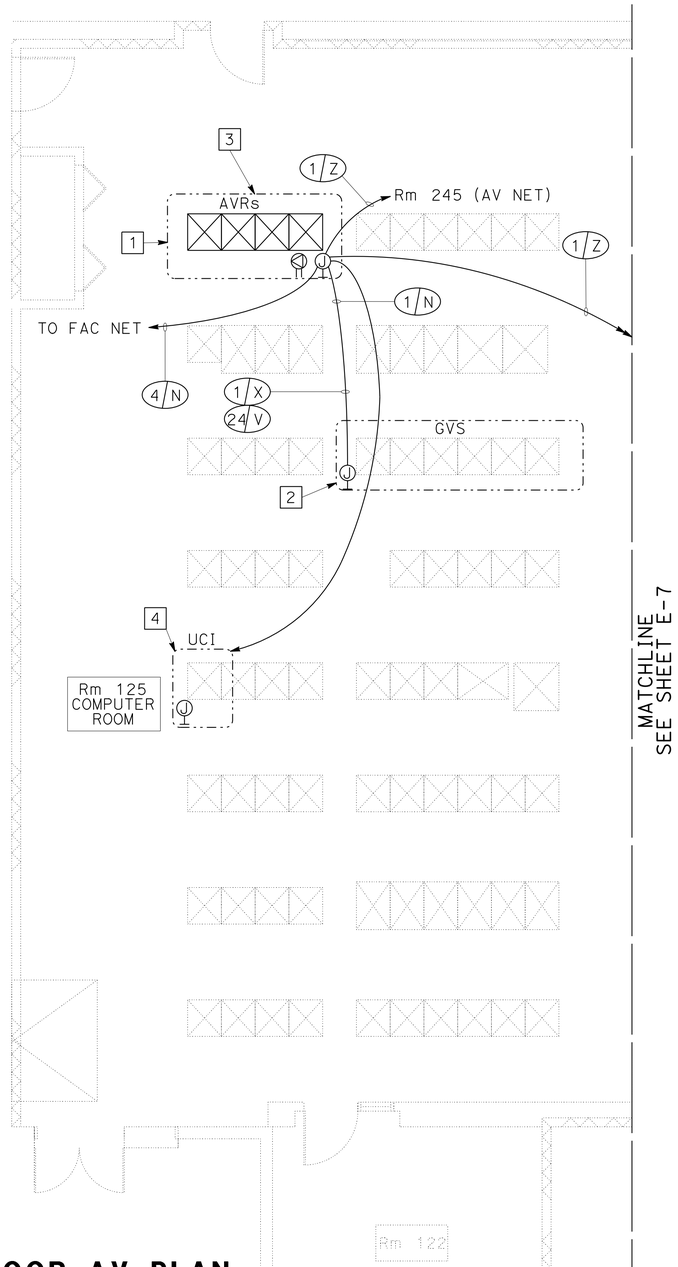

FIRST FLOOR AV PLAN

CONSTRUCTION NOTES:

1. REMOVE 4 Exist AVRs AND EQUIPMENT. INSTALL 4 AVRs COMPLETE WITH 2 CISCO SG500-52 ETHERNET, 9 CISCO MGBSX1 MINI GBIC, 1 CRESTRON CP3 SYSTEM CONTROL, 1 QSC CORE 3000 DSP, AND 1 Exist COMPUTER WITH NEW RACKMOUNT LCD AND KEYBOARD. SEE SHEET E-38 TO E-71 FOR OVERALL AV NETWORK LINE DIAGRAM.
   INSTALL CRESTRON DM-MD 64X64 DIGITAL VIDEO SWITCH WITH 5 CRESTRON 8 PORT HDMI IN DMB-4K-I-HD BLADES, 5 CRESTRON 8 PORT HDMI OUT DMB-4K-O-HD BLADES, 1 CRESTRON DMB-I-S FIBER IN BLADE, AND 2 CRESTRON DMB-O-S FIBER OUT BLADES IN NEW AVRs.
   INSTALL 10 HDTV TUNERS, 3 Exist JVC SR-HD2500US DVD/HDD RECORDERS, 2 NEW DVD/HDD RECORDERS, 21 SDI TO HDMI CONVERTORS, 5 HDMI/HD-SDI CONVERTORS, 16 CRESTRON DGE-2 DIGITAL GRAPHICS ENGINES IN NEW AVRs. INSTALL CRESTRON CEN-13-3 CARD INTERFACE WITH CRESTRON CP3 CARD INTERFACE IN NEW AVRs. INSTALL 6 QSC I/O FRAMES WITH 18 QSC CIML4 INPUT CARDS, 3 QSC CODP4 DATAPORT OUT CARDS, AND 2 QSC COL4 LINE OUT CARDS IN NEW AVRs.
   INSTALL 2 CRESTRON CEN-TRACK CARD FRAMES WITH 4 CRESTRON ATC-AMFM2 TUNERS, 2 CRESTRON ATC AMFMXM TUNERS IN NEW AVRs.
   INSTALL 3 QSC CX-204V AMPLIFIERS, 4 WIRELESS RECEIVERS, AND 4 WIRELESS TRANSMITTERS.
   SEE SHEET E-43 TO E-51 OF AUDIO VIDEO SOURCE DEVICES LINE DIAGRAMS. INSTALL 7 UPS UNITS IN NEW AVRs. SEE SHEET E-15 TO E-23 FOR RACK DIAGRAMS.
2. INSTALL BARCO NGC-102 2-SLOT CHASSIS WITH 2 BARCO R9861455 HD-SDI ENCODER CARDS IN Exist RACK. MAKE CONNECTIONS TO Exist GVS PER VIDEO WALL AND DATA WALL DISPLAY/CONTROL LINE DIAGRAM ON SHEET E-65. SEE SHEET E-48 FOR DIGTAL VIDEO CONNECTIONS TO NEW RACKS IN ROOM 125.
3. INSTALL WIRELESS TOURGUIDE SYSTEM COMPLETE WITH 1 CARRYING CASE WITH CHARGER FOR RECEIVERS, 5 DIGITAL BELTPACK RECEIVERS, 15 STETHOPHONE RECEIVERS, 2 BELTPACK TRASMITTER WITH AUDIO AND MICROPHONE INPUT, 2 LAVALIERS WITH WIRELESS CONNECTORS, 1 HANDHELD TRANSMITTER, AND 5 USER HEADPHONES. SEE SHEET E-47 FOR CONFERENCE ROOM VOICE ASSIST AND FACILITY TOURGUIDE SYSTEM.
4. MAKE CONNECTIONS TO UCI INTERFACE. SEE SHEET E-52 FOR INTERFACE BETWEEN CALTRANS AND THE UNIVERSITY OF CALIFORNIA IRVING, INSTITUTE OF TRAFFIC STUDIES LINE DIAGRAM.

AUDIO VISUAL SYSTEM (LOCATION A1)

NO SCALE

APPROVED FOR ELECTRICAL WORK ONLY

E-6

STATE OF CALIFORNIA - DEPARTMENT OF TRANSPORTATION
Caltrans
CONSULTANT FUNCTIONAL SUPERVISOR: STEVE HUFF
CALCULATED-DESIGNED BY: JOSHUA MCNEILL
CHECKED BY: RANDY RATZLAFF
REVISED BY
DATE REVISED

LAST REVISION 04-01-15 | DATE PLOTTED => 13-MAY-2015 | TIME PLOTTED => 08:48

Dist	COUNTY	LOCATION	POST MILES TOTAL PROJECT	SHEET No.	TOTAL SHEETS
12	Ora	Var		8	91

REGISTERED CIVIL ENGINEER 2-25-15 DATE

May 04, 2015
PLANS APPROVAL DATE

REGISTERED PROFESSIONAL ENGINEER CARLOS ORTIZ No. 57535 Exp. 12-31-15 CIVIL STATE OF CALIFORNIA

THE STATE OF CALIFORNIA OR ITS OFFICERS OR AGENTS SHALL NOT BE RESPONSIBLE FOR THE ACCURACY OR COMPLETENESS OF SCANNED COPIES OF THIS PLAN SHEET.

RBF CONSULTING
14725 ALTON PKWY
IRVINE, CA 92618

NOTES:

1. SEE SHEETS E-2, E-3 & E-4 FOR GENERAL NOTES, ABBREVIATIONS AND LEGEND.
2. ALL CABLE HOMERUNS TO ROOM 125 (COMPUTER ROOM), UNLESS OTHERWISE NOTED.
3. SPK02-116-01 THROUGH SPK02-116-06; EXISTING SPEAKER LOCATIONS.
4. TOUCH SCREENS LOCATED ON DESKS IN OPS FLOOR. ALL CABLE IS INSTALLED UNDER RAISED FLOOR AND TERMINATED AT THE END DEVICE.
5. SEE AV BOX AND FILL SCHEDULE ON SHEET E-28 TO E-37 FOR CABLE AND JUNCTION REQUIREMENTS AT EACH LOCATION.

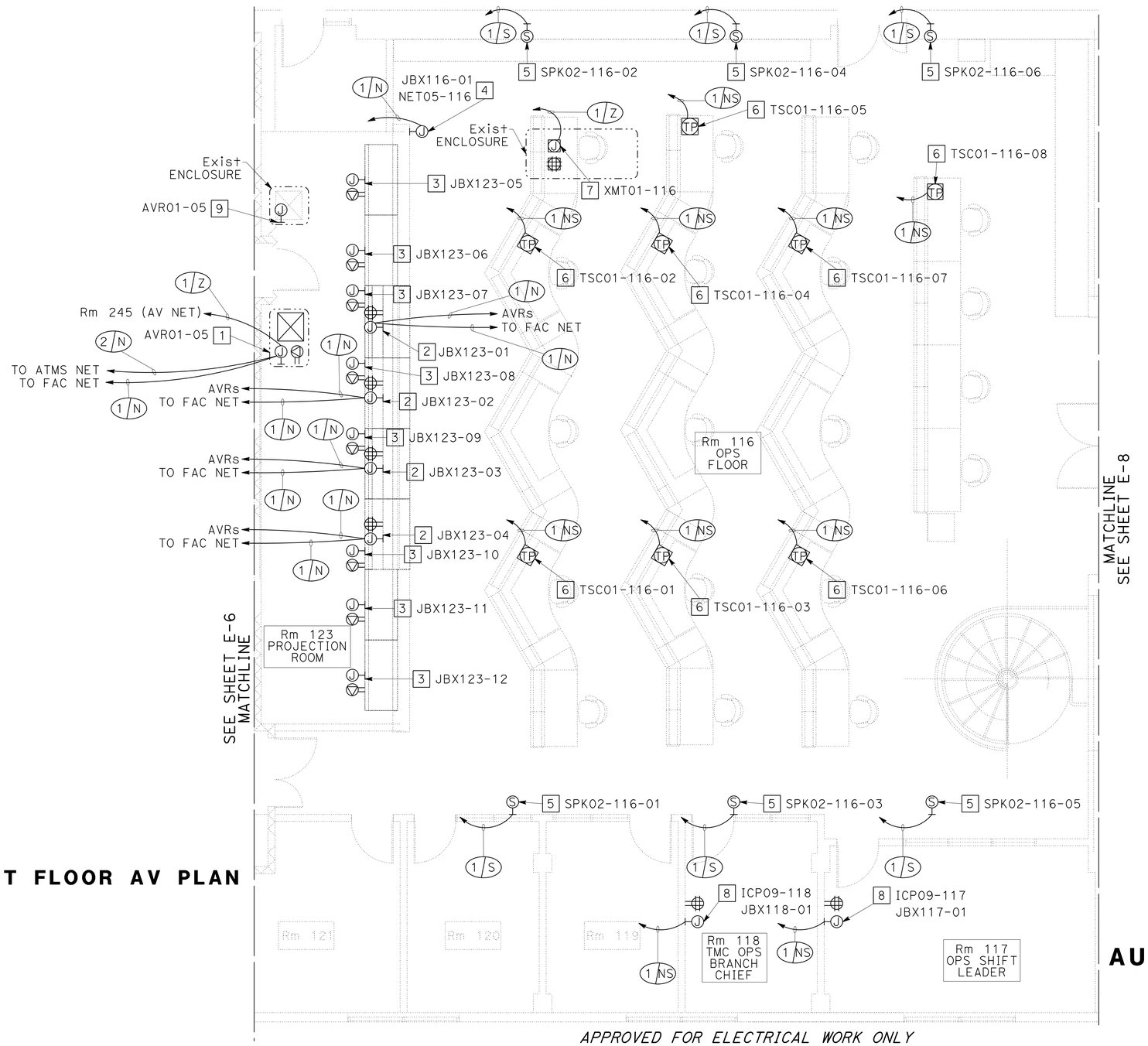

FIRST FLOOR AV PLAN

APPROVED FOR ELECTRICAL WORK ONLY

CONSTRUCTION NOTES:

1. INSTALL AVR COMPLETE WITH CISCO SG500-52 ETHERNET SWITCH AND 2 CISCO MGBSX1 MINI GBIC. SEE SHEET E-40 FOR AV NETWORK LINE DIAGRAM. INSTALL Exist COMPUTER, BARCO 1 CHANNEL DVI INPUT NODE, BARCO 9835100-SI6 CMS SERVER, BARCO 9844200_DSW7 TFN APPLICATION SERVER, AND BARCO 9835000_64CH TFN 64 CHANNEL UNISTREAM INPUT NODE IN NEW AVR. SEE SHEET E-69 FOR VIDEO WALL AND DATA WALL DISPLAY/CONTROL LINE DIAGRAM. INSTALL UPS IN NEW AVR. SEE SHEET E-15 AND E-23 FOR EQUIPMENT RACK DETAIL.
2. INSTALL JUNCTION BOX, HD DIGITAL SIGNAGE PLAYER, AND BARCO OV-OLSF-721 70" LED LIT REAR PROJECTION CUBE. SEE SHEET E-69 FOR VIDEO WALL AND DATA WALL DISPLAY/CONTROL LINE DIAGRAM. SEE SHEET E-14 AND VIDEO WALL STRUCTURAL FRAME PLANS FOR DISPLAY POSITIONING.
3. INSTALL JUNCTION BOX, BARCO R9899511_H2JP TFN JP 2 CHANNEL OUPUT NODE, AND 4 BARCO OV-OLSF-721 70" LED/RP DISPLAY. SEE SHEET E-70 AND E-72 FOR WALL DISPLAY/CONTROL LINE DIAGRAM. SEE SHEET E-14 AND VIDEO WALL STRUCTURAL FRAME PLANS FOR DISPLAY POSITIONING.
4. INSTALL JUNCTION BOX AND CISCO AIRONET 1600 WIRELESS ACCESS POINT. SEE SHEET E-41 FOR AV NETWORK LINE DIAGRAM.
5. REMOVE Exist SPEAKER. INSTALL 2-WAY 8" IN WALL SPEAKER. SEE SHEET E-46 FOR NETWORK AUDIO SYSTEM LINE DIAGRAM. VOLUME CONTROL MUST BE MAINTAINED AND TESTED. REMOVE Exist WIRES AND DRYWALL AS NEEDED AND/OR AS REQUESTED BY ENGINEER. REPAIR DAMAGED WALL AS NEEDED TO MATCH Exist.
6. REMOVE Exist TOUCH SCREEN, CONNECTION PANELS(S) INCLUDING WIRES, PLATES, AND DRYWALL AS NEEDED AND/OR AS REQUESTED BY ENGINEER. INSTALL CRESTRON V15-TILT-B V-PANEL 15" HD TOUCH SCREEN (BLACK). SEE SHEET E-50 FOR Rm 116 CONTROL SCREENS LINE DIAGRAM.
7. INSTALL CRESTRON DM-TX-401-S DIGITAL 8G FIBER TRANSMITTER AND BLU-RAY PLAYER. SEE SHEET E-49 FOR LOCAL VIDEO DISPLAY LINE DIAGRAM.
8. REMOVE AND SALVAGE Exist TOUCH SCREEN, CONNECTION PANELS(S) INCLUDING WIRES, PLATES, AND DRYWALL AS NEEDED AND/OR AS REQUESTED BY ENGINEER. INSTALL JUNCTION BOX, CRESTRON MP-WP181-C MEDIA PRESENTATION WALL PLATE AND CRESTRON V15 TOUCH SCREEN. SEE SHEET E-47 FOR LOCAL CONTROL SCREENS LINE DIAGRAM.
9. PROTECT IN PLACE Exist RACK AND EQUIPMENT. SEE SHEET E-18 FOR EXISTING RACK DETAIL.

AUDIO VISUAL SYSTEM (LOCATION A2)

NO SCALE

E-7

STATE OF CALIFORNIA - DEPARTMENT OF TRANSPORTATION
Caltrans
CONSULTANT FUNCTIONAL SUPERVISOR: STEVE HUFF
CALCULATED-DESIGNED BY: JOSHUA MCNEILL
CHECKED BY: RANDY RATZLAFF
REVISED BY
DATE REVISED

LAST REVISION 04-01-15
DATE PLOTTED => 13-MAY-2015
TIME PLOTTED => 08:48

Dist	COUNTY	LOCATION	POST MILES TOTAL PROJECT	SHEET No.	TOTAL SHEETS
12	Ora	Var		9	91

REGISTERED CIVIL ENGINEER 2-25-15 DATE

May 04, 2015
PLANS APPROVAL DATE

REGISTERED PROFESSIONAL ENGINEER CARLOS ORTIZ No. 57535 Exp. 12-31-15 CIVIL STATE OF CALIFORNIA

THE STATE OF CALIFORNIA OR ITS OFFICERS OR AGENTS SHALL NOT BE RESPONSIBLE FOR THE ACCURACY OR COMPLETENESS OF SCANNED COPIES OF THIS PLAN SHEET.

RBF CONSULTING
14725 ALTON PKWY
IRVINE, CA 92618

NOTES:

1. SEE SHEETS E-2, E-3 & E-4 FOR GENERAL NOTES, ABBREVIATIONS AND LEGEND.
2. ALL CABLE HOMERUNS TO Rm 125 (COMPUTER ROOM), UNLESS OTHERWISE NOTED.
3. JBX143-04 THROUGH JBX143-06, PANELS AND WIRELESS ANTENNAE TO BE INSTALLED ABOVE CEILING TILES.
4. SEE AV FILL BOX AND FILL SCHEDULE ON SHEET E-28 TO E-37 FOR CABLE REQUIREMENTS AT EACH LOCATION.

FIRST FLOOR AV PLAN

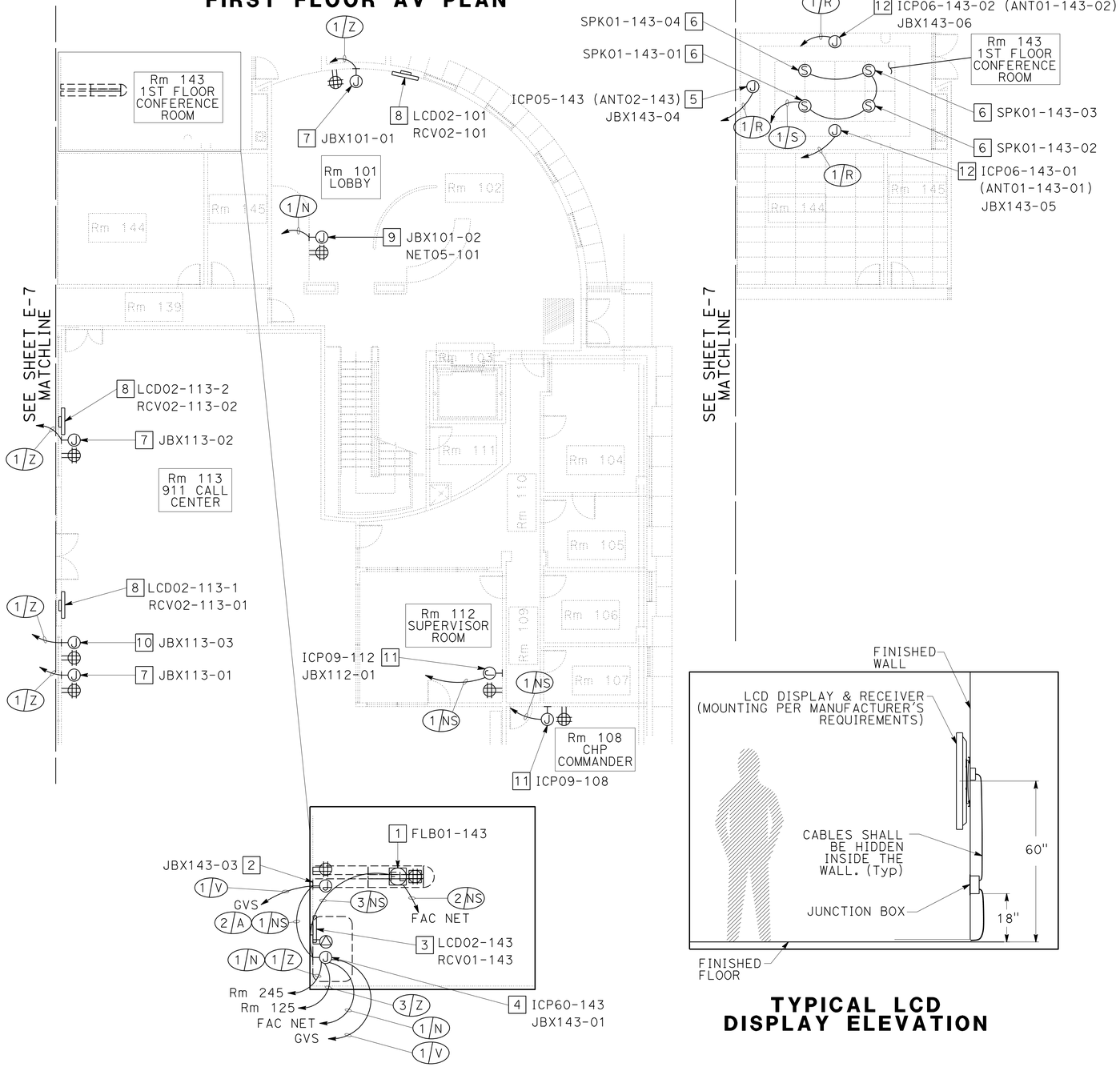

TYPICAL LCD DISPLAY ELEVATION

CONSTRUCTION NOTES:

1. INSTALL AV TRACK FLOOR CONNECTION, POP UP TABLE BOX (BLACK), CRESTRON DM-TX-200-C-2G WALL PLATE DIGITAL MEDIA 8G TRANSMITTER, 2 CRESTRON MP-WP-183, AND CRESTRON V15 TOUCH SCREEN. STRAP AND MANAGE CABLES. SEE SHEET E-61 FOR Rm 143 POP UP AND AV TRACK LINE DIAGRAM.
2. INSTALL JUNCTION BOX AND SDI TO HDMI MINI CONVERTER. SEE SHEET E-59 FOR LOCAL VIDEO SWITCHING SYSTEM LINE DIAGRAM. REMOVE Exist CONNECTION PANEL(S) INCLUDING WIRES, PLATES AND DRYWALL AS NEEDED AND/OR AS REQUESTED BY ENGINEER. REPAIR DAMAGED WALL AS NEEDED TO MATCH Exist.
3. REMOVE Exist DISPLAY. INSTALL CRESTRON DM-RMC-SCALER-C DM 8G RECEIVER, LED/LCD DISPLAY AND 2 DISPLAY SPEAKERS. SEE SHEET E-59 FOR LOCAL VIDEO SWITCHING SYSTEM.
4. INSTALL JUNCTION BOX, INTERCONNECT PANEL, AND CREDENZA RACK WITH CISCO SG300-10MP ETHERNET SWITCH, 2 CISCO MGBSX1 MINI GBIC, Exist COMPUTER, DVD/HDD RECORDER, WIRELESS CONTROL, WIRELESS ACCESS POINT, WIRELESS VIDEO RECEIVER, QSC I/O 22 DSP I/O INTERFACE, CRESTRON CP3 SYSTEM CONTROL, CRESTRON DM-MD8X8 VIDEO SWITCHER, 3 CRESTRON DMC-HD INPUT CARDS, CRESTRON DMC-DVI AUDIO INPUT, 2 CRESTRON DMC-C INPUT CARD, CRESTRON DMC-SDI INPUT CARD, CRESTRON DMC-F FIBER INPUT CARD, CRESTRON DMCO-53 OUTPUT CARD, CRESTRON DMCO-44 OUPUT CARD, CRESTRON DM TO HDMI INTERFACE, HDMI/HD-SDI CONVERTER, AND CRESTRON DGE-2 DIGITAL GRAPHICS ENGINE. SEE SHEET E-63 TO E-64 FOR LOCAL VIDEO SWITCHING SYSTEM LINE DIAGRAM. SEE SHEET E-27 FOR INTERCONNECT PANEL DETAIL. SEE SHEET E-22 FOR RACK DETAIL.
5. REMOVE Exist ANTENNA. INSTALL JUNCTION BOX, INTERCONNECT PANEL, AND ANTENNA. SEE SHEET E-43 FOR TOURGUIDE SYSTEM LINE DIAGRAM. FINAL LOCATION OF ANTENNA MUST BE APPROVED BY ENGINEER.
6. REMOVE Exist CEILING SPEAKER. INSTALL 6" CEILING SPEAKER. SEE SHEET E-45 FOR TMC OPS FLOOR AND CONFERENCE ROOM AUDIO LINE DIAGRAM. VOLUME CONTROL MUST BE MAINTAINED AND TESTED.
7. INSTALL JUNCTION BOX. SEE SHEET E-49 FOR LOCAL VIDEO DISPLAY LINE DIAGRAM.REMOVE Exist CONNECTION PANEL(S) INCLUDING WIRES, PLATES AND DRYWALL AS NEEDED AND/OR AS REQUESTED BY ENGINEER. REPAIR DAMAGED WALL AS NEEDED TO MATCH Exist.
8. REMOVE Exist DISPLAY, MOUNTING AND CABLES. INSTALL CRESTRON DM-RMC-SCALER-S DM 8G FIBER RECEIVER AND LED/LCD DISPLAY. SEE SHEET E-49 FOR LOCAL VIDEO DISPLAY LINE DIAGRAM.
9. INSTALL JUNCTION BOX, CISCO AIRONET 1600 WIRELESS ACCESS POINT, AND WIRELESS CONTROL. SEE SHEET E-41 FOR AV NETWORK LINE DIAGRAM. FINAL LOCATION OF ANTENNA MUST BE APPROVED BY ENGINEER.
10. INSTALL JUNCTION BOX, CRESTRON DM-TX-401S FIBER TRANSMITTER WITH CONTROL, AND BLU-RAY PLAYER. SEE SHEET E-49 FOR LOCAL VIDEO DISPLAY LINE DIAGRAM. REMOVE Exist CONNECTION PANEL(S) INCLUDING WIRES, PLATES AND DRYWALL AS NEEDED AND/OR AS REQUESTED BY ENGINEER. REPAIR DAMAGED WALL AS NEEDED TO MATCH Exist.
11. INSTALL JUNCTION BOX, CRESTRON MP-WP181-C MEDIA PRESENTATION WALL PLATE, AND CRESTRON V15 TOUCH SCREEN. SEE SHEET E-51 FOR LOCAL CONTROL SCREENS LINE DIAGRAM. REMOVE Exist CONNECTION PANEL(S) INCLUDING WIRES, PLATES AND DRYWALL AS NEEDED AND/OR AS REQUESTED BY ENGINEER. REPAIR DAMAGED WALL AS NEEDED TO MATCH Exist.
12. INSTALL JUNCTION BOX, INTERCONNECT PANEL, WIRELESS MIC ANTENNA, AND LAPEL MIC. SEE SHEET E-43 FOR TOURGUIDE SYSTEM LINE DIAGRAM. FINAL LOCATION OF ANTENNA MUST BE APPROVED BY ENGINEER.

AUDIO VISUAL SYSTEM (LOCATION A3)

NO SCALE

APPROVED FOR ELECTRICAL WORK ONLY

E-8

REVISED BY | DATE REVISED
JOSHUA MCNEILL | RANDY RATZLAFF
CALCULATED-DESIGNED BY | CHECKED BY
CONSULTANT FUNCTIONAL SUPERVISOR
STEVE HUFF
STATE OF CALIFORNIA - DEPARTMENT OF TRANSPORTATION
Caltrans

LAST REVISION 04-01-15 | DATE PLOTTED => 13-MAY-2015 | TIME PLOTTED => 08:48

Dist	COUNTY	LOCATION	POST MILES TOTAL PROJECT	SHEET No.	TOTAL SHEETS
12	Ora	Var		10	91

REGISTERED CIVIL ENGINEER — DATE 2-25-15

May 04, 2015
PLANS APPROVAL DATE

REGISTERED PROFESSIONAL ENGINEER — CARLOS ORTIZ — No. 57535 — Exp. 12-31-15 — CIVIL — STATE OF CALIFORNIA

THE STATE OF CALIFORNIA OR ITS OFFICERS OR AGENTS SHALL NOT BE RESPONSIBLE FOR THE ACCURACY OR COMPLETENESS OF SCANNED COPIES OF THIS PLAN SHEET.

RBF CONSULTING
14725 ALTON PKWY
IRVINE, CA 92618

NOTES:

1. SEE SHEETS E-2, E-3 & E-4 FOR GENERAL NOTES, ABBREVIATIONS AND LEGEND.
2. ALL CABLE HOMERUNS TO Rm 125 (COMPUTER ROOM), UNLESS OTHERWISE NOTED.
3. Rm. 227: TYPICAL REPRESENTATION OF CONNECTION PANEL ON WALL. EQUIPMENT RACK AVR03-227 NOT SHOWN FOR CLARITY. SEE AV SINGLE LINE DRAWINGS FOR CONNECTION DETAILS.
4. SEE AV FILL BOX AND FILL SCHEDULE ON SHEET E-28 TO E-37 FOR CABLE REQUIREMENTS AT EACH LOCATION.

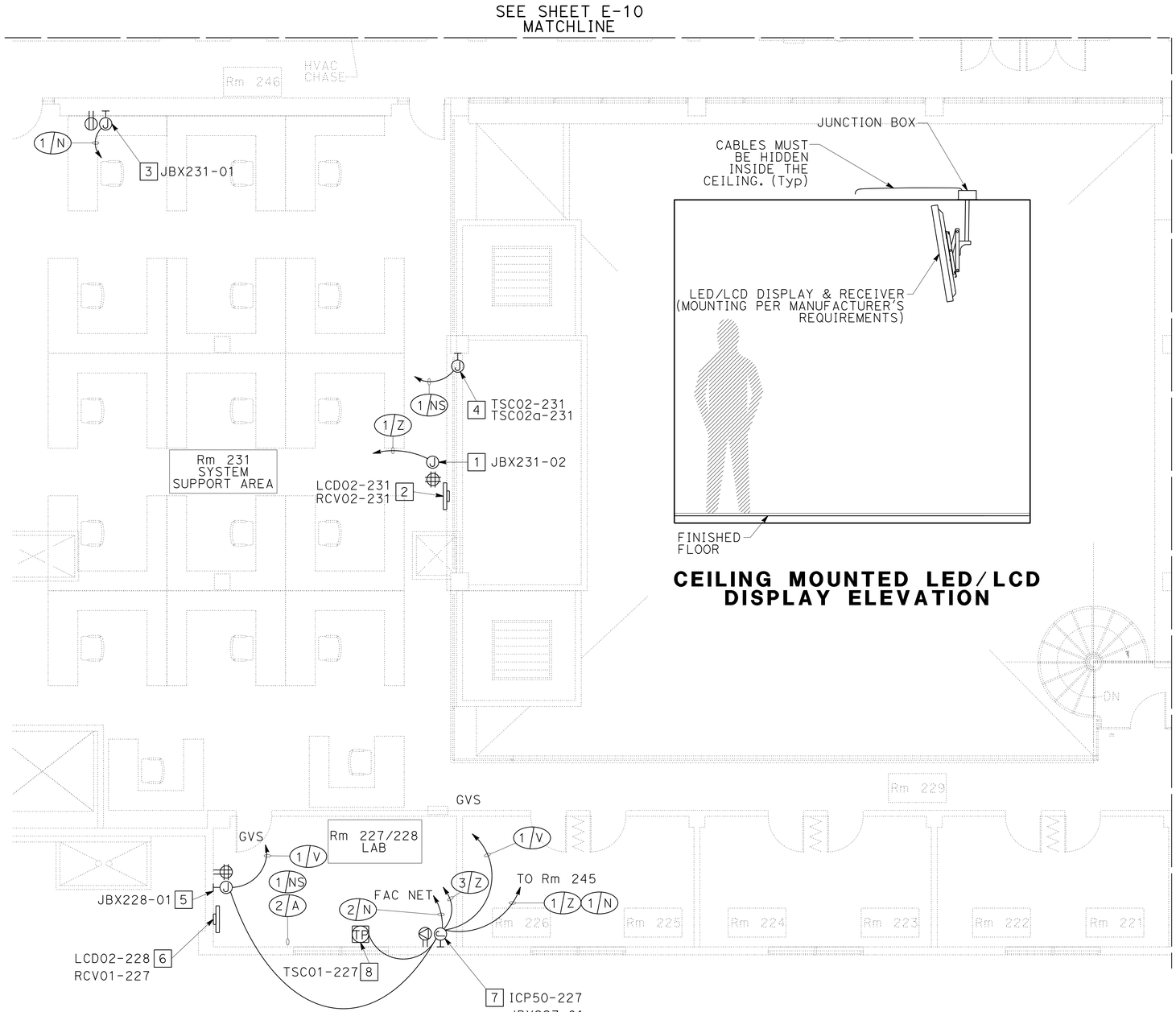

SECOND FLOOR AV PLAN

CEILING MOUNTED LED/LCD DISPLAY ELEVATION

CONSTRUCTION NOTES:

1. REMOVE Exist JUNCTION BOX. INSTALL JUNCTION BOX. SEE SHEET E-49 FOR LOCAL VIDEO DISPLAYS LINE DIAGRAM. REMOVE Exist WIRES AND CEILING TILES AS NEEDED AND/OR AS REQUESTED BY ENGINEER. REPAIR DAMAGED CEILING TILES AS NEEDED.
2. REMOVE Exist DISPLAY. INSTALL CRESTRON DM-RMC-SCALER-S DM 8G FIBER RECEIVER, LED/LCD DISPLAY, AND CEILING MOUNT. SEE SHEET E-49 FOR LOCAL VIDEO DISPLAYS LINE DIAGRAM. SEE SHEET 14 FOR ELEVATION DETAILS. SEE SHEET E-54 FOR LOCAL VIDEO SWITCHING SYSTEM LINE DIAGRAM.
3. REMOVE Exist WIRELESS ACCESS POINT. INSTALL JUNCTION BOX, CISCO AIRONET 1600 WIRELESS ACCESS POINT. SEE SHEET E-41 FOR AV NETWORK LINE DIAGRAM. FINAL LOCATION OF ACCESS POINT MUST BE APPROVED BY ENGINEER.
4. INSTALL CRESTRON BB-V15 BACK BOX FOR CRESTRON V15-WALL-B WALL MOUNT TOUCH SCREEN. SEE SHEET E-51 FOR LOCAL CONTROL SCREENS LINE DIAGRAM. REMOVE Exist CONNECTION PANEL(S) INCLUDING WIRES, PLATES AND DRYWALL AS NEEDED AND/OR AS REQUESTED BY ENGINEER. REPAIR DAMAGED WALL AS NEEDED TO MATCH Exist.
5. INSTALL JUNCTION BOX AND SDI TO HDMI MINI CONVERTER. SEE SHEET E-53 FOR LOCAL VIDEO DISPLAYS LINE DIAGRAM. REMOVE Exist CONNECTION PANEL(S) INCLUDING WIRES, PLATES AND DRYWALL AS NEEDED AND/OR AS REQUESTED BY ENGINEER. REPAIR DAMAGED WALL AS NEEDED TO MATCH Exist.
6. INSTALL CRESTRON DM-RMC-SCALER-C DM 8G+ FIBER RECEIVER AND LED/LCD DISPLAY. SEE SHEET E-53 FOR LOCAL VIDEO DISPLAYS LINE DIAGRAM. SEE SHEET 14 FOR ELEVATION DETAILS. EXACT LOCATION OF MOUNTING FOR DISPLAY MUST BE VERIFIED BY ENGINEER. SEE SHEET E-49, E-59, AND E-66 FOR LOCAL VIDEO SWITCHING SYSTEM LINE DIAGRAM.
7. REMOVE Exist CABINET AND EQUIPMENT. INSTALL JUNCTION BOX, INTERCONNECT PANNEL, AND CREDENZA RACK WITH CISCO SG300-10MP ETHERNET SWITCH, 2 CISCO MGBSX1 MINI GBIC, Exist COMPUTER, DVD/HDD RECORDER, WIRELESS CONTROL, WIRELESS ACCESS POINT, 2 WIRELESS VIDEO RECEIVERS, QSC I/O 22 DSP I/O INTERFACE, CRESTRON MP-WP-152 HDMI PASS, CRESTRON CP3 SYSTEM CONTROL, CRESTRON DM-MD8X8 VIDEO SWITCHER, 4 CRESTRON DMC-HD INPUT CARDS, CRESTRON DMC-DVI AUDIO INPUT, CRESTRON DMC-SDI INPUT CARD, CRESTRON DMC-VID-RCA A INPUT CARD, CRESTRON DMC-F FIBER INPUT CARD, CRESTRON DMCO-53 OUTPUT CARD, CRESTRON DMCO-44 OUPUT CARD, CRESTRON DM TO HDMI INTERFACE, HDMI/HD-SDI CONVERTER, CRESTRON DGE-2 DIGITAL GRAPHICS ENGINE, AND RACK CONNECTION PANNEL. SEE SHEET E-53 TO E-54 FOR LOCAL VIDEO SWITCHING SYSTEM LINE DIAGRAM. SEE SHEET E-20 FOR INTERCONNECT PANNEL DETAIL. SEE SHEET E-23 FOR RACK DETAIL. REMOVE Exist CONNECTION PANEL(S) INCLUDING WIRES, PLATES AND DRYWALL AS NEEDED AND/OR AS REQUESTED BY ENGINEER. REPAIR DAMAGED WALL AS NEEDED TO MATCH Exist.
8. REMOVE Exist TOUCH SCREEN. INSTALL CRESTRON V15 TOUCH SCREEN. SEE SHEET E-54 FOR LOCAL VIDEO SWITHCING SYSTEM LINE DIAGRAM.

AUDIO VISUAL SYSTEM (LOCATION A4)

NO SCALE

APPROVED FOR ELECTRICAL WORK ONLY

E-9

STATE OF CALIFORNIA - DEPARTMENT OF TRANSPORTATION
Caltrans
CONSULTANT FUNCTIONAL SUPERVISOR: STEVE HUFF
CALCULATED-DESIGNED BY: JOSHUA MCNEILL
CHECKED BY: RANDY RATZLAFF
REVISED BY
DATE REVISED

LAST REVISION 04-01-15 | DATE PLOTTED => 13-MAY-2015 | TIME PLOTTED => 08:48

Dist	COUNTY	LOCATION	POST MILES TOTAL PROJECT	SHEET No.	TOTAL SHEETS
12	Ora	Var		11	91

REGISTERED CIVIL ENGINEER — DATE 2-25-15

May 04, 2015
PLANS APPROVAL DATE

REGISTERED PROFESSIONAL ENGINEER — CARLOS ORTIZ — No. 57535 — Exp. 12-31-15 — CIVIL — STATE OF CALIFORNIA

THE STATE OF CALIFORNIA OR ITS OFFICERS OR AGENTS SHALL NOT BE RESPONSIBLE FOR THE ACCURACY OR COMPLETENESS OF SCANNED COPIES OF THIS PLAN SHEET.

RBF CONSULTING
14725 ALTON PKWY
IRVINE, CA 92618

NOTES:

1. SEE SHEETS E-2, E-3 & E-4 FOR GENERAL NOTES, ABBREVIATIONS AND LEGEND.
2. ALL CABLE HOMERUNS TO Rm 125 (COMPUTER ROOM), UNLESS OTHERWISE NOTED.
3. Rm 245 IDF: ASSUME ALL CABLE TO END DEVICES ON THE SECOND FLOOR EITHER TERMINATES AT AN ETHERNET SWITCH LOCATED HERE OR PASSES THROUGH THIS CLOSET, TO Rm 141 BELOW AND ONTO Rm 125 (COMPUTER ROOM) AS AN UNINTERRUPTED HOMERUN. SEE AV SINGLE LINE DRAWINGS FOR FURTHER DETAIL.
4. JBX242-01: FLUSH MOUNT ON WALL WITH CABLE PASS-THROUGH HOLE. ALL CABLES TO TERMINATE TO EQUIPMENT INSTALLED IN SMALL RACKS IN EXISTING FURNITURE.
5. JUNCTION BOXES, PANELS AND ANTENNAE FOR THE WIRELESS MICROPHONES TO BE INSTALLED ABOVE CEILING TILES.
6. SEE AV FILL BOX AND FILL SCHEDULE ON SHEET E-28 TO E-37 FOR CABLE REQUIREMENTS AT EACH LOCATION.

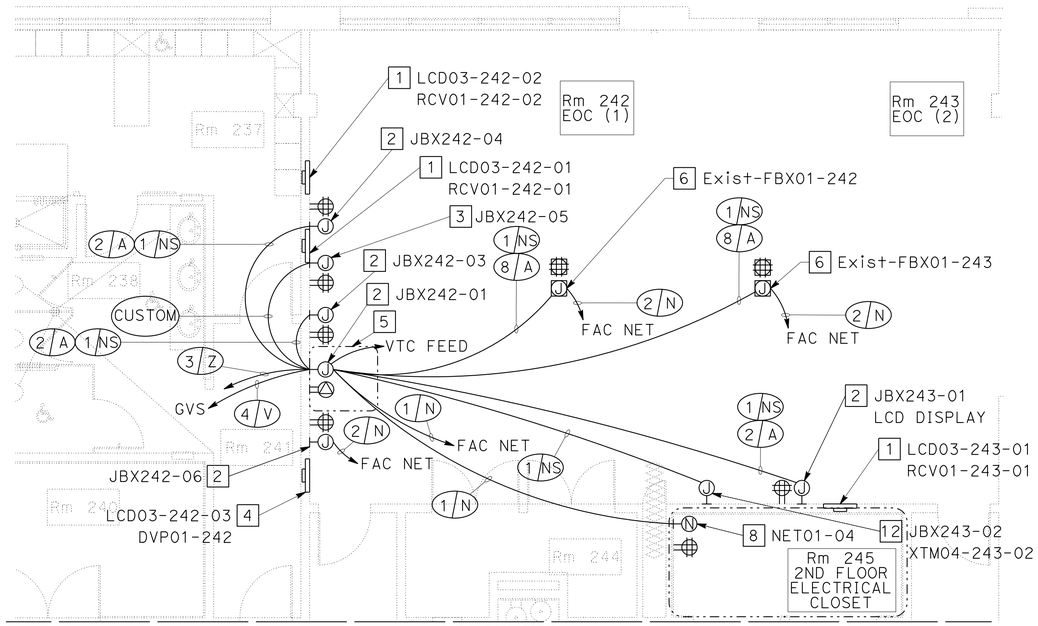

MATCHLINE
SEE SHEET E-9

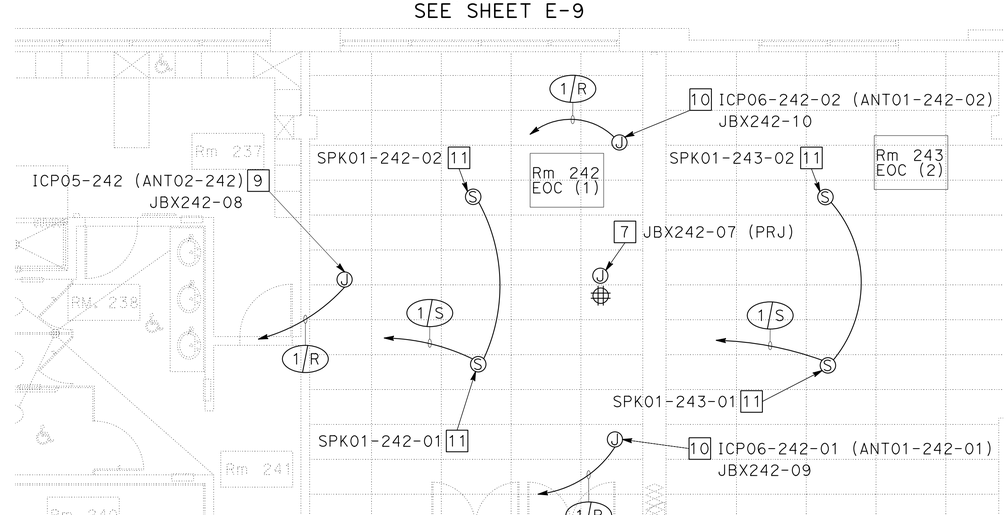

MATCHLINE
SEE SHEET E-9

CONSTRUCTION NOTES:

1. REMOVE Exist MONITOR. INSTALL CRESTRON DM-RMC-SCALER-C DM 8G+ RECEIVER, LED/LCD DISPLAY AND DISPLAY 2 SPEAKERS. SEE SHEET 14 FOR ELEVATION DETAILS. SEE SHEET E-54 FOR LOCAL VIDEO SWITCHING SYSTEM LINE DIAGRAM.
2. INSTALL JUNCTION BOX. SEE SHEET E-52 THRU E-54 FOR LOCAL VIDEO SWITCHING SYSTEM LINE DIAGRAM. REMOVE Exist CONNECTION PANEL(S) INCLUDING WIRES, PLATES AND DRYWALL AS NEEDED AND/OR AS REQUESTED BY ENGINEER. REPAIR DAMAGED WALL AS NEEDED TO MATCH Exist.
3. INSTALL JUNCTION BOX AND CONNECT TO Exist POLYCOM CAMERA. SEE SHEET E-52 FOR LOCAL VIDEO SWITCHING SYSTEM LINE DIAGRAM. REMOVE Exist CONNECTION PANEL(S) INCLUDING WIRES, PLATES AND DRYWALL AS NEEDED AND/OR AS REQUESTED BY ENGINEER. REPAIR DAMAGED WALL AS NEEDED TO MATCH Exist.
4. REMOVE Exist SIGNAGE PLAYER. INSTALL HD DIGITAL SIGNAGE PLAYER AND 80" LED/LCD DISPLAY. SEE SHEET E-53 FOR LOCAL VIDEO SWITCHING SYSTEM LINE DIAGRAM. PROTECT THEM IN PLACE Exist DISTRICT 12 SIGN.
5. REMOVE Exist TOUCH SCREEN AND DOCUMENT CAMERA. INSTALL SLIDE OUT ROTATING RAILS IN Exist FURNITURE WITH QSC I/O FRAME, 4 CIML4 INPUT CARDS, CISCO SG300-10MP ETHERNET SWITCH, 2 CISCO MINI GBIC, WIRELESS ACCESS POINT, CRESTRON CP3 SYSTEM CONTROL, LIGHTING CONTROL, Exist COMPUTER, DVI TO HDMI CONVERTER, WIRELESS VIDEO RECEIVER, WIRELESS CONTROL, Exist POLYCOM VIDEO CONFERENCE, CRESTRON VGA TO DM INTERFACE MODULE, DVD/HDD RECORDER, DSP I/O INTERFACE, CRESTRON DM-MD16X16 DIGITAL VIDEO SWITCH, CRESTRON DMC-F FIBER INPUT CARD, 3 CRESTRON DMC-HD INPUT CARDS, 7 CRESTRON DMC-C INPUT CARDS, CRESTRON DMC-VID-RCA-A INPUT CARD, 4 CRESTRON DMC-SDI INPUT CARD, CRESTRON DMCO-5554 OUTPUT CARD, CRESTRON DMCO-3333 OUTPUT CARD, CRESTRON DGE-2 DIGITAL GRAPHICS ENGINE, CRESTRON V15 TOUCH SCREEN, DOCUMENT CAMERA, HDMI/HD-SDI CONVERTER, DOCUMENT CAMERA, 2 POP UP TABLE BOX (BLACK) WITH CRESTRON DM-TX-200-C-2G COMPUTER INTERFACES. SEE SHEET E-23 FOR RACK DETAIL. SEE SHEET E-55 TO E-58 FOR LOCAL VIDEO SWITCHING SYSTEM LINE DIAGRAM.
6. INSTALL INTERCONNECT PANEL AND CRESTRON DM-TX-200-C-2G COMPUTER INTERFACE IN EXISTING FLOOR BOX. INSTALL 8 TABLE MICS. SEE SHEET E-25 FOR INTERCONNECT PANEL DETAILS. SEE SHEET E-51 FOR FLOOR BOX CONNECTIONS. REMOVE Exist CONNECTION PANEL(S) INCLUDING WIRES AND PLATES AS NEEDED AND/OR AS REQUESTED BY ENGINEER.
7. INSTALL JUNCTION BOX AND CRESTRON DM-RMC-SCALER-C DM 8G+ RECEIVER. CONNECT TO Exist PROJECTOR. SEE SHEET E-58 FOR LOCAL VIDEO SWITCHING SYSTEM LINE DIAGRAM. REMOVE Exist WIRES AND CEILING TILES AS NEEDED AND/OR AS REQUESTED BY ENGINEER. REPAIR DAMAGED CEILING TILES AS NEEDED.
8. INSTALL CISCO SG500-52 ETHERNET SWITCH AND 5 CISCO MGBSX1 MINI GBIC. SEE SHEET E-40 FOR AV NETWORK LINE DIAGRAM.
9. REMOVE Exist ANTENNA. INSTALL JUNCTION BOX, INTERCONNECT PANEL, AND ANTENNA. SEE SHEET E-47 FOR TOURGUIDE SYSTEM LINE DIAGRAM. REMOVE Exist WIRES AND CEILING TILES AS NEEDED AND/OR AS REQUESTED BY ENGINEER. REPAIR DAMAGED CEILING TILES AS NEEDED.
10. REMOVE Exist ANTENNA. INSTALL JUNCTION BOX, INTERCONNECT PANEL, WIRELESS MIC ANTENNA, AND LAPEL MIC. SEE SHEET E-47 FOR TOURGUIDE SYSTEM LINE DIAGRAM. REMOVE Exist WIRES AND CEILING TILES AS NEEDED AND/OR AS REQUESTED BY ENGINEER. REPAIR DAMAGED CEILING TILES AS NEEDED.
11. REMOVE Exist SPEAKER. INSTALL CEILING SPEAKER. SEE SHEET E-45 FOR TMC OPS FLOOR AND CONFERENCE ROOM AUDIO LINE DIAGRAM.
12. INSTALL JUNCTION BOX AND CRESTRON DM-TX-200-C-2G COMPUTER INTERFACE. SEE SHEET E-47 FOR VIDEO SWITCHING SYSTEM LINE DIAGRAM. REMOVE Exist CONNECTION PANEL(S) INCLUDING WIRES, PLATES AND DRYWALL AS NEEDED AND/OR AS REQUESTED BY ENGINEER. REPAIR DAMAGED WALL AS NEEDED TO MATCH Exist.

SECOND FLOOR AV PLAN

AUDIO VISUAL SYSTEM (LOCATION A5)

NO SCALE

APPROVED FOR ELECTRICAL WORK ONLY

E-10

REVISED BY	DATE REVISED
JOSHUA MCNEILL	RANDY RATZLAFF
CALCULATED-DESIGNED BY	CHECKED BY
CONSULTANT FUNCTIONAL SUPERVISOR	STEVE HUFF

STATE OF CALIFORNIA - DEPARTMENT OF TRANSPORTATION — Caltrans

LAST REVISION 04-01-15 | DATE PLOTTED => 13-MAY-2015 | TIME PLOTTED => 08:48

Dist	COUNTY	LOCATION	POST MILES TOTAL PROJECT	SHEET No.	TOTAL SHEETS
12	Ora	Var		12	91

REGISTERED CIVIL ENGINEER — DATE 2-25-15

May 04, 2015
PLANS APPROVAL DATE

REGISTERED PROFESSIONAL ENGINEER — CARLOS ORTIZ — No. 57535 — Exp. 12-31-15 — CIVIL — STATE OF CALIFORNIA

THE STATE OF CALIFORNIA OR ITS OFFICERS OR AGENTS SHALL NOT BE RESPONSIBLE FOR THE ACCURACY OR COMPLETENESS OF SCANNED COPIES OF THIS PLAN SHEET.

RBF CONSULTING
14725 ALTON PKWY
IRVINE, CA 92618

NOTES:

1. SEE SHEETS E-2, E-3 & E-4 FOR GENERAL NOTES, ABBREVIATIONS AND LEGEND.
2. ALL CABLE HOMERUNS TO Rm 125 (COMPUTER ROOM), UNLESS OTHERWISE NOTED.
3. VERIFY LOCATIONS OF EACH TOUCH SCREEN SHOWN IN THE PERIMETER OFFICES. ASSUME CABLE WILL TAKE THE SHORTEST ROUTE FROM Rm 125 TO THESE LOCATIONS TO PRESERVE THE DISTANCE LIMITATION OF CRESTRON DM 8G+ CABLE.

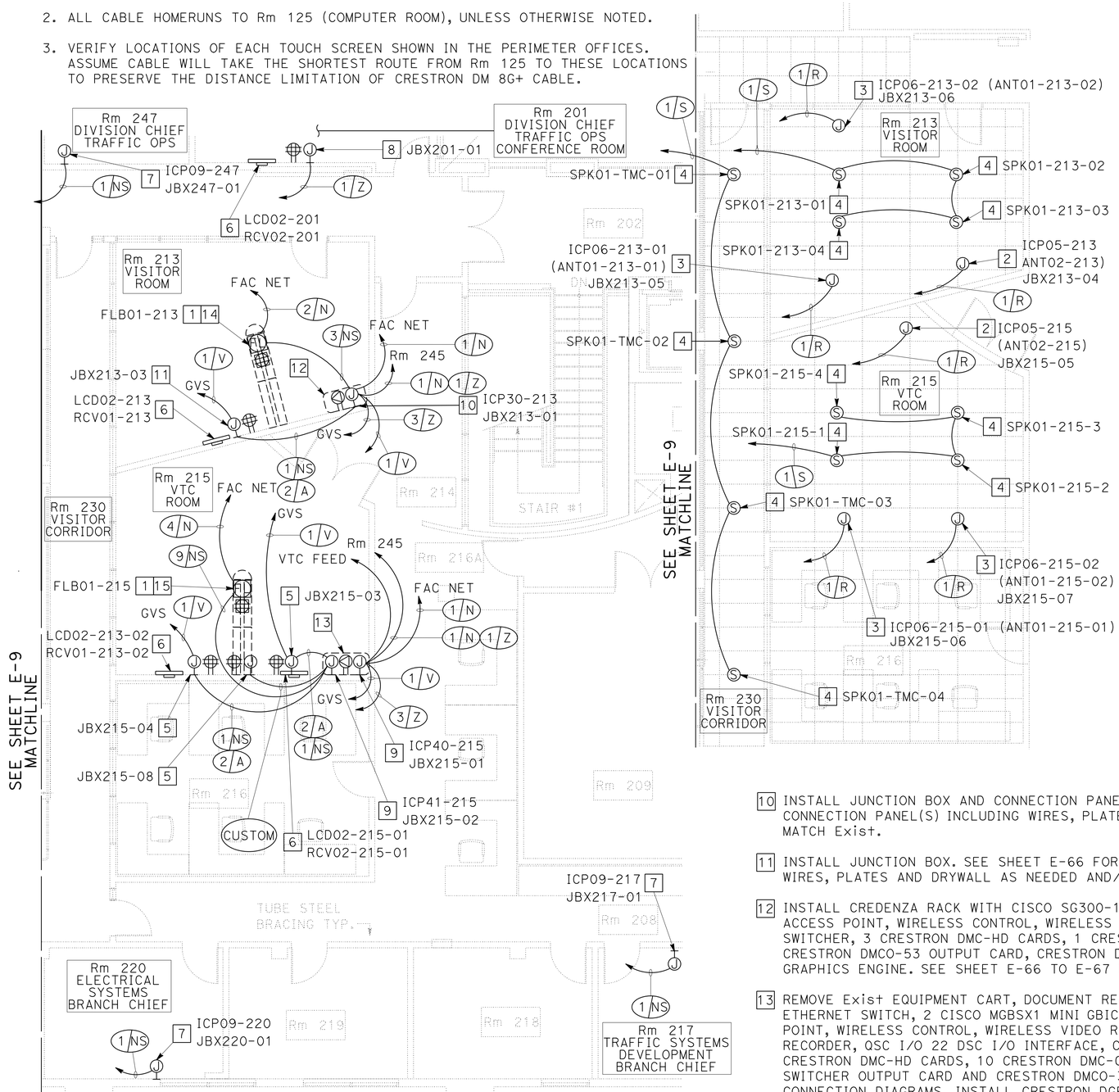

SECOND FLOOR AV PLAN

CONSTRUCTION NOTES:

1. REMOVE Exist FLOOR STRIP AND WIRES. REPAIR DAMAGED CARPET AND MATCH IN KIND. STRAP AND MANAGE CABLES. PROTECT IN PLACE SPEAKER PHONE, TABLE, CHAIRS, AND OTHER FURNITURE. COVER TABLES, CHAIRS, AND OTHER FURNITURE. REPLACE ALL FURNITURE DAMAGED DURING CONSTRUCTION. INSTALL AV TRACK FLOOR CONNECTION AND CRESTRON V15 TOUCH SCREEN. SEE SHEET E-67 TO E-70 FOR LOCAL AV TRACK CONNECTIONS LINE DIAGRAM.
2. REMOVE AND SALVAGE Exist ANTENNA. INSTALL JUNCTION BOX, INTERCONNECT PANEL AND ANTENNA. SEE SHEET E-47 FOR CONFERENCE ROOM VOICE ASSIST AND FACILITY TOURGUIDE SYSTEM LINE DIAGRAM DIAGRAM.
3. REMOVE Exist ANTENNA. INSTALL JUNCTION BOX, INTERCONNECT PANEL, ANTENNA AND LAPEL MIC. SEE SHEET E-47 FOR CONFERENCE ROOM VOICE ASSIST AND FACILITY TOURGUIDE SYSTEM LINE DIAGRAM DIAGRAM.
4. REMOVE Exist SPEAKER. INSTALL CEILING SPEAKER. SEE SHEET E-45 FOR NETWORK AUDIO SYSTEM LINE DIAGRAM. VOLUME CONTROL MUST BE MAINTAINED AND TESTED.
5. INSTALL JUNCTION BOX. SEE SHEET E-59 FOR RM. 215 LOCAL VIDEO SWITCHER SYSTEM LINE DIAGRAM. REMOVE Exist CONNECTION PANEL(S) INCLUDING WIRES, PLATES AND DRYWALL AS NEEDED AND/OR AS REQUESTED BY ENGINEER. REPAIR DAMAGED WALL AS NEEDED TO MATCH Exist.
6. REMOVE Exist DISPLAYS, MOUNTING AND CABLES. INSTALL CRESTRON DM-RMC-SCALER-S DM 8G+ RECEIVER, SDI TO HDMI MINI CONVERTER, AND LED/LCD DISPLAY. SEE SHEET 14 FOR ELEVATION DETAILS. SEE SHEET E-49, E-59, AND E-66 FOR LOCAL VIDEO SWITCHING SYSTEM LINE DIAGRAM.
7. INSTALL JUNCTION BOX, INTERCONNECT PANEL AND CRESTRON V15 TOUCH SCREEN. SEE SHEET E-51 FOR LOCAL CONTROL SCREENS LINE DIAGRAM. REMOVE Exist CONNECTION PANEL(S) INCLUDING WIRES, PLATES AND DRYWALL AS NEEDED AND/OR AS REQUESTED BY ENGINEER. REPAIR DAMAGED WALL AS NEEDED TO MATCH Exist.
8. INSTALL JUNCTION BOX. SEE SHEET E-49 FOR LOCAL VIDEO DISPLAY LINE DIAGRAM. REMOVE Exist CONNECTION PANEL(S) INCLUDING WIRES, PLATES AND DRYWALL AS NEEDED AND/OR AS REQUESTED BY ENGINEER. REPAIR DAMAGED WALL AS NEEDED TO MATCH Exist.
9. INSTALL JUNCTION BOX AND CONNECTION PANEL. SEE SHEET E-59 AND E-56 FOR Rm 215 LOCAL VIDEO SWITCHING SYSTEM LINE DIAGRAM. REMOVE Exist CONNECTION PANEL(S) INCLUDING WIRES, PLATES AND DRYWALL AS NEEDED AND/OR AS REQUESTED BY ENGINEER. REPAIR DAMAGED WALL AS NEEDED TO MATCH Exist.
10. INSTALL JUNCTION BOX AND CONNECTION PANEL. SEE SHEET E-66 TO E-69 FOR Rm 213 LOCAL VIDEO SWITCHING SYSTEM LINE DIAGRAM. REMOVE Exist CONNECTION PANEL(S) INCLUDING WIRES, PLATES AND DRYWALL AS NEEDED AND/OR AS REQUESTED BY ENGINEER. REPAIR DAMAGED WALL AS NEEDED TO MATCH Exist.
11. INSTALL JUNCTION BOX. SEE SHEET E-66 FOR Rm 213 LOCAL VIDEO SWITCHING SYSTEM LINE DIAGRAM. REMOVE Exist CONNECTION PANEL(S) INCLUDING WIRES, PLATES AND DRYWALL AS NEEDED AND/OR AS REQUESTED BY ENGINEER. REPAIR DAMAGED WALL AS NEEDED TO MATCH Exist.
12. INSTALL CREDENZA RACK WITH CISCO SG300-10MP ETHERNET SWITCH, 2 CISCO MGBSX1 MINI GBIC, Exist COMPUTER, DVD/HD RECORDER, WIRELESS ACCESS POINT, WIRELESS CONTROL, WIRELESS VIDEO RECEIVER, DSP I/O INTERFACE, CRESTRON CP3 SYSTEM CONTROL, CRESTRON DM-MD8X8 VIDEO SWITCHER, 3 CRESTRON DMC-HD CARDS, 1 CRESTRON DMC-DVI CARD, 2 CRESTRON DMC-C CARDS, CRESTRON DMC-SDI CARD, CRESTRON DMC-F CARD, CRESTRON DMCO-53 OUTPUT CARD, CRESTRON DMCO-44 OUTPUT CARD, CRESTRON DM TO HDMI INTERFACE, HDMI/HD-SDI CONVERTER, AND CRESTRON DIGITAL GRAPHICS ENGINE. SEE SHEET E-66 TO E-67 FOR Rm 213 LOCAL VIDEO SWITCHING SYSTEM DIAGRAMS. SEE SHEET E-22 FOR RACK DIAGRAM.
13. REMOVE Exist EQUIPMENT CART, DOCUMENT READER, CRESTRON MODULE, AND EXTRON AMPLIFIER. INSTALL CREDENZA RACK WITH CISCO SG300-10MP ETHERNET SWITCH, 2 CISCO MGBSX1 MINI GBIC, Exist COMPUTER, Exist LCD DISPLAY, Exist KEYBOARD, DVD TO HDMI CONVERTER, WIRELESS ACCESS POINT, WIRELESS CONTROL, WIRELESS VIDEO RECEIVER, Exist POLYCOM VSX 8000 VIDEO CONFERENCE, 2 CRESTRON INTERFACE MODULES, 1 DVD/HDD RECORDER, QSC I/O 22 DSC I/O INTERFACE, CRESTRON CP3 SYSTEM CONTROL, CRESTRON DM-MD8X8 VIDEO SWITCHER, CRESTRON DMC-F CARD, 3 CRESTRON DMC-HD CARDS, 10 CRESTRON DMC-C CARDS, CRESTRON DMC-VID-RCA-A CARD, CRESTRON DMC-SDI CARD, CRESTRON DMCO-5554 DIGITAL MEDIA SWITCHER OUTPUT CARD AND CRESTRON DMCO-3333 DIGITAL MEDIA SWITCHER OUTPUT CARD. SEE SHEET E-59 TO E-62 FOR Rm 215 LOCAL AV TRACK CONNECTION DIAGRAMS. INSTALL CRESTRON DGE-2 DIGITAL GRAPHICS ENGINE, CRESTRON INTERFACE MODULE, AND HDMI-HD-SDI CONVERTER. SEE SHEET E-22 FOR RACK DIAGRAM.
14. INSTALL POP UP TABLE BOX (BLACK) WITH 2 CRESTRON MP-WP-183 AND CRESTRON DM-TX-200-C-2G ON CALTRANS FURNISHED TABLE. SEE SHEET E-68 FOR LOCAL AV TRACK CONNECTIONS LINE DIAGRAM.

CONSTRUCTION NOTES (CONTINUED):

15. REMOVE Exist EQUIPMENT IN POP UP BOX. INSTALL 4 CRESTRON-MP-WP-183, 4 CRESTRON DM-TX1-1G, AND 4 CRESTRON DM-TX-200-C-2G IN Exist 2 POP UP TABLE BOXES. SEE SHEET E-61 TO E-62 FOR LOCAL AV TRACK CONNECTIONS LINE DIAGRAM.

AUDIO VISUAL SYSTEM (LOCATION A6)

NO SCALE

APPROVED FOR ELECTRICAL WORK ONLY

E-11

STATE OF CALIFORNIA - DEPARTMENT OF TRANSPORTATION
Caltrans
CONSULTANT FUNCTIONAL SUPERVISOR: STEVE HUFF
CALCULATED-DESIGNED BY: RANDY RATZLAFF
CHECKED BY: JOSHUA MCNEILL
REVISED BY
DATE REVISED

LAST REVISION 04-01-15
DATE PLOTTED => 13-MAY-2015
TIME PLOTTED => 08:48

Dist	COUNTY	LOCATION	POST MILES TOTAL PROJECT	SHEET No.	TOTAL SHEETS
12	Ora	Var		13	91

REGISTERED CIVIL ENGINEER 2-25-15 DATE

May 04, 2015
PLANS APPROVAL DATE

REGISTERED PROFESSIONAL ENGINEER CARLOS ORTIZ No. 57535 Exp. 12-31-15 CIVIL STATE OF CALIFORNIA

THE STATE OF CALIFORNIA OR ITS OFFICERS OR AGENTS SHALL NOT BE RESPONSIBLE FOR THE ACCURACY OR COMPLETENESS OF SCANNED COPIES OF THIS PLAN SHEET.

RBF CONSULTING
14725 ALTON PKWY
IRVINE, CA 92618

NOTES:

1. SEE SHEETS E-2, E-3 & E-4 FOR GENERAL NOTES, ABBREVIATIONS AND LEGEND.
2. FOR COORDINATION WITH UCI CONTACT PROFESSOR STEVE RITCHIE, (949) 824-4214.
3. THERE MUST BE NO IP CONNECTIONS BETWEEN THE UCI NETWORK AND THE TMC NETWORK CORE. CONNECTIONS MUST BE ISOLATED TO THE CALTRANS TMC AV NETWORK.

CONSTRUCTION NOTES:

1. REMOVE AND SALVAGE Exist TOUCH SCREEN. INSTALL CRESTRON V15 TOUCH SCREEN.
2. INSTALL CRESTRON DGE-2 DIGITAL GRAPHICS ENGINE. MAKE CONNECTIONS TO Exist ETHERNET SWITCH PER BLOCK DIAGRAM ON SHEET E-52.

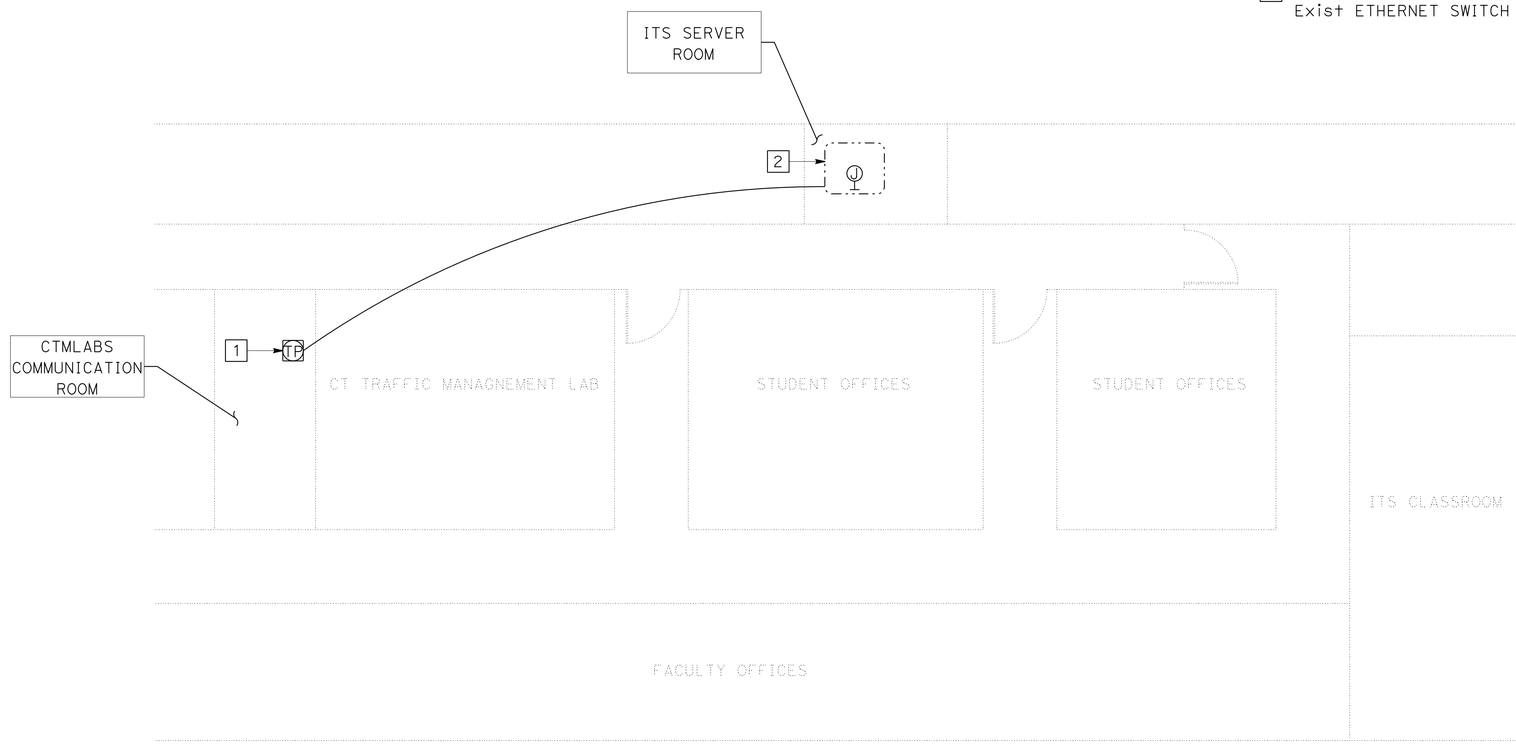

UCI ANTEATER INSTRUCTION AND RESEARCH BUILDING (AIRB) 4TH FLOOR

AUDIO VISUAL SYSTEM (LOCATION B1)

NO SCALE

APPROVED FOR ELECTRICAL WORK ONLY

E-12

STATE OF CALIFORNIA - DEPARTMENT OF TRANSPORTATION
Caltrans

CONSULTANT FUNCTIONAL SUPERVISOR: STEVE HUFF
CALCULATED-DESIGNED BY: JOSHUA MCNEILL
CHECKED BY: RANDY RATZLAFF
REVISED BY
DATE REVISED

LAST REVISION 04-01-15
DATE PLOTTED => 13-MAY-2015
TIME PLOTTED => 08:48

Dist	COUNTY	LOCATION	POST MILES TOTAL PROJECT	SHEET No.	TOTAL SHEETS
12	Ora	Var		14	91

REGISTERED CIVIL ENGINEER 2-25-15 DATE

May 04, 2015
PLANS APPROVAL DATE

REGISTERED PROFESSIONAL ENGINEER CARLOS ORTIZ No. 57535 Exp. 12-31-15 CIVIL STATE OF CALIFORNIA

THE STATE OF CALIFORNIA OR ITS OFFICERS OR AGENTS SHALL NOT BE RESPONSIBLE FOR THE ACCURACY OR COMPLETENESS OF SCANNED COPIES OF THIS PLAN SHEET.

RBF CONSULTING
14725 ALTON PKWY
IRVINE, CA 92618

NOTES:

1. SEE SHEETS E-2, E-3 & E-4 FOR GENERAL NOTES, ABBREVIATIONS AND LEGEND.
2. ALL CABLE HOMERUNS TO Rm 125 (COMPUTER ROOM), UNLESS OTHERWISE NOTED.

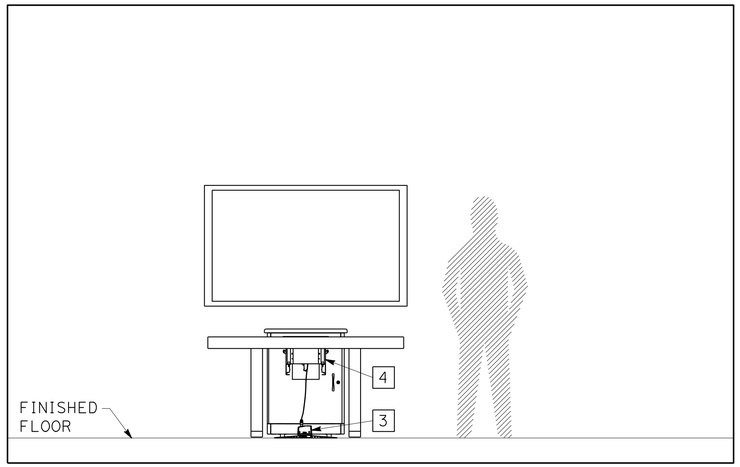

TYPICAL LED/LCD DISPLAY FRONT ELEVATION

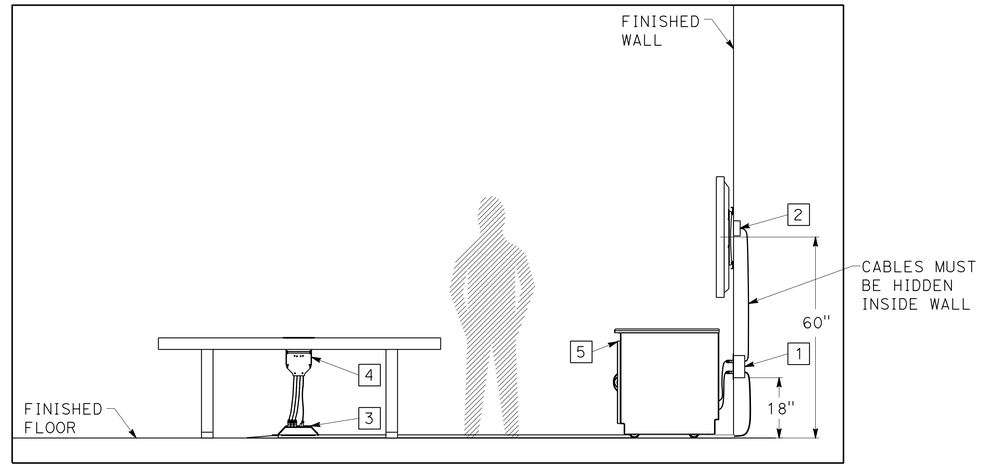

TYPICAL LED/LCD DISPLAY SIDE ELEVATION

CONSTRUCTION NOTES:

1. INSTALL RECESSED JUNCTION BOX FOR RACK CONNECTION PANEL. SEE E-24 THRU E-27 FOR ROOM SPECIFIC PANEL DETAILS.
2. INSTALL RECESSED JUNCTION BOX FOR VIDEO DISPLAY LOW VOLTAGE CABLE. SEE E-24 THRU E-27 FOR ROOM SPECIFIC PANEL DETAILS AND E-8 THRU E-11 FOR ROOM SPECIFIC ELEVATIONS.
3. INSTALL FLOOR-MOUNTED RACEWAY FOR CABLE MANAGEMENT AND CONNECTION POINTS ALONG CARPETED FLOOR.
4. INSTALL POP-UP RECESSED TABLE BOX CONTAINING CRESTRON INTERFACE AND CONNECTORS AS NEEDED. SEE E-24 THRU E-27 FOR ROOM SPECIFIC PANEL DETAILS.
5. INSTALL RACK ENCLOSURE WITH WHEELS. SEE E-22 AND E-23 FOR RACK ELEVATIONS.

APPROVED FOR ELECTRICAL WORK ONLY

ELECTRICAL DETAILS
(CONFERENCE ROOM ELEVATION)

NO SCALE

E-13

STATE OF CALIFORNIA - DEPARTMENT OF TRANSPORTATION
Caltrans
CONSULTANT FUNCTIONAL SUPERVISOR: STEVE HUFF
CALCULATED-DESIGNED BY: JOSHUA MCNEILL
CHECKED BY: RANDY RATZLAFF
REVISED BY
DATE REVISED

LAST REVISION 04-01-15
DATE PLOTTED => 13-MAY-2015
TIME PLOTTED => 08:48

Dist	COUNTY	LOCATION	POST MILES TOTAL PROJECT	SHEET No.	TOTAL SHEETS
12	Ora	Var		15	91

REGISTERED CIVIL ENGINEER 2-25-15 DATE

May 04, 2015
PLANS APPROVAL DATE

REGISTERED PROFESSIONAL ENGINEER CARLOS ORTIZ No. 57535 Exp. 12-31-15 CIVIL STATE OF CALIFORNIA

THE STATE OF CALIFORNIA OR ITS OFFICERS OR AGENTS SHALL NOT BE RESPONSIBLE FOR THE ACCURACY OR COMPLETENESS OF SCANNED COPIES OF THIS PLAN SHEET.

RBF CONSULTING
14725 ALTON PKWY
IRVINE, CA 92618

NOTES:

1. SEE SHEETS E-2, E-3 & E-4 FOR GENERAL NOTES, ABBREVIATIONS AND LEGEND.
2. SEE SHEETS S-1 TO S-XX FOR STRUCTURAL PLAN.
3. SEE VIDEO WALL STRUCTURAL PLANS FOR VIDEO WALL DETAILS.

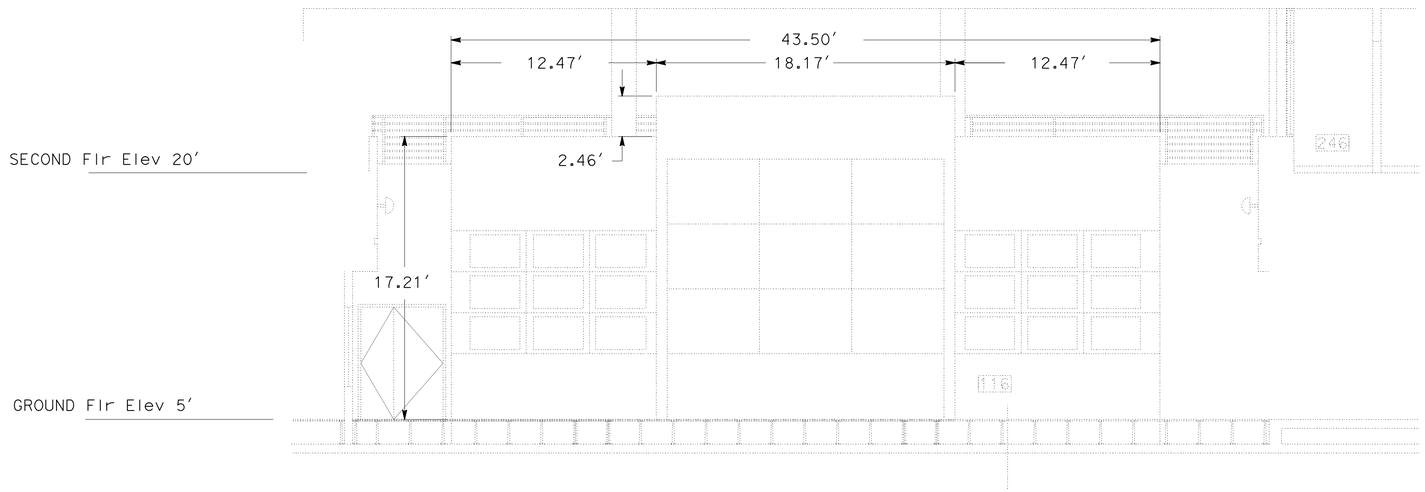

EXISTING TMC VIDEO WALL ELEVATION

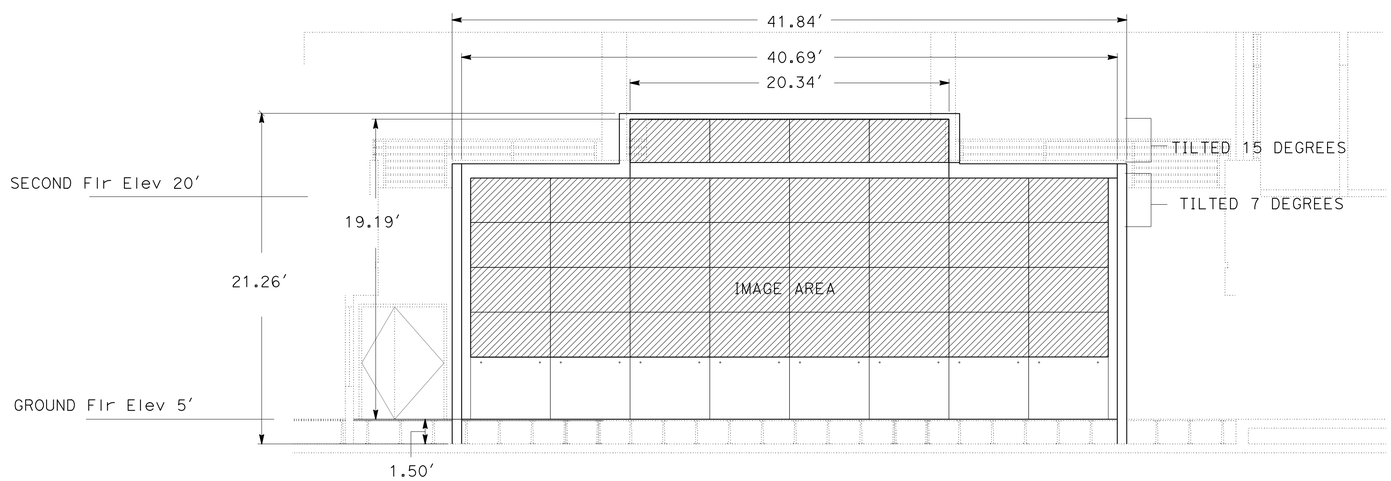

PROPOSED TMC VIDEO WALL ELEVATION

APPROVED FOR ELECTRICAL WORK ONLY

ELECTRICAL DETAILS
(TMC WALL ELEVATION)

NO SCALE

E-14

STATE OF CALIFORNIA - DEPARTMENT OF TRANSPORTATION
Caltrans

CONSULTANT FUNCTIONAL SUPERVISOR: STEVE HUFF
CALCULATED-DESIGNED BY: JOSHUA MCNEILL
CHECKED BY: RANDY RATZLAFF
REVISED BY
DATE REVISED

LAST REVISION 04-01-15
DATE PLOTTED => 13-MAY-2015
TIME PLOTTED => 08:48

Dist	COUNTY	LOCATION	POST MILES TOTAL PROJECT	SHEET No.	TOTAL SHEETS
12	Ora	Var		16	91

REGISTERED CIVIL ENGINEER — DATE 2-25-15

May 04, 2015
PLANS APPROVAL DATE

REGISTERED PROFESSIONAL ENGINEER — CARLOS ORTIZ — No. 57535 — Exp. 12-31-15 — CIVIL — STATE OF CALIFORNIA

THE STATE OF CALIFORNIA OR ITS OFFICERS OR AGENTS SHALL NOT BE RESPONSIBLE FOR THE ACCURACY OR COMPLETENESS OF SCANNED COPIES OF THIS PLAN SHEET.

RBF CONSULTING
14725 ALTON PKWY
IRVINE, CA 92618

NOTES:

1. SEE SHEETS E-2, E-3 & E-4 FOR GENERAL NOTES, ABBREVIATIONS AND LEGEND.
2. PROVIDE PVC ISOLATION COUPLING ON ALL RACK CONDUIT PENETRATIONS.
3. ONLY TWO RACKS SHOWN FOR CLARITY.

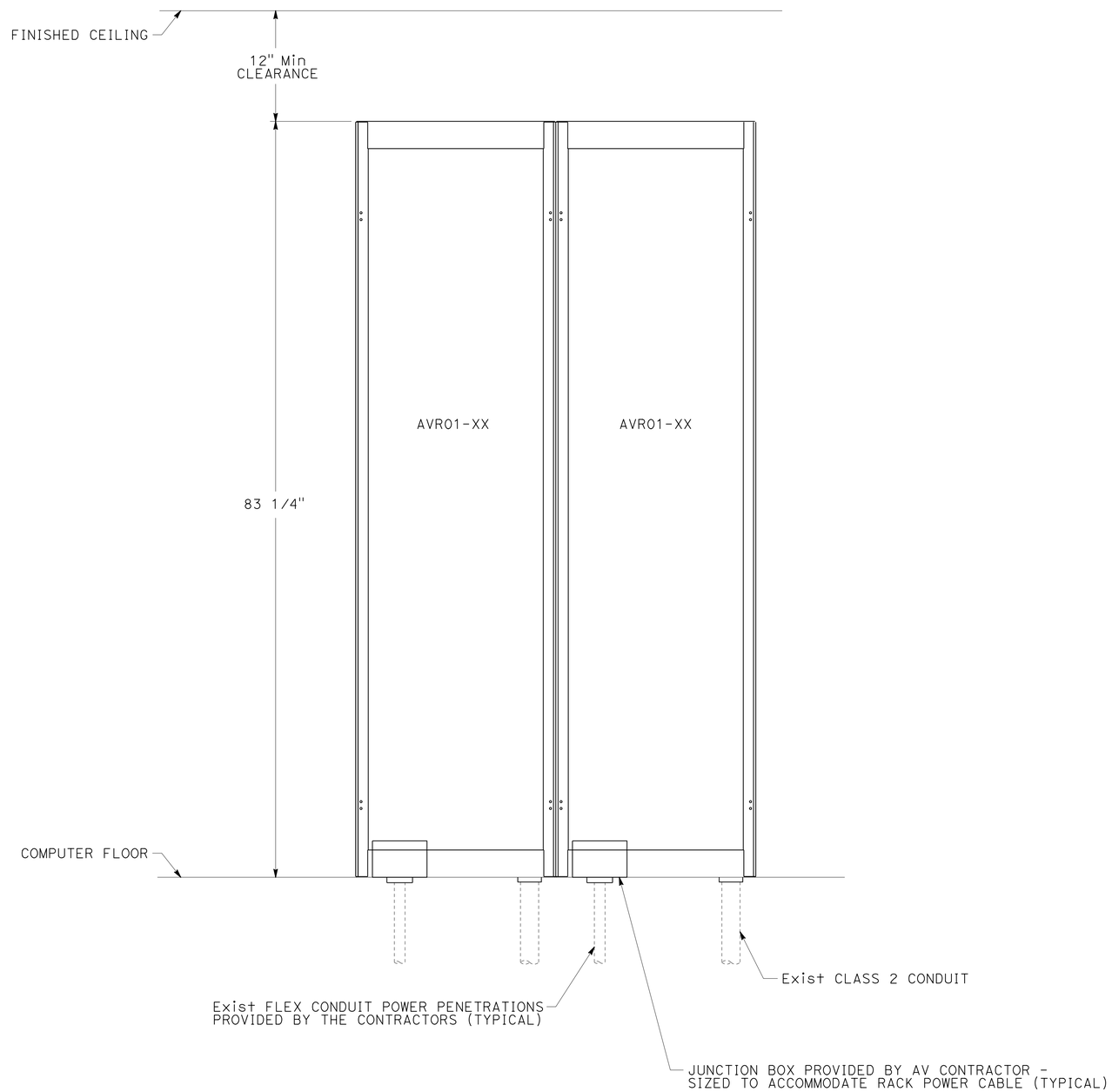

AV EQUIPMENT RACK INSTALLATION DETAIL

ELECTRICAL DETAILS
(RACK DETAIL)

NO SCALE

APPROVED FOR ELECTRICAL WORK ONLY

E-15

STATE OF CALIFORNIA - DEPARTMENT OF TRANSPORTATION
Caltrans

CONSULTANT FUNCTIONAL SUPERVISOR: STEVE HUFF
CALCULATED-DESIGNED BY: JOSHUA MCNEILL
CHECKED BY: RANDY RATZLAFF
REVISED BY
DATE REVISED

LAST REVISION 04-01-15
DATE PLOTTED => 13-MAY-2015
TIME PLOTTED => 08:48

Dist	COUNTY	LOCATION	POST MILES TOTAL PROJECT	SHEET No.	TOTAL SHEETS
12	Ora	Var		17	91

REGISTERED CIVIL ENGINEER 2-25-15 DATE

May 04, 2015
PLANS APPROVAL DATE

REGISTERED PROFESSIONAL ENGINEER CARLOS ORTIZ No. 57535 Exp. 12-31-15 CIVIL STATE OF CALIFORNIA

THE STATE OF CALIFORNIA OR ITS OFFICERS OR AGENTS SHALL NOT BE RESPONSIBLE FOR THE ACCURACY OR COMPLETENESS OF SCANNED COPIES OF THIS PLAN SHEET.

RBF CONSULTING
14725 ALTON PKWY
IRVINE, CA 92618

NOTES:

1. SEE SHEETS E-2, E-3 & E-4 FOR GENERAL NOTES, ABBREVIATIONS AND LEGEND.

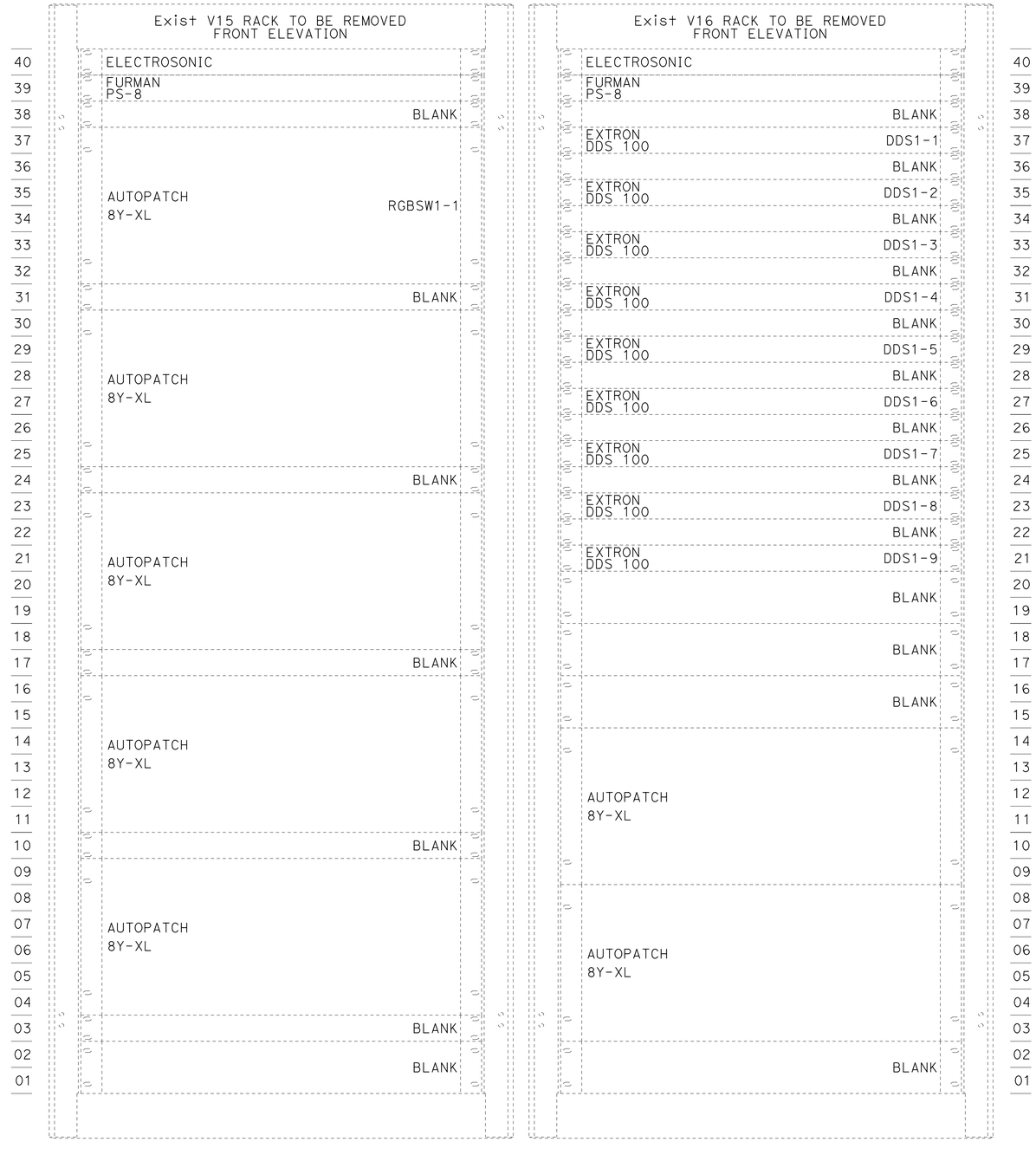

ROOM 125: COMPUTER ROOM

APPROVED FOR ELECTRICAL WORK ONLY

ELECTRICAL DETAILS
(EQUIPMENT RACK DETAIL)

NO SCALE

E-16

STATE OF CALIFORNIA - DEPARTMENT OF TRANSPORTATION
Caltrans®

CONSULTANT FUNCTIONAL SUPERVISOR: STEVE HUFF
CALCULATED-DESIGNED BY: JOSHUA MCNEILL
CHECKED BY: RANDY RATZLAFF
REVISED BY
DATE REVISED

LAST REVISION 04-01-15
DATE PLOTTED => 13-MAY-2015
TIME PLOTTED => 08:48

Dist	COUNTY	LOCATION	POST MILES TOTAL PROJECT	SHEET No.	TOTAL SHEETS
12	Ora	Var		18	91

REGISTERED CIVIL ENGINEER — DATE 2-25-15

REGISTERED PROFESSIONAL ENGINEER — CARLOS ORTIZ — No. 57535 — Exp. 12-31-15 — CIVIL — STATE OF CALIFORNIA

May 04, 2015
PLANS APPROVAL DATE

THE STATE OF CALIFORNIA OR ITS OFFICERS OR AGENTS SHALL NOT BE RESPONSIBLE FOR THE ACCURACY OR COMPLETENESS OF SCANNED COPIES OF THIS PLAN SHEET.

RBF CONSULTING
14725 ALTON PKWY
IRVINE, CA 92618

NOTES:

1. SEE SHEETS E-2, E-3 & E-4 FOR GENERAL NOTES, ABBREVIATIONS AND LEGEND.

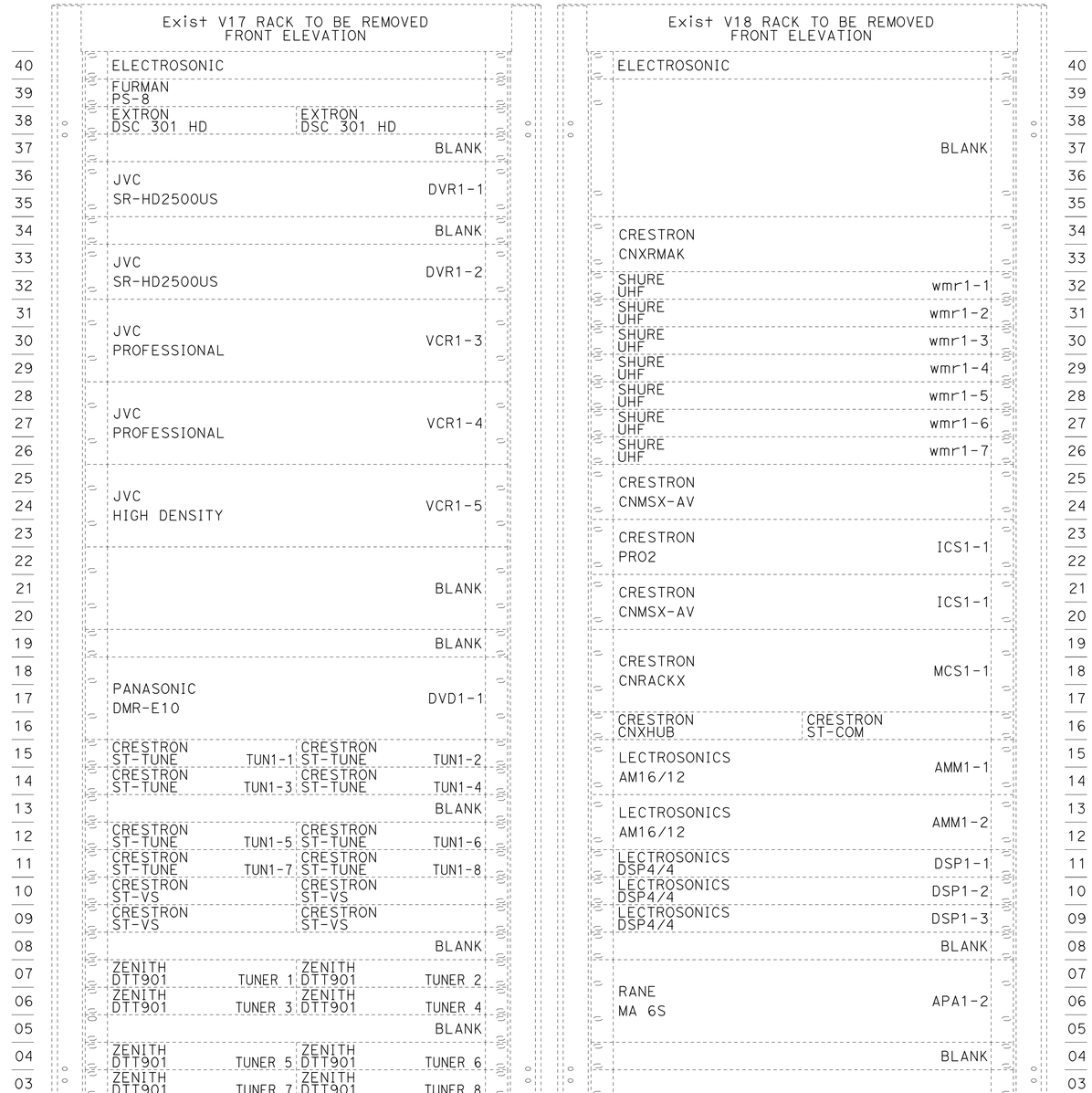

ROOM 125: COMPUTER ROOM

ELECTRICAL DETAILS
(EQUIPMENT RACK DETAIL)

NO SCALE

APPROVED FOR ELECTRICAL WORK ONLY

E-17

REVISED BY	DATE REVISED
JOSHUA MCNEILL	RANDY RATZLAFF

CALCULATED-DESIGNED BY / CHECKED BY

CONSULTANT FUNCTIONAL SUPERVISOR: STEVE HUFF

STATE OF CALIFORNIA - DEPARTMENT OF TRANSPORTATION — Caltrans

LAST REVISION 04-01-15 | DATE PLOTTED => 13-MAY-2015 | TIME PLOTTED => 08:48

Dist	COUNTY	LOCATION	POST MILES TOTAL PROJECT	SHEET No.	TOTAL SHEETS
12	Ora	Var		19	91

REGISTERED CIVIL ENGINEER 2-25-15 DATE

May 04, 2015
PLANS APPROVAL DATE

REGISTERED PROFESSIONAL ENGINEER CARLOS ORTIZ No. 57535 Exp. 12-31-15 CIVIL STATE OF CALIFORNIA

THE STATE OF CALIFORNIA OR ITS OFFICERS OR AGENTS SHALL NOT BE RESPONSIBLE FOR THE ACCURACY OR COMPLETENESS OF SCANNED COPIES OF THIS PLAN SHEET.

RBF CONSULTING
14725 ALTON PKWY
IRVINE, CA 92618

NOTES:

1. SEE SHEETS E-2, E-3 & E-4 FOR GENERAL NOTES, ABBREVIATIONS AND LEGEND.

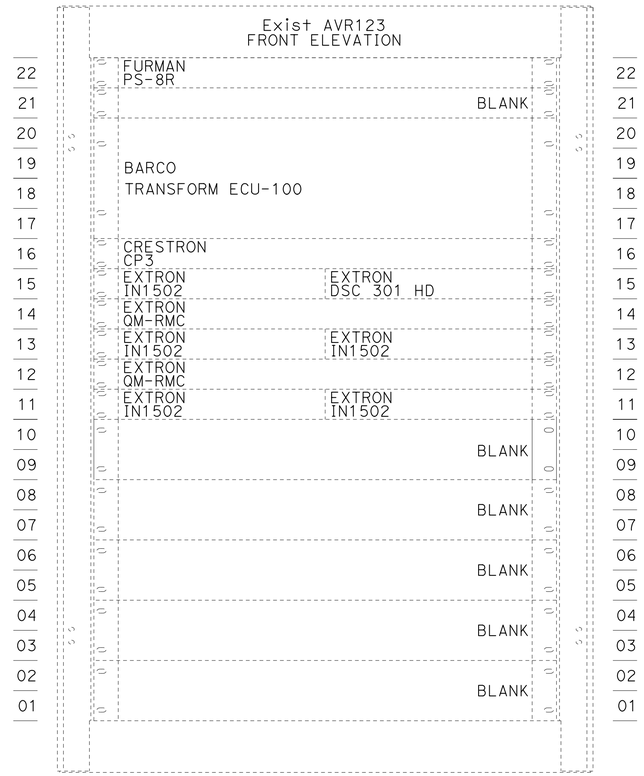

ROOM 123: PROJECTION ROOM

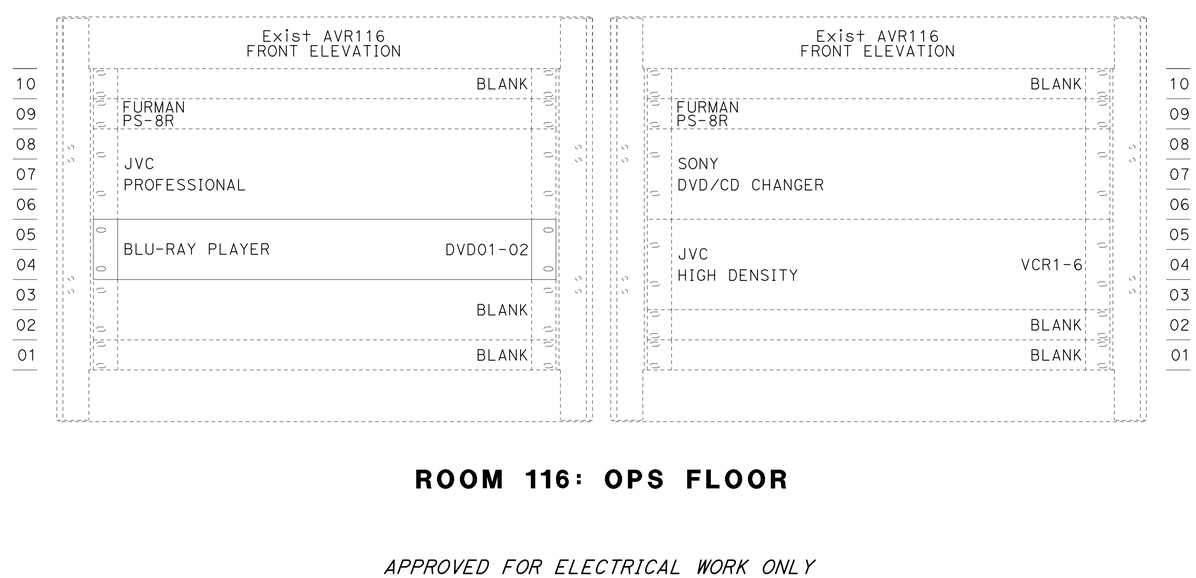

ROOM 116: OPS FLOOR

ELECTRICAL DETAILS
(CREDENZA RACK EQUIPMENT DETAIL)

NO SCALE

APPROVED FOR ELECTRICAL WORK ONLY

E-18

REVISED BY	DATE REVISED
JOSHUA MCNEILL	RANDY RATZLAFF

CALCULATED-DESIGNED BY | CHECKED BY

CONSULTANT FUNCTIONAL SUPERVISOR: STEVE HUFF

STATE OF CALIFORNIA - DEPARTMENT OF TRANSPORTATION

Caltrans

LAST REVISION 04-01-15 | DATE PLOTTED => 13-MAY-2015 | TIME PLOTTED => 08:48

Dist	COUNTY	LOCATION	POST MILES TOTAL PROJECT	SHEET No.	TOTAL SHEETS
12	Ora	Var		20	91

REGISTERED CIVIL ENGINEER — DATE 2-25-15

REGISTERED PROFESSIONAL ENGINEER CARLOS ORTIZ No. 57535 Exp. 12-31-15 CIVIL STATE OF CALIFORNIA

May 04, 2015
PLANS APPROVAL DATE

THE STATE OF CALIFORNIA OR ITS OFFICERS OR AGENTS SHALL NOT BE RESPONSIBLE FOR THE ACCURACY OR COMPLETENESS OF SCANNED COPIES OF THIS PLAN SHEET.

RBF CONSULTING
14725 ALTON PKWY
IRVINE, CA 92618

NOTES:

1. SEE SHEETS E-2, E-3 & E-4 FOR GENERAL NOTES, ABBREVIATIONS AND LEGEND.

AVR01-01 FRONT ELEVATION

	BLANK	
CISCO SG500-52MP	NET01-02	
	BLANK	
WIRELESS RECEIVER	WMS01-143	
	BLANK	
WIRELESS RECEIVER	WMS01-213	
	BLANK	
WIRELESS RECEIVER	WMS01-215	
	BLANK	
WIRELESS RECEIVER	WMS01-242	
	BLANK	
QSC I/O FRAME	DSP02-06	
	BLANK	
WIRELESS TRANSMITTER XMT01-143	WIRELESS TRANSMITTER XMT01-213	
	BLANK	
WIRELESS TRANSMITTER XMT01-215	WIRELESS TRANSMITTER XMT01-242	
CRESTRON DGE-2	PVM01-217	
CRESTRON DGE-2	PVM01-220	
CRESTRON DGE-2	PVM01-231	
CRESTRON DGE-2	PVM01-247	
	BLANK	
UNINTERRUPTIBLE POWER SUPPLY	UPS01-01	
UNINTERRUPTIBLE POWER SUPPLY	UPS01-02	

AVR01-02 FRONT ELEVATION

	BLANK	
QSC I/O FRAME	DSP02-01	
	BLANK	
QSC I/O FRAME	DSP02-02	
	BLANK	
CRESTRON DM-MD64X64	VSW01-01	
	BLANK	
HDTV TUNER TUN01-01	HDTV TUNER TUN01-02	
HDTV TUNER TUN01-03	HDTV TUNER TUN01-04	
HDTV TUNER TUN01-05	HDTV TUNER TUN01-06	
HDTV TUNER TUN01-07	HDTV TUNER TUN01-08	
HDTV TUNER TUN01-09	HDTV TUNER TUN01-10	
	BLANK	
CRESTRON CEN-C13-3	CTL02-01	
	BLANK	
JVC SR-HD2500US	Exist DVD01-01	
JVC SR-HD2500US	Exist DVD01-02	
JVC SR-HD2500US	Exist DVD01-03	
DVD/HDD RECORDER	DVD01-04	
DVD/HDD RECORDER	DVD01-05	
	BLANK	
UNINTERRUPTIBLE POWER SUPPLY	UPS01-03	
UNINTERRUPTIBLE POWER SUPPLY	UPS01-04	

ROOM 125: COMPUTER ROOM

ELECTRICAL DETAILS (EQUIPMENT RACK DETAIL)

NO SCALE

APPROVED FOR ELECTRICAL WORK ONLY

E-19

STATE OF CALIFORNIA - DEPARTMENT OF TRANSPORTATION
Caltrans®

CONSULTANT FUNCTIONAL SUPERVISOR: STEVE HUFF
CALCULATED-DESIGNED BY: JOSHUA MCNEILL
CHECKED BY: RANDY RATZLAFF
REVISED BY
DATE REVISED

LAST REVISION 04-01-15
DATE PLOTTED => 13-MAY-2015
TIME PLOTTED => 08:48

Dist	COUNTY	LOCATION	POST MILES TOTAL PROJECT	SHEET No.	TOTAL SHEETS
12	Ora	Var		21	91

REGISTERED CIVIL ENGINEER 2-25-15 DATE

May 04, 2015
PLANS APPROVAL DATE

REGISTERED PROFESSIONAL ENGINEER CARLOS ORTIZ No. 57535 Exp. 12-31-15 CIVIL STATE OF CALIFORNIA

THE STATE OF CALIFORNIA OR ITS OFFICERS OR AGENTS SHALL NOT BE RESPONSIBLE FOR THE ACCURACY OR COMPLETENESS OF SCANNED COPIES OF THIS PLAN SHEET.

RBF CONSULTING
14725 ALTON PKWY
IRVINE, CA 92618

NOTES:

1. SEE SHEETS E-2, E-3 & E-4 FOR GENERAL NOTES, ABBREVIATIONS AND LEGEND.

AVR01-03
FRONT ELEVATION

Rack Unit	Equipment	Model
44		
43	BLANK	
42	QSC I/O FRAME	DSP02-03
41	BLANK	
40	QSC I/O FRAME	DSP02-04
39	BLANK	
38	CRESTRON CEN-TRACK	TUN02-01
37		
36	BLANK	
35	CRESTRON CEN-TRACK	TUN02-02
34		
33	BLANK	
32		
31	CRESTRON DGE-2	PVM01-116-01
30		
29	CRESTRON DGE-2	PVM01-116-02
28		
27	CRESTRON DGE-2	PVM01-116-03
26		
25	CRESTRON DGE-2	PVM01-116-04
24		
23	CRESTRON DGE-2	PVM01-116-05
22		
21	CRESTRON DGE-2	PVM01-116-06
20		
19	CRESTRON DGE-2	PVM01-116-07
18		
17	CRESTRON DGE-2	PVM01-116-08
16		
15	BLANK	
14		
13	CRESTRON DGE-2	PVM01-108
12		
11	CRESTRON DGE-2	PVM01-112
10		
09	CRESTRON DGE-2	PVM01-117
08		
07	CRESTRON DGE-2	PVM01-118
06		
05	BLANK	
04	UNINTERRUPTIBLE POWER SUPPLY	UPS01-05
03		
02	UNINTERRUPTIBLE POWER SUPPLY	UPS01-06
01		

AVR01-04
FRONT ELEVATION

Rack Unit	Equipment	Model
44		
43	BLANK	
42	CISCO SG500-52MP	NET01-01
41	BLANK	
40	CRESTRON CP3	CTL01-01
39		
38	BLANK	
37		
36		
35	RACKMOUNT LCD	LCD01-01
34		
33		
32		
31		
30		
29	BLANK	
28		
27		
26		
25	KEYBOARD	KBD01-01
24	BLANK	
23		
22	Exist COMPUTER	Exist CPU01-01
21		
20		
19	BLANK	
18		
17	QSC CORE 3000	DSP01-01
16		
15	BLANK	
14		
13	QSC I/O FRAME	DSP02-05
12		
11	BLANK	
10		
09	QSC CX204V	AMP01-01
08		
07	QSC CX204V	AMP01-02
06		
05	QSC CX204V	AMP01-03
04		
03	BLANK	
02		
01	UNINTERRUPTIBLE POWER SUPPLY	UPS01-07

ROOM 125: COMPUTER ROOM

ELECTRICAL DETAILS
(EQUIPMENT RACK DETAIL)

NO SCALE

APPROVED FOR ELECTRICAL WORK ONLY

E-20

REVISED BY	DATE REVISED

CALCULATED-DESIGNED BY	CHECKED BY
JOSHUA MCNEILL	RANDY RATZLAFF

CONSULTANT FUNCTIONAL SUPERVISOR: STEVE HUFF

STATE OF CALIFORNIA - DEPARTMENT OF TRANSPORTATION
Caltrans

LAST REVISION 04-01-15 | DATE PLOTTED => 13-MAY-2015 | TIME PLOTTED => 08:48

Dist	COUNTY	LOCATION	POST MILES TOTAL PROJECT	SHEET No.	TOTAL SHEETS
12	Ora	Var		22	91

REGISTERED CIVIL ENGINEER 2-25-15 DATE

May 04, 2015
PLANS APPROVAL DATE

REGISTERED PROFESSIONAL ENGINEER CARLOS ORTIZ No. 57535 Exp. 12-31-15 CIVIL STATE OF CALIFORNIA

THE STATE OF CALIFORNIA OR ITS OFFICERS OR AGENTS SHALL NOT BE RESPONSIBLE FOR THE ACCURACY OR COMPLETENESS OF SCANNED COPIES OF THIS PLAN SHEET.

RBF CONSULTING
14725 ALTON PKWY
IRVINE, CA 92618

NOTES:

1. SEE SHEETS E-2, E-3 & E-4 FOR GENERAL NOTES, ABBREVIATIONS AND LEGEND.

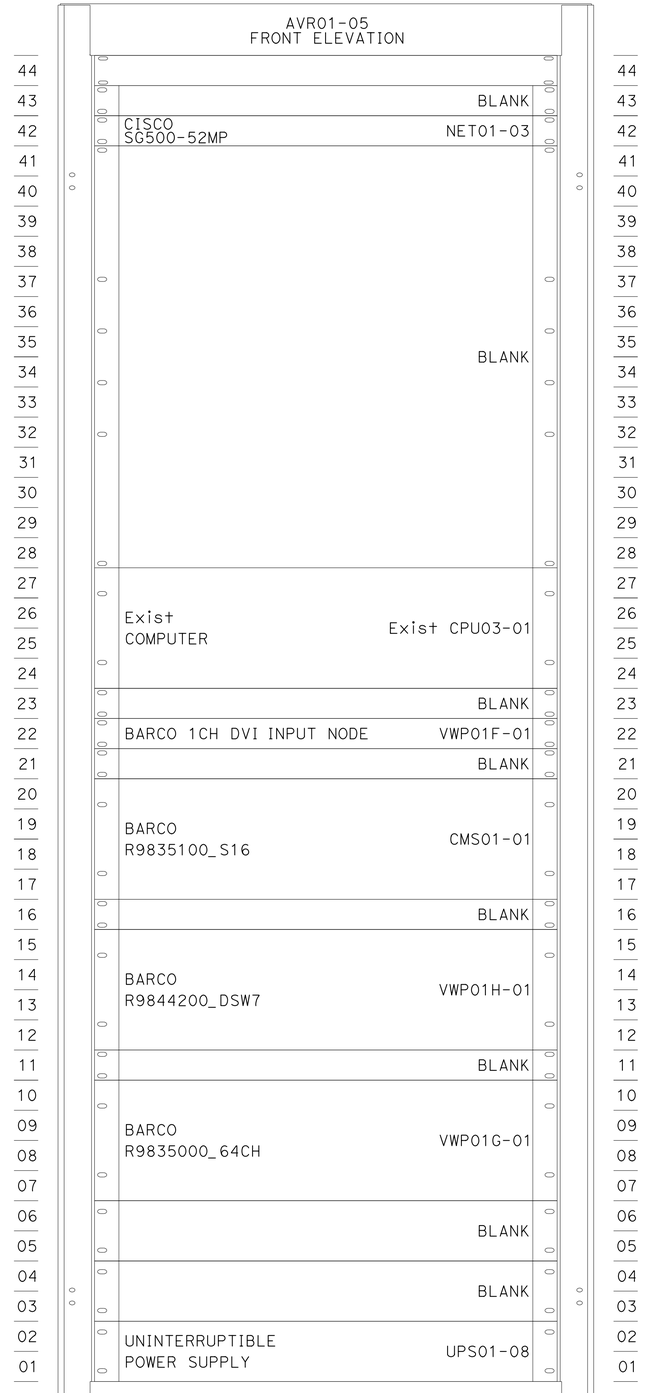

ROOM 123: REAR PROJECTION ROOM

ELECTRICAL DETAILS
(EQUIPMENT RACK DETAIL)

NO SCALE

APPROVED FOR ELECTRICAL WORK ONLY

E-21

STATE OF CALIFORNIA - DEPARTMENT OF TRANSPORTATION
Caltrans®

CONSULTANT FUNCTIONAL SUPERVISOR: STEVE HUFF
CALCULATED-DESIGNED BY: JOSHUA MCNEILL
CHECKED BY: RANDY RATZLAFF
REVISED BY
DATE REVISED

LAST REVISION 04-01-15
DATE PLOTTED => 13-MAY-2015
TIME PLOTTED => 08:48

Dist	COUNTY	LOCATION	POST MILES TOTAL PROJECT	SHEET No.	TOTAL SHEETS
12	Ora	Var		23	91

REGISTERED CIVIL ENGINEER — DATE 2-25-15

May 04, 2015
PLANS APPROVAL DATE

REGISTERED PROFESSIONAL ENGINEER — CARLOS ORTIZ — No. 57535 — Exp. 12-31-15 — CIVIL — STATE OF CALIFORNIA

THE STATE OF CALIFORNIA OR ITS OFFICERS OR AGENTS SHALL NOT BE RESPONSIBLE FOR THE ACCURACY OR COMPLETENESS OF SCANNED COPIES OF THIS PLAN SHEET.

RBF CONSULTING
14725 ALTON PKWY
IRVINE, CA 92618

NOTES:

1. SEE SHEETS E-2, E-3 & E-4 FOR GENERAL NOTES, ABBREVIATIONS AND LEGEND.

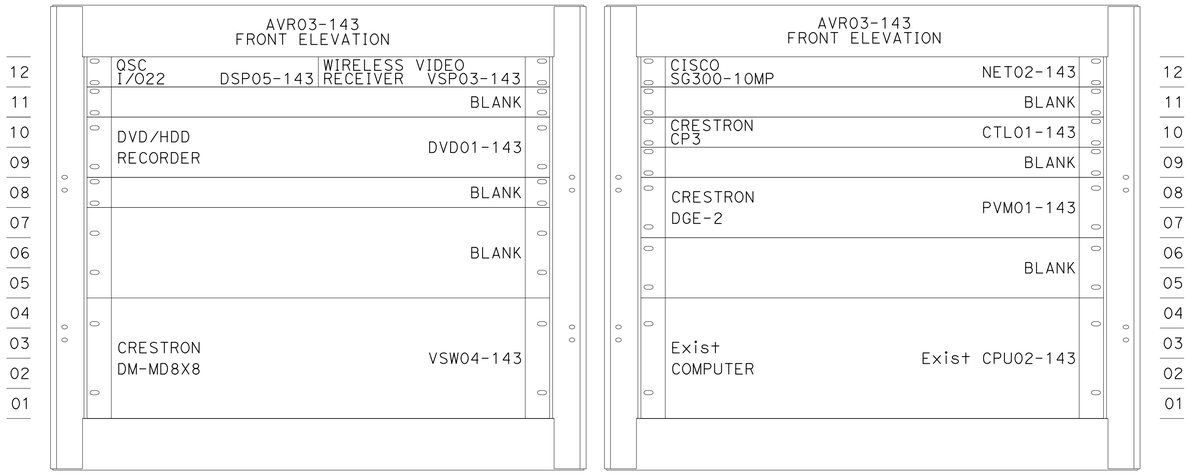

ROOM 143

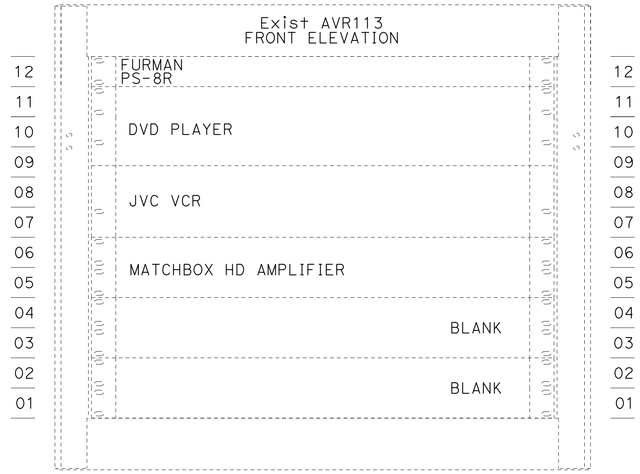

ROOM 113: 911 CALL CENTER

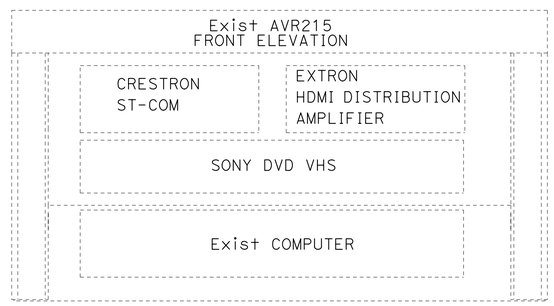

ROOM 123: 911 CALL CENTER

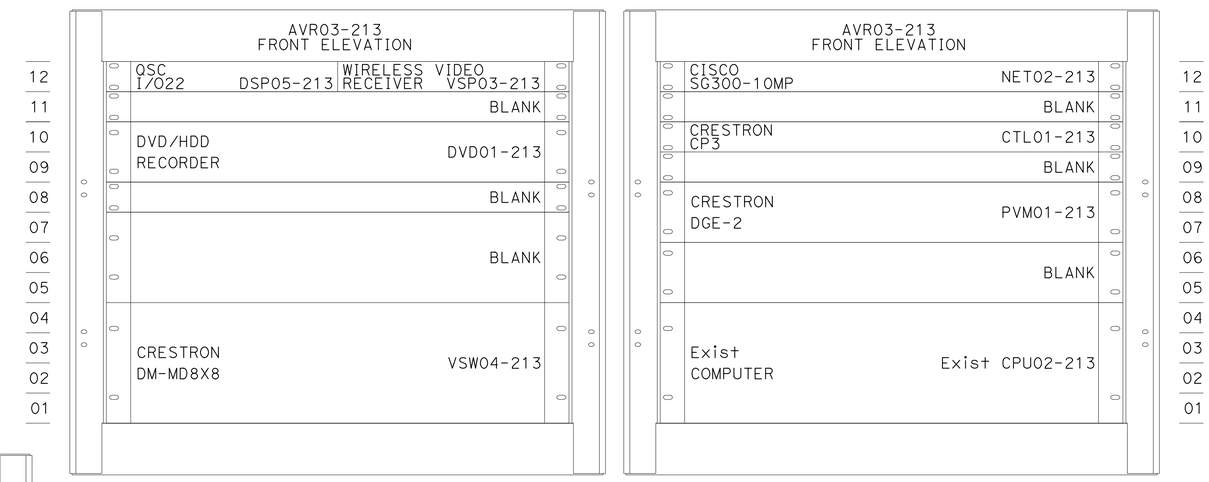

ROOM 213

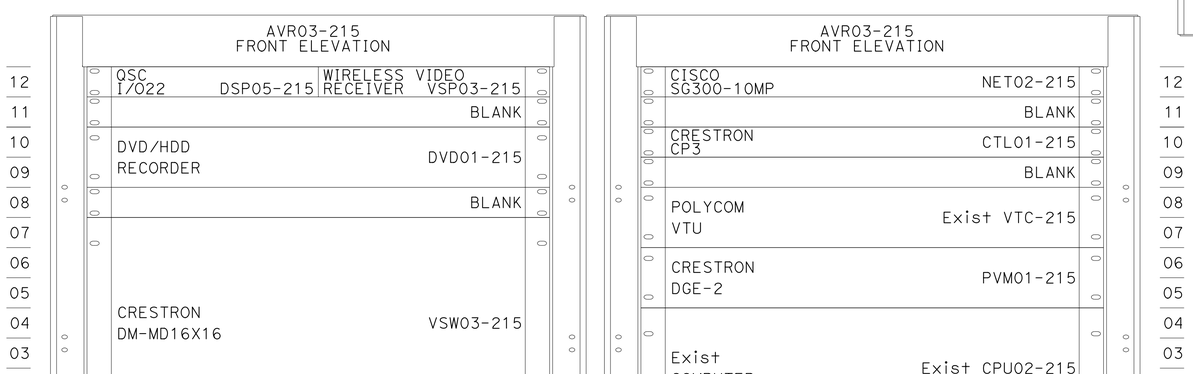

ROOM 215

APPROVED FOR ELECTRICAL WORK ONLY

ELECTRICAL DETAILS
(CREDENZA RACK EQUIPMENT DETAIL)

NO SCALE

E-22

STATE OF CALIFORNIA - DEPARTMENT OF TRANSPORTATION
Caltrans

CONSULTANT FUNCTIONAL SUPERVISOR: STEVE HUFF
CALCULATED-DESIGNED BY: JOSHUA MCNEILL
CHECKED BY: RANDY RATZLAFF
REVISED BY
DATE REVISED

LAST REVISION 04-01-15
DATE PLOTTED => 13-MAY-2015
TIME PLOTTED => 08:49

Dist	COUNTY	LOCATION	POST MILES TOTAL PROJECT	SHEET No.	TOTAL SHEETS
12	Ora	Var		24	91

REGISTERED CIVIL ENGINEER 2-25-15 DATE

May 04, 2015
PLANS APPROVAL DATE

REGISTERED PROFESSIONAL ENGINEER CARLOS ORTIZ No. 57535 Exp. 12-31-15 CIVIL STATE OF CALIFORNIA

THE STATE OF CALIFORNIA OR ITS OFFICERS OR AGENTS SHALL NOT BE RESPONSIBLE FOR THE ACCURACY OR COMPLETENESS OF SCANNED COPIES OF THIS PLAN SHEET.

RBF CONSULTING
14725 ALTON PKWY
IRVINE, CA 92618

NOTES:

1. SEE SHEETS E-2, E-3 & E-4 FOR GENERAL NOTES, ABBREVIATIONS AND LEGEND.
2. FOR AVR03-242, SLIDE OUT ROTATING RAILS ONLY (INSTALL IN EXISTING FURNITURE).

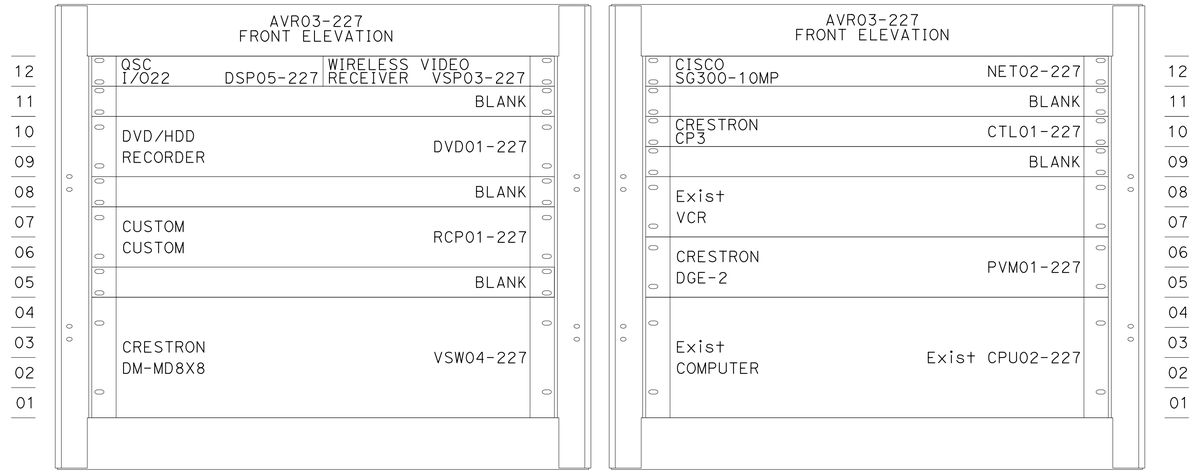

ROOM 227

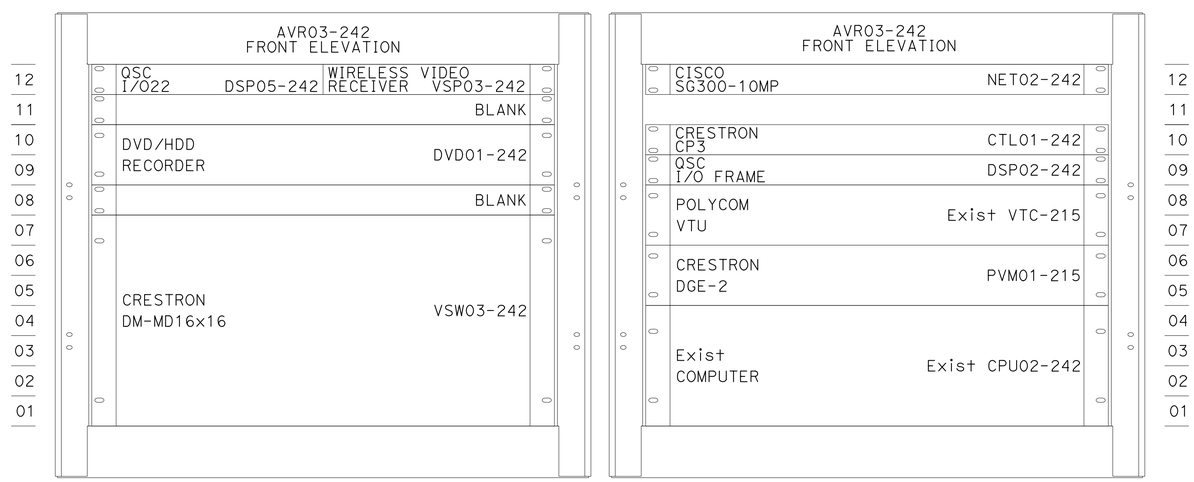

ROOM 242

ELECTRICAL DETAILS
(CREDENZA RACK EQUIPMENT DETAIL)

NO SCALE

APPROVED FOR ELECTRICAL WORK ONLY

E-23

STATE OF CALIFORNIA - DEPARTMENT OF TRANSPORTATION
Caltrans

CONSULTANT FUNCTIONAL SUPERVISOR: STEVE HUFF
CALCULATED-DESIGNED BY: JOSHUA MCNEILL
CHECKED BY: RANDY RATZLAFF
REVISED BY
DATE REVISED

LAST REVISION 04-01-15
DATE PLOTTED => 13-MAY-2015
TIME PLOTTED => 08:49

Dist	COUNTY	LOCATION	POST MILES TOTAL PROJECT	SHEET No.	TOTAL SHEETS
12	Ora	Var		25	91

REGISTERED CIVIL ENGINEER 2-25-15 DATE

May 04, 2015
PLANS APPROVAL DATE

REGISTERED PROFESSIONAL ENGINEER CARLOS ORTIZ No. 57535 Exp. 12-31-15 CIVIL STATE OF CALIFORNIA

THE STATE OF CALIFORNIA OR ITS OFFICERS OR AGENTS SHALL NOT BE RESPONSIBLE FOR THE ACCURACY OR COMPLETENESS OF SCANNED COPIES OF THIS PLAN SHEET.

RBF CONSULTING
14725 ALTON PKWY
IRVINE, CA 92618

NOTES:

1. SEE SHEETS E-2, E-3 & E-4 FOR GENERAL NOTES, ABBREVIATIONS AND LEGEND.

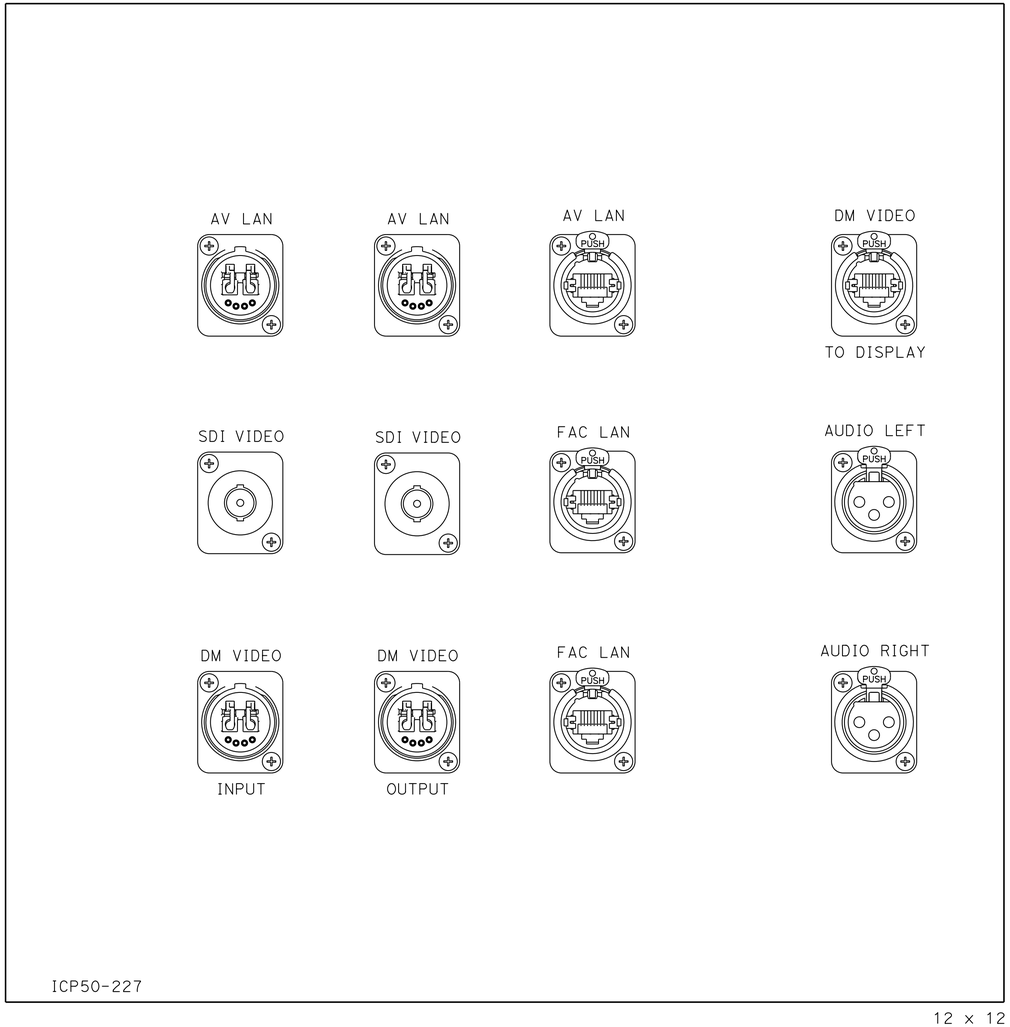

ROOM 227: ICP50-227

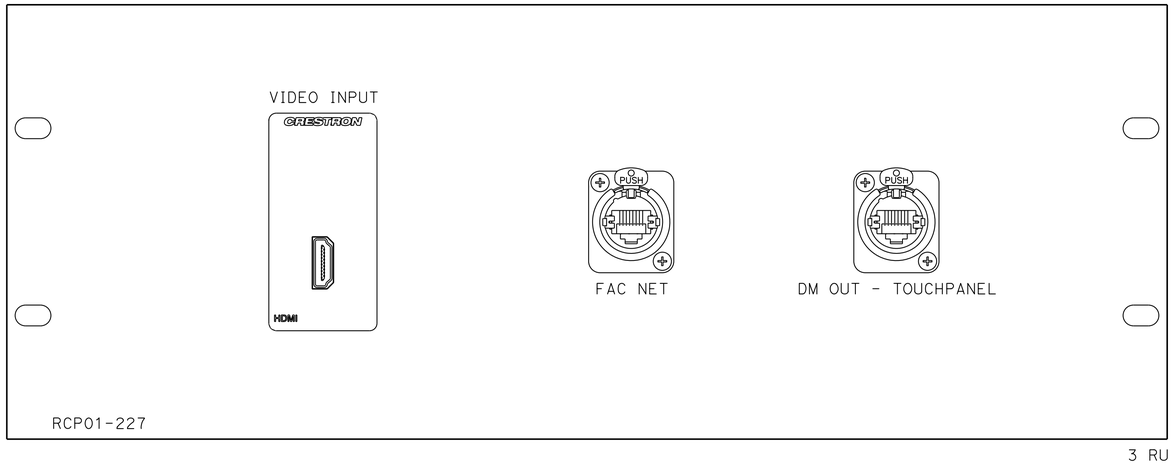

ROOM 227: RCP01-227

APPROVED FOR ELECTRICAL WORK ONLY

ELECTRICAL DETAILS
(PANEL DETAILS)

NO SCALE

E-24

STATE OF CALIFORNIA - DEPARTMENT OF TRANSPORTATION
Caltrans

CONSULTANT FUNCTIONAL SUPERVISOR: STEVE HUFF
CALCULATED-DESIGNED BY: JOSHUA MCNEILL
CHECKED BY: RANDY RATZLAFF
REVISED BY
DATE REVISED

LAST REVISION 04-01-15
DATE PLOTTED => 13-MAY-2015
TIME PLOTTED => 08:49

Dist	COUNTY	LOCATION	POST MILES TOTAL PROJECT	SHEET No.	TOTAL SHEETS
12	Ora	Var		26	91

REGISTERED CIVIL ENGINEER 2-25-15 DATE

May 04, 2015
PLANS APPROVAL DATE

REGISTERED PROFESSIONAL ENGINEER CARLOS ORTIZ No. 57535 Exp. 12-31-15 CIVIL STATE OF CALIFORNIA

THE STATE OF CALIFORNIA OR ITS OFFICERS OR AGENTS SHALL NOT BE RESPONSIBLE FOR THE ACCURACY OR COMPLETENESS OF SCANNED COPIES OF THIS PLAN SHEET.

RBF CONSULTING
14725 ALTON PKWY
IRVINE, CA 92618

NOTES:

1. SEE SHEETS E-2, E-3 & E-4 FOR GENERAL NOTES, ABBREVIATIONS AND LEGEND.

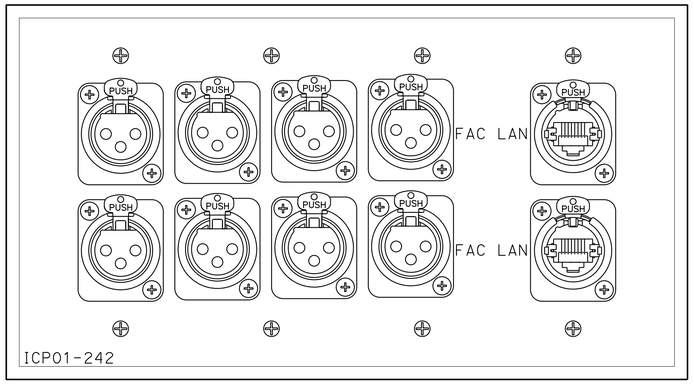

4 GANG

ROOM 242 FLOOR BOX - ICP01-242

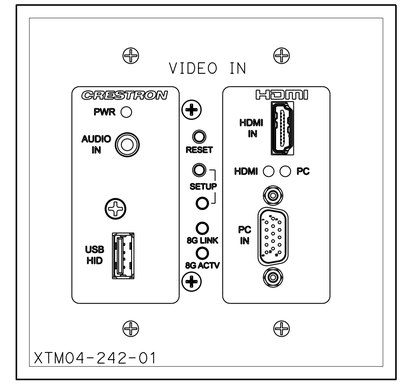

2 GANG

ROOM 242 FLOOR BOX: XTM04-242-01

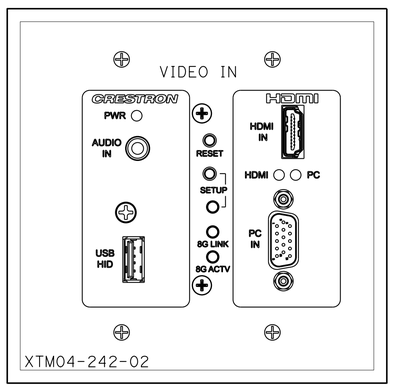

2 GANG

ROOM 242: XTM04-242-02

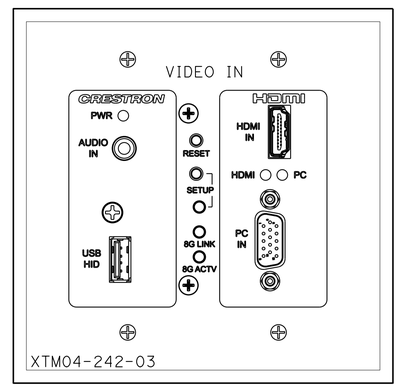

2 GANG

ROOM 242: XTM04-242-03

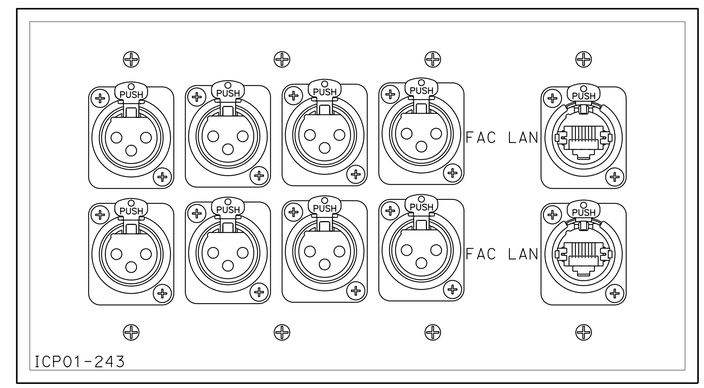

4 GANG

ROOM 243 FLOOR BOXES AND ICPS

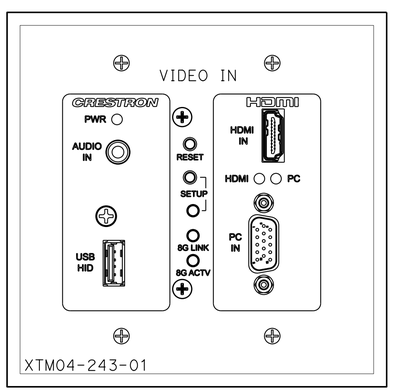

2 GANG

ROOM 243 FLOOR BOX: XTM04-243-01

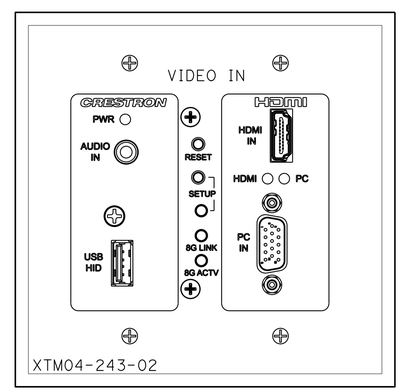

2 GANG

ROOM 243: XTM04-243-02

ELECTRICAL DETAILS
(PANEL DETAILS)

NO SCALE

APPROVED FOR ELECTRICAL WORK ONLY

E-25

STATE OF CALIFORNIA - DEPARTMENT OF TRANSPORTATION
Caltrans®

CONSULTANT FUNCTIONAL SUPERVISOR: STEVE HUFF
CALCULATED-DESIGNED BY: JOSHUA MCNEILL
CHECKED BY: RANDY RATZLAFF
REVISED BY
DATE REVISED

LAST REVISION 04-01-15
DATE PLOTTED => 13-MAY-2015
TIME PLOTTED => 08:49

Dist	COUNTY	LOCATION	POST MILES TOTAL PROJECT	SHEET No.	TOTAL SHEETS
12	Ora	Var		27	91

REGISTERED CIVIL ENGINEER 2-25-15 DATE

May 04, 2015
PLANS APPROVAL DATE

REGISTERED PROFESSIONAL ENGINEER CARLOS ORTIZ No. 57535 Exp. 12-31-15 CIVIL STATE OF CALIFORNIA

THE STATE OF CALIFORNIA OR ITS OFFICERS OR AGENTS SHALL NOT BE RESPONSIBLE FOR THE ACCURACY OR COMPLETENESS OF SCANNED COPIES OF THIS PLAN SHEET.

RBF CONSULTING
14725 ALTON PKWY
IRVINE, CA 92618

NOTES:

1. SEE SHEETS E-2, E-3 & E-4 FOR GENERAL NOTES, ABBREVIATIONS AND LEGEND.

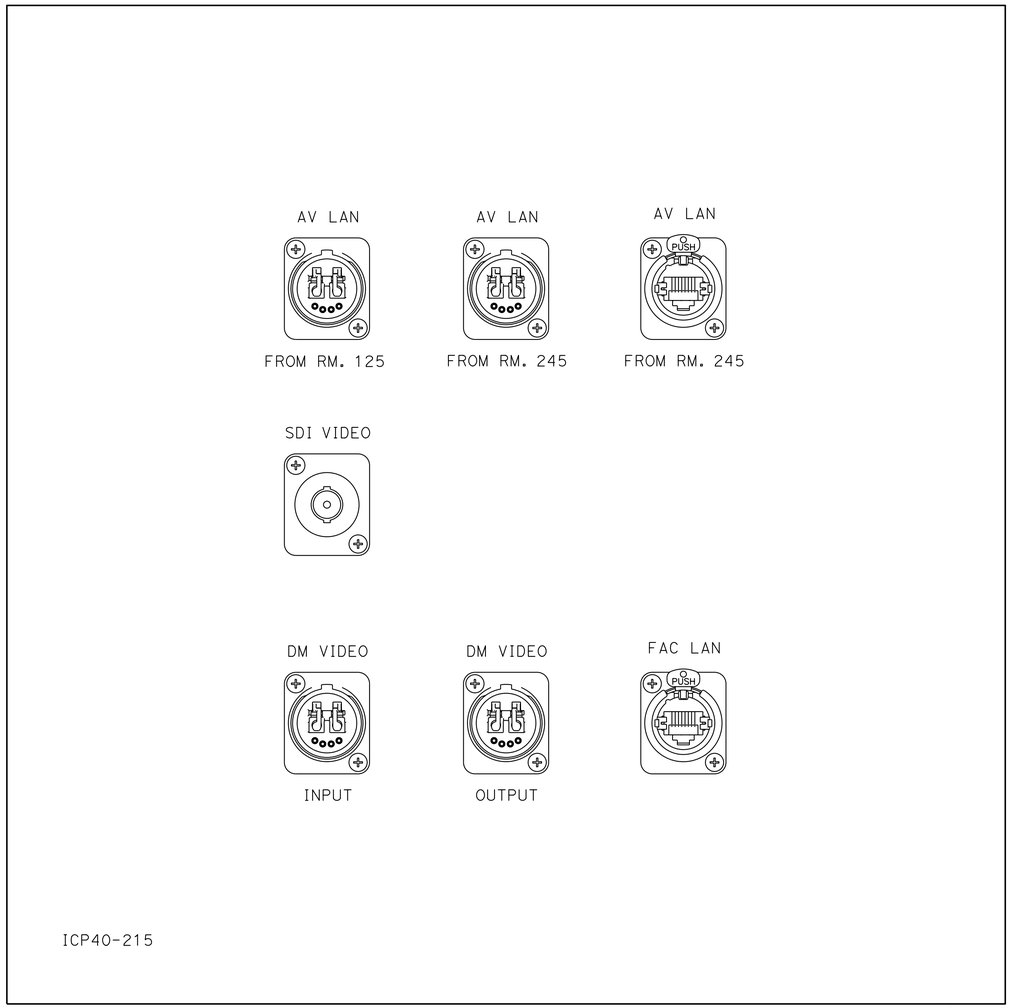

12 x 12

ROOM 215: ICP40-215

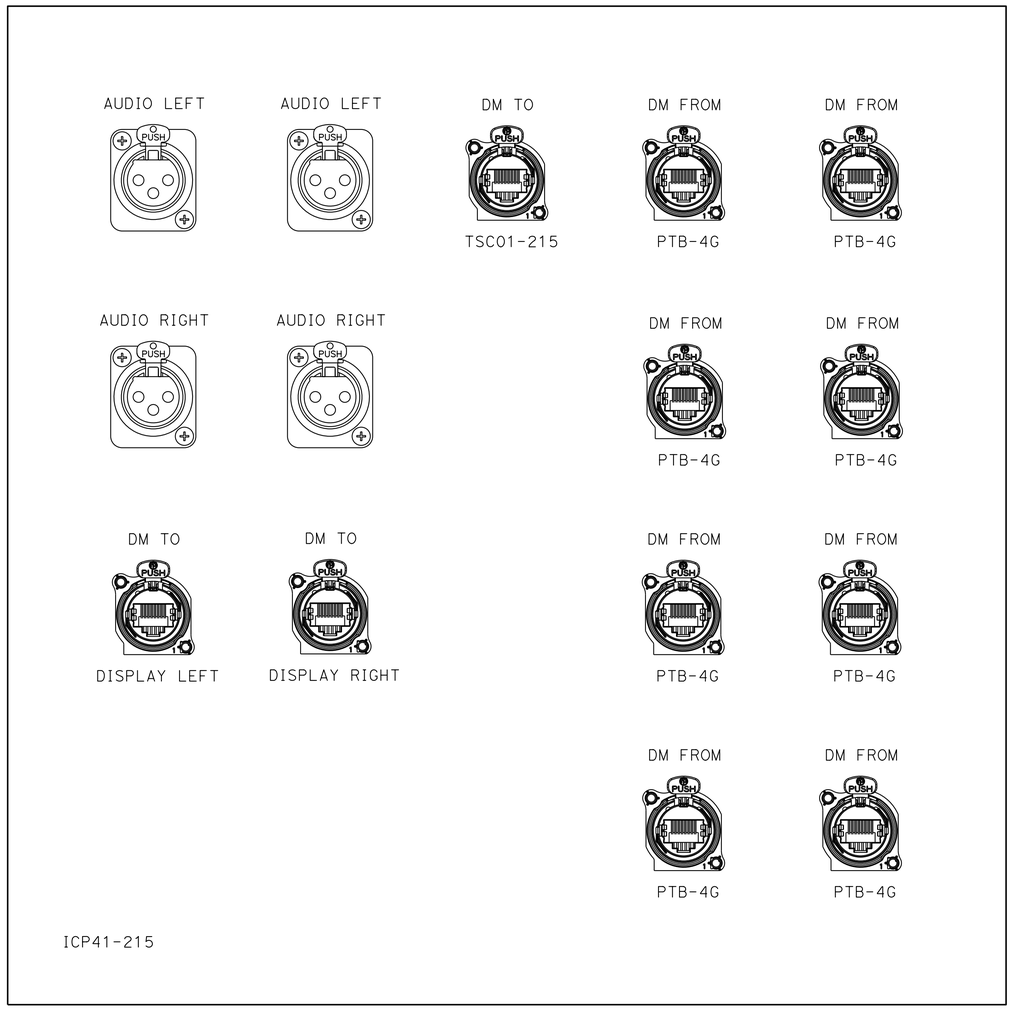

12 x 12

ROOM 215: ICP41-215

ELECTRICAL DETAILS
(PANEL DETAILS)

NO SCALE

APPROVED FOR ELECTRICAL WORK ONLY

E-26

STATE OF CALIFORNIA - DEPARTMENT OF TRANSPORTATION
Caltrans

CONSULTANT FUNCTIONAL SUPERVISOR: STEVE HUFF
CALCULATED-DESIGNED BY: JOSHUA MCNEILL
CHECKED BY: RANDY RATZLAFF
REVISED BY
DATE REVISED

LAST REVISION 04-01-15
DATE PLOTTED => 13-MAY-2015
TIME PLOTTED => 08:49

Dist	COUNTY	LOCATION	POST MILES TOTAL PROJECT	SHEET No.	TOTAL SHEETS
12	Ora	Var		28	91

REGISTERED CIVIL ENGINEER — DATE 2-25-15

May 04, 2015
PLANS APPROVAL DATE

REGISTERED PROFESSIONAL ENGINEER — CARLOS ORTIZ — No. 57535 — Exp. 12-31-15 — CIVIL — STATE OF CALIFORNIA

THE STATE OF CALIFORNIA OR ITS OFFICERS OR AGENTS SHALL NOT BE RESPONSIBLE FOR THE ACCURACY OR COMPLETENESS OF SCANNED COPIES OF THIS PLAN SHEET.

RBF CONSULTING
14725 ALTON PKWY
IRVINE, CA 92618

NOTES:

1. SEE SHEETS E-2, E-3 & E-4 FOR GENERAL NOTES, ABBREVIATIONS AND LEGEND.

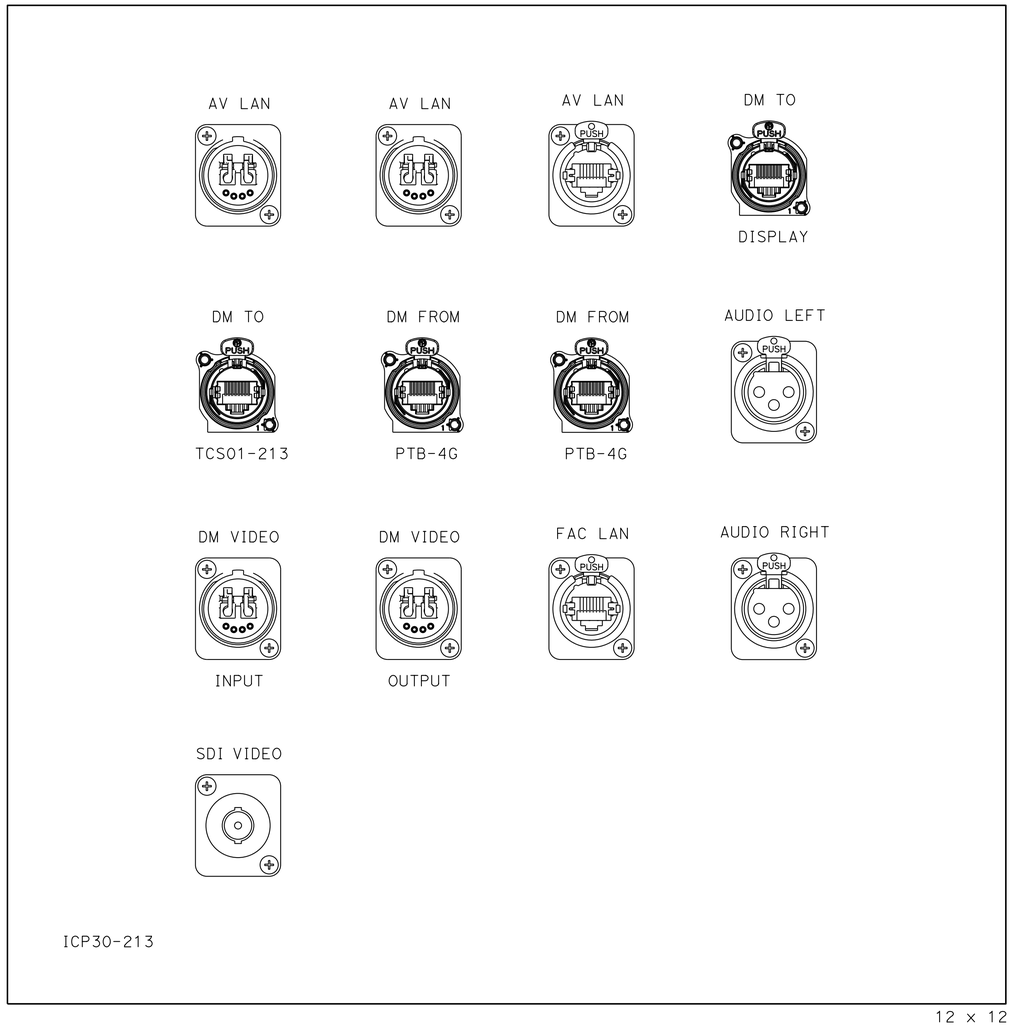

ROOM 213: ICP30-213

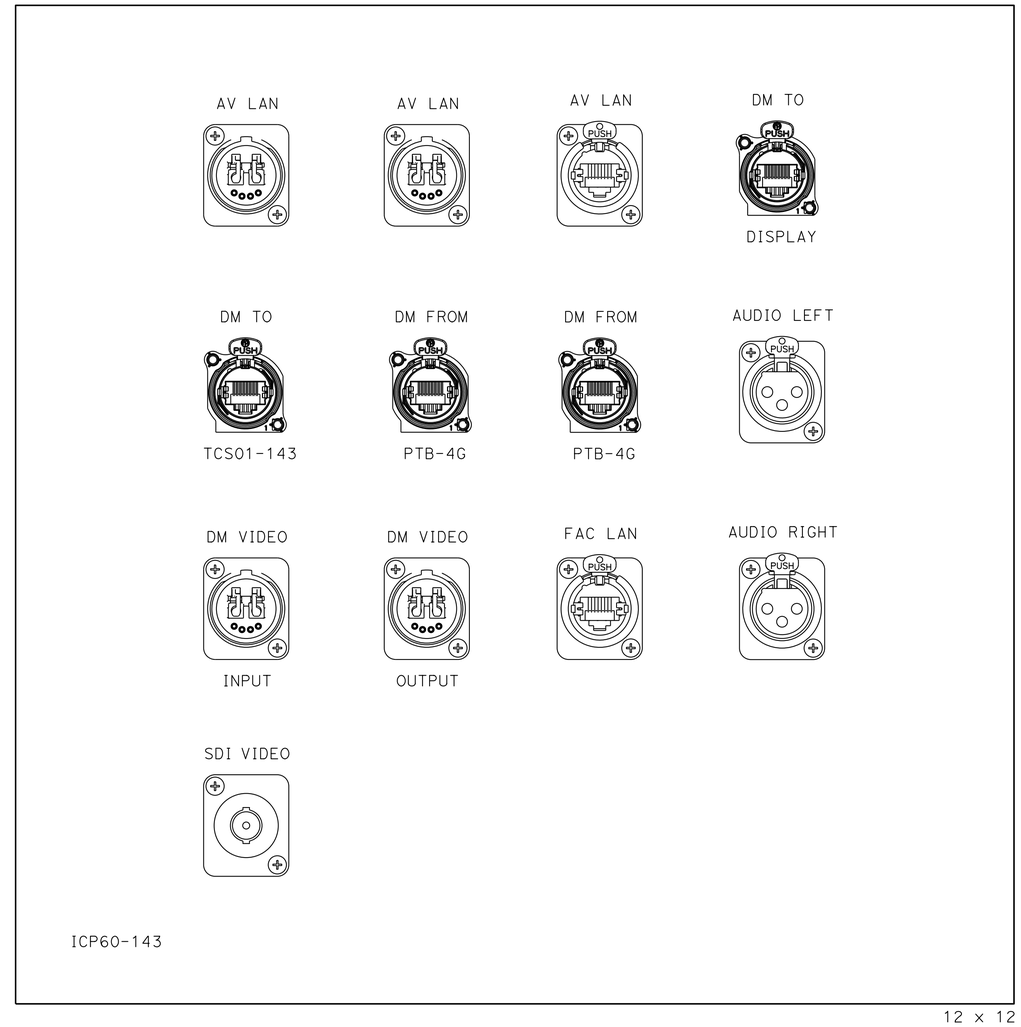

ROOM 143: ICP60-143

ELECTRICAL DETAILS
(PANEL DETAILS)

NO SCALE

APPROVED FOR ELECTRICAL WORK ONLY

E-27

STATE OF CALIFORNIA - DEPARTMENT OF TRANSPORTATION — Caltrans

CONSULTANT FUNCTIONAL SUPERVISOR: STEVE HUFF
CALCULATED-DESIGNED BY: JOSHUA MCNEILL
CHECKED BY: RANDY RATZLAFF
REVISED BY
DATE REVISED

LAST REVISION 04-01-15
DATE PLOTTED => 13-MAY-2015
TIME PLOTTED => 08:49

Dist	COUNTY	LOCATION	POST MILES TOTAL PROJECT	SHEET No.	TOTAL SHEETS
12	Ora	Var		29	91

REGISTERED CIVIL ENGINEER — DATE 2-25-15

May 04, 2015
PLANS APPROVAL DATE

REGISTERED PROFESSIONAL ENGINEER — CARLOS ORTIZ — No. 57535 — Exp. 12-31-15 — CIVIL — STATE OF CALIFORNIA

THE STATE OF CALIFORNIA OR ITS OFFICERS OR AGENTS SHALL NOT BE RESPONSIBLE FOR THE ACCURACY OR COMPLETENESS OF SCANNED COPIES OF THIS PLAN SHEET.

RBF CONSULTING
14725 ALTON PKWY
IRVINE, CA 92618

NOTES:

1. SEE SHEETS E-2, E-3 & E-4 FOR GENERAL NOTES, ABBREVIATIONS AND LEGEND.

AV BOX AND FILL SCHEDULE

SHEET	JBOX	ITEM	MANUFACTURER	MODEL	DEVICE DESCRIPTION	DEVICE MOUNTING	DEVICE ELEVATION	WIRE #	QTY/ TYPE	CABLE NAME	SIGNAL TYPE	BACK BOX SIZE	PANEL	JBOX MOUNTING	JBOX ELEVATION	CABLE SOURCE	NOTES
Loc - LOCAL DISPLAYS																	
Rm 101 - LOBBY																	
E-8	JBX101-01	RCV02-101	CRESTRON	DM-RMC-SCALER-S	DIGITALMEDIA 8G FIBER RECEIVER & ROOM CONTROLLER W/SCALER	WALL SURFACE	AT DISPLAY	N0218	1/Z	CRESTRON CRESFIBER8G-P	VIDEO	4S	COVER W/GROMMET	WALL FLUSH	+60" AFF	Rm 125	PROVIDE AC POWER RECEPTACLE ADJACENT TO LOW VOLTAGE JBOX
E-8	JBX101-02	NET05-101	CISCO	AIR-CAP1602I-X-K9	AIRONET 1600WIRELESS-N ACCESS POINT	WALL SURFACE	+12'-0" AFF	N0175	1/N	-	NETWORK	4S	COVER W/GROMMET	WALL FLUSH	+12'-0" AFF	Rm 125	PROVIDE AC POWER RECEPTACLE ADJACENT TO LOW VOLTAGE JBOX
Rm 201 - DIVISION CHIEF TRAFFIC OPERATIONS CONFERENCE ROOM																	
E-11	JBX201-01	RCV02-201	CRESTRON	DM-RMC-SCALER-S	DIGITALMEDIA 8G FIBER RECEIVER & ROOM CONTROLLER W/SCALER	WALL SURFACE	AT DISPLAY	N0222	1/Z	CRESTRON CRESFIBER8G-P	VIDEO	4S	COVER W/GROMMET	WALL FLUSH	+60" AFF	Rm 125	PROVIDE ADJACENT AC POWER RECEPTACLE
Rm 231 - SYSTEM SUPPORT AREA																	
E-9	JBX231-01	NET05-231	CISCO	AIR-CAP1602I-X-K9	AIRONET 1600WIRELESS-N ACCESS POINT	WALL SURFACE	+12'-0" AFF	N0177	1/N	-	NETWORK	4S	COVER W/GROMMET	WALL FLUSH	+12'-0" AFF	Rm 125	PROVIDE AC POWER RECEPTACLE ADJACENT TO LOW VOLTAGE JBOX
E-9	JBX231-02	RCV02-231	CRESTRON	DM-RMC-SCALER-S	DIGITALMEDIA 8G FIBER RECEIVER & ROOM CONTROLLER W/SCALER	WALL SURFACE	AT DISPLAY	N0221	1/Z	CRESTRON CRESFIBER8G-P	VIDEO	4S	COVER W/GROMMET	CEILING FLUSH	CEILING	Rm 125	PROVIDE AC POWER RECEPTACLE ADJACENT TO LOW VOLTAGE JBOX
E-9	TSC02A-231	TSC02-231	CRESTRON	V15-WALL-B	V-PANEL 15" HD WALL MOUNTED TOUCH SCREEN (BLACK)	WALL FLUSH	+48" AFF	V0251	1/NS	CRESTRON DM-CBL-P	CONTROL	CUSTOM	TSC02-231	WALL FLUSH	+48" AFF	Rm 125	CRESTRON BACKBOX FOR FLUSH MOUNT TOUCHSCREEN
LTS - LOCAL TOUCH SCREENS																	
Rm 108 - CHP COMMANDER																	
E-8	JBX108-01	ICP09-108	CRESTRON	MP-WP181-C	MEDIA PRESENTATION WALL PLATE - DIGITALMEDIA 8G+	WALL FLUSH	+18" AFF	V0245	1/NS	CRESTRON DM-CBL-P	CONTROL	1G	ICP09-108	WALL FLUSH	+18" AFF	Rm 125	PROVIDE ADJACENT AC POWER RECEPTACLE
Rm 117 - OPERATIONS SHIFT LEADER																	
E-7	JBX117-01	ICP09-117	CRESTRON	MP-WP181-C	MEDIA PRESENTATION WALL PLATE - DIGITALMEDIA 8G+	WALL FLUSH	+18" AFF	V0247	1/NS	CRESTRON DM-CBL-P	CONTROL	4S	ICP09-117	WALL FLUSH	+12'-0" AFF	Rm 125	PROVIDE AC POWER RECEPTACLE ADJACENT TO LOW VOLTAGE JBOX
Rm 118 - TMC OPERATIONS BRANCH CHIEF																	
E-7	JBX118-01	ICP09-118	CRESTRON	MP-WP181-C	MEDIA PRESENTATION WALL PLATE - DIGITALMEDIA 8G+	WALL FLUSH	+18" AFF	V0248	1/NS	CRESTRON DM-CBL-P	CONTROL	4S	ICP09-118	WALL FLUSH	+12'-0" AFF	Rm 125	PROVIDE AC POWER RECEPTACLE ADJACENT TO LOW VOLTAGE JBOX
Rm 217 - TRAFFIC SYSTEMS DEVELOPMENT BRANCH CHIEF																	
E-11	JBX217-01	ICP09-217	CRESTRON	MP-WP181-C	MEDIA PRESENTATION WALL PLATE - DIGITALMEDIA 8G+	WALL FLUSH	+18" AFF	V0249	1/NS	CRESTRON DM-CBL-P	CONTROL	1G	ICP09-217	WALL FLUSH	+18" AFF	Rm 125	PROVIDE ADJACENT AC POWER RECEPTACLE
Rm 220 - ELECTRICAL SYSTEMS BRANCH CHIEF																	
E-11	JBX220-01	ICP09-220	CRESTRON	MP-WP181-C	MEDIA PRESENTATION WALL PLATE - DIGITALMEDIA 8G+	WALL FLUSH	+18" AFF	V0250	1/NS	CRESTRON DM-CBL-P	CONTROL	1G	ICP09-220	WALL FLUSH	+18" AFF	Rm 125	PROVIDE ADJACENT AC POWER RECEPTACLE
Rm 247 - DIVISION CHIEF TRAFFIC OPERATIONS																	
E-11	JBX247-01	ICP09-247	CRESTRON	MP-WP181-C	MEDIA PRESENTATION WALL PLATE - DIGITALMEDIA 8G+	WALL FLUSH	+18" AFF	V0252	1/NS	CRESTRON DM-CBL-P	CONTROL	1G	ICP09-247	WALL FLUSH	+18" AFF	Rm 125	PROVIDE ADJACENT AC POWER RECEPTACLE

ELECTRICAL DETAILS
(FILL SCHEDULE)

APPROVED FOR ELECTRICAL WORK ONLY

E-28

REVISED BY | DATE REVISED
JOSHUA MCNEILL | RANDY RATZLAFF
CALCULATED-DESIGNED BY | CHECKED BY
CONSULTANT FUNCTIONAL SUPERVISOR | STEVE HUFF
STATE OF CALIFORNIA - DEPARTMENT OF TRANSPORTATION | Caltrans

LAST REVISION 04-01-15 | DATE PLOTTED => 13-MAY-2015 | TIME PLOTTED => 08:49

Dist	COUNTY	LOCATION	POST MILES TOTAL PROJECT	SHEET No.	TOTAL SHEETS
12	Ora	Var		30	91

REGISTERED CIVIL ENGINEER 2-25-15 DATE

May 04, 2015
PLANS APPROVAL DATE

REGISTERED PROFESSIONAL ENGINEER CARLOS ORTIZ No. 57535 Exp. 12-31-15 CIVIL STATE OF CALIFORNIA

THE STATE OF CALIFORNIA OR ITS OFFICERS OR AGENTS SHALL NOT BE RESPONSIBLE FOR THE ACCURACY OR COMPLETENESS OF SCANNED COPIES OF THIS PLAN SHEET.

RBF CONSULTING
14725 ALTON PKWY
IRVINE, CA 92618

NOTES:

1. SEE SHEETS E-2, E-3 & E-4 FOR GENERAL NOTES, ABBREVIATIONS AND LEGEND.

AV BOX AND FILL SCHEDULE

SHEET	JBOX	ITEM	MANUFACTURER	MODEL	DEVICE DESCRIPTION	DEVICE MOUNTING	DEVICE ELEVATION	WIRE #	QTY/ TYPE	CABLE NAME	SIGNAL TYPE	BACK BOX SIZE	PANEL	JBOX MOUNTING	JBOX ELEVATION	CABLE SOURCE	NOTES
TMC - TRANSPORTATION MANAGEMENT CENTER																	
Rm 116 - TRANSPORTATION MANAGEMENT CENTER - OPS FLOOR																	
E-7	JBX116-01	NET05-116	CISCO	AIR-CAP1602I-X-K9	AIRONET 1600WIRELESS-N ACCESS POINT	WALL SURFACE	+12'-0" AFF	N0176	1/N	-	NETWORK	4S	COVER W/GROMMET	WALL FLUSH	+12'-0" AFF	Rm 125	PROVIDE AC POWER RECEPTACLE ADJACENT TO LOW VOLTAGE JBOX
E-7	SPK02-116-01	SPK02-116-01	-	-	2-WAY 8" IN WALL SPEAKER	WALL FLUSH	+12'-0" AFF	S0106	1/S	-	SPEAKER	NA	NA	WALL FLUSH	+12'-0" AFF	Rm 125	-
E-7	SPK02-116-02	SPK02-116-02	-	-	2-WAY 8" IN WALL SPEAKER	WALL FLUSH	+12'-0" AFF	S0107	1/S	-	SPEAKER	NA	NA	WALL FLUSH	+12'-0" AFF	Rm 125	-
E-7	SPK02-116-03	SPK02-116-03	-	-	2-WAY 8" IN WALL SPEAKER	WALL FLUSH	+12'-0" AFF	S0108	1/S	-	SPEAKER	NA	NA	WALL FLUSH	+12'-0" AFF	Rm 125	-
E-7	SPK02-116-04	SPK02-116-04	-	-	2-WAY 8" IN WALL SPEAKER	WALL FLUSH	+12'-0" AFF	S0109	1/S	-	SPEAKER	NA	NA	WALL FLUSH	+12'-0" AFF	Rm 125	-
E-7	SPK02-116-05	SPK02-116-05	-	-	2-WAY 8" IN WALL SPEAKER	WALL FLUSH	+12'-0" AFF	S0110	1/S	-	SPEAKER	NA	NA	WALL FLUSH	+12'-0" AFF	Rm 125	-
E-7	SPK02-116-06	SPK02-116-06	-	-	2-WAY 8" IN WALL SPEAKER	WALL FLUSH	+12'-0" AFF	S0111	1/S	-	SPEAKER	NA	NA	WALL FLUSH	+12'-0" AFF	Rm 125	-
E-7	TSC01-116-01	TSC01-116-01	CRESTRON	V15-TILT-B	V-PANEL 15" HD TOUCH SCREEN (BLACK)	ON DESK	ON DESK	V0237	1/NS	CRESTRON DM-CBL-P	CONTROL	NA	NA	NA	NA	Rm 125	WIRE ROUTED UNDER FLOOR AND CONNECTS TO DEVICE
E-7	TSC01-116-02	TSC01-116-02	CRESTRON	V15-TILT-B	V-PANEL 15" HD TOUCH SCREEN (BLACK)	ON DESK	ON DESK	V0238	1/NS	CRESTRON DM-CBL-P	CONTROL	NA	NA	NA	NA	Rm 125	WIRE ROUTED UNDER FLOOR AND CONNECTS TO DEVICE
E-7	TSC01-116-03	TSC01-116-03	CRESTRON	V15-TILT-B	V-PANEL 15" HD TOUCH SCREEN (BLACK)	ON DESK	ON DESK	V0239	1/NS	CRESTRON DM-CBL-P	CONTROL	NA	NA	NA	NA	Rm 125	WIRE ROUTED UNDER FLOOR AND CONNECTS TO DEVICE
E-7	TSC01-116-04	TSC01-116-04	CRESTRON	V15-TILT-B	V-PANEL 15" HD TOUCH SCREEN (BLACK)	ON DESK	ON DESK	V0240	1/NS	CRESTRON DM-CBL-P	CONTROL	NA	NA	NA	NA	Rm 125	WIRE ROUTED UNDER FLOOR AND CONNECTS TO DEVICE
E-7	TSC01-116-05	TSC01-116-05	CRESTRON	V15-TILT-B	V-PANEL 15" HD TOUCH SCREEN (BLACK)	ON DESK	ON DESK	V0241	1/NS	CRESTRON DM-CBL-P	CONTROL	NA	NA	NA	NA	Rm 125	WIRE ROUTED UNDER FLOOR AND CONNECTS TO DEVICE
E-7	TSC01-116-06	TSC01-116-06	CRESTRON	V15-TILT-B	V-PANEL 15" HD TOUCH SCREEN (BLACK)	ON DESK	ON DESK	V0242	1/NS	CRESTRON DM-CBL-P	CONTROL	NA	NA	NA	NA	Rm 125	WIRE ROUTED UNDER FLOOR AND CONNECTS TO DEVICE
E-7	TSC01-116-07	TSC01-116-07	CRESTRON	V15-TILT-B	V-PANEL 15" HD TOUCH SCREEN (BLACK)	ON DESK	ON DESK	V0243	1/NS	CRESTRON DM-CBL-P	CONTROL	NA	NA	NA	NA	Rm 125	WIRE ROUTED UNDER FLOOR AND CONNECTS TO DEVICE
E-7	TSC01-116-08	TSC01-116-08	CRESTRON	V15-TILT-B	V-PANEL 15" HD TOUCH SCREEN (BLACK)	ON DESK	ON DESK	V0244	1/NS	CRESTRON DM-CBL-P	CONTROL	NA	NA	NA	NA	Rm 125	WIRE ROUTED UNDER FLOOR AND CONNECTS TO DEVICE
E-7	XMT01-116	XMT01-116	CRESTRON	DM-TX-401-S	DIGITALMEDIA 8G FIBER TRANSMITTER 401	WALL SURFACE	IN CONSOLE	N0227	1/Z	CRESTRON CRESFIBER8G-P	VIDEO	NA	NA	NA	NA	Rm 125	WIRE ROUTED UNDER FLOOR AND CONNECTS TO DEVICE

REVISED BY | DATE REVISED
JOSHUA MCNEILL | RANDY RATZLAFF
CALCULATED-DESIGNED BY | CHECKED BY
CONSULTANT FUNCTIONAL SUPERVISOR | STEVE HUFF
STATE OF CALIFORNIA - DEPARTMENT OF TRANSPORTATION
Caltrans

ELECTRICAL DETAILS
(FILL SCHEDULE)

APPROVED FOR ELECTRICAL WORK ONLY

E-29

LAST REVISION 04-01-15 | DATE PLOTTED => 13-MAY-2015 | TIME PLOTTED => 08:49

Dist	COUNTY	LOCATION	POST MILES TOTAL PROJECT	SHEET No.	TOTAL SHEETS
12	Ora	Var		31	91

REGISTERED CIVIL ENGINEER 2-25-15 DATE

May 04, 2015
PLANS APPROVAL DATE

REGISTERED PROFESSIONAL ENGINEER CARLOS ORTIZ No. 57535 Exp. 12-31-15 CIVIL STATE OF CALIFORNIA

THE STATE OF CALIFORNIA OR ITS OFFICERS OR AGENTS SHALL NOT BE RESPONSIBLE FOR THE ACCURACY OR COMPLETENESS OF SCANNED COPIES OF THIS PLAN SHEET.

RBF CONSULTING
14725 ALTON PKWY
IRVINE, CA 92618

NOTES:

1. SEE SHEETS E-2, E-3 & E-4 FOR GENERAL NOTES, ABBREVIATIONS AND LEGEND.

AV BOX AND FILL SCHEDULE

SHEET	JBOX	ITEM	MANUFACTURER	MODEL	DEVICE DESCRIPTION	DEVICE MOUNTING	DEVICE ELEVATION	WIRE #	QTY/ TYPE	CABLE NAME	SIGNAL TYPE	BACK BOX SIZE	PANEL	JBOX MOUNTING	JBOX ELEVATION	CABLE SOURCE	NOTES
Rm 123 - PROJECTION ROOM																	
E-7	AVR01-05	Exist CPU03-01	TBD	TBD	Exist - ATMS W/HUMMINGBIRD CLIENT	RACK	RACK	N0326	1/N	BELDEN 2413	NETWORK	NA	NA	FLOOR SURFACE	FLOOR	FAC NET	AV EQUIPMENT RACK
E-7	JBX123-05	RPD01-01-04	BARCO	OV-OLSF-721	70" LED-LIT REAR PROJECTION CUBE	FLOOR SURFACE	FLOOR	N0330-N0333	4/N	-	NETWORK	4S	COVER W/GROMMET	WALL SURFACE	AT DISPLAY	Rm 123	PROVIDE AC POWER RECEPTACLE ADJACENT TO LOW VOLTAGE JBOX
		VWP01-01	BARCO	R9899511_H2JP	TFN JP 2CH OUTPUT NODE	WALL SURFACE	AT DISPLAY	N0329	1/N	-	NETWORK						
E-7	JBX123-06	RPD01-05-08	BARCO	OV-OLSF-721	70" LED-LIT REAR PROJECTION CUBE	FLOOR SURFACE	FLOOR	N0335-N0338	4/N	-	NETWORK	4S	COVER W/GROMMET	WALL SURFACE	AT DISPLAY	Rm 123	PROVIDE AC POWER RECEPTACLE ADJACENT TO LOW VOLTAGE JBOX
		VWP01-02	BARCO	R9899511_H2JP	TFN JP 2CH OUTPUT NODE	WALL SURFACE	AT DISPLAY	N0334	1/N	-	NETWORK						
E-7	JBX123-07	RPD01-09-12	BARCO	OV-OLSF-721	70" LED-LIT REAR PROJECTION CUBE	FLOOR SURFACE	FLOOR	N0340-N0343	4/N	-	NETWORK	4S	COVER W/GROMMET	WALL SURFACE	AT DISPLAY	Rm 123	PROVIDE AC POWER RECEPTACLE ADJACENT TO LOW VOLTAGE JBOX
		VWP01-03	BARCO	R9899511_H2JP	TFN JP 2CH OUTPUT NODE	WALL SURFACE	AT DISPLAY	N0339	1/N	-	NETWORK						
E-7	JBX123-08	RPD01-13-16	BARCO	OV-OLSF-721	70" LED-LIT REAR PROJECTION CUBE	FLOOR SURFACE	FLOOR	N0345-N0348	4/N	-	NETWORK	4S	COVER W/GROMMET	WALL SURFACE	AT DISPLAY	Rm 123	PROVIDE AC POWER RECEPTACLE ADJACENT TO LOW VOLTAGE JBOX
		VWP01-04	BARCO	R9899511_H2JP	TFN JP 2CH OUTPUT NODE	WALL SURFACE	AT DISPLAY	N0344	1/N	-	NETWORK						
E-7	JBX123-09	RPD01-17-20	BARCO	OV-OLSF-721	70" LED-LIT REAR PROJECTION CUBE	FLOOR SURFACE	FLOOR	N0350-N0353	4/N	-	NETWORK	4S	COVER W/GROMMET	WALL SURFACE	AT DISPLAY	Rm 123	PROVIDE AC POWER RECEPTACLE ADJACENT TO LOW VOLTAGE JBOX
		VWP01-05	BARCO	R9899511_H2JP	TFN JP 2CH OUTPUT NODE	WALL SURFACE	AT DISPLAY	N0349	1/N	-	NETWORK						
E-7	JBX123-10	RPD01-21-24	BARCO	OV-OLSF-721	70" LED-LIT REAR PROJECTION CUBE	FLOOR SURFACE	FLOOR	N0355-N0358	4/N	-	NETWORK	4S	COVER W/GROMMET	WALL SURFACE	AT DISPLAY	Rm 123	PROVIDE AC POWER RECEPTACLE ADJACENT TO LOW VOLTAGE JBOX
		VWP01-06	BARCO	R9899511_H2JP	TFN JP 2CH OUTPUT NODE	WALL SURFACE	AT DISPLAY	N0354	1/N	-	NETWORK						
E-7	JBX123-11	RPD01-25-28	BARCO	OV-OLSF-721	70" LED-LIT REAR PROJECTION CUBE	FLOOR SURFACE	FLOOR	N0360-N0363	4/N	-	NETWORK	4S	COVER W/GROMMET	WALL SURFACE	AT DISPLAY	Rm 123	PROVIDE AC POWER RECEPTACLE ADJACENT TO LOW VOLTAGE JBOX
		VWP01-07	BARCO	R9899511_H2JP	TFN JP 2CH OUTPUT NODE	WALL SURFACE	AT DISPLAY	N0359	1/N	-	NETWORK						
E-7	JBX123-12	RPD01-29-32	BARCO	OV-OLSF-721	70" LED-LIT REAR PROJECTION CUBE	FLOOR SURFACE	FLOOR	N0365-N0368	4/N	-	NETWORK	4S	COVER W/GROMMET	WALL SURFACE	AT DISPLAY	Rm 123	PROVIDE AC POWER RECEPTACLE ADJACENT TO LOW VOLTAGE JBOX
		VWP01-08	BARCO	R9899511_H2JP	TFN JP 2CH OUTPUT NODE	WALL SURFACE	AT DISPLAY	N0364	1/N	-	NETWORK						
Rm 230 - VISITOR CORRIDOR																	
E-11	SPK01-TMC-1	SPK01-TMC-1	-	-	6.5 INCH CEILING SPEAKER, (150 W @ 16 OHMS)	CEILING FLUSH	CEILING	S0112	1/S	-	SPEAKER	NA	NA	CEILING FLUSH	CEILING	Rm 125	-
E-11	SPK01-TMC-2	SPK01-TMC-2	-	-	6.5 INCH CEILING SPEAKER, (150 W @ 16 OHMS)	CEILING FLUSH	CEILING	S0112A	1/S	-	SPEAKER	NA	NA	CEILING FLUSH	CEILING	SPK01-TMC-1	-
E-11	SPK01-TMC-3	SPK01-TMC-3	-	-	6.5 INCH CEILING SPEAKER, (150 W @ 16 OHMS)	CEILING FLUSH	CEILING	S0112B	1/S	-	SPEAKER	NA	NA	CEILING FLUSH	CEILING	SPK01-TMC-2	-
E-11	SPK01-TMC-4	SPK01-TMC-4	-	-	6.5 INCH CEILING SPEAKER, (150 W @ 16 OHMS)	CEILING FLUSH	CEILING	S0112C	1/S	-	SPEAKER	NA	NA	CEILING FLUSH	CEILING	SPK01-TMC-3	-

REVISED BY | DATE REVISED
JOSHUA MCNEILL | RANDY RATZLAFF
CALCULATED-DESIGNED BY | CHECKED BY
CONSULTANT FUNCTIONAL SUPERVISOR | STEVE HUFF

STATE OF CALIFORNIA - DEPARTMENT OF TRANSPORTATION
Caltrans

ELECTRICAL DETAILS
(FILL SCHEDULE)

APPROVED FOR ELECTRICAL WORK ONLY

E-30

LAST REVISION 04-01-15 | DATE PLOTTED => 13-MAY-2015 | TIME PLOTTED => 08:49

Dist	COUNTY	LOCATION	POST MILES TOTAL PROJECT	SHEET No.	TOTAL SHEETS
12	Ora	Var		32	91

REGISTERED CIVIL ENGINEER — DATE 2-25-15

May 04, 2015
PLANS APPROVAL DATE

REGISTERED PROFESSIONAL ENGINEER — CARLOS ORTIZ — No. 57535 — Exp. 12-31-15 — CIVIL — STATE OF CALIFORNIA

THE STATE OF CALIFORNIA OR ITS OFFICERS OR AGENTS SHALL NOT BE RESPONSIBLE FOR THE ACCURACY OR COMPLETENESS OF SCANNED COPIES OF THIS PLAN SHEET.

RBF CONSULTING
14725 ALTON PKWY
IRVINE, CA 92618

NOTES:

1. SEE SHEETS E-2, E-3 & E-4 FOR GENERAL NOTES, ABBREVIATIONS AND LEGEND.

AV BOX AND FILL SCHEDULE

SHEET	JBOX	ITEM	MANUFACTURER	MODEL	DEVICE DESCRIPTION	DEVICE MOUNTING	DEVICE ELEVATION	WIRE #	QTY/ TYPE	CABLE NAME	SIGNAL TYPE	BACK BOX SIZE	PANEL	JBOX MOUNTING	JBOX ELEVATION	CABLE SOURCE	NOTES
911 - 911 CHP CALL CENTER																	
Rm 112 - SUPERVISOR ROOM																	
E-8	JBX112-01	ICP09-112	CRESTRON	MP-WP181-C	MEDIA PRESENTATION WALL PLATE - DIGITALMEDIA 8G+	WALL FLUSH	+18" AFF	V0246	1/NS	CRESTRON DM-CBL-P	CONTROL	1G	ICP09-112	WALL FLUSH	+18" AFF	Rm 125	PROVIDE ADJACENT AC POWER RECEPTACLE
Rm 113 - 911 CALL CENTER																	
E-8	JBX113-01	RCV02-113-01	CRESTRON	DM-RMC-SCALER-S	DIGITALMEDIA 8G FIBER RECEIVER & ROOM CONTROLLER W/SCALER	WALL SURFACE	AT DISPLAY	N0219	1/Z	CRESTRON CRESFIBER8G-P	VIDEO	1G	ICP04-113-01	WALL FLUSH	+60" AFF	Rm 125	PROVIDE ADJACENT AC POWER RECEPTACLE
E-8	JBX113-02	RCV02-113-02	CRESTRON	DM-RMC-SCALER-S	DIGITALMEDIA 8G FIBER RECEIVER & ROOM CONTROLLER W/SCALER	WALL SURFACE	AT DISPLAY	N0220	1/Z	CRESTRON CRESFIBER8G-P	VIDEO	1G	ICP04-113-02	WALL FLUSH	+60" AFF	Rm 125	PROVIDE ADJACENT AC POWER RECEPTACLE
E-8	JBX113-03	XMT01-113	CRESTRON	DM-TX-401-S	DIGITALMEDIA 8G FIBER TRANSMITTER 401	WALL SURFACE	IN CABINET	N0226	1/Z	CRESTRON CRESFIBER8G-P	VIDEO	4S	COVER W/GROMMET	WALL FLUSH	+18" AFF	Rm 125	PROVIDE ADJACENT AC POWER RECEPTACLE
MSGX - MESSAGE DISPLAY BOARDS																	
Rm 123 - PROJECTION ROOM																	
E-7	JBX123-01	RPD01-33	BARCO	OV-OLSF-721	70" LED-LIT REAR PROJECTION CUBE	FLOOR SURFACE	ABOVE VIDEO WALL	N0189	1/N	-	NETWORK	4S	COVER W/GROMMET	WALL SURFACE	AT DISPLAY	Rm 125	PROVIDE AC POWER RECEPTACLE ADJACENT TO LOW VOLTAGE JBOX
		DVP01-116-01	-	-	HD DIGITAL SIGNAGE PLAYER	WALL SURFACE	AT DISPLAY	V0438	1/N	-	NETWORK	4S	COVER W/GROMMET	WALL SURFACE	AT DISPLAY	FAC NET	
E-7	JBX123-02	RPD01-34	BARCO	OV-OLSF-721	70" LED-LIT REAR PROJECTION CUBE	FLOOR SURFACE	ABOVE VIDEO WALL	N0190	1/N	-	NETWORK	4S	COVER W/GROMMET	WALL SURFACE	AT DISPLAY	Rm 125	PROVIDE AC POWER RECEPTACLE ADJACENT TO LOW VOLTAGE JBOX
		DVP01-116-02	-	-	HD DIGITAL SIGNAGE PLAYER	WALL SURFACE	AT DISPLAY	V0439	1/N	-	NETWORK	4S	COVER W/GROMMET	WALL SURFACE	AT DISPLAY	FAC NET	
E-7	JBX123-03	RPD01-35	BARCO	OV-OLSF-721	70" LED-LIT REAR PROJECTION CUBE	FLOOR SURFACE	ABOVE VIDEO WALL	N0191	1/N	-	NETWORK	4S	COVER W/GROMMET	WALL SURFACE	AT DISPLAY	Rm 125	PROVIDE AC POWER RECEPTACLE ADJACENT TO LOW VOLTAGE JBOX
		DVP01-116-03	-	-	HD DIGITAL SIGNAGE PLAYER	WALL SURFACE	AT DISPLAY	V0440	1/N	-	NETWORK	4S	COVER W/GROMMET	WALL SURFACE	AT DISPLAY	FAC NET	
E-7	JBX123-04	RPD01-36	BARCO	OV-OLSF-721	70" LED-LIT REAR PROJECTION CUBE	FLOOR SURFACE	ABOVE VIDEO WALL	N0192	1/N	-	NETWORK	4S	COVER W/GROMMET	WALL SURFACE	AT DISPLAY	Rm 125	PROVIDE AC POWER RECEPTACLE ADJACENT TO LOW VOLTAGE JBOX
		DVP01-116-04	-	-	HD DIGITAL SIGNAGE PLAYER	WALL SURFACE	AT DISPLAY	V0441	1/N	-	NETWORK	4S	COVER W/GROMMET	WALL SURFACE	AT DISPLAY	FAC NET	
Rm 242 - EOC (1)																	
E-10	JBX242-06	LCD03-242-03	-	-	82" LCD DISPLAY 1920 X 1080; (LANDSCAPE ONLY)	WALL SURFACE	+60" AFF	N0205	1/N	-	NETWORK	4S	COVER W/GROMMET	WALL FLUSH	+60" AFF	Rm 245	PROVIDE ADJACENT AC POWER RECEPTACLE
		DVP01-242	-	-	HD DIGITAL SIGNAGE PLAYER	WALL SURFACE	AT DISPLAY	N0267	1/N	-	NETWORK	4S	COVER W/GROMMET	WALL FLUSH	+60" AFF	FAC NET	

REVISED BY | DATE REVISED
JOSHUA MCNEILL | RANDY RATZLAFF
CALCULATED-DESIGNED BY | CHECKED BY
CONSULTANT FUNCTIONAL SUPERVISOR | STEVE HUFF

STATE OF CALIFORNIA - DEPARTMENT OF TRANSPORTATION
Caltrans

ELECTRICAL DETAILS
(FILL SCHEDULE)

APPROVED FOR ELECTRICAL WORK ONLY

E-31

LAST REVISION 04-01-15 | DATE PLOTTED => 13-MAY-2015 | TIME PLOTTED => 08:49

Dist	COUNTY	LOCATION	POST MILES TOTAL PROJECT	SHEET No.	TOTAL SHEETS
12	Ora	Var		33	91

REGISTERED CIVIL ENGINEER 2-25-15 DATE

May 04, 2015
PLANS APPROVAL DATE

REGISTERED PROFESSIONAL ENGINEER CARLOS ORTIZ No. 57535 Exp. 12-31-15 CIVIL STATE OF CALIFORNIA

THE STATE OF CALIFORNIA OR ITS OFFICERS OR AGENTS SHALL NOT BE RESPONSIBLE FOR THE ACCURACY OR COMPLETENESS OF SCANNED COPIES OF THIS PLAN SHEET.

RBF CONSULTING
14725 ALTON PKWY
IRVINE, CA 92618

NOTES:

1. SEE SHEETS E-2, E-3 & E-4 FOR GENERAL NOTES, ABBREVIATIONS AND LEGEND.

AV BOX AND FILL SCHEDULE

SHEET	JBOX	ITEM	MANUFACTURER	MODEL	DEVICE DESCRIPTION	DEVICE MOUNTING	DEVICE ELEVATION	WIRE #	QTY/ TYPE	CABLE NAME	SIGNAL TYPE	BACK BOX SIZE	PANEL	JBOX MOUNTING	JBOX ELEVATION	CABLE SOURCE	NOTES
LAB - LAB																	
Rm 227/228 - LAB																	
E-9	JBX227-01	ICP50-227	CUSTOM	CUSTOM (RM. 227)	ALLOWANCE FOR INTERCONNECT PANEL 12"X12" (RM. 227 - TO FAC)	WALL FLUSH	+18" AFF	N0200	1/N	-	NETWORK	12X12	ICP50-227	WALL FLUSH	+18" AFF	Rm 245	ICP02-227 - RACK CONNECTION PANEL. PROVIDE ADJACENT AC POWER RECEPTACLE
								V0131	1/V	-	VIDEO	12X12	ICP50-227	WALL FLUSH	+18" AFF	GVS	
								N0207	1/Z	CRESTRON CRESFIBER8G-P	NETWORK	12X12	ICP50-227	WALL FLUSH	+18" AFF	Rm 245	
								N0173	1/Z	CRESTRON CRESFIBER8G-P	NETWORK	12X12	ICP50-227	WALL FLUSH	+18" AFF	Rm 125	
								N0241, N0250	2/N	-	NETWORK	12X12	ICP50-227	WALL FLUSH	+18" AFF	FAC NET	
								N0210, V0295	2/Z	CRESTRON CRESFIBER8G-P	VIDEO	12X12	ICP50-227	WALL FLUSH	+18" AFF	Rm 125	
E-9	JBX228-01	VSP04-227	-	-	MINI CONVERTOR SDI TO HDMI	-	-	V0132	1/V	-	VIDEO	4S	COVER W/GROMMET	WALL FLUSH	+60" AFF	GVS	PROVIDE ADJACENT AC POWER RECEPTACLE
		RCV01-227	CRESTRON	DM-RMC-SCALER-C	DIGITALMEDIA 8G+ RECEIVER & ROOM CONTROLLER W/SCALER	WALL SURFACE	AT DISPLAY	V0292	1/NS	CRESTRON DM-CBL-P	VIDEO	4S	COVER W/GROMMET	WALL FLUSH	+60" AFF	Rm 227/228	
		LCD02-228	-	-	65" LED LCD DISPLAY (1920 X 1080) PROFESSIONAL 24/7 RATED	WALL SURFACE	+60" AFF	A0219, A0220	2/A	-	AUDIO						
Rm 242/243 - EOC TRAINING (1)																	
Rm 242 - EOC (1)																	
E-10	JBX242-01	NET02-242	CISCO	SRW2008MP-K9	SG300-10MP: 10 PORT LAYER 3 MANAGED ETHERNET SWITCH (POE)	IN RACK	IN RACK	N0201	1/N	-	NETWORK	4S	COVER W/GROMMET	WALL FLUSH	+18" AFF	Rm 245	PROVIDE AC POWER RECEPTACLE ADJACENT TO LOW VOLTAGE JBOX
		NET02-242	CISCO	SRW2008MP-K9	SG300-10MP: 10 PORT LAYER 3 MANAGED ETHERNET SWITCH (POE)	IN RACK	IN RACK	N0174	1/Z	CRESTRON CRESFIBER8G-P	NETWORK	4S	COVER W/GROMMET	WALL FLUSH	+18" AFF	Rm 125	
		VSW03G-242-02	CRESTRON	DMC-SDI	SDI INPUT CARD FOR DM SWITCHER	IN RACK	IN RACK	V0134	1/V	-	VIDEO	4S	COVER W/GROMMET	WALL FLUSH	+18" AFF	GVS	
		VSW03G-242-03	CRESTRON	DMC-SDI	SDI INPUT CARD FOR DM SWITCHER	IN RACK	IN RACK	V0135	1/V	-	VIDEO						
		VSW03G-242-01	CRESTRON	DMC-SDI	SDI INPUT CARD FOR DM SWITCHER	IN RACK	IN RACK	V0133	1/V	-	VIDEO						
		VSW03G-242-04	CRESTRON	DMC-SDI	SDI INPUT CARD FOR DM SWITCHER	IN RACK	IN RACK	V0136	1/V	-	VIDEO						
		VSW03-242	CRESTRON	DM-MD16X16	16X16 DIGITAL MEDIA SWITCHER W/REDUNDANT POWER SUPPLY	IN RACK	IN RACK	N0211	1/Z	CRESTRON CRESFIBER8G-P	VIDEO	4S	COVER W/GROMMET	WALL FLUSH	+18" AFF	Rm 125	PROVIDE AC POWER RECEPTACLE ADJACENT TO LOW VOLTAGE JBOX
		VSW03-242	CRESTRON	DM-MD16X16	16X16 DIGITAL MEDIA SWITCHER W/REDUNDANT POWER SUPPLY	IN RACK	IN RACK	N0211	1/Z	CRESTRON CRESFIBER8G-P	VIDEO						
		Exist-VTC01-242	POLYCOM	VSX8000	Exist - VIDEO CONFERENCE UNIT	IN RACK	IN RACK	N0266	1/N	BELDEN 2413	NETWORK	4S	COVER W/GROMMET	WALL FLUSH	+18" AFF	FAC NET	PROVIDE AC POWER RECEPTACLE ADJACENT TO LOW VOLTAGE JBOX
		Exist CPU02-242	-	-	Exist - COMPUTER	IN RACK	IN RACK	-	1/N	BELDEN 2413	NETWORK						
E-10	JBX242-03	RCV01-242-01	CRESTRON	DM-RMC-SCALER-C	DIGITALMEDIA 8G+ RECEIVER & ROOM CONTROLLER W/SCALER	WALL SURFACE	AT DISPLAY	V0323	1/NS	CRESTRON DM-CBL-P	VIDEO	4S	COVER W/GROMMET	WALL FLUSH	+60" AFF	Rm 242	PROVIDE ADJACENT AC POWER RECEPTACLE
		LCD03-242-01	-	-	65" LCD DISPLAY 1920 X 1080; (LANDSCAPE ONLY)	WALL SURFACE	+60" AFF	A0258A, A0258B	2/A	-	AUDIO						
E-10	JBX242-04	RCV01-242-02	CRESTRON	DM-RMC-SCALER-C	DIGITALMEDIA 8G+ RECEIVER & ROOM CONTROLLER W/SCALER	WALL SURFACE	AT DISPLAY	V0324	1/NS	CRESTRON DM-CBL-P	VIDEO	4S	COVER W/GROMMET	WALL FLUSH	+60" AFF	Rm 242	PROVIDE ADJACENT AC POWER RECEPTACLE
		LCD03-242-02	-	-	65" LCD DISPLAY 1920 X 1080; (LANDSCAPE ONLY)	WALL SURFACE	+60" AFF	A0259A, A0259B	2/A	-	AUDIO						

APPROVED FOR ELECTRICAL WORK ONLY

ELECTRICAL DETAILS
(FILL SCHEDULE)

E-32

STATE OF CALIFORNIA - DEPARTMENT OF TRANSPORTATION
Caltrans

CONSULTANT FUNCTIONAL SUPERVISOR: STEVE HUFF
CALCULATED-DESIGNED BY: JOSHUA MCNEILL
CHECKED BY: RANDY RATZLAFF
REVISED BY
DATE REVISED

LAST REVISION 04-01-15
DATE PLOTTED => 13-MAY-2015
TIME PLOTTED => 08:49

Dist	COUNTY	LOCATION	POST MILES TOTAL PROJECT	SHEET No.	TOTAL SHEETS
12	Ora	Var		34	91

REGISTERED CIVIL ENGINEER — DATE 2-25-15

May 04, 2015
PLANS APPROVAL DATE

REGISTERED PROFESSIONAL ENGINEER — CARLOS ORTIZ — No. 57535 — Exp. 12-31-15 — CIVIL — STATE OF CALIFORNIA

THE STATE OF CALIFORNIA OR ITS OFFICERS OR AGENTS SHALL NOT BE RESPONSIBLE FOR THE ACCURACY OR COMPLETENESS OF SCANNED COPIES OF THIS PLAN SHEET.

RBF CONSULTING
14725 ALTON PKWY
IRVINE, CA 92618

NOTES:

1. SEE SHEETS E-2, E-3 & E-4 FOR GENERAL NOTES, ABBREVIATIONS AND LEGEND.

AV BOX AND FILL SCHEDULE

SHEET	JBOX	ITEM	MANUFACTURER	MODEL	DEVICE DESCRIPTION	DEVICE MOUNTING	DEVICE ELEVATION	WIRE #	QTY/ TYPE	CABLE NAME	SIGNAL TYPE	BACK BOX SIZE	PANEL	JBOX MOUNTING	JBOX ELEVATION	CABLE SOURCE	NOTES
Rm 242 - EOC (1)																	
E-10	JBX242-05	TBD02-242	CRESTRON	-	ALLOWANCE FOR CRESTRON INTERFACE TO POLYCOM	WALL SURFACE	AT VTC UNIT	-	1/NS	CRESTRON DM-CBL-P	VIDEO	4S	COVER W/GROMMET	WALL FLUSH	+60" AFF	Rm 242	PROVIDE ADJACENT AC POWER RECEPTACLE
		TBD01-242	CRESTRON	-	ALLOWANCE FOR CRESTRON INTERFACE FROM POLYCOM	WALL SURFACE	AT VTC UNIT	-	1/NS	CRESTRON DM-CBL-P	VIDEO						
		Exist-VTC01-242	POLYCOM	VSX8000	Exist - VIDEO CONFERENCE UNIT	IN RACK	IN RACK	V0475	1/VX	POLYCOM	VIDEO						
E-10	JBX242-07	RCV01-242-03	CRESTRON	DM-RMC-SCALER-C	DIGITALMEDIA 8G+ RECEIVER & ROOM CONTROLLER W/SCALER	CEILING SURFACE	AT PROJECTOR	V0325	1/NS	CRESTRON DM-CBL-P	VIDEO	4S	COVER W/GROMMET	CEILING FLUSH	CEILING	Rm 242	PROVIDE AC POWER RECEPTACLE ADJACENT TO LOW VOLTAGE JBOX
E-10	JBX242-08	ICP05-242	CUSTOM	CUSTOM	(2) GANG: "F" CONNECTOR FOR THREADED ANTENNA MOUNT (XMTR)	CEILING SURFACE	ABOVE CEILING TILES	A0206	1/R	-	RF	4S	ICP05-242	CEILING SURFACE	ABOVE CEILING TILES	Rm 125	JBX, PANEL AND ANTENNA TO BE INSTALLED ABOVE CEILING TILES
E-10	JBX242-09	ICP06-242-01	CUSTOM	CUSTOM	(2) GANG, "F" CONNECTOR, THREADED ANTENNA MOUNT (RCVR)	CEILING SURFACE	ABOVE CEILING TILES	A0189	1/R	-	RF	4S	ICP06-242-01	CEILING SURFACE	ABOVE CEILING TILES	Rm 125	JBX, PANEL AND ANTENNA TO BE INSTALLED ABOVE CEILING TILES
E-10	JBX242-10	ICP06-242-02	CUSTOM	CUSTOM	(2) GANG, "F" CONNECTOR, THREADED ANTENNA MOUNT (RCVR)	CEILING SURFACE	ABOVE CEILING TILES	A0190	1/R	-	RF	4S	ICP06-242-02	CEILING SURFACE	ABOVE CEILING TILES	Rm 125	JBX, PANEL AND ANTENNA TO BE INSTALLED ABOVE CEILING TILES
E-10	JBX242-11	XTM04-242-02	CRESTRON	DM-TX-200-C-2G	WALL PLATE DIGITALMEDIA 8G+ TRANSMITTER 200	WALL FLUSH	IN DESK	V0308	1/NS	CRESTRON DM-CBL-P	VIDEO	4S	XTM04-242-02	WALL FLUSH	IN DESK	Rm 242	XMT04 TO BE INSTALLED FLUSH MOUNTED IN EXISTING DESK.
E-10	JBX242-12	XTM04-242-03	CRESTRON	DM-TX-200-C-2G	WALL PLATE DIGITALMEDIA 8G+ TRANSMITTER 200	WALL FLUSH	IN DESK	V0309	1/NS	CRESTRON DM-CBL-P	VIDEO	4S	XTM04-242-03	WALL FLUSH	IN DESK	Rm 242	XMT04 TO BE INSTALLED FLUSH MOUNTED IN EXISTING DESK.
E-10	JBX242-13	CTLXX-242	CRESTRON	-	FLUSH MOUNTED WALL CONTROL	WALL FLUSH	+48" AFF	N0206	1/N	-	NETWORK	1G	CTL0XX-242	WALL FLUSH	+48" AFF	Rm 245	-
E-10	Exist-FBX01-242	XTM04-242-01	CRESTRON	DM-TX-200-C-2G	WALL PLATE DIGITALMEDIA 8G+ TRANSMITTER 200	FLOOR FLUSH	IN FLOOR BOX	V0298	1/NS	CRESTRON DM-CBL-P	VIDEO	NA	CUSTOM	FLOOR FLUSH	FLOOR	Rm 242	EXISTING FLOOR BOX WITH NEW PANELS ADDED
		ICP01-242	CUSTOM	CUSTOM	FLOOR BOX CONNECTION PANEL (4-GANG); (8) XLR3F, (2) RJ-45	FLOOR FLUSH	IN FLOOR BOX	N0255	1/N	-	NETWORK	NA	CUSTOM	FLOOR FLUSH	FLOOR	FAC NET	
		ICP01-242	CUSTOM	CUSTOM	FLOOR BOX CONNECTION PANEL (4-GANG); (8) XLR3F, (2) RJ-45	FLOOR FLUSH	IN FLOOR BOX	N0256	1/N	-	NETWORK						
		ICP01-242	CUSTOM	CUSTOM	FLOOR BOX CONNECTION PANEL (4-GANG); (8) XLR3F, (2) RJ-45	FLOOR FLUSH	IN FLOOR BOX	A0239-A0246	8/A	-	AUDIO	NA	CUSTOM	FLOOR FLUSH	FLOOR	Rm 242	
E-10	SPK01-242-01	SPK01-242-01	-	-	6.5 INCH CEILING SPEAKER, (150 W @ 16 OHMS)	CEILING FLUSH	CEILING	S0102	1/S	-	SPEAKER	NA	NA	CEILING FLUSH	CEILING	Rm 125	-
E-10	SPK01-242-02	SPK01-242-02	-	-	6.5 INCH CEILING SPEAKER, (150 W @ 16 OHMS)	CEILING FLUSH	CEILING	S0102A	1/S	-	SPEAKER	NA	NA	CEILING FLUSH	CEILING	SPK01-242-01	-
Rm 243 - EOC (2)																	
E-10	JBX243-01	RCV01-243-01	CRESTRON	DM-RMC-SCALER-C	DIGITALMEDIA 8G+ RECEIVER & ROOM CONTROLLER W/SCALER	WALL SURFACE	AT DISPLAY	V0326	1/NS	CRESTRON DM-CBL-P	VIDEO	4S	COVER W/GROMMET	WALL FLUSH	+60" AFF	Rm 242	PROVIDE AC POWER RECEPTACLE ADJACENT TO LOW VOLTAGE JBOX
		LCD03-243-01	-	-	65" LCD DISPLAY 1920 X 1080; (LANDSCAPE ONLY)	WALL SURFACE	+60" AFF	A0260A, A0260B	2/A	-	AUDIO						
E-10	JBX243-02	XTM04-243-02	CRESTRON	DM-TX-200-C-2G	WALL PLATE DIGITALMEDIA 8G+ TRANSMITTER 200	WALL FLUSH	+40" AFF	V0310	1/NS	CRESTRON DM-CBL-P	VIDEO	4S	XTM04-243-02	WALL FLUSH	+40" AFF	Rm 242	-
E-10	Exist-FBX01-243	XTM04-243-01	CRESTRON	DM-TX-200-C-2G	WALL PLATE DIGITALMEDIA 8G+ TRANSMITTER 200	FLOOR FLUSH	IN FLOOR BOX	V0299	1/NS	CRESTRON DM-CBL-P	VIDEO	NA	CUSTOM	FLOOR FLUSH	FLOOR	Rm 242	EXISTING FLOOR BOX WITH NEW PANELS ADDED
		ICP01-243	CUSTOM	CUSTOM	FLOOR BOX CONNECTION PANEL (4-GANG); (8) XLR3F, (2) RJ-45	FLOOR FLUSH	IN FLOOR BOX	N0257	1/N	-	NETWORK	NA	CUSTOM	FLOOR FLUSH	FLOOR	FAC NET	
		ICP01-243	CUSTOM	CUSTOM	FLOOR BOX CONNECTION PANEL (4-GANG); (8) XLR3F, (2) RJ-45	FLOOR FLUSH	IN FLOOR BOX	N0258	1/N	-	NETWORK						
		ICP01-243	CUSTOM	CUSTOM	FLOOR BOX CONNECTION PANEL (4-GANG); (8) XLR3F, (2) RJ-45	FLOOR FLUSH	IN FLOOR BOX	A0247-A0254	8/A	-	AUDIO	NA	CUSTOM	FLOOR FLUSH	FLOOR	Rm 242	
E-10	SPK01-243-01	SPK01-243-01	-	-	6.5 INCH CEILING SPEAKER, (150 W @ 16 OHMS)	CEILING FLUSH	CEILING	S0101	1/S	-	SPEAKER	NA	NA	CEILING FLUSH	CEILING	Rm 125	-
E-10	SPK01-243-02	SPK01-243-02	-	-	6.5 INCH CEILING SPEAKER, (150 W @ 16 OHMS)	CEILING FLUSH	CEILING	S0101A	1/S	-	SPEAKER	NA	NA	CEILING FLUSH	CEILING	SPK01-243-01	-

ELECTRICAL DETAILS
(FILL SCHEDULE)

APPROVED FOR ELECTRICAL WORK ONLY

E-33

STATE OF CALIFORNIA - DEPARTMENT OF TRANSPORTATION — Caltrans

CONSULTANT FUNCTIONAL SUPERVISOR: STEVE HUFF
CALCULATED-DESIGNED BY: JOSHUA MCNEILL
CHECKED BY: RANDY RATZLAFF
REVISED BY / DATE REVISED

LAST REVISION 04-01-15 — DATE PLOTTED => 13-MAY-2015 — TIME PLOTTED => 08:49

Dist	COUNTY	LOCATION	POST MILES TOTAL PROJECT	SHEET No.	TOTAL SHEETS
12	Ora	Var		35	91

REGISTERED CIVIL ENGINEER — DATE 2-25-15

May 04, 2015
PLANS APPROVAL DATE

REGISTERED PROFESSIONAL ENGINEER — CARLOS ORTIZ — No. 57535 — Exp. 12-31-15 — CIVIL — STATE OF CALIFORNIA

THE STATE OF CALIFORNIA OR ITS OFFICERS OR AGENTS SHALL NOT BE RESPONSIBLE FOR THE ACCURACY OR COMPLETENESS OF SCANNED COPIES OF THIS PLAN SHEET.

RBF CONSULTING
14725 ALTON PKWY
IRVINE, CA 92618

NOTES:

1. SEE SHEETS E-2, E-3 & E-4 FOR GENERAL NOTES, ABBREVIATIONS AND LEGEND.

AV BOX AND FILL SCHEDULE

SHEET	JBOX	ITEM	MANUFACTURER	MODEL	DEVICE DESCRIPTION	DEVICE MOUNTING	DEVICE ELEVATION	WIRE #	QTY/ TYPE	CABLE NAME	SIGNAL TYPE	BACK BOX SIZE	PANEL	JBOX MOUNTING	JBOX ELEVATION	CABLE SOURCE	NOTES
Rm 215 - VIDEO CONFERENCE ROOM Rm 215 - VTC RM																	
E-11	AVR03-215	Exist-VTC01-215	POLYCOM	VSX8000	Exist - VIDEO CONFERENCE UNIT	IN RACK	IN RACK	N0281	1/N	BELDEN 2413	NETWORK	NA	NA	FLOOR SURFACE	FLOOR	FAC NET	AV EQUIPMENT RACK
E-11	FLB01-215	FLB01-215	-	-	FLOOR-MOUNTED RACEWAY - CARPET INLAY, W/AC US (20A MAX), PREWIRED CONDUIT	FLOOR SURFACE	FLOOR	V0258	1/NS	CRESTRON DM-CBL-P	CONTROL	NA	NA	FLOOR SURFACE	FLOOR	JBX215-02	FLOOR-MOUNTED RACEWAY INSTALLED UNDER CARPET
								N0286, N0288, N0290, N0292	4/N	-	NETWORK					FAC NET	
								V0373-V0376, V0378-V0381	8/NS	CRESTRON DM-CBL-P	VIDEO					JBX215-02	
E-11	JBX215-01	ICP40-215	CUSTOM	CUSTOM (RM. 215)	ALLOWANCE FOR INTERCONNECT PANEL 12"X12" (RM. 215 - TO FAC)	WALL FLUSH	+18" AFF	N0280	1/N	-	NETWORK	12X12	ICP 40-215	WALL FLUSH	+18" AFF	FAC NET	ICP40-215 - RACK CONNECTION PANEL. PROVIDE ADJACENT AC POWER RECEPTACLE
								N0203	1/N	-	NETWORK					Rm 245	
								V0138	1/V	-	VIDEO					GVS	
								N0132	1/Z	CRESTRON CRESFIBER8G-P	NETWORK					Rm 125	
								N0370	1/Z	CRESTRON CRESFIBER8G-P	NETWORK					Rm 245	
								N0212, V0359	2/Z	CRESTRON CRESFIBER8G-P	VIDEO					Rm 125	
E-11	JBX215-03	VSP04-215-01	-	-	MINI CONVERTOR SDI TO HDMI	WALL SURFACE	AT DISPLAY	V0139	1/V	-	VIDEO	4S	COVER W/GROMMET	WALL FLUSH	+60" AFF	GVS	PROVIDE ADJACENT AC POWER RECEPTACLE
		RCV01-215-01	CRESTRON	DM-RMC-SCALER-C	DIGITALMEDIA 8G+ RECEIVER & ROOM CONTROLLER W/SCALER	WALL SURFACE	AT DISPLAY	V0353	1/NS	CRESTRON DM-CBL-P	VIDEO					Rm 215	
		LCD02-215-01	-	-	65" LED LCD DISPLAY (1920 X 1080) PROFESSIONAL 24/7 RATED	WALL SURFACE	+60" AFF	A0270, A0271	2/A	-	AUDIO						
E-11	JBX215-04	VSP04-215-02	-	-	MINI CONVERTOR SDI TO HDMI	WALL SURFACE	AT DISPLAY	V0140	1/V	-	VIDEO	4S	COVER W/GROMMET	WALL FLUSH	+60" AFF	GVS	PROVIDE ADJACENT AC POWER RECEPTACLE
		RCV01-215-02	CRESTRON	DM-RMC-SCALER-C	DIGITALMEDIA 8G+ RECEIVER & ROOM CONTROLLER W/SCALER	WALL SURFACE	AT DISPLAY	V0355	1/NS	CRESTRON DM-CBL-P	VIDEO					Rm 215	
		LCD02-215-02	-	-	65" LED LCD DISPLAY (1920 X 1080) PROFESSIONAL 24/7 RATED	WALL SURFACE	+60" AFF	A0272, A0273	2/A	-	AUDIO						
E-11	JBX215-05	ICP05-215	CUSTOM	CUSTOM	(2) GANG: "F" CONNECTOR FOR THREADED ANTENNA MOUNT (XMTR)	CEILING SURFACE	ABOVE CEILING TILES	A0205	1/R	-	RF	4S	ICP05-215	CEILING SURFACE	ABOVE CEILING TILES	Rm 125	JBX, PANEL AND ANTENNA TO BE INSTALLED ABOVE CEILING TILES
E-11	JBX215-06	ICP06-215-01	CUSTOM	CUSTOM	(2) GANG, "F" CONNECTOR, THREADED ANTENNA MOUNT (RCVR)	CEILING SURFACE	ABOVE CEILING TILES	A0187	1/R	-	RF	4S	ICP06-215-01	CEILING SURFACE	ABOVE CEILING TILES	Rm 125	JBX, PANEL AND ANTENNA TO BE INSTALLED ABOVE CEILING TILES
E-11	JBX215-07	ICP06-215-02	CUSTOM	CUSTOM	(2) GANG, "F" CONNECTOR, THREADED ANTENNA MOUNT (RCVR)	CEILING SURFACE	ABOVE CEILING TILES	A0188	1/R	-	RF	4S	ICP06-215-02	CEILING SURFACE	ABOVE CEILING TILES	Rm 125	JBX, PANEL AND ANTENNA TO BE INSTALLED ABOVE CEILING TILES
E-11	JBX215-08	TBD01-215	CRESTRON	-	ALLOWANCE FOR CRESTRON INTERFACE FROM POLYCOM	-	-	-	1/NS	CRESTRON DM-CBL-P	VIDEO	4S	COVER W/GROMMET	WALL FLUSH	+60" AFF	Rm 215	PROVIDE ADJACENT AC POWER RECEPTACLE
		TBD02-215	CRESTRON	-	ALLOWANCE FOR CRESTRON INTERFACE TO POLYCOM	-	-	-	1/NS	CRESTRON DM-CBL-P	VIDEO						
		Exist-VTC01-215	POLYCOM	VSX8000	Exist - VIDEO CONFERENCE UNIT	IN RACK	IN RACK	V0332	1/VX	POLYCOM	VIDEO						
E-11	SPK01-215-01	SPK01-215-01	-	-	6.5 INCH CEILING SPEAKER, (150 W @ 16 OHMS)	CEILING FLUSH	CEILING	S0103	1/S	-	SPEAKER	NA	NA	CEILING FLUSH	CEILING	Rm 125	-
E-11	SPK01-215-02	SPK01-215-02	-	-	6.5 INCH CEILING SPEAKER, (150 W @ 16 OHMS)	CEILING FLUSH	CEILING	S0103A	1/S	-	SPEAKER	NA	NA	CEILING FLUSH	CEILING	SPK01-215-01	-
E-11	SPK01-215-03	SPK01-215-03	-	-	6.5 INCH CEILING SPEAKER, (150 W @ 16 OHMS)	CEILING FLUSH	CEILING	S0103B	1/S	-	SPEAKER	NA	NA	CEILING FLUSH	CEILING	SPK01-215-02	-
E-11	SPK01-215-04	SPK01-215-04	-	-	6.5 INCH CEILING SPEAKER, (150 W @ 16 OHMS)	CEILING FLUSH	CEILING	S0103C	1/S	-	SPEAKER	NA	NA	CEILING FLUSH	CEILING	SPK01-215-03	-

ELECTRICAL DETAILS
(FILL SCHEDULE)

APPROVED FOR ELECTRICAL WORK ONLY

E-34

REVISED BY | DATE REVISED
JOSHUA MCNEILL | RANDY RATZLAFF
CALCULATED-DESIGNED BY | CHECKED BY
CONSULTANT FUNCTIONAL SUPERVISOR | STEVE HUFF
STATE OF CALIFORNIA - DEPARTMENT OF TRANSPORTATION
Caltrans

LAST REVISION 04-01-15 | DATE PLOTTED => 13-MAY-2015 | TIME PLOTTED => 08:49

Dist	COUNTY	LOCATION	POST MILES TOTAL PROJECT	SHEET No.	TOTAL SHEETS
12	Ora	Var		36	91

REGISTERED CIVIL ENGINEER 2-25-15 DATE

May 04, 2015
PLANS APPROVAL DATE

REGISTERED PROFESSIONAL ENGINEER CARLOS ORTIZ No. 57535 Exp. 12-31-15 CIVIL STATE OF CALIFORNIA

THE STATE OF CALIFORNIA OR ITS OFFICERS OR AGENTS SHALL NOT BE RESPONSIBLE FOR THE ACCURACY OR COMPLETENESS OF SCANNED COPIES OF THIS PLAN SHEET.

RBF CONSULTING
14725 ALTON PKWY
IRVINE, CA 92618

NOTES:

1. SEE SHEETS E-2, E-3 & E-4 FOR GENERAL NOTES, ABBREVIATIONS AND LEGEND.

AV BOX AND FILL SCHEDULE

SHEET	JBOX	ITEM	MANUFACTURER	MODEL	DEVICE DESCRIPTION	DEVICE MOUNTING	DEVICE ELEVATION	WIRE #	QTY/ TYPE	CABLE NAME	SIGNAL TYPE	BACK BOX SIZE	PANEL	JBOX MOUNTING	JBOX ELEVATION	CABLE SOURCE	NOTES
Rm 213 - VISITOR ROOM																	
Rm 213 - VISITOR'S CTR																	
E-11	FLB01-213	FLB01-213	-	-	FLOOR-MOUNTED RACEWAY - CARPET INLAY, W/AC US (20A MAX), PREWIRED CONDUIT	FLOOR SURFACE	FLOOR	V0429	1/NS	CRESTRON DM-CBL-P	CONTROL	NA	NA	FLOOR SURFACE	FLOOR	JBX213-01	FLOOR-MOUNTED RACEWAY INSTALLED UNDER CARPET
								N0323, N0325	2/N	-	NETWORK					FAC NET	
								V0435, V0436	2/NS	CRESTRON DM-CBL-P	VIDEO					JBX213-01	
E-11	JBX213-01	ICP30-213	CUSTOM	CUSTOM (RM. 213)	ALLOWANCE FOR INTERCONNECT PANEL 12"X12" (RM. 213 - TO FAC)	WALL FLUSH	+18" AFF	N0311	1/N	-	NETWORK	12X12	ICP30-213	WALL FLUSH	+18" AFF	FAC NET	ICP30-213 - RACK CONNECTION PANEL. PROVIDE ADJACENT AC POWER RECEPTACLE
								N0202	1/N	-	NETWORK					Rm 245	
								V0141	1/V	-	VIDEO					GVS	
								V0130	1/Z	CRESTRON CRESFIBER8G-P	NETWORK					Rm 125	
								N0209	1/Z	CRESTRON CRESFIBER8G-P	NETWORK					Rm 245	
								N0213, V0430	2/Z	CRESTRON CRESFIBER8G-P	VIDEO					Rm 125	
E-11	JBX213-03	VSP04-213	-	-	MINI CONVERTOR SDI TO HDMI	-	-	V0142	1/V	-	VIDEO	4S	COVER W/GROMMET	WALL FLUSH	+60" AFF	GVS	PROVIDE ADJACENT AC POWER RECEPTACLE
		RCV01-213	CRESTRON	DM-RMC-SCALER-C	DIGITALMEDIA 8G+ RECEIVER & ROOM CONTROLLER W/SCALER	WALL SURFACE	AT DISPLAY	V0426	1/NS	CRESTRON DM-CBL-P	VIDEO					JBX213-01	
		LCD02-213	-	-	65" LED LCD DISPLAY (1920 X 1080) PROFESSIONAL 24/7 RATED	WALL SURFACE	+60" AFF	A0288, A0289	2/A	-	AUDIO						
E-11	JBX213-04	ICP05-213	CUSTOM	CUSTOM	(2) GANG: "F" CONNECTOR FOR THREADED ANTENNA MOUNT (XMTR)	CEILING SURFACE	ABOVE CEILING TILES	A0204	1/R	-	RF	4S	ICP05-213	CEILING SURFACE	ABOVE CEILING TILES	Rm 125	JBX, PANEL AND ANTENNA TO BE INSTALLED ABOVE CEILING TILES
E-11	JBX213-05	ICP06-213-01	CUSTOM	CUSTOM	(2) GANG, "F" CONNECTOR, THREADED ANTENNA MOUNT (RCVR)	CEILING SURFACE	ABOVE CEILING TILES	A0185	1/R	-	RF	4S	ICP06-213-01	CEILING SURFACE	ABOVE CEILING TILES	Rm 125	JBX, PANEL AND ANTENNA TO BE INSTALLED ABOVE CEILING TILES
E-11	JBX213-06	ICP06-213-02	CUSTOM	CUSTOM	(2) GANG, "F" CONNECTOR, THREADED ANTENNA MOUNT (RCVR)	CEILING SURFACE	ABOVE CEILING TILES	A0186	1/R	-	RF	4S	ICP06-213-02	CEILING SURFACE	ABOVE CEILING TILES	Rm 125	JBX, PANEL AND ANTENNA TO BE INSTALLED ABOVE CEILING TILES
E-11	SPK01-213-01	SPK01-213-01	-	-	6.5 INCH CEILING SPEAKER, (150 W @ 16 OHMS)	CEILING FLUSH	CEILING	S0104	1/S	-	SPEAKER	NA	NA	CEILING FLUSH	CEILING	Rm 125	-
E-11	SPK01-213-02	SPK01-213-02	-	-	6.5 INCH CEILING SPEAKER, (150 W @ 16 OHMS)	CEILING FLUSH	CEILING	S0104A	1/S	-	SPEAKER	NA	NA	CEILING FLUSH	CEILING	SPK01-213-01	-
E-11	SPK01-213-03	SPK01-213-03	-	-	6.5 INCH CEILING SPEAKER, (150 W @ 16 OHMS)	CEILING FLUSH	CEILING	S0104B	1/S	-	SPEAKER	NA	NA	CEILING FLUSH	CEILING	SPK01-213-02	-
E-11	SPK01-213-04	SPK01-213-04	-	-	6.5 INCH CEILING SPEAKER, (150 W @ 16 OHMS)	CEILING FLUSH	CEILING	S0104C	1/S	-	SPEAKER	NA	NA	CEILING FLUSH	CEILING	SPK01-213-03	-

ELECTRICAL DETAILS
(FILL SCHEDULE)

APPROVED FOR ELECTRICAL WORK ONLY

E-35

REVISED BY | DATE REVISED
JOSHUA MCNEILL | RANDY RATZLAFF
CALCULATED-DESIGNED BY | CHECKED BY
CONSULTANT FUNCTIONAL SUPERVISOR | STEVE HUFF
STATE OF CALIFORNIA - DEPARTMENT OF TRANSPORTATION
Caltrans

LAST REVISION 04-01-15 | DATE PLOTTED => 13-MAY-2015 | TIME PLOTTED => 08:49

Dist	COUNTY	LOCATION	POST MILES TOTAL PROJECT	SHEET No.	TOTAL SHEETS
12	Ora	Var		37	91

REGISTERED CIVIL ENGINEER 2-25-15 DATE

May 04, 2015
PLANS APPROVAL DATE

REGISTERED PROFESSIONAL ENGINEER CARLOS ORTIZ No. 57535 Exp. 12-31-15 CIVIL STATE OF CALIFORNIA

THE STATE OF CALIFORNIA OR ITS OFFICERS OR AGENTS SHALL NOT BE RESPONSIBLE FOR THE ACCURACY OR COMPLETENESS OF SCANNED COPIES OF THIS PLAN SHEET.

RBF CONSULTING
14725 ALTON PKWY
IRVINE, CA 92618

NOTES:

1. SEE SHEETS E-2, E-3 & E-4 FOR GENERAL NOTES, ABBREVIATIONS AND LEGEND.

AV BOX AND FILL SCHEDULE

SHEET	JBOX	ITEM	MANUFACTURER	MODEL	DEVICE DESCRIPTION	DEVICE MOUNTING	DEVICE ELEVATION	WIRE #	QTY/ TYPE	CABLE NAME	SIGNAL TYPE	BACK BOX SIZE	PANEL	JBOX MOUNTING	JBOX ELEVATION	CABLE SOURCE	NOTES
Rm 143 - CONFERENCE ROOM																	
Rm 143 - 1ST FLOOR CONFERENCE ROOM																	
E-8	FLB01-143	FLB01-143	-	-	FLOOR-MOUNTED RACEWAY - CARPET INLAY, W/AC US (20A MAX), PREWIRED CONDUIT	FLOOR SURFACE	FLOOR	V0399	1/NS	CRESTRON DM-CBL-P	CONTROL	NA	NA	FLOOR SURFACE	FLOOR	JBX143-01	FLOOR-MOUNTED RACEWAY INSTALLED UNDER CARPET
								N0305, N0307	2/N	-	NETWORK					FAC NET	
								V0407, V0408	2/NS	CRESTRON DM-CBL-P	VIDEO					JBX143-01	
E-8	JBX143-01	ICP60-143	CUSTOM	CUSTOM (RM. 143)	ALLOWANCE FOR INTERCONNECT PANEL 12"X12" (RM. 143 - TO FAC)	WALL FLUSH	+18" AFF	N0303	1/N	-	NETWORK	12X12	ICP60-143	WALL FLUSH	+18" AFF	FAC NET	ICP60-143 - RACK CONNECTION PANEL. PROVIDE ADJACENT AC POWER RECEPTACLE
								N0204	1/N	-	NETWORK					Rm 245	
								V0143	1/V	-	VIDEO					GVS	
								N0208	1/Z	CRESTRON CRESFIBER8G-P	NETWORK					Rm 245	
								N0131	1/Z	CRESTRON CRESFIBER8G-P	NETWORK					Rm 125	
								N0215, V0400	2/Z	CRESTRON CRESFIBER8G-P	VIDEO						
E-8	JBX143-03	RCV01-143	CRESTRON	DM-RMC-SCALER-C	DIGITALMEDIA 8G+ RECEIVER & ROOM CONTROLLER W/SCALER	WALL SURFACE	AT DISPLAY	V0398	1/NS	CRESTRON DM-CBL-P	VIDEO	4S	COVER W/GROMMET	WALL FLUSH	+60" AFF	JBX143-01	PROVIDE ADJACENT AC POWER RECEPTACLE
		LCD02-143	-	-	65" LED LCD DISPLAY (1920 X 1080) PROFESSIONAL 24/7 RATED	WALL SURFACE	+60" AFF	A0280, A0281	2/A	-	AUDIO						
E-8	JBX143-04	ICP05-143	CUSTOM	CUSTOM	(2) GANG: "F" CONNECTOR FOR THREADED ANTENNA MOUNT (XMTR)	CEILING SURFACE	ABOVE CEILING TILES	A0203	1/R	-	RF	4S	ICP05-143	CEILING SURFACE	ABOVE CEILING TILES	Rm 125	JBX, PANEL AND ANTENNA TO BE INSTALLED ABOVE CEILING TILES
E-8	JBX143-05	ICP06-143-01	CUSTOM	CUSTOM	(2) GANG, "F" CONNECTOR, THREADED ANTENNA MOUNT (RCVR)	CEILING SURFACE	ABOVE CEILING TILES	A0183	1/R	-	RF	4S	ICP06-143-01	CEILING SURFACE	ABOVE CEILING TILES	Rm 125	JBX, PANEL AND ANTENNA TO BE INSTALLED ABOVE CEILING TILES
E-8	JBX143-06	ICP06-143-02	CUSTOM	CUSTOM	(2) GANG, "F" CONNECTOR, THREADED ANTENNA MOUNT (RCVR)	CEILING SURFACE	ABOVE CEILING TILES	A0184	1/R	-	RF	4S	ICP06-143-02	CEILING SURFACE	ABOVE CEILING TILES	Rm 125	JBX, PANEL AND ANTENNA TO BE INSTALLED ABOVE CEILING TILES
E-8	SPK01-143-01	SPK01-143-01	-	-	6.5 INCH CEILING SPEAKER, (150 W @ 16 OHMS)	CEILING FLUSH	CEILING	S0105	1/S	-	SPEAKER	NA	NA	CEILING FLUSH	CEILING	Rm 125	-
E-8	SPK01-143-02	SPK01-143-02	-	-	6.5 INCH CEILING SPEAKER, (150 W @ 16 OHMS)	CEILING FLUSH	CEILING	S0105A	1/S	-	SPEAKER	NA	NA	CEILING FLUSH	CEILING	SPK01-143-01	-
E-8	SPK01-143-03	SPK01-143-03	-	-	6.5 INCH CEILING SPEAKER, (150 W @ 16 OHMS)	CEILING FLUSH	CEILING	S0105B	1/S	-	SPEAKER	NA	NA	CEILING FLUSH	CEILING	SPK01-143-02	-
E-8	SPK01-143-04	SPK01-143-04	-	-	6.5 INCH CEILING SPEAKER, (150 W @ 16 OHMS)	CEILING FLUSH	CEILING	S0105C	1/S	-	SPEAKER	NA	NA	CEILING FLUSH	CEILING	SPK01-143-03	-

ELECTRICAL DETAILS
(FILL SCHEDULE)

APPROVED FOR ELECTRICAL WORK ONLY

E-36

STATE OF CALIFORNIA - DEPARTMENT OF TRANSPORTATION
Caltrans

CONSULTANT FUNCTIONAL SUPERVISOR: STEVE HUFF
CALCULATED-DESIGNED BY: JOSHUA MCNEILL
CHECKED BY: RANDY RATZLAFF
REVISED BY
DATE REVISED

LAST REVISION 04-01-15
DATE PLOTTED => 13-MAY-2015
TIME PLOTTED => 08:49

Dist	COUNTY	LOCATION	POST MILES TOTAL PROJECT	SHEET No.	TOTAL SHEETS
12	Ora	Var		38	91

REGISTERED CIVIL ENGINEER 2-25-15 DATE

May 04, 2015
PLANS APPROVAL DATE

REGISTERED PROFESSIONAL ENGINEER CARLOS ORTIZ No. 57535 Exp. 12-31-15 CIVIL STATE OF CALIFORNIA

THE STATE OF CALIFORNIA OR ITS OFFICERS OR AGENTS SHALL NOT BE RESPONSIBLE FOR THE ACCURACY OR COMPLETENESS OF SCANNED COPIES OF THIS PLAN SHEET.

RBF CONSULTING
14725 ALTON PKWY
IRVINE, CA 92618

NOTES:

1. SEE SHEETS E-2, E-3 & E-4 FOR GENERAL NOTES, ABBREVIATIONS AND LEGEND.

AV BOX AND FILL SCHEDULE

SHEET	JBOX	ITEM	MANUFACTURER	MODEL	DEVICE DESCRIPTION	DEVICE MOUNTING	DEVICE ELEVATION	WIRE #	QTY/ TYPE	CABLE NAME	SIGNAL TYPE	BACK BOX SIZE	PANEL	JBOX MOUNTING	JBOX ELEVATION	CABLE SOURCE	NOTES
CON - CONTROL																	
Rm 123 - PROJECTION ROOM																	
E-7	AVR01-05	NET01-03	CISCO	SG500-52P-K9-NA	SG500-52MP: 52PORT LAYER 3 MANAGED ETHERNET SWITCH (POE)	IN RACK	IN RACK	N0172	1/Z	CRESTRON CRESFIBER8G-P	NETWORK	NA	NA	FLOOR SURFACE	FLOOR	Rm 125	AV EQUIPMENT RACK
E-7	AVR01-05	NET01-03	CISCO	SG500-52P-K9-NA	SG500-52MP: 52PORT LAYER 3 MANAGED ETHERNET SWITCH (POE)	IN RACK	IN RACK	N0327, N0328	2/N	-	NETWORK	NA	NA	FLOOR SURFACE	FLOOR	ATMS NET	AV EQUIPMENT RACK
Rm 125 - COMPUTER ROOM																	
E-6	AVR01-01	NET01-02	CISCO	SG500-52P-K9-NA	SG500-52MP: 52PORT LAYER 3 MANAGED ETHERNET SWITCH (POE)	IN RACK	IN RACK	N0178-N0181	4/N	-	NETWORK	NA	NA	FLOOR SURFACE	FLOOR	FAC NET	AV EQUIPMENT RACK
Rm 245 - 2ND FLOOR ELECTRICAL CLOSET																	
E-10	NET01-04	NET01-04	CISCO	SG500-52P-K9-NA	SG500-52MP: 52PORT LAYER 3 MANAGED ETHERNET SWITCH (POE)	IN RACK	IN RACK	N0193	1/Z	CRESTRON CRESFIBER8G-P	NETWORK	NA	NA	WALL SURFACE	+48" AFF	Rm 123	AV NETWORK SWITCH IN RM. 245
E-10	NET01-04	NET01-04	CISCO	SG500-52P-K9-NA	SG500-52MP: 52PORT LAYER 3 MANAGED ETHERNET SWITCH (POE)	IN RACK	IN RACK	N0129	1/Z	CRESTRON CRESFIBER8G-P	NETWORK	NA	NA	WALL SURFACE	+48" AFF	Rm 125	AV NETWORK SWITCH IN RM. 245
RCK - RACK & ACCESSORIES																	
Rm 125 - COMPUTER ROOM																	
E-6	AVR01-02	AVR01-02	-	-	44 SPACE-FULL RACK ASSEMBLY W/10" FAN TOP	FLOOR SURFACE	FLOOR	V0147-V0170	24/V	-	VIDEO	NA	NA	FLOOR SURFACE	FLOOR	GVS	AV EQUIPMENT RACK

REVISED BY | DATE REVISED
JOSHUA MCNEILL | RANDY RATZLAFF
CALCULATED-DESIGNED BY | CHECKED BY
CONSULTANT FUNCTIONAL SUPERVISOR | STEVE HUFF

STATE OF CALIFORNIA - DEPARTMENT OF TRANSPORTATION
Caltrans

ELECTRICAL DETAILS
(FILL SCHEDULE)

APPROVED FOR ELECTRICAL WORK ONLY

E-37

LAST REVISION 04-01-15 | DATE PLOTTED => 13-MAY-2015 TIME PLOTTED => 08:49

Dist	COUNTY	LOCATION	POST MILES TOTAL PROJECT	SHEET No.	TOTAL SHEETS
12	Ora	Var		39	91

REGISTERED CIVIL ENGINEER — DATE 2-25-15

May 04, 2015
PLANS APPROVAL DATE

REGISTERED PROFESSIONAL ENGINEER — CARLOS ORTIZ — No. 57535 — Exp. 12-31-15 — CIVIL — STATE OF CALIFORNIA

THE STATE OF CALIFORNIA OR ITS OFFICERS OR AGENTS SHALL NOT BE RESPONSIBLE FOR THE ACCURACY OR COMPLETENESS OF SCANNED COPIES OF THIS PLAN SHEET.

RBF CONSULTING
14725 ALTON PKWY
IRVINE, CA 92618

NOTES:

1. SEE SHEETS E-2, E-3 & E-4 FOR GENERAL NOTES, ABBREVIATIONS AND LEGEND.
2. NETWORK SWITCH INSTALLED IN Rm 245, IDF ON SECOND FLOOR.
3. SMALLER NETWORK SWITCH INSTALLED IN EACH LOCAL EQUIPMENT TO BE INSTALLED IN LOCATIONS SHOWN.
4. CAT6 CABLE MUST NOT EXCEED 300 FT. IN TOTAL LENGTH. PROJECT ELECTRICAL ENGINEER TO CONFIRM CABLE ROUTE THROUGH THE FACILITY.
5. ADDITIONAL CAT6 CABLE RUNS BETWEEN 1ST FLOOR ROOMS AND SECOND FLOOR ROOMS SHOWN FOR NETWORK PATH REDUNDANCY AND REQUIRES SPANNING TREE PROTOCOLS TO BE ENABLED.
6. CONFIGURATION NOTE: IN ADDITION TO WIRELESS CONTROL CAPABILITY PROVIDED IN THE LOBBY (Rm 102), THE TOUCH SCREEN LOCATED IN Rm 143 SHALL PROVIDE CONTROL FOR THE LOBBY DISPLAY.

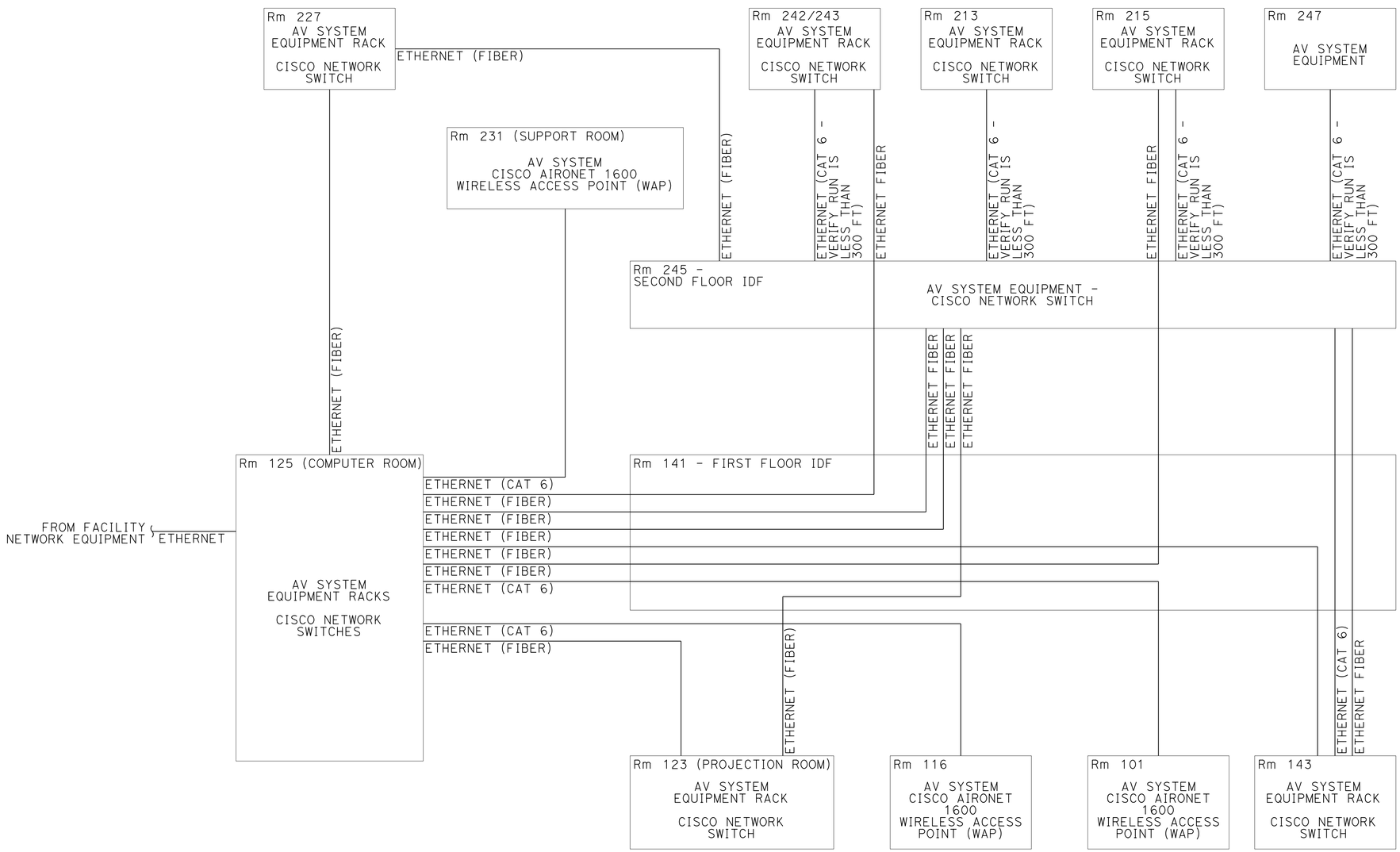

RISER DIAGRAM
AV NETWORK OVERVIEW

ELECTRICAL DETAILS
(LINE DIAGRAM)

APPROVED FOR ELECTRICAL WORK ONLY

E-38

STATE OF CALIFORNIA - DEPARTMENT OF TRANSPORTATION — Caltrans

CONSULTANT FUNCTIONAL SUPERVISOR: STEVE HUFF
CALCULATED-DESIGNED BY: JOSHUA MCNEILL
CHECKED BY: RANDY RATZLAFF
REVISED BY
DATE REVISED

LAST REVISION 04-01-15
DATE PLOTTED => 13-MAY-2015
TIME PLOTTED => 08:49

Dist	COUNTY	LOCATION	POST MILES TOTAL PROJECT	SHEET No.	TOTAL SHEETS
12	Ora	Var		40	91

REGISTERED CIVIL ENGINEER — DATE 2-25-15

May 04, 2015
PLANS APPROVAL DATE

REGISTERED PROFESSIONAL ENGINEER — CARLOS ORTIZ — No. 57535 — Exp. 12-31-15 — CIVIL — STATE OF CALIFORNIA

THE STATE OF CALIFORNIA OR ITS OFFICERS OR AGENTS SHALL NOT BE RESPONSIBLE FOR THE ACCURACY OR COMPLETENESS OF SCANNED COPIES OF THIS PLAN SHEET.

RBF CONSULTING
14725 ALTON PKWY
IRVINE, CA 92618

NOTES:

1. SEE SHEETS E-2, E-3 & E-4 FOR GENERAL NOTES, ABBREVIATIONS AND LEGEND.
2. THERE MUST BE FIBER OPTIC PATCH PANEL OR FIBER PASS-THROUGH Rm 245 IDF ON THE SECOND FLOOR. DIAGRAM SHOWS CONTINUOUS CABLE HOME RUNS AS THE PREFERRED METHOD OF INSTALLATION.
3. THERE MUST BE A LOCAL VIDEO SWITCHER INSTALLED IN THE LOCATIONS NOTED. FIBER OPTIC CABLE CONNECTIONS SHALL PROVIDE INPUT AND OUTPUT CONNECTIONS BETWEEN THE LOCAL VIDEO SWITCHER AND THE MAIN SWITCHER IN Rm 125.
4. Rm 247 SHALL REQUIRE ONE RUN OF FIBER CABLE FOR A TOUCH SCREEN TO BE LOCATED THERE. Rm 201 SHALL REQUIRE ONE RUN OF FIBER CABLE FOR A DISPLAY.

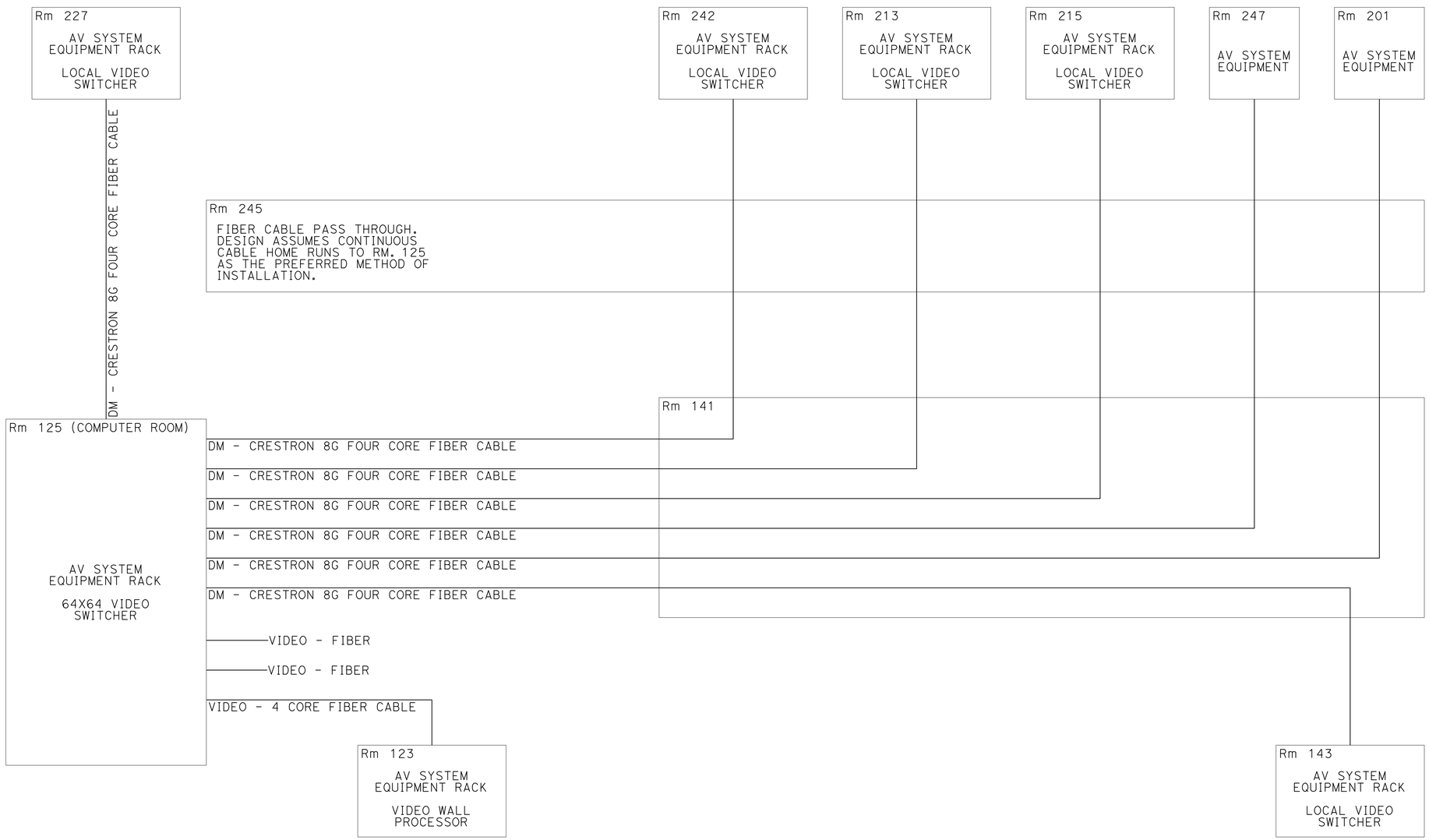

RISER DIAGRAM
AV DIGITAL VIDEO OVERVIEW

ELECTRICAL DETAILS
(LINE DIAGRAM)

APPROVED FOR ELECTRICAL WORK ONLY

E-39

STATE OF CALIFORNIA - DEPARTMENT OF TRANSPORTATION
Caltrans

CONSULTANT FUNCTIONAL SUPERVISOR: STEVE HUFF
CALCULATED-DESIGNED BY: JOSHUA MCNEILL
CHECKED BY: RANDY RATZLAFF
REVISED BY
DATE REVISED

LAST REVISION 04-01-15 | DATE PLOTTED => 13-MAY-2015 | TIME PLOTTED => 08:49

Dist	COUNTY	LOCATION	POST MILES TOTAL PROJECT	SHEET No.	TOTAL SHEETS
12	Ora	Var		41	91

REGISTERED CIVIL ENGINEER — DATE 2-25-15

May 04, 2015
PLANS APPROVAL DATE

REGISTERED PROFESSIONAL ENGINEER — CARLOS ORTIZ — No. 57535 — Exp. 12-31-15 — CIVIL — STATE OF CALIFORNIA

THE STATE OF CALIFORNIA OR ITS OFFICERS OR AGENTS SHALL NOT BE RESPONSIBLE FOR THE ACCURACY OR COMPLETENESS OF SCANNED COPIES OF THIS PLAN SHEET.

RBF CONSULTING
14725 ALTON PKWY
IRVINE, CA 92618

NOTES:

1. SEE SHEETS E-2, E-3 & E-4 FOR GENERAL NOTES, ABBREVIATIONS AND LEGEND.

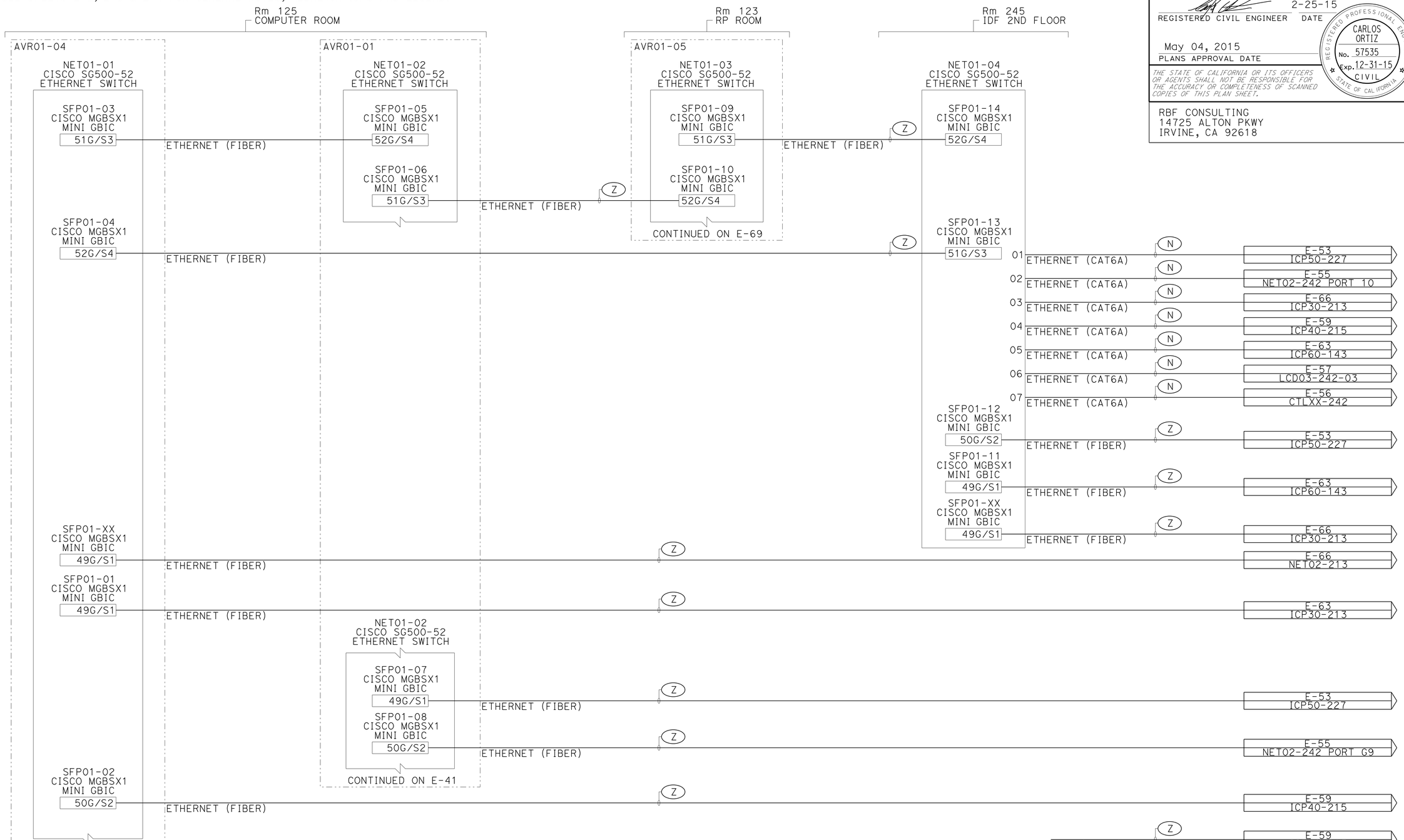

BLOCK DIAGRAM
AV NETWORK

ELECTRICAL DETAILS
(LINE DIAGRAM)

APPROVED FOR ELECTRICAL WORK ONLY

E-40

STATE OF CALIFORNIA - DEPARTMENT OF TRANSPORTATION
Caltrans®

CONSULTANT FUNCTIONAL SUPERVISOR: STEVE HUFF
CALCULATED-DESIGNED BY: JOSHUA MCNEILL
CHECKED BY: RANDY RATZLAFF
REVISED BY
DATE REVISED

LAST REVISION 04-01-15
DATE PLOTTED => 13-MAY-2015
TIME PLOTTED => 08:49

Dist	COUNTY	LOCATION	POST MILES TOTAL PROJECT	SHEET No.	TOTAL SHEETS
12	Ora	Var		42	91

REGISTERED CIVIL ENGINEER — DATE 2-25-15

May 04, 2015
PLANS APPROVAL DATE

REGISTERED PROFESSIONAL ENGINEER — CARLOS ORTIZ — No. 57535 — Exp. 12-31-15 — CIVIL — STATE OF CALIFORNIA

THE STATE OF CALIFORNIA OR ITS OFFICERS OR AGENTS SHALL NOT BE RESPONSIBLE FOR THE ACCURACY OR COMPLETENESS OF SCANNED COPIES OF THIS PLAN SHEET.

RBF CONSULTING
14725 ALTON PKWY
IRVINE, CA 92618

NOTES:

1. SEE SHEETS E-2, E-3 & E-4 FOR GENERAL NOTES, ABBREVIATIONS AND LEGEND.

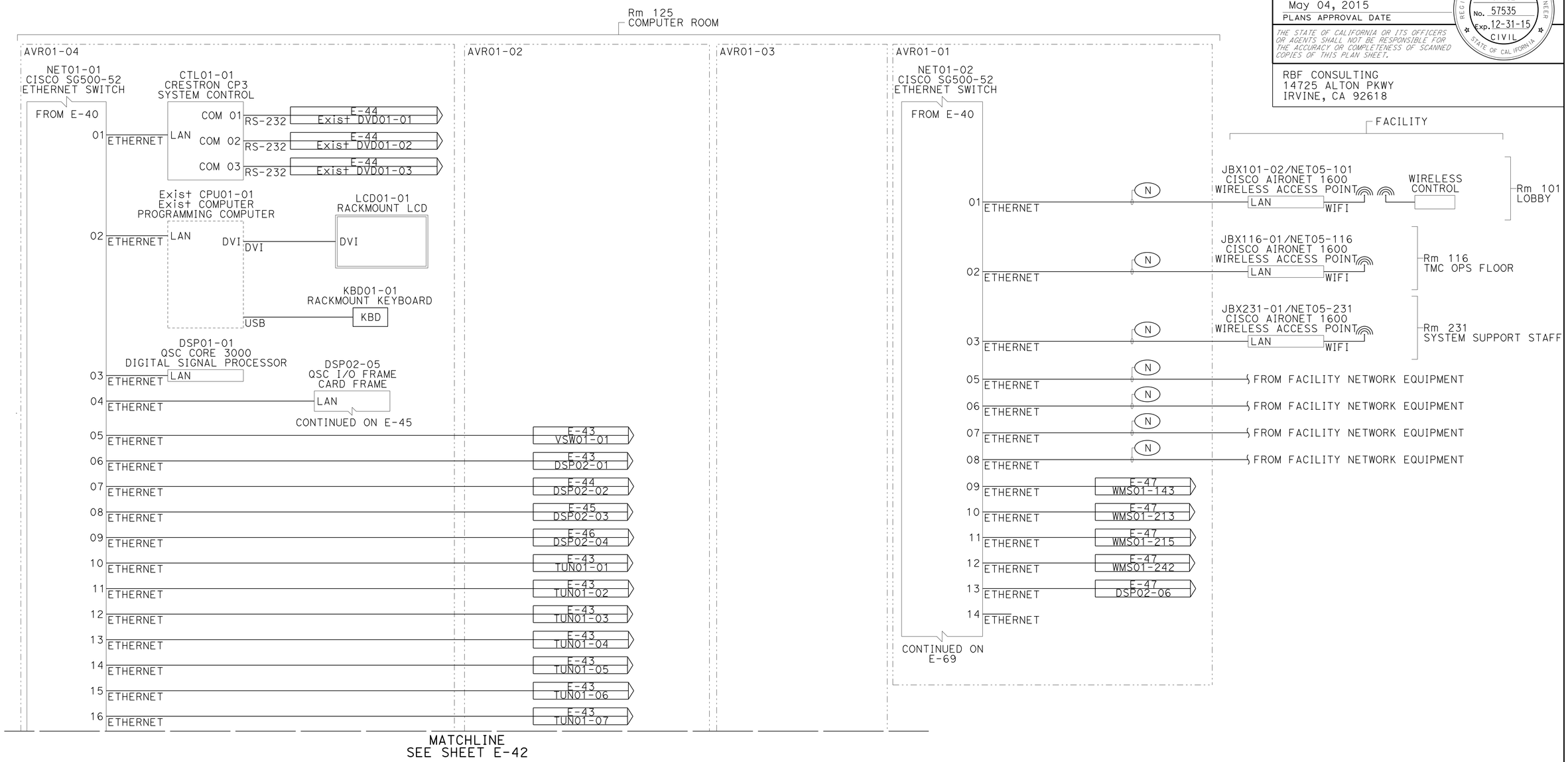

BLOCK DIAGRAM
AV NETWORK

ELECTRICAL DETAILS
(LINE DIAGRAM)

APPROVED FOR ELECTRICAL WORK ONLY

E-41

STATE OF CALIFORNIA - DEPARTMENT OF TRANSPORTATION
Caltrans
CONSULTANT FUNCTIONAL SUPERVISOR: STEVE HUFF
CALCULATED-DESIGNED BY: JOSHUA MCNEILL
CHECKED BY: RANDY RATZLAFF
REVISED BY
DATE REVISED

LAST REVISION 04-01-15
DATE PLOTTED => 13-MAY-2015
TIME PLOTTED => 08:49

Dist	COUNTY	LOCATION	POST MILES TOTAL PROJECT	SHEET No.	TOTAL SHEETS
12	Ora	Var		43	91

REGISTERED CIVIL ENGINEER 2-25-15 DATE

May 04, 2015
PLANS APPROVAL DATE

REGISTERED PROFESSIONAL ENGINEER CARLOS ORTIZ No. 57535 Exp. 12-31-15 CIVIL STATE OF CALIFORNIA

THE STATE OF CALIFORNIA OR ITS OFFICERS OR AGENTS SHALL NOT BE RESPONSIBLE FOR THE ACCURACY OR COMPLETENESS OF SCANNED COPIES OF THIS PLAN SHEET.

RBF CONSULTING
14725 ALTON PKWY
IRVINE, CA 92618

NOTES:

1. SEE SHEETS E-2, E-3 & E-4 FOR GENERAL NOTES, ABBREVIATIONS AND LEGEND.

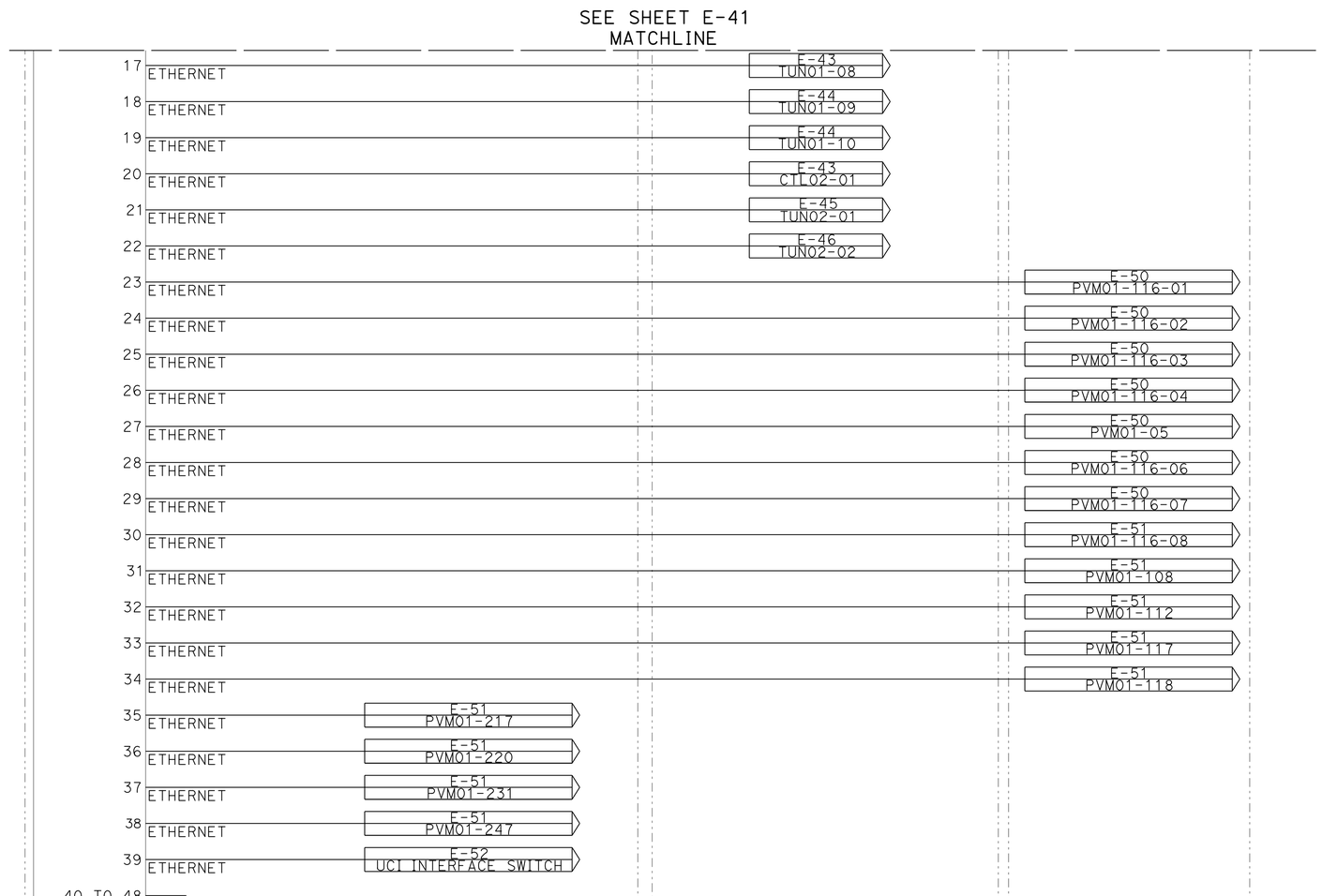

BLOCK DIAGRAM
AV NETWORK

ELECTRICAL DETAILS
(LINE DIAGRAM)

APPROVED FOR ELECTRICAL WORK ONLY

E-42

REVISED BY	DATE REVISED
JOSHUA MCNEILL	RANDY RATZLAFF

CALCULATED-DESIGNED BY / CHECKED BY

CONSULTANT FUNCTIONAL SUPERVISOR: STEVE HUFF

STATE OF CALIFORNIA - DEPARTMENT OF TRANSPORTATION
Caltrans

LAST REVISION 04-01-15 | DATE PLOTTED => 13-MAY-2015 | TIME PLOTTED => 08:49

Dist	COUNTY	LOCATION	POST MILES TOTAL PROJECT	SHEET No.	TOTAL SHEETS
12	Ora	Var		44	91

REGISTERED CIVIL ENGINEER — DATE 2-25-15

May 04, 2015
PLANS APPROVAL DATE

REGISTERED PROFESSIONAL ENGINEER — CARLOS ORTIZ — No. 57535 — Exp. 12-31-15 — CIVIL — STATE OF CALIFORNIA

THE STATE OF CALIFORNIA OR ITS OFFICERS OR AGENTS SHALL NOT BE RESPONSIBLE FOR THE ACCURACY OR COMPLETENESS OF SCANNED COPIES OF THIS PLAN SHEET.

RBF CONSULTING
14725 ALTON PKWY
IRVINE, CA 92618

NOTES:

1. SEE SHEETS E-2, E-3 & E-4 FOR GENERAL NOTES, ABBREVIATIONS AND LEGEND.

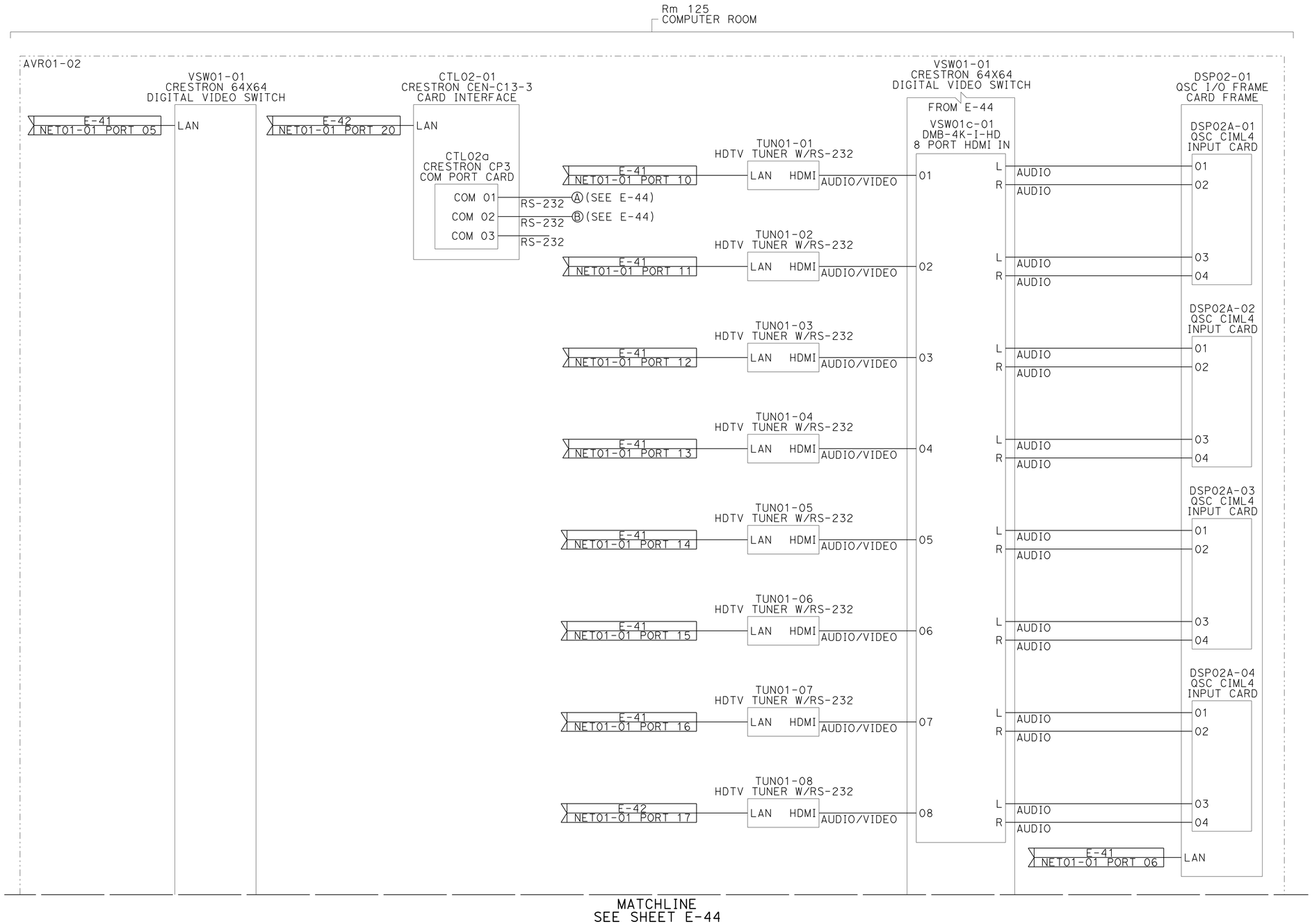

BLOCK DIAGRAM
Rm 125 AUDIO VIDEO SOURCE DEVICES TO DSP

ELECTRICAL DETAILS
(LINE DIAGRAM)

APPROVED FOR ELECTRICAL WORK ONLY

E-43

STATE OF CALIFORNIA - DEPARTMENT OF TRANSPORTATION
Caltrans

CONSULTANT FUNCTIONAL SUPERVISOR: STEVE HUFF
CALCULATED-DESIGNED BY: JOSHUA MCNEILL
CHECKED BY: RANDY RATZLAFF
REVISED BY
DATE REVISED

LAST REVISION 04-01-15
DATE PLOTTED => 13-MAY-2015
TIME PLOTTED => 08:49

Dist	COUNTY	LOCATION	POST MILES TOTAL PROJECT	SHEET No.	TOTAL SHEETS
12	Ora	Var		45	91

REGISTERED CIVIL ENGINEER 2-25-15 DATE

May 04, 2015
PLANS APPROVAL DATE

REGISTERED PROFESSIONAL ENGINEER CARLOS ORTIZ No. 57535 Exp. 12-31-15 CIVIL STATE OF CALIFORNIA

THE STATE OF CALIFORNIA OR ITS OFFICERS OR AGENTS SHALL NOT BE RESPONSIBLE FOR THE ACCURACY OR COMPLETENESS OF SCANNED COPIES OF THIS PLAN SHEET.

RBF CONSULTING
14725 ALTON PKWY
IRVINE, CA 92618

NOTES:

1. SEE SHEETS E-2, E-3 & E-4 FOR GENERAL NOTES, ABBREVIATIONS AND LEGEND.

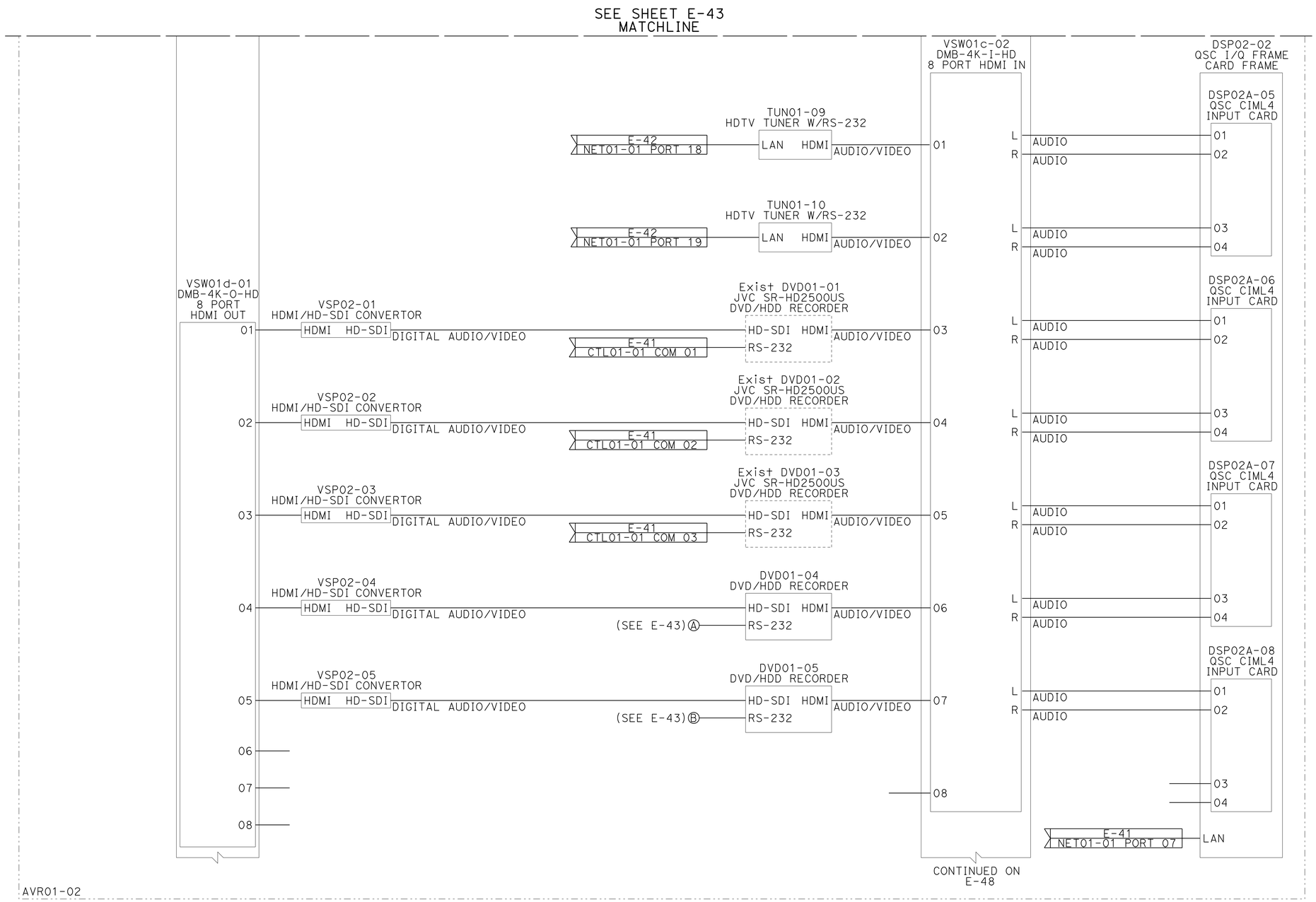

BLOCK DIAGRAM
Rm 125 AUDIO VIDEO SOURCE DEVICES TO DSP

ELECTRICAL DETAILS
(LINE DIAGRAM)

APPROVED FOR ELECTRICAL WORK ONLY

E-44

STATE OF CALIFORNIA - DEPARTMENT OF TRANSPORTATION
Caltrans

CONSULTANT FUNCTIONAL SUPERVISOR: STEVE HUFF
CALCULATED-DESIGNED BY: JOSHUA MCNEILL
CHECKED BY: RANDY RATZLAFF
REVISED BY
DATE REVISED

LAST REVISION 04-01-15
DATE PLOTTED => 13-MAY-2015
TIME PLOTTED => 08:49

Dist	COUNTY	LOCATION	POST MILES TOTAL PROJECT	SHEET No.	TOTAL SHEETS
12	Ora	Var		46	91

REGISTERED CIVIL ENGINEER — DATE 2-25-15

May 04, 2015
PLANS APPROVAL DATE

REGISTERED PROFESSIONAL ENGINEER — CARLOS ORTIZ — No. 57535 — Exp. 12-31-15 — CIVIL — STATE OF CALIFORNIA

THE STATE OF CALIFORNIA OR ITS OFFICERS OR AGENTS SHALL NOT BE RESPONSIBLE FOR THE ACCURACY OR COMPLETENESS OF SCANNED COPIES OF THIS PLAN SHEET.

RBF CONSULTING
14725 ALTON PKWY
IRVINE, CA 92618

NOTES:

1. SEE SHEETS E-2, E-3 & E-4 FOR GENERAL NOTES, ABBREVIATIONS AND LEGEND.
2. ALL SOURCE SIGNALS MUST CONNECT TO DIGITAL SIGNAL PROCESSOR INPUT FRAME, TRANSFER TO CORE PROCESSOR VIA ETHERNET THEN TRANSFER TO DSP OUTPUT FRAME AND ONTO RESPECTIVE AMPLIFIER AND SPEAKERS.
3. ALL PHYSICAL MATRIX MIXERS AND OTHER PROCESSORS ARE ELIMINATED AND RECREATED INSIDE THE DSP CORE UNIT.

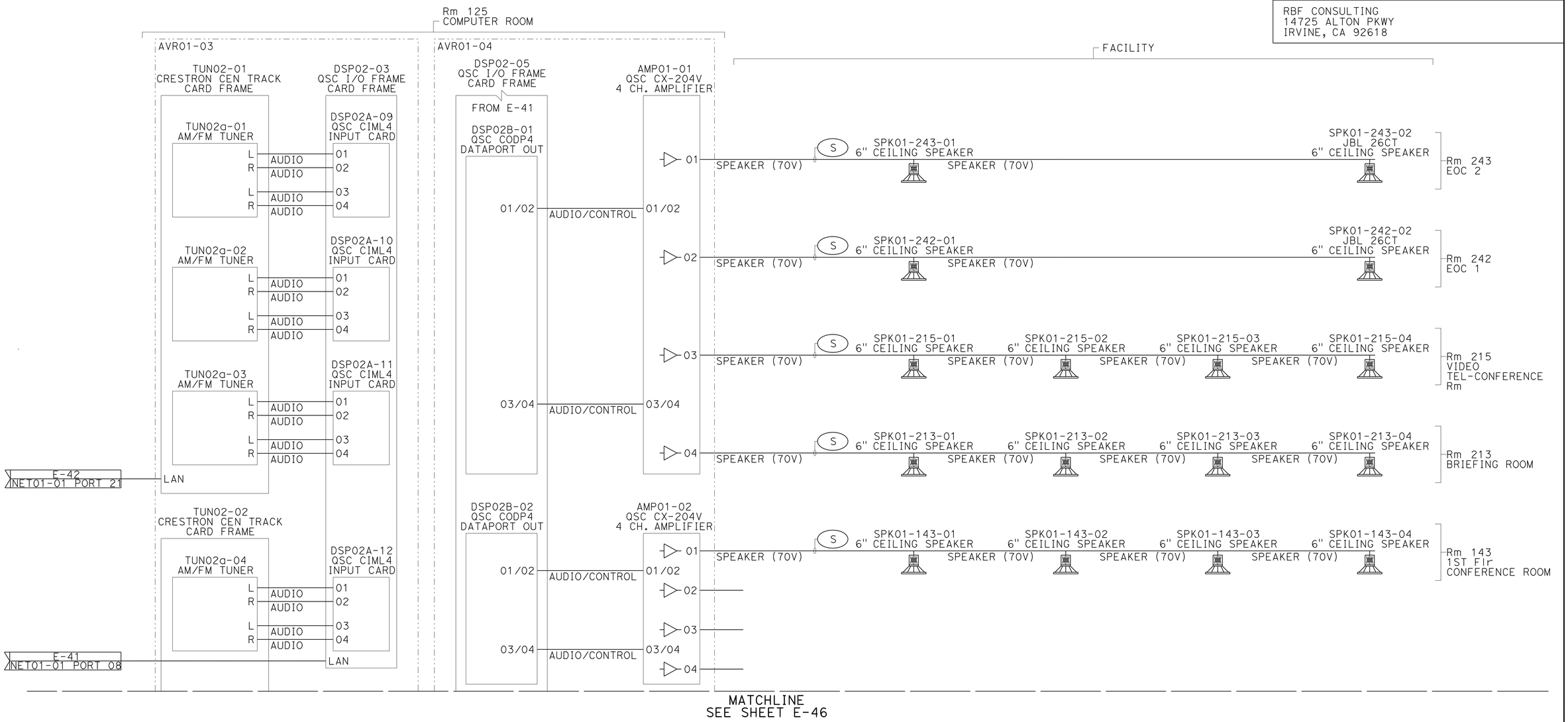

BLOCK DIAGRAM
NETWORK AUDIO SYSTEM
Rm 125 AUDIO VIDEO SOURCE DEVICES TO DSP
TMC OPS FLOOR AND CONFERENCE ROOM AUDIO REINFORCEMENT

ELECTRICAL DETAILS
(LINE DIAGRAM)

APPROVED FOR ELECTRICAL WORK ONLY

E-45

REVISED BY	DATE REVISED
JOSHUA MCNEILL	RANDY RATZLAFF

CALCULATED-DESIGNED BY — CHECKED BY
CONSULTANT FUNCTIONAL SUPERVISOR — STEVE HUFF

STATE OF CALIFORNIA - DEPARTMENT OF TRANSPORTATION
Caltrans

LAST REVISION 04-01-15 — DATE PLOTTED => 13-MAY-2015 — TIME PLOTTED => 08:49

Dist	COUNTY	LOCATION	POST MILES TOTAL PROJECT	SHEET No.	TOTAL SHEETS
12	Ora	Var		47	91

REGISTERED CIVIL ENGINEER — DATE 2-25-15

May 04, 2015
PLANS APPROVAL DATE

REGISTERED PROFESSIONAL ENGINEER — CARLOS ORTIZ — No. 57535 — Exp. 12-31-15 — CIVIL — STATE OF CALIFORNIA

THE STATE OF CALIFORNIA OR ITS OFFICERS OR AGENTS SHALL NOT BE RESPONSIBLE FOR THE ACCURACY OR COMPLETENESS OF SCANNED COPIES OF THIS PLAN SHEET.

RBF CONSULTING
14725 ALTON PKWY
IRVINE, CA 92618

NOTES:

1. SEE SHEETS E-2, E-3 & E-4 FOR GENERAL NOTES, ABBREVIATIONS AND LEGEND.
2. ALL SOURCE SIGNALS MUST CONNECT TO DIGITAL SIGNAL PROCESSOR INPUT FRAME, TRANSFER TO CORE PROCESSOR VIA ETHERNET THEN TRANSFER TO DSP OUTPUT FRAME AND ONTO RESPECTIVE AMPLIFIER AND SPEAKERS.
3. ALL PHYSICAL MATRIX MIXERS AND OTHER PROCESSORS ARE ELIMINATED AND RECREATED INSIDE THE DSP CORE UNIT.

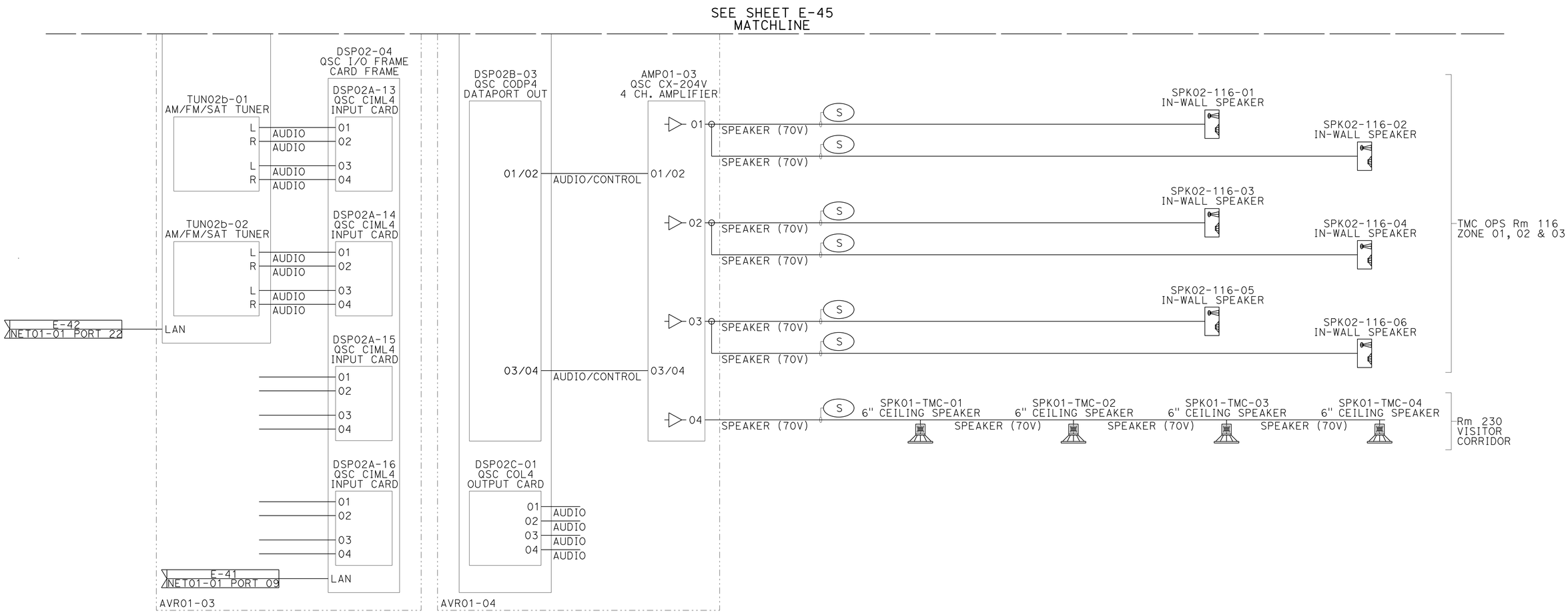

BLOCK DIAGRAM
NETWORK AUDIO SYSTEM
Rm 125 AUDIO VIDEO SOURCE DEVICES TO DSP
TMC OPS FLOOR AND CONFERENCE ROOM AUDIO REINFORCEMENT

ELECTRICAL DETAILS
(LINE DIAGRAM)

APPROVED FOR ELECTRICAL WORK ONLY

E-46

STATE OF CALIFORNIA - DEPARTMENT OF TRANSPORTATION — Caltrans

CONSULTANT FUNCTIONAL SUPERVISOR: STEVE HUFF
CALCULATED-DESIGNED BY: JOSHUA MCNEILL — CHECKED BY: RANDY RATZLAFF
REVISED BY — DATE REVISED

LAST REVISION 04-01-15 — DATE PLOTTED => 13-MAY-2015 — TIME PLOTTED => 08:49

Dist	COUNTY	LOCATION	POST MILES TOTAL PROJECT	SHEET No.	TOTAL SHEETS
12	Ora	Var		48	91

REGISTERED CIVIL ENGINEER — DATE 2-25-15

May 04, 2015
PLANS APPROVAL DATE

REGISTERED PROFESSIONAL ENGINEER — CARLOS ORTIZ — No. 57535 — Exp. 12-31-15 — CIVIL — STATE OF CALIFORNIA

THE STATE OF CALIFORNIA OR ITS OFFICERS OR AGENTS SHALL NOT BE RESPONSIBLE FOR THE ACCURACY OR COMPLETENESS OF SCANNED COPIES OF THIS PLAN SHEET.

RBF CONSULTING
14725 ALTON PKWY
IRVINE, CA 92618

NOTES:

1. SEE SHEETS E-2, E-3 & E-4 FOR GENERAL NOTES, ABBREVIATIONS AND LEGEND.
2. WIRELESS MICROPHONE ANTENNAE AND THE WIRELESS TRANSMITTER ANTENNAE TO BE INSTALLED ABOVE CEILING TILES.

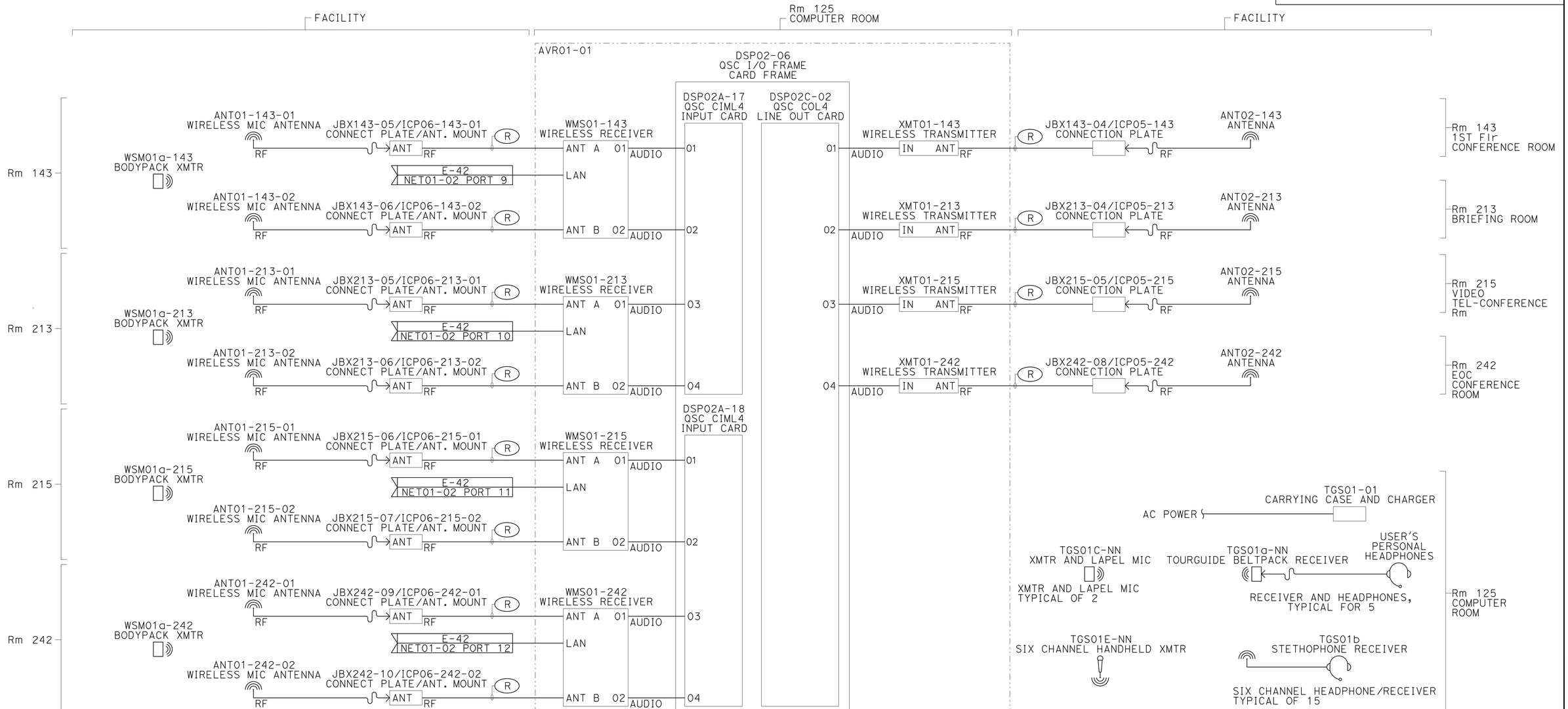

BLOCK DIAGRAM
CONFERENCE ROOM VOICE ASSIST AND FACILITY TOURGUIDE SYSTEM

ELECTRICAL DETAILS
(LINE DIAGRAM)

APPROVED FOR ELECTRICAL WORK ONLY

E-47

REVISED BY	DATE REVISED
JOSHUA MCNEILL	RANDY RATZLAFF

CALCULATED-DESIGNED BY — CHECKED BY

CONSULTANT FUNCTIONAL SUPERVISOR — STEVE HUFF

STATE OF CALIFORNIA - DEPARTMENT OF TRANSPORTATION — Caltrans

LAST REVISION 04-01-15 — DATE PLOTTED => 13-MAY-2015 — TIME PLOTTED => 08:49

Dist	COUNTY	LOCATION	POST MILES TOTAL PROJECT	SHEET No.	TOTAL SHEETS
12	Ora	Var		49	91

REGISTERED CIVIL ENGINEER — DATE 2-25-15

May 04, 2015
PLANS APPROVAL DATE

REGISTERED PROFESSIONAL ENGINEER — CARLOS ORTIZ — No. 57535 — Exp. 12-31-15 — CIVIL — STATE OF CALIFORNIA

THE STATE OF CALIFORNIA OR ITS OFFICERS OR AGENTS SHALL NOT BE RESPONSIBLE FOR THE ACCURACY OR COMPLETENESS OF SCANNED COPIES OF THIS PLAN SHEET.

RBF CONSULTING
14725 ALTON PKWY
IRVINE, CA 92618

NOTES:

1. SEE SHEETS E-2, E-3 & E-4 FOR GENERAL NOTES, ABBREVIATIONS AND LEGEND.

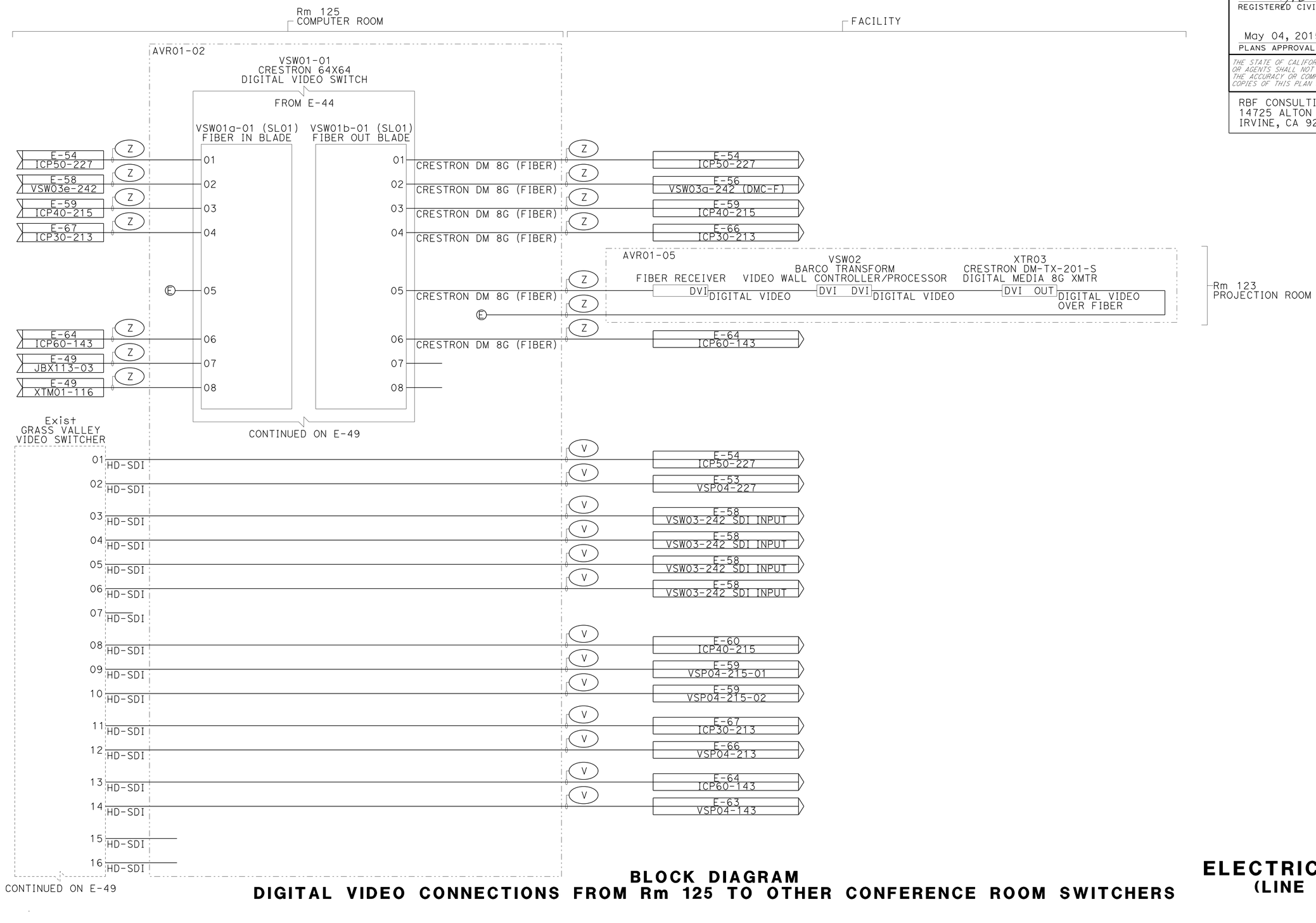

BLOCK DIAGRAM
DIGITAL VIDEO CONNECTIONS FROM Rm 125 TO OTHER CONFERENCE ROOM SWITCHERS

ELECTRICAL DETAILS
(LINE DIAGRAM)

APPROVED FOR ELECTRICAL WORK ONLY

E-48

REVISED BY	DATE REVISED
JOSHUA MCNEILL	RANDY RATZLAFF
CALCULATED-DESIGNED BY	CHECKED BY
CONSULTANT FUNCTIONAL SUPERVISOR	STEVE HUFF

STATE OF CALIFORNIA - DEPARTMENT OF TRANSPORTATION — Caltrans

LAST REVISION 04-01-15 | DATE PLOTTED => 13-MAY-2015 | TIME PLOTTED => 08:49

Dist	COUNTY	LOCATION	POST MILES TOTAL PROJECT	SHEET No.	TOTAL SHEETS
12	Ora	Var		50	91

REGISTERED CIVIL ENGINEER — DATE 2-25-15

May 04, 2015
PLANS APPROVAL DATE

REGISTERED PROFESSIONAL ENGINEER — CARLOS ORTIZ — No. 57535 — Exp. 12-31-15 — CIVIL — STATE OF CALIFORNIA

THE STATE OF CALIFORNIA OR ITS OFFICERS OR AGENTS SHALL NOT BE RESPONSIBLE FOR THE ACCURACY OR COMPLETENESS OF SCANNED COPIES OF THIS PLAN SHEET.

RBF CONSULTING
14725 ALTON PKWY
IRVINE, CA 92618

NOTES:

1. SEE SHEETS E-2, E-3 & E-4 FOR GENERAL NOTES, ABBREVIATIONS AND LEGEND.

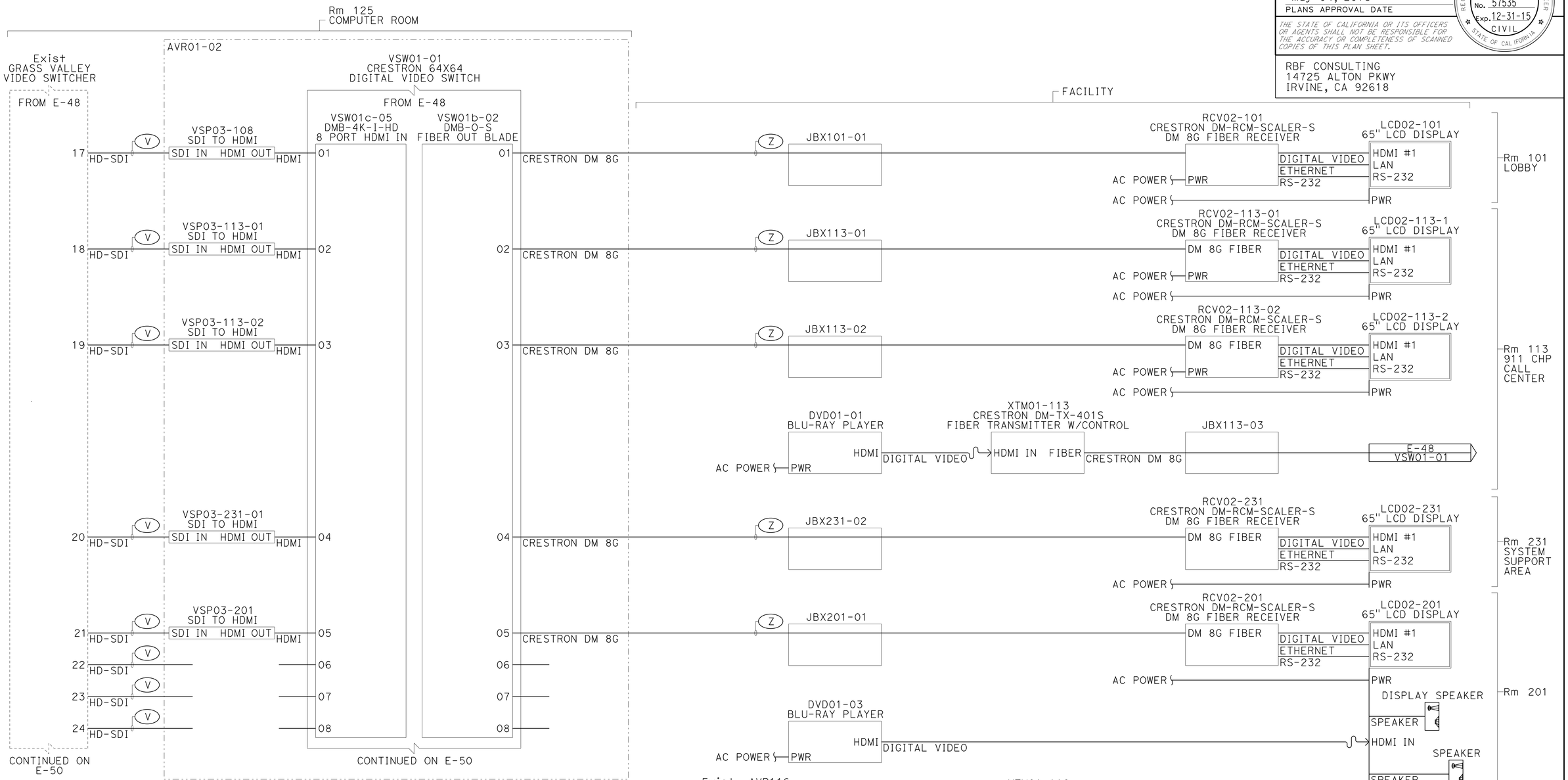

BLOCK DIAGRAM
LOCAL VIDEO DISPLAYS

ELECTRICAL DETAILS
(LINE DIAGRAM)

APPROVED FOR ELECTRICAL WORK ONLY

E-49

STATE OF CALIFORNIA - DEPARTMENT OF TRANSPORTATION — Caltrans

CONSULTANT FUNCTIONAL SUPERVISOR: STEVE HUFF
CALCULATED-DESIGNED BY: JOSHUA MCNEILL
CHECKED BY: RANDY RATZLAFF
REVISED BY / DATE REVISED

LAST REVISION 04-01-15 | DATE PLOTTED => 13-MAY-2015 | TIME PLOTTED => 08:49

Dist	COUNTY	LOCATION	POST MILES TOTAL PROJECT	SHEET No.	TOTAL SHEETS
12	Ora	Var		51	91

REGISTERED CIVIL ENGINEER — DATE 2-25-15

May 04, 2015
PLANS APPROVAL DATE

REGISTERED PROFESSIONAL ENGINEER — CARLOS ORTIZ — No. 57535 — Exp. 12-31-15 — CIVIL — STATE OF CALIFORNIA

THE STATE OF CALIFORNIA OR ITS OFFICERS OR AGENTS SHALL NOT BE RESPONSIBLE FOR THE ACCURACY OR COMPLETENESS OF SCANNED COPIES OF THIS PLAN SHEET.

RBF CONSULTING
14725 ALTON PKWY
IRVINE, CA 92618

NOTES:

1. SEE SHEETS E-2, E-3 & E-4 FOR GENERAL NOTES, ABBREVIATIONS AND LEGEND.
2. TOUCH SCREENS TO BE POWERED OVER CRESTRON DM CABLE. AC RECEPTACLE TO BE PROVIDED SHOULD CABLE DISTANCE PROVE TO BE TOO GREAT TO ADEQUATELY POWER THE V15 AND A LOCAL POWER SUPPLY IS NEEDED.

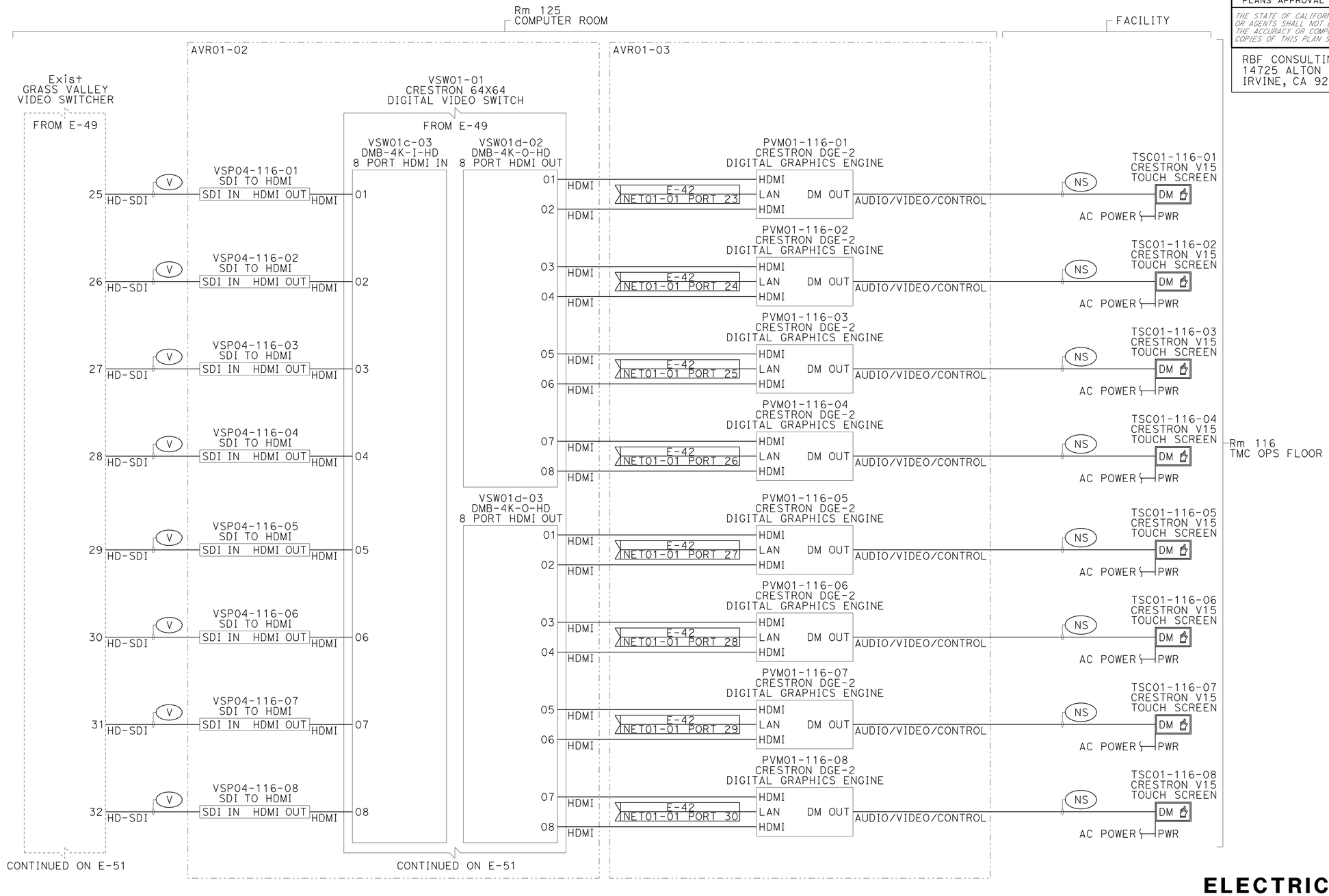

BLOCK DIAGRAM
Rm 116 CONTROL SCREENS

ELECTRICAL DETAILS
(LINE DIAGRAM)

APPROVED FOR ELECTRICAL WORK ONLY

E-50

STATE OF CALIFORNIA - DEPARTMENT OF TRANSPORTATION
Caltrans

CONSULTANT FUNCTIONAL SUPERVISOR: STEVE HUFF
CALCULATED-DESIGNED BY: JOSHUA MCNEILL
CHECKED BY: RANDY RATZLAFF
REVISED BY
DATE REVISED

LAST REVISION 04-01-15
DATE PLOTTED => 13-MAY-2015
TIME PLOTTED => 08:49

Dist	COUNTY	LOCATION	POST MILES TOTAL PROJECT	SHEET No.	TOTAL SHEETS
12	Ora	Var		52	91

REGISTERED CIVIL ENGINEER — DATE 2-25-15

May 04, 2015
PLANS APPROVAL DATE

REGISTERED PROFESSIONAL ENGINEER — CARLOS ORTIZ — No. 57535 — Exp. 12-31-15 — CIVIL — STATE OF CALIFORNIA

THE STATE OF CALIFORNIA OR ITS OFFICERS OR AGENTS SHALL NOT BE RESPONSIBLE FOR THE ACCURACY OR COMPLETENESS OF SCANNED COPIES OF THIS PLAN SHEET.

RBF CONSULTING
14725 ALTON PKWY
IRVINE, CA 92618

NOTES:

1. SEE SHEETS E-2, E-3 & E-4 FOR GENERAL NOTES, ABBREVIATIONS AND LEGEND.
2. TOUCH SCREENS TO BE POWERED OVER CRESTRON DM CABLE. AC RECEPTACLE TO BE PROVIDED SHOULD CABLE DISTANCE PROVE TO BE TOO GREAT TO ADEQUATELY POWER THE V15 AND A LOCAL POWER SUPPLY IS NEEDED.

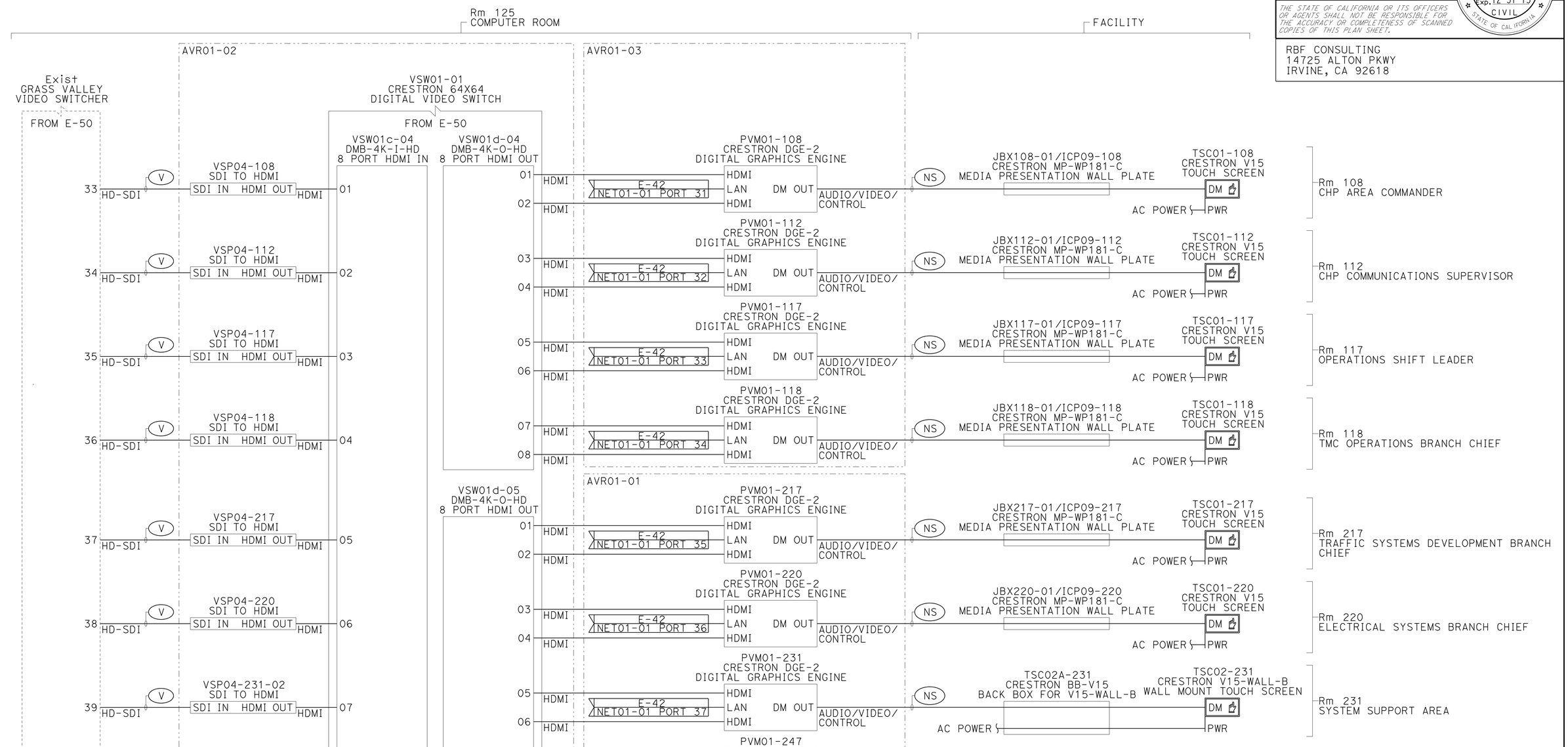

CONTINUED ON E-52

BLOCK DIAGRAM
LOCAL CONTROL SCREENS

APPROVED FOR ELECTRICAL WORK ONLY

ELECTRICAL DETAILS
(LINE DIAGRAM)

E-51

STATE OF CALIFORNIA - DEPARTMENT OF TRANSPORTATION
Caltrans

CONSULTANT FUNCTIONAL SUPERVISOR: STEVE HUFF
CALCULATED-DESIGNED BY: JOSHUA MCNEILL
CHECKED BY: RANDY RATZLAFF
REVISED BY
DATE REVISED

LAST REVISION 04-01-15
DATE PLOTTED => 13-MAY-2015
TIME PLOTTED => 08:49

Dist	COUNTY	LOCATION	POST MILES TOTAL PROJECT	SHEET No.	TOTAL SHEETS
12	Ora	Var		53	91

REGISTERED CIVIL ENGINEER — DATE 2-25-15

PLANS APPROVAL DATE May 04, 2015

REGISTERED PROFESSIONAL ENGINEER CARLOS ORTIZ No. 57535 Exp. 12-31-15 CIVIL STATE OF CALIFORNIA

THE STATE OF CALIFORNIA OR ITS OFFICERS OR AGENTS SHALL NOT BE RESPONSIBLE FOR THE ACCURACY OR COMPLETENESS OF SCANNED COPIES OF THIS PLAN SHEET.

RBF CONSULTING
14725 ALTON PKWY
IRVINE, CA 92618

NOTES:

1. SEE SHEETS E-2, E-3 & E-4 FOR GENERAL NOTES, ABBREVIATIONS AND LEGEND.
2. THE BLOCK DIAGRAM BELOW REPRESENTS THE BASIC CONFIGURATION OF HARDWARE CURRENTLY USED TO SEND VIDEO SIGNALS FROM CALTRANS TO UCI.
3. TWO ANALOG VIDEO OUTPUTS FROM THE GRASS VALLEY SWITCHER ARE CONNECTED TO VBRICK VIDEO-TO-ETHERNET CODECS. THE CODES AREA CONNECTED TO A CALTRANS FACILITY NETWORK SWITCH. FIBER OUTPUTS FROM THIS SWITCH ARE CONNECTED TO CABLE THAT TERMINATES IN THE ANTEATER INSTRUCTION AND RESEARCH BUILDING, SERVER ROOM FOR THE INSTITUTE OF TRANSPORTATION STUDIES.
4. AT UCI, A DUAL CHANNEL VBRICK DECODER CONNECTED TO THEIR NETWORK SWITCH OUTPUTS ANALOG VIDEO AND IS CONNECTED TO THEIR EXTRON SWITCHER FOR INTEGRATION INTO THEIR SYSTEM.
5. ONE CRESTRON TPS-5000 TOUCH SCREEN LOCATED IN THE CONTROL ROOM IS CONNECTED TO THE SWITCH IN THE SERVER ROOM. THE CLOSED NETWORK CONNECTION PACK TO CALTRANS D12 ALLOWS THIS TOUCH PANEL TO MAKE CAMERA SELECTIONS AND CHANGE FEEDS FROM THE GRASS VALLEY SWITCHER AS NEEDED.
6. RESEARCH IS ONGOING THAT WILL PROVIDE OPTIONS SHOULD THE GRASS VALLEY SWITCHER BE UPGRADED TO HIGH DEFINITION, DIGITAL VIDEO SIGNAL FORMATS AND PROVIDE HIGHER DEFINITION SIGNALS TO THE UCI CAMPUS SHOULD THEY DECIDE TO UPGRADE THEIR SYSTEM.
7. THE NEW DESIGN CALLS FOR THE UCI TOUCH PANEL TO BE UPGRADED TO A CRESTRON V-15 CONNECTED TO A CRESTRON DGE2 DIGITAL GRAPHICS ENGINE INSTALLED IN THE SERVER ROOM. THE OPTION EXISTS TO ADD VIDEO SIGNALS TO THE INPUT OF THE DGE2 AND PROVIDE CCTV PREVIEW FUNCTION TO THE TOUCH SCREEN IF DESIRED.

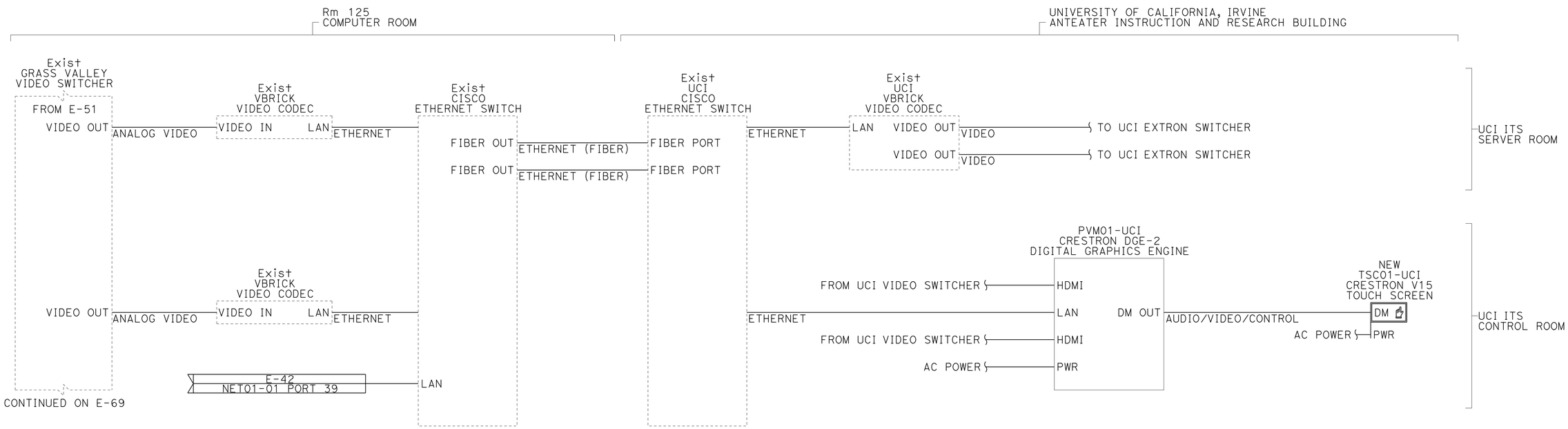

BLOCK DIAGRAM
INTERFACE BETWEEN CALTRANS AND THE UNIVERSITY OF CALIFORNIA IRVINE, INSTITUTE OF TRAFFIC STUDIES

ELECTRICAL DETAILS
(LINE DIAGRAM)

APPROVED FOR ELECTRICAL WORK ONLY

E-52

STATE OF CALIFORNIA - DEPARTMENT OF TRANSPORTATION
Caltrans®

CONSULTANT FUNCTIONAL SUPERVISOR: STEVE HUFF
CALCULATED-DESIGNED BY: JOSHUA MCNEILL
CHECKED BY: RANDY RATZLAFF
REVISED BY
DATE REVISED

LAST REVISION 04-01-15
DATE PLOTTED => 13-MAY-2015
TIME PLOTTED => 08:49

Dist	COUNTY	LOCATION	POST MILES TOTAL PROJECT	SHEET No.	TOTAL SHEETS
12	Ora	Var		54	91

REGISTERED CIVIL ENGINEER — DATE 2-25-15

May 04, 2015
PLANS APPROVAL DATE

REGISTERED PROFESSIONAL ENGINEER — CARLOS ORTIZ — No. 57535 — Exp. 12-31-15 — CIVIL — STATE OF CALIFORNIA

THE STATE OF CALIFORNIA OR ITS OFFICERS OR AGENTS SHALL NOT BE RESPONSIBLE FOR THE ACCURACY OR COMPLETENESS OF SCANNED COPIES OF THIS PLAN SHEET.

RBF CONSULTING
14725 ALTON PKWY
IRVINE, CA 92618

NOTES:

1. SEE SHEETS E-2, E-3 & E-4 FOR GENERAL NOTES, ABBREVIATIONS AND LEGEND.

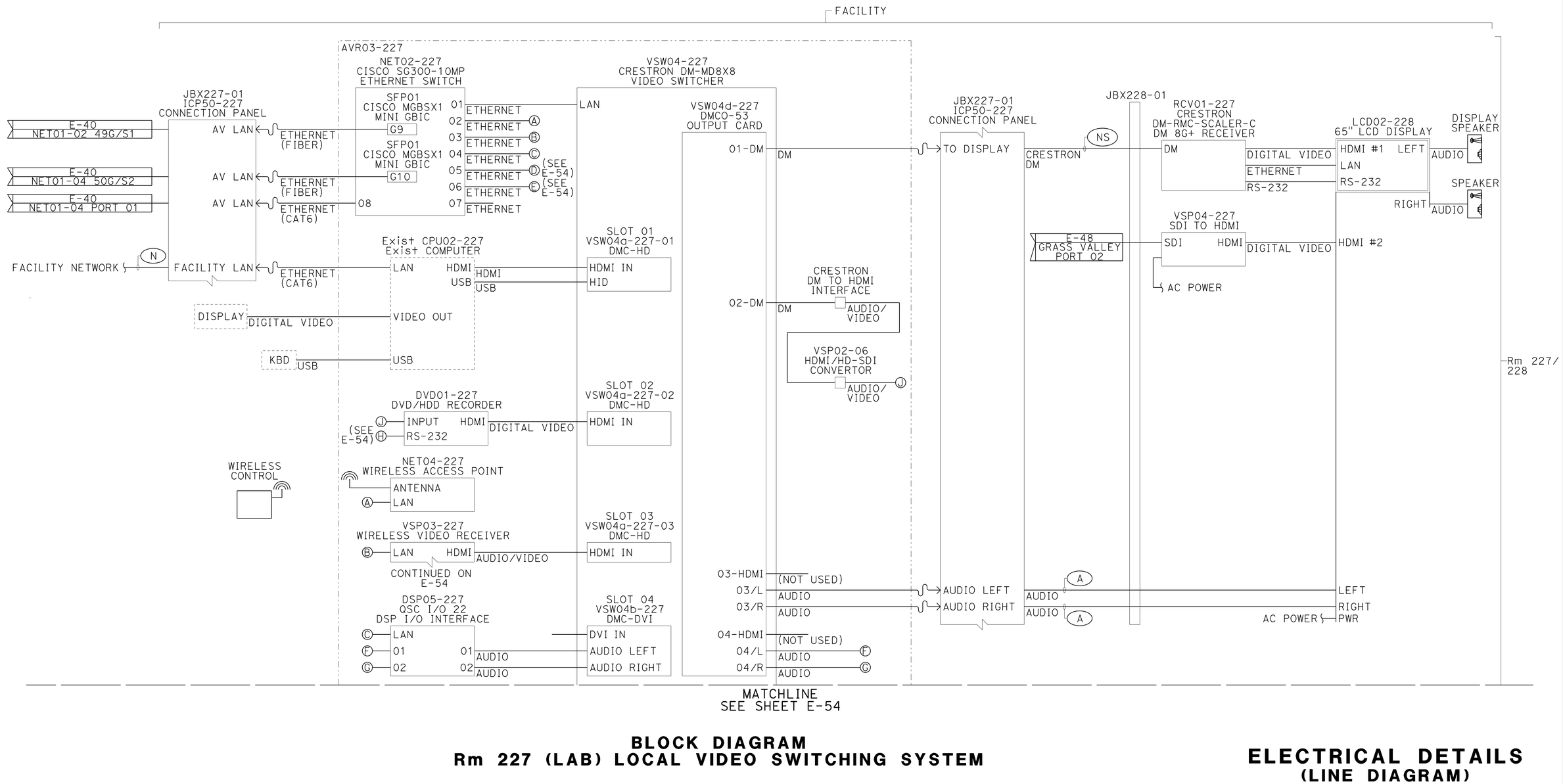

BLOCK DIAGRAM
Rm 227 (LAB) LOCAL VIDEO SWITCHING SYSTEM

ELECTRICAL DETAILS
(LINE DIAGRAM)

APPROVED FOR ELECTRICAL WORK ONLY

E-53

STATE OF CALIFORNIA - DEPARTMENT OF TRANSPORTATION
Caltrans
CONSULTANT FUNCTIONAL SUPERVISOR: STEVE HUFF
CALCULATED-DESIGNED BY: RANDY RATZLAFF
CHECKED BY: JOSHUA MCNEILL
REVISED BY
DATE REVISED

LAST REVISION 04-01-15
DATE PLOTTED => 13-MAY-2015
TIME PLOTTED => 08:49

Dist	COUNTY	LOCATION	POST MILES TOTAL PROJECT	SHEET No.	TOTAL SHEETS
12	Ora	Var		55	91

REGISTERED CIVIL ENGINEER — DATE 2-25-15

May 04, 2015
PLANS APPROVAL DATE

REGISTERED PROFESSIONAL ENGINEER — CARLOS ORTIZ — No. 57535 — Exp. 12-31-15 — CIVIL — STATE OF CALIFORNIA

THE STATE OF CALIFORNIA OR ITS OFFICERS OR AGENTS SHALL NOT BE RESPONSIBLE FOR THE ACCURACY OR COMPLETENESS OF SCANNED COPIES OF THIS PLAN SHEET.

RBF CONSULTING
14725 ALTON PKWY
IRVINE, CA 92618

NOTES:

1. SEE SHEETS E-2, E-3 & E-4 FOR GENERAL NOTES, ABBREVIATIONS AND LEGEND.

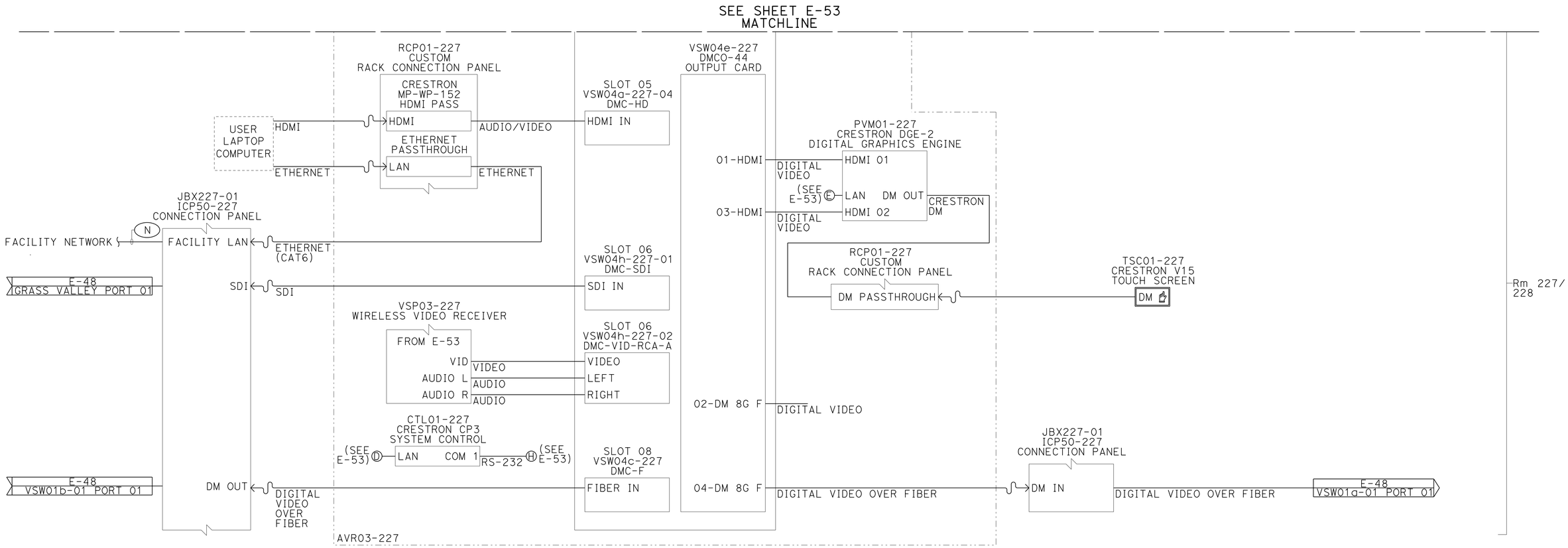

BLOCK DIAGRAM
Rm 227 (LAB) LOCAL VIDEO SWITCHING SYSTEM

ELECTRICAL DETAILS
(LINE DIAGRAM)

APPROVED FOR ELECTRICAL WORK ONLY

E-54

STATE OF CALIFORNIA - DEPARTMENT OF TRANSPORTATION
Caltrans

CONSULTANT FUNCTIONAL SUPERVISOR: STEVE HUFF
CALCULATED-DESIGNED BY: JOSHUA MCNEILL
CHECKED BY: RANDY RATZLAFF
REVISED BY
DATE REVISED

LAST REVISION 04-01-15
DATE PLOTTED => 13-MAY-2015
TIME PLOTTED => 08:49

Dist	COUNTY	LOCATION	POST MILES TOTAL PROJECT	SHEET No.	TOTAL SHEETS
12	Ora	Var		56	91

REGISTERED CIVIL ENGINEER — DATE 2-25-15

May 04, 2015
PLANS APPROVAL DATE

REGISTERED PROFESSIONAL ENGINEER — CARLOS ORTIZ — No. 57535 — Exp. 12-31-15 — CIVIL — STATE OF CALIFORNIA

THE STATE OF CALIFORNIA OR ITS OFFICERS OR AGENTS SHALL NOT BE RESPONSIBLE FOR THE ACCURACY OR COMPLETENESS OF SCANNED COPIES OF THIS PLAN SHEET.

RBF CONSULTING
14725 ALTON PKWY
IRVINE, CA 92618

NOTES:

1. SEE SHEETS E-2, E-3 & E-4 FOR GENERAL NOTES, ABBREVIATIONS AND LEGEND.

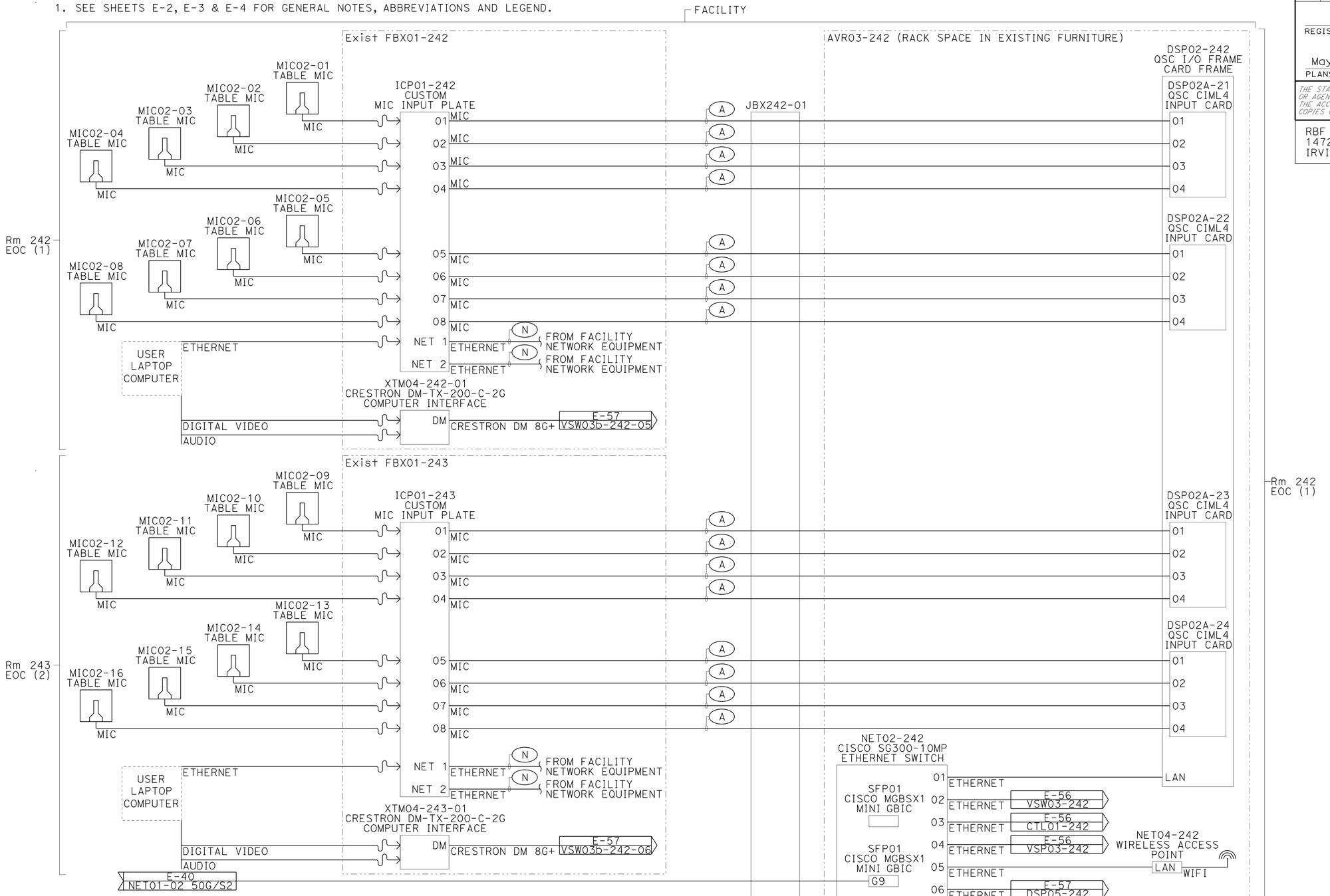

BLOCK DIAGRAM
Rm 242/243 FLOOR BOX CONNECTIONS
APPROVED FOR ELECTRICAL WORK ONLY

ELECTRICAL DETAILS
(LINE DIAGRAM)

E-55

STATE OF CALIFORNIA - DEPARTMENT OF TRANSPORTATION — Caltrans

CONSULTANT FUNCTIONAL SUPERVISOR: STEVE HUFF
CALCULATED-DESIGNED BY: JOSHUA MCNEILL
CHECKED BY: RANDY RATZLAFF
REVISED BY / DATE REVISED

LAST REVISION 04-01-15 | DATE PLOTTED => 13-MAY-2015 | TIME PLOTTED => 08:49

Dist	COUNTY	LOCATION	POST MILES TOTAL PROJECT	SHEET No.	TOTAL SHEETS
12	Ora	Var		57	91

REGISTERED CIVIL ENGINEER — DATE 2-25-15

May 04, 2015
PLANS APPROVAL DATE

REGISTERED PROFESSIONAL ENGINEER — CARLOS ORTIZ — No. 57535 — Exp. 12-31-15 — CIVIL — STATE OF CALIFORNIA

THE STATE OF CALIFORNIA OR ITS OFFICERS OR AGENTS SHALL NOT BE RESPONSIBLE FOR THE ACCURACY OR COMPLETENESS OF SCANNED COPIES OF THIS PLAN SHEET.

RBF CONSULTING
14725 ALTON PKWY
IRVINE, CA 92618

NOTES:

1. SEE SHEETS E-2, E-3 & E-4 FOR GENERAL NOTES, ABBREVIATIONS AND LEGEND.

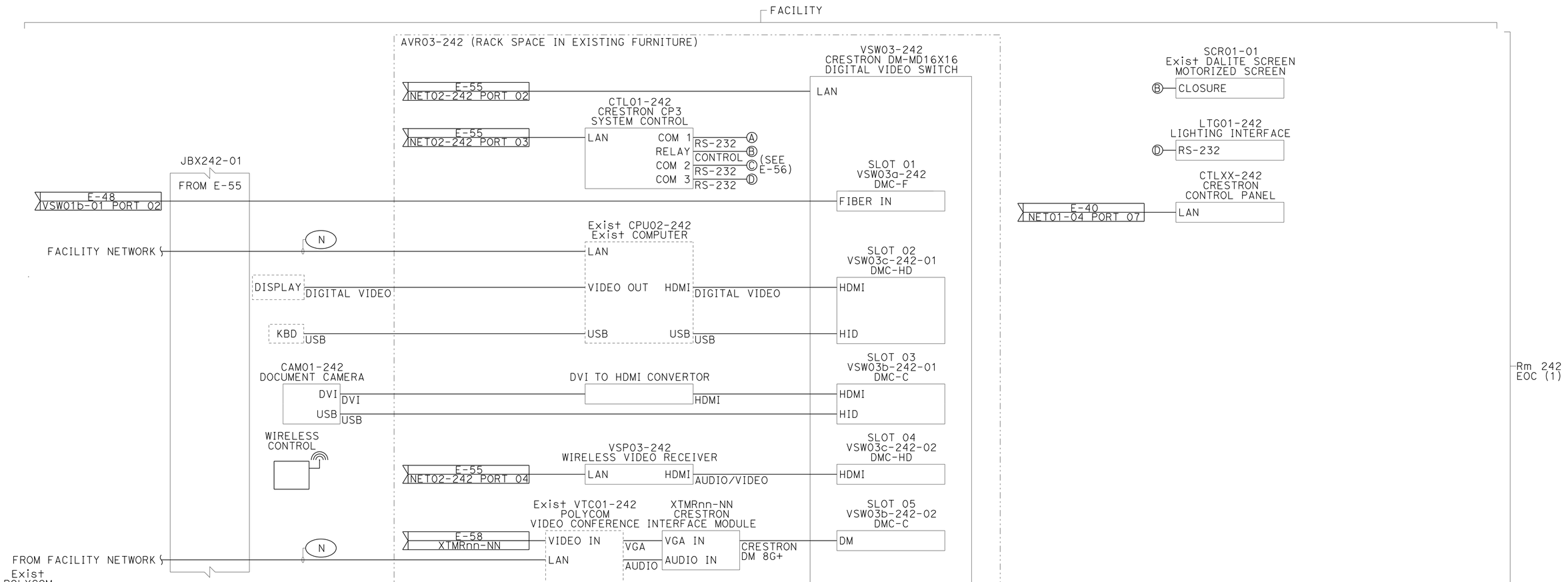

BLOCK DIAGRAM
Rm 242/243 LOCAL VIDEO SWITCHING SYSTEM

ELECTRICAL DETAILS
(LINE DIAGRAM)

APPROVED FOR ELECTRICAL WORK ONLY

E-56

STATE OF CALIFORNIA - DEPARTMENT OF TRANSPORTATION — Caltrans

CONSULTANT FUNCTIONAL SUPERVISOR: STEVE HUFF
CALCULATED-DESIGNED BY: JOSHUA MCNEILL
CHECKED BY: RANDY RATZLAFF
REVISED BY
DATE REVISED

LAST REVISION 04-01-15 | DATE PLOTTED => 13-MAY-2015 | TIME PLOTTED => 08:49

Dist	COUNTY	LOCATION	POST MILES TOTAL PROJECT	SHEET No.	TOTAL SHEETS
12	Ora	Var		58	91

REGISTERED CIVIL ENGINEER — DATE 2-25-15

May 04, 2015
PLANS APPROVAL DATE

REGISTERED PROFESSIONAL ENGINEER — CARLOS ORTIZ — No. 57535 — Exp. 12-31-15 — CIVIL — STATE OF CALIFORNIA

THE STATE OF CALIFORNIA OR ITS OFFICERS OR AGENTS SHALL NOT BE RESPONSIBLE FOR THE ACCURACY OR COMPLETENESS OF SCANNED COPIES OF THIS PLAN SHEET.

RBF CONSULTING
14725 ALTON PKWY
IRVINE, CA 92618

NOTES:

1. SEE SHEETS E-2, E-3 & E-4 FOR GENERAL NOTES, ABBREVIATIONS AND LEGEND.
2. XTM04-242-02 AND XTM4-242-03 TO BE INSTALLED IN EXISTING FURNITURE AND NOT ON THE WALL.

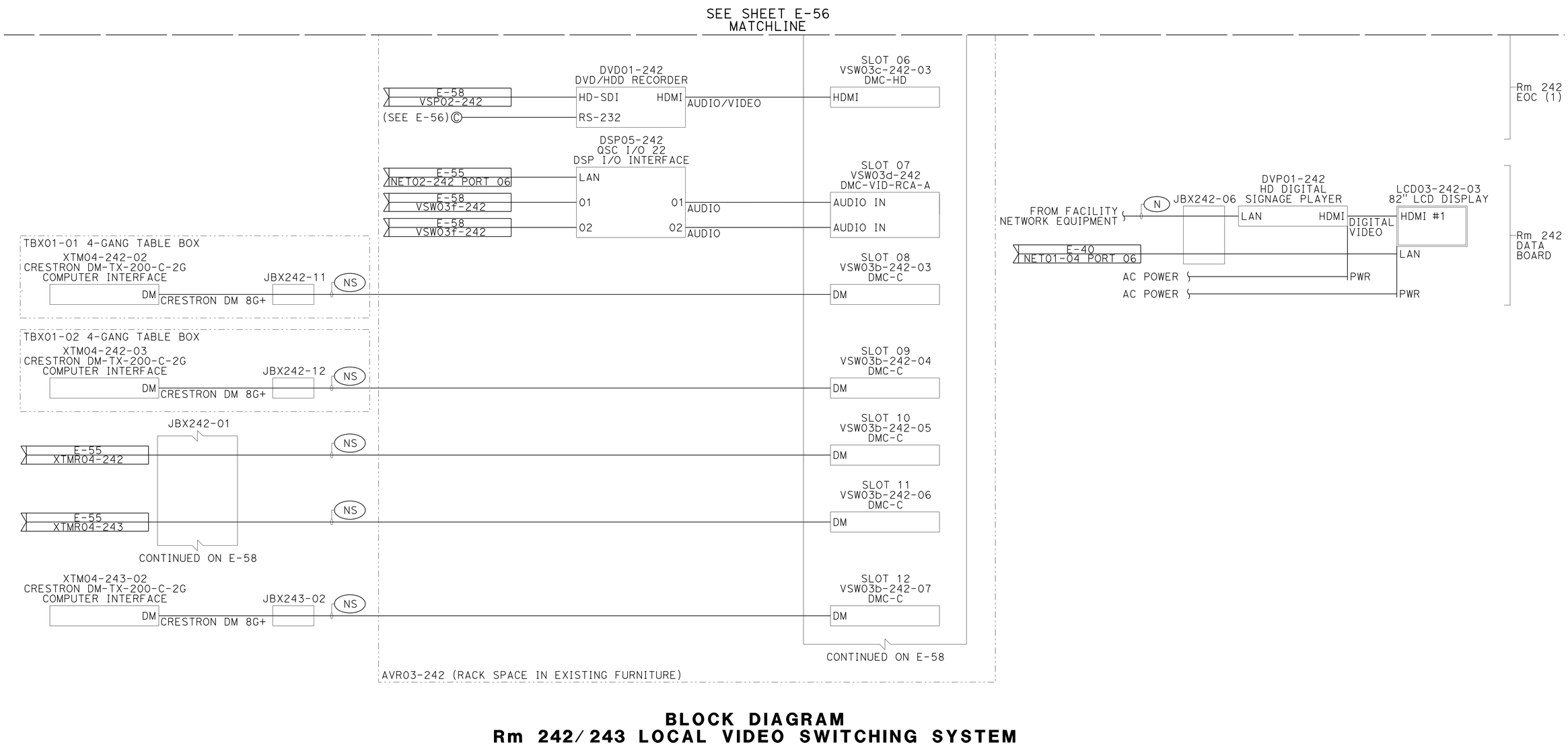

BLOCK DIAGRAM
Rm 242/243 LOCAL VIDEO SWITCHING SYSTEM

ELECTRICAL DETAILS
(LINE DIAGRAM)

APPROVED FOR ELECTRICAL WORK ONLY

E-57

STATE OF CALIFORNIA - DEPARTMENT OF TRANSPORTATION
Caltrans

CONSULTANT FUNCTIONAL SUPERVISOR: STEVE HUFF
CALCULATED-DESIGNED BY: JOSHUA MCNEILL
CHECKED BY: RANDY RATZLAFF
REVISED BY
DATE REVISED

LAST REVISION 04-01-15
DATE PLOTTED => 13-MAY-2015
TIME PLOTTED => 08:49

Dist	COUNTY	LOCATION	POST MILES TOTAL PROJECT	SHEET No.	TOTAL SHEETS
12	Ora	Var		59	91

REGISTERED CIVIL ENGINEER — DATE 2-25-15

May 04, 2015
PLANS APPROVAL DATE

REGISTERED PROFESSIONAL ENGINEER — CARLOS ORTIZ — No. 57535 — Exp. 12-31-15 — CIVIL — STATE OF CALIFORNIA

THE STATE OF CALIFORNIA OR ITS OFFICERS OR AGENTS SHALL NOT BE RESPONSIBLE FOR THE ACCURACY OR COMPLETENESS OF SCANNED COPIES OF THIS PLAN SHEET.

RBF CONSULTING
14725 ALTON PKWY
IRVINE, CA 92618

NOTES:

1. SEE SHEETS E-2, E-3 & E-4 FOR GENERAL NOTES, ABBREVIATIONS AND LEGEND.

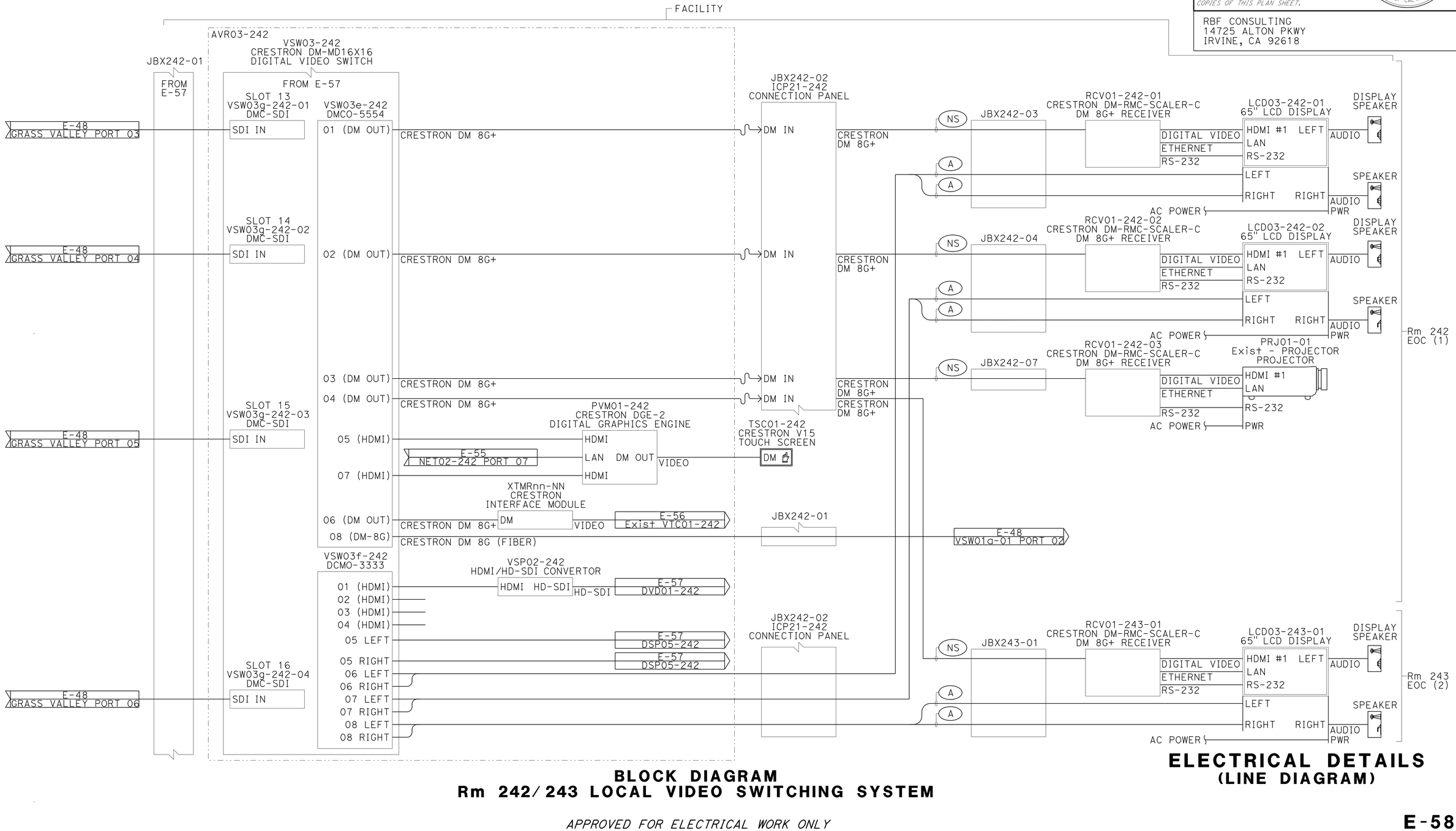

BLOCK DIAGRAM
Rm 242/243 LOCAL VIDEO SWITCHING SYSTEM

ELECTRICAL DETAILS
(LINE DIAGram)

APPROVED FOR ELECTRICAL WORK ONLY

E-58

STATE OF CALIFORNIA - DEPARTMENT OF TRANSPORTATION
Caltrans

CONSULTANT FUNCTIONAL SUPERVISOR: STEVE HUFF
CALCULATED-DESIGNED BY: RANDY RATZLAFF
CHECKED BY: JOSHUA MCNEILL
REVISED BY
DATE REVISED

LAST REVISION 04-01-15
DATE PLOTTED => 13-MAY-2015
TIME PLOTTED => 08:49

Dist	COUNTY	LOCATION	POST MILES TOTAL PROJECT	SHEET No.	TOTAL SHEETS
12	Ora	Var		60	91

REGISTERED CIVIL ENGINEER — DATE 2-25-15

May 04, 2015
PLANS APPROVAL DATE

REGISTERED PROFESSIONAL ENGINEER — CARLOS ORTIZ — No. 57535 — Exp. 12-31-15 — CIVIL — STATE OF CALIFORNIA

THE STATE OF CALIFORNIA OR ITS OFFICERS OR AGENTS SHALL NOT BE RESPONSIBLE FOR THE ACCURACY OR COMPLETENESS OF SCANNED COPIES OF THIS PLAN SHEET.

RBF CONSULTING
14725 ALTON PKWY
IRVINE, CA 92618

NOTES:

1. SEE SHEETS E-2, E-3 & E-4 FOR GENERAL NOTES, ABBREVIATIONS AND LEGEND.

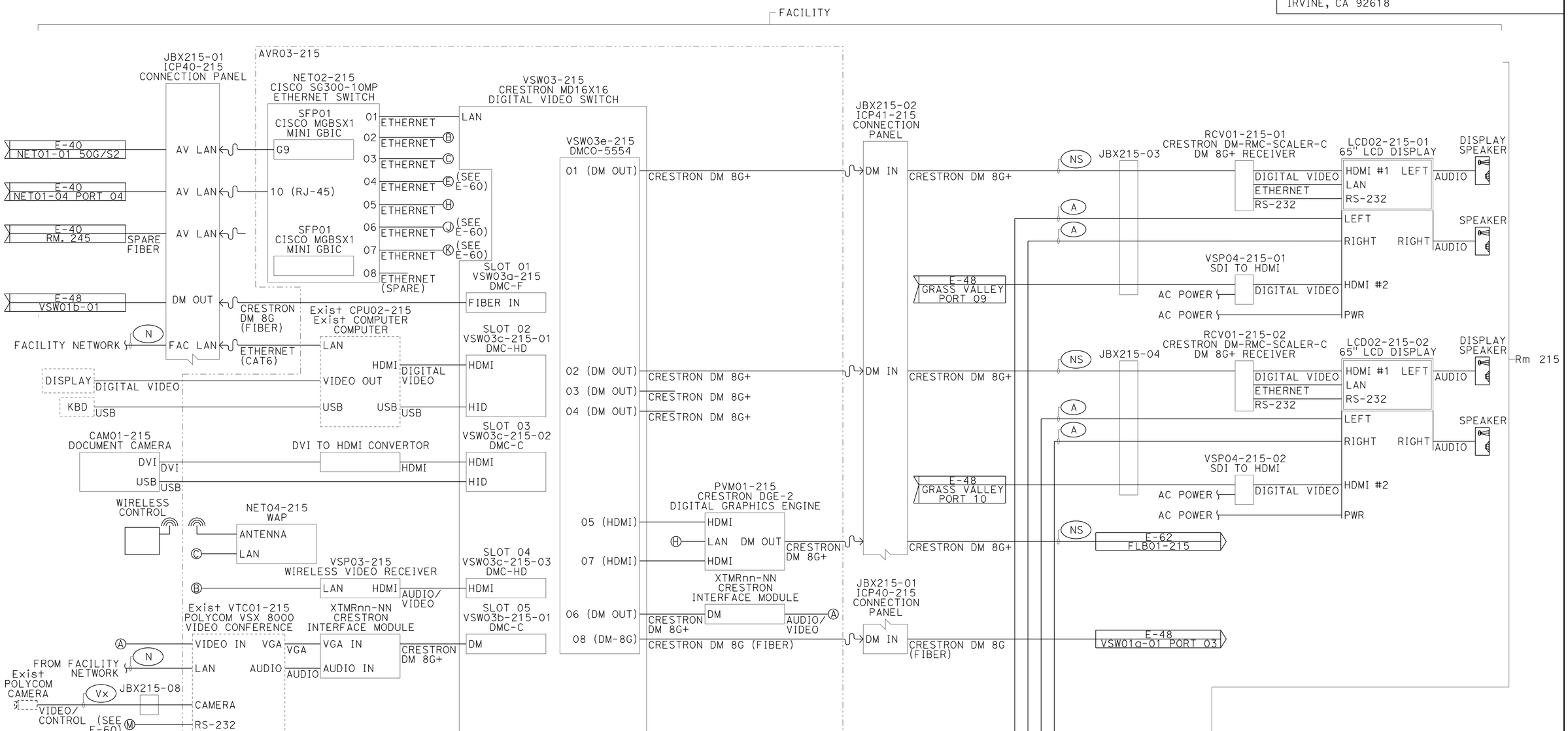

MATCHLINE
SEE SHEET E-60

BLOCK DIAGRAM
Rm 215 LOCAL VIDEO SWITCHING SYSTEM

ELECTRICAL DETAILS
(LINE DIAGRAM)

APPROVED FOR ELECTRICAL WORK ONLY

E-59

STATE OF CALIFORNIA - DEPARTMENT OF TRANSPORTATION
Caltrans

CONSULTANT FUNCTIONAL SUPERVISOR: STEVE HUFF
CALCULATED-DESIGNED BY: JOSHUA MCNEILL
CHECKED BY: RANDY RATZLAFF
REVISED BY
DATE REVISED

LAST REVISION 04-01-15
DATE PLOTTED => 13-MAY-2015
TIME PLOTTED => 08:49

Dist	COUNTY	LOCATION	POST MILES TOTAL PROJECT	SHEET No.	TOTAL SHEETS
12	Ora	Var		61	91

REGISTERED CIVIL ENGINEER — DATE 2-25-15

May 04, 2015
PLANS APPROVAL DATE

REGISTERED PROFESSIONAL ENGINEER — CARLOS ORTIZ — No. 57535 — Exp. 12-31-15 — CIVIL — STATE OF CALIFORNIA

THE STATE OF CALIFORNIA OR ITS OFFICERS OR AGENTS SHALL NOT BE RESPONSIBLE FOR THE ACCURACY OR COMPLETENESS OF SCANNED COPIES OF THIS PLAN SHEET.

RBF CONSULTING
14725 ALTON PKWY
IRVINE, CA 92618

NOTES:

1. SEE SHEETS E-2, E-3 & E-4 FOR GENERAL NOTES, ABBREVIATIONS AND LEGEND.

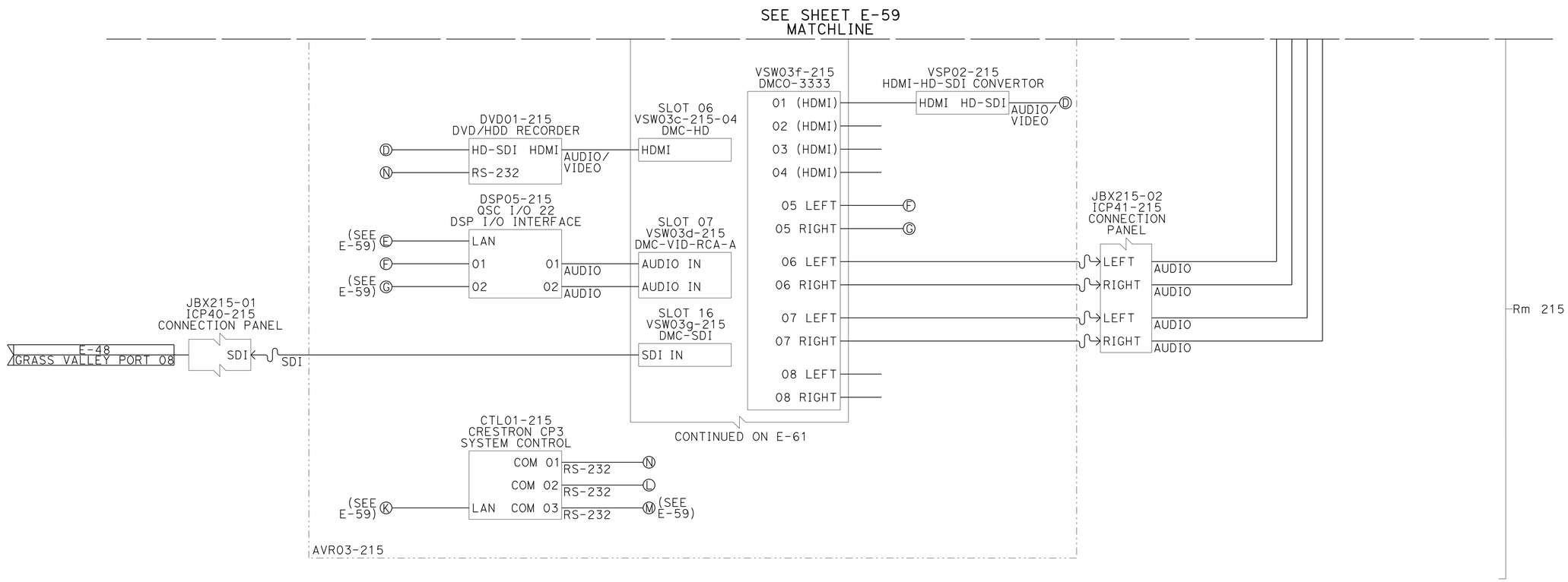

BLOCK DIAGRAM
Rm 215 LOCAL VIDEO SWITCHING SYSTEM

ELECTRICAL DETAILS
(LINE DIAGRAM)

APPROVED FOR ELECTRICAL WORK ONLY

E-60

STATE OF CALIFORNIA - DEPARTMENT OF TRANSPORTATION
Caltrans

CONSULTANT FUNCTIONAL SUPERVISOR: STEVE HUFF
CALCULATED-DESIGNED BY: JOSHUA MCNEILL
CHECKED BY: RANDY RATZLAFF
REVISED BY
DATE REVISED

LAST REVISION 04-01-15
DATE PLOTTED => 13-MAY-2015
TIME PLOTTED => 08:49

Dist	COUNTY	LOCATION	POST MILES TOTAL PROJECT	SHEET No.	TOTAL SHEETS
12	Ora	Var		62	91

REGISTERED CIVIL ENGINEER — DATE 2-25-15

May 04, 2015
PLANS APPROVAL DATE

REGISTERED PROFESSIONAL ENGINEER — CARLOS ORTIZ — No. 57535 — Exp. 12-31-15 — CIVIL — STATE OF CALIFORNIA

THE STATE OF CALIFORNIA OR ITS OFFICERS OR AGENTS SHALL NOT BE RESPONSIBLE FOR THE ACCURACY OR COMPLETENESS OF SCANNED COPIES OF THIS PLAN SHEET.

RBF CONSULTING
14725 ALTON PKWY
IRVINE, CA 92618

NOTES:

1. SEE SHEETS E-2, E-3 & E-4 FOR GENERAL NOTES, ABBREVIATIONS AND LEGEND.
2. TYPICAL FOR FOUR INTERFACES POINTS INSTALLED IN CONFERENCE ROOM TABLE.

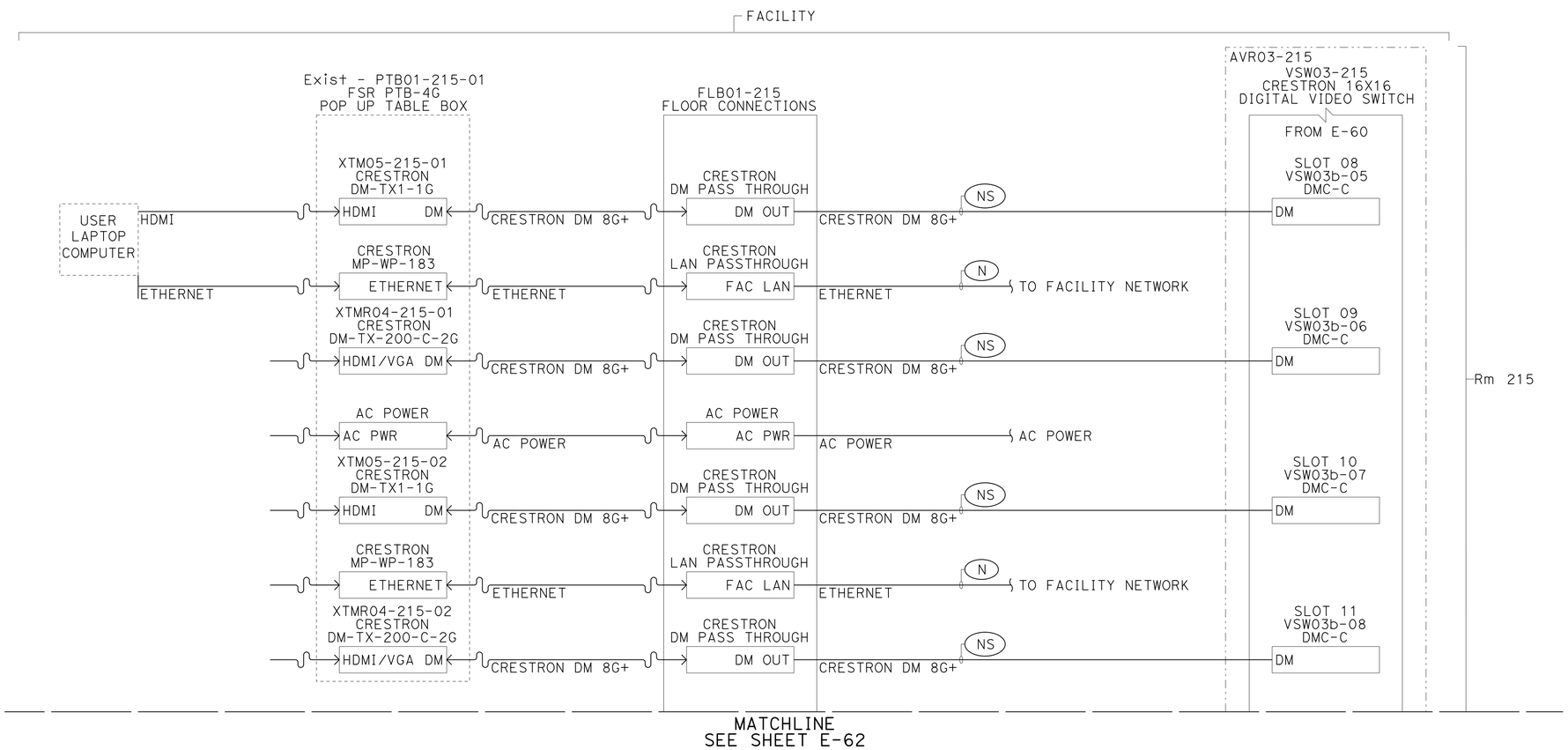

BLOCK DIAGRAM
Rm 215 LOCAL AV TRACK CONNECTIONS

ELECTRICAL DETAILS
(LINE DIAGRAM)

APPROVED FOR ELECTRICAL WORK ONLY

E-61

STATE OF CALIFORNIA - DEPARTMENT OF TRANSPORTATION
Caltrans

CONSULTANT FUNCTIONAL SUPERVISOR: STEVE HUFF
CALCULATED-DESIGNED BY: JOSHUA MCNEILL
CHECKED BY: RANDY RATZLAFF
REVISED BY
DATE REVISED

LAST REVISION 04-01-15
DATE PLOTTED => 13-MAY-2015
TIME PLOTTED => 08:49

Dist	COUNTY	LOCATION	POST MILES TOTAL PROJECT	SHEET No.	TOTAL SHEETS
12	Ora	Var		63	91

REGISTERED CIVIL ENGINEER — DATE 2-25-15

May 04, 2015
PLANS APPROVAL DATE

REGISTERED PROFESSIONAL ENGINEER — CARLOS ORTIZ — No. 57535 — Exp. 12-31-15 — CIVIL — STATE OF CALIFORNIA

THE STATE OF CALIFORNIA OR ITS OFFICERS OR AGENTS SHALL NOT BE RESPONSIBLE FOR THE ACCURACY OR COMPLETENESS OF SCANNED COPIES OF THIS PLAN SHEET.

RBF CONSULTING
14725 ALTON PKWY
IRVINE, CA 92618

NOTES:

1. SEE SHEETS E-2, E-3 & E-4 FOR GENERAL NOTES, ABBREVIATIONS AND LEGEND.

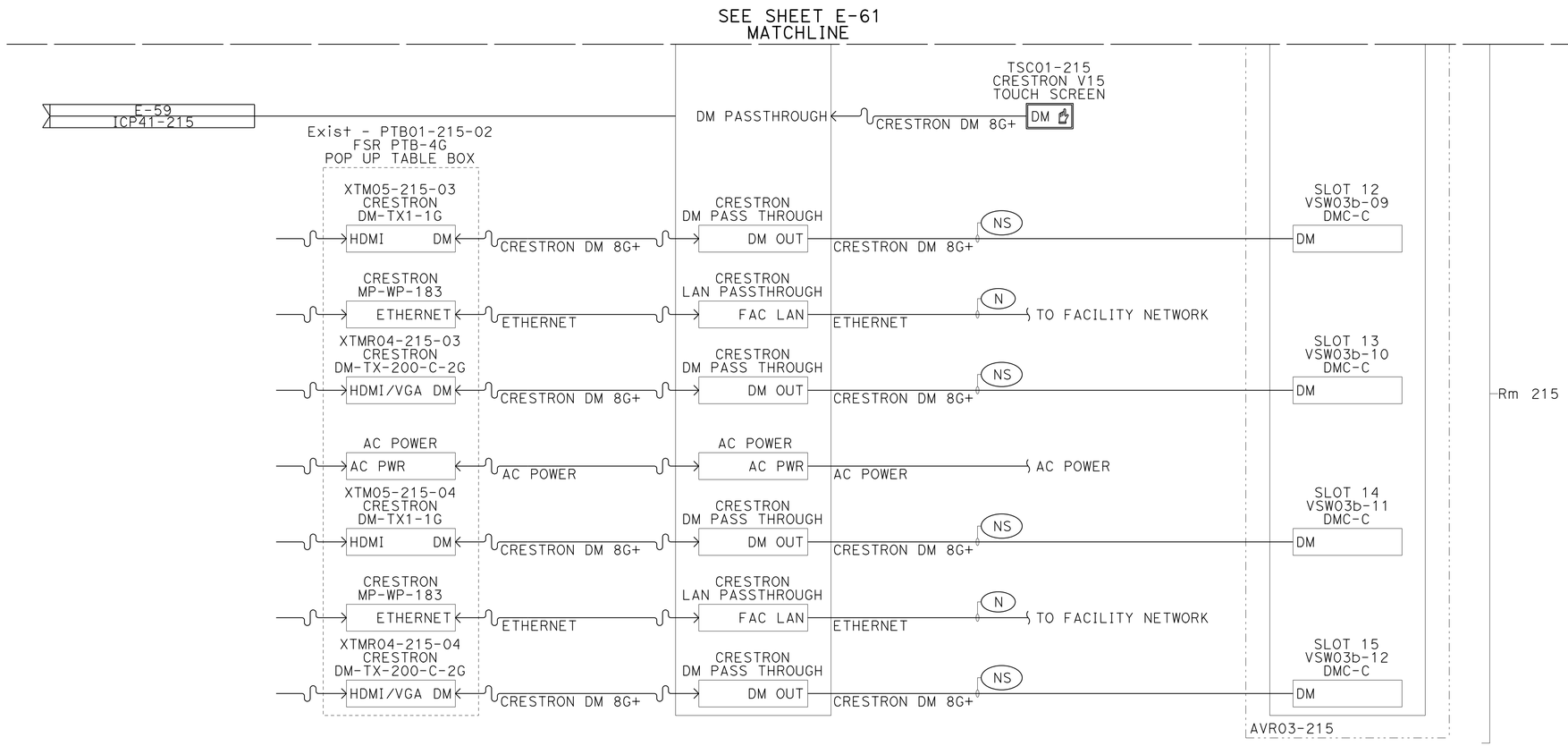

BLOCK DIAGRAM
Rm 215 LOCAL AV TRACK CONNECTIONS

ELECTRICAL DETAILS
(LINE DIAGRAM)

APPROVED FOR ELECTRICAL WORK ONLY

E-62

STATE OF CALIFORNIA - DEPARTMENT OF TRANSPORTATION
Caltrans

CONSULTANT FUNCTIONAL SUPERVISOR: STEVE HUFF
CALCULATED-DESIGNED BY: JOSHUA MCNEILL
CHECKED BY: RANDY RATZLAFF
REVISED BY
DATE REVISED

LAST REVISION 04-01-15
DATE PLOTTED => 13-MAY-2015
TIME PLOTTED => 08:49

Dist	COUNTY	LOCATION	POST MILES TOTAL PROJECT	SHEET No.	TOTAL SHEETS
12	Ora	Var		64	91

REGISTERED CIVIL ENGINEER 2-25-15 DATE

May 04, 2015
PLANS APPROVAL DATE

REGISTERED PROFESSIONAL ENGINEER CARLOS ORTIZ No. 57535 Exp. 12-31-15 CIVIL STATE OF CALIFORNIA

THE STATE OF CALIFORNIA OR ITS OFFICERS OR AGENTS SHALL NOT BE RESPONSIBLE FOR THE ACCURACY OR COMPLETENESS OF SCANNED COPIES OF THIS PLAN SHEET.

RBF CONSULTING
14725 ALTON PKWY
IRVINE, CA 92618

NOTES:

1. SEE SHEETS E-2, E-3 & E-4 FOR GENERAL NOTES, ABBREVIATIONS AND LEGEND.

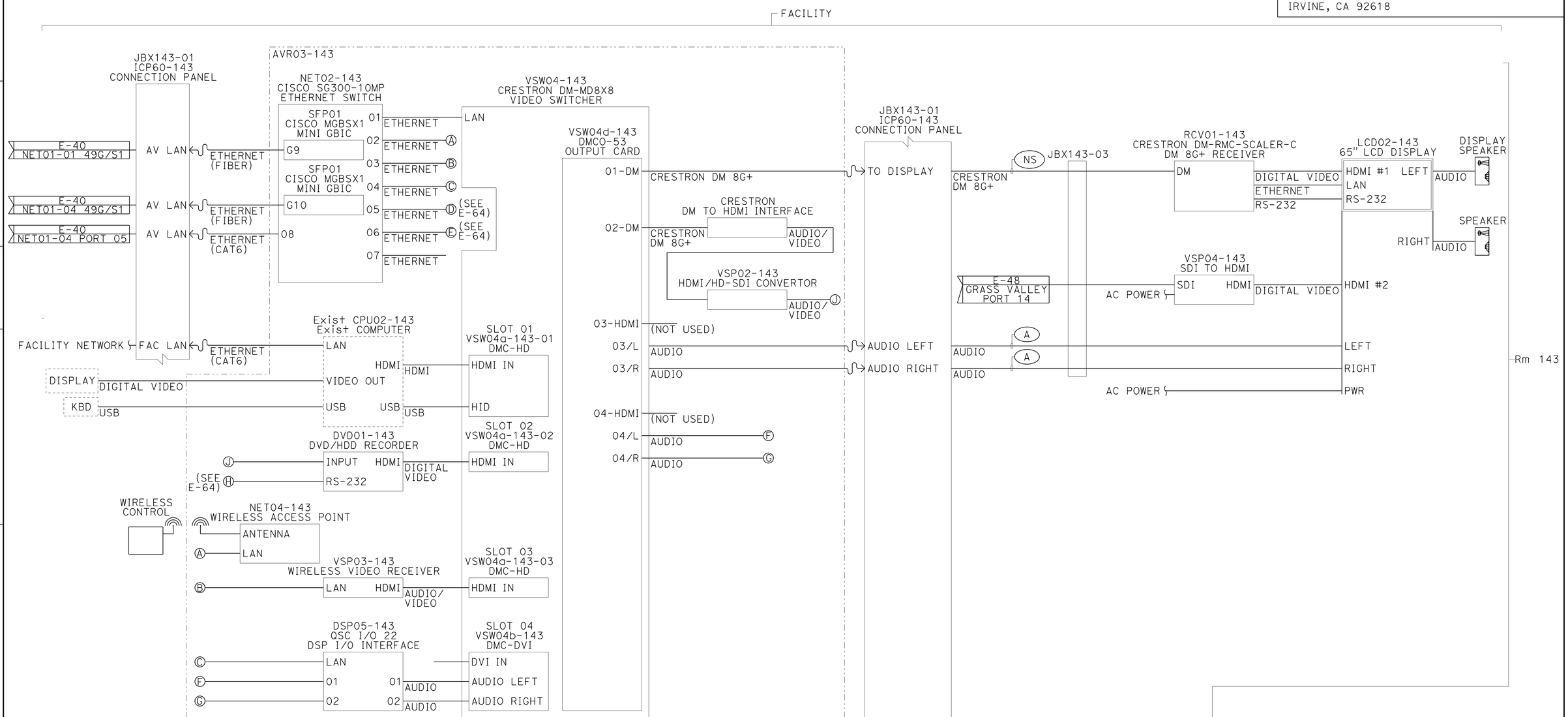

BLOCK DIAGRAM
Rm 143 LOCAL VIDEO SWITCHING SYSTEM

ELECTRICAL DETAILS
(LINE DIAGRAM)

APPROVED FOR ELECTRICAL WORK ONLY

E-63

STATE OF CALIFORNIA - DEPARTMENT OF TRANSPORTATION
Caltrans

CONSULTANT FUNCTIONAL SUPERVISOR: STEVE HUFF
CALCULATED-DESIGNED BY: RANDY RATZLAFF
CHECKED BY: JOSHUA MCNEILL
REVISED BY
DATE REVISED

LAST REVISION 04-01-15
DATE PLOTTED => 13-MAY-2015
TIME PLOTTED => 08:49

Dist	COUNTY	LOCATION	POST MILES TOTAL PROJECT	SHEET No.	TOTAL SHEETS
12	Ora	Var		65	91

REGISTERED CIVIL ENGINEER 2-25-15 DATE

May 04, 2015
PLANS APPROVAL DATE

REGISTERED PROFESSIONAL ENGINEER CARLOS ORTIZ No. 57535 Exp. 12-31-15 CIVIL STATE OF CALIFORNIA

THE STATE OF CALIFORNIA OR ITS OFFICERS OR AGENTS SHALL NOT BE RESPONSIBLE FOR THE ACCURACY OR COMPLETENESS OF SCANNED COPIES OF THIS PLAN SHEET.

RBF CONSULTING
14725 ALTON PKWY
IRVINE, CA 92618

NOTES:

1. SEE SHEETS E-2, E-3 & E-4 FOR GENERAL NOTES, ABBREVIATIONS AND LEGEND.

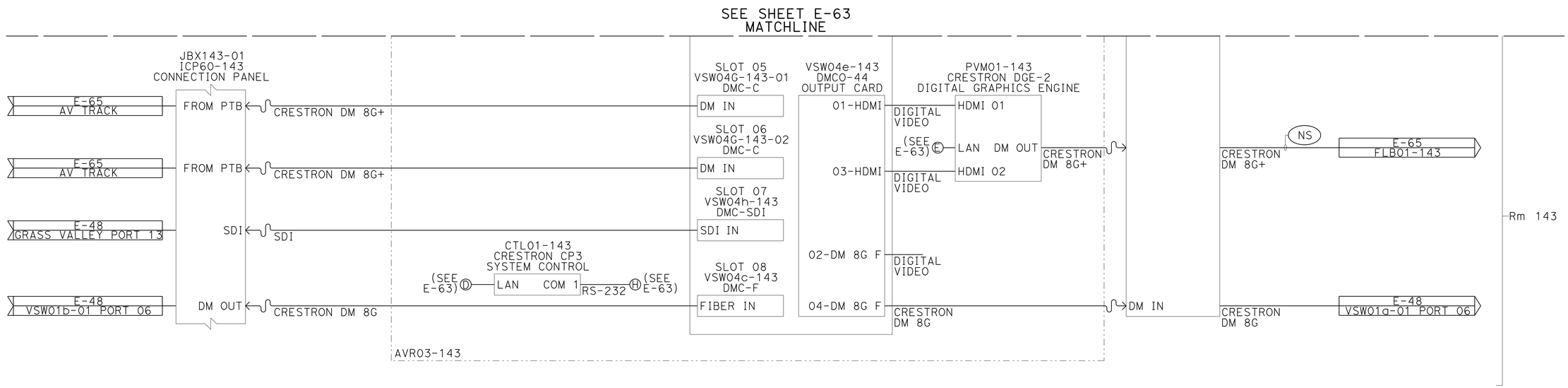

BLOCK DIAGRAM
Rm 143 LOCAL VIDEO SWITCHING SYSTEM

ELECTRICAL DETAILS
(LINE DIAGRAM)

APPROVED FOR ELECTRICAL WORK ONLY

E-64

STATE OF CALIFORNIA - DEPARTMENT OF TRANSPORTATION
Caltrans

CONSULTANT FUNCTIONAL SUPERVISOR: STEVE HUFF
CALCULATED-DESIGNED BY: JOSHUA MCNEILL
CHECKED BY: RANDY RATZLAFF
REVISED BY
DATE REVISED

LAST REVISION 04-01-15
DATE PLOTTED => 13-MAY-2015
TIME PLOTTED => 08:49

Dist	COUNTY	LOCATION	POST MILES TOTAL PROJECT	SHEET No.	TOTAL SHEETS
12	Ora	Var		66	91

REGISTERED CIVIL ENGINEER — DATE 2-25-15

May 04, 2015
PLANS APPROVAL DATE

REGISTERED PROFESSIONAL ENGINEER — CARLOS ORTIZ — No. 57535 — Exp. 12-31-15 — CIVIL — STATE OF CALIFORNIA

THE STATE OF CALIFORNIA OR ITS OFFICERS OR AGENTS SHALL NOT BE RESPONSIBLE FOR THE ACCURACY OR COMPLETENESS OF SCANNED COPIES OF THIS PLAN SHEET.

RBF CONSULTING
14725 ALTON PKWY
IRVINE, CA 92618

NOTES:

1. SEE SHEETS E-2, E-3 & E-4 FOR GENERAL NOTES, ABBREVIATIONS AND LEGEND.

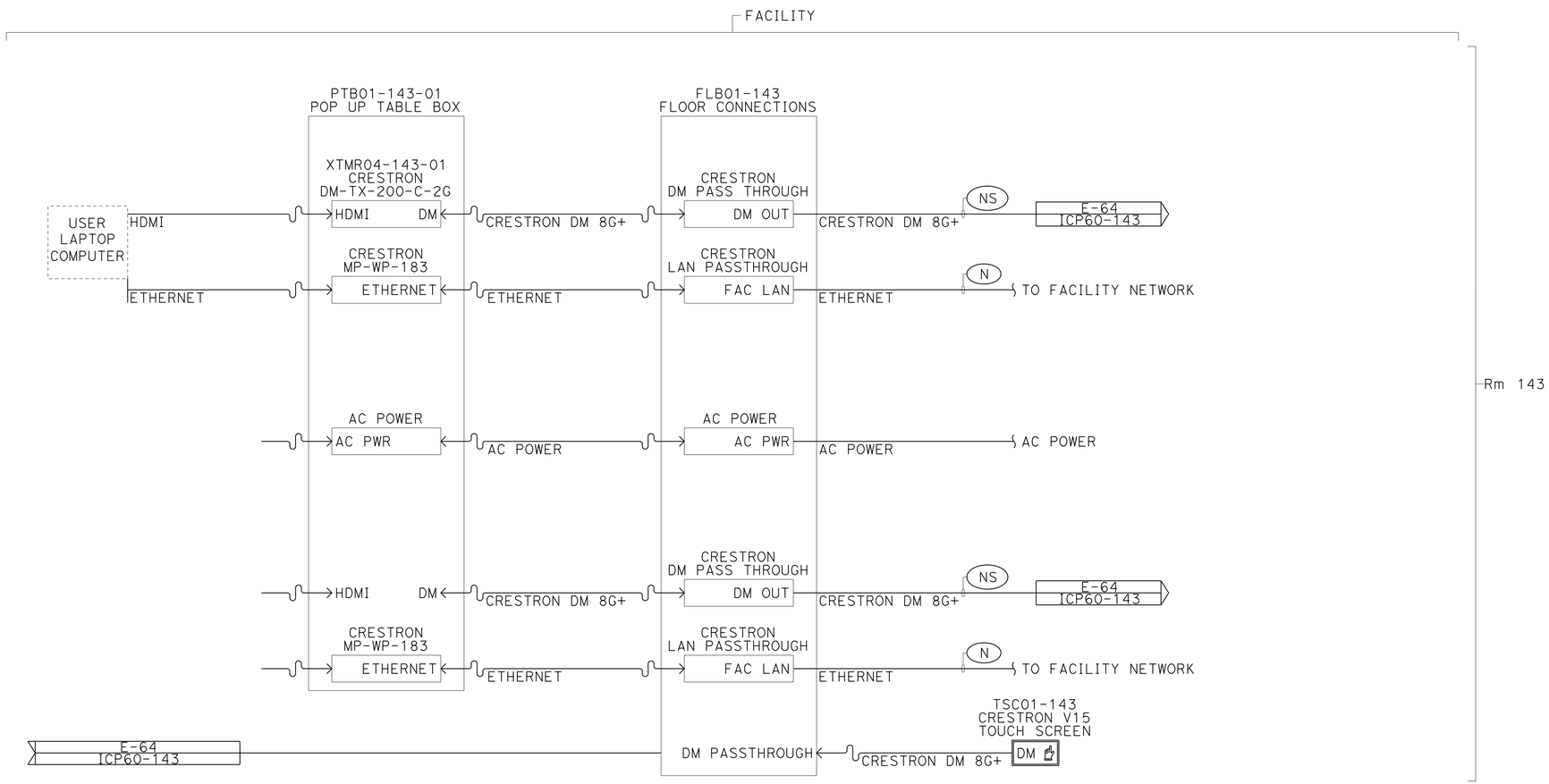

BLOCK DIAGRAM
Rm 143 DETAIL FOR POP UP TABLE BOX AND AV TRACK

ELECTRICAL DETAILS
(LINE DIAGRAM)

APPROVED FOR ELECTRICAL WORK ONLY

E-65

STATE OF CALIFORNIA - DEPARTMENT OF TRANSPORTATION
Caltrans

CONSULTANT FUNCTIONAL SUPERVISOR: STEVE HUFF
CALCULATED-DESIGNED BY: JOSHUA MCNEILL
CHECKED BY: RANDY RATZLAFF
REVISED BY
DATE REVISED

LAST REVISION 04-01-15
DATE PLOTTED => 13-MAY-2015
TIME PLOTTED => 08:49

Dist	COUNTY	LOCATION	POST MILES TOTAL PROJECT	SHEET No.	TOTAL SHEETS
12	Ora	Var		67	91

REGISTERED CIVIL ENGINEER — DATE 2-25-15

May 04, 2015
PLANS APPROVAL DATE

REGISTERED PROFESSIONAL ENGINEER — CARLOS ORTIZ — No. 57535 — Exp. 12-31-15 — CIVIL — STATE OF CALIFORNIA

THE STATE OF CALIFORNIA OR ITS OFFICERS OR AGENTS SHALL NOT BE RESPONSIBLE FOR THE ACCURACY OR COMPLETENESS OF SCANNED COPIES OF THIS PLAN SHEET.

RBF CONSULTING
14725 ALTON PKWY
IRVINE, CA 92618

NOTES:

1. SEE SHEETS E-2, E-3 & E-4 FOR GENERAL NOTES, ABBREVIATIONS AND LEGEND.

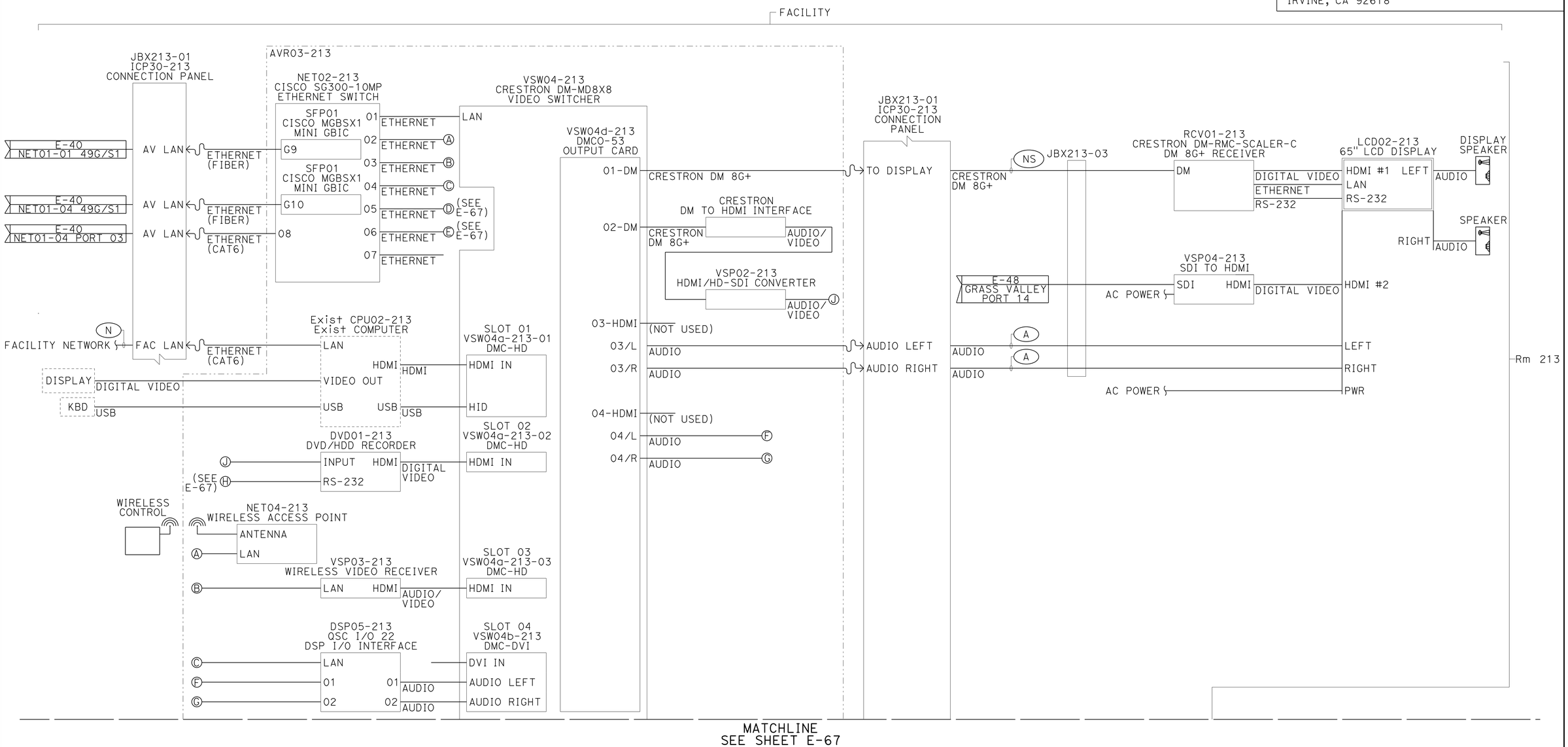

BLOCK DIAGRAM
Rm 213 LOCAL VIDEO SWITCHING SYSTEM

ELECTRICAL DETAILS
(LINE DIAGRAM)

APPROVED FOR ELECTRICAL WORK ONLY

E-66

STATE OF CALIFORNIA - DEPARTMENT OF TRANSPORTATION
Caltrans

CONSULTANT FUNCTIONAL SUPERVISOR: STEVE HUFF
CALCULATED-DESIGNED BY: RANDY RATZLAFF
CHECKED BY: JOSHUA MCNEILL
REVISED BY
DATE REVISED

LAST REVISION 04-01-15 | DATE PLOTTED => 13-MAY-2015 | TIME PLOTTED => 08:49

Dist	COUNTY	LOCATION	POST MILES TOTAL PROJECT	SHEET No.	TOTAL SHEETS
12	Ora	Var		68	91

REGISTERED CIVIL ENGINEER — DATE 2-25-15

May 04, 2015
PLANS APPROVAL DATE

REGISTERED PROFESSIONAL ENGINEER — CARLOS ORTIZ — No. 57535 — Exp. 12-31-15 — CIVIL — STATE OF CALIFORNIA

THE STATE OF CALIFORNIA OR ITS OFFICERS OR AGENTS SHALL NOT BE RESPONSIBLE FOR THE ACCURACY OR COMPLETENESS OF SCANNED COPIES OF THIS PLAN SHEET.

RBF CONSULTING
14725 ALTON PKWY
IRVINE, CA 92618

NOTES:

1. SEE SHEETS E-2, E-3 & E-4 FOR GENERAL NOTES, ABBREVIATIONS AND LEGEND.

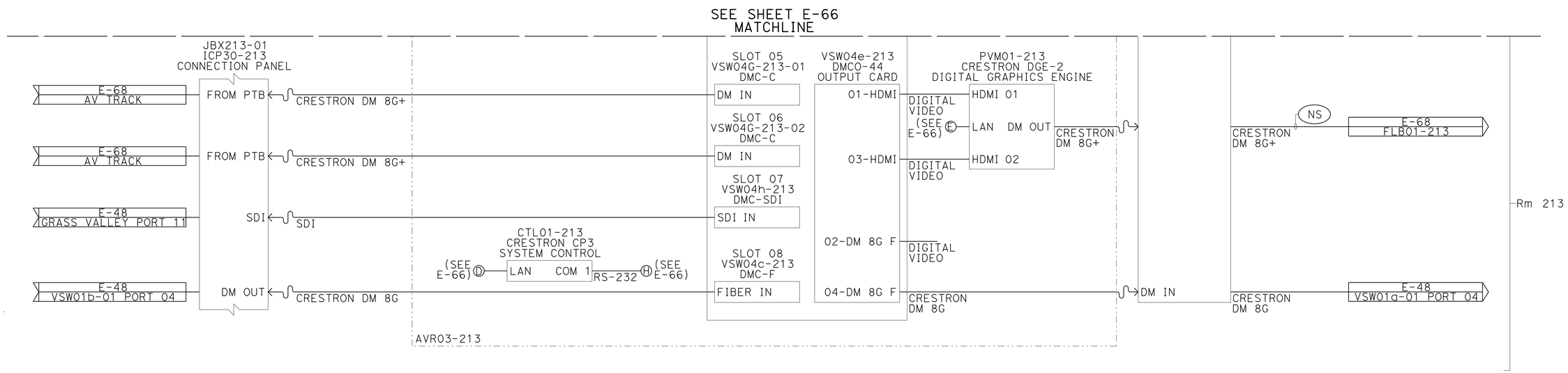

BLOCK DIAGRAM
Rm 213 LOCAL VIDEO SWITCHING SYSTEM

ELECTRICAL DETAILS
(LINE DIAGRAM)

APPROVED FOR ELECTRICAL WORK ONLY

E-67

STATE OF CALIFORNIA - DEPARTMENT OF TRANSPORTATION
Caltrans

CONSULTANT FUNCTIONAL SUPERVISOR: STEVE HUFF
CALCULATED-DESIGNED BY: JOSHUA MCNEILL
CHECKED BY: RANDY RATZLAFF
REVISED BY
DATE REVISED

LAST REVISION 04-01-15
DATE PLOTTED => 13-MAY-2015
TIME PLOTTED => 08:49

Dist	COUNTY	LOCATION	POST MILES TOTAL PROJECT	SHEET No.	TOTAL SHEETS
12	Ora	Var		69	91

REGISTERED CIVIL ENGINEER — DATE 2-25-15

May 04, 2015
PLANS APPROVAL DATE

REGISTERED PROFESSIONAL ENGINEER — CARLOS ORTIZ — No. 57535 — Exp. 12-31-15 — CIVIL — STATE OF CALIFORNIA

THE STATE OF CALIFORNIA OR ITS OFFICERS OR AGENTS SHALL NOT BE RESPONSIBLE FOR THE ACCURACY OR COMPLETENESS OF SCANNED COPIES OF THIS PLAN SHEET.

RBF CONSULTING
14725 ALTON PKWY
IRVINE, CA 92618

NOTES:

1. SEE SHEETS E-2, E-3 & E-4 FOR GENERAL NOTES, ABBREVIATIONS AND LEGEND.

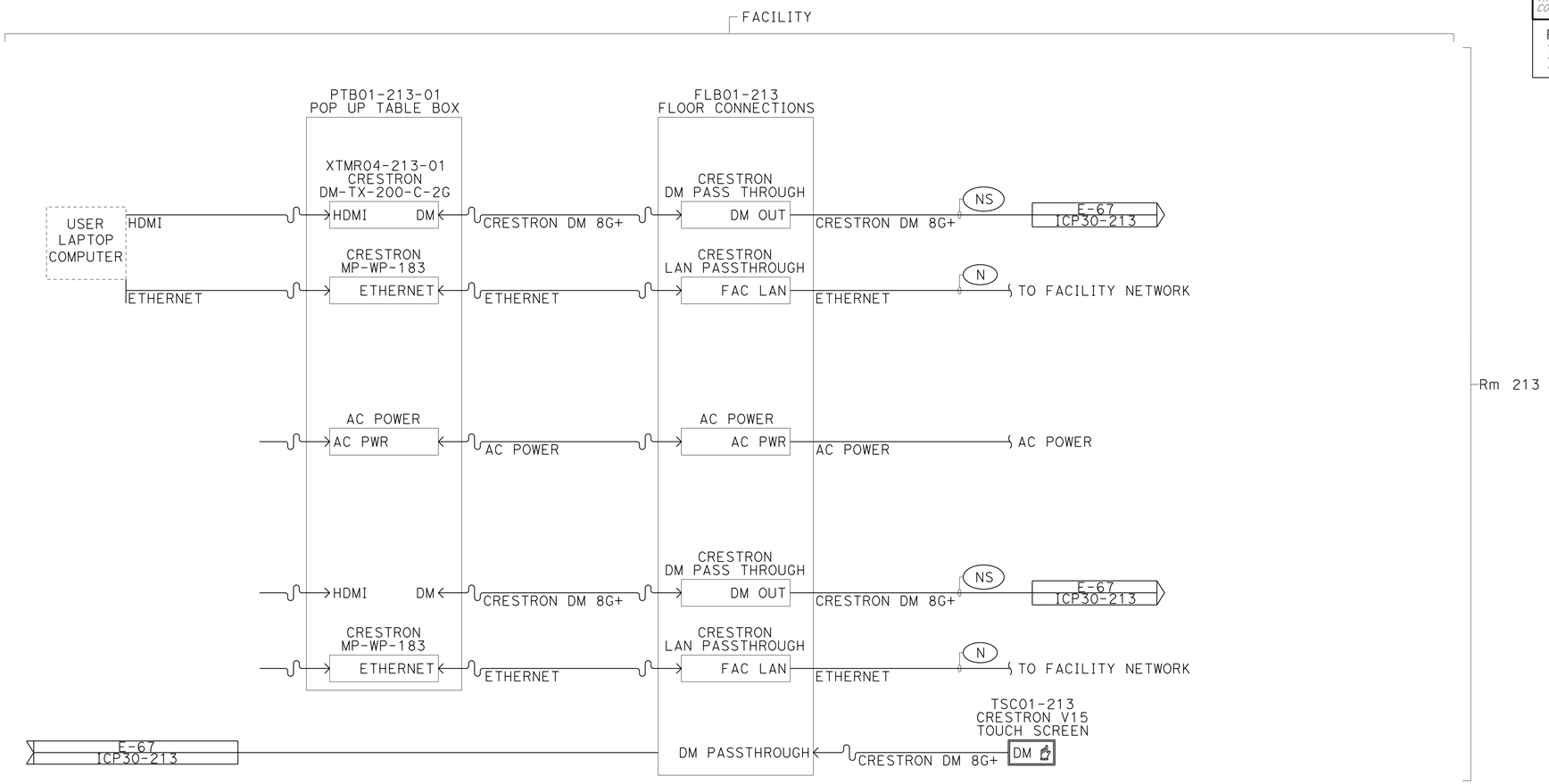

BLOCK DIAGRAM
Rm 213 DETAIL FOR POP UP TABLE BOX AND EXTRON AV TRACK

ELECTRICAL DETAILS
(LINE DIAGRAM)

APPROVED FOR ELECTRICAL WORK ONLY

E-68

STATE OF CALIFORNIA - DEPARTMENT OF TRANSPORTATION — Caltrans

CONSULTANT FUNCTIONAL SUPERVISOR: STEVE HUFF
CALCULATED-DESIGNED BY: JOSHUA MCNEILL
CHECKED BY: RANDY RATZLAFF
REVISED BY
DATE REVISED

LAST REVISION 04-01-15
DATE PLOTTED => 13-MAY-2015
TIME PLOTTED => 08:49

Dist	COUNTY	LOCATION	POST MILES TOTAL PROJECT	SHEET No.	TOTAL SHEETS
12	Ora	Var		70	91

REGISTERED CIVIL ENGINEER — DATE 2-25-15

May 04, 2015
PLANS APPROVAL DATE

REGISTERED PROFESSIONAL ENGINEER — CARLOS ORTIZ — No. 57535 — Exp. 12-31-15 — CIVIL — STATE OF CALIFORNIA

THE STATE OF CALIFORNIA OR ITS OFFICERS OR AGENTS SHALL NOT BE RESPONSIBLE FOR THE ACCURACY OR COMPLETENESS OF SCANNED COPIES OF THIS PLAN SHEET.

RBF CONSULTING
14725 ALTON PKWY
IRVINE, CA 92618

NOTES:

1. SEE SHEETS E-2, E-3 & E-4 FOR GENERAL NOTES, ABBREVIATIONS AND LEGEND.

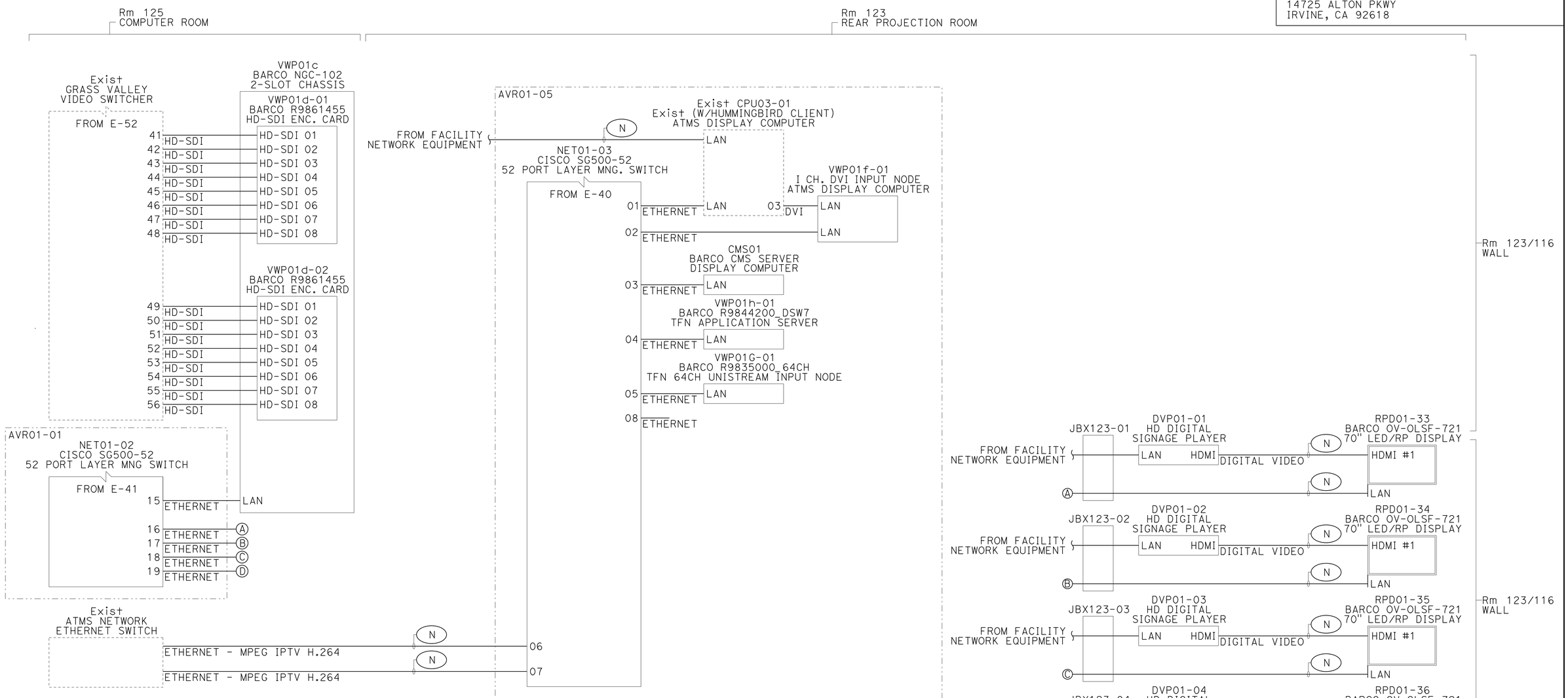

BLOCK DIAGRAM
VIDEO WALL AND DATA WALL DISPLAY/CONTROL

ELECTRICAL DETAILS
(LINE DIAGRAM)

APPROVED FOR ELECTRICAL WORK ONLY

E-69

STATE OF CALIFORNIA - DEPARTMENT OF TRANSPORTATION
Caltrans
CONSULTANT FUNCTIONAL SUPERVISOR: STEVE HUFF
CALCULATED-DESIGNED BY: JOSHUA MCNEILL
CHECKED BY: RANDY RATZLAFF
REVISED BY
DATE REVISED

LAST REVISION 04-01-15
DATE PLOTTED => 13-MAY-2015
TIME PLOTTED => 08:49

Dist	COUNTY	LOCATION	POST MILES TOTAL PROJECT	SHEET No.	TOTAL SHEETS
12	Ora	Var		71	91

REGISTERED CIVIL ENGINEER — DATE 2-25-15

May 04, 2015
PLANS APPROVAL DATE

REGISTERED PROFESSIONAL ENGINEER — CARLOS ORTIZ — No. 57535 — Exp. 12-31-15 — CIVIL — STATE OF CALIFORNIA

THE STATE OF CALIFORNIA OR ITS OFFICERS OR AGENTS SHALL NOT BE RESPONSIBLE FOR THE ACCURACY OR COMPLETENESS OF SCANNED COPIES OF THIS PLAN SHEET.

RBF CONSULTING
14725 ALTON PKWY
IRVINE, CA 92618

NOTES:

1. SEE SHEETS E-2, E-3 & E-4 FOR GENERAL NOTES, ABBREVIATIONS AND LEGEND.
2. ASSUME AV SYSTEM NETWORK SWITCH(S) FEEDS AV SYSTEM EQUIPMENT.
3. AV SYSTEM NETWORK SWITCH CONNECTS TO FACILITY NETWORK AND ATMS NETWORK AS NEEDED.

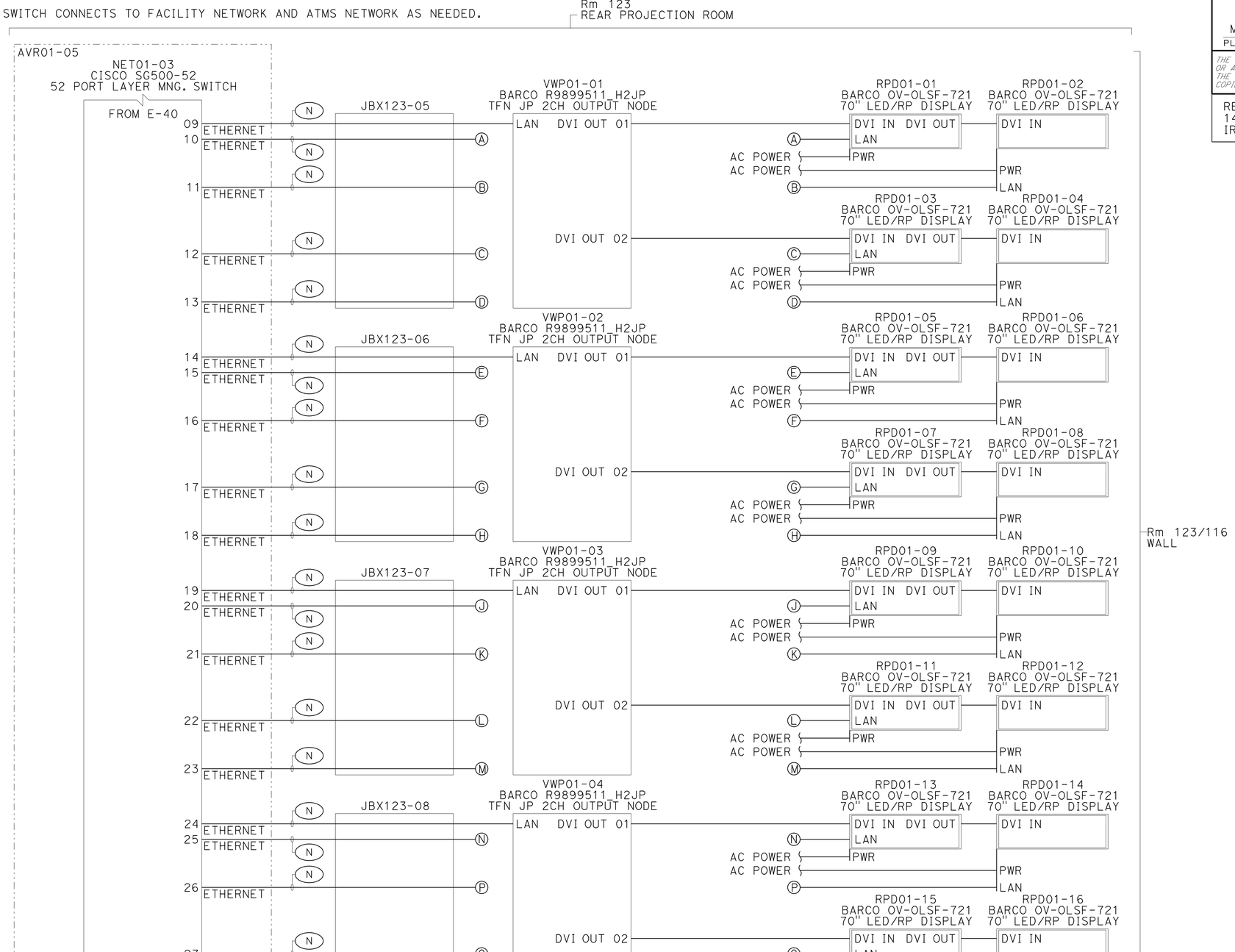

BLOCK DIAGRAM
VIDEO WALL AND DATA WALL DISPLAY/CONTROL

APPROVED FOR ELECTRICAL WORK ONLY

ELECTRICAL DETAILS
(LINE DIAGRAM)

E-70

STATE OF CALIFORNIA - DEPARTMENT OF TRANSPORTATION — Caltrans

CONSULTANT FUNCTIONAL SUPERVISOR: STEVE HUFF

CALCULATED-DESIGNED BY: JOSHUA MCNEILL — CHECKED BY: RANDY RATZLAFF — REVISED BY — DATE REVISED

LAST REVISION 04-01-15 — DATE PLOTTED => 13-MAY-2015 — TIME PLOTTED => 08:49

Dist	COUNTY	LOCATION	POST MILES TOTAL PROJECT	SHEET No.	TOTAL SHEETS
12	Ora	Var		72	91

REGISTERED CIVIL ENGINEER — DATE 2-25-15

May 04, 2015
PLANS APPROVAL DATE

REGISTERED PROFESSIONAL ENGINEER — CARLOS ORTIZ — No. 57535 — Exp. 12-31-15 — CIVIL — STATE OF CALIFORNIA

THE STATE OF CALIFORNIA OR ITS OFFICERS OR AGENTS SHALL NOT BE RESPONSIBLE FOR THE ACCURACY OR COMPLETENESS OF SCANNED COPIES OF THIS PLAN SHEET.

RBF CONSULTING
14725 ALTON PKWY
IRVINE, CA 92618

NOTES:

1. SEE SHEETS E-2, E-3 & E-4 FOR GENERAL NOTES, ABBREVIATIONS AND LEGEND.
2. ASSUME AV SYSTEM NETWORK SWITCH(S) FEEDS AV SYSTEM EQUIPMENT.
3. AV SYSTEM NETWORK SWITCH CONNECTS TO FACILITY NETWORK AND ATMS NETWORK AS NEEDED.

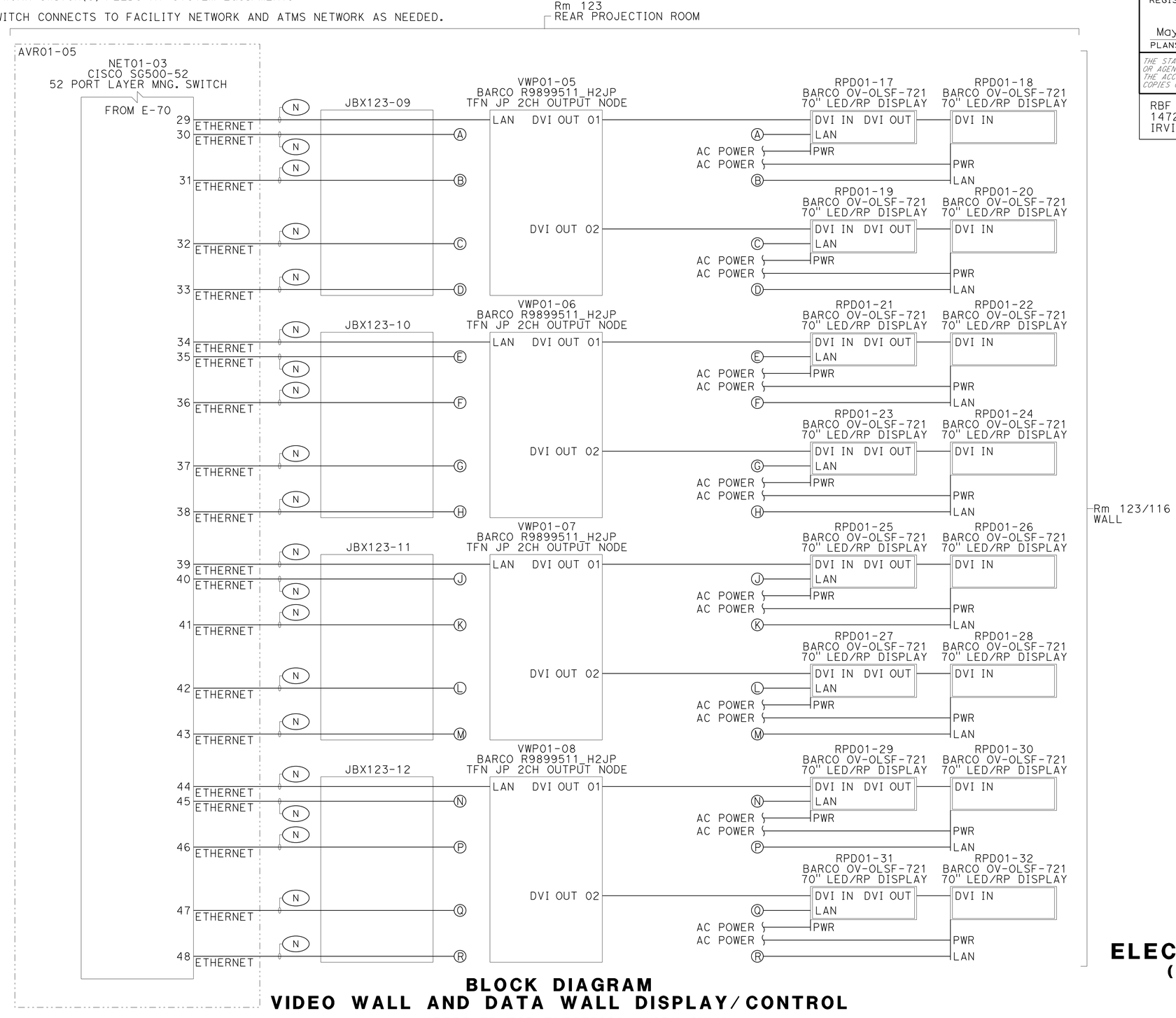

BLOCK DIAGRAM
VIDEO WALL AND DATA WALL DISPLAY/CONTROL

APPROVED FOR ELECTRICAL WORK ONLY

ELECTRICAL DETAILS
(LINE DIAGRAM)

E-71

REVISED BY	DATE REVISED
JOSHUA MCNEILL	RANDY RATZLAFF

CALCULATED-DESIGNED BY — CHECKED BY

CONSULTANT FUNCTIONAL SUPERVISOR: STEVE HUFF

STATE OF CALIFORNIA - DEPARTMENT OF TRANSPORTATION — Caltrans

LAST REVISION 04-01-15 | DATE PLOTTED => 13-MAY-2015 | TIME PLOTTED => 08:49

Dist	COUNTY	LOCATION	POST MILES TOTAL PROJECT	SHEET No.	TOTAL SHEETS
12	Ora	Var		73	91

REGISTERED CIVIL ENGINEER 2-25-15 DATE

May 04, 2015
PLANS APPROVAL DATE

REGISTERED PROFESSIONAL ENGINEER CARLOS ORTIZ No. 57535 Exp. 12-31-15 CIVIL STATE OF CALIFORNIA

THE STATE OF CALIFORNIA OR ITS OFFICERS OR AGENTS SHALL NOT BE RESPONSIBLE FOR THE ACCURACY OR COMPLETENESS OF SCANNED COPIES OF THIS PLAN SHEET.

RBF CONSULTING
14725 ALTON PKWY
IRVINE, CA 92618

NOTES:

1. ITEMS SHOWN IN TABLE(S) ARE NOT A SEPARATE PAY ITEM, FOR INFORMATION ONLY.

AUDIO VISUAL SYSTEM (LOCATION A1)

SHEET	ROOM	3 SLOT CARD INTERFACE	52-PORT SWITCH	64X64 VIDEO SWITCH	8-PORT HDMI IN	8-PORT HDMI OUT	AM/FM TUNER	AM/FM/SAT TUNER	AMP	AV RACK	BELTPACK RCVR	CARD FRAME	CASE AND CHARGER	CIML4 INPUT CARD	CODP4 OUTPUT CARD	COL4 OUTPUT CARD	COM PORT CARD	CORE 3000 DSP
		EA	EA	EA	EA	EA	EA	EA	EA	EA	EA	EA	EA	EA	EA	EA	EA	EA
E-6	125	1	2	1	5	5	4	2	3	4	5	6	1	18	3	2	1	1

AUDIO VISUAL SYSTEM (LOCATION A1 CONTINUED)

SHEET	ROOM	CP3 SYSTEM CONTROL	DGE	DVD/HDD RECORDER	Exist ATMS SWITCH	Exist CISCO SWITCH	Exist CPU	Exist DVD/HDD RECORDER	Exist GVS	Exist VIDEO CODEC	FIBER IN BLADE	FIBER OUT BLADE	HANDHELD XMTR	HDMI/HD-SDI CONVERTOR	HDTV TUNER	MINI GBIC
		EA	EA	EA	EA	EA	EA	EA	EA	EA	EA	EA	EA	EA	EA	EA
E-6	125	1	16	2	1	1	1	3	1	2	1	2	1	5	10	9

AUDIO VISUAL SYSTEM (LOCATION A1 CONTINUED)

SHEET	ROOM	RACK KEYBOARD	RACK LCD	SDI TO HDMI	STETHOPHONE RCVR	TUNER CARD FRAME	UPS	WIRELESS RCVR	WIRELESS XMTR	XMTR AND MIC	VIEWER LICENSE	SIDEBAR LICENSE	LEGACY LICENSE
		EA	EA	EA	EA	EA	EA	EA	EA	EA	EA	EA	EA
E-6	125	1	1	21	15	2	7	4	4	2	40	4	1

ELECTRICAL QUANTITIES

APPROVED FOR ELECTRICAL WORK ONLY

E-72

REVISED BY | DATE REVISED
JOSHUA MCNEILL | RANDY RATZLAFF
CALCULATED-DESIGNED BY | CHECKED BY
CONSULTANT FUNCTIONAL SUPERVISOR
STEVE HUFF
STATE OF CALIFORNIA - DEPARTMENT OF TRANSPORTATION
Caltrans

LAST REVISION 04-01-15 | DATE PLOTTED => 13-MAY-2015 TIME PLOTTED => 08:49

Dist	COUNTY	LOCATION	POST MILES TOTAL PROJECT	SHEET No.	TOTAL SHEETS
12	Ora	Var		74	91

REGISTERED CIVIL ENGINEER 2-25-15 DATE

May 04, 2015
PLANS APPROVAL DATE

REGISTERED PROFESSIONAL ENGINEER CARLOS ORTIZ No. 57535 Exp. 12-31-15 CIVIL STATE OF CALIFORNIA

THE STATE OF CALIFORNIA OR ITS OFFICERS OR AGENTS SHALL NOT BE RESPONSIBLE FOR THE ACCURACY OR COMPLETENESS OF SCANNED COPIES OF THIS PLAN SHEET.

RBF CONSULTING
14725 ALTON PKWY
IRVINE, CA 92618

NOTES:

1. ITEMS SHOWN IN TABLE(S) ARE NOT A SEPARATE PAY ITEM, FOR INFORMATION ONLY.

AUDIO VISUAL SYSTEM (LOCATION A2)

SHEET	ROOM	2CH OUTPUT NODE	2-SLOT CHASSIS	52-PORT SWITCH	APPLICATION SERVER	ATMS CPU	Exist AV EQUIPMENT RACK	AV RACK	BLU-RAY PLAYER	CISCO WAP	CMS CPU	HD-SDI ENCODER CARD	DM 8G XMTR	Exist CPU	Exist RACK	FIBER RCVR	FIBER XMTR	JBX
		EA	EA	EA	EA	EA	EA	EA	EA	EA	EA	EA	EA	EA	EA	EA	EA	EA
E-7	116								1	1							1	1
E-7	117																	1
E-7	118																	1
E-7	123	8	1	1	1	1	1	1			1	2	1	1	1	1		12

AUDIO VISUAL SYSTEM (LOCATION A2 CONTINUED)

SHEET	ROOM	MINI GBIC	RP DISPLAY	SIGNAGE PLAYER	TOUCH SCREEN	UNISTREAM INPUT NODE	UPS	Exist VIDEO WALL CONTROLLER	WALL PLATE	WALL SPEAKER	TFN KEYBOARD	TFN KEYBOARD EXTENSION
		EA	EA	EA	EA	EA	EA	EA	EA	EA	EA	EA
E-7	116				8					6		
E-7	117				1				1			
E-7	118				1				1			
E-7	123	2	36	4		1	1	1			8	8

ELECTRICAL QUANTITIES

APPROVED FOR ELECTRICAL WORK ONLY

E-73

REVISED BY | DATE REVISED
JOSHUA MCNEILL | RANDY RATZLAFF
CALCULATED-DESIGNED BY | CHECKED BY
CONSULTANT FUNCTIONAL SUPERVISOR | STEVE HUFF
STATE OF CALIFORNIA - DEPARTMENT OF TRANSPORTATION
Caltrans

LAST REVISION 04-01-15 | DATE PLOTTED => 13-MAY-2015 TIME PLOTTED => 08:49

Dist	COUNTY	LOCATION	POST MILES TOTAL PROJECT	SHEET No.	TOTAL SHEETS
12	Ora	Var		75	91

REGISTERED CIVIL ENGINEER 2-25-15 DATE

May 04, 2015
PLANS APPROVAL DATE

REGISTERED PROFESSIONAL ENGINEER CARLOS ORTIZ No. 57535 Exp. 12-31-15 CIVIL STATE OF CALIFORNIA

THE STATE OF CALIFORNIA OR ITS OFFICERS OR AGENTS SHALL NOT BE RESPONSIBLE FOR THE ACCURACY OR COMPLETENESS OF SCANNED COPIES OF THIS PLAN SHEET.

RBF CONSULTING
14725 ALTON PKWY
IRVINE, CA 92618

NOTES:

1. ITEMS SHOWN IN TABLE(S) ARE NOT A SEPARATE PAY ITEM, FOR INFORMATION ONLY.

AUDIO VISUAL SYSTEM (LOCATION A3)

SHEET	ROOM	10MP SWITCH	65" DISPLAY	8X8 VIDEO SWITCH	AC POWER	ANT	CREDENZA RACK	BLU-RAY PLAYER	CEILING SPEAKER	CISCO WAP	CONNECTION PANEL	CONNECTION PLATE	CONNECTION PLATE/ANT MOUNT	CP3 SYSTEM CONTROL	DGE	DISPLAY SPEAKER	DM 8G FIBER RCVR	DM 8G+ RCVR
		EA	EA	EA	EA	EA	EA	EA	EA	EA	EA	EA	EA	EA	EA	EA	EA	EA
E-8	101		1							1							1	
E-8	108																	
E-8	112																	
E-8	113		2					1									2	
E-8	143	1	1	1	2	1	1		4		1	1	2	1	1	2		1

AUDIO VISUAL SYSTEM (LOCATION A3 CONTINUED)

SHEET	ROOM	DM PASSTHROUGH	DM TO HDMI INTERFACE	DMC-C	DMC-DVI	DMC-F	DMC-HD	DMCO-44 OUTPUT CARD	DMCO-53 OUTPUT CARD	DMC-SDI	DM-TX-200-C-2G	DSP I/O INTERFACE	DVD/HDD RECORDER	Exist CPU	Exist DISPLAY	Exist KEYBOARD	Exist LAPTOP	FIBER XMTR
		EA	EA	EA	EA	EA	EA	EA	EA	EA	EA	EA	EA	EA	EA	EA	EA	EA
E-8	101																	
E-8	108																	
E-8	112																	
E-8	113																	1
E-8	143	2	1	2	1	1	3	1	1	1	1	1	1	1	1	1	1	

AUDIO VISUAL SYSTEM (LOCATION A3 CONTINUED)

SHEET	ROOM	FLOOR CONNECTIONS	HDMI/HD-SDI CONVERTOR	JBX	LAN PASSTHROUGH	MIC ANT	MINI GBIC	MP-WP-183	SDI TO HDMI	TABLE BOX	TOUCH SCREEN	WALL PLATE	WAP	WIRELESS CONTROL	WIRELESS VIDEO RCVR
		EA	EA	EA	EA	EA	EA	EA	EA	EA	EA	EA	EA	EA	EA
E-8	101			2										1	
E-8	108			1							1	1			
E-8	112			1							1	1			
E-8	113			3											
E-8	143	1	1	5	2	2	2	2	1	1	1		1	1	1

AUDIO VISUAL SYSTEM (LOCATION A3 CONTINUED)

SHEET	ROOM	BODYPACK XMTR	OMNI LAVALIER
		EA	EA
E-8	101		
E-8	108		
E-8	112		
E-8	113		
E-8	143	1	1

ELECTRICAL QUANTITIES

APPROVED FOR ELECTRICAL WORK ONLY

E-74

REVISED BY | DATE REVISED
JOSHUA MCNEILL | RANDY RATZLAFF
CALCULATED-DESIGNED BY | CHECKED BY
CONSULTANT FUNCTIONAL SUPERVISOR: STEVE HUFF
STATE OF CALIFORNIA - DEPARTMENT OF TRANSPORTATION
Caltrans

LAST REVISION 04-01-15 | DATE PLOTTED => 13-MAY-2015 | TIME PLOTTED => 08:49

Dist	COUNTY	LOCATION	POST MILES TOTAL PROJECT	SHEET No.	TOTAL SHEETS
12	Ora	Var		76	91

REGISTERED CIVIL ENGINEER — DATE 2-25-15

May 04, 2015
PLANS APPROVAL DATE

REGISTERED PROFESSIONAL ENGINEER — CARLOS ORTIZ — No. 57535 — Exp. 12-31-15 — CIVIL — STATE OF CALIFORNIA

THE STATE OF CALIFORNIA OR ITS OFFICERS OR AGENTS SHALL NOT BE RESPONSIBLE FOR THE ACCURACY OR COMPLETENESS OF SCANNED COPIES OF THIS PLAN SHEET.

RBF CONSULTING
14725 ALTON PKWY
IRVINE, CA 92618

NOTES:

1. ITEMS SHOWN IN TABLE(S) ARE NOT A SEPARATE PAY ITEM, FOR INFORMATION ONLY.

AUDIO VISUAL SYSTEM (LOCATION A4)

SHEET	ROOM	10MP SWITCH	65" DISPLAY	8X8 VIDEO SWITCH	CREDENZA RACK	BACK BOX FOR WALL MOUNT TOUCH SCREEN	CISCO WAP	CONNECTION PANEL	CP3 SYSTEM CONTROL	DGE	DISPLAY SPEAKER	DM 8G FIBER RCVR	DM 8G+ RCVR	DM TO HDMI INTERFACE	DMC-DVI	DMC-F	DMC-HD
		EA	EA	EA	EA	EA	EA	EA	EA	EA	EA	EA	EA	EA	EA	EA	EA
E-9	227/228	1	1	1	1			1	1	1	2		1	1	1	1	4
E-9	231		1			1	1					1					

AUDIO VISUAL SYSTEM (LOCATION A4 CONTINUED)

SHEET	ROOM	DMCO-44 OUTPUT CARD	DMCO-53 OUTPUT CARD	DMC-SDI	DMC-VID -RCA-A	DSP I/O INTERFACE	DVD/HDD RECORDER	ETHERNET PASSTHROUGH	Exist CPU	Exist DISPLAY	Exist KEYBOARD	Exist LAPTOP	HDMI/HD-SDI CONVERTOR	JBX	MINI GBIC	MP-WP-152 HDMI PASS
		EA	EA	EA	EA	EA	EA	EA	EA	EA	EA	EA	EA	EA	EA	EA
E-9	227/228	1	1	1	1	1	1	1	1	1	1	1	1	2	2	1
E-9	231													2		

AUDIO VISUAL SYSTEM (LOCATION A4 CONTINUED)

SHEET	ROOM	RACK CONNECTION PANEL	SDI TO HDMI	TOUCH SCREEN	WALL MOUNT TOUCH SCREEN	WAP	WIRELESS CONTROL	WIRELESS VIDEO RCVR
		EA	EA	EA	EA	EA	EA	EA
E-9	227/228	1	1	1		1	1	1
E-9	231				1			

ELECTRICAL QUANTITIES

APPROVED FOR ELECTRICAL WORK ONLY

E-75

STATE OF CALIFORNIA - DEPARTMENT OF TRANSPORTATION — Caltrans

CONSULTANT FUNCTIONAL SUPERVISOR: STEVE HUFF
CALCULATED-DESIGNED BY / CHECKED BY
JOSHUA MCNEILL / RANDY RATZLAFF
REVISED BY / DATE REVISED

LAST REVISION 04-01-15 | DATE PLOTTED => 13-MAY-2015 | TIME PLOTTED => 08:49

Dist	COUNTY	LOCATION	POST MILES TOTAL PROJECT	SHEET No.	TOTAL SHEETS
12	Ora	Var		77	91

REGISTERED CIVIL ENGINEER 2-25-15 DATE

May 04, 2015
PLANS APPROVAL DATE

REGISTERED PROFESSIONAL ENGINEER CARLOS ORTIZ No. 57535 Exp. 12-31-15 CIVIL STATE OF CALIFORNIA

THE STATE OF CALIFORNIA OR ITS OFFICERS OR AGENTS SHALL NOT BE RESPONSIBLE FOR THE ACCURACY OR COMPLETENESS OF SCANNED COPIES OF THIS PLAN SHEET.

RBF CONSULTING
14725 ALTON PKWY
IRVINE, CA 92618

NOTES:

1. ITEMS SHOWN IN TABLE(S) ARE NOT A SEPARATE PAY ITEM, FOR INFORMATION ONLY.

AUDIO VISUAL SYSTEM (LOCATION A5)

SHEET	ROOM	10MP SWITCH	16X16 VIDEO SWITCH	52-PORT SWITCH	65" DISPLAY	ANT	ROTATING RACK RAILS	CARD FRAME	CEILING SPEAKER	CIML4 INPUT CARD	CONNECTION PANEL	CONNECTION PLATE	CONNECTION PLATE/ANT MOUNT	CONTROL PANEL
		EA	EA	EA	EA	EA	EA	EA	EA	EA	EA	EA	EA	EA
E-10	242	1	1		2	1	2	1	2	4	1	1	2	1
E-10	243				1				2					
E-10	245			1										

AUDIO VISUAL SYSTEM (LOCATION A5 CONTINUED)

SHEET	ROOM	CP3 SYSTEM CONTROL	DGE	DISPLAY SPEAKER	DM 8G+ RCVR	DMC-C	DMC-F	DMC-HD	DMCO-3333	DMCO-5554	DMC-SDI	DMC-VID -RCA-A	DM-TX-200-C-2G	DOCUMENT CAMERA	DSP I/O INTERFACE	DVD/HDD RECORDER	DVI TO HDMI CONVERTOR	Exist CAMERA
		EA	EA	EA	EA	EA	EA	EA	EA	EA	EA	EA	EA	EA	EA	EA	EA	EA
E-10	242	1	1	4	3	7	1	3	1	1	4	1	3	1	1	1	1	1
E-10	243			2	1								2					
E-10	245																	

AUDIO VISUAL SYSTEM (LOCATION A5 CONTINUED)

SHEET	ROOM	Exist CPU	Exist DISPLAY	Exist FLOOR BOX	Exist KEYBOARD	Exist LAPTOP	Exist MOTORIZED SCREEN	Exist PROJECTOR	Exist VIDEO CONFERENCE	HDMI/HD-SDI CONVERTOR	INTERFACE MODULE	JBX	LIGHTING INTERFACE	MIC ANT	MIC PLATE	MINI GBIC	SIGNAGE PLAYER	TABLE BOX
		EA	EA	EA	EA	EA	EA	EA	EA	EA	EA	EA	EA	EA	EA	EA	EA	EA
E-10	242	1	1	1	1	1	1	1	1	1	2	12	1	2	1	2	1	2
E-10	243			1		1						2			1			
E-10	245															5		

AUDIO VISUAL SYSTEM (LOCATION A5 CONTINUED)

SHEET	ROOM	TABLE MIC	TOUCH SCREEN	WAP	WIRELESS CONTROL	WIRELESS VIDEO RCVR	BODYPACK XMTR	OMNI LAVALIER	82" DISPLAY
		EA	EA	EA	EA	EA	EA	EA	EA
E-10	242	8	1	1	1	1	1	1	1
E-10	243	8							
E-10	245								

ELECTRICAL QUANTITIES

APPROVED FOR ELECTRICAL WORK ONLY

E-76

REVISED BY | DATE REVISED
JOSHUA MCNEILL | RANDY RATZLAFF
CALCULATED-DESIGNED BY | CHECKED BY
CONSULTANT FUNCTIONAL SUPERVISOR | STEVE HUFF
STATE OF CALIFORNIA - DEPARTMENT OF TRANSPORTATION
Caltrans

LAST REVISION 04-01-15 | DATE PLOTTED => 13-MAY-2015 | TIME PLOTTED => 08:49

Dist	COUNTY	LOCATION	POST MILES TOTAL PROJECT	SHEET No.	TOTAL SHEETS
12	Ora	Var		78	91

REGISTERED CIVIL ENGINEER 2-25-15 DATE

May 04, 2015
PLANS APPROVAL DATE

REGISTERED PROFESSIONAL ENGINEER CARLOS ORTIZ No. 57535 Exp. 12-31-15 CIVIL STATE OF CALIFORNIA

THE STATE OF CALIFORNIA OR ITS OFFICERS OR AGENTS SHALL NOT BE RESPONSIBLE FOR THE ACCURACY OR COMPLETENESS OF SCANNED COPIES OF THIS PLAN SHEET.

RBF CONSULTING
14725 ALTON PKWY
IRVINE, CA 92618

NOTES:

1. ITEMS SHOWN IN TABLE(S) ARE NOT A SEPARATE PAY ITEM, FOR INFORMATION ONLY.

AUDIO VISUAL SYSTEM (LOCATION A6)

SHEET	ROOM	10MP SWITCH	16x16 VIDEO SWITCH	65" DISPLAY	8X8 VIDEO SWITCH	AC POWER	ANT	CREDENZA RACK	BLU-RAY PLAYER	CEILING SPEAKER	CONNECTION PANEL	CONNECTION PLATE	CONNECTION PLATE/ANT MOUNT	CP3 SYSTEM CONTROL
		EA	EA	EA	EA	EA	EA	EA	EA	EA	EA	EA	EA	EA
E-11	201			1					1					
E-11	213	1		1	1	2	1	1		4	1	1	2	1
E-11	215	1	1	2		4	1	1		4	2	1	2	1
E-11	217													
E-11	220													
E-11	230									4				
E-11	247													

AUDIO VISUAL SYSTEM (LOCATION A6 CONTINUED)

SHEET	ROOM	DGE	DISPLAY SPEAKER	DM 8G FIBER RCVR	DM 8G+ RCVR	DM PASSTHROUGH	DM TO HDMI INTERFACE	DMC-C	DMC-DVI	DMC-F	DMC-HD	DMCO-3333	DMCO-44 OUTPUT CARD	DMCO-53 OUTPUT CARD	DMCO-5554	DMC-SDI	DMC-VID -RCA-A	DM-TX1-1G
		EA	EA	EA	EA	EA	EA	EA	EA	EA	EA	EA	EA	EA	EA	EA	EA	EA
E-11	201		2	1														
E-11	213	1	2		1	2	1	2	1	1	3		1	1		1		
E-11	215	1	4		2	8		10		1	3	1			1	1	1	4
E-11	217																	
E-11	220																	
E-11	230																	
E-11	247																	

AUDIO VISUAL SYSTEM (LOCATION A6 CONTINUED)

SHEET	ROOM	DM-TX-200-C-2G	DOCUMENT CAMERA	DSP I/O INTERFACE	DVD/HDD RECORDER	DVI TO HDMI CONVERTOR	Exist CAMERA	Exist CPU	Exist DISPLAY	Exist KEYBOARD	Exist LAPTOP	Exist TABLE BOX	Exist VIDEO CONFERENCE	FLOOR CONNECTIONS	HDMI/HD-SDI CONVERTOR	INTERFACE MODULE	JBX	LAN PASSTHROUGH
		EA	EA	EA	EA	EA	EA	EA	EA	EA	EA	EA	EA	EA	EA	EA	EA	EA
E-11	201																1	
E-11	213	1		1	1			1	1	1	1			1	1		5	2
E-11	215	4	1	1	1	1	1	1	1	1	1	2	1	1	1	2	8	4
E-11	217																1	
E-11	220																1	
E-11	230																	
E-11	247																1	

AUDIO VISUAL SYSTEM (LOCATION A6 CONTINUED)

SHEET	ROOM	MIC ANT	MINI GBIC	MP-WP-183	SDI TO HDMI	TABLE BOX	TOUCH SCREEN	WALL PLATE	WAP	WIRELESS CONTROL	WIRELESS VIDEO RCVR	BODYPACK XMTR	OMNI LAVALIER
		EA	EA	EA	EA	EA	EA	EA	EA	EA	EA	EA	EA
E-11	201												
E-11	213	2	2	2	1	1	1		1	1	1	1	1
E-11	215	2	2	4	2		1		1	1	1	1	1
E-11	217						1	1					
E-11	220						1	1					
E-11	230												
E-11	247						1	1					

ELECTRICAL QUANTITIES

APPROVED FOR ELECTRICAL WORK ONLY

E-77

REVISED BY | DATE REVISED
JOSHUA MCNEILL | RANDY RATZLAFF
CALCULATED-DESIGNED BY | CHECKED BY
CONSULTANT FUNCTIONAL SUPERVISOR | STEVE HUFF
STATE OF CALIFORNIA - DEPARTMENT OF TRANSPORTATION
Caltrans

LAST REVISION 04-01-15 | DATE PLOTTED => 13-MAY-2015 TIME PLOTTED => 08:49

Dist	COUNTY	LOCATION	POST MILES TOTAL PROJECT	SHEET No.	TOTAL SHEETS
12	Ora	Var		79	91

REGISTERED CIVIL ENGINEER 2-25-15 DATE

May 04, 2015
PLANS APPROVAL DATE

REGISTERED PROFESSIONAL ENGINEER CARLOS ORTIZ No. 57535 Exp. 12-31-15 CIVIL STATE OF CALIFORNIA

THE STATE OF CALIFORNIA OR ITS OFFICERS OR AGENTS SHALL NOT BE RESPONSIBLE FOR THE ACCURACY OR COMPLETENESS OF SCANNED COPIES OF THIS PLAN SHEET.

RBF CONSULTING
14725 ALTON PKWY
IRVINE, CA 92618

NOTES:

1. ITEMS SHOWN IN TABLE(S) ARE NOT A SEPARATE PAY ITEM, FOR INFORMATION ONLY.

AUDIO VISUAL SYSTEM (LOCATION B1)

SHEET	ROOM	Exist DGE	Exist ETHERNET SWITCH	Exist VIDEO CODEC	TOUCH SCREEN
		EA	EA	EA	EA
E-12	UCI	1	1	1	1

ELECTRICAL QUANTITIES

APPROVED FOR ELECTRICAL WORK ONLY

E-78

STATE OF CALIFORNIA - DEPARTMENT OF TRANSPORTATION
Caltrans

CONSULTANT FUNCTIONAL SUPERVISOR: STEVE HUFF
CALCULATED-DESIGNED BY: JOSHUA MCNEILL
CHECKED BY: RANDY RATZLAFF
REVISED BY
DATE REVISED

LAST REVISION 04-01-15
DATE PLOTTED => 13-MAY-2015
TIME PLOTTED => 08:49

M

Maint	MAINTENANCE
Max	MAXIMUM
MB	METAL BEAM
MBB	METAL BEAM BARRIER
MBGR	METAL BEAM GUARD RAILING
Med	MEDIAN
MGS	MIDWEST GUARDRAIL SYSTEM
MH	MANHOLE
Min	MINIMUM
Misc	MISCELLANEOUS
Misc I & S	MISCELLANEOUS IRON AND STEEL
Mkr	MARKER
Mod	MODIFIED,
	MODIFY
Mon	MONUMENT
MP	METAL PLATE
MPGR	METAL PLATE GUARD RAILING
MR	MOVEMENT RATING
MSE	MECHANICALLY STABILIZED EMBANKMENT
Mt	MOUNTAIN, MOUNT
Mtl	MATERIAL
MVP	MAINTENANCE VEHICLE PULLOUT

N

N	NORTH
NB	NORTHBOUND
No.	NUMBER (MUST HAVE PERIOD)
Nos.	NUMBERS (MUST HAVE PERIOD)
NPS	NOMINAL PIPE SIZE
NS	NEAR SIDE
NSP	NEW STANDARD PLAN
NTS	NOT TO SCALE

O

Oblr	OBLITERATE
OC	OVERCROSSING
OD	OUTSIDE DIAMETER
OF	OUTSIDE FACE
OG	ORIGINAL GROUND
OGAC	OPEN GRADED ASPHALT CONCRETE
OGFC	OPEN GRADED FRICTION COURSE
OH	OVERHEAD
OHWM	ORDINARY HIGH WATER MARK
O-O	OUT TO OUT
Opp	OPPOSITE
OSD	OVERSIDE DRAIN

P

P	PAGE
PAP	PERFORATED ALUMINUM PIPE
PB	PULL BOX
PC	POINT OF CURVATURE,
	PRECAST
PCC	POINT OF COMPOUND CURVE,
	PORTLAND CEMENT CONCRETE
PCMS	PORTABLE CHANGEABLE MESSAGE SIGN
PCP	PERFORATED CONCRETE PIPE,
	PRESTRESSED CONCRETE PIPE
PCVC	POINT OF COMPOUND VERTICAL CURVE
PEC	PERMIT TO ENTER AND CONSTRUCT
Ped	PEDESTRIAN
Ped OC	PEDESTRIAN OVERCROSSING
Ped UC	PEDESTRIAN UNDERCROSSING
Perm Mtl	PERMEABLE MATERIAL

P continued

PG	PROFILE GRADE
PI	POINT OF INTERSECTION
PJP	PARTIAL JOINT PENETRATION
Pkwy	PARKWAY
ℙ,PL	PLATE
P/L	PROPERTY LINE
PM	POST MILE,
	TIME FROM NOON TO MIDNIGHT
PN	PAVING NOTCH
POC	POINT OF HORIZONTAL CURVE
POT	POINT OF TANGENT
POVC	POINT OF VERTICAL CURVE
PP	PIPE PILE,
	PLASTIC PIPE,
	POWER POLE
PPL	PREFORMED PERMEABLE LINER
PPP	PERFORATED PLASTIC PIPE
PRC	POINT OF REVERSE CURVE
PRF	PAVEMENT REINFORCING FABRIC
PRVC	POINT OF REVERSE VERTICAL CURVE
PS&E	PLANS, SPECIFICATIONS AND ESTIMATES
PS, P/S	PRESTRESSED
PSP	PERFORATED STEEL PIPE
PT	POINT OF TANGENCY
PVC	POLYVINYL CHLORIDE
Pvmt	PAVEMENT

Q

Qty	QUANTITY

R

R	RADIUS
R & D	REMOVE AND DISPOSE
R & S	REMOVE AND SALVAGE
R/C	RATE OF CHANGE
RCA	REINFORCED CONCRETE ARCH
RCB	REINFORCED CONCRETE BOX
RCP	REINFORCED CONCRETE PIPE
RCPA	REINFORCED CONCRETE PIPE ARCH
Rd	ROAD
Reinf	REINFORCED,
	REINFORCEMENT,
	REINFORCING
Rel	RELOCATE
Repl	REPLACEMENT
Ret	RETAINING
Rev	REVISED, REVISION
Rdwy	ROADWAY
RHMA	RUBBERIZED HOT MIX ASPHALT
Riv	RIVER
RM	ROAD-MIXED
RP	RADIUS POINT,
	REFERENCE POINT
RR	RAILROAD
RSP	ROCK SLOPE PROTECTION,
	REVISED STANDARD PLAN
Rt	RIGHT
Rte	ROUTE
RW	REDWOOD,
	RETAINING WALL
R/W	RIGHT OF WAY
Rwy	RAILWAY

S

S	SOUTH,
	SUPPLEMENT
SAE	STRUCTURE APPROACH EMBANKMENT
Salv	SALVAGE
SAPP	STRUCTURAL ALUMINUM PLATE PIPE
SB	SOUTHBOUND
SC	SAND CUSHION
SCSP	SLOTTED CORRUGATED STEEL PIPE
SD	STORM DRAIN
Sec	SECOND,
	SECTION
Sep	SEPARATION
SG	SUBGRADE
Shld	SHOULDER
Sht	SHEET
Sim	SIMILAR
₤	STATION LINE
SM	SELECTED MATERIAL
Spec	SPECIAL,
	SPECIFICATIONS
SPP	SLOTTED PLASTIC PIPE
SS	SLOPE STAKE
SSBM	STRAP AND SADDLE BRACKET METHOD
SSD	STRUCTURAL SECTION DRAIN
SSPA	STRUCTURAL STEEL PLATE ARCH
SSPP	STRUCTURAL STEEL PLATE PIPE
SSPPA	STRUCTURAL STEEL PLATE PIPE ARCH
SSRP	STEEL SPIRAL RIB PIPE
St	STREET
Sta	STATION
STBB	SINGLE THRIE BEAM BARRIER
Std	STANDARD
Str	STRUCTURE
Surf	SURFACING
SW	SIDEWALK,
	SOUND WALL
Swr	SEWER
Sym	SYMMETRICAL
S4S	SURFACE 4 SIDES

T

T	SEMI-TANGENT
Tan	TANGENT
TBB	THRIE BEAM BARRIER
Tbr	TIMBER
TC	TOP OF CURB
TCB	TRAFFIC CONTROL BOX
TCE	TEMPORARY CONSTRUCTION EASEMENT
Tel	TELEPHONE
Temp	TEMPORARY
TG	TOP OF GRADE
Tot	TOTAL
TP	TELEPHONE POLE
TPB	TREATED PERMEABLE BASE
TPM	TREATED PERMEABLE MATERIAL
Trans	TRANSITION

T continued

TS	TRANSVERSE,
	TRAFFIC SIGNAL,
	TUBULAR STEEL
Typ	TYPICAL

U

UC	UNDERCROSSING
UD	UNDERDRAIN
UG	UNDERGROUND
UON	UNLESS OTHERWISE NOTED
UP	UNDERPASS

V

V	VALVE,
	DESIGN SPEED
Var	VARIABLE,
	VARIES
VC	VERTICAL CURVE
VCP	VITRIFIED CLAY PIPE
Vert	VERTICAL
Via	VIADUCT
Vol	VOLUME

W

W	WEST,
	WIDTH
WB	WESTBOUND
WH	WEEP HOLE
WM	WIRE MESH
WS	WATER SURFACE
WSP	WELDED STEEL PIPE
Wt	WEIGHT
WV	WATER VALVE
WW	WINGWALL
WWLOL	WINGWALL LAYOUT LINE

X

X Sec	CROSS SECTION
Xing	CROSSING

Y

Yr	YEAR
Yrs	YEARS

Dist	COUNTY	ROUTE	POST MILES TOTAL PROJECT	SHEET No.	TOTAL SHEETS
12	Ora	Var	Var	80	91

Grace M. Tsushima
REGISTERED CIVIL ENGINEER

July 19, 2013
PLANS APPROVAL DATE

REGISTERED PROFESSIONAL ENGINEER
Grace M. Tsushima
No. C49814
Exp. 9-30-14
CIVIL
STATE OF CALIFORNIA

THE STATE OF CALIFORNIA OR ITS OFFICERS OR AGENTS SHALL NOT BE RESPONSIBLE FOR THE ACCURACY OR COMPLETENESS OF SCANNED COPIES OF THIS PLAN SHEET.

TO ACCOMPANY PLANS DATED May 04, 2015

UNIT OF MEASUREMENT SYMBOLS:

Some of the symbols used in the project plan quantity tables and in the Bid Item List are:

TABLE A

SYMBOL USED	DEFINITIONS
ACRE	ACRE
CF	CUBIC FOOT
CY	CUBIC YARD
EA	EACH
GAL	GALLON
LB	POUND
LF	LINEAR FOOT
SQFT	SQUARE FOOT
SQYD	SQUARE YARD
STA	100 FEET
TAB	TABLET
TON	2,000 POUNDS

Some of the symbols used in the plans other than in the project plan quantity tables are:

TABLE B

SYMBOL USED	DEFINITIONS
ksi	KIPS PER SQUARE INCH
ksf	KIPS PER SQUARE FOOT
psi	POUNDS PER SQUARE INCH
psf	POUNDS PER SQUARE FOOT
lb/ft^3, pcf	POUNDS PER CUBIC FOOT
tsf	TONS PER SQUARE FOOT
mph, MPH *	MILES PER HOUR
ø	NOMINAL DIAMETER
oz	OUNCE
lb	POUND
kip	1,000 POUNDS
cal	CALORIE
ft	FOOT OR FEET
gal	GALLON

* For use on a sign panel only

STATE OF CALIFORNIA
DEPARTMENT OF TRANSPORTATION

ABBREVIATIONS (SHEET 2 OF 2)

NO SCALE

RSP A10B DATED JULY 19, 2013 SUPERSEDES STANDARD PLAN A10B DATED MAY 20, 2011 - PAGE 2 OF THE STANDARD PLANS BOOK DATED 2010.

REVISED STANDARD PLAN RSP A10B

2010 REVISED STANDARD PLAN RSP A10B

6-7-13

Dist	COUNTY	ROUTE	POST MILES TOTAL PROJECT	SHEET No.	TOTAL SHEETS
12	Ora	Var	Var	81	91

Theresa Gabriel
REGISTERED ELECTRICAL ENGINEER

October 30, 2015
PLANS APPROVAL DATE

REGISTERED PROFESSIONAL ENGINEER
Theresa Aziz Gabriel
No. E15129
Exp. 6-30-16
ELECTRICAL
STATE OF CALIFORNIA

THE STATE OF CALIFORNIA OR ITS OFFICERS OR AGENTS SHALL NOT BE RESPONSIBLE FOR THE ACCURACY OR COMPLETENESS OF SCANNED COPIES OF THIS PLAN SHEET.

TO ACCOMPANY PLANS DATED May 04, 2015

LEGEND:

- AB — ABANDON. IF APPLIED TO CONDUIT, REMOVE CONDUCTORS
- BC — INSTALL PULL BOX IN EXISTING CONDUIT RUN
- BP — PEDESTRIAN BARRICADE, TYPE AS INDICATED ON PLAN
- CB — INSTALL CONDUIT INTO EXISTING PULL BOX
- CC — CONNECT NEW AND EXISTING CONDUIT. REMOVE EXISTING CONDUCTORS AND INSTALL CONDUCTORS AS INDICATED
- CF — CONDUIT TO REMAIN FOR FUTURE USE. REMOVE CONDUCTORS. INSTALL PULL TAPE
- DH — DETECTOR HANDHOLE
- FA — FOUNDATION TO BE ABANDONED
- IS — INSTALL SIGN ON SIGNAL MAST ARM
- NS — NO SLIP BASE ON STANDARD
- PEC — PHOTOELECTRIC CONTROL
- PEU — PHOTOELECTRIC UNIT
- RC — EQUIPMENT OR MATERIAL TO BE REMOVED AND BECOME THE PROPERTY OF THE CONTRACTOR
- RE — REMOVE ELECTROLIER, FUSES AND BALLAST. TAPE ENDS OF CONDUCTORS
- RL — RELOCATE EQUIPMENT
- RR — REMOVE AND REUSE EQUIPMENT
- RS — REMOVE AND SALVAGE EQUIPMENT
- SC — SPLICE NEW TO EXISTING CONDUCTORS
- SD — SERVICE DISCONNECT
- TSP — TELEPHONE SERVICE POINT

ABBREVIATIONS

AC+	UNDERGROUNDED CONDUCTOR
APS	ACCESSIBLE PEDESTRIAN SIGNAL
Batt	BATTERY
BBS	BATTERY BACKUP SYSTEM
BC	BOLT CIRCLE
Blk	BLACK
BP	BYPASS
BPB	BICYCLE PUSH BUTTON
C	CONDUIT
CB	CIRCUIT BREAKER
CCTV	CLOSED CIRCUIT TELEVISION
Ckt	CIRCUIT
CMS	CHANGEABLE MESSAGE SIGN
Ctid	CALTRANS IDENTIFICATION
Comm	COMMUNICATION
Cntl	CONTROL
DF	DEPARTMENT-FURNISHED
DLC	LOOP DETECTOR LEAD-IN CABLE
EMS	EXTINGUISHABLE MESSAGE SIGN
EVUC	EMERGENCY VEHICLE UNIT CABLE
EVUD	EMERGENCY VEHICLE UNIT DETECTOR
FB	FLASHING BEACON
FBCA	FLASHING BEACON CONTROL ASSEMBLY
FBS	FLASHING BEACON WITH SLIP BASE
FO	FIBER OPTIC
G	EQUIPMENT GROUNDING CONDUCTOR
GB	GROUND BUS
GFCI	GROUND FAULT CIRCUIT INTERRUPTER
Grn	GREEN
HAR	HIGHWAY ADVISORY RADIO
Hex	HEXAGONAL
HPS	HIGH PRESSURE SODIUM
IISNS	INTERNALLY ILLUMINATED STREET NAME SIGN
ISL	INDUCTION SIGN LIGHTING
LED	LIGHT EMITTING DIODE
LMA	LUMINAIRE MAST ARM
LPS	LOW PRESSURE SODIUM
Ltg	LIGHTING
Lum	LUMINAIRE
M	METERED
MAT	MAST ARM MOUNTING TOP ATTACHMENT
MAS	MAST ARM MOUNTING SIDE ATTACHMENT
MBPS	MANUAL BYPASS SWITCH
M/M	MULTIPLE TO MULTIPLE TRANSFORMER
Mtg	MOUNTING
MV	MERCURY VAPOR LIGHTING FIXTURE
MVDS	MICROWAVE VEHICLE DETECTION SYSTEM
N	NEUTRAL (GROUNDED CONDUCTOR)
NB	NEUTRAL BUS
NC	NORMALLY CLOSE
NO	NORMALLY OPEN
P	CIRCUIT BREAKER'S POLE
PB	PULL BOX
PBA	PUSH BUTTON ASSEMBLY
PEC	PHOTOELECTRIC CONTROL
Ped	PEDESTRIAN
PEU	PHOTOELECTRIC UNIT
PT	CONDUIT WITH PULL TAPE
PTR	POWER TRANSFER RELAY
RE	RELOCATED EQUIPMENT
RM	RAMP METERING
RWIS	ROADSIDE WEATHER INFORMATION SYSTEM
SB	SLIP BASE
SIC	SIGNAL INTERCONNECT CABLE
Sig	SIGNAL
SMA	SIGNAL MAST ARM
SNS	STREET NAME SIGN
SP	SERVICE POINT
TB	TERMINAL BOARD
TDC	TELEPHONE DEMARCATION CABINET
Temp	TEMPERATURE
TMS	TRAFFIC MONITORING STATION
TOS	TRAFFIC OPERATIONS SYSTEM
UPS	UNINTERRUPTABLE POWER SUPPLY
UPSC	UNINTERRUPTABLE POWER SUPPLY CONTROLLER
Veh	VEHICLE
VIVDS	VIDEO IMAGE VEHICLE DETECTION SYSTEM
Wht	WHITE
WIM	WEIGH-IN-MOTION
Xfmr	TRANSFORMER

SOFFIT AND WALL-MOUNTED LUMINAIRES

- PENDANT SOFFIT LUMINAIRE, 70 W HPS UNLESS OTHERWISE SPECIFIED
- FLUSH-MOUNTED SOFFIT LUMINAIRE, 70 W HPS UNLESS OTHERWISE SPECIFIED
- WALL-MOUNTED LUMINAIRE, 70 W HPS UNLESS OTHERWISE SPECIFIED
- EXISTING SOFFIT OR WALL-MOUNTED LUMINAIRE TO REMAIN UNMODIFIED
- EXISTING SOFFIT OR WALL-MOUNTED LUMINAIRE TO BE MODIFIED AS SPECIFIED

NOTE:
Arrow indicates "street side" of luminaire.

COMMONLY USED SYMBOLS FOR UNITED STATES CUSTOMARY UNITS OF MEASUREMENT:

SYMBOL	DEFINITIONS
Ω	OHMS
min	MINUTE
s	SECOND
bps	BITS PER SECOND
Bps	BYTES PER SECOND
A	AMPERE
V	VOLT
V(dc)	VOLT (DIRECT CURRENT)
V(ac)	VOLT (ALTERNATING CURRENT)
FC	FOOT - CANDLE
W	WATTS
VA	VOLT-AMPERE
M	MEGA
k	KILO
m	MILLI
μ	MICRO
P	PICO
Hz	HERTZ

MISCELLANEOUS ELECTROLIERS

NEW	EXISTING	
		LUMINAIRE ON WOOD POLE
		NON-STANDARD ELECTROLIER (SEE PROJECT LEGEND)
		CITY ELECTROLIER
		ELECTROLIER FOUNDATION (FUTURE INSTALLATION)

NOTES:

1. LED luminaires shall be 235 W when installed on Type 21, 21D, 30, 31 and 32 Standards, unless otherwise specified. LED luminaires shall be 165 W when installed on other type standards or poles, unless otherwise specified.
2. Luminaires shall be the cutoff type, ANSI Type III medium cutoff lighting distribution, unless otherwise specified.

STANDARD ELECTROLIER

NEW	EXISTING	STANDARD TYPE
		15
		15D
		15 STRUCTURE
		15D STRUCTURE
		21
		21D
		21 STRUCTURE
		21D STRUCTURE
		30
		31
		32

STATE OF CALIFORNIA
DEPARTMENT OF TRANSPORTATION

ELECTRICAL SYSTEMS (LEGEND AND ABBREVIATIONS)

NO SCALE

RSP ES-1A DATED OCTOBER 30, 2015 SUPERSEDES RSP ES-1A DATED JULY 19, 2013 AND STANDARD PLAN ES-1A DATED MAY 20, 2011 - PAGE 425 OF THE STANDARD PLANS BOOK DATED 2010.

REVISED STANDARD PLAN RSP ES-1A

2010 REVISED STANDARD PLAN RSP ES-1A

9-29-15

Dist	COUNTY	ROUTE	POST MILES TOTAL PROJECT	SHEET No.	TOTAL SHEETS
12	Ora	Var	Var	82	91

Theresa Gabriel
REGISTERED ELECTRICAL ENGINEER

October 30, 2015
PLANS APPROVAL DATE

REGISTERED PROFESSIONAL ENGINEER Theresa Aziz Gabriel No. E15129 Exp. 6-30-16 ELECTRICAL STATE OF CALIFORNIA

THE STATE OF CALIFORNIA OR ITS OFFICERS OR AGENTS SHALL NOT BE RESPONSIBLE FOR THE ACCURACY OR COMPLETENESS OF SCANNED COPIES OF THIS PLAN SHEET.

TO ACCOMPANY PLANS DATED May 04, 2015

CONDUIT

NEW	EXISTING	
		LIGHTING CONDUIT, UNLESS OTHERWISE INDICATED OR NOTED
		TRAFFIC SIGNAL CONDUIT
C	c	COMMUNICATION CONDUIT
T	t	TELEPHONE CONDUIT
F	f	FIRE ALARM CONDUIT
FO	fo	FIBER OPTIC CONDUIT
		CONDUIT TERMINATION
R	r	CONDUIT RISER ATTACHED TO THE STRUCTURE OR SERVICE POLE

SERVICE EQUIPMENT

NEW	EXISTING	
OH	oh	OVERHEAD LINES
U	U	WOOD POLE, "U" INDICATES UTILITY OWNED
		POLE GUY WITH ANCHOR
		UTILITY TRANSFORMER - GROUND MOUNTED
III	III	SERVICE EQUIPMENT ENCLOSURE TYPE. DOOR INDICATES FRONT OF ENCLOSURE
T	t	TELEPHONE DEMARCATION CABINET

POLE-MOUNTED SERVICE DESIGNATION

TYPE H SERVICE, 28'-10" — TYPE OF INSTALLATION AND POLE HEIGHT ABOVE GRADE

FLASHING BEACON

NEW	EXISTING	
R	R	FLASHING BEACON (ONE VEHICLE SIGNAL HEAD WITH BACKPLATE AND VISOR) "R" INDICATES RED INDICATION, "Y" INDICATES YELLOW INDICATION
Y Y	Y Y	FLASHING BEACON WITH TYPE 15-FBS STANDARD AND A SIGN.
R R	R R	FLASHING BEACON WITH TYPES 9, 9A OR 9B SIGN UNLESS OTHERWISE SPECIFIED OR INDICATED

SIGNAL EQUIPMENT

NEW	EXISTING	
		PEDESTRIAN SIGNAL HEAD
		PUSH BUTTON ASSEMBLY POST
		PEDESTRIAN BARRICADE
		VEHICLE SIGNAL HEAD (WITH BACKPLATE AND 3-SECTIONS: RED, YELLOW AND GREEN)
		VEHICLE SIGNAL HEAD WITH ANGLE VISOR
PV	PV	MODIFICATIONS OF BASIC SYMBOL: "L" INDICATES ALL NON-ARROW SECTIONS LOUVERED "LG" INDICATES LOUVERED GREEN SECTION ONLY "PV" INDICATES ALL 12" SECTIONS PROGRAMMED VISIBILITY "8" INDICATES ALL 8" SECTIONS (ONLY WHEN SPECIFIED)
		VEHICLE SIGNAL HEAD CONSISTING OF RED, YELLOW AND GREEN LEFT ARROW SECTIONS
		VEHICLE SIGNAL HEAD CONSISTING OF RED AND YELLOW SECTIONS WITH AN UP GREEN ARROW SECTION
		VEHICLE SIGNAL HEAD (5 SECTION) CONSISTING OF RED, YELLOW AND GREEN SECTIONS WITH YELLOW AND GREEN RIGHT ARROW SECTIONS
		TYPE 15TS STANDARD WITH VEHICLE SIGNAL HEAD AND LUMINAIRE
		TYPE 21TS STANDARD WITH VEHICLE SIGNAL HEAD AND LUMINAIRE
		STANDARD WITH LUMINAIRE AND SIGNAL MAST ARMS AND ATTACHED VEHICLE SIGNAL HEADS
		TYPE 1 STANDARD WITH ATTACHED VEHICLE SIGNAL HEADS
		STANDARD WITH A SIGNAL MAST ARM, ATTACHED VEHICLE SIGNAL HEADS AND INTERNALLY ILLUMINATED STREET NAME SIGN
		CONTROLLER ASSEMBLY. DOOR INDICATES FRONT OF CABINET

SIGNAL EQUIPMENT Cont

NEW	EXISTING	
		GUARD POST
		TYPE 1 STANDARD WITH RAMP METERING SIGN
		OPTICAL DETECTOR FOR THE EMERGENCY VEHICLE DETECTION

NOTES:

1. All signal sections shall be 12" unless shown otherwise.
2. Signal heads shall be provided with backplates unless shown otherwise.

ILLUMINATED OVERHEAD SIGN

NEW	EXISTING	
		SINGLE POST, SINGLE ILLUMINATED SIGN, BALANCED BUTTERFLY
		SINGLE POST, DOUBLE ILLUMINATED SIGN, BALANCED BUTTERFLY
		SINGLE POST, SINGLE ILLUMINATED SIGN, FULL CANTILEVER
		DOUBLE POST, SINGLE ILLUMINATED SIGN
		SINGLE ILLUMINATED SIGN MOUNTED ON STRUCTURE
		DOUBLE POST, SINGLE ILLUMINATED SIGN WITH ELECTROLIER

STATE OF CALIFORNIA
DEPARTMENT OF TRANSPORTATION

ELECTRICAL SYSTEMS (LEGEND AND ABBREVIATIONS)

NO SCALE

RSP ES-1B DATED OCTOBER 30, 2015 SUPERSEDES RSP ES-1B DATED JULY 19, 2013 AND STANDARD PLAN ES-1B DATED MAY 20, 2011 - PAGE 426 OF THE STANDARD PLANS BOOK DATED 2010.

REVISED STANDARD PLAN RSP ES-1B

2010 REVISED STANDARD PLAN RSP ES-1B

8-19-15

Dist	COUNTY	ROUTE	POST MILES TOTAL PROJECT	SHEET No.	TOTAL SHEETS
12	Ora	Var	Var	83	91

Theresa Gabriel
REGISTERED ELECTRICAL ENGINEER

October 30, 2015
PLANS APPROVAL DATE

REGISTERED PROFESSIONAL ENGINEER
Theresa Aziz Gabriel
No. E15129
Exp. 6-30-16
ELECTRICAL
STATE OF CALIFORNIA

THE STATE OF CALIFORNIA OR ITS OFFICERS OR AGENTS SHALL NOT BE RESPONSIBLE FOR THE ACCURACY OR COMPLETENESS OF SCANNED COPIES OF THIS PLAN SHEET.

TO ACCOMPANY PLANS DATED **May 04, 2015**

EQUIPMENT IDENTIFICATION

ILLUMINATED SIGN IDENTIFICATION NUMBER:

SIGN No. 12345

10 ISL SCI 1.0

- SIGN NUMBER - PLACE ON POST OR STRUCTURE
- TRANSFORMER RATING (kVA)
- LIGHTING CONTROL TYPE
- NUMBER AND TYPE OF FIXTURES

} DO NOT PLACE ON STANDARD OR STRUCTURE

ELECTROLIER OR EQUIPMENT IDENTIFICATION NUMBER:

12345 - 15'-0"

- MAST ARM LENGTH, IF SHOWN. DO NOT PLACE ON STANDARD OR STRUCTURE
- EQUIPMENT NUMBER - PLACE ON STANDARD OR STRUCTURE. EXISTING EQUIPMENT NUMBERS ARE SHOWN IN PARENTHESIS

CONDUIT AND CONDUCTOR IDENTIFICATION:

1½"C, 2#10, 15#14, 2 DLC, 12P#18 (PAIR)

- NUMBER AND SIZE OF CONDUCTORS AND CABLES
- SIZE OF CONDUIT IN INCHES

ø1, ø2, ø2P, etc.	TRAFFIC PHASE IDENTIFICATION FOR SIGNALS, DETECTORS AND PHASE DIAGRAMS
1 2 3	LEGEND NUMBERS
A B C	EQUIPMENT, SIGNAL POLES, INSTALLATION OR ITEMS
1 2 3	CONDUIT RUN NUMBERS

SIGNAL AND LIGHTING STANDARD (TYPICAL DESIGNATION):

19A - 3 - 100

- WIND VELOCITY = 100 mph
- CASE 3 ARM LOADING
- STANDARD TYPE
- STANDARD PLAN SHEET NUMBER
- DETAIL, NUMBER, SECTION, TYPE OR ELEVATION

MISCELLANEOUS EQUIPMENT

NEW	EXISTING	
CMS	cms	CHANGEABLE MESSAGE SIGN
		CLOSED CIRCUIT TELEVISION CAMERA
		HIGHWAY ADVISORY RADIO POLE AND ANTENNA
EMS	ems	LED EXTINGUISHABLE MESSAGE SIGN
M V	m v	DETECTION DEVICE M = MICROWAVE SENSOR V = VIDEO IMAGE SENSOR

WIRING DIAGRAM LEGEND

- EXTERNAL CONDUCTOR
- CONDUCTOR OR BUS
- TIE POINT
- CONTACTOR COIL
- CONTACTOR, NO CONTACT
- TERMINAL BLOCKS
- CONTACTOR, NC CONTACT
- ENCLOSURE BOND
- GROUNDING ELECTRODE
- CIRCUIT BREAKER
- RECEPTACLE

PULL BOXES

NEW	EXISTING	
		PULL BOX, No. 5 UNLESS OTHERWISE INDICATED OR NOTED
3	9A(21)	PULL BOX, ADDITIONAL DESIGNATIONS OR DESCRIPTIONS

3 No. 3½ PULL BOX
5 No. 5 PULL BOX
6 No. 6 PULL BOX
7 No. 7 (CEILING PULL BOX)
8 No. 8 (PENDANT SOFFIT PULL BOX)
9 No. 9 PULL BOX
9A No. 9A PULL BOX

(C) COMMUNICATIONS PULL BOX
(E) PULL BOX WITH EXTENSION
(S) SPRINKLER CONTROL PULL BOX
(21) ANCHOR BOLTS AND CONDUIT FOR FUTURE INSTALLATION OF TYPE 21 STANDARD
(T) TRAFFIC PULL BOX

VEHICLE DETECTORS

5 J 9 U

- VEHICLE DETECTOR DESIGNATION
- U = UPPER
  L = LOWER
- SLOT NUMBER IN INPUT FILE
- INPUT FILE (I OR J)
- PHASE

NEW	EXISTING	
		TYPE A LOOP DETECTOR. OUTLINE OF SAWCUT SHOWN
		TYPE B LOOP DETECTOR. OUTLINE OF SAWCUT SHOWN
		TYPE C LOOP DETECTOR. OUTLINE OF SAWCUT SHOWN
		TYPE D LOOP DETECTOR. OUTLINE OF SAWCUT SHOWN
		TYPE E LOOP DETECTOR. OUTLINE OF SAWCUT SHOWN
		TYPE Q LOOP DETECTOR. OUTLINE OF SAWCUT SHOWN
DH	dh	DETECTOR HANDHOLE
		MICROWAVE OR VIDEO DETECTION ZONE

STATE OF CALIFORNIA
DEPARTMENT OF TRANSPORTATION

ELECTRICAL SYSTEMS (LEGEND AND ABBREVIATIONS)

NO SCALE

RSP ES-1C DATED OCTOBER 30, 2015 SUPERSEDES RSP ES-1C DATED JULY 19, 2013 AND STANDARD PLAN ES-1C DATED MAY 20, 2011 - PAGE 427 OF THE STANDARD PLANS BOOK DATED 2010.

REVISED STANDARD PLAN RSP ES-1C

2010 REVISED STANDARD PLAN RSP ES-1C

8-19-15

DIST	COUNTY	ROUTE	POST MILES TOTAL PROJECT	SHEET No	TOTAL SHEETS
12	Ora	Var		84	91

Subhashini M. Sheikh 2-25-15
REGISTERED CIVIL ENGINEER DATE

May 04, 2015
PLANS APPROVAL DATE

REGISTERED PROFESSIONAL ENGINEER S. M. Sheikh No. 32677 Exp. 12/31/15 CIVIL STATE OF CALIFORNIA

The State of California or its officers or agents shall not be responsible for the accuracy or completeness of scanned copies of this plan sheet.

RBF CONSULTING
14725 ALTON PKWY
IRVINE, CA 92618

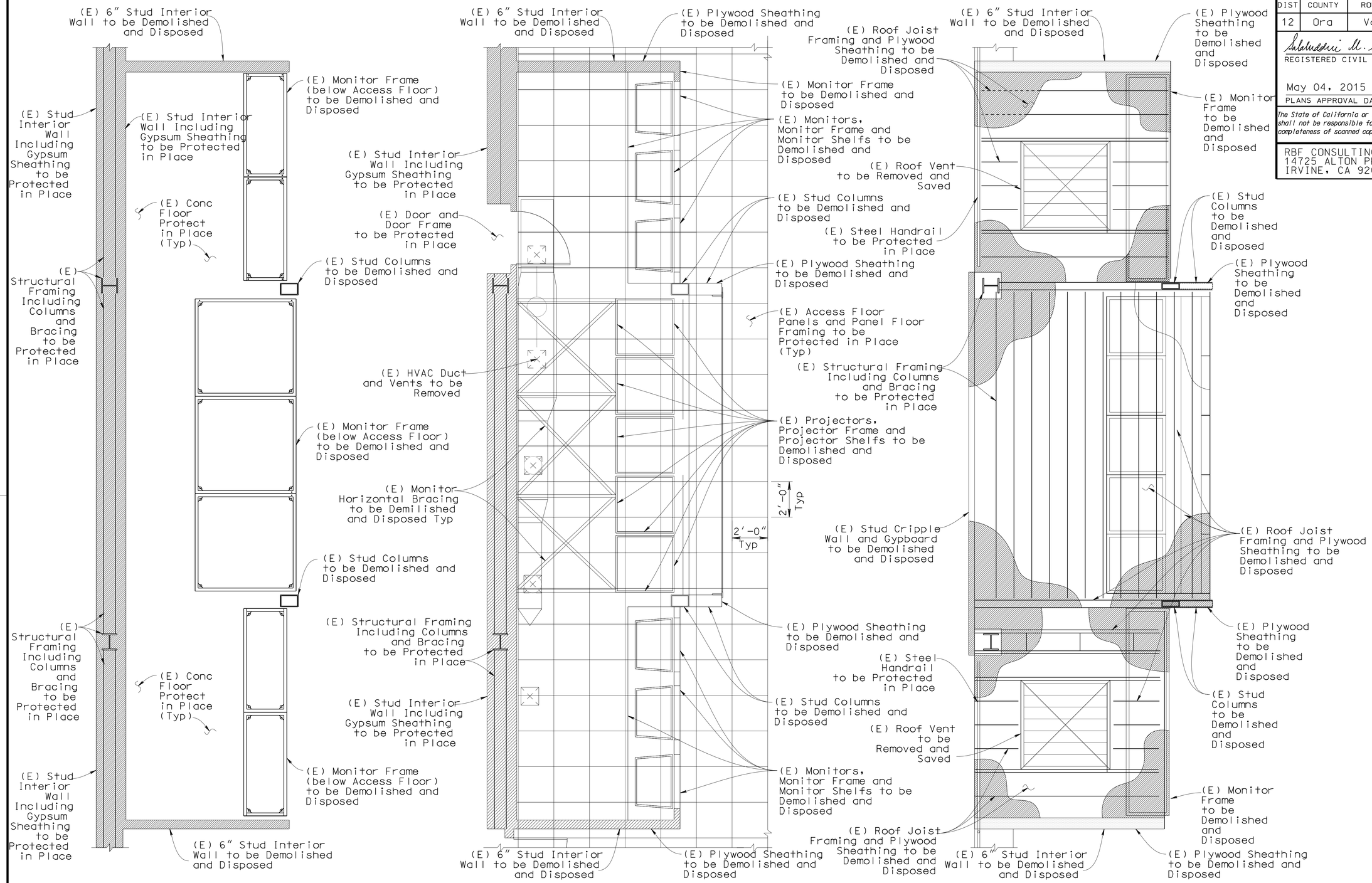

DEMO PLAN @ FIRST FLOOR LEVEL
3/8" = 1'-0"

DEMO PLAN AT ACCESS FLOOR LEVEL
3/8" = 1'-0"

DEMO PLAN @ SECOND FLOOR FRAMING LEVEL
3/8" = 1'-0"

S-1

Abdol Gharavi
DESIGN OVERSIGHT ABDOL GHARAVI
2-25-15
SIGN OFF DATE

	BY	CHECKED
DESIGN	F. Sanchez	C.Stelea
DETAILS	C. Stelea	F. Sanchez
QUANTITIES	F. Sanchez	C. Stelea

PREPARED FOR THE
STATE OF CALIFORNIA
DEPARTMENT OF TRANSPORTATION

S. M. SHEIKH
PROJECT ENGINEER

BRIDGE NO.
POST MILES

MONITOR WALL FRAME
DEMOLITION PLANS

DESIGN DETAIL SHEET (ENGLISH) (REV. 03/14/12)

ORIGINAL SCALE IN INCHES FOR REDUCED PLANS 0 1 2 3

UNIT: 3021
PROJECT NUMBER & PHASE: 12130001821 CONTRACT NO.: 12-0N2204

DISREGARD PRINTS BEARING EARLIER REVISION DATES

REVISION DATES

SHEET 84 OF 91

FILE -) 4298- S001.dgn

USERNAME -Gibson.Phd DATE PLOTTED -) 15-MAY-2015 TIME PLOTTED -) 10:39

DIST	COUNTY	ROUTE	POST MILES TOTAL PROJECT	SHEET No	TOTAL SHEETS
12	Ora	Var		85	91

Subhashini M. Sheikh 2-25-15
REGISTERED CIVIL ENGINEER DATE

May 04, 2015
PLANS APPROVAL DATE

REGISTERED PROFESSIONAL ENGINEER S. M. Sheikh No. 32677 Exp. 12/31/15 CIVIL STATE OF CALIFORNIA

The State of California or its officers or agents shall not be responsible for the accuracy or completeness of scanned copies of this plan sheet.

RBF CONSULTING
14725 ALTON PKWY
IRVINE, CA 92618

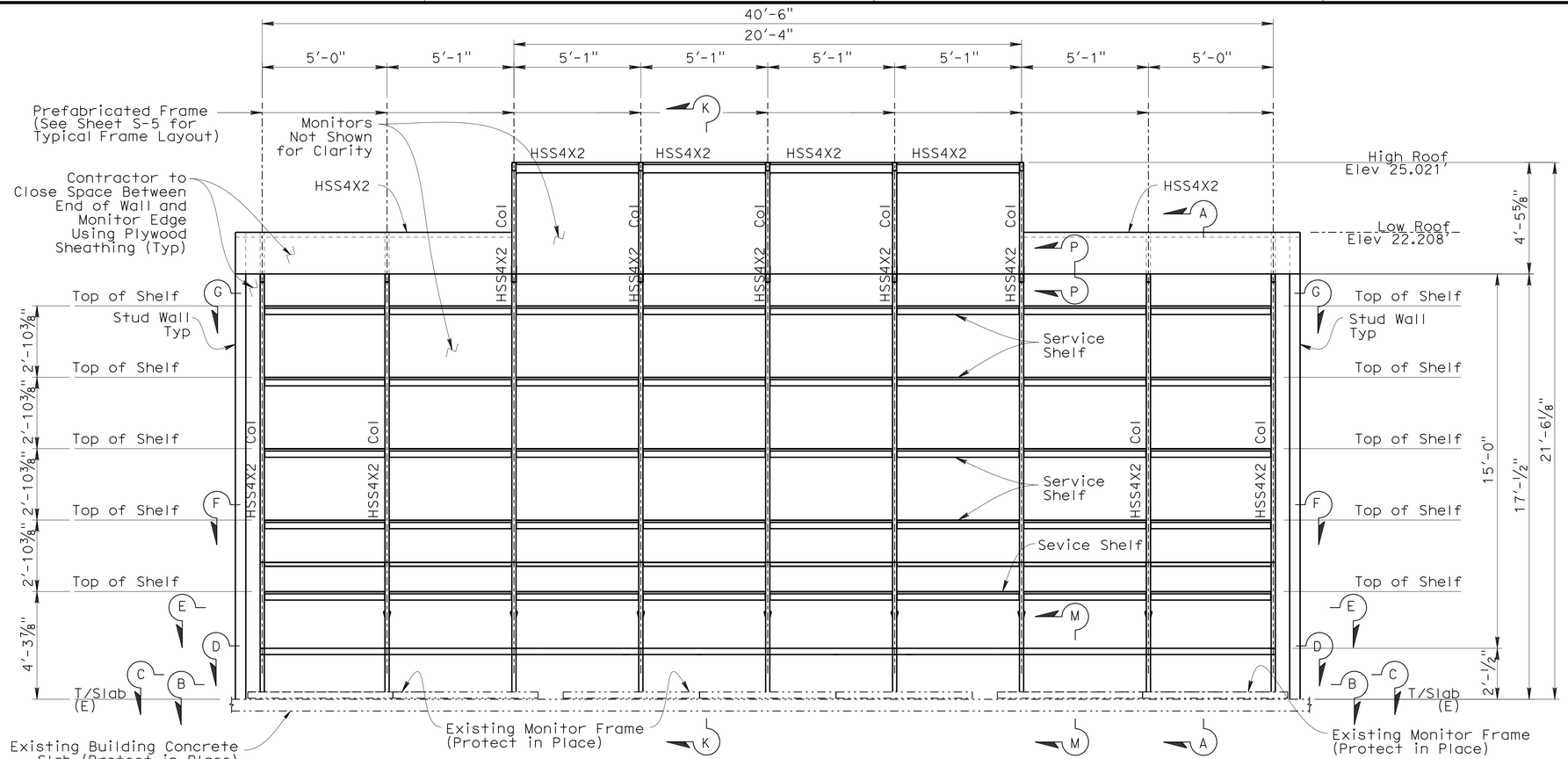

MONITOR FRAME - FRONT ELEVATION

3/8" = 1'-0"

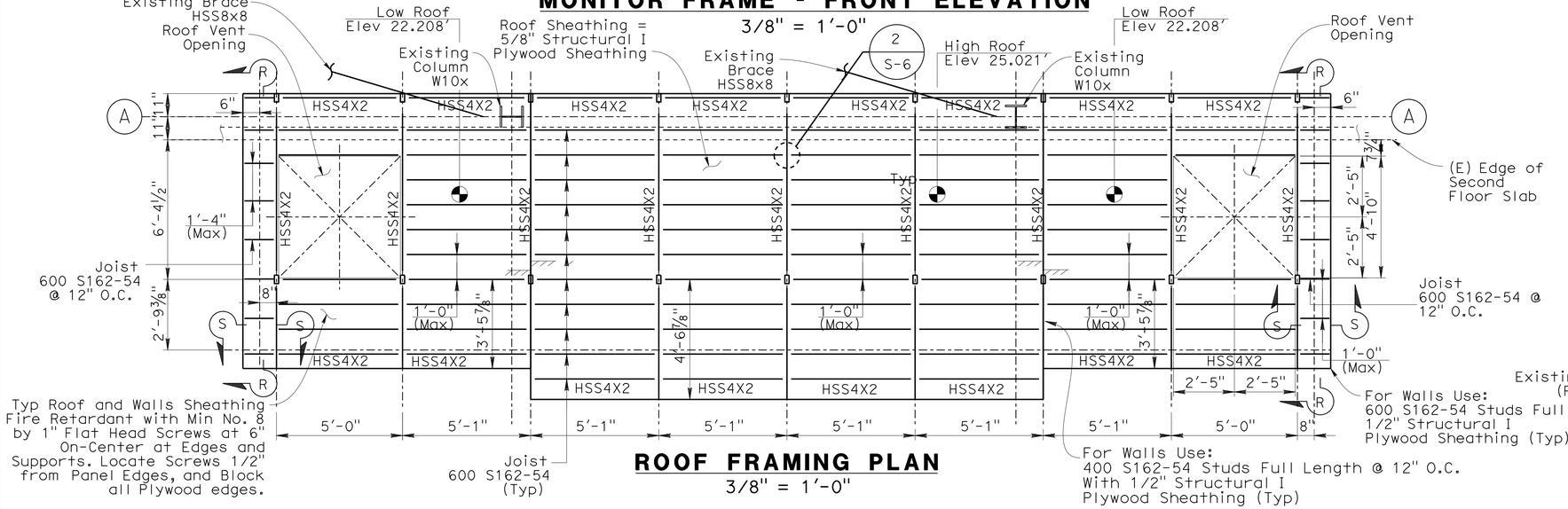

ROOF FRAMING PLAN

3/8" = 1'-0"

NOTES:

1. Contractor Shall Verify/Coordinate All Controlling Dimensions with Monitor Shop Drawings Prior to Ordering or Fabricating any Materials.
2. HSS Sections Cold Formed Steel ASTM A500, Gr 33.
3. Joists and Studs Cold Formed Steel.
   Joists ASTM A1003, Gr ST50H
   Studs ASTM A1003, Gr ST33H
4. All Steel and Wood shall be painted black.

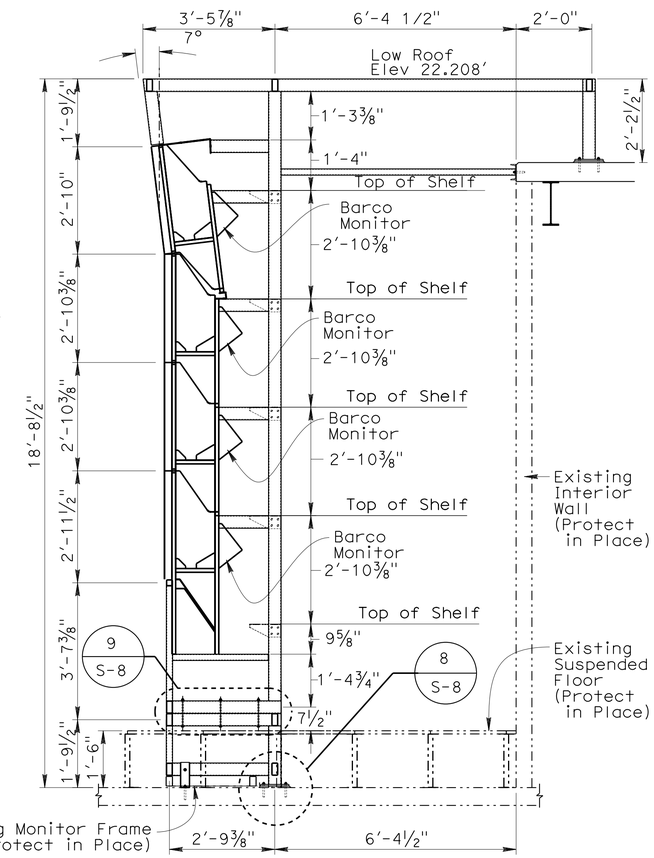

CROSS SECTION "A"

1/2" = 1'-0"

S-2

DESIGN	BY F. Sanchez	CHECKED C.Stelea	
DETAILS	BY C. Stelea	CHECKED F. Sanchez	
QUANTITIES	BY F. Sanchez	CHECKED C. Stelea	

Abdol Gharavi
DESIGN OVERSIGHT ABDOL GHARAVI
2-25-15
SIGN OFF DATE

PREPARED FOR THE STATE OF CALIFORNIA DEPARTMENT OF TRANSPORTATION

S. M. SHEIKH
PROJECT ENGINEER

BRIDGE NO.
POST MILES

MONITOR WALL FRAME
FRAMING ELEVATION & SECTIONS

DESIGN DETAIL SHEET (ENGLISH) (REV. 03/14/12)

ORIGINAL SCALE IN INCHES FOR REDUCED PLANS 0 1 2 3

UNIT: 3021
PROJECT NUMBER & PHASE: 12130001821 CONTRACT NO.: 12-0N2204

DISREGARD PRINTS BEARING EARLIER REVISION DATES

REVISION DATES

SHEET 85 OF 91

FILE => 4298- S002.dgn

USERNAME => jmcnellil DATE PLOTTED => 10-JUN-2015 TIME PLOTTED => 11:10

DIST	COUNTY	ROUTE	POST MILES TOTAL PROJECT	SHEET No	TOTAL SHEETS
12	Ora	Var		86	91

REGISTERED CIVIL ENGINEER — DATE 2-25-15

May 04, 2015
PLANS APPROVAL DATE

REGISTERED PROFESSIONAL ENGINEER — S. M. Sheikh — No. 32677 — Exp. 12/31/15 — CIVIL — STATE OF CALIFORNIA

The State of California or its officers or agents shall not be responsible for the accuracy or completeness of scanned copies of this plan sheet.

RBF CONSULTING
14725 ALTON PKWY
IRVINE, CA 92618

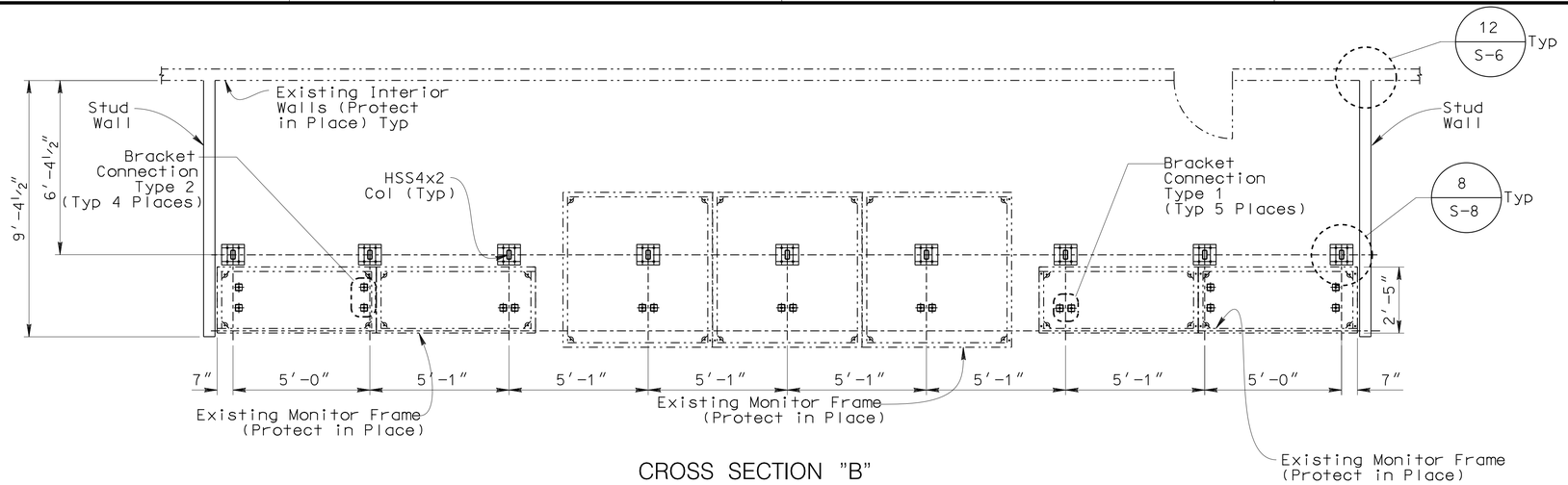

CROSS SECTION "B"
3/8" = 1'-0"

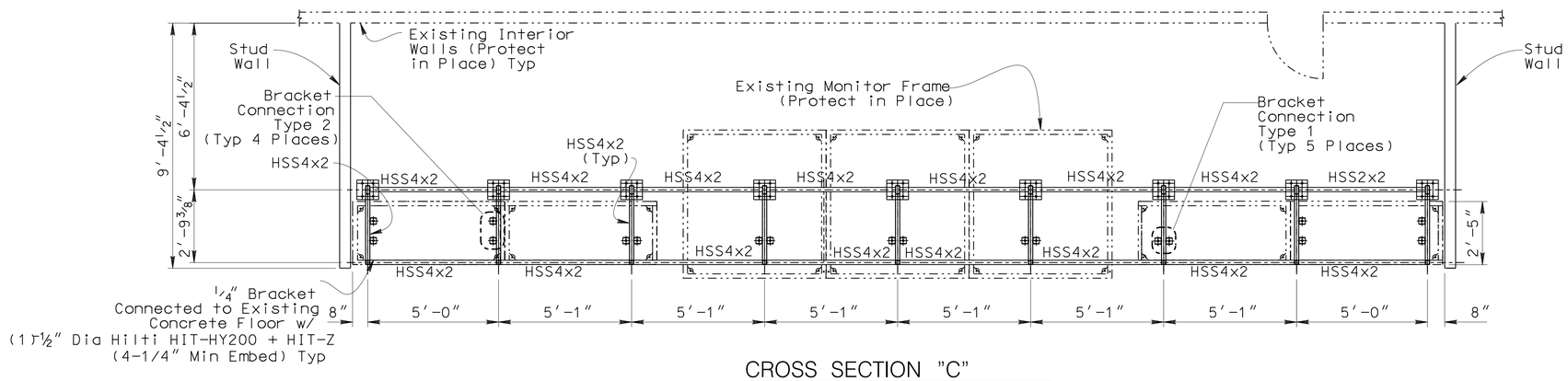

CROSS SECTION "C"
3/8" = 1'-0"

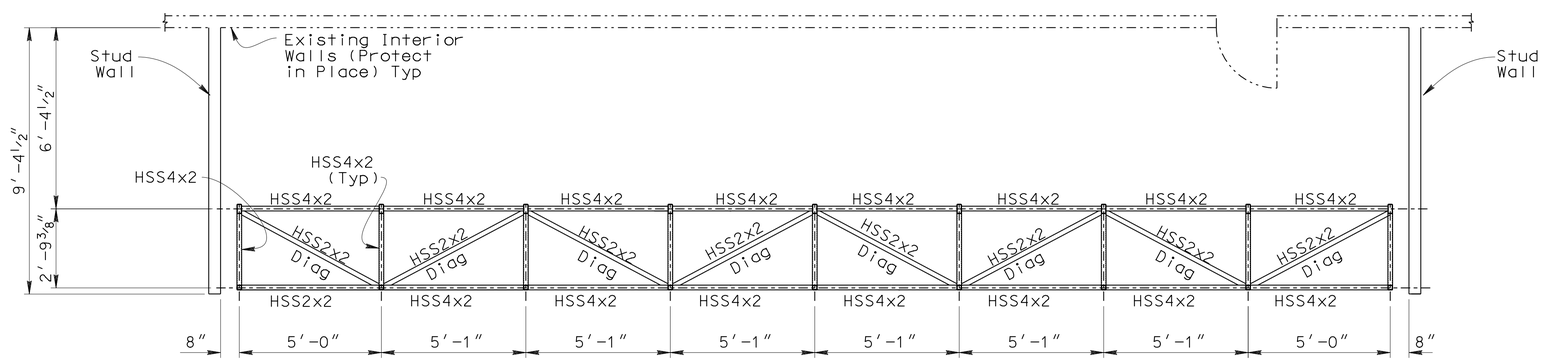

CROSS SECTION "D"
3/8" = 1'-0"

NOTE:
For Bracket Connection Details see Sheet S-5.

S-3

DESIGN OVERSIGHT — ABDOL GHARAVI	DESIGN	BY F. Sanchez	CHECKED C.Stelea
2-25-15	DETAILS	BY C. Stelea	CHECKED F. Sanchez
SIGN OFF DATE	QUANTITIES	BY F. Sanchez	CHECKED C. Stelea

PREPARED FOR THE STATE OF CALIFORNIA
DEPARTMENT OF TRANSPORTATION

S. M. SHEIKH
PROJECT ENGINEER

BRIDGE NO.
POST MILES

MONITOR WALL FRAME
FRAMING SECTIONS – SHEET 1

DESIGN DETAIL SHEET (ENGLISH) (REV. 03/14/12)

ORIGINAL SCALE IN INCHES FOR REDUCED PLANS 0 1 2 3

UNIT: 3021
PROJECT NUMBER & PHASE: 12130001821 CONTRACT NO.: 12-0N2204

DISREGARD PRINTS BEARING EARLIER REVISION DATES

REVISION DATES | SHEET 86 | OF 91

FILE -) 4298- S003.dgn

USERNAME -Gibson.Phd DATE PLOTTED -) 15-MAY-2015 TIME PLOTTED -) 10:39

DIST	COUNTY	ROUTE	POST MILES TOTAL PROJECT	SHEET No	TOTAL SHEETS
12	Ora	Var		87	91

Subhashini M. Sheikh 2-25-15
REGISTERED CIVIL ENGINEER DATE

May 04, 2015
PLANS APPROVAL DATE

REGISTERED PROFESSIONAL ENGINEER S. M. Sheikh No. 32677 Exp. 12/31/15 CIVIL STATE OF CALIFORNIA

The State of California or its officers or agents shall not be responsible for the accuracy or completeness of scanned copies of this plan sheet.

RBF CONSULTING
14725 ALTON PKWY
IRVINE, CA 92618

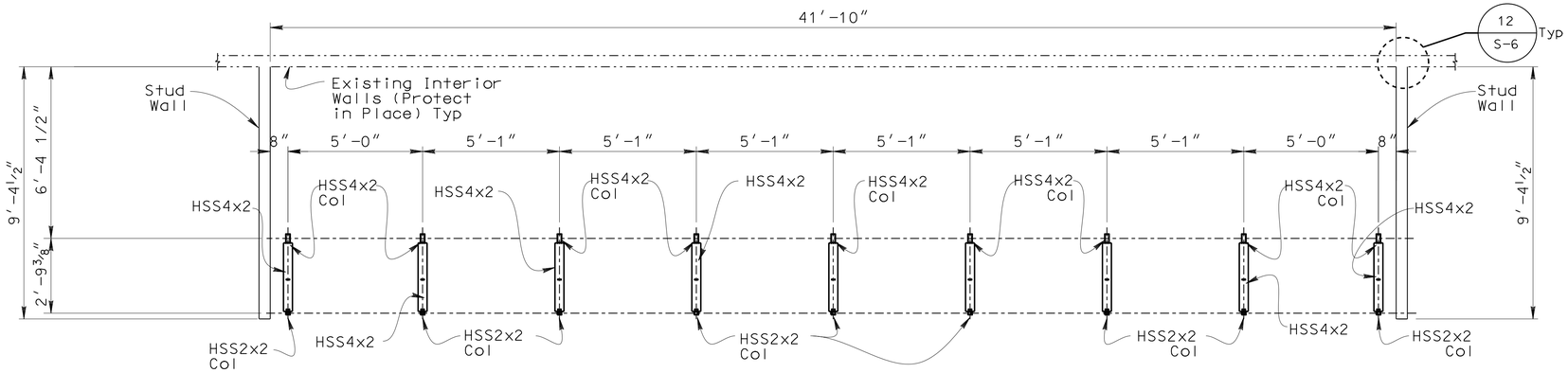

CROSS SECTION "E"
3/8" = 1'-0"

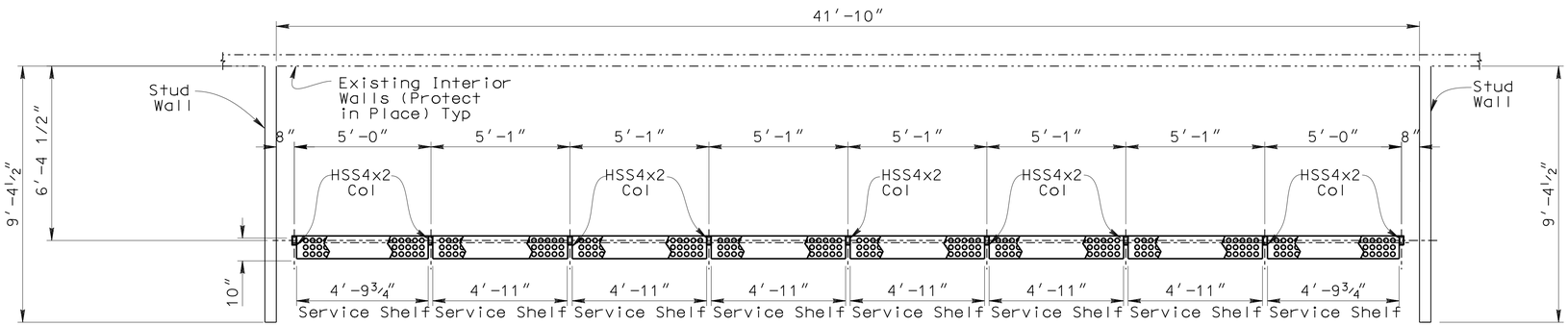

CROSS SECTION "F"
3/8" = 1'-0"

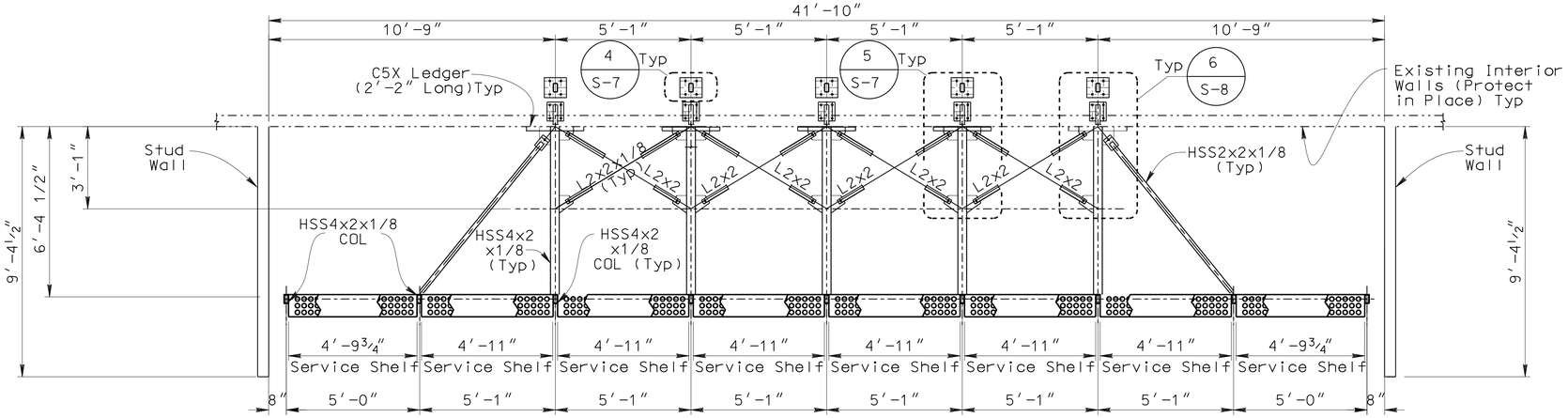

CROSS SECTION "G"
3/8" = 1'-0"

S-4

DESIGN	BY F. Sanchez	CHECKED C.Stelea	
DETAILS	BY C. Stelea	CHECKED F. Sanchez	
QUANTITIES	BY F. Sanchez	CHECKED C. Stelea	

Abdol Gharavi
DESIGN OVERSIGHT ABDOL GHARAVI
2-25-15
SIGN OFF DATE

PREPARED FOR THE STATE OF CALIFORNIA
DEPARTMENT OF TRANSPORTATION

S. M. SHEIKH
PROJECT ENGINEER

BRIDGE NO.
POST MILES

MONITOR WALL FRAME
FRAMING SECTIONS – SHEET 2

DESIGN DETAIL SHEET (ENGLISH) (REV. 03/14/12)

ORIGINAL SCALE IN INCHES FOR REDUCED PLANS 0 1 2 3

UNIT: 3021
PROJECT NUMBER & PHASE: 12130001821 CONTRACT NO.: 12-0N2204

DISREGARD PRINTS BEARING EARLIER REVISION DATES

REVISION DATES | SHEET 87 | OF 91

FILE -) 4298- S004.dgn

USERNAME -Gibson.Phd DATE PLOTTED -) 15-MAY-2015 TIME PLOTTED -) 10:39

DIST	COUNTY	ROUTE	POST MILES TOTAL PROJECT	SHEET No	TOTAL SHEETS
12	Ora	Var		88	91

Subhashini M. Sheikh 2-25-15
REGISTERED CIVIL ENGINEER DATE

May 04, 2015
PLANS APPROVAL DATE

REGISTERED PROFESSIONAL ENGINEER S. M. Sheikh No. 32677 Exp. 12/31/15 CIVIL STATE OF CALIFORNIA

The State of California or its officers or agents shall not be responsible for the accuracy or completeness of scanned copies of this plan sheet.

RBF CONSULTING
14725 ALTON PKWY
IRVINE, CA 92618

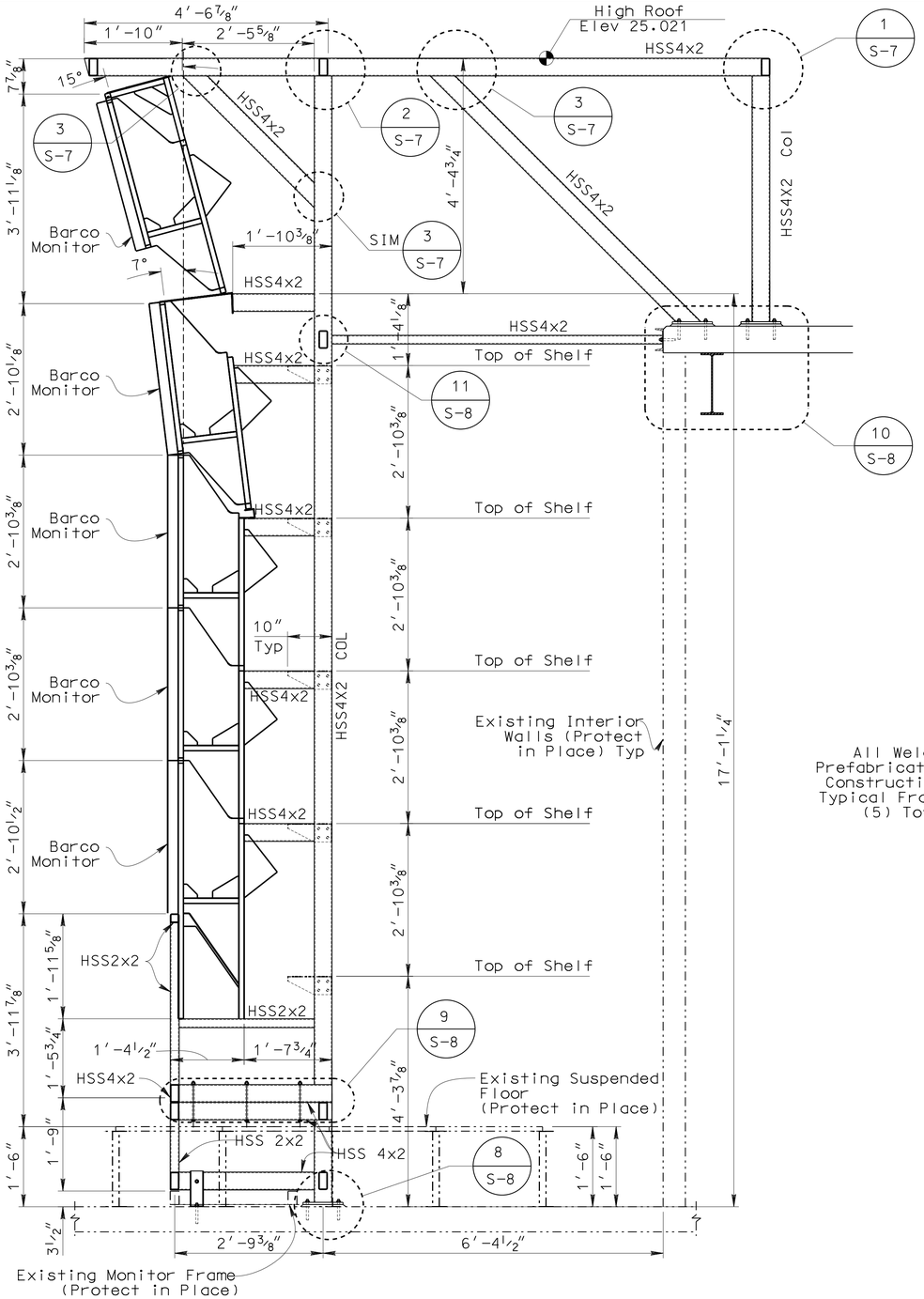

CROSS SECTION "K"
3/4" = 1'-0"

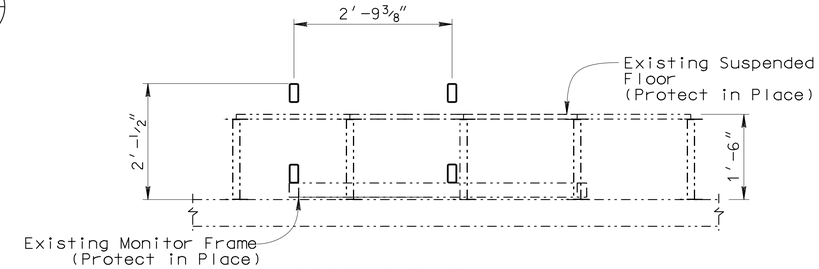

CROSS SECTION "M"
3/4" = 1'-0"

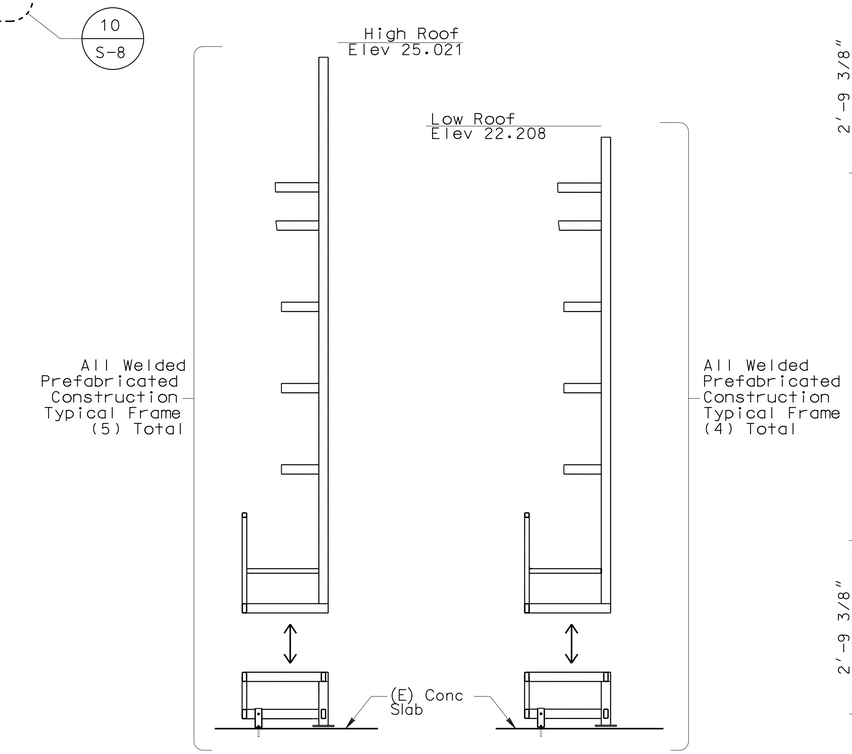

TYPICAL PREFABRICATED FRAME ELEVATION
3/8" = 1'-0"

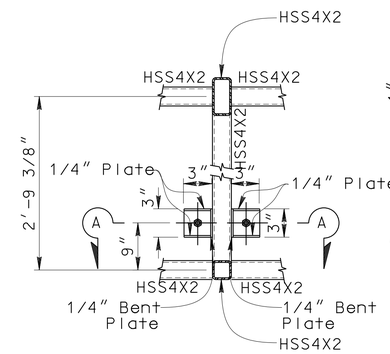

BRACKET CONNECTION TYPE 1
1" = 1'-0"

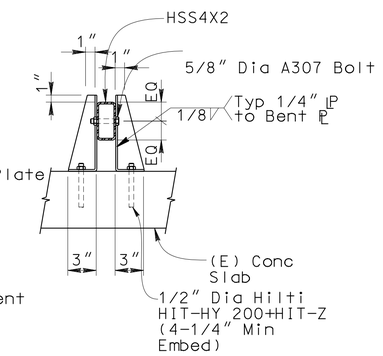

CROSS SECTION "A"
1" = 1'-0"

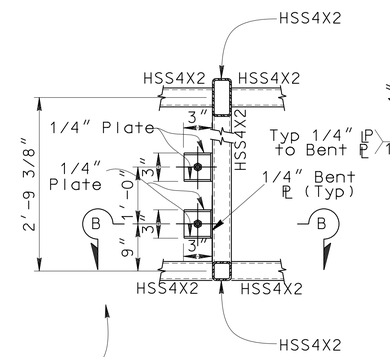

BRACKET CONNECTION TYPE 2
1" = 1'-0"

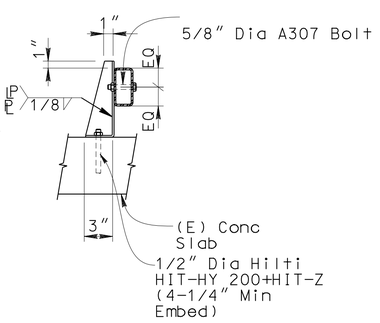

CROSS SECTION "B"
1" = 1'-0"

S-5

Abdol Gharavi
DESIGN OVERSIGHT ABDOL GHARAVI
2-25-15
SIGN OFF DATE

	BY	CHECKED
DESIGN	F. Sanchez	C.Stelea
DETAILS	C. Stelea	F. Sanchez
QUANTITIES	F. Sanchez	C. Stelea

PREPARED FOR THE STATE OF CALIFORNIA DEPARTMENT OF TRANSPORTATION

S. M. SHEIKH
PROJECT ENGINEER

BRIDGE NO.
POST MILES

MONITOR WALL FRAME
FRAMING SECTIONS – SHEET 3

DESIGN DETAIL SHEET (ENGLISH) (REV. 03/14/12)

ORIGINAL SCALE IN INCHES FOR REDUCED PLANS 0 1 2 3

UNIT: 3021
PROJECT NUMBER & PHASE: 12130001821 CONTRACT NO.: 12-0N2204

DISREGARD PRINTS BEARING EARLIER REVISION DATES

REVISION DATES

SHEET 88 OF 91

FILE => 4298- S005.dgn

USERNAME - <Gibson.Phil> DATE PLOTTED => 15 MAY 2015 TIME PLOTTED => 10:39

DIST	COUNTY	ROUTE	POST MILES TOTAL PROJECT	SHEET No	TOTAL SHEETS
12	Ora	Var		89	91

Salahuddin M. Sheikh 2-25-15
REGISTERED CIVIL ENGINEER DATE

May 04, 2015
PLANS APPROVAL DATE

REGISTERED PROFESSIONAL ENGINEER S. M. Sheikh No. 32677 Exp. 12/31/15 CIVIL STATE OF CALIFORNIA

The State of California or its officers or agents shall not be responsible for the accuracy or completeness of scanned copies of this plan sheet.

RBF CONSULTING
14725 ALTON PKWY
IRVINE, CA 92618

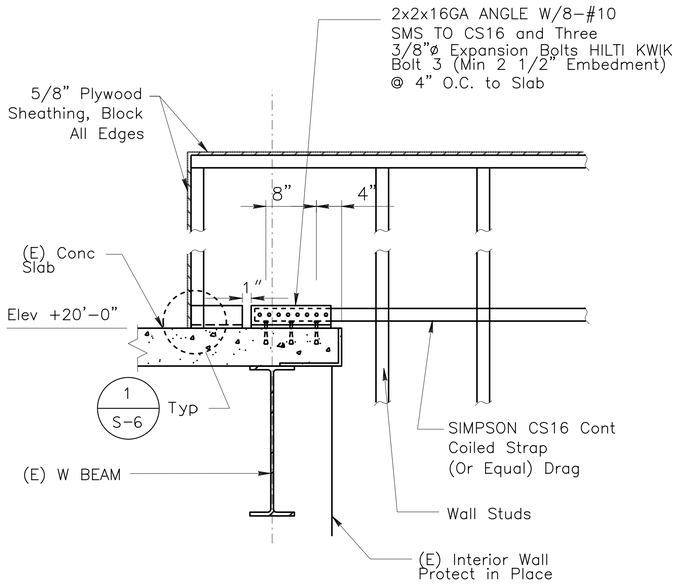

CROSS SECTION "R"
3" = 1'-0"

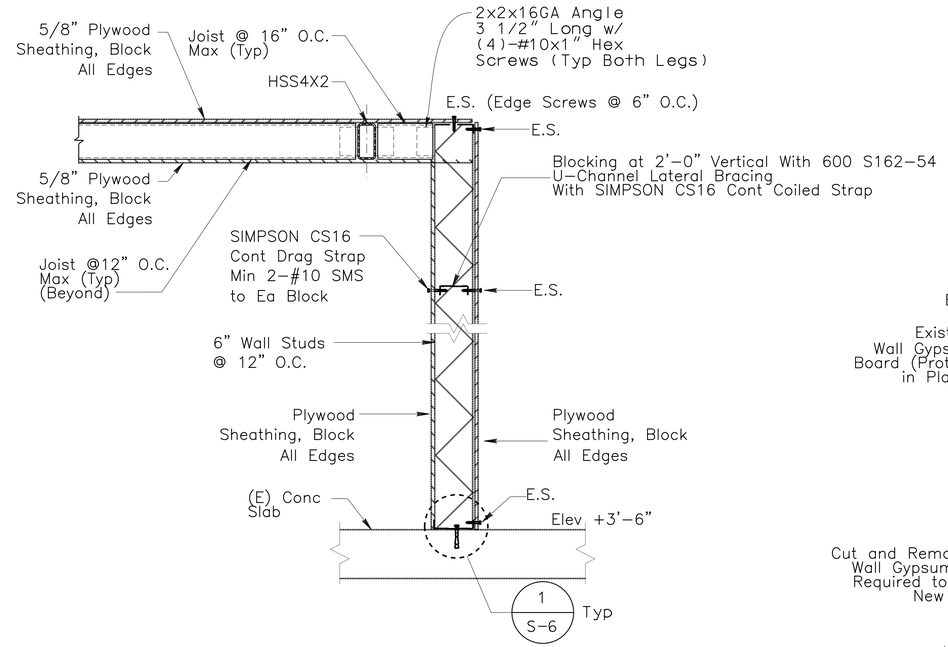

CROSS SECTION "S"
3" = 1'-0"

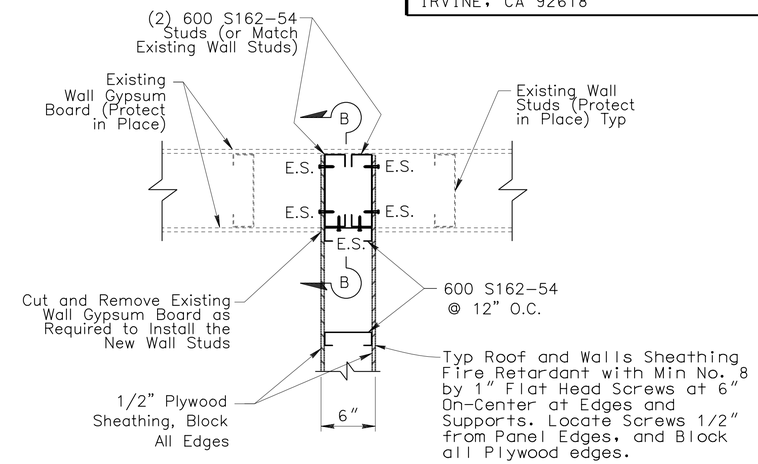

DETAIL "12"
1 1/2" = 1'-0"

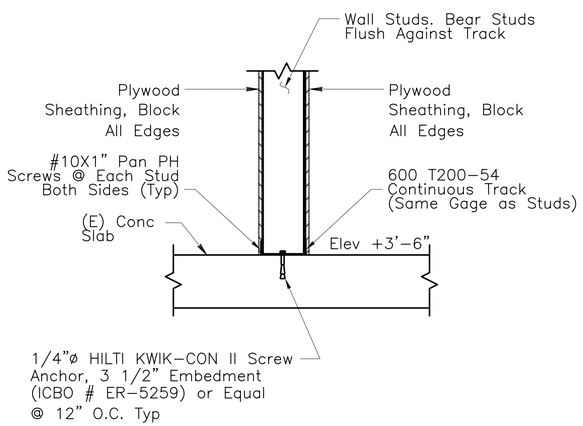

DETAIL "1"
1 1/2" = 1'-0"

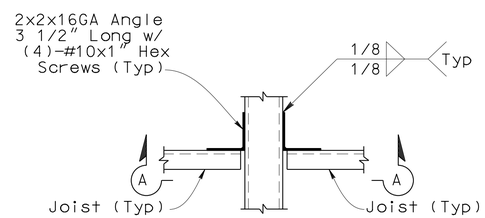

DETAIL "2"
3" = 1'-0"

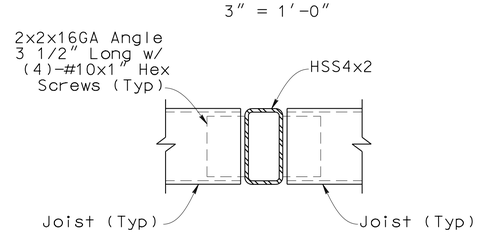

CROSS SECTION "A"
3" = 1'-0"

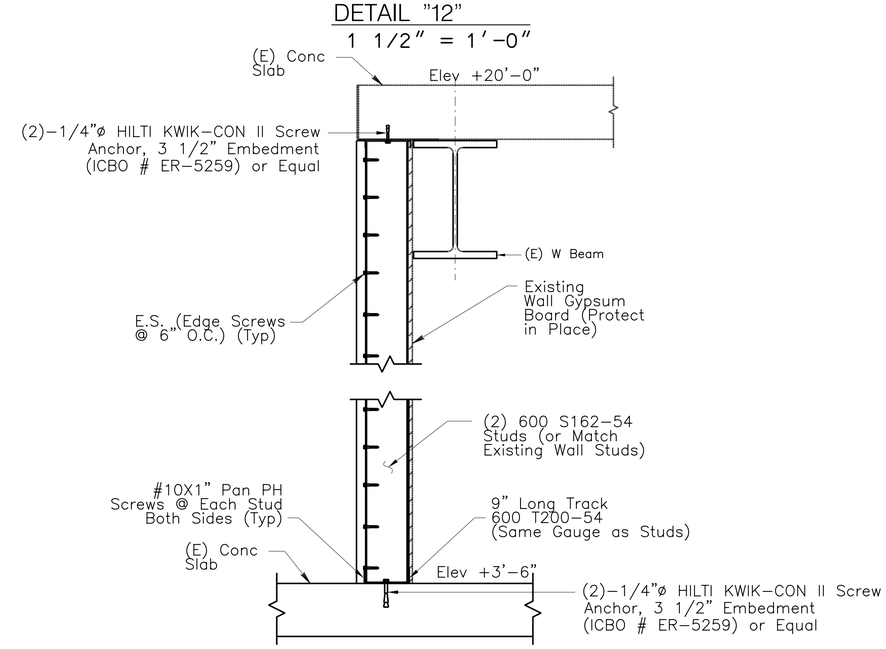

CROSS SECTION "B"
1 1/2" = 1'-0"

S-6

Abdol Gharavi
DESIGN OVERSIGHT ABDOL GHARAVI
2-25-15
SIGN OFF DATE

	BY	CHECKED
DESIGN	F. Sanchez	C.Stelea
DETAILS	C. Stelea	F. Sanchez
QUANTITIES	F. Sanchez	C. Stelea

PREPARED FOR THE STATE OF CALIFORNIA DEPARTMENT OF TRANSPORTATION

S. M. SHEIKH
PROJECT ENGINEER

BRIDGE NO.
POST MILES

MONITOR WALL FRAME
INTERIOR WALL FRAMING DETAILS

DESIGN DETAIL SHEET (ENGLISH) (REV. 03/14/12)

ORIGINAL SCALE IN INCHES FOR REDUCED PLANS 0 1 2 3

UNIT: 3021
PROJECT NUMBER & PHASE: 12130001821 CONTRACT NO.: 12-0N2204

DISREGARD PRINTS BEARING EARLIER REVISION DATES

REVISION DATES

SHEET 89 OF 91

FILE -) 4298- S006.dgn

USERNAME -Gibson.Phan DATE PLOTTED -) 15-MAY-2015 TIME PLOTTED -) 10:39

DIST	COUNTY	ROUTE	POST MILES TOTAL PROJECT	SHEET No	TOTAL SHEETS
12	Ora	Var		90	91

Subhashini M. Sheikh 2-25-15
REGISTERED CIVIL ENGINEER DATE

May 04, 2015
PLANS APPROVAL DATE

REGISTERED PROFESSIONAL ENGINEER S. M. Sheikh No. 32677 Exp. 12/31/15 CIVIL STATE OF CALIFORNIA

The State of California or its officers or agents shall not be responsible for the accuracy or completeness of scanned copies of this plan sheet.

RBF CONSULTING
14725 ALTON PKWY
IRVINE, CA 92618

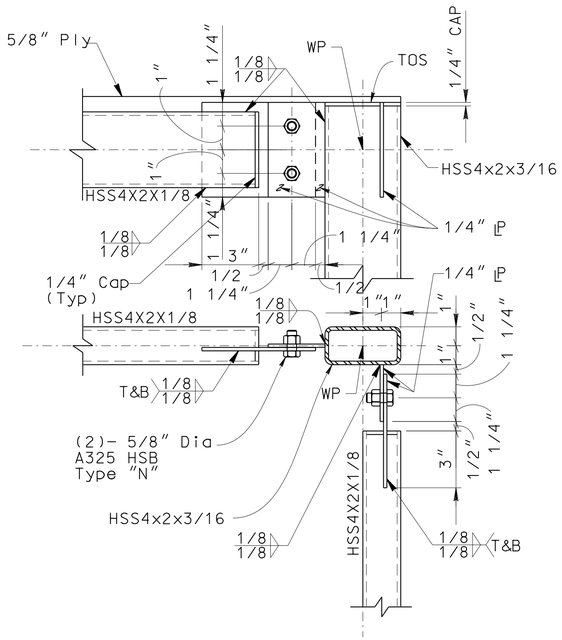

DETAIL "1"
3" = 1'-0"

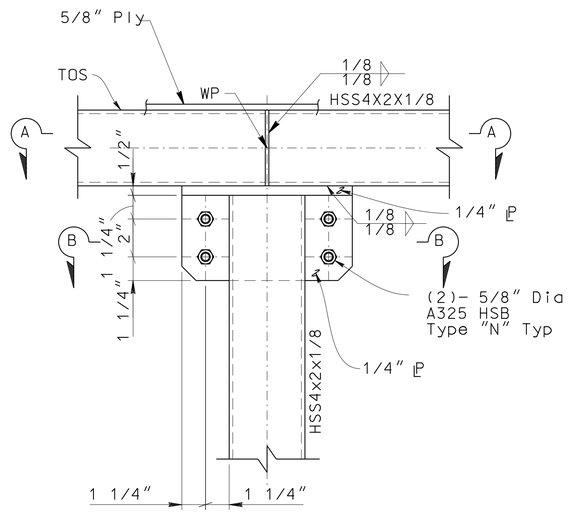

DETAIL "2"
3" = 1'-0"

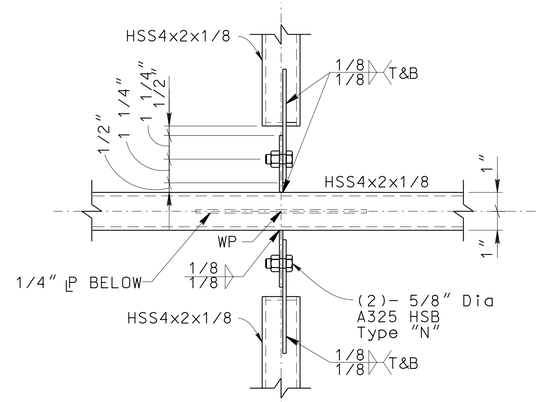

CROSS SECTION "A"
3" = 1'-0"

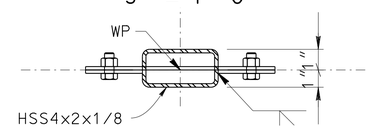

CROSS SECTION "B"
3" = 1'-0"

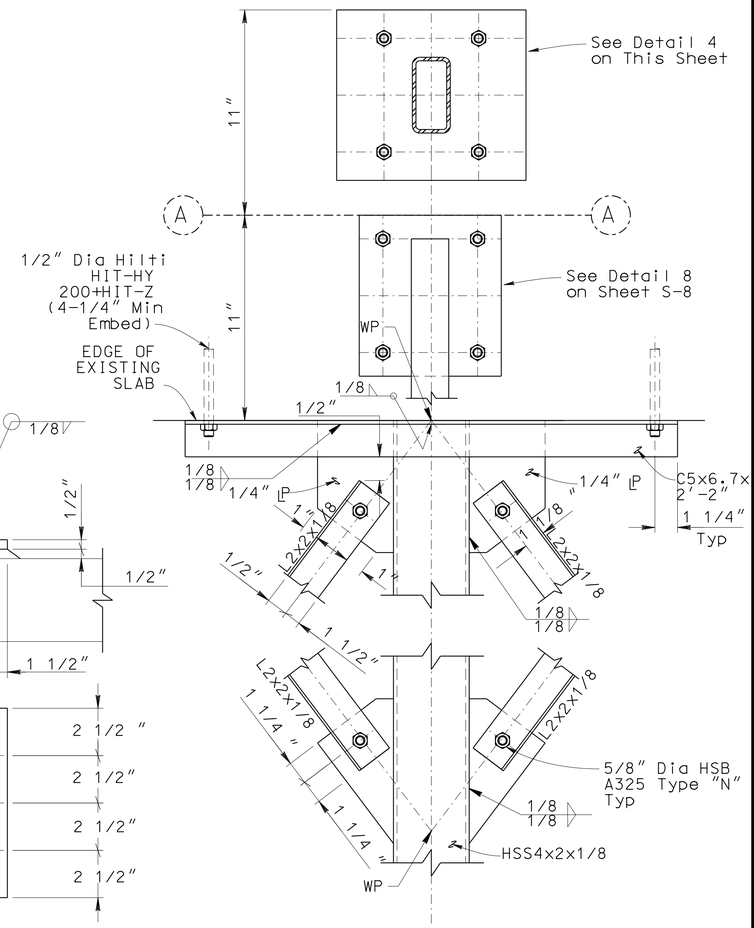

DETAIL "5"
3" = 1'-0"

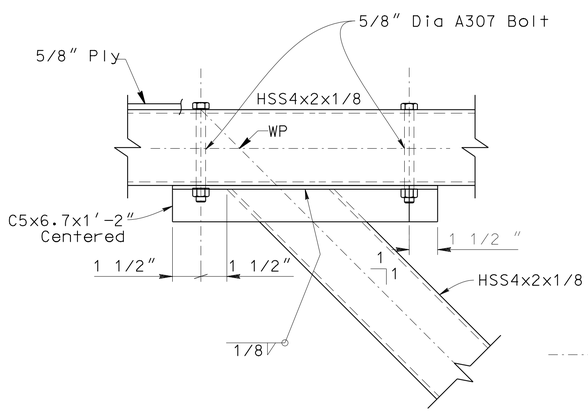

DETAIL "3"
3" = 1'-0"

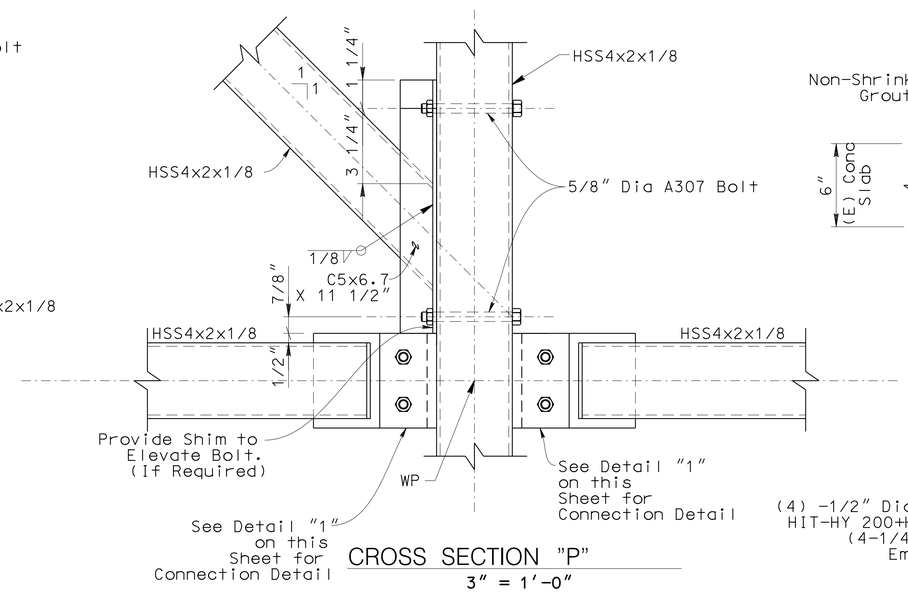

CROSS SECTION "P"
3" = 1'-0"

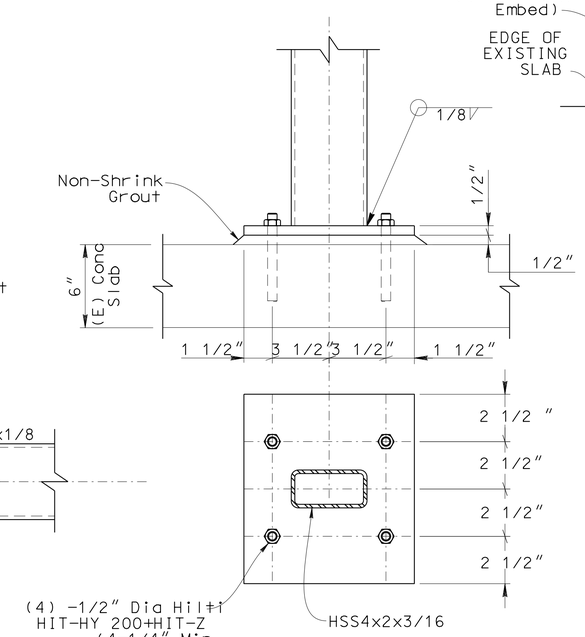

DETAIL "4"
3" = 1'-0"

S-7

DESIGN	BY F. Sanchez	CHECKED C.Stelea	PREPARED FOR THE STATE OF CALIFORNIA DEPARTMENT OF TRANSPORTATION	S. M. SHEIKH PROJECT ENGINEER
DETAILS	BY C. Stelea	CHECKED F. Sanchez		
QUANTITIES	BY F. Sanchez	CHECKED C. Stelea		

Abdol Gharavi
DESIGN OVERSIGHT ABDOL GHARAVI
2-25-15
SIGN OFF DATE

BRIDGE NO.
POST MILES

MONITOR WALL FRAME
CONNECTIONS DETAILS – SHEET 1

DESIGN DETAIL SHEET (ENGLISH) (REV. 03/14/12)

ORIGINAL SCALE IN INCHES FOR REDUCED PLANS 0 1 2 3

UNIT: 3021
PROJECT NUMBER & PHASE: 12130001821 CONTRACT NO.: 12-0N2204

DISREGARD PRINTS BEARING EARLIER REVISION DATES

REVISION DATES

SHEET 90 OF 91

FILE -) 4298- S007.dgn

USERNAME -)Gibson.Phd DATE PLOTTED -) 15-MAY-2015 TIME PLOTTED -) 10:39

DIST	COUNTY	ROUTE	POST MILES TOTAL PROJECT	SHEET No	TOTAL SHEETS
12	Ora	Var		91	91

REGISTERED CIVIL ENGINEER 2-25-15 DATE

May 04, 2015
PLANS APPROVAL DATE

REGISTERED PROFESSIONAL ENGINEER S. M. Sheikh No. 32677 Exp. 12/31/15 CIVIL STATE OF CALIFORNIA

The State of California or its officers or agents shall not be responsible for the accuracy or completeness of scanned copies of this plan sheet.

RBF CONSULTING
14725 ALTON PKWY
IRVINE, CA 92618

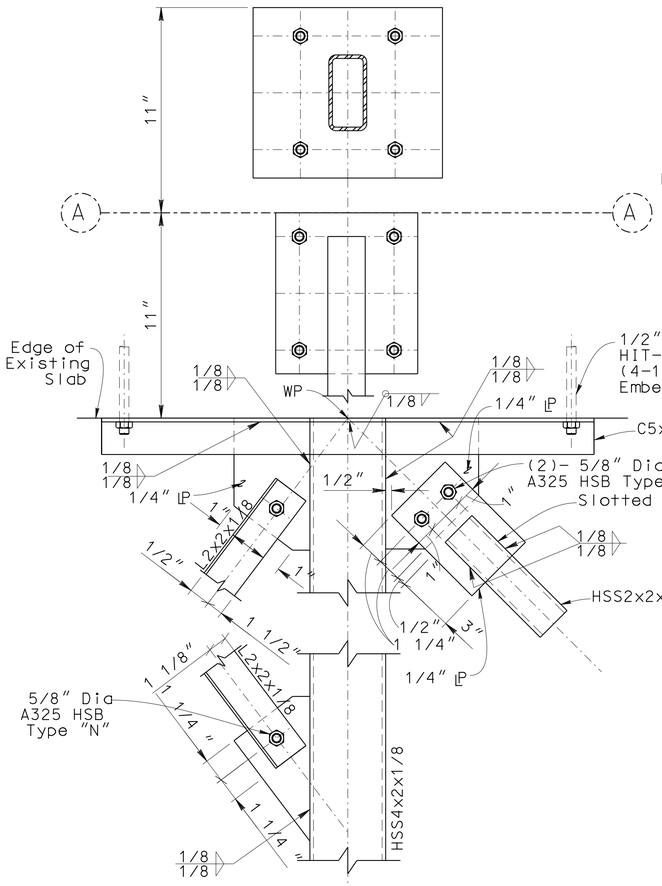

DETAIL "6"
3" = 1'-0"

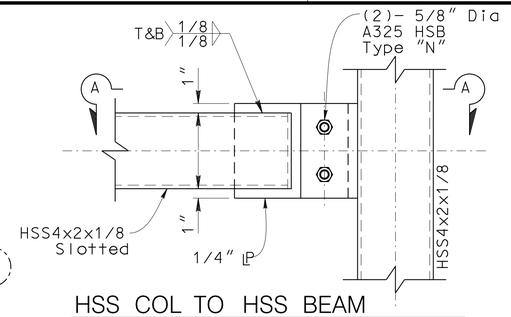

HSS COL TO HSS BEAM
CONNECTION DETAIL "7"
3" = 1'-0"

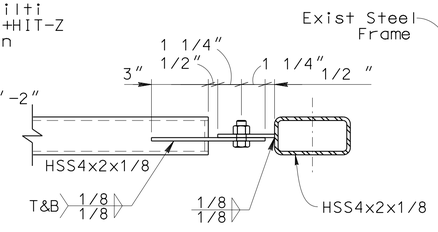

CROSS SECTION "A"
3" = 1'-0"

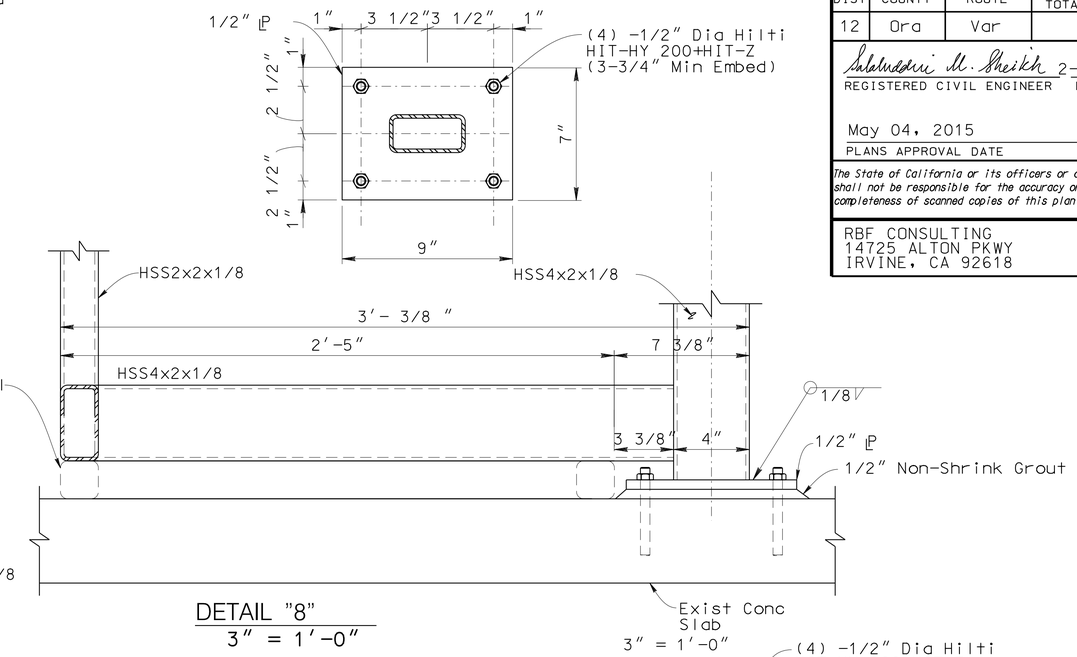

DETAIL "8"
3" = 1'-0"

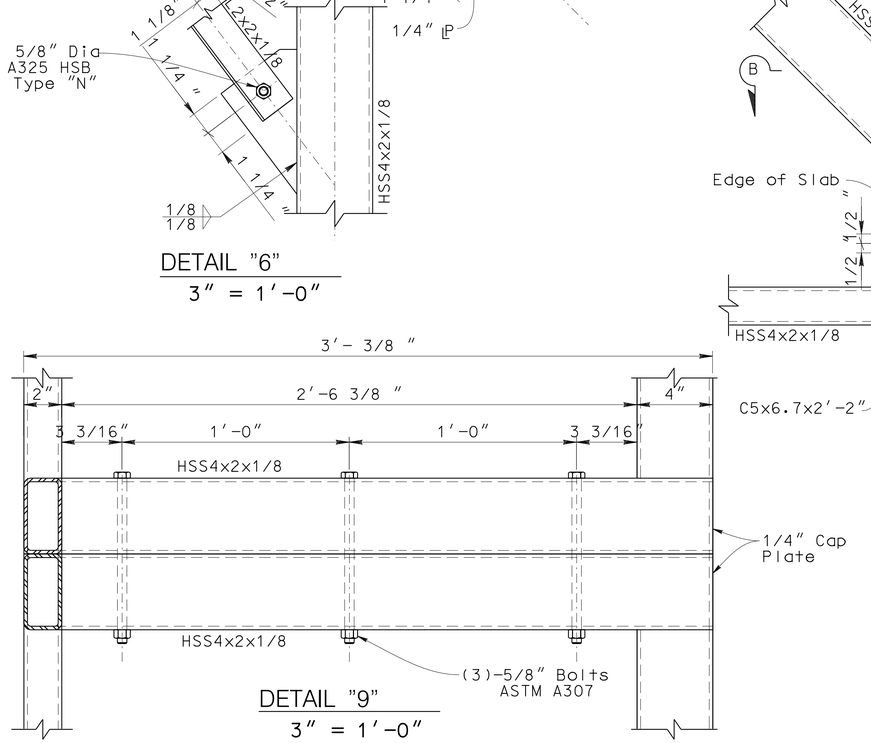

DETAIL "9"
3" = 1'-0"

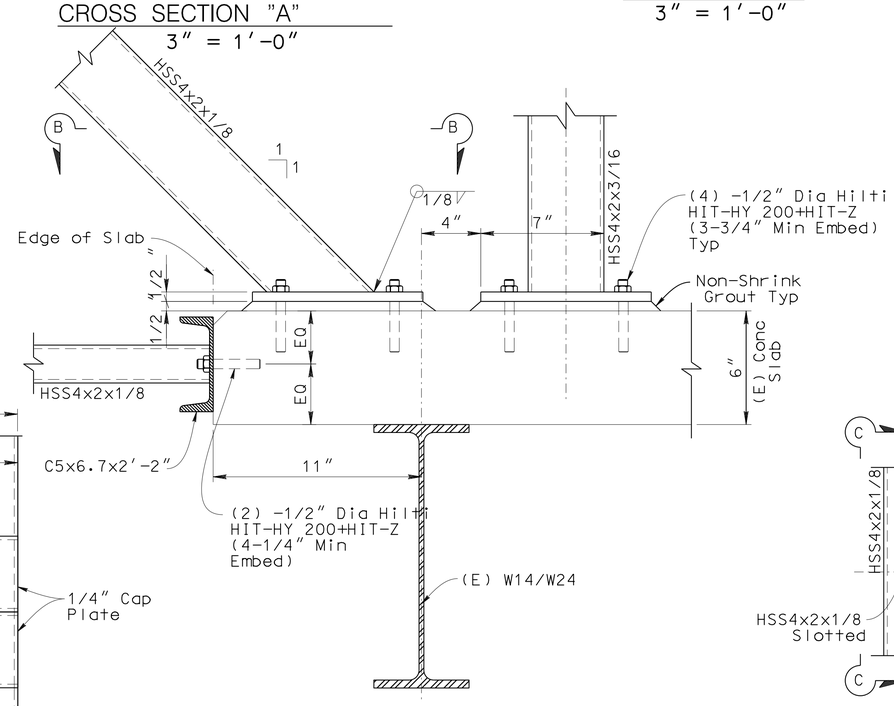

DETAIL "10"
3" = 1'-0"

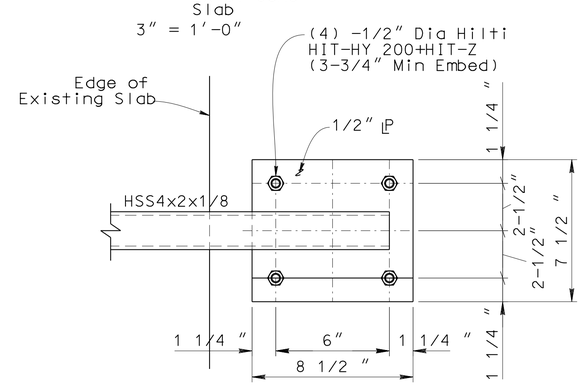

CROSS SECTION "B"
3" = 1'-0"

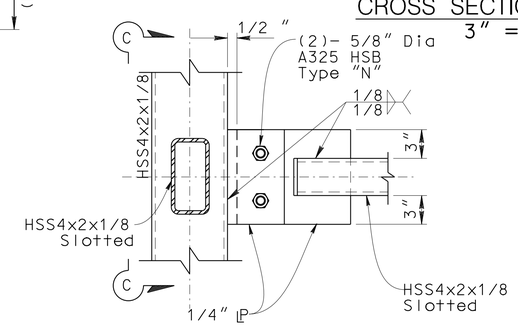

DETAIL "11"
3" = 1'-0"

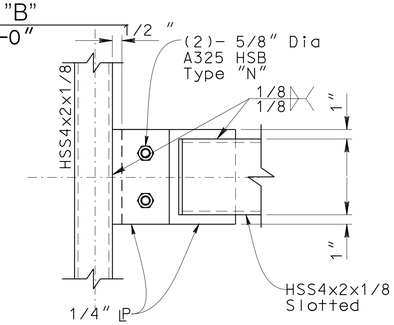

CROSS SECTION "C"
3" = 1'-0"

S-8

DESIGN	BY F. Sanchez	CHECKED C.Stelea	
DETAILS	BY C. Stelea	CHECKED F. Sanchez	
QUANTITIES	BY F. Sanchez	CHECKED C. Stelea	

DESIGN OVERSIGHT ABDOL GHARAVI
2-25-15
SIGN OFF DATE

PREPARED FOR THE STATE OF CALIFORNIA DEPARTMENT OF TRANSPORTATION

S. M. SHEIKH
PROJECT ENGINEER

BRIDGE NO.
POST MILES

MONITOR WALL FRAME
CONNECTIONS DETAILS – SHEET 2

DESIGN DETAIL SHEET (ENGLISH) (REV. 03/14/12)

ORIGINAL SCALE IN INCHES FOR REDUCED PLANS 0 1 2 3

UNIT: 3021
PROJECT NUMBER & PHASE: 12130001821 CONTRACT NO.: 12-0N2204

DISREGARD PRINTS BEARING EARLIER REVISION DATES

REVISION DATES

SHEET 91 OF 91

FILE -) 4298- S008.dgn

USERNAME -Gibson.Phadn TIME PLOTTED -) 10:39 DATE PLOTTED -) 15-MAY-2015