Dist	COUNTY	ROUTE	POST MILES TOTAL PROJECT	SHEET No.	TOTAL SHEETS
12	Ora	73,133	16.6,4.2	1	107

ACHSNHPG-P073(114)E

STATE OF CALIFORNIA
DEPARTMENT OF TRANSPORTATION

PROJECT PLANS FOR CONSTRUCTION ON
STATE HIGHWAY
IN ORANGE COUNTY IN LAGUNA BEACH
AT LAGUNA CANYON ROAD UNDERCROSSING

TO BE SUPPLEMENTED BY STANDARD PLANS DATED 2010

INDEX OF PLANS

SHEET No.	DESCRIPTION
1	TITLE AND LOCATION MAP
2-6	TYPICAL CROSS SECTIONS
7-8	LAYOUTS
9-11	CONSTRUCTION DETAILS
12-13	TEMPORARY WATER POLLUTION CONTROL PLANS
14	CONTOUR GRADING PLANS
15-25	DRAINAGE PLANS, PROFILES, DETAILS AND QUANTITIES
26	UTILITY PLANS
27	CONSTRUCTION AREA SIGNS
28-31	STAGE CONSTRUCTION PLANS
32	TRAFFIC HANDLING PLANS AND QUANTITIES
33-35	PAVEMENT DELINEATION PLANS, DETAILS AND QUANTITIES
36-43	SIGN PLANS, DETAILS AND QUANTITIES
44	SUMMARY OF QUANTITIES
45-47	LANDSCAPE PLANS
48-58	ELECTRICAL PLANS
59-92	REVISED STANDARD PLANS

STRUCTURE PLANS

93-107 RETAINING WALL NO. 69

THE STANDARD PLANS LIST APPLICABLE TO THIS CONTRACT IS INCLUDED IN THE NOTICE TO BIDDERS AND SPECIAL PROVISIONS BOOK.

LOCATION MAP

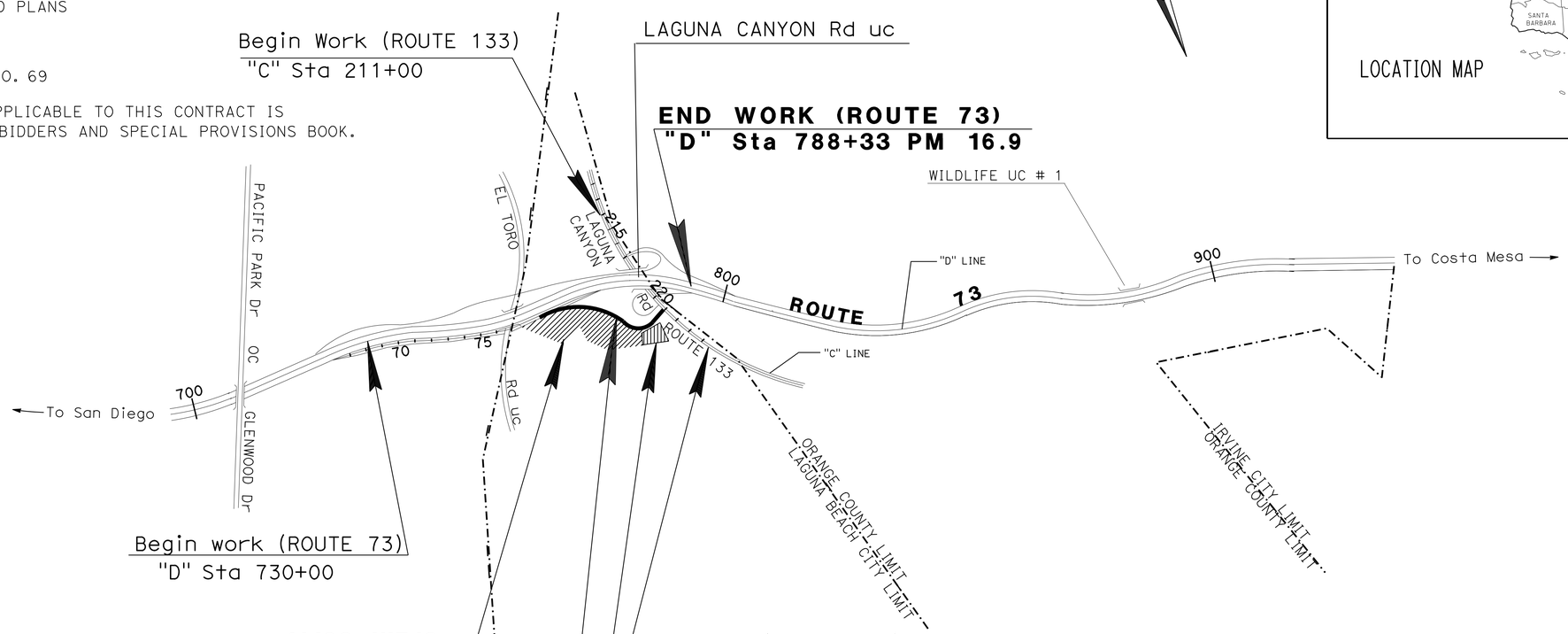

LOCATION OF CONSTRUCTION

ROUTE 73 "B" Sta 767+80 PM 16.6

ROUTE 133 "C" Sta 221+85.34 PM 4.2

THE CONTRACTOR SHALL POSSESS THE CLASS (OR CLASSES) OF LICENSE AS SPECIFIED IN THE "NOTICE TO BIDDERS."

NO SCALE

05-26-2015
PROJECT ENGINEER REGISTERED CIVIL ENGINEER — DATE

REGISTERED PROFESSIONAL ENGINEER FAZLOLLAH ZIAEE No. C59746 Exp. 12/31/15 CIVIL STATE OF CALIFORNIA

JUNE 1, 2015
PLANS APPROVAL DATE

THE STATE OF CALIFORNIA OR ITS OFFICERS OR AGENTS SHALL NOT BE RESPONSIBLE FOR THE ACCURACY OR COMPLETENESS OF SCANNED COPIES OF THIS PLAN SHEET.

CONTRACT No.	12-0M3404
PROJECT ID	1212000017

PROJECT MANAGER: MIKE VARIPAPA
DESIGN ENGINEER: MATTHEW CUGINI

LAST REVISION 5-19-15
DATE PLOTTED => 22-SEP-2015
TIME PLOTTED => 10:41

Dist	COUNTY	ROUTE	POST MILES TOTAL PROJECT	SHEET No.	TOTAL SHEETS
12	Ora	73,133	16.6,4.2	2	107

REGISTERED CIVIL ENGINEER DATE 05-26-2015

06-01-2015
PLANS APPROVAL DATE

REGISTERED PROFESSIONAL ENGINEER FAZLOLLAH ZIAIE No. C59746 Exp.12/31/15 CIVIL STATE OF CALIFORNIA

THE STATE OF CALIFORNIA OR ITS OFFICERS OR AGENTS SHALL NOT BE RESPONSIBLE FOR THE ACCURACY OR COMPLETENESS OF SCANNED COPIES OF THIS PLAN SHEET.

NOTES:

1. DIMENSIONS OF THE STRUCTURAL SECTIONS ARE SUBJECT TO TOLERANCES SPECIFIED IN THE STANDARD SPECIFICATIONS.

TYPICAL PAVEMENT STRUCTURAL SECTION

1 [0.1′ RHMA-OGFC, 0.2′ RHMA-G, 0.4′ HMA (TYPE A), 0.80′ CI2 AB, 0.75′ CI2 AS]

2 [0.20′ RHMA-G, 0.35′ HMA (TYPE A), 0.35′ CI2 AS]

3 [0.1′ RHMA-OGFC, 0.1′ COLD PLANE AC PAVEMENT]

4 [0.25′ PLACE HMA (Misc AREA)]

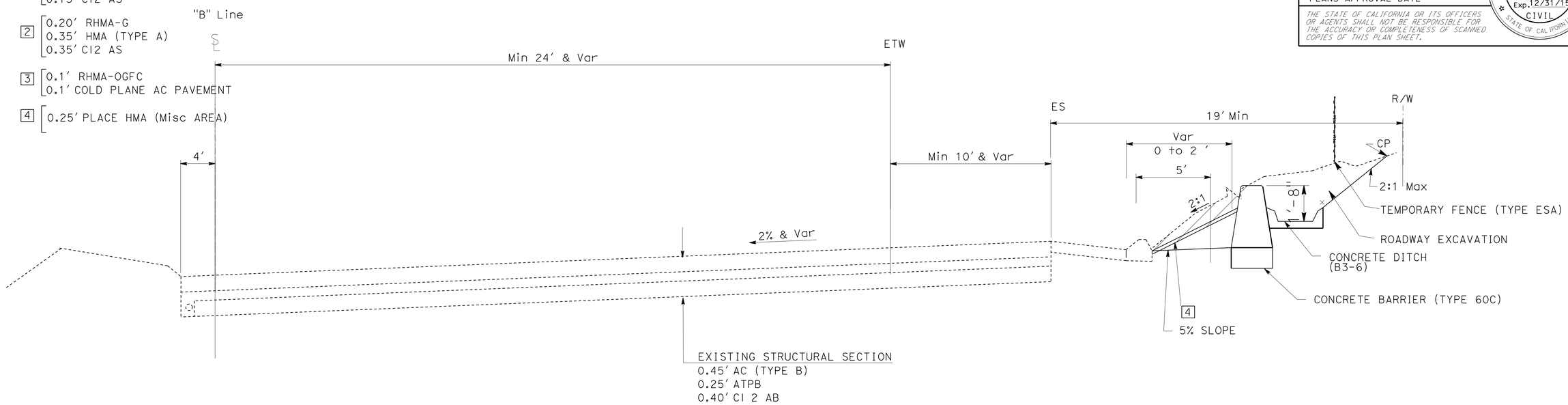

NB ROUTE 73 COLLECTOR/DISTRIBUTOR
"B' STA 768+50 TO "B" STA 769+50.00

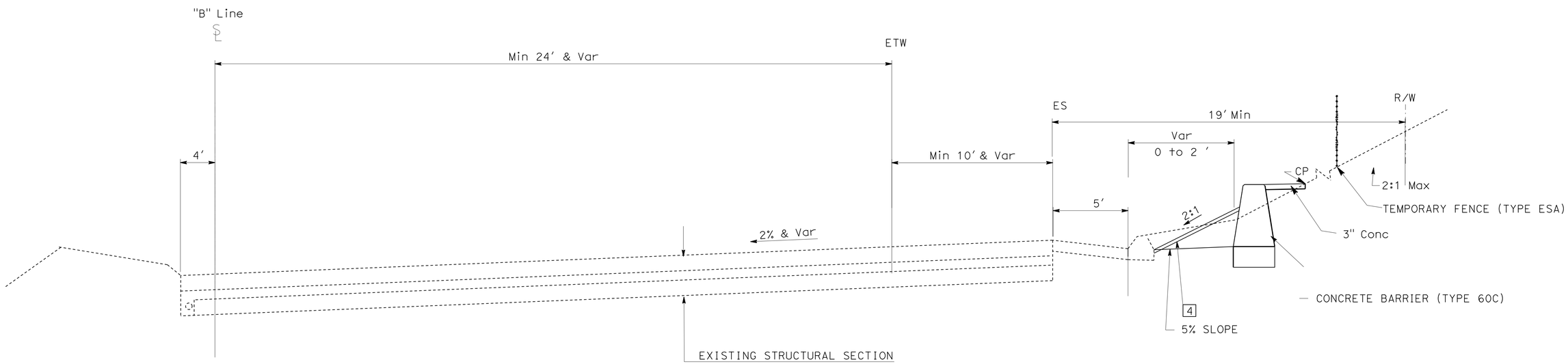

NB ROUTE 73 COLLECTOR/DISTRIBUTOR
"B" STA 767+80 TO "B" STA 768+50.00

TYPICAL CROSS SECTIONS

NO SCALE

X-1

STATE OF CALIFORNIA - DEPARTMENT OF TRANSPORTATION
Caltrans®
DESIGN C
FUNCTIONAL SUPERVISOR: MATTHEW CUGINI
CALCULATED-DESIGNED BY: FAZLOLLAH ZIAIE
CHECKED BY: FAZLOLLAH ZIAIE
REVISED BY
DATE REVISED

LAST REVISION 5-19-15
DATE PLOTTED => 22-SEP-2015
TIME PLOTTED => 10:41

Dist	COUNTY	ROUTE	POST MILES TOTAL PROJECT	SHEET No.	TOTAL SHEETS
12	Ora	73,133	16.6,4.2	3	107

REGISTERED CIVIL ENGINEER DATE 05-26-2015

PLANS APPROVAL DATE 06-01-2015

REGISTERED PROFESSIONAL ENGINEER FAZLOLLAH ZIAIE No. C59746 Exp.12/31/15 CIVIL STATE OF CALIFORNIA

THE STATE OF CALIFORNIA OR ITS OFFICERS OR AGENTS SHALL NOT BE RESPONSIBLE FOR THE ACCURACY OR COMPLETENESS OF SCANNED COPIES OF THIS PLAN SHEET.

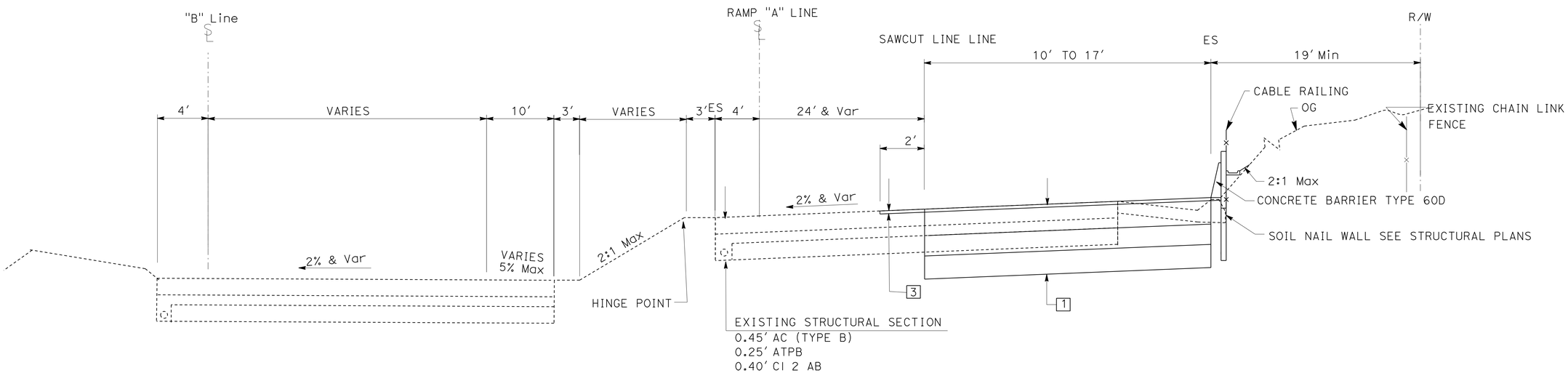

NB ROUTE 73 EXIT RAMP (COLLECTOR)/DISTRIBUTOR

"B" STA 769+90.95 TO "B" STA 773+51.24 (="A" LINE 73+52.0)

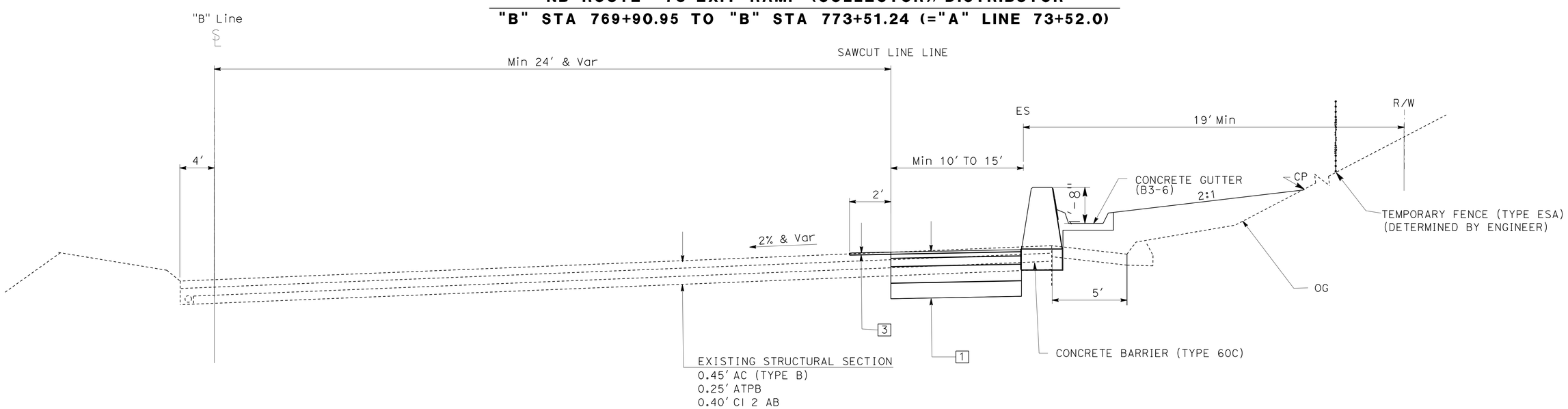

NB ROUTE 73 COLLECTOR/DISTRIBUTOR

"B" STA 769+50 TO "B" STA 769+90.95

TYPICAL CROSS SECTIONS

NO SCALE

X-2

STATE OF CALIFORNIA - DEPARTMENT OF TRANSPORTATION

Caltrans

DESIGN C

FUNCTIONAL SUPERVISOR: MATTHEW CUGINI

CALCULATED-DESIGNED BY: FAZLOLLAH ZIAIE

CHECKED BY: FAZLOLLAH ZIAIE

REVISED BY | DATE REVISED

LAST REVISION 5-19-15

DATE PLOTTED => 22-SEP-2015
TIME PLOTTED => 10:41

Dist	COUNTY	ROUTE	POST MILES TOTAL PROJECT	SHEET No.	TOTAL SHEETS
12	Ora	73,133	16.6,4.2	4	107

05-26-2015
REGISTERED CIVIL ENGINEER DATE

06-01-2015
PLANS APPROVAL DATE

REGISTERED PROFESSIONAL ENGINEER FAZLOLLAH ZIAIE No. C59746 Exp.12/31/15 CIVIL STATE OF CALIFORNIA

THE STATE OF CALIFORNIA OR ITS OFFICERS OR AGENTS SHALL NOT BE RESPONSIBLE FOR THE ACCURACY OR COMPLETENESS OF SCANNED COPIES OF THIS PLAN SHEET.

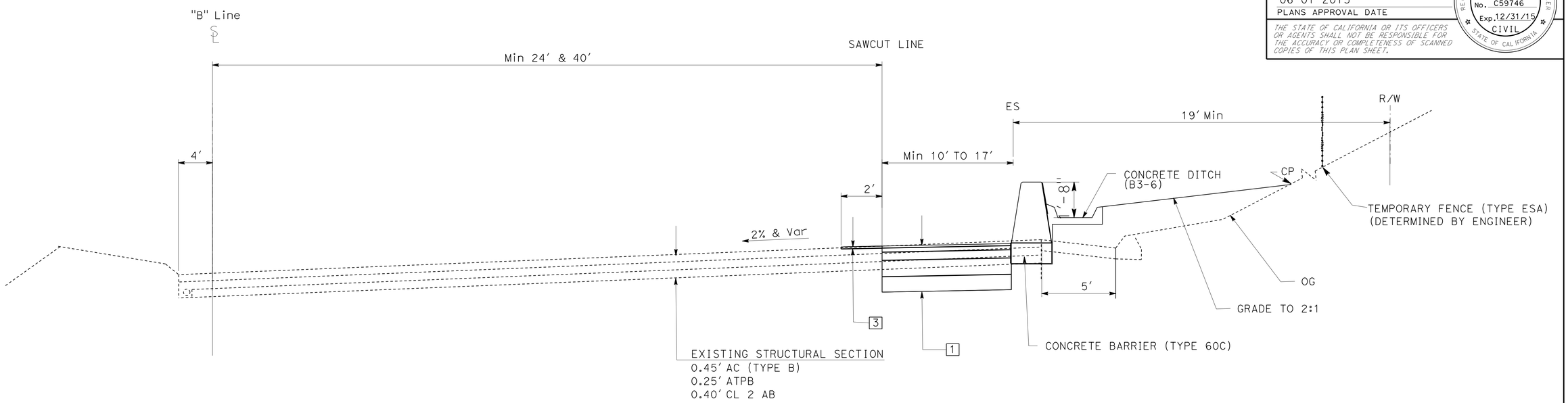

NB ROUTE 73 COLLECTOR/DISTRIBUTOR

"A" STA 80+22.10 TO "A" STA 80+24.65

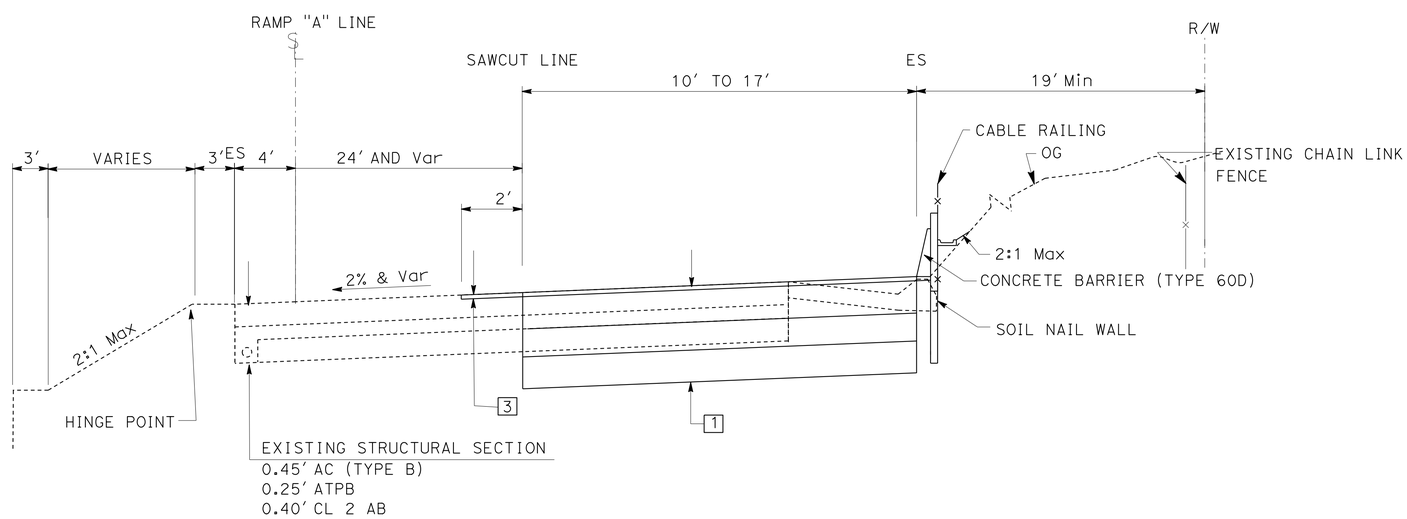

NB ROUTE 73 EXIT RAMP (COLLECTOR)/DISTRIBUTOR

STA "A" 73+52.00 TO STA "A" 80+22.10

TYPICAL CROSS SECTIONS

NO SCALE

X-3

REVISED BY	DATE REVISED
FAZLOLLAH ZIAIE	FAZLOLLAH ZIAIE
CALCULATED-DESIGNED BY	CHECKED BY
FUNCTIONAL SUPERVISOR	MATTHEW CUGINI

STATE OF CALIFORNIA - DEPARTMENT OF TRANSPORTATION

Caltrans DESIGN C

LAST REVISION 5-19-15

DATE PLOTTED => 22-SEP-2015
TIME PLOTTED => 10:41

Dist	COUNTY	ROUTE	POST MILES TOTAL PROJECT	SHEET No.	TOTAL SHEETS
12	Ora	73,133	16.6,4.2	5	107

REGISTERED CIVIL ENGINEER 05-26-2015 DATE

06-01-2015
PLANS APPROVAL DATE

REGISTERED PROFESSIONAL ENGINEER FAZLOLLAH ZIAIE No. C59746 Exp.12/31/15 CIVIL STATE OF CALIFORNIA

THE STATE OF CALIFORNIA OR ITS OFFICERS OR AGENTS SHALL NOT BE RESPONSIBLE FOR THE ACCURACY OR COMPLETENESS OF SCANNED COPIES OF THIS PLAN SHEET.

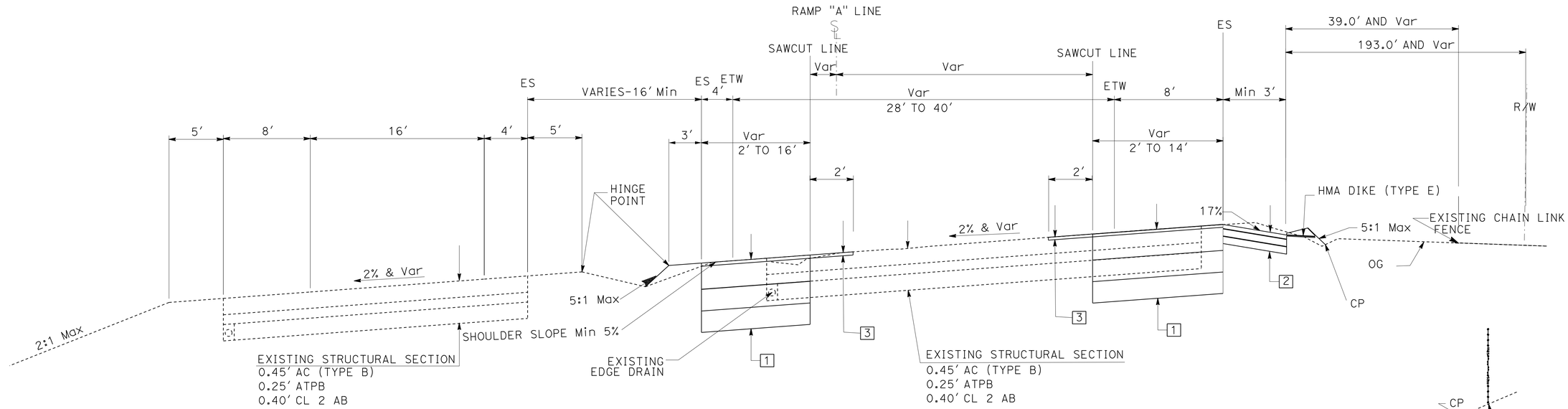

NB ROUTE 73 EXIT RAMP (COLLECTOR)/DISTRIBUTOR
"A" STA 84+33.00 TO "A" STA 85+66.00

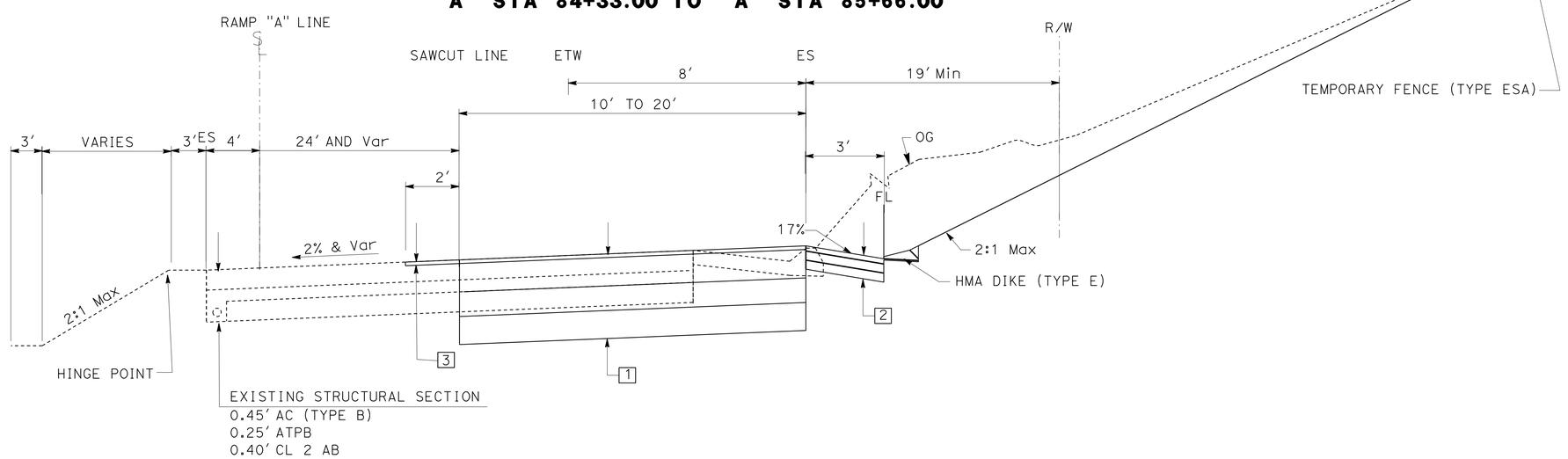

NB ROUTE 73 EXIT RAMP (COLLECTOR)/DISTRIBUTOR
"A" STA 80+22.10 TO "A" STA 84+33.00

TYPICAL CROSS SECTIONS

NO SCALE

X-4

STATE OF CALIFORNIA - DEPARTMENT OF TRANSPORTATION
Caltrans
DESIGN C
FUNCTIONAL SUPERVISOR: MATTHEW CUGINI
CALCULATED-DESIGNED BY: FAZLOLLAH ZIAIE
CHECKED BY: FAZLOLLAH ZIAIE
REVISED BY
DATE REVISED

LAST REVISION 5-19-15
DATE PLOTTED => 22-SEP-2015
TIME PLOTTED => 10:41

Dist	COUNTY	ROUTE	POST MILES TOTAL PROJECT	SHEET No.	TOTAL SHEETS
12	Ora	73,133	16.6,4.2	6	107

REGISTERED CIVIL ENGINEER 05-26-2015 DATE

06-01-2015
PLANS APPROVAL DATE

REGISTERED PROFESSIONAL ENGINEER FAZLOLLAH ZIAIE No. C59746 Exp.12/31/15 CIVIL STATE OF CALIFORNIA

THE STATE OF CALIFORNIA OR ITS OFFICERS OR AGENTS SHALL NOT BE RESPONSIBLE FOR THE ACCURACY OR COMPLETENESS OF SCANNED COPIES OF THIS PLAN SHEET.

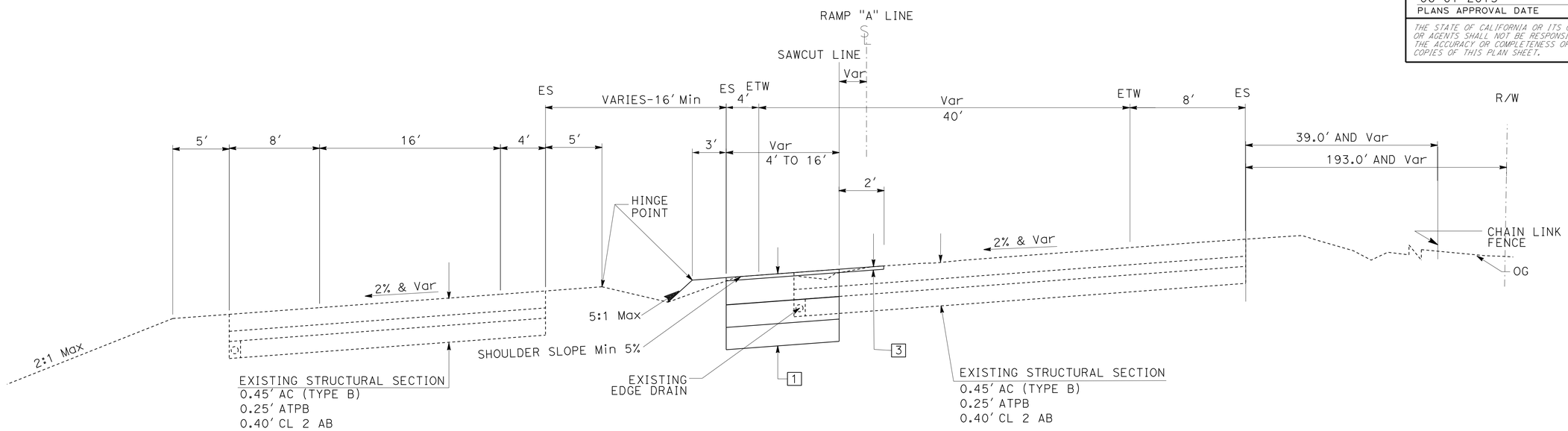

NB ROUTE 73 EXIT RAMP (COLLECTOR)/DISTRIBUTOR
"A" STA 86+89.03 TO "A" STA 87+64.00

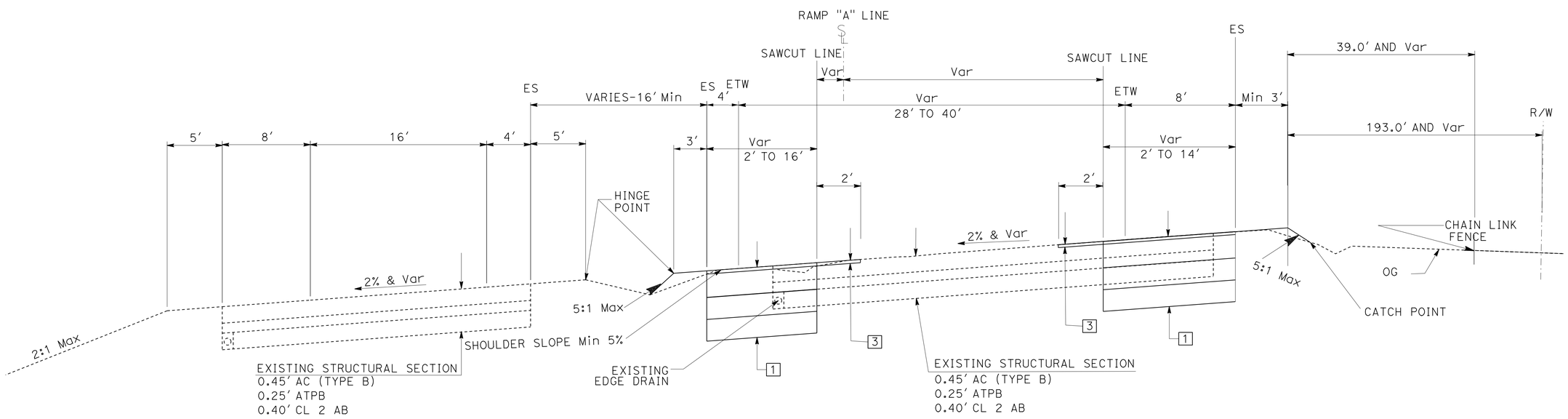

"A" LINES NB ROUTE 73 EXIT RAMP (COLLECTOR)/DISTRIBUTOR
"A" STA 84+66.00 TO STA 86+89.03

TYPICAL CROSS SECTIONS

NO SCALE

X-5

STATE OF CALIFORNIA - DEPARTMENT OF TRANSPORTATION
Caltrans®

FUNCTIONAL SUPERVISOR: MATTHEW CUGINI
CALCULATED-DESIGNED BY: FAZLOLLAH ZIAIE
CHECKED BY: FAZLOLLAH ZIAIE
REVISED BY
DATE REVISED
DESIGN C

LAST REVISION 5-19-15
DATE PLOTTED => 22-SEP-2015
TIME PLOTTED => 10:41

Dist	COUNTY	ROUTE	POST MILES TOTAL PROJECT	SHEET No.	TOTAL SHEETS
12	Ora	73,133	16.6,4.2	7	107

REGISTERED CIVIL ENGINEER 05-26-2015 DATE

06-01-2015
PLANS APPROVAL DATE

REGISTERED PROFESSIONAL ENGINEER FAZLOLLAH ZIAIE No. C59746 Exp.12/31/15 CIVIL STATE OF CALIFORNIA

THE STATE OF CALIFORNIA OR ITS OFFICERS OR AGENTS SHALL NOT BE RESPONSIBLE FOR THE ACCURACY OR COMPLETENESS OF SCANNED COPIES OF THIS PLAN SHEET.

NOTES:

1. FOR ACCURATE RIGHT OF WAY DATA, CONTACT RIGHT OF WAY ENGINEERING AT THE DISTRICT OFFICE.
2. EXACT LOCATION OF TEMPORARY FENCE (TYPE ESA) TO BE DETERMINED BY ENGINEER.

CURVE DATA

No. ⊕	R	Δ	T	L
1	1945′	05°45′32"	97.83′	195.49′
2	558′	27°17′05"	135.43′	265.72′
3	600′	41°10′27"	225.37′	431.18′
4	11147′	07°04′24"	688.93′	1376.11′
5	2000′	13°43′20"	240.65′	479.00′
6	3000′	28°43′00"	767.94′	1503.60′

LEGEND:

ESA

[X] STRUCTURAL SECTION NUMBER

PLACE HMA (Misc Area)

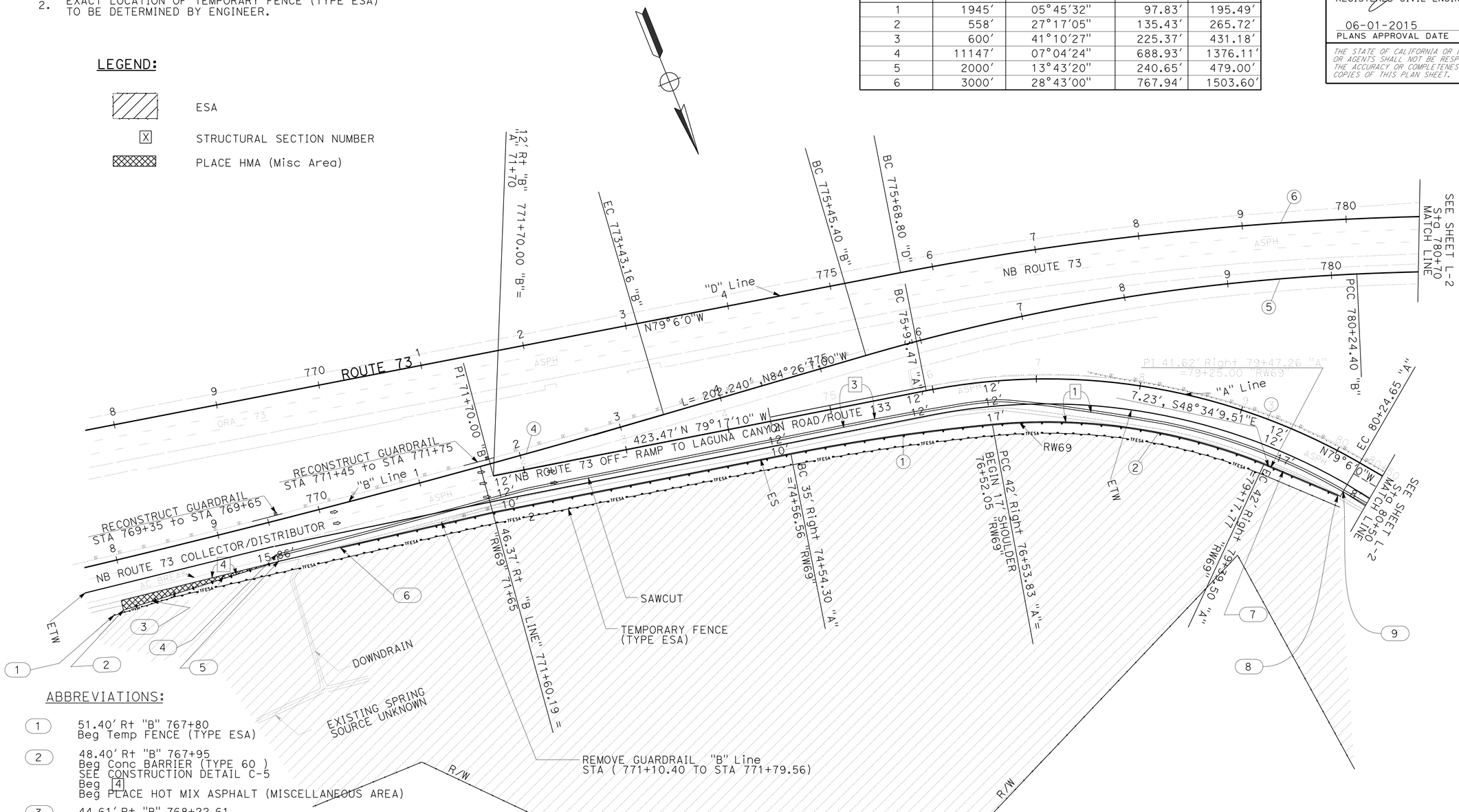

ABBREVIATIONS:

(1) 51.40′ Rt "B" 767+80
Beg Temp FENCE (TYPE ESA)

(2) 48.40′ Rt "B" 767+95
Beg Conc BARRIER (TYPE 60)
SEE CONSTRUCTION DETAIL C-5
Beg [4]
Beg PLACE HOT MIX ASPHALT (MISCELLANEOUS AREA)

(3) 44.61′ Rt "B" 768+22.61
Begin Conc GUTTER
END [4]

(4) 31.70′ Right "B" 769+50
Begin 2′ WIDE [3]
FOR EDGE DRAIN DETAIL SEE SHEET C-3
END PLACE HOT MIX ASPHALT (MISCELLANEOUS AREA)

(5) 38.59′ Rt "B" 769+50
Beg Conc BARRIER (TYPE 60 C)
END Conc BARRIER (TYPE 60)
31.70′ Right Beg [1] and [3]

(6) 40.45′ Rt "B" 769+90.95
Begin RW 69 (SEE STRUCTURE PLAN)
Beg Conc BARRIER (TYPE 60D)
END Conc BARRIER (TYPE 60C)
END Conc GUTTER

(7) 40.51′ Right "A" 79+60.59
END 17′ SHOULDER

(8) END RW69 37.64′ Right "A" 80+22.10
=79+95 "RW69"
END Conc BARRIER (TYPE 60D)
Beg Conc BARRIER (TYPE 60C)

(9) 37.02′ Right "A" 80+24.65
29.02′ Right "A" 80+24.65
END Conc BARRIER (TYPE 60C)
Beg 8′ SHOULDER

LAYOUT

SCALE: 1"=50′

L-1

REVISED BY	DATE REVISED
FAZLOLLAH ZIAIE	FAZLOLLAH ZIAIE

CALCULATED-DESIGNED BY / CHECKED BY

FUNCTIONAL SUPERVISOR: MATTHEW CUGINI

STATE OF CALIFORNIA - DEPARTMENT OF TRANSPORTATION

Caltrans

DESIGN C

LAST REVISION 05-27-15 | DATE PLOTTED => 22-SEP-2015 | TIME PLOTTED => 10:41

Dist	COUNTY	ROUTE	POST MILES TOTAL PROJECT	SHEET No.	TOTAL SHEETS
12	Ora	73,133	16.6,4.2	8	107

REGISTERED CIVIL ENGINEER 05-26-2015 DATE

06-01-2015
PLANS APPROVAL DATE

REGISTERED PROFESSIONAL ENGINEER FAZLOLLAH ZIAIE No. C59746 Exp.12/31/15 CIVIL STATE OF CALIFORNIA

THE STATE OF CALIFORNIA OR ITS OFFICERS OR AGENTS SHALL NOT BE RESPONSIBLE FOR THE ACCURACY OR COMPLETENESS OF SCANNED COPIES OF THIS PLAN SHEET.

NOTES:

1. FOR ACCURATE RIGHT OF WAY DATA, CONTACT RIGHT OF WAY ENGINEERING AT THE DISTRICT OFFICE.

CURVE DATA

No. ⊕	R	Δ	T	L
7	211′	65°00′00"	134.34′	239.22′
8	2947′	21°31′42"	560.26′	1107.31′
9	3000′	21°20′48"	565.41′	1117.70′

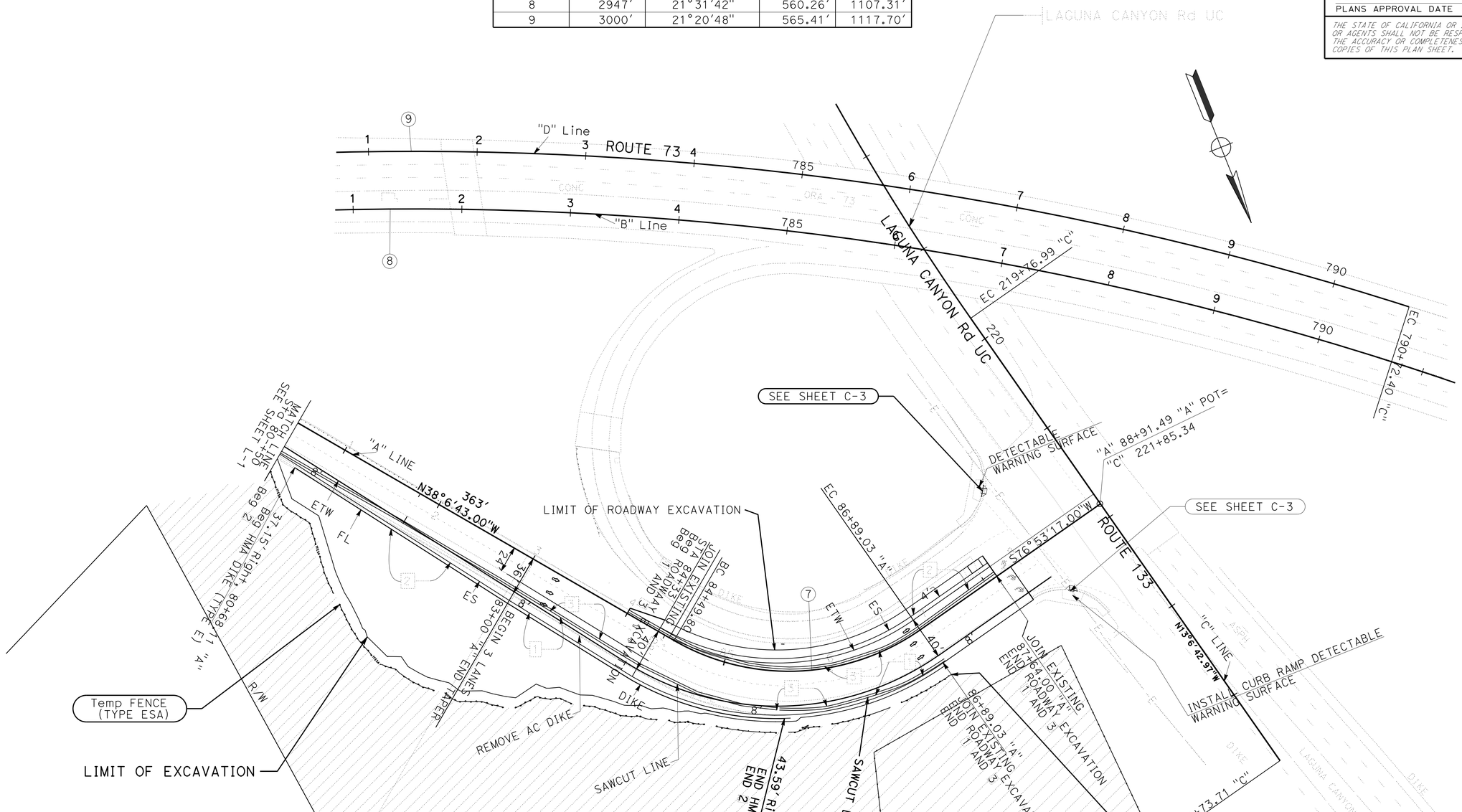

LAYOUT

SCALE: 1"=50′

L-2

STATE OF CALIFORNIA - DEPARTMENT OF TRANSPORTATION
Caltrans
DESIGN C

FUNCTIONAL SUPERVISOR: MATTHEW CUGINI
CALCULATED-DESIGNED BY: FAZLOLLAH ZIAIE
CHECKED BY: FAZLOLLAH ZIAIE
REVISED BY
DATE REVISED

LAST REVISION 05-27-15 | DATE PLOTTED => 22-SEP-2015 | TIME PLOTTED => 10:41

Dist	COUNTY	ROUTE	POST MILES TOTAL PROJECT	SHEET No.	TOTAL SHEETS
12	Ora	73,133	16.6,4.2	9	107

05-26-2015
REGISTERED CIVIL ENGINEER DATE

06-01-2015
PLANS APPROVAL DATE

REGISTERED PROFESSIONAL ENGINEER FAZLOLLAH ZIAIE No. C59746 Exp.12/31/15 CIVIL STATE OF CALIFORNIA

THE STATE OF CALIFORNIA OR ITS OFFICERS OR AGENTS SHALL NOT BE RESPONSIBLE FOR THE ACCURACY OR COMPLETENESS OF SCANNED COPIES OF THIS PLAN SHEET.

NOTES:

1. FOR ACCURATE RIGHT OF WAY DATA, CONTACT RIGHT OF WAY ENGINEERING AT THE DISTRICT OFFICE.

ROADWAY EXCAVATION

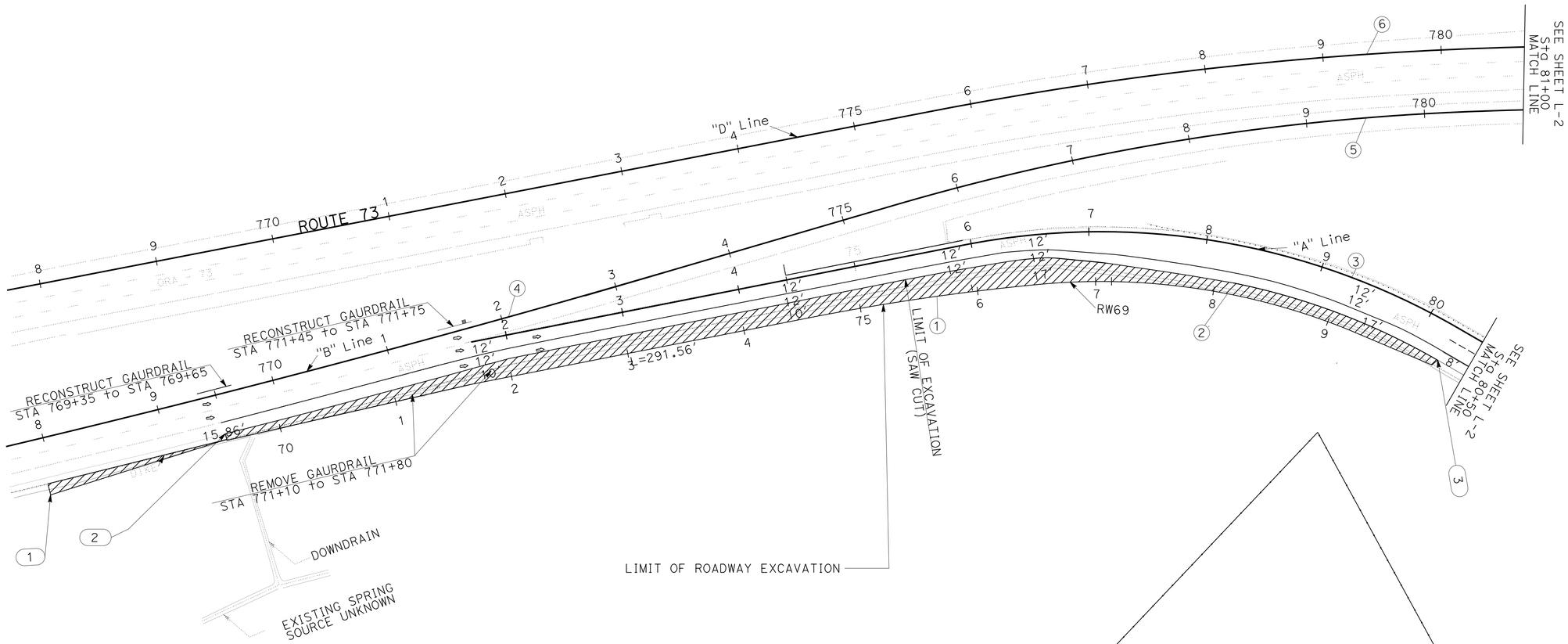

1. 48.40' Rt "B" 767+95
   Beg ROADWAY EXCAVATION
2. 33.70' Right 769+50 "B"
   Beg ROADWAY EXCAVATION
   38.60 Right 769+50 "B"
   END ROADWAY EXCAVATION
3. 32.00' Right 80+24.65 "A"
   END ROADWAY EXCAVATION

CONSTRUCTION DETAIL (REMOVAL PLAN)

SCALE: 1"=50'

C-1

STATE OF CALIFORNIA - DEPARTMENT OF TRANSPORTATION
Caltrans
DESIGN C
FUNCTIONAL SUPERVISOR: MATTHEW CUGINI
CALCULATED-DESIGNED BY: FAZLOLLAH ZIAIE
CHECKED BY: FAZLOLLAH ZIAIE
REVISED BY
DATE REVISED

LAST REVISION 5-27-15
DATE PLOTTED => 22-SEP-2015
TIME PLOTTED => 10:41

Dist	COUNTY	ROUTE	POST MILES TOTAL PROJECT	SHEET No.	TOTAL SHEETS
12	Ora	73,133	16.6,4.2	10	107

REGISTERED CIVIL ENGINEER DATE 05-26-2015

PLANS APPROVAL DATE 06-01-2015

REGISTERED PROFESSIONAL ENGINEER FAZLOLLAH ZIAIE No. C59746 Exp.12/31/15 CIVIL STATE OF CALIFORNIA

THE STATE OF CALIFORNIA OR ITS OFFICERS OR AGENTS SHALL NOT BE RESPONSIBLE FOR THE ACCURACY OR COMPLETENESS OF SCANNED COPIES OF THIS PLAN SHEET.

NOTE:
FOR ACCURATE RIGHT OF WAY DATA, CONTACT RIGHT OF WAY ENGINEERING AT THE DISTRICT OFFICE.

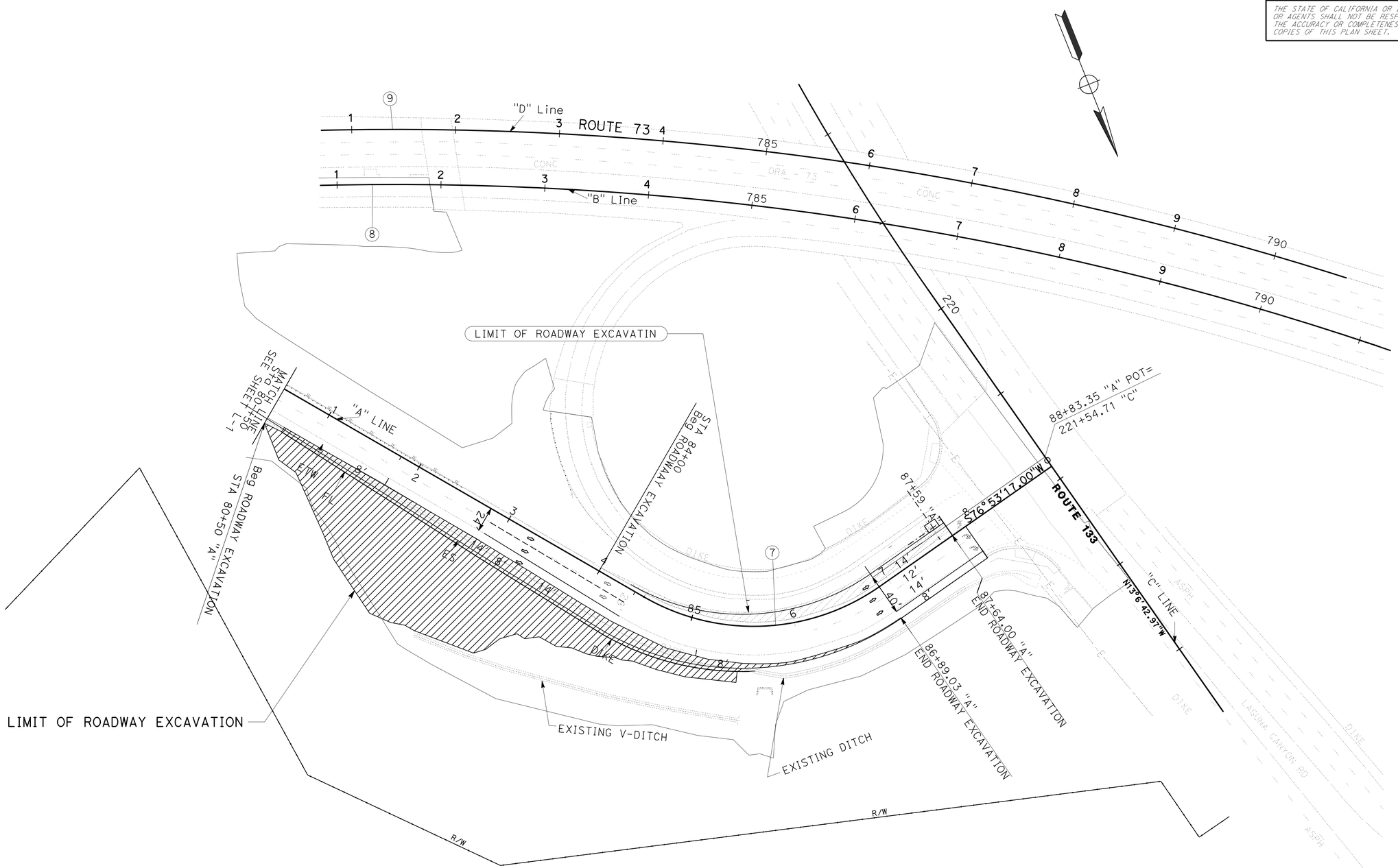

CONSTRUCTION DETAILS (REMOVAL PLAN)

SCALE: 1"=50'

C-2

STATE OF CALIFORNIA - DEPARTMENT OF TRANSPORTATION
Caltrans
DESIGN C
FUNCTIONAL SUPERVISOR MATTHEW CUGINI
CALCULATED-DESIGNED BY FAZLOLLAH ZIAIE
CHECKED BY
REVISED BY
DATE REVISED

LAST REVISION 5-28-15
DATE PLOTTED => 22-SEP-2015
TIME PLOTTED => 10:41

Dist	COUNTY	ROUTE	POST MILES TOTAL PROJECT	SHEET No.	TOTAL SHEETS
12	Ora	73,133	16.6,4.2	11	107

REGISTERED CIVIL ENGINEER 05-26-2015 DATE

06-01-2015
PLANS APPROVAL DATE

REGISTERED PROFESSIONAL ENGINEER FAZOLLAH ZIAIE No. C59746 Exp. 12/31/15 CIVIL STATE OF CALIFORNIA

THE STATE OF CALIFORNIA OR ITS OFFICERS OR AGENTS SHALL NOT BE RESPONSIBLE FOR THE ACCURACY OR COMPLETENESS OF SCANNED COPIES OF THIS PLAN SHEET.

LEGEND:

"B"	ALIGNMENT
+00	STATION
O	(V) VENT, (O) OUTLET, (CL) CLEANOUT
D	TYPE OF OUTLET OR CLEANOUT PER STD PLAN D99B OR D99C
7	LENGTH OF OUTLET, VENT OR CLEANOUT

QUANTITIES

SHEET NO	STATION	3" PLASTIC PIPE (EDGE DRAIN OUTLET)
		LF
L-1	"B" 769+15 TO "B" 769+65	50

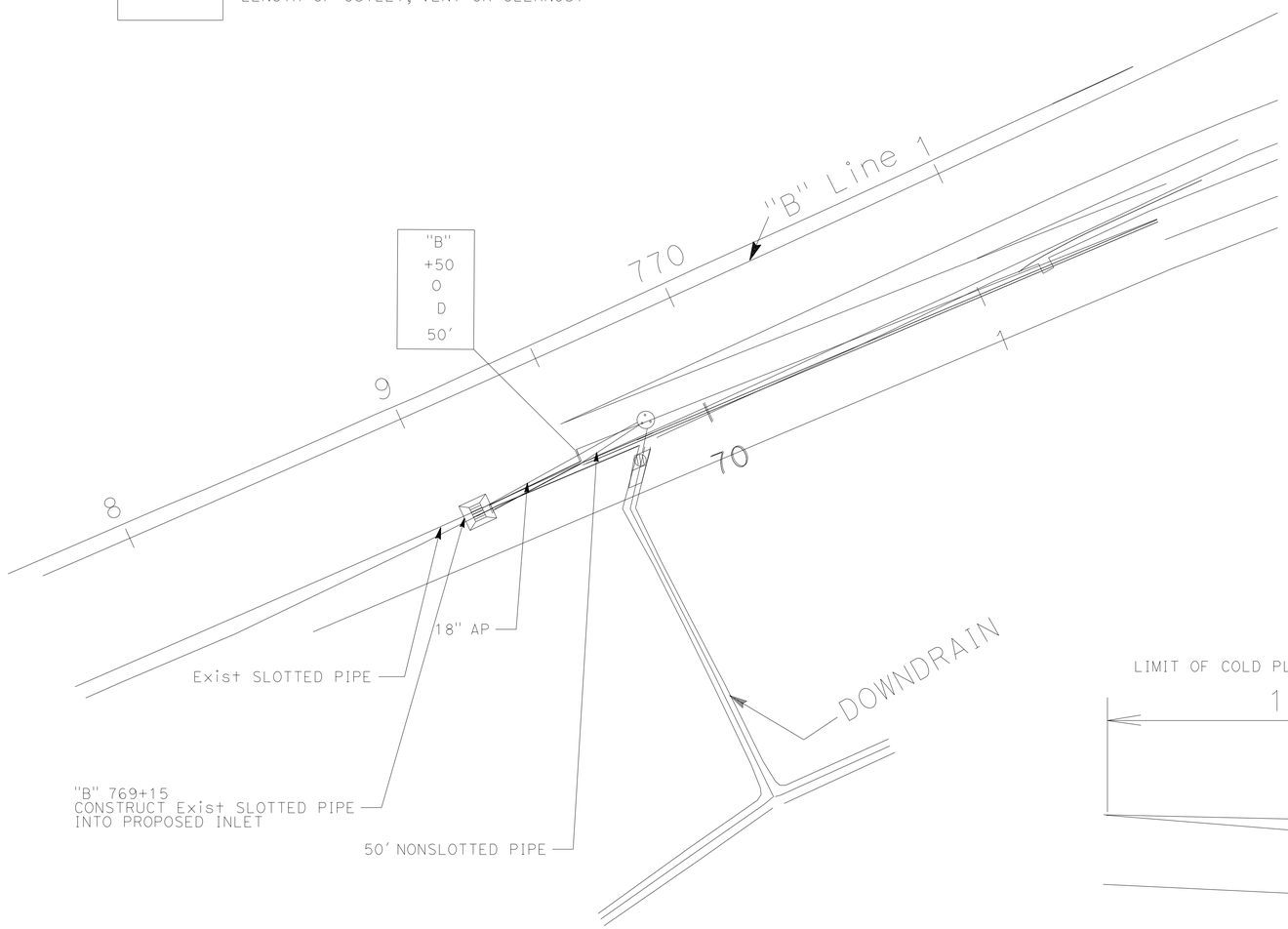

TYPE D EDGE DRAIN OUTLET DETAIL
(SEE STANDARD PLAN D99B)

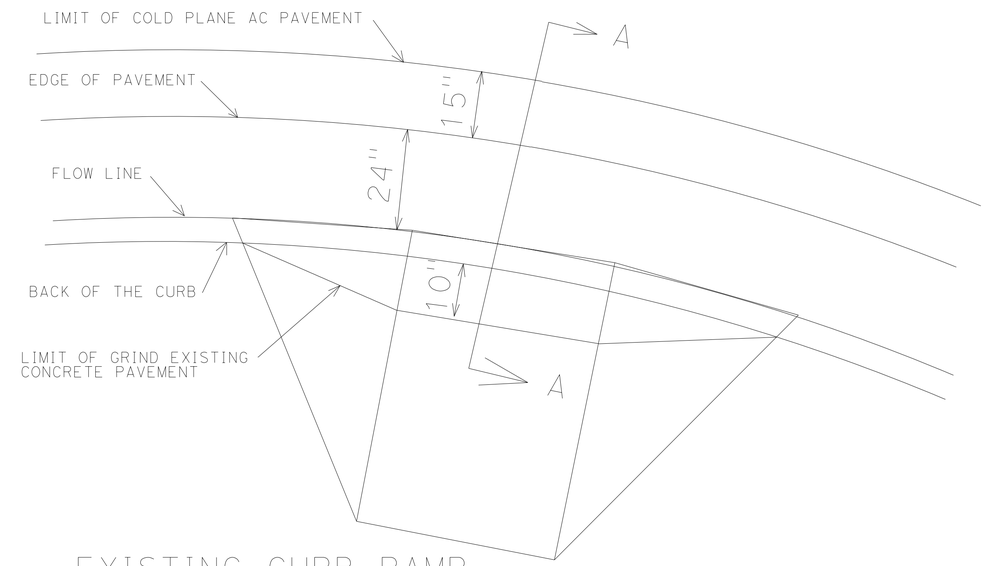

EXISTING CURB RAMP

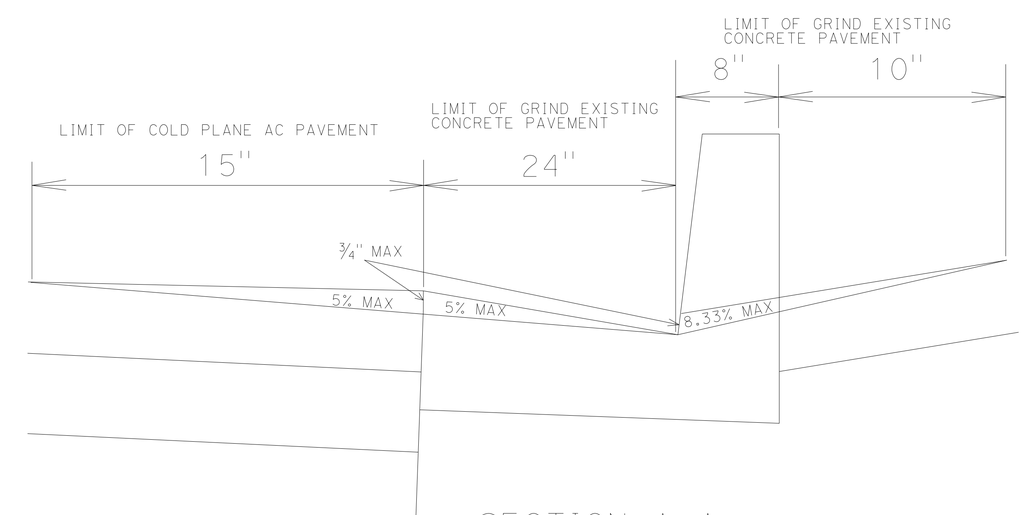

SECTION A-A

CONSTRUCTION DETAIL

NO SCALE

C-3

STATE OF CALIFORNIA - DEPARTMENT OF TRANSPORTATION
Caltrans
DESIGN C
FUNCTIONAL SUPERVISOR: MATTHEW Q. CUGINI
CALCULATED-DESIGNED BY: STEVEN LE
CHECKED BY: V. RAGLAND
REVISED BY
DATE REVISED

LAST REVISION 5-11-15
DATE PLOTTED => 22-SEP-2015
TIME PLOTTED => 10:41

Dist	COUNTY	ROUTE	POST MILES TOTAL PROJECT	SHEET No.	TOTAL SHEETS
12	Ora	73,133	16.6,4.2	12	107

REGISTERED CIVIL ENGINEER DATE 05-26-2015

PLANS APPROVAL DATE 06-01-2015

REGISTERED PROFESSIONAL ENGINEER FAZLOLLAH ZIAIE No. C59746 Exp.12/31/15 CIVIL STATE OF CALIFORNIA

THE STATE OF CALIFORNIA OR ITS OFFICERS OR AGENTS SHALL NOT BE RESPONSIBLE FOR THE ACCURACY OR COMPLETENESS OF SCANNED COPIES OF THIS PLAN SHEET.

NOTES:

1. FOR ACCURATE RIGHT OF WAY DATA, CONTACT RIGHT OF WAY ENGINEERING AT THE DISTRICT OFFICE.
2. EXACT LOCATION OF CONSTRUCTION ENTRANCE, PERMANENT FIBER ROLLS AND PERMANENT GRAVEL BAG BERMS WILL BE DETERMIND BY ENGINEER.
3. EXACT LOCATION OF ESA FENCE TO BE DETERMINED BY ENGINEER.

ABBREVIATION:

ESA ENVIRONMENTALLY SENSETIVE AREA

LEGEND:

TFR TEMPORARY FIBER ROLLS

TGBB TEMPORARY GRAVEL BAG BERM

INLET PROTECTION

CONSTRUCTION ENTRANCE

TEMPORARY WATER POLLUTION CONTROL

SHEET No.	TEMPORARY DRAINAGE INLET PROTECTION	TEMPORARY CONSTRUCTION ENTRANCE	TEMPORARY GRAVEL BAG BERM	TEMPORARY FIBER ROLL	TEMPORARY FENCE (TYPE ESA)
	(EA)	(EA)	(LF)	(LF)	(LF)
WPCP-1	3	3	170	170	1127
WPCP-2	2	4	505	1187	785
TOTAL	5	7	675	1357	1912

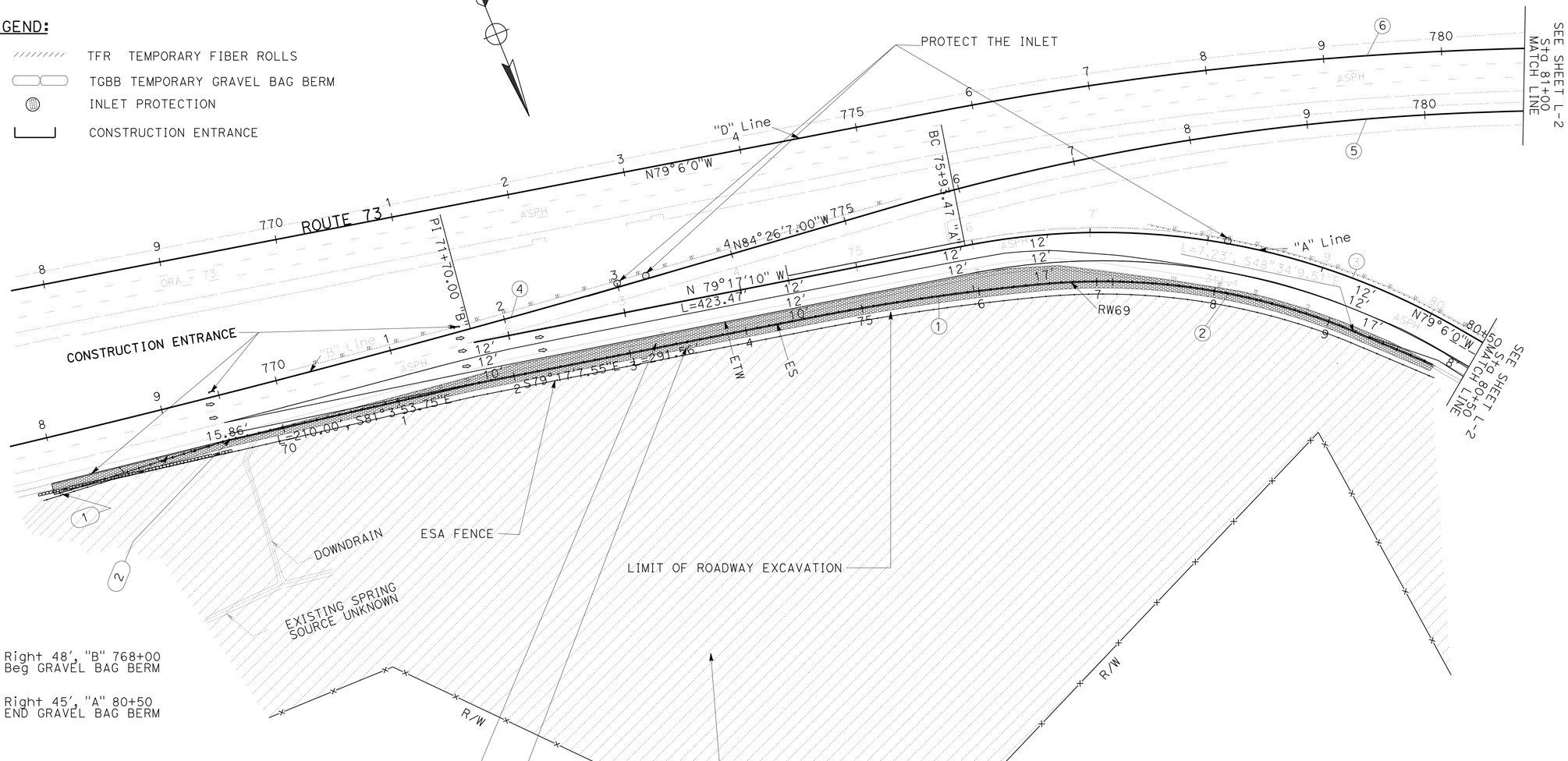

(1) Right 48', "B" 768+00 Beg GRAVEL BAG BERM

(2) Right 45', "A" 80+50 END GRAVEL BAG BERM

APPROVED FOR TEMPORARY WATER POLLUTION CONTROL WORK ONLY

TEMPORARY WATER POLLUTION CONTROL PLAN

SCALE: 1"=50'

WPC-1

STATE OF CALIFORNIA - DEPARTMENT OF TRANSPORTATION

Caltrans

DESIGN C

FUNCTIONAL SUPERVISOR: MATTHEW CUGINI

CALCULATED-DESIGNED BY: FAZLOLLAH ZIAIE

CHECKED BY: FAZLOLLAH ZIAIE

REVISED BY

DATE REVISED

LAST REVISION 5-21-15

DATE PLOTTED => 22-SEP-2015

TIME PLOTTED => 10:41

Dist	COUNTY	ROUTE	POST MILES TOTAL PROJECT	SHEET No.	TOTAL SHEETS
12	Ora	73,133	16.6,4.2	13	107

REGISTERED CIVIL ENGINEER 05-26-2015 DATE

06-01-2015
PLANS APPROVAL DATE

REGISTERED PROFESSIONAL ENGINEER FAZLOLLAH ZIAIE No. C59746 Exp.12/31/15 CIVIL STATE OF CALIFORNIA

THE STATE OF CALIFORNIA OR ITS OFFICERS OR AGENTS SHALL NOT BE RESPONSIBLE FOR THE ACCURACY OR COMPLETENESS OF SCANNED COPIES OF THIS PLAN SHEET.

NOTE:

1. FOR ACCURATE RIGHT OF WAY DATA, CONTACT RIGHT OF WAY ENGINEERING AT THE DISTRICT OFFICE.

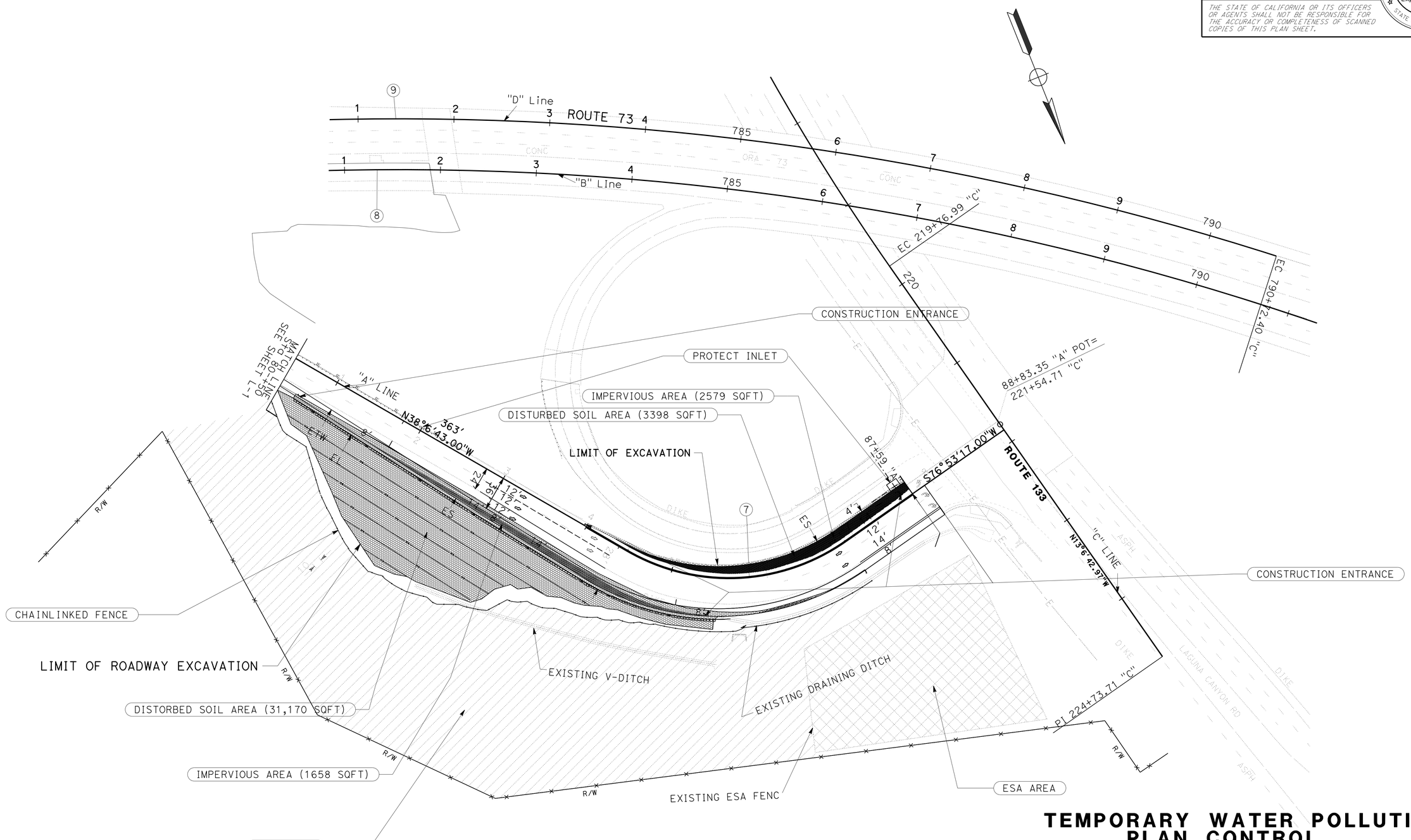

TEMPORARY WATER POLLUTION PLAN CONTROL

SCALE: 1"=50'

APPROVED FOR TEMPORARY WATER POLLUTION CONTROL WORK ONLY

WPC-2

STATE OF CALIFORNIA - DEPARTMENT OF TRANSPORTATION
Caltrans
DESIGN C
FUNCTIONAL SUPERVISOR: MATTHEW CUGINI
CALCULATED-DESIGNED BY: FAZLOLLAH ZIAIE
CHECKED BY: FAZLOLLAH ZIAIE
REVISED BY
DATE REVISED

LAST REVISION 5-26-15
DATE PLOTTED => 22-SEP-2015
TIME PLOTTED => 10:42

Dist	COUNTY	ROUTE	POST MILES TOTAL PROJECT	SHEET No.	TOTAL SHEETS
12	Ora	73,133	16.6,4.2	14	107

REGISTERED CIVIL ENGINEER 05-26-2015 DATE

06-01-2015
PLANS APPROVAL DATE

REGISTERED PROFESSIONAL ENGINEER FAZLOLLAH ZIAIE No. C59746 Exp.12/31/15 CIVIL STATE OF CALIFORNIA

THE STATE OF CALIFORNIA OR ITS OFFICERS OR AGENTS SHALL NOT BE RESPONSIBLE FOR THE ACCURACY OR COMPLETENESS OF SCANNED COPIES OF THIS PLAN SHEET.

NOTE:
FOR ACCURATE RIGHT OF WAY DATA, CONTACT RIGHT OF WAY ENGINEERING AT THE DISTRICT OFFICE.

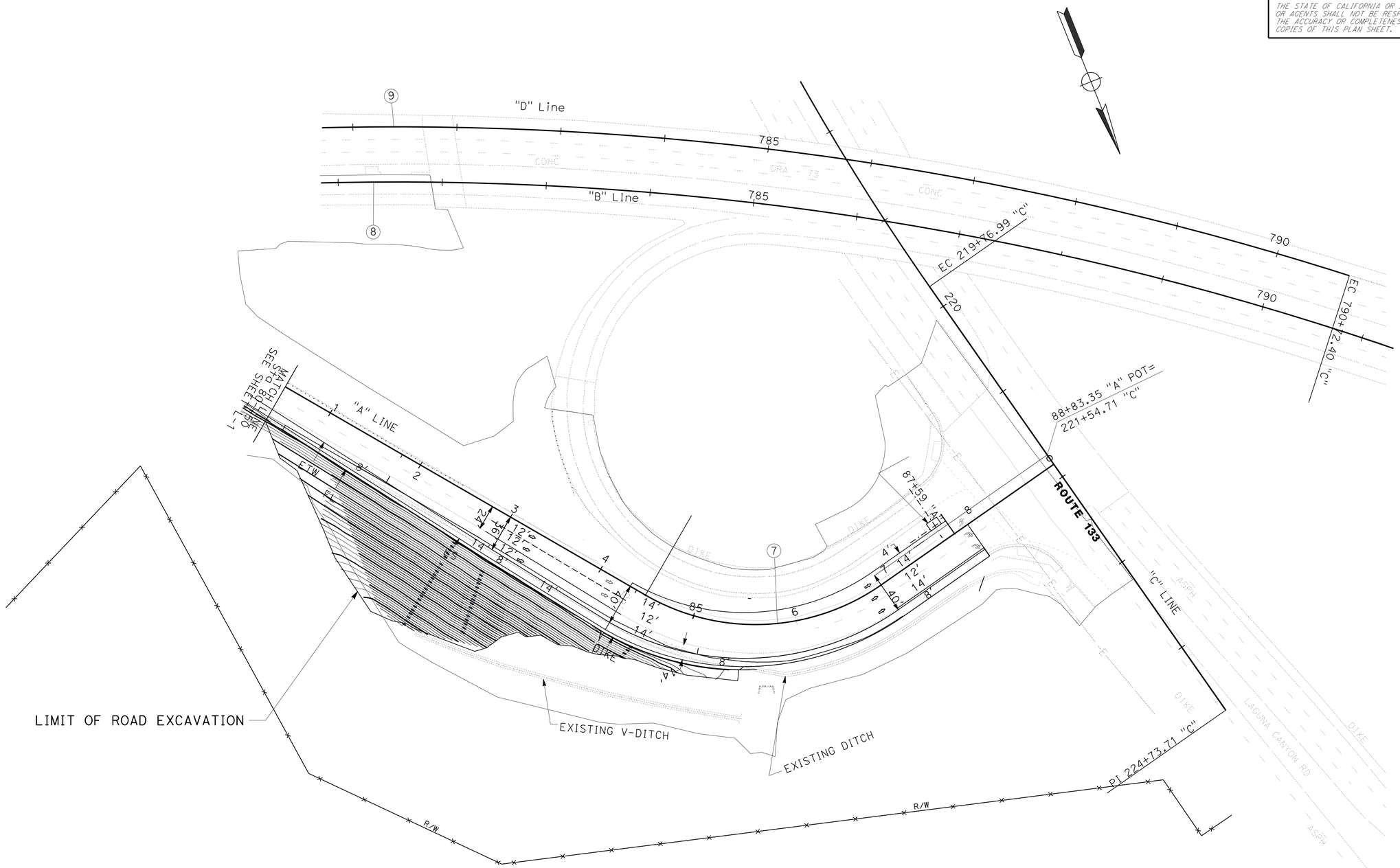

CONTOUR GRADING PLAN

SCALE: 1"=50'

G-1

APPROVED FOR CONTOUR GRADING WORK ONLY

STATE OF CALIFORNIA - DEPARTMENT OF TRANSPORTATION
Caltrans
DESIGN C
FUNCTIONAL SUPERVISOR: MATTHEW CUGINI
CALCULATED-DESIGNED BY: FAZLOLLAH ZIAIE
CHECKED BY: FAZLOLLAH ZIAIE
REVISED BY
DATE REVISED

LAST REVISION 5-10-15
DATE PLOTTED => 22-SEP-2015
TIME PLOTTED => 10:42

Dist	COUNTY	ROUTE	POST MILES TOTAL PROJECT	SHEET No.	TOTAL SHEETS
12	Ora	73,133	16.6,4.2	15	107

REGISTERED CIVIL ENGINEER 05-26-2015 DATE

06-01-2015
PLANS APPROVAL DATE

REGISTERED PROFESSIONAL ENGINEER MY-LINH DUVAN No. C 54928 Exp. 06/30/16 CIVIL STATE OF CALIFORNIA

THE STATE OF CALIFORNIA OR ITS OFFICERS OR AGENTS SHALL NOT BE RESPONSIBLE FOR THE ACCURACY OR COMPLETENESS OF SCANNED COPIES OF THIS PLAN SHEET.

NOTE:

FOR ACCURATE RIGHT OF WAY DATA, CONTACT RIGHT OF WAY ENGINEERING AT THE DISTRICT OFFICE.

ABBREVIATION:

/ WITH

LEGEND:

DRAINAGE SYSTEM No.

DRAINAGE UNIT

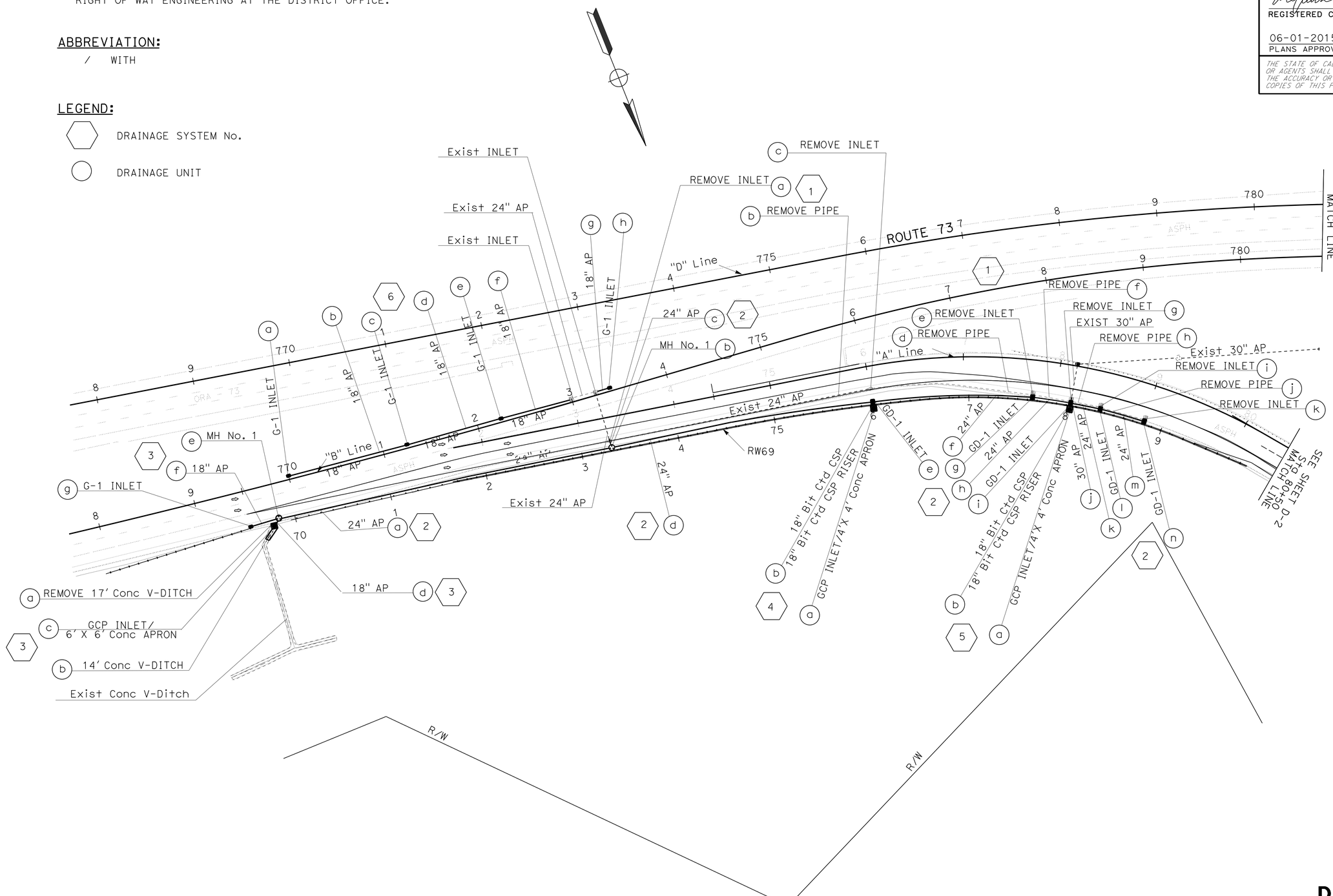

APPROVED FOR DRAINAGE WORK ONLY

DRAINAGE PLAN

SCALE: 1"=50'

D-1

STATE OF CALIFORNIA - DEPARTMENT OF TRANSPORTATION

Caltrans® HYDRAULICS

FUNCTIONAL SUPERVISOR: KATHY LOWE

CALCULATED-DESIGNED BY: MY-LINH DUVAN

CHECKED BY: TAN T NGUYEN

REVISED BY | DATE REVISED

LAST REVISION 05-20-15 | DATE PLOTTED => 22-SEP-2015 | TIME PLOTTED => 10:42

Dist	COUNTY	ROUTE	POST MILES TOTAL PROJECT	SHEET No.	TOTAL SHEETS
12	Ora	73,133	16.6,4.2	16	107

REGISTERED CIVIL ENGINEER 05-26-2015 DATE

06-01-2015
PLANS APPROVAL DATE

REGISTERED PROFESSIONAL ENGINEER
MY-LINH DUVAN
No. C 54928
Exp. 06/30/16
CIVIL
STATE OF CALIFORNIA

THE STATE OF CALIFORNIA OR ITS OFFICERS OR AGENTS SHALL NOT BE RESPONSIBLE FOR THE ACCURACY OR COMPLETENESS OF SCANNED COPIES OF THIS PLAN SHEET.

NOTE:
FOR ACCURATE RIGHT OF WAY DATA, CONTACT RIGHT OF WAY ENGINEERING AT THE DISTRICT OFFICE.

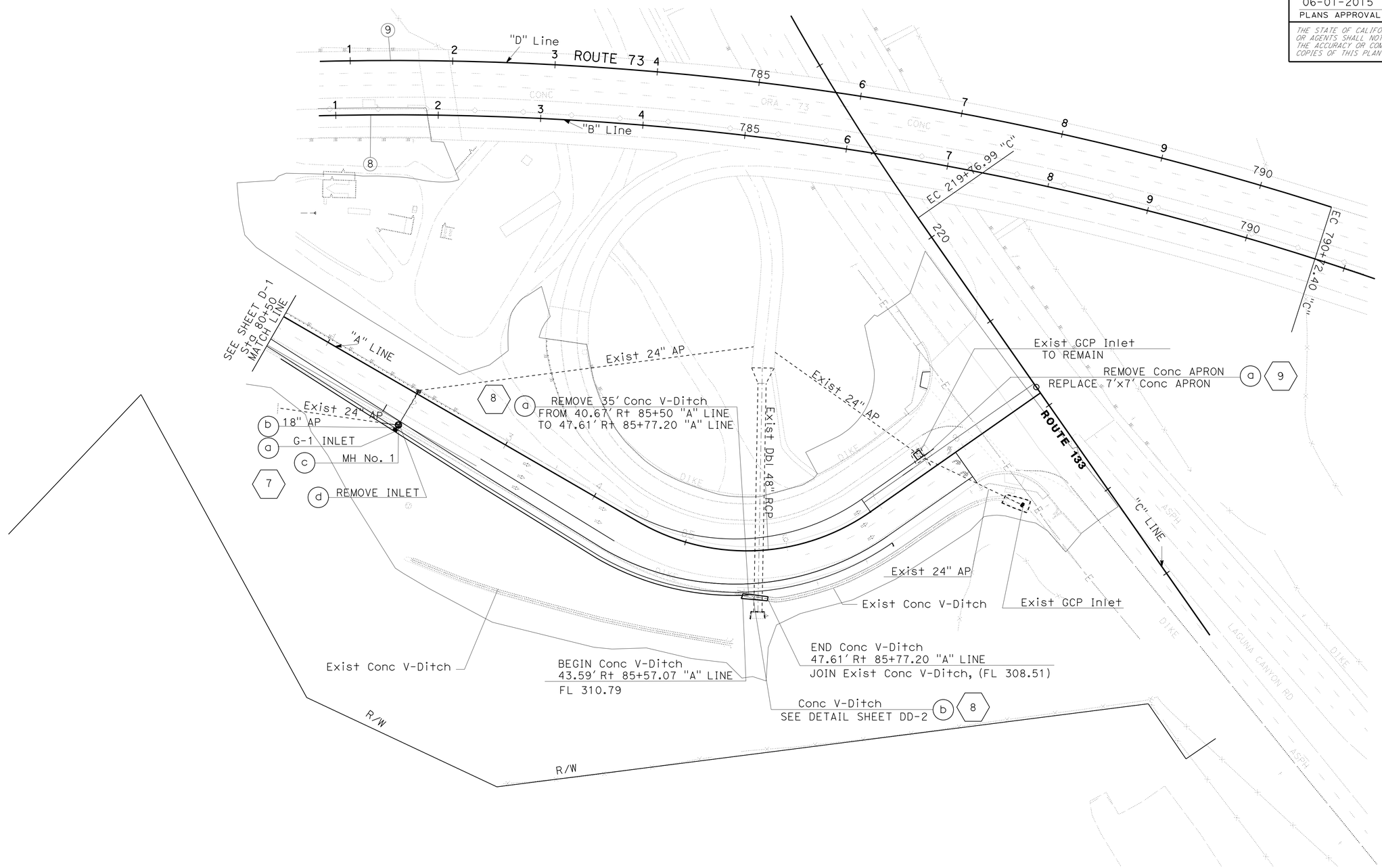

DRAINAGE PLAN

SCALE: 1"=50'

D-2

APPROVED FOR DRAINAGE WORK ONLY

MY-LINH DUVAN | REVISED BY | DATE REVISED
TAN T NGUYEN | CALCULATED-DESIGNED BY | CHECKED BY
KATHY LOWE | FUNCTIONAL SUPERVISOR
STATE OF CALIFORNIA - DEPARTMENT OF TRANSPORTATION
Caltrans
HYDRAULICS

LAST REVISION 05-20-15
DATE PLOTTED => 22-SEP-2015
TIME PLOTTED => 10:42

Dist	COUNTY	ROUTE	POST MILES TOTAL PROJECT	SHEET No.	TOTAL SHEETS
12	Ora	73,133	16.5,16.9	17	107

REGISTERED CIVIL ENGINEER DATE 05-26-2015

06-01-2015
PLANS APPROVAL DATE

REGISTERED PROFESSIONAL ENGINEER MY-LINH DUVAN No. C 54928 Exp.06/30/16 CIVIL STATE OF CALIFORNIA

THE STATE OF CALIFORNIA OR ITS OFFICERS OR AGENTS SHALL NOT BE RESPONSIBLE FOR THE ACCURACY OR COMPLETENESS OF SCANNED COPIES OF THIS PLAN SHEET.

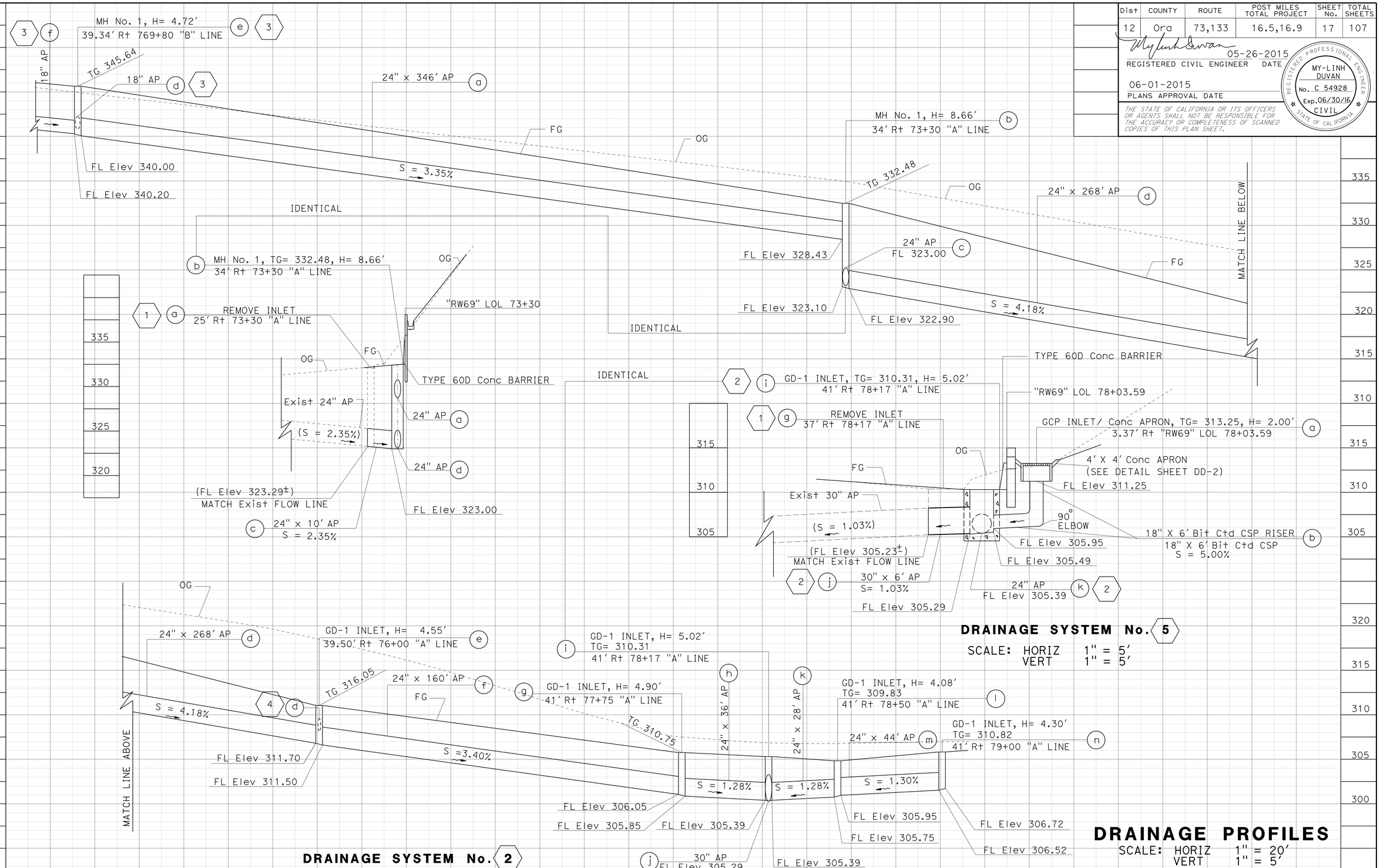

STATION	
CY	Exc
	Emb

TOTAL

REVISED BY | DATE REVISED

MY-LINH DUVAN | TAN T NGUYEN

CALCULATED-DESIGNED BY | CHECKED BY

FUNCTIONAL SUPERVISOR: KATHY LOWE

STATE OF CALIFORNIA - DEPARTMENT OF TRANSPORTATION

Caltrans

HYDRAULICS

LAST REVISION 05-07-15 | DATE PLOTTED => 22-SEP-2015 | TIME PLOTTED => 10:42

Dist	COUNTY	ROUTE	POST MILES TOTAL PROJECT	SHEET No.	TOTAL SHEETS
12	Ora	73,133	16.6,4.2	18	107

REGISTERED CIVIL ENGINEER DATE 05-26-2015

06-01-2015
PLANS APPROVAL DATE

REGISTERED PROFESSIONAL ENGINEER MY-LINH DUVAN No. C 54928 Exp.06/30/16 CIVIL STATE OF CALIFORNIA

THE STATE OF CALIFORNIA OR ITS OFFICERS OR AGENTS SHALL NOT BE RESPONSIBLE FOR THE ACCURACY OR COMPLETENESS OF SCANNED COPIES OF THIS PLAN SHEET.

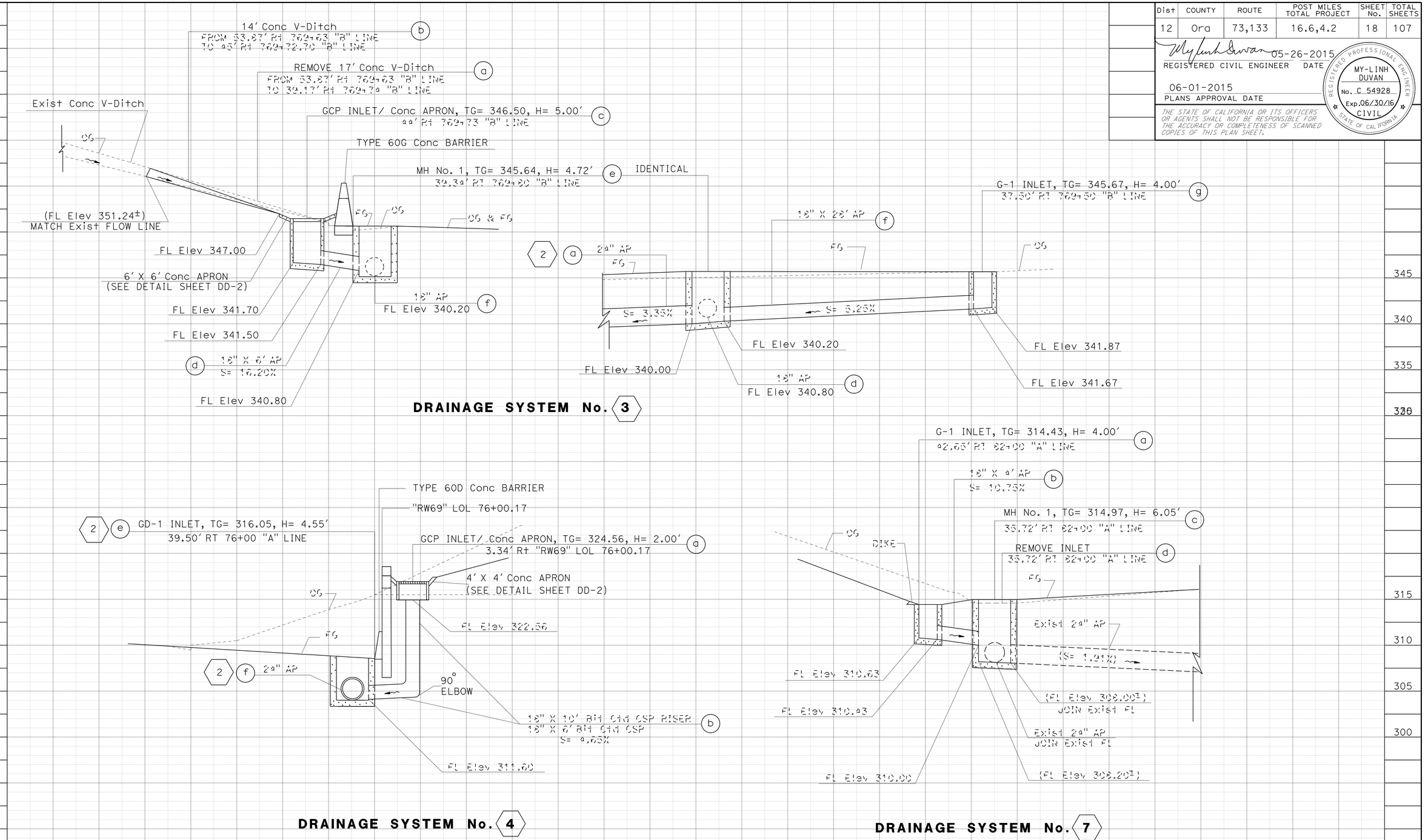

DRAINAGE PROFILES

SCALE: HORIZ 1" = 5'
VERT 1" = 5'

DP-2

STATION | TOTAL
CY Exc
CY Emb

REVISED BY | DATE REVISED
MY-LINH DUVAN | TAN T NGUYEN
CALCULATED-DESIGNED BY | CHECKED BY
FUNCTIONAL SUPERVISOR | KATHY LOWE

STATE OF CALIFORNIA - DEPARTMENT OF TRANSPORTATION
Caltrans
HYDRAULICS

LAST REVISION 05-20-15 | DATE PLOTTED => 22-SEP-2015 | TIME PLOTTED => 10:42

Dist	COUNTY	ROUTE	POST MILES TOTAL PROJECT	SHEET No.	TOTAL SHEETS
12	Ora	73,133	16.6,4.2	19	107

REGISTERED CIVIL ENGINEER DATE 05-26-2015

06-01-2015
PLANS APPROVAL DATE

REGISTERED PROFESSIONAL ENGINEER
MY-LINH DUVAN
No. C 54928
Exp.06/30/16
CIVIL
STATE OF CALIFORNIA

THE STATE OF CALIFORNIA OR ITS OFFICERS OR AGENTS SHALL NOT BE RESPONSIBLE FOR THE ACCURACY OR COMPLETENESS OF SCANNED COPIES OF THIS PLAN SHEET.

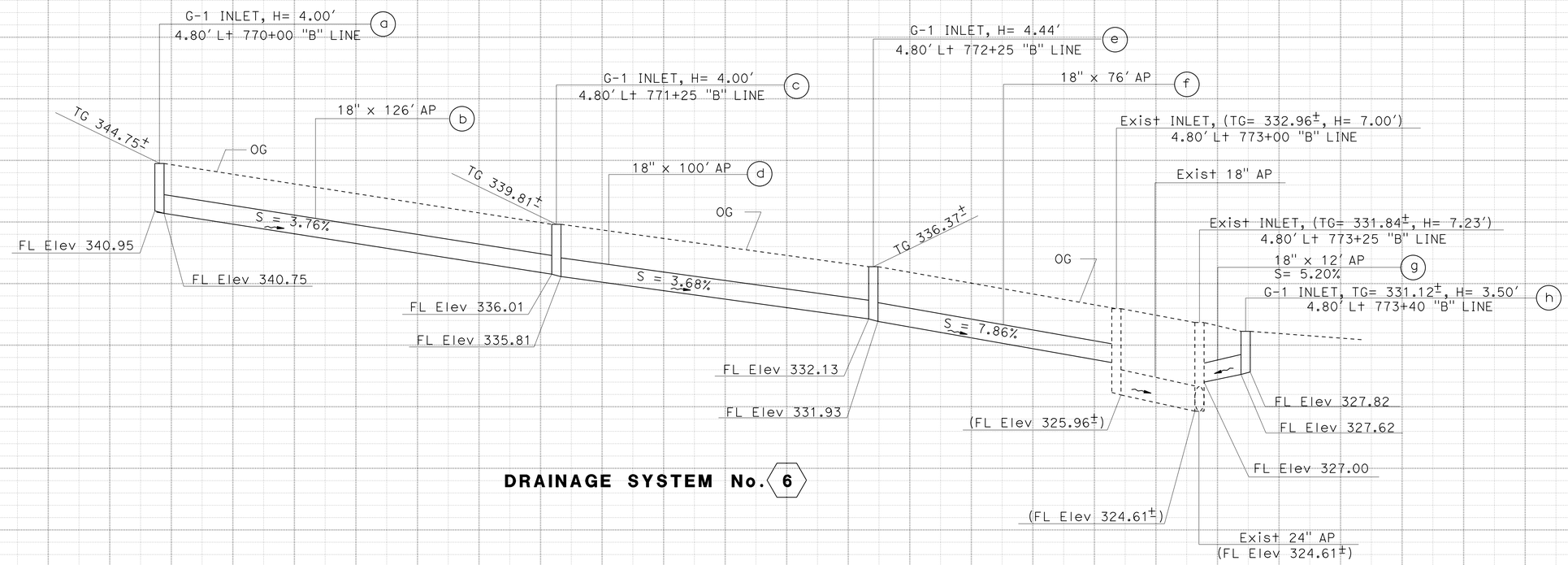

DRAINAGE SYSTEM No. 6

DRAINAGE PROFILES

SCALE: HORIZ 1" = 20′
VERT 1" = 5′

DP-3

STATION		TOTAL
CY	Exc	
	Emb	

STATE OF CALIFORNIA - DEPARTMENT OF TRANSPORTATION
Caltrans
HYDRAULICS

FUNCTIONAL SUPERVISOR: KATHY LOWE
CALCULATED-DESIGNED BY: MY-LINH DUVAN
CHECKED BY: TAN T NGUYEN
REVISED BY
DATE REVISED

LAST REVISION 05-20-15
DATE PLOTTED => 22-SEP-2015
TIME PLOTTED => 10:42

Dist	COUNTY	ROUTE	POST MILES TOTAL PROJECT	SHEET No.	TOTAL SHEETS
12	Ora	73,133	16.6,4.2	20	107

REGISTERED CIVIL ENGINEER 05-26-2015 DATE

06-01-2015
PLANS APPROVAL DATE

REGISTERED PROFESSIONAL ENGINEER
MY-LINH DUVAN
No. C 54928
Exp. 06/30/16
CIVIL
STATE OF CALIFORNIA

THE STATE OF CALIFORNIA OR ITS OFFICERS OR AGENTS SHALL NOT BE RESPONSIBLE FOR THE ACCURACY OR COMPLETENESS OF SCANNED COPIES OF THIS PLAN SHEET.

LEGEND CONTROL POINT

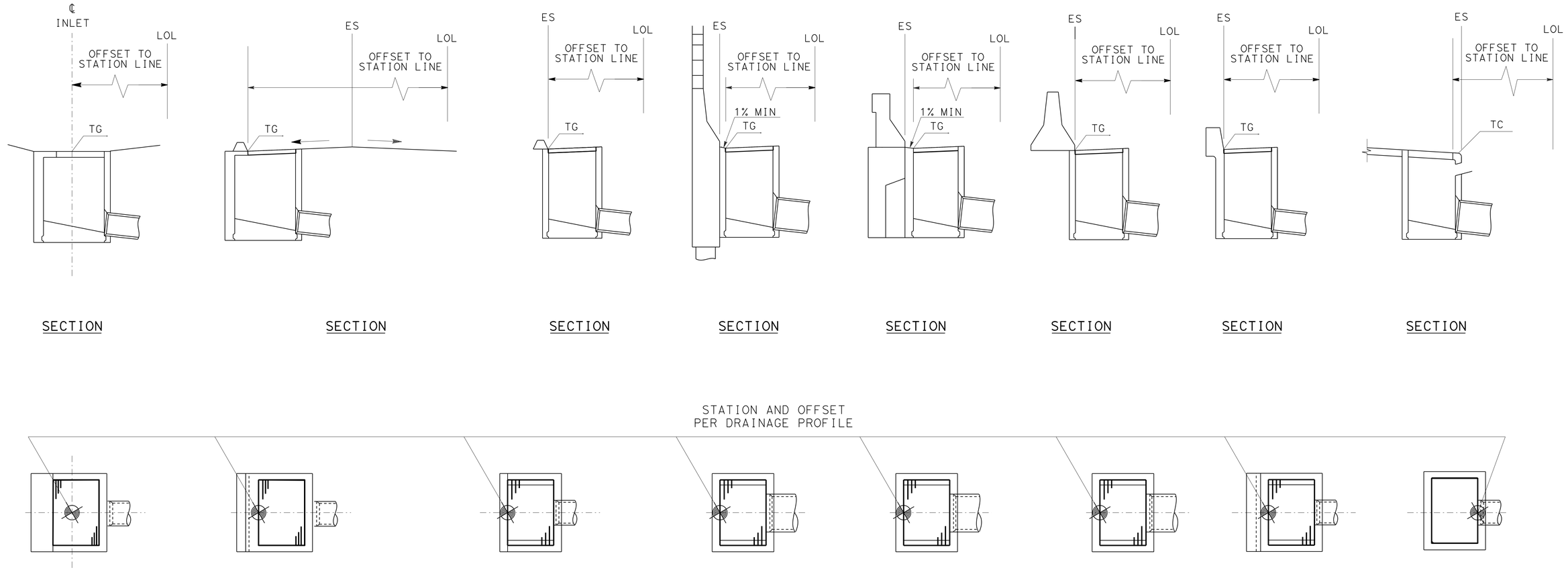

SECTION	SECTION	SECTION	SECTION	SECTION	SECTION	SECTION	SECTION
PLAN	PLAN	PLAN	PLAN	PLAN	PLAN	PLAN	PLAN
FIELD OR MEDIAN INLET	INLET ADJACENT TO SUPERELEVATED SECTION	INLET ADJACENT TO AC DIKE	INLET ADJACENT TO SOUND WALL	INLET ADJACENT TO RETAINING WALL	INLET ADJACENT TO CONCRETE BARRIER	GRATE INLET WITHOUT CURB OPENING	CURB INLET

LAYOUT CONTROL POINT DETAIL

DRAINAGE DETAILS

NO SCALE

DD-1

STATE OF CALIFORNIA - DEPARTMENT OF TRANSPORTATION
Caltrans
HYDRAULICS

FUNCTIONAL SUPERVISOR: KATHY LOWE
CALCULATED-DESIGNED BY: MY-LINH DUVAN
CHECKED BY: TAN T NGUYEN
REVISED BY
DATE REVISED

LAST REVISION 05-20-15
DATE PLOTTED => 22-SEP-2015
TIME PLOTTED => 10:42

Dist	COUNTY	ROUTE	POST MILES TOTAL PROJECT	SHEET No.	TOTAL SHEETS
12	Ora	73,133	16.6,4.2	21	107

REGISTERED CIVIL ENGINEER 05-26-2015 DATE

06-01-2015
PLANS APPROVAL DATE

REGISTERED PROFESSIONAL ENGINEER MY-LINH DUVAN No. C 54928 Exp. 06/30/14 CIVIL STATE OF CALIFORNIA

THE STATE OF CALIFORNIA OR ITS OFFICERS OR AGENTS SHALL NOT BE RESPONSIBLE FOR THE ACCURACY OR COMPLETENESS OF SCANNED COPIES OF THIS PLAN SHEET.

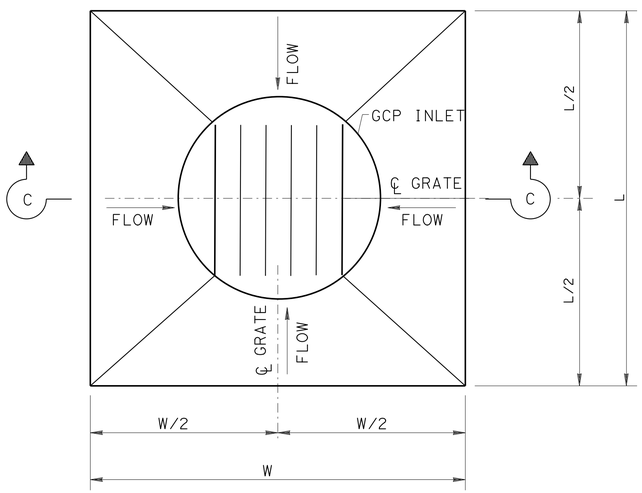

PLAN

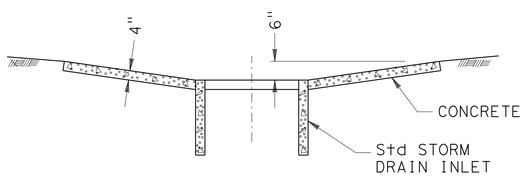

SECTION C-C

CONCRETE APRON

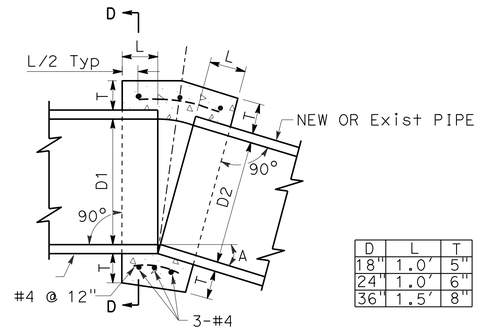

D	L	T
18"	1.0'	5"
24"	1.0'	6"
36"	1.5'	8"

CONCRETE COLLAR

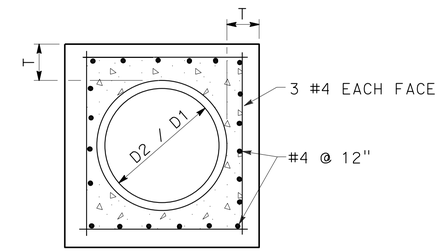

SECTION D-D

NOTES:

1. WHERE PIPES OF DIFFERENT DIAMETERS ARE JOINED WITH A CONCRETE COLLAR, 'L' AND 'T' SHALL BE THOSE OF THE LARGER PIPE. D=D1 OR D2, WHICHEVER IS GREATER.
2. FOR PIPE SIZE NOT LISTED USE NEXT SIZE LARGER.
3. OMIT REINFORCING ON PIPES 24" AND LESS IN DIAMETER AND ON ALL PIPES WHERE ANGLE A IS LESS THAN 10°.
4. JOIN PIPES AT INVERTS.
5. REINFORCEMENT SHALL BE PLACED 1½" CLEAR FROM OUTSIDE DIAMETER OF PIPE.

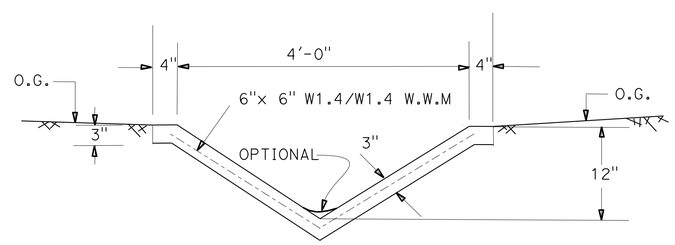

CONCRETE V-DITCH TYPICAL CROSS-SECTION

NOTES:

1. CONCRETE SHALL HAVE A MINIMUM ULTIMATE COMPRESSIVE STRENGTH AT 28 DAYS OF 2500 P.S.I
2. REINFORCING SHALL BE 6"x6" - W1.4xW1.4 WELDED WIRE MESH (WWM) OR APPROVED EQUAL.

DRAINAGE DETAILS

NO SCALE

DD-2

STATE OF CALIFORNIA - DEPARTMENT OF TRANSPORTATION
Caltrans
HYDRAULICS

FUNCTIONAL SUPERVISOR: KATHY LOWE
CALCULATED-DESIGNED BY: MY-LINH DUVAN
CHECKED BY: TAN T NGUYEN
REVISED BY
DATE REVISED

LAST REVISION 05-20-15
DATE PLOTTED => 22-SEP-2015
TIME PLOTTED => 10:42

Dist	COUNTY	ROUTE	POST MILES TOTAL PROJECT	SHEET No.	TOTAL SHEETS
12	Ora	73,133	16.6,4.2	22	107

REGISTERED CIVIL ENGINEER 05-26-2015 DATE

06-01-2015
PLANS APPROVAL DATE

REGISTERED PROFESSIONAL ENGINEER MY-LINH DUVAN No. C 54928 Exp. 06/30/16 CIVIL STATE OF CALIFORNIA

THE STATE OF CALIFORNIA OR ITS OFFICERS OR AGENTS SHALL NOT BE RESPONSIBLE FOR THE ACCURACY OR COMPLETENESS OF SCANNED COPIES OF THIS PLAN SHEET.

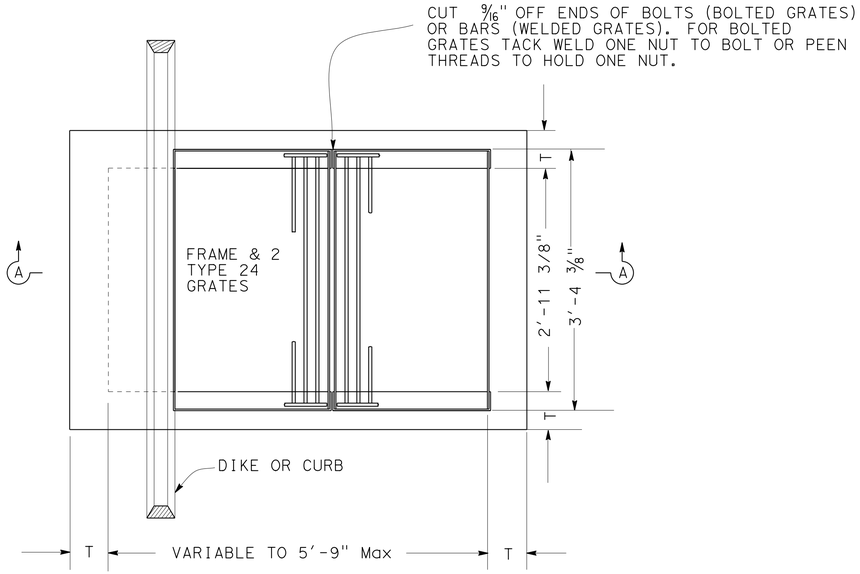

PLAN

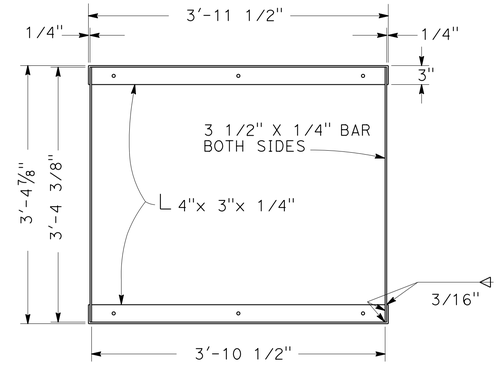

GRATE FRAME DETAIL

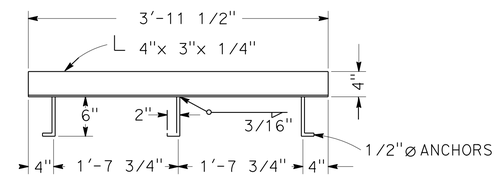

ANCHOR PLACEMENT DETAIL

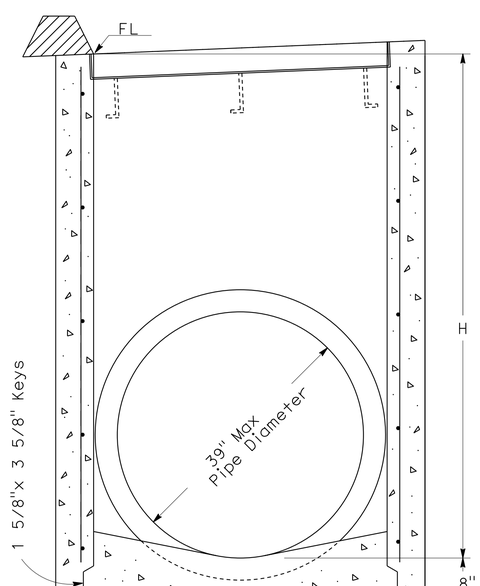

SECTION A-A

(FOR PIPE DIAMETERS 39" OR LESS)

GD-1

NOTES

1. 'H' IS THE DIFFERENCE IN ELEVATION BETWEEN THE OUTLET PIPE FLOW LINE AND THE FLOW LINE OF THE GRATES.
2. STEPS - NONE REQUIRED WHEN 'H' IS 3'-6" OR LESS. INSTALL ONE STEP 16"± ABOVE FLOOR WHEN 'H' IS MORE THAN 3'-6" AND LESS THAN 5'-0". WHERE 'H' IS MORE THAN 5'-0" STEPS SHALL BE EVENLY SPACED @ 12"± INTERVALS FROM 16"± ABOVE FLOOR TO WITHIN 12"± OF THE TOP OF THE BOX. PLACE STEPS IN WALL WITHOUT PIPE OPENINGS. SEE STANDARD PLAN D74C FOR STEP DETAIL.
3. PIPE(S) CAN BE PLACED IN ANY WALL.
4. REINFORCING STEEL NOT REQUIRED IN WALLS WHEN H=6' OR LESS.
5. REINFORCING STEEL IN WALLS SHALL BE #4 BARS @ 18"+ CENTERS PLACED 1½" CLEAR TO INSIDE OF BOX.
6. BASIN FLOORS SHALL HAVE WOOD TROWEL FINISH AND A MINIMUM SLOPE OF 4:1 FROM ALL DIRECTIONS TOWARD OUTLET PIPE.

MISCELLANEOUS IRON & STEEL

INLET TYPE	GRATE TYPE	WEIGHT
GD-1	24 - 12	580

H	T
8'-0" OR LESS	6"
8'-1" TO 20'- 0"	8"

DRAINAGE DETAILS

NO SCALE

DD-3

STATE OF CALIFORNIA - DEPARTMENT OF TRANSPORTATION
Caltrans HYDRAULICS

FUNCTIONAL SUPERVISOR: KATHY LOWE

CALCULATED-DESIGNED BY: MY-LINH DUVAN
CHECKED BY: TAN T NGUYEN

REVISED BY / DATE REVISED

LAST REVISION 05-20-15 | DATE PLOTTED => 22-SEP-2015 | TIME PLOTTED => 10:42

Dist	COUNTY	ROUTE	POST MILES TOTAL PROJECT	SHEET No.	TOTAL SHEETS
12	Ora	73,133	16.6,4.2	23	107

REGISTERED CIVIL ENGINEER 05-26-2015 DATE

06-01-2015
PLANS APPROVAL DATE

REGISTERED PROFESSIONAL ENGINEER MY-LINH DUVAN No. C 54928 Exp. 06/30/16 CIVIL STATE OF CALIFORNIA

THE STATE OF CALIFORNIA OR ITS OFFICERS OR AGENTS SHALL NOT BE RESPONSIBLE FOR THE ACCURACY OR COMPLETENESS OF SCANNED COPIES OF THIS PLAN SHEET.

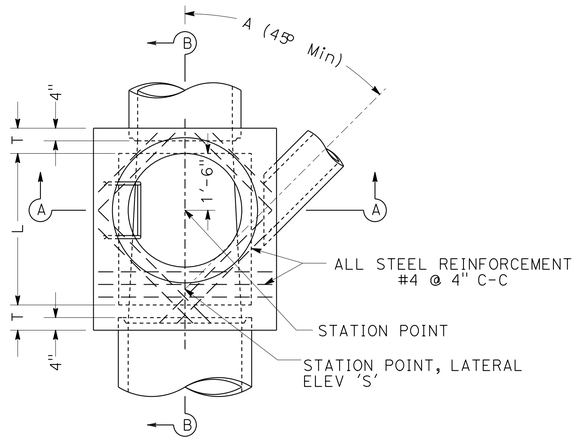

PLAN
(SHAFT NOT SHOWN)

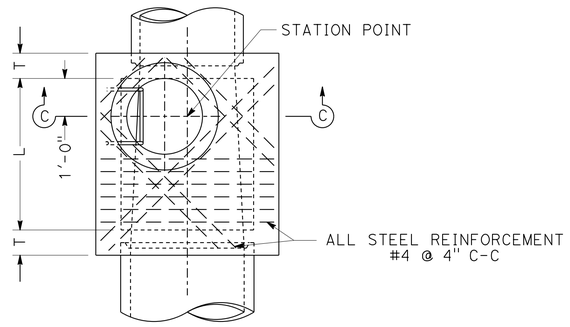

PLAN
DETAIL N
(SHAFT NOT SHOWN)

NOTES

1. HEIGHT 'H' (IN SEC A-A AND SEC B-B) SHALL BE NOT LESS THAN 4'-8", BUT MAY BE INCREASED PROVIDED THAT THE VALUE OF 'M' SHALL BE NOT LESS THAN THE MINIMUM SPECIFIED AND THAT THE REDUCER SHALL BE USED. FOR 'H' (IN SEC C-C) SEE NOTE 4.
2. LENGTH 'L' SHALL BE 4' UNLESS OTHERWISE SHOWN ON DRAINAGE PLAN.
3. SHAFT SHALL BE CONSTRUCTED AS PER SEC C-C AND DETAIL N WHEN DEPTH 'M' FROM STREET GRADE TO TOP OF BOX IS LESS THAN 2'-10 1/2" FOR PAVED STREETS OR 3'-6" FOR UNPAVED STREETS.
4. DEPTH 'P' MAY BE REDUCED TO AN ABSOLUTE LIMIT OF 6" WHEN LARGER VALUES OF 'P' WOULD REDUCE 'H' (IN SEC C-C) TO 3'-6" OR LESS.
5. 'T' SHALL BE 8" FOR VALUES OF 'H' UP TO AND INCLUDING 8'. 'T' SHALL BE 10" FOR VALUES OF 'H' OVER 8'.
6. LOWEST STEP SHALL BE NOT MORE THAN 12" ABOVE THE LEDGE AT THE SIDE OF MANHOLE FLOOR.
7. BODY OF MANHOLE SHALL BE POURED IN ONE CONTINUOUS OPERATION, EXCEPT THAT THE CONTRACTOR SHALL HAVE THE OPTION OF PLACING AT THE SPRING LINE A CONSTRUCTION JOINT WITH A LONGITUDINAL KEYWAY.
8. REINFORCING STEEL SHALL BE 2" CLEAR FROM FACE OF CONCRETE.
9. FLOOR OF MANHOLE SHALL BE STEEL-TROWELED TO SPRING LINE.
10. RINGS, REDUCER, AND PIPE FOR ACCESS SHAFT SHALL BE SEATED IN 1:2 CEMENT MORTAR AND NEATLY POINTED OR WIPED INSIDE SHAFT.
11. MANHOLE FRAME AND COVER PER STANDARD PLAN B7-11 DETAIL 'U45'.
12. STEP DETAIL PER STANDARD PLANS D74C.
13. MAXIMUM EARTH COVER IS 10'.

DRAINAGE SYSTEM No. ⬡	DRAINAGE UNIT ○	H (FT)	L (FT)	M or P (FT)	Elev "S"	Elev "A"	Elev "B"
2	b	8.66	4.0	0.92	323.00	323.10	322.90
3	e	4.72	4.00	0.92	340.52	340.20	340.00
7	c	6.05	4.00	0.92	309.81	308.20	308.00

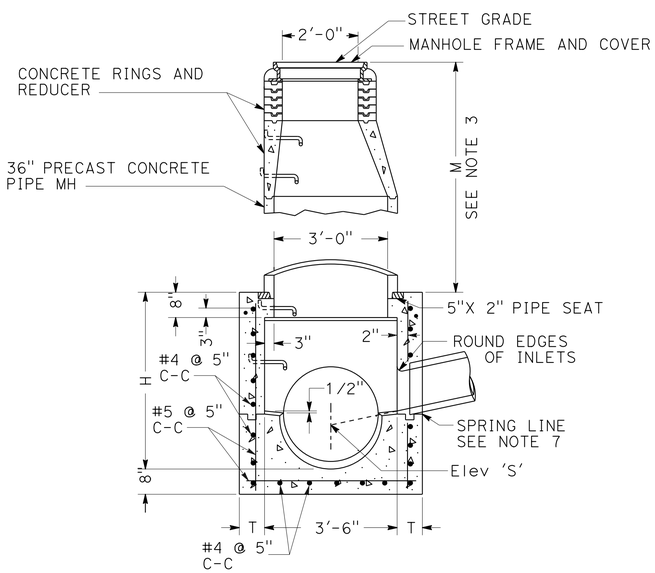

SECTION A-A

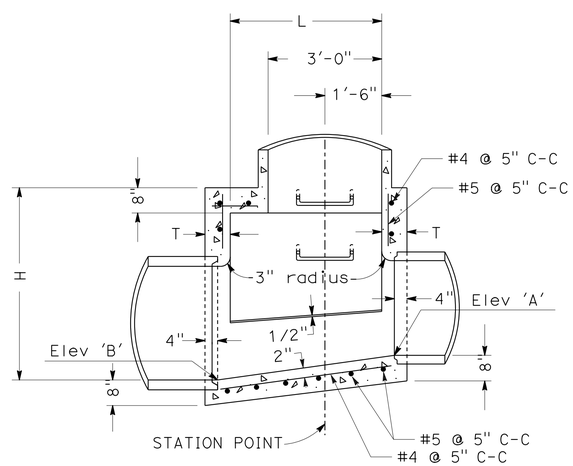

SECTION B-B

MANHOLE No. 1 (MH No. 1)

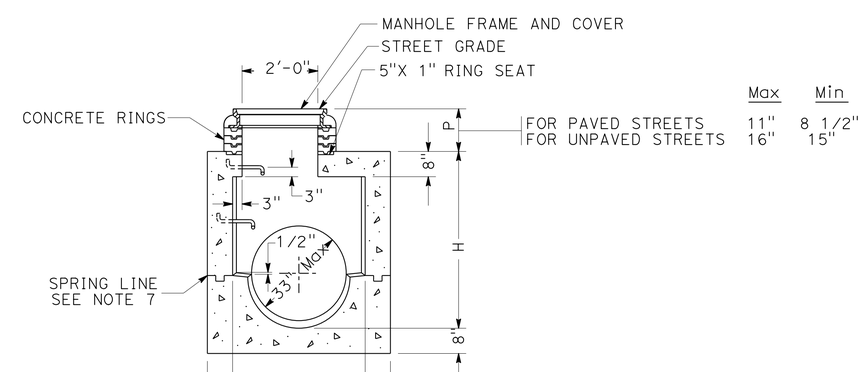

	Max	Min
FOR PAVED STREETS	11"	8 1/2"
FOR UNPAVED STREETS	16"	15"

SECTION C-C

DRAINAGE DETAILS
NO SCALE

DD-4

STATE OF CALIFORNIA - DEPARTMENT OF TRANSPORTATION
Caltrans HYDRAULICS

FUNCTIONAL SUPERVISOR: KATHY LOWE
CALCULATED-DESIGNED BY: MY-LINH DUVAN
CHECKED BY: TAN T NGUYEN
REVISED BY / DATE REVISED

LAST REVISION 05-20-15 | DATE PLOTTED => 22-SEP-2015 | TIME PLOTTED => 10:42

Dist	COUNTY	ROUTE	POST MILES TOTAL PROJECT	SHEET No.	TOTAL SHEETS
12	Ora	73,133	16.6,4.2	24	107

REGISTERED CIVIL ENGINEER DATE 05-26-2015

06-01-2015
PLANS APPROVAL DATE

REGISTERED PROFESSIONAL ENGINEER MY-LINH DUVAN No. C 54928 Exp.06/30/16 CIVIL STATE OF CALIFORNIA

THE STATE OF CALIFORNIA OR ITS OFFICERS OR AGENTS SHALL NOT BE RESPONSIBLE FOR THE ACCURACY OR COMPLETENESS OF SCANNED COPIES OF THIS PLAN SHEET.

ALTERNATIVE PIPE CULVERTS
ALLOWABLE PIPE MATERIAL

DESIGNATION	RCP	CSP		PLASTIC PIPE	
	Size (in)	THICK (IN)	Bit Ctd	PVC	HDPE
18" APC	18"	0.079	YES	18"	18"

ABBREVIATIONS

HDPE HIGH DENSITY POLYETHYLENE
S STANDARD JOINT TYPE
D DOWNDRAIN JOINT TYPE
/ WITH

(N) NOT A SEPERATE PAY ITEM, FOR INFORMATION ONLY

DRAINAGE QUANTITIES

DRAINAGE SYSTEM NUMBER	DRAINAGE UNIT	MINOR CONCRETE (MINOR STRUCTURE) CY	MISCELLANEOUS IRON AND STEEL LB	FRAME & GRATE (24-12) (N) EA	FRAME & GRATE (36R) (N) EA	MANHOLE FRAME & COVER (N) EA	36" PRECAST CONCRETE PIPE MANHOLE LF	REMOVE INLET EA	REMOVE PIPE LF	REMOVE CONCRETE (CHANNEL) LF	REMOVE CONCRETE (Misc) CY	18" ALTERNATIVE PIPE CULVERT LF	24" ALTERNATIVE PIPE CULVERT LF	30" ALTERNATIVE PIPE CULVERT LF	18" Bit Ctd CSP RISER (0.079" THICK) LF	18" Bit Ctd CSP (0.079" THICK) LF	CONCRETE (CHANNEL LINING) CY	DITCH EXCAVATION CY	PIPE JOINT CLASSIFICATION S	MAXIMUM COVER LF	"V" OR "H" LF	DESCRIPTION	STATION	DRAINAGE UNIT	DRAINAGE SYSTEM NUMBER
1	a							1														REMOVE INLET	25' Rt 73+30 "A" LINE	a	1
	b								272													REMOVE PIPE		b	
	c							1														REMOVE INLET	25' Rt 76+00 "A" LINE	c	
	d								172													REMOVE PIPE		d	
	e							1														REMOVE INLET	37' Rt 77+75 "A" LINE	e	
	f								39													REMOVE PIPE		f	
	g							1														REMOVE INLET	37' Rt 78+17 "A" LINE	g	
	h								30													REMOVE PIPE		h	
	i							1														REMOVE INLET	37' Rt 78+50 "A" LINE	i	
	j								47													REMOVE PIPE		j	
	k							1														REMOVE INLET	37' Rt 79+00 "A" LINE	k	
2	a												346						S	3.64		24" X 346' AP		a	2
	b	6.83	435			1															8.66	MANHOLE No. 1	34' Rt 73+30 "A" LINE	b	
	c												10						S	7.58		24" X 10' AP		c	
	d												268						S	7.58		24" X 268' AP		d	
	e	1.80	580	2																	4.55	GD- 1 INLET	39.50' Rt 76+00 "A" LINE	e	
	f												160						S	2.70		24" X 160' AP		f	
	g	1.90	580	2																	4.90	GD-1 INLET	41' Rt 77+75 "A" LINE	g	
	h												36						S	2.92		24" X 36' AP		h	
	i	1.94	580	2																	5.02	GD-1 INLET	41' Rt 78+17 "A" LINE	i	
	j													6					S	2.77		30" X 6' AP		j	
	k												28						S	2.92		24" X 28' AP		k	
	l	1.66	580	2																	4.08	GD-1 INLET	41' Rt 78+50 "A" LINE	l	
	m												44						S	2.30		24" X 44' AP		m	
	n	1.73	580	2																	4.30	GD-1 INLET	41' Rt 79+00 "A" LINE	n	
SHEET TOTAL		15.86	3,335	10		1		6	560				892	6											

DRAINAGE QUANTITIES

DQ-1

MY-LINH DUVAN | REVISED BY
TAN T NGUYEN | DATE REVISED
CALCULATED-DESIGNED BY
CHECKED BY
FUNCTIONAL SUPERVISOR
KATHY LOWE

STATE OF CALIFORNIA - DEPARTMENT OF TRANSPORTATION
Caltrans
HYDRAULICS

LAST REVISION 05-20-15 | DATE PLOTTED => 22-SEP-2015 | TIME PLOTTED => 10:42

Dist	COUNTY	ROUTE	POST MILES TOTAL PROJECT	SHEET No.	TOTAL SHEETS
12	Ora	73,133	16.6,4.2	25	107

REGISTERED CIVIL ENGINEER 05-26-2015 DATE

06-01-2015
PLANS APPROVAL DATE

REGISTERED PROFESSIONAL ENGINEER MY-LINH DUVAN No. C 54928 Exp. 06/30/16 CIVIL STATE OF CALIFORNIA

THE STATE OF CALIFORNIA OR ITS OFFICERS OR AGENTS SHALL NOT BE RESPONSIBLE FOR THE ACCURACY OR COMPLETENESS OF SCANNED COPIES OF THIS PLAN SHEET.

DRAINAGE QUANTITIES

DRAINAGE SYSTEM NUMBER	DRAINAGE UNIT	MINOR CONCRETE (MINOR STRUCTURE)	MISCELLANEOUS IRON AND STEEL	FRAME & GRATE (24-12) (N)	FRAME & GRATE (36R) (N)	MANHOLE FRAME & COVER (N)	36" PRECAST CONCRETE PIPE MANHOLE	REMOVE INLET	REMOVE PIPE	REMOVE CONCRETE (CHANNEL)	REMOVE CONCRETE (Misc)	18" ALTERNATIVE PIPE CULVERT	24" ALTERNATIVE PIPE CULVERT	30" ALTERNATIVE PIPE CULVERT	18" Bit Ctd CSP RISER (0.079" THICK)	18" Bit Ctd CSP (0.079" THICK)	CONCRETE (CHANNEL LINING)	DITCH EXCAVATION	PIPE JOINT CLASSIFICATION	MAXIMUM COVER	"Y" OR "H"	DESCRIPTION	STATION	DRAINAGE UNIT	DRAINAGE SYSTEM NUMBER
		CY	LB	EA	EA	EA	LF	EA	LF	CY	CY	LF	LF	LF	LF	LF	CY	CY		LF	LF				
3	a									0.94												REMOVE 17' Conc V-Ditch	FROM 53.87' Rt 769+63 "B" LINE TO 39.17' Rt 769+74 "B" LINE	a	3
	b																0.77	1.60				14' Conc V-Ditch	FROM 53.87' Rt 769+63 "B" LINE TO 45' Rt 769+72.70 "B" LINE	b	
	c	1.05	236		1		5.50														5.00	GCP INLET/ 6' X 6' Conc APRON	44' Rt 769+73 "B" LINE	c	
	d											6							S	3.52		18" X 6' AP		d	
	e	3.35	435			1															4.72	MH No. 1	39.34' Rt 769+80 "B" LINE	e	
	f											28							S	4.00		18" X 28' AP		f	
	g	1.17	326	1																	4.00	G-1 INLET	37.50' Rt 769+50 "B" LINE	g	
4	a	0.80	236		1		2.50														2.00	GCP INLET/4'X4' Conc APRON	3.34' Rt "RW69" LOL 76+00.17	a	4
	b														10	6			S			18" X 10' Bit Ctd CSP RISER/ 18" X 6' CSP		b	
5	a	0.80	236		1		2.50														2.00	GCP INLET/4'X4' Conc APRON	3.37' Rt "RW69" LOL 78+03.59	a	5
	b														6	6			S			18" X 6' Bit Ctd CSP RISER/ 18" X 6' CSP		b	
6	a	1.17	326	1																	4.00	G-1 INLET	4.80' Lt 770+00 "B" LINE	a	6
	b											126							S	2.50		18" X 126' AP		b	
	c	1.17	326	1																	4.00	G-1 INLET	4.80' Lt 771+25 "B" LINE	c	
	d											100							S	2.74		18" X 100' AP		d	
	e	1.27	326	1																	4.44	G-1 INLET	4.80' Lt 772+25 "B" LINE	e	
	f											76							S	2.94		18" X 76' AP	FROM 772+25 "B" LINE TO 773+00 "B" LINE	f	
	g											12							S	3.34		18" X 12' AP	FROM 773+25 "B" LINE TO 773+40 "B" LINE	g	
	h	1.06	326	1																	3.50	G-1 INLET	4.80' Lt 773+40 "B" LINE	h	
7	a	1.17	326	1																	4.00	G-1 INLET	42.65' Rt 82+00 "A" LINE	a	7
	b											4							S	3.47		18" X 4' AP		b	
	c	4.30	435			1															6.05	MH No. 1	35.72' Rt 82+00 "A" LINE	c	
	d							1														REMOVE INLET	35.72' Rt 82+00 "A" LINE	d	
8	a									1.93												REMOVE 35' Conc V-Ditch	FROM 40.67' Rt 85+50 "A" LINE TO 47.61' Rt 85+77.20 "A" LINE	a	8
	b																1.38	2.90				25' Conc V-Ditch	FROM 43.59' Rt 85+57.07 "A" LINE TO 47.61' Rt 85+77.20 "A" LINE	b	
9	a	0.45									1.20											REMOVE Conc APRON/ REPLACE 7'X 7' Conc APRON	18.50' Lt 87+59 "A" LINE	a	9
SHEET TOTAL		17.76	3,534	6	3	2	10.50	1		2.87	1.20	352			16	12	2.15	4.50							
GRAND TOTAL		33.62	6,869	16	3	3	10.50	7	560	2.87	1.20	352	892	6	16	12	2.15	4.50							

STATE OF CALIFORNIA - DEPARTMENT OF TRANSPORTATION
Caltrans HYDRAULICS

FUNCTIONAL SUPERVISOR: KATHY LOWE
CALCULATED-DESIGNED BY: MY-LINH DUVAN
CHECKED BY: TAN T NGUYEN
REVISED BY
DATE REVISED

DRAINAGE QUANTITIES

DQ-2

LAST REVISION 05-20-15
DATE PLOTTED => 22-SEP-2015
TIME PLOTTED => 10:42

Dist	COUNTY	ROUTE	POST MILES TOTAL PROJECT	SHEET No.	TOTAL SHEETS
12	Ora	73,133	16.6,4.2	26	107

REGISTERED CIVIL ENGINEER — DATE: 05-26-2015

06-01-2015
PLANS APPROVAL DATE

REGISTERED PROFESSIONAL ENGINEER — KEVIN D PHAM No. C61965 Exp. 9-30-15 CIVIL — STATE OF CALIFORNIA

THE STATE OF CALIFORNIA OR ITS OFFICERS OR AGENTS SHALL NOT BE RESPONSIBLE FOR THE ACCURACY OR COMPLETENESS OF SCANNED COPIES OF THIS PLAN SHEET.

NOTES:

1. FOR ACCURATE RIGHT OF WAY DATA, CONTACT RIGHT OF WAY ENGINEERING AT THE DISTRICT OFFICE.
2. LOCATIONS OF UTILITY FACILITIES SHOWN ON THIS PLAN ARE APPROXIMATE AND SHALL BE VERIFIED BY THE CONTRACTOR PRIOR TO CONSTRUCTION.

UTILITY OWNERSHIP:

WATER: LAGUNA BEACH CITY WATER DISTRICT
ELECTRICITY: SOUTHERN CALIFORNIA EDISON
TELEVISION CABLE: COX COMMUNICATIONS

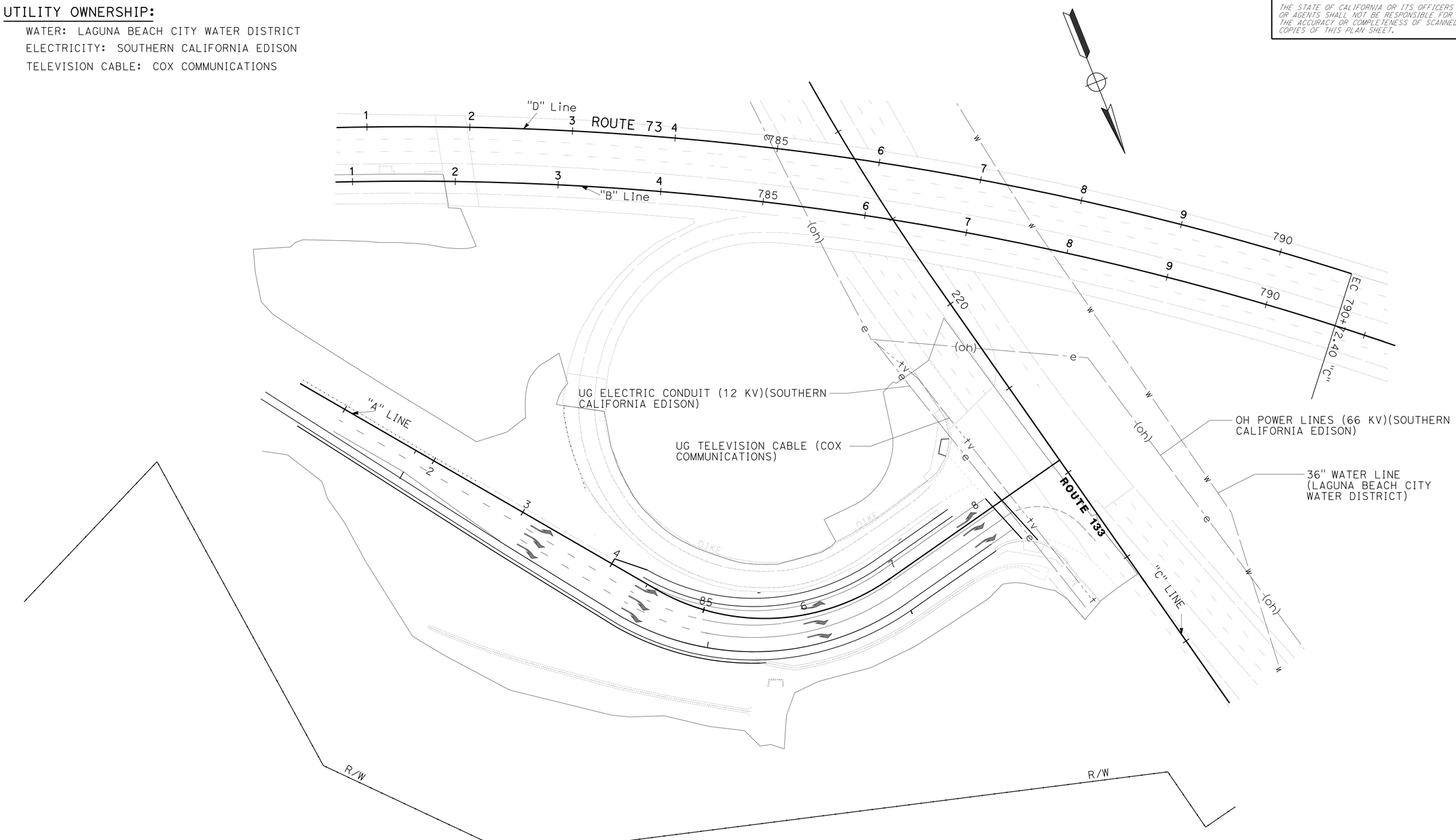

UTILITY PLAN

SCALE: 1"=50'

U-1

THIS PLAN TO BE USED FOR UTILITY INFORMATION ONLY

STATE OF CALIFORNIA - DEPARTMENT OF TRANSPORTATION
Caltrans® UTILITY ENGINEERING

FUNCTIONAL SUPERVISOR: CHRISTOPHER LE
CALCULATED-DESIGNED BY: MINH PHAM
CHECKED BY: KEVIN PHAM
REVISED BY
DATE REVISED

LAST REVISION 05-20-15 | DATE PLOTTED => 22-SEP-2015 | TIME PLOTTED => 10:42

Dist	COUNTY	ROUTE	POST MILES TOTAL PROJECT	SHEET No.	TOTAL SHEETS
12	Ora	73,133	16.6,4.2	27	107

REGISTERED CIVIL ENGINEER 05-26-2015 DATE

06-01-2015
PLANS APPROVAL DATE

REGISTERED PROFESSIONAL ENGINEER FAZLOLLAH ZIAIE No. C59746 Exp.12/31/15 CIVIL STATE OF CALIFORNIA

THE STATE OF CALIFORNIA OR ITS OFFICERS OR AGENTS SHALL NOT BE RESPONSIBLE FOR THE ACCURACY OR COMPLETENESS OF SCANNED COPIES OF THIS PLAN SHEET.

CONSTRUCTION AREA SIGNS

SIGN No.	SIGN CODE	PANEL SIZE (in)	SIGN MESSAGE	No. OF POSTS AND SIZES (in)	No. OF SIGNS
A	W20-1	36 X 36	ROAD WORK AHEAD	1 - 6 X 6 (S)	3
B	G20-2	36 X 18	END ROAD WORK	1 - 4 X 6 (S)	4
				TOTAL	7 *

* FOR ADDITIONAL CONSTRUCTION AREA SIGNS, SEE CS-1 SHEET.

(S) = DENOTES STATIONARY MOUNTED SIGN

NOTE:

EXACT SIGN LOCATIONS TO BE DETERMINED BY THE ENGINEER.

LEGEND:

SIGN WITH ONE POST

(X) SIGN No.

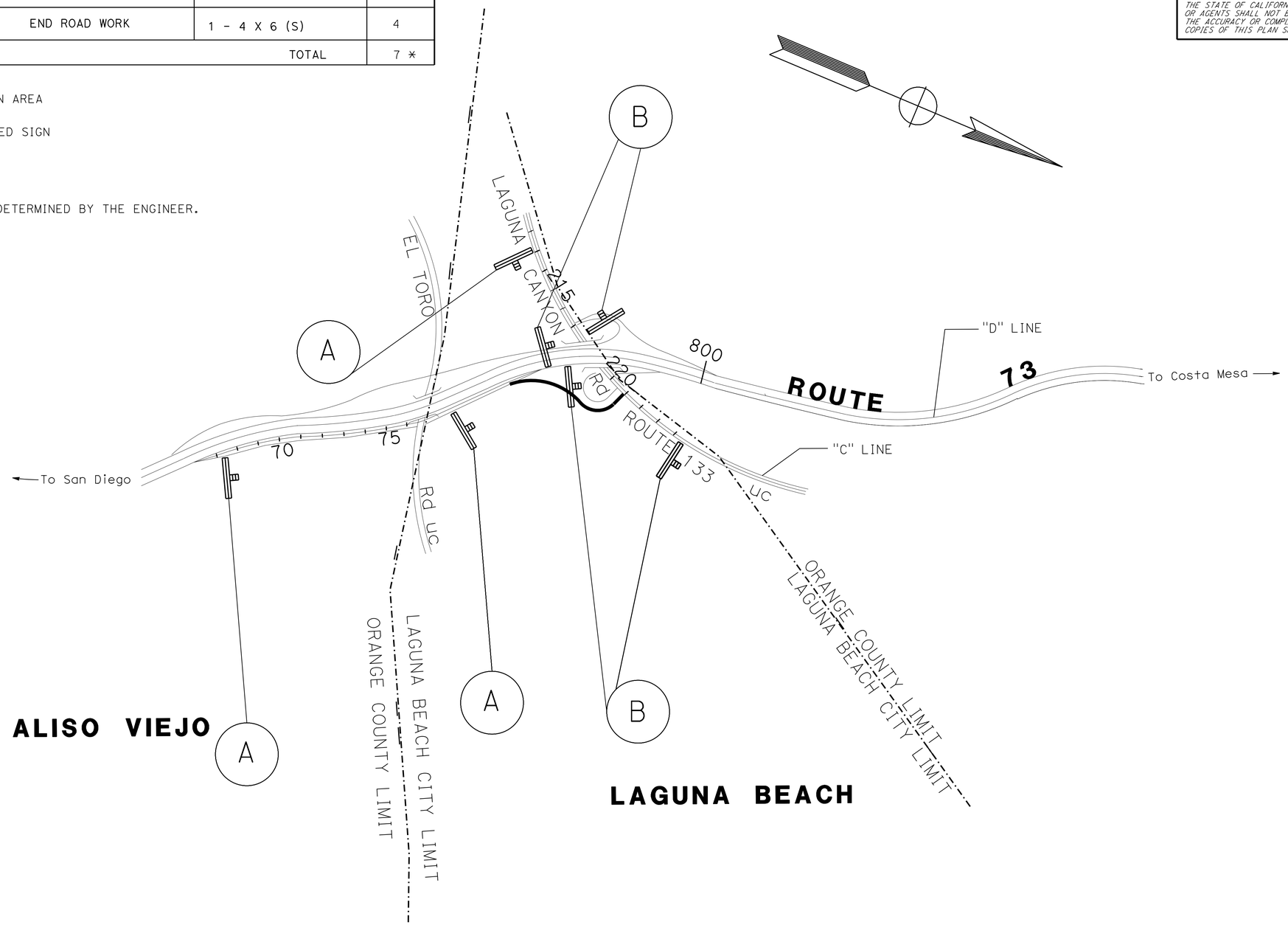

APPROVED FOR CONSTRUCTION AREA SIGN WORK ONLY

CONSTRUCTION AREA SIGN

NO SCALE

CS-1

REVISED BY	DATE REVISED

MINOO ESKANDARI — FAZLOLLAH ZIAIE

CALCULATED-DESIGNED BY — CHECKED BY

FUNCTIONAL SUPERVISOR: MATTHEW CUGINI

STATE OF CALIFORNIA - DEPARTMENT OF TRANSPORTATION — DESIGN C

LAST REVISION 5-20-15 — DATE PLOTTED => 22-SEP-2015 TIME PLOTTED => 10:42

Dist	COUNTY	ROUTE	POST MILES TOTAL PROJECT	SHEET No.	TOTAL SHEETS
12	Ora	73,133	16.6,4.2	28	107

05-26-2015
REGISTERED CIVIL ENGINEER DATE

06-01-2015
PLANS APPROVAL DATE

REGISTERED PROFESSIONAL ENGINEER FAZLOLLAH ZIAIE No. C59746 Exp.12/31/15 CIVIL STATE OF CALIFORNIA

THE STATE OF CALIFORNIA OR ITS OFFICERS OR AGENTS SHALL NOT BE RESPONSIBLE FOR THE ACCURACY OR COMPLETENESS OF SCANNED COPIES OF THIS PLAN SHEET.

NOTES:

1. FOR ACCURATE RIGHT OF WAY DATA, CONTACT RIGHT OF WAY ENGINEERING AT THE DISTRICT OFFICE.

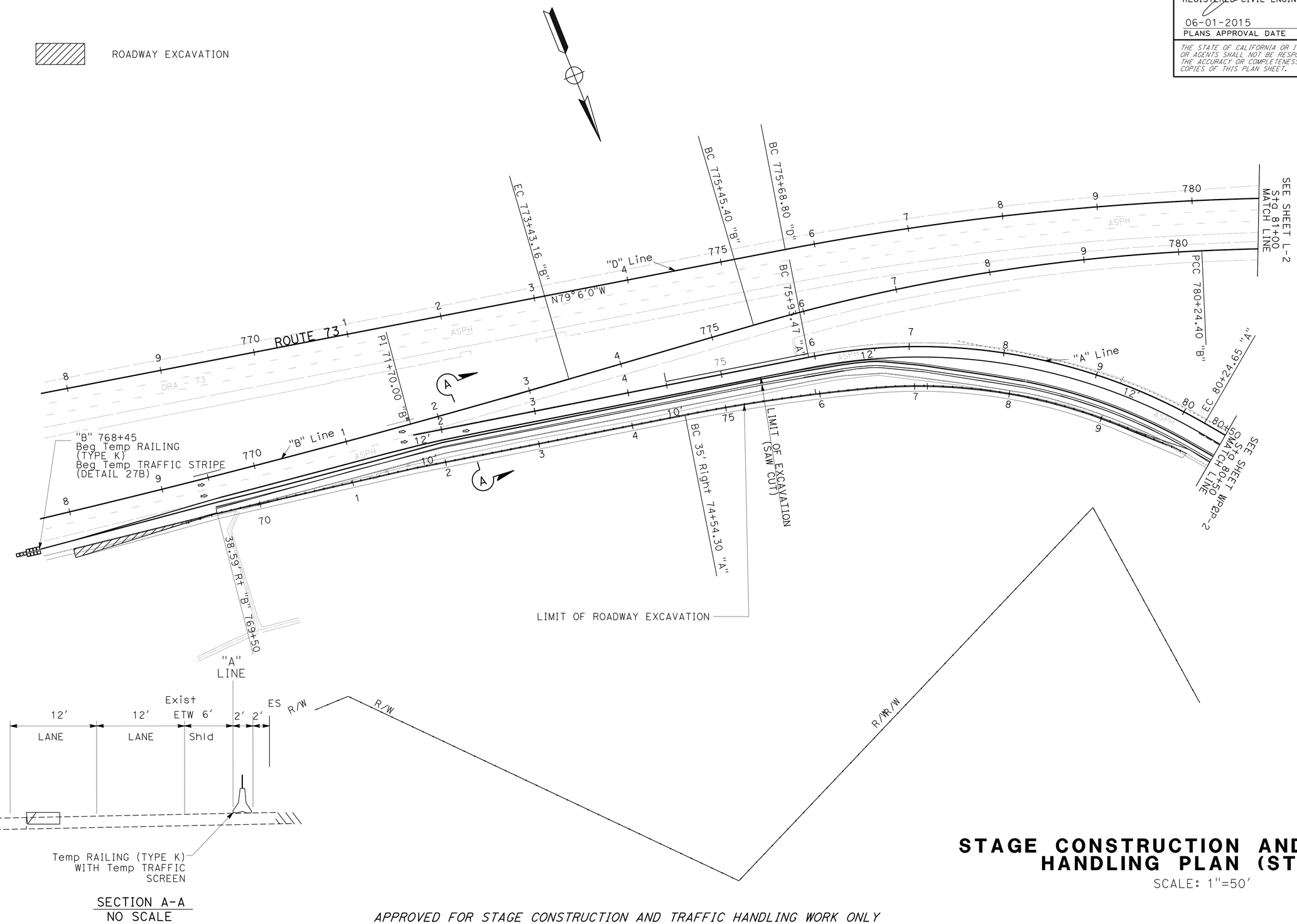

STAGE CONSTRUCTION AND TRAFFIC HANDLING PLAN (STAGE 1)

SCALE: 1"=50'

APPROVED FOR STAGE CONSTRUCTION AND TRAFFIC HANDLING WORK ONLY

SC-1

STATE OF CALIFORNIA - DEPARTMENT OF TRANSPORTATION

Caltrans

FUNCTIONAL SUPERVISOR: MATTHEW CUGINI

CALCULATED-DESIGNED BY: FAZLOLLAH ZIAIE

CHECKED BY: FAZLOLLAH ZIAIE

REVISED BY

DATE REVISED

DESIGN NCC

LAST REVISION 5-29-15

DATE PLOTTED => 22-SEP-2015
TIME PLOTTED => 10:42

Dist	COUNTY	ROUTE	POST MILES TOTAL PROJECT	SHEET No.	TOTAL SHEETS
12	Ora	73,133	16.6,4.2	29	107

REGISTERED CIVIL ENGINEER 05-26-2015 DATE

06-01-2015
PLANS APPROVAL DATE

REGISTERED PROFESSIONAL ENGINEER FAZLOLLAH ZIAIE No. C59746 Exp.12/31/15 CIVIL STATE OF CALIFORNIA

THE STATE OF CALIFORNIA OR ITS OFFICERS OR AGENTS SHALL NOT BE RESPONSIBLE FOR THE ACCURACY OR COMPLETENESS OF SCANNED COPIES OF THIS PLAN SHEET.

NOTE:

1. FOR ACCURATE RIGHT OF WAY DATA, CONTACT RIGHT OF WAY ENGINEERING AT THE DISTRICT OFFICE.

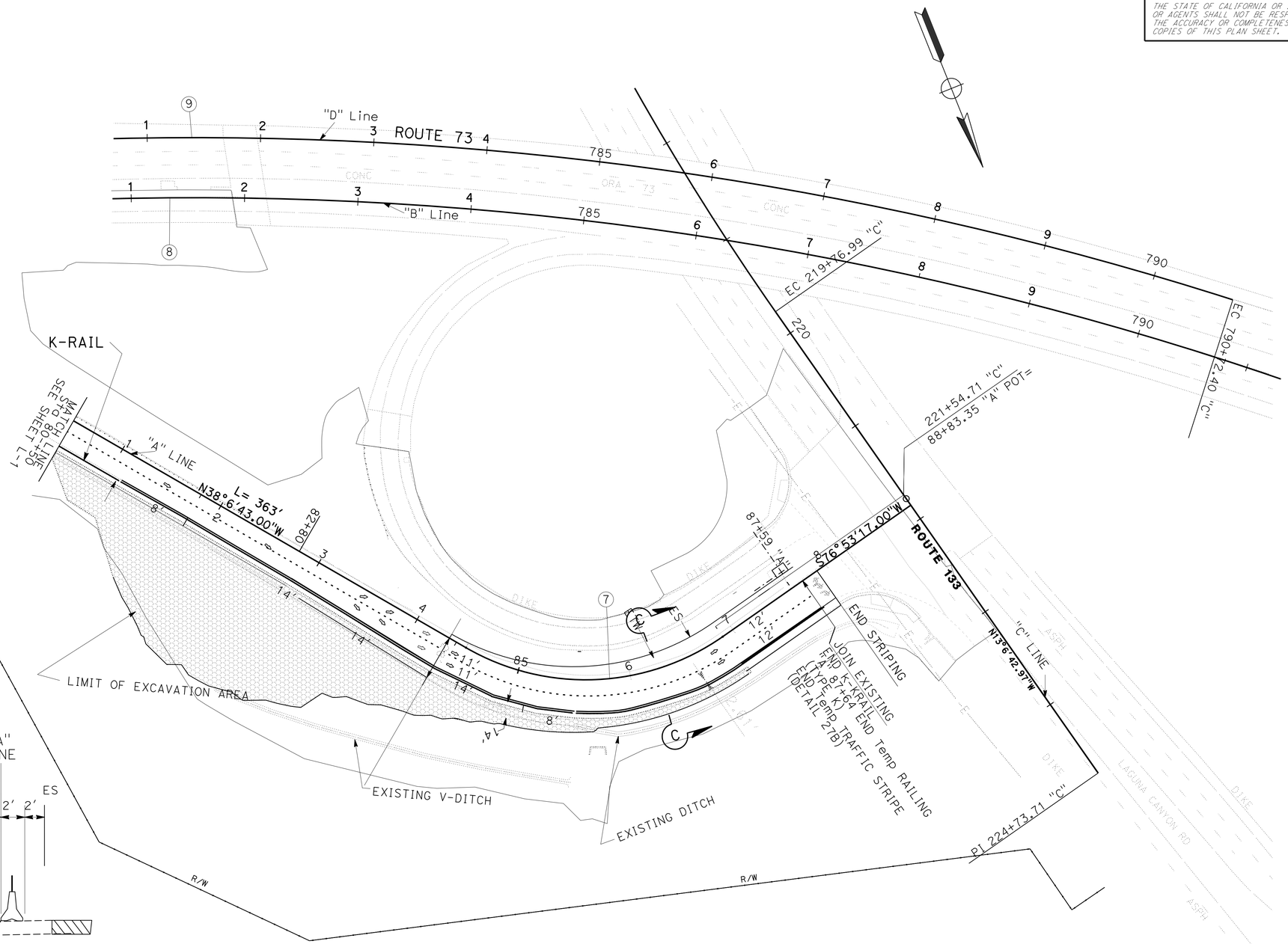

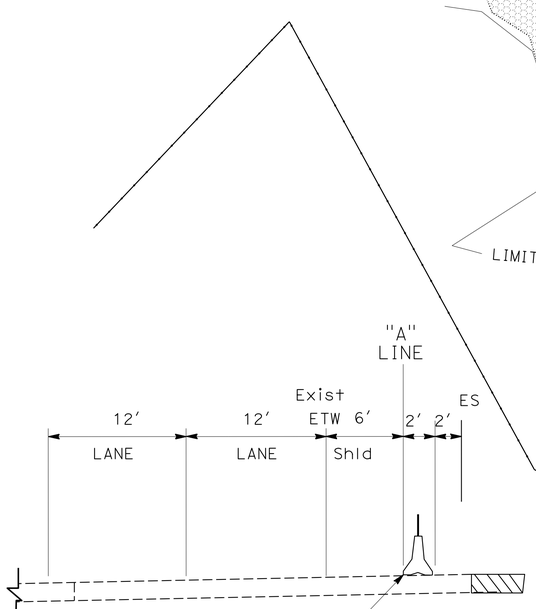

SECTION C-C
NO SCALE

STAGE CONSTRUCTION AND TRAFFIC HANDLING PLAN (STAGE 1)

SCALE: 1"=50'

SC-2

REVISED BY	DATE REVISED
FAZLOLLAH ZIAIE	FAZLOLLAH ZIAIE

CALCULATED-DESIGNED BY FAZLOLLAH ZIAIE
CHECKED BY

FUNCTIONAL SUPERVISOR MATTHEW CUGINI

STATE OF CALIFORNIA - DEPARTMENT OF TRANSPORTATION
Caltrans
DESIGN C

LAST REVISION 5-28-15
DATE PLOTTED => 22-SEP-2015
TIME PLOTTED => 10:42

Dist	COUNTY	ROUTE	POST MILES TOTAL PROJECT	SHEET No.	TOTAL SHEETS
12	Ora	73,133	16.6,4.2	30	107

REGISTERED CIVIL ENGINEER 05-26-2015 DATE

06-01-2015
PLANS APPROVAL DATE

REGISTERED PROFESSIONAL ENGINEER FAZLOLLAH ZIAIE No. C59746 Exp.12/31/15 CIVIL STATE OF CALIFORNIA

THE STATE OF CALIFORNIA OR ITS OFFICERS OR AGENTS SHALL NOT BE RESPONSIBLE FOR THE ACCURACY OR COMPLETENESS OF SCANNED COPIES OF THIS PLAN SHEET.

NOTES:

1. FOR ACCURATE RIGHT OF WAY DATA, CONTACT RIGHT OF WAY ENGINEERING AT THE DISTRICT OFFICE.

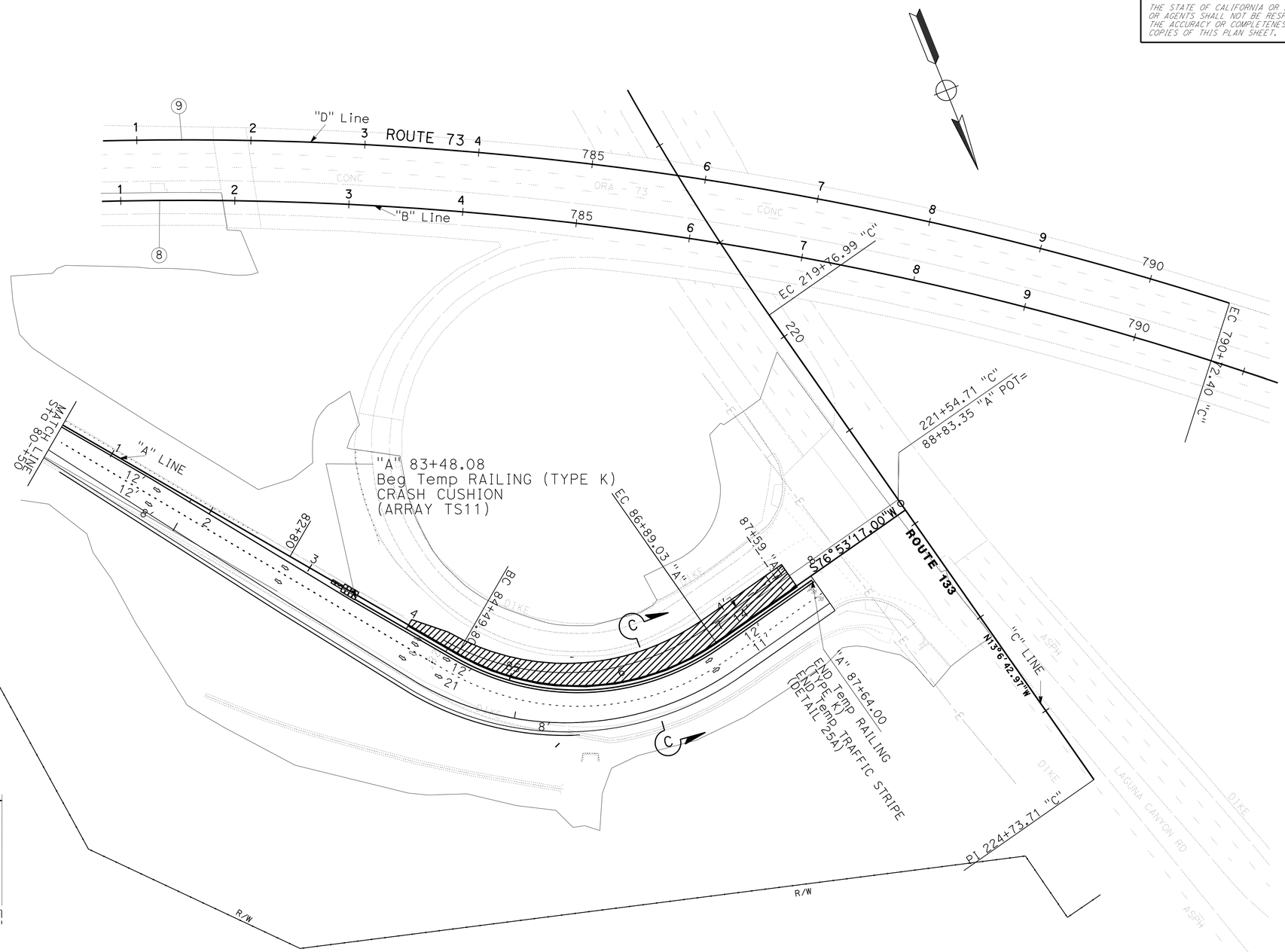

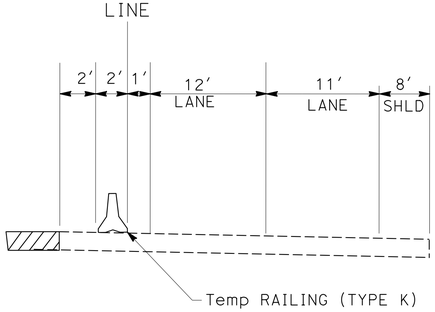

SECTION C-C
NO SCALE

STAGE CONSTRUCTION AND TRAFFIC HANDLING PLAN (STAGE 2)

SCALE: 1"=50'

SC-3

APPROVED FOR STAGE CONSTRUCTION AND TRAFFIC HANDLING WORK ONLY

STATE OF CALIFORNIA - DEPARTMENT OF TRANSPORTATION
Caltrans®

DESIGN C
FUNCTIONAL SUPERVISOR: MATTHEW CUGINI
CALCULATED-DESIGNED BY: FAZLOLLAH ZIAIE
CHECKED BY: FAZLOLLAH ZIAIE
REVISED BY
DATE REVISED

LAST REVISION 5-29-15
DATE PLOTTED => 22-SEP-2015
TIME PLOTTED => 10:42

Dist	COUNTY	ROUTE	POST MILES TOTAL PROJECT	SHEET No.	TOTAL SHEETS
12	Ora	73,133	16.6,4.2	31	107

REGISTERED CIVIL ENGINEER 05-26-2015 DATE

06-01-2015
PLANS APPROVAL DATE

REGISTERED PROFESSIONAL ENGINEER FAZLOLLAH ZIAIE No. C59746 Exp.12/31/15 CIVIL STATE OF CALIFORNIA

THE STATE OF CALIFORNIA OR ITS OFFICERS OR AGENTS SHALL NOT BE RESPONSIBLE FOR THE ACCURACY OR COMPLETENESS OF SCANNED COPIES OF THIS PLAN SHEET.

NOTES:

1. FOR ACCURATE RIGHT OF WAY DATA, CONTACT RIGHT OF WAY ENGINEERING AT THE DISTRICT OFFICE.

STAGE CONSTRUCTION QUANTITIES

SHEET NUMBER	STATION	SIGN NOS. DESCRIPTION		TEMPORARY K-RAIL	TEMPORARY CRASH CUSHIONS TU 14	2 - COAT PAINT STRIPE			PAVEMENT MARKERS TYPE H	MARKERS TYPE P (CA) LT.
		W 21- 5 b RIGFHT SHOULDER CLOSED AHEAD	C 30 A (CA) SHOULDER CLOSED			DETAIL 27 B 4" WHITE	DETAIL 25 A 4" YELLOW	PAINTED ARROWS TYPE I		
		EA	EA	LF	EA	LF	LF	SQ FT	EA	EA
		1	1							1
SC-1	STA. 780+40 - 780+24.40 "B' LINE			1880						
	STA. 798+40 "B" LINE				1					
	STA. 778+40-780+24.0 'B" LIINE					1880				
	STA. 771+75-780+50 "B" LINE						875		38	
								56		
SC-2	STA. 774 + 50 - 787 + 40 "B" LINE			1290						
	STA. 774 + 50 - 787 + 40 "B" LINE					1290				
	STA. 774 + 50 - 787 + 40 "B" LINE						1290			
									28	
								140		
	TOTAL	1	1	3170	1	3170	2165	196	66	1

APPROVED FOR QUANTITIES ONLY

STAGE CONSTRUCTION AND TRAFFIC HANDLING QUANNTITIES

SCQ-1

STATE OF CALIFORNIA - DEPARTMENT OF TRANSPORTATION

Caltrans

FUNCTIONAL SUPERVISOR: MATTHEW CUGINI

CALCULATED-DESIGNED BY: FAZLOLLAH ZIAIE

CHECKED BY

REVISED BY

DATE REVISED

LAST REVISION 5-26-15

DATE PLOTTED => 22-SEP-2015
TIME PLOTTED => 10:42

Dist	COUNTY	ROUTE	POST MILES TOTAL PROJECT	SHEET No.	TOTAL SHEETS
12	Ora	73,133	16.6,4.2	32	107

REGISTERED CIVIL ENGINEER 05-26-2015 DATE

06-01-2015
PLANS APPROVAL DATE

REGISTERED PROFESSIONAL ENGINEER FAZLOLLAH ZIAIE No. C59746 Exp.12/31/15 CIVIL STATE OF CALIFORNIA

THE STATE OF CALIFORNIA OR ITS OFFICERS OR AGENTS SHALL NOT BE RESPONSIBLE FOR THE ACCURACY OR COMPLETENESS OF SCANNED COPIES OF THIS PLAN SHEET.

CONSTRUCTION AREA SIGNS

SIGN No.	SIGN CODE	PANEL SIZE (in)	No. OF SIGNS	REMARKS
1	SC-3(CA) G28-2(CA)	30 x 15 18 x 21	5	(S)
2	M4-10(LT) G28-2(CA)	30 X 15 18 X 21	1	(S)
TOTAL			6 *	
TYPE III BARRICADE			2	

* FOR ADDITIONAL CONSTRUCTION AREA SIGNS, SEE CS-1 SHEET.

(S) = DENOTES STATIONARY MOUNTED SIGN

SHEET	BERRICADE TYPE III
	EA
TH-1	2
TOTAL	2

PORTABLE CHANGEABLE MESSAGE SIGN

SIGN No.	SIGN CODE	SIGN MESSAGE	No. OF SIGNS
(A)	PCMS	SEE NOTE 1	1

NOTES:

1. DURING THE NB ROUTE 73 COLLECTOR TO ROUTE 133 EXIT RAMP CLOSURE, THE PCMS MESSAGE SHOULD READ AS FOLLOWS:

NB 73 TO 133 CLOSED	→	USE EL TORO RD
1ST FRAME		2ND FRAME

2. LOCATION OF CONSTRUCTION AREA SIGNS SHOWN ARE APPROXIMATE. EXACT SIGN LOCATIONS TO BE DETERMINED BY THE ENGINEER.

LEGEND:

SIGN WITH ONE POST

(X) SIGN No.

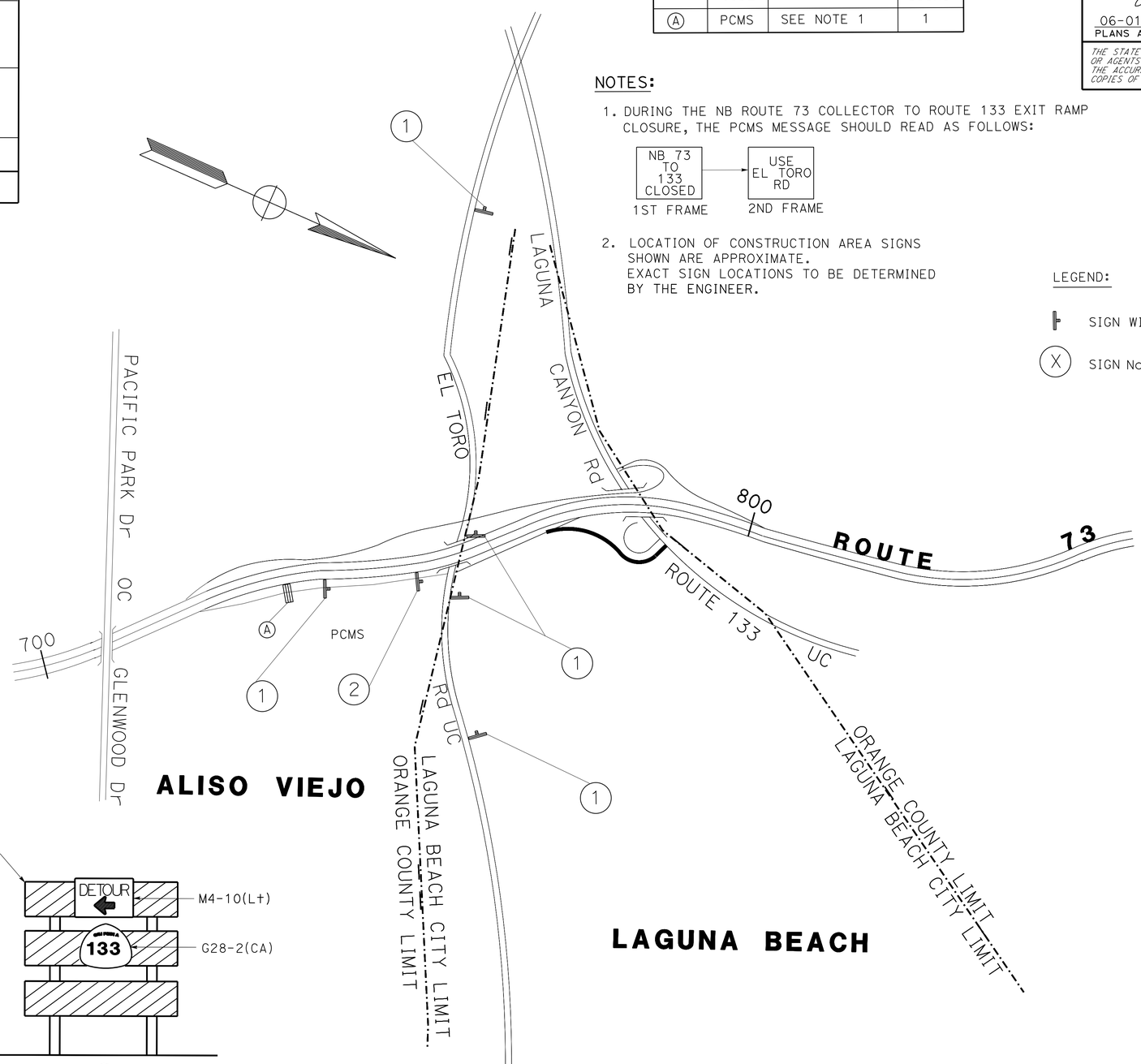

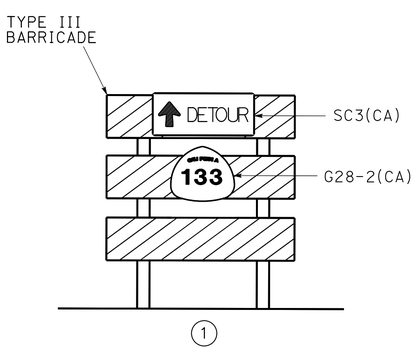

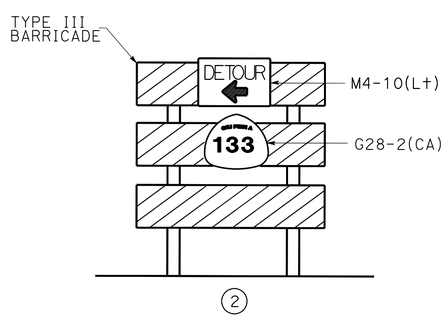

TRAFFIC HANDLING PLAN

NO SCALE

TH-1

APPROVED FOR TRAFFIC HANDLING WORK ONLY.

STATE OF CALIFORNIA - DEPARTMENT OF TRANSPORTATION
Caltrans
DESIGN C
FUNCTIONAL SUPERVISOR: MATTHEW CUGINI
CALCULATED-DESIGNED BY: MINOO ESKANDARI
CHECKED BY: FAZLOLLAH ZIAIE
REVISED BY
DATE REVISED

LAST REVISION 5-20-15
DATE PLOTTED => 22-SEP-2015
TIME PLOTTED => 10:42

Dist	COUNTY	ROUTE	POST MILES TOTAL PROJECT	SHEET No.	TOTAL SHEETS
12	Ora	73,133	16.6,4.2	33	107

REGISTERED CIVIL ENGINEER 05-26-2015 DATE

06-01-2015
PLANS APPROVAL DATE

REGISTERED PROFESSIONAL ENGINEER SURAWEERA BERNADETTE No. C77207 Exp. 06-30-15 CIVIL STATE OF CALIFORNIA

THE STATE OF CALIFORNIA OR ITS OFFICERS OR AGENTS SHALL NOT BE RESPONSIBLE FOR THE ACCURACY OR COMPLETENESS OF SCANNED COPIES OF THIS PLAN SHEET.

NOTES:

1. FOR ACCURATE RIGHT OF WAY DATA, CONTACT RIGHT OF WAY ENGINEERING AT THE DISTRICT OFFICE
2. REMOVE ALL CONFLICTING TRAFFIC STRIPES, PAVEMENT MARKINGS AND PAVEMENT MARKERS
3. TRAFFIC STRIPE AND PAVEMENT MARKINGS SHALL BE THERMOPLASTIC ENHANCED WET NIGHT VISIBILITY, UNLESS OTHERWISE NOTED
4. EXACT LOCATIONS FOR PAVEMNET MARKINGS TO BE DETERMINED BY THE ENGINEER
5. DIMENSIONS ALONG CURB AND GUTTER ARE GIVEN TO FACE OF CURB
6. SEE STANDARD PLAN FOR PAVEMENT MARKING SYMBOLS AND WORDS DETAILS

LEGEND:

- (XX) PAVEMENT DELINEATION DETAIL
- (XX/XX) COMBO PAVEMENT DELINEATION DETAIL
- CHANGE OF PAVEMENT DELINEATION DETAIL
- END OF PAVEMENT DELINEATION DETAIL
- X DELINEATOR (CLASS-1) TYPE (X= F or G)
- (CW) 12" SOLID WHITE CROSS WALK
- (DL) 12" SOLID WHITE @ 45 DEGREE ANGLE TO THE STRIPING DETAIL 27B
- DIRECTION OF TRAFFIC

ABBREVIATIONS:

S SIGNAL
A AHEAD
S=XX' SPACING BETWEEN DELINEATORS
T THERMOPLASTIC

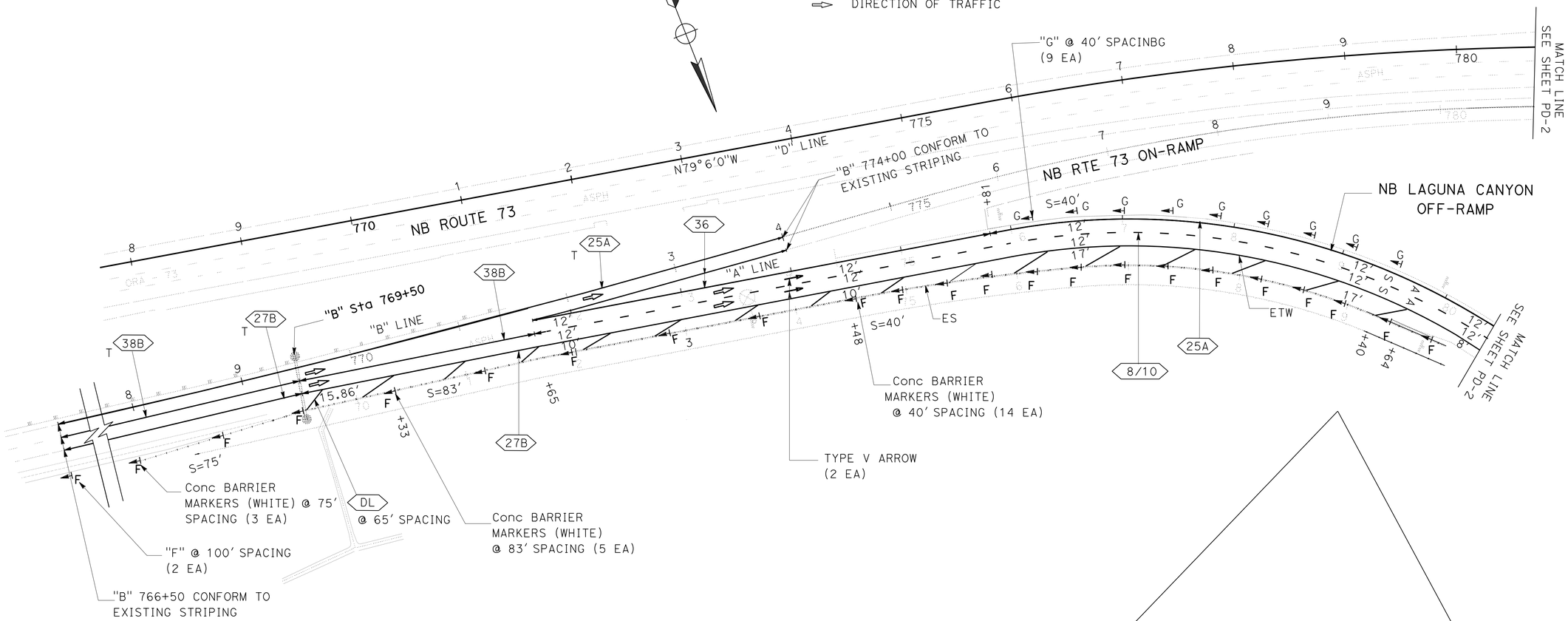

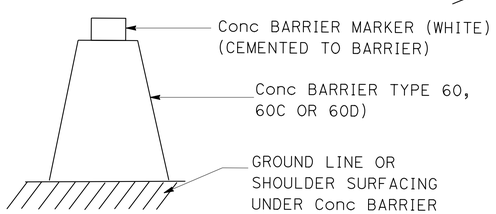

CONCRETE BARRIER DELINEATION

APPROVED FOR PAVEMENT DELINEATION WORK ONLY

PAVEMENT DELINEATION PLAN

SCALE: 1" = 50'

PD-1

STATE OF CALIFORNIA - DEPARTMENT OF TRANSPORTATION
Caltrans
DESIGN BRANCH F

FUNCTIONAL SUPERVISOR: KAMRAN MAZHAR
CALCULATED-DESIGNED BY: BERNADETTE SURAWEERA
CHECKED BY: BERNADETTE SURAWEERA
REVISED BY
DATE REVISED

LAST REVISION 04-15-15
DATE PLOTTED => 22-SEP-2015
TIME PLOTTED => 10:42

Dist	COUNTY	ROUTE	POST MILES TOTAL PROJECT	SHEET No.	TOTAL SHEETS
12	Ora	73,133	16.6,4.2	34	107

REGISTERED CIVIL ENGINEER 05-26-2015 DATE

06-01-2015
PLANS APPROVAL DATE

REGISTERED PROFESSIONAL ENGINEER BERNADETTE SURAWEERA No. C77207 Exp.06-30-15 CIVIL STATE OF CALIFORNIA

THE STATE OF CALIFORNIA OR ITS OFFICERS OR AGENTS SHALL NOT BE RESPONSIBLE FOR THE ACCURACY OR COMPLETENESS OF SCANNED COPIES OF THIS PLAN SHEET.

NOTES:

1. FOR ACCURATE RIGHT OF WAY DATA, CONTACT RIGHT OF WAY ENGINEERING AT THE DISTRICT OFFICE.

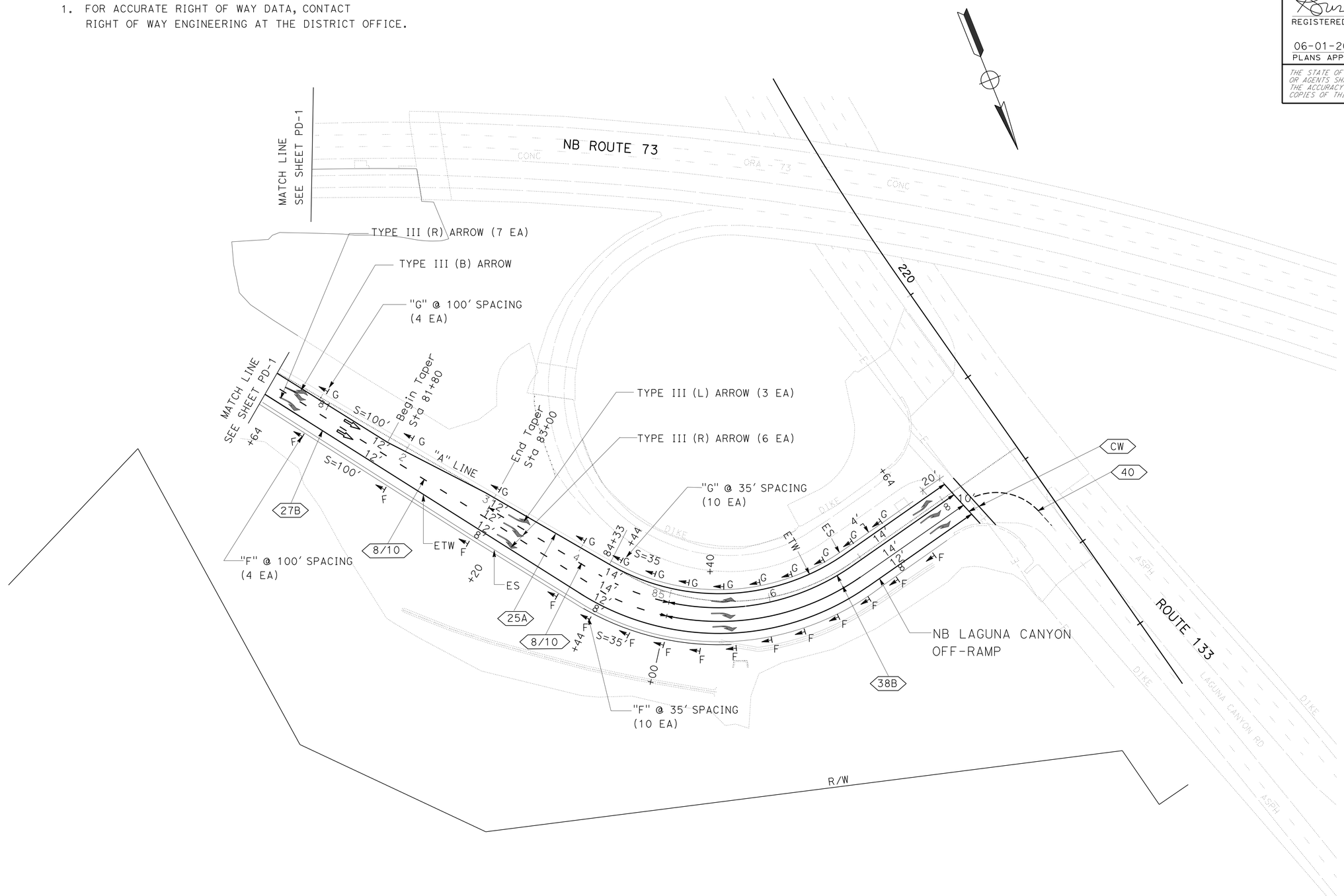

PAVEMENT DELINEATION PLAN

SCALE: 1" = 50'

PD-2

APPROVED FOR PAVEMENT DELINEATION WORK ONLY

STATE OF CALIFORNIA - DEPARTMENT OF TRANSPORTATION
Caltrans
DESIGN BRANCH F
FUNCTIONAL SUPERVISOR: KAMRAN MAZHAR
CALCULATED-DESIGNED BY: BERNADETTE SURAWEERA
CHECKED BY: BERNADETTE SURAWEERA
REVISED BY
DATE REVISED

LAST REVISION 05-27-15 | DATE PLOTTED => 22-SEP-2015 | TIME PLOTTED => 10:42

Dist	COUNTY	ROUTE	POST MILES TOTAL PROJECT	SHEET No.	TOTAL SHEETS
12	Ora	73,133	16.6,4.2	35	107

REGISTERED CIVIL ENGINEER 05-26-2015 DATE

06-01-2015
PLANS APPROVAL DATE

REGISTERED PROFESSIONAL ENGINEER BERNADETTE SURAWEERA No. C77207 Exp.06-30-15 CIVIL STATE OF CALIFORNIA

THE STATE OF CALIFORNIA OR ITS OFFICERS OR AGENTS SHALL NOT BE RESPONSIBLE FOR THE ACCURACY OR COMPLETENESS OF SCANNED COPIES OF THIS PLAN SHEET.

PAVEMENT DELINEATION QUANTITIES

SHEET No.	STATIONS	THERMOPLASTIC TRAFFIC STRIPE									THERMOPLASTIC PAVEMENT MARKING (ENHANCED WET NIGHT VISIBILITY)		PAVEMENT MARKER (RETROREFLECTIVE)		PAVEMENT MARKER (NON REFLECTIVE)	DELINEATOR (CLASS 1)		Conc BARRIER MARKER (WHITE) (N)	REMOVE				
		4"		8"	ENHANCED WET NIGHT VISIBIILITY 4"				ENHANCED WET NIGHT VISIBIILITY 8"														
		SOLID YELLOW DETAIL 25A	SOLID WHITE DETAIL 27B	SOLID WHITE DETAIL 38B	SOLID YELLOW DETAIL 25A	SOLID WHITE DETAIL 27B	BROKEN WHITE (17-7) DETAIL 8/10	BROKEN WHITE (6-1) DETAIL 40	SOLID WHITE DETAIL 38B	SOLID WHITE DETAIL 36	ARROW WHITE	CROSS WALK & DIAGONAL	TYPE H	TYPE G	TYPE A	TYPE F	TYPE G		YELLOW THERMOPLASTIC TRAFFIC STRIPE (HAZARDOUS WASTE)	THERMOPLASTIC TRAFFIC STRIPE	THERMOPLASTIC PAVEMENT MARKING	PAVEMENT MARKER	DELINEATOR
		LF	LF	LF	LF	LF	LF	LF	LF	LF	SQFT	SQFT	EA	EA	EA	EA	EA	EA	LF	LF	SQFT	EA	EA
PD-1	"B" 766+50 TO 774+00	750	300	300		215			215	225		420	33	93	30	2		5	750	1,669		112	4
	"A" 771+65 TO 780+50				469	885	885			416	66		23	27	42		9	17	519	1,585	62	46	15
PD-2	"A" 780+50 TO 788+20				760	760	650	28	620		493	245	31	72	96	14	14		710	1,130	170	157	5
SUBTOTAL		750	300	300	1229	1860	1535	28	835	641	559	665	87	192	168	16	23	22	1,979	4,384	232	315	24
TOTAL		1050		300	3089		1535	28	1476		1224		279		168	39		22	1,979	4,384	232	315	24

NOTE:

THE EXSITING REMOVAL STRIPING AND PAVEMENT MARKINGS ARE THERMOPLASTIC

LEGEND:

(N) NOT A SEPARATE PAY ITEM, FOR INFORMATION ONLY

PAVEMENT DELINEATION QUANTITIES

PDQ-1

STATE OF CALIFORNIA - DEPARTMENT OF TRANSPORTATION
Caltrans DESIGN BRANCH F

FUNCTIONAL SUPERVISOR: KAMRAN MAZHAR
CALCULATED-DESIGNED BY: BERNADETTE SURAWEERA
CHECKED BY: BERNADETTE SURAWEERA
REVISED BY
DATE REVISED

LAST REVISION 05-20-15
DATE PLOTTED => 22-SEP-2015
TIME PLOTTED => 10:42

Dist	COUNTY	ROUTE	POST MILES TOTAL PROJECT	SHEET No.	TOTAL SHEETS
12	Ora	73,133	16.6,4.2	36	107

REGISTERED CIVIL ENGINEER 05-26-2015 DATE

06-01-2015
PLANS APPROVAL DATE

REGISTERED PROFESSIONAL ENGINEER BERNADETTE SURAWEERA No. C77207 Exp. 06-30-15 CIVIL STATE OF CALIFORNIA

THE STATE OF CALIFORNIA OR ITS OFFICERS OR AGENTS SHALL NOT BE RESPONSIBLE FOR THE ACCURACY OR COMPLETENESS OF SCANNED COPIES OF THIS PLAN SHEET.

NOTES:

1. FOR ACCURATE RIGHT OF WAY DATA, CONTACT RIGHT OF WAY ENGINEERING AT THE DISTRICT OFFICE.
2. SEE STANDARD PLAN FOR ROADSIDE SIGN AND OVERHEAD SIGN INSTALLATION

ABBREVIATIONS:

IS1	ROADSIDE SIGN-ONE POST
IS2	ROADSIDE SIGN-TWO POST
ISB	INSTALL ROADSIDE SIGN (STRAP AND SADDLE BRACKET METHOD)
ISS	INSTALL SIGN STRUCTURE
SMA	MAST ARM MOUNTED SIGN (SEE ELECTRICAL)
RS	REMOVE ROADSIDE SIGN
RSB	REMOVE ROADSIDE SIGN (STRAP AND SADDLE BRACKET METHOD)
RSS	REMOVE SIGN STRUCTURE
RSMA	REMOVE MAST ARM MOUNTED SIGN (SEE ELECTRICAL)

LEGEND:

SX-XX	ROADSIDE SIGN NUMBER
OSX-XXX	OVERHEAD SIGN NUMBER
	EXIST OVERHEAD SIGN STRUCTURE TWO POSTS
	ROADSIDE SIGN (ONE POST)
	ROADSIDE SIGN (TWO POST)
	ROADSIDE SIGN (STRAP AND SADDLE BRACKET METHOD)
	OVERHEAD SIGN STRUCTURE TWO POSTS
	DIRECTION OF TRAFFIC

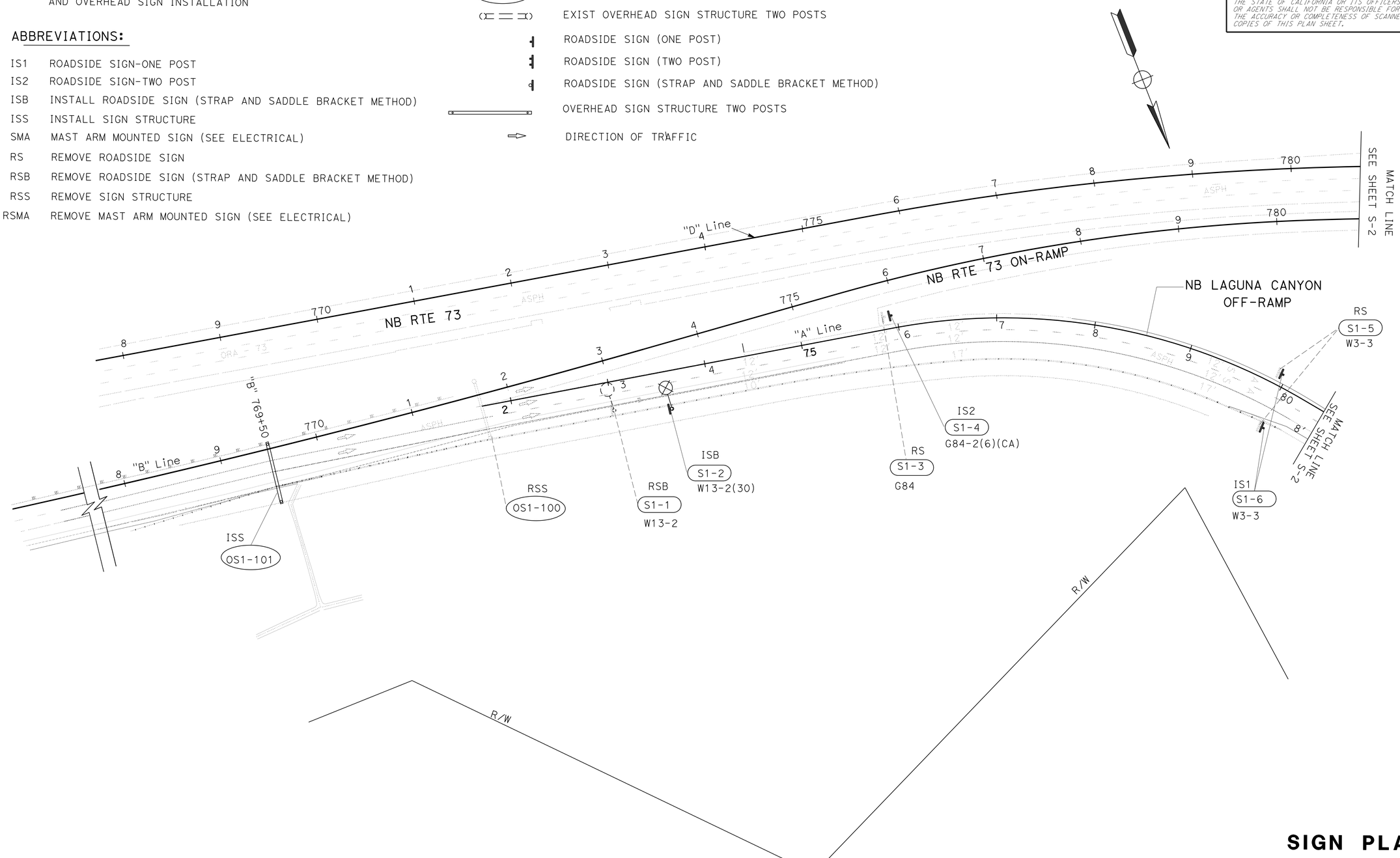

APPROVED FOR SIGN WORK ONLY

SIGN PLAN

SCALE: 1" = 50'

S-1

REVISED BY	BERNADETTE SURAWEERA
DATE REVISED	BERNADETTE SURAWEERA
CALCULATED-DESIGNED BY	
CHECKED BY	
FUNCTIONAL SUPERVISOR	KAMRAN MAZHAR

STATE OF CALIFORNIA - DEPARTMENT OF TRANSPORTATION
Caltrans DESIGN BRANCH F

LAST REVISION 05-21-15 | DATE PLOTTED => 22-SEP-2015 | TIME PLOTTED => 10:42

Dist	COUNTY	ROUTE	POST MILES TOTAL PROJECT	SHEET No.	TOTAL SHEETS
12	Ora	73,133	16.6,4.2	37	107

REGISTERED CIVIL ENGINEER 05-26-2015 DATE

06-01-2015
PLANS APPROVAL DATE

REGISTERED PROFESSIONAL ENGINEER BERNADETTE SURAWEERA No. C77207 Exp.06-30-15 CIVIL STATE OF CALIFORNIA

THE STATE OF CALIFORNIA OR ITS OFFICERS OR AGENTS SHALL NOT BE RESPONSIBLE FOR THE ACCURACY OR COMPLETENESS OF SCANNED COPIES OF THIS PLAN SHEET.

NOTES:

1. FOR ACCURATE RIGHT OF WAY DATA, CONTACT RIGHT OF WAY ENGINEERING AT THE DISTRICT OFFICE.

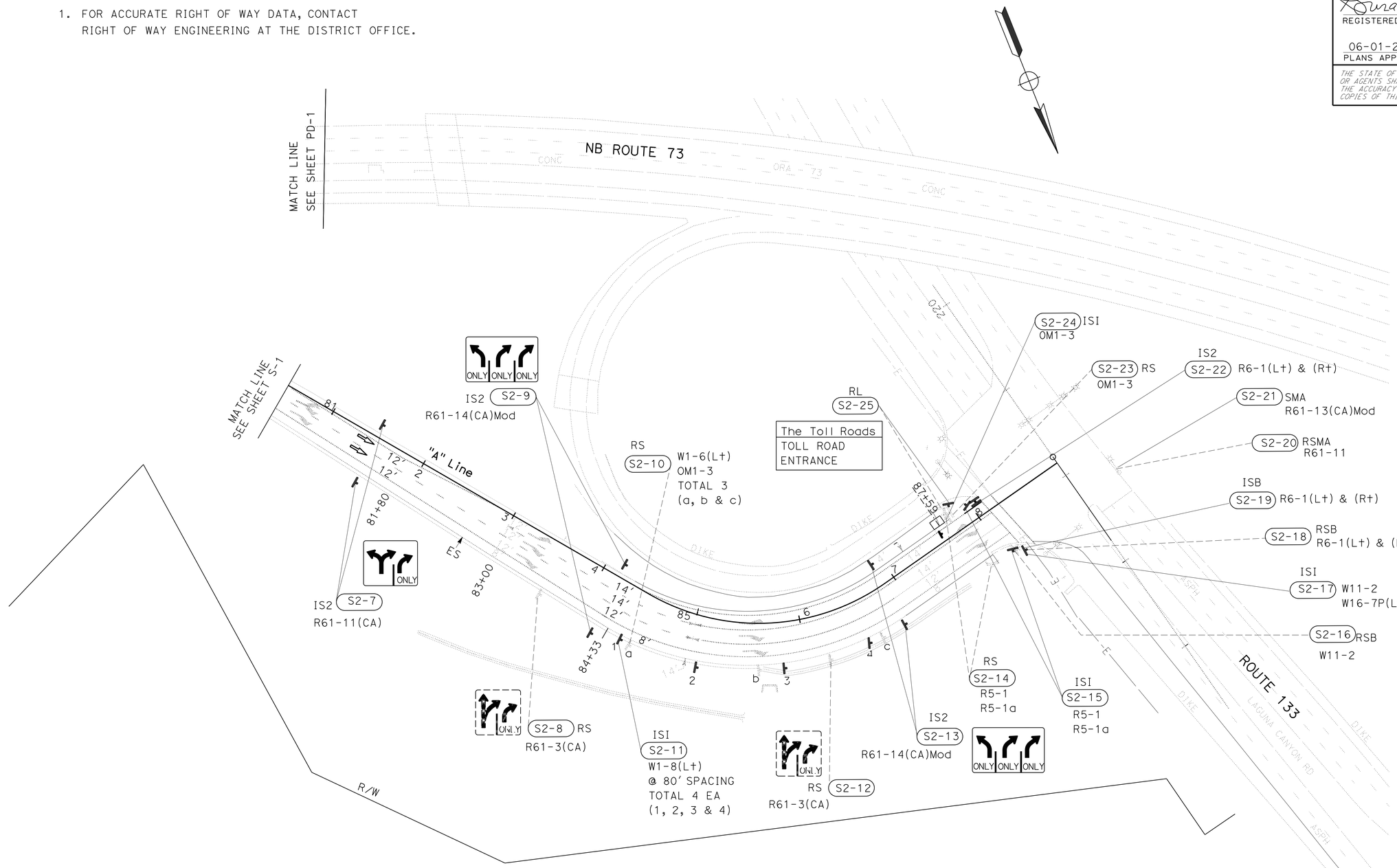

SIGN PLAN

SCALE: 1" = 50'

S-2

APPROVED FOR SIGN WORK ONLY

STATE OF CALIFORNIA - DEPARTMENT OF TRANSPORTATION
Caltrans
DESIGN BRANCH F

FUNCTIONAL SUPERVISOR: KAMRAN MAZHAR
CALCULATED-DESIGNED BY: BERNADETTE SURAWEERA
CHECKED BY: BERNADETTE SURAWEERA
REVISED BY
DATE REVISED

LAST REVISION 05-27-15
DATE PLOTTED => 22-SEP-2015
TIME PLOTTED => 10:42

Dist	COUNTY	ROUTE	POST MILES TOTAL PROJECT	SHEET No.	TOTAL SHEETS
12	Ora	73,133	16.6,4.2	38	107

REGISTERED CIVIL ENGINEER 05-26-2015 DATE

06-01-2015
PLANS APPROVAL DATE

REGISTERED PROFESSIONAL ENGINEER
BERNADETTE SURAWEERA
No. C77207
Exp. 06-30-15
CIVIL
STATE OF CALIFORNIA

THE STATE OF CALIFORNIA OR ITS OFFICERS OR AGENTS SHALL NOT BE RESPONSIBLE FOR THE ACCURACY OR COMPLETENESS OF SCANNED COPIES OF THIS PLAN SHEET.

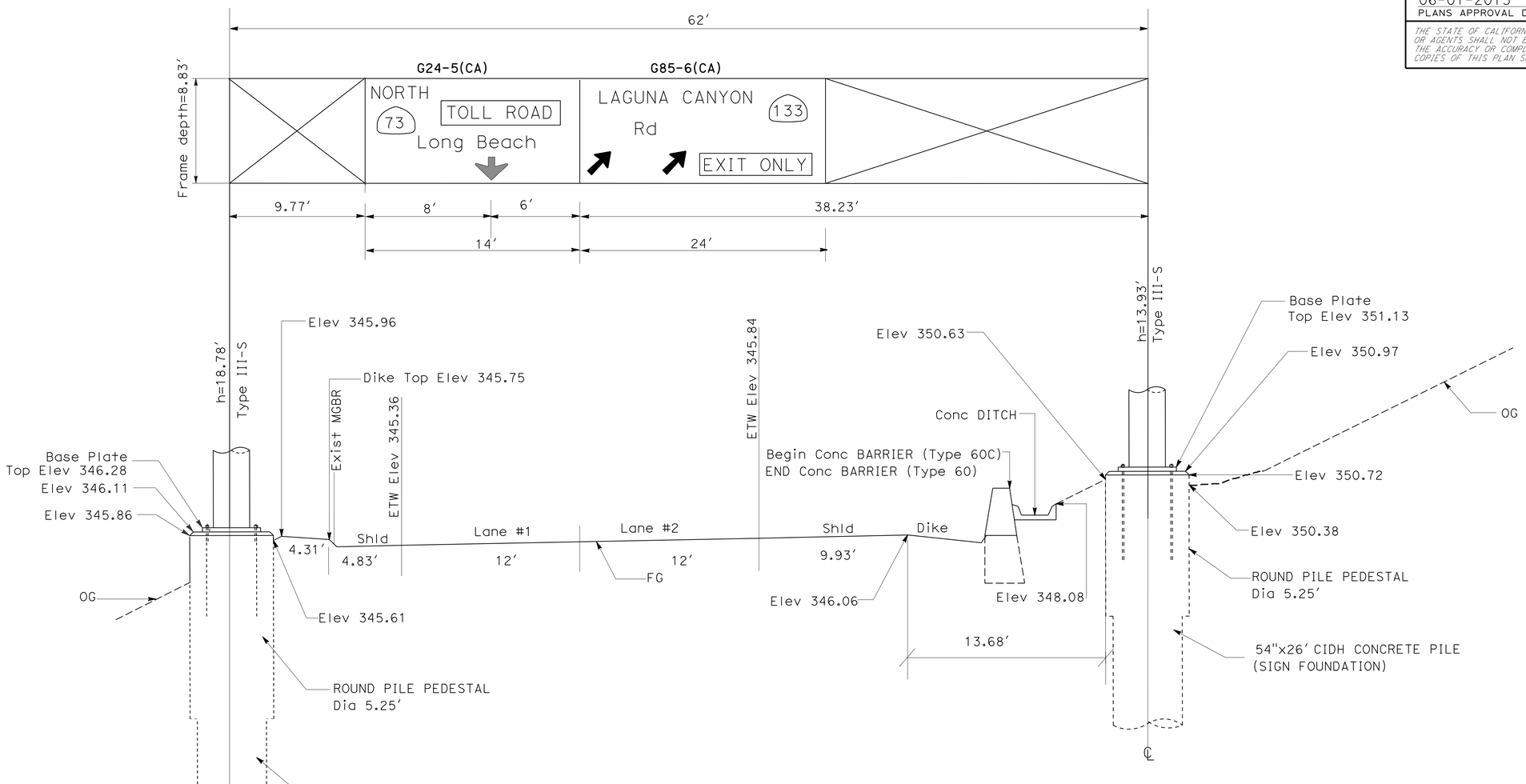

SIGN OS1-101

FNBT "B" Line Sta 769+50 Rte 73 NB Collector/El Toro-Laguna Canyon Exit Ramp

SIGN TYPE: TRUSS
SIGN PANEL: LAMINATED TYPE A

NOTES:

1. MAINTAIN MINIMUM 18′-6" VERTICAL CLEARENCE BETWEEN THE BOTTOM OF THE TRUSS FRAME AND THE HIGH POINT OF THE ROADWAY SURFACE BELOW
2. CONTRACTOR TO VERIFY ALL THE ELEVATIONS AND SIGN PANEL DIMENSIONS PRIOR TO FABRICATING ANY MATERIAL
3. INCLUDE APPROPRIATE CONDUIT AND PULL BOXES FOR FUTURE INSTALLATION OF POSSIBLE INTELLIGENT TRANSPORTATION SYSTEM (ITS) ELEMENTS. SEE ELECTRICAL PLANS
4. INCLUDE BEAMS SHOWN ON STANDARD PLAN S-16 INCASE FOR FUTURE LIGHTING.

SIGN DETAILS

NO SCALE

SD-1

STATE OF CALIFORNIA - DEPARTMENT OF TRANSPORTATION
Caltrans®
DESIGN BRANCH F

FUNCTIONAL SUPERVISOR: KAMRAN MAZHAR
CALCULATED-DESIGNED BY: BERNADETTE SURAWEERA
CHECKED BY: BERNADETTE SURAWEERA
REVISED BY
DATE REVISED

LAST REVISION 05-21-15
DATE PLOTTED => 22-SEP-2015
TIME PLOTTED => 10:42

Dist	COUNTY	ROUTE	POST MILES TOTAL PROJECT	SHEET No.	TOTAL SHEETS
12	Ora	73,133	16.6,4.2	39	107

REGISTERED CIVIL ENGINEER 05-26-2015 DATE

06-01-2015
PLANS APPROVAL DATE

REGISTERED PROFESSIONAL ENGINEER
BERNADETTE SURAWEERA
No. C77207
Exp. 06-30-15
CIVIL
STATE OF CALIFORNIA

THE STATE OF CALIFORNIA OR ITS OFFICERS OR AGENTS SHALL NOT BE RESPONSIBLE FOR THE ACCURACY OR COMPLETENESS OF SCANNED COPIES OF THIS PLAN SHEET.

G24-5(CA)

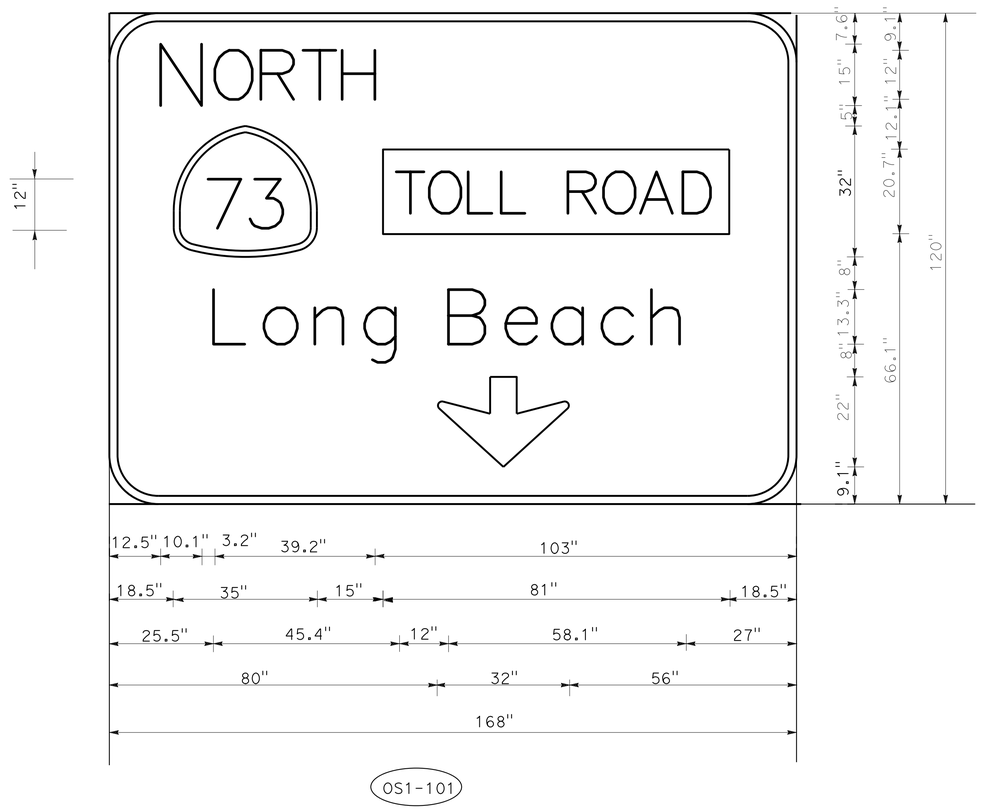

12.0" Radius, 2.0" Border, White on Green;
[NORTH] D;
[Long Beach] E Mod 90} spacing; Down Arrow 22.0" 270 DEGREE;
Table of distances between letter and object lefts.

	N	O	R	T	H	
12.5"	13.3"	11.2"	10.3"	9.6"	8.1"	103.0"

18.5"	73	—	18.5"
	50.0"	81.0"	

	L	o	n	g	B	e	a	c	h	
25.5"	12.3"	12.4"	12.2"	20.5"	14.0"	11.3"	12.1"	12.2"	8.5"	27.0"

122.0"	⇩ 32.0"	14.0"

M4-15Mod

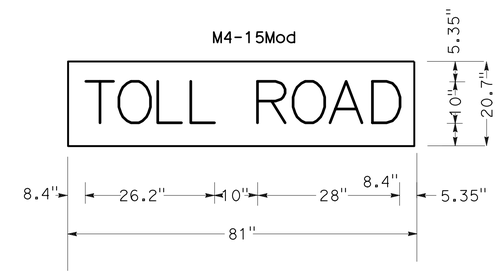

No border, Black on White;
[TOLL ROAD] C;

22.0" ARROW DETAIL

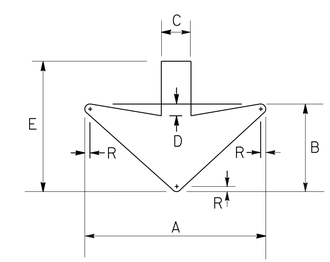

A	B	C	D	E	R
32"	16"	6-½"	3"	22"	1"

SIGN DETAILS

NO SCALE

SD-2

STATE OF CALIFORNIA - DEPARTMENT OF TRANSPORTATION
Caltrans
DESIGN BRANCH F

FUNCTIONAL SUPERVISOR: KAMRAN MAZHAR

CALCULATED-DESIGNED BY: BERNADETTE SURAWEERA
CHECKED BY: BERNADETTE SURAWEERA

REVISED BY
DATE REVISED

LAST REVISION 05-21-15
DATE PLOTTED => 22-SEP-2015
TIME PLOTTED => 10:42

Dist	COUNTY	ROUTE	POST MILES TOTAL PROJECT	SHEET No.	TOTAL SHEETS
12	Ora	73,133	16.6,4.2	40	107

REGISTERED CIVIL ENGINEER 05-26-2015 DATE

06-01-2015
PLANS APPROVAL DATE

REGISTERED PROFESSIONAL ENGINEER BERNADETTE SURAWEERA No. C77207 Exp. 06-30-15 CIVIL STATE OF CALIFORNIA

THE STATE OF CALIFORNIA OR ITS OFFICERS OR AGENTS SHALL NOT BE RESPONSIBLE FOR THE ACCURACY OR COMPLETENESS OF SCANNED COPIES OF THIS PLAN SHEET.

G85-6(CA)

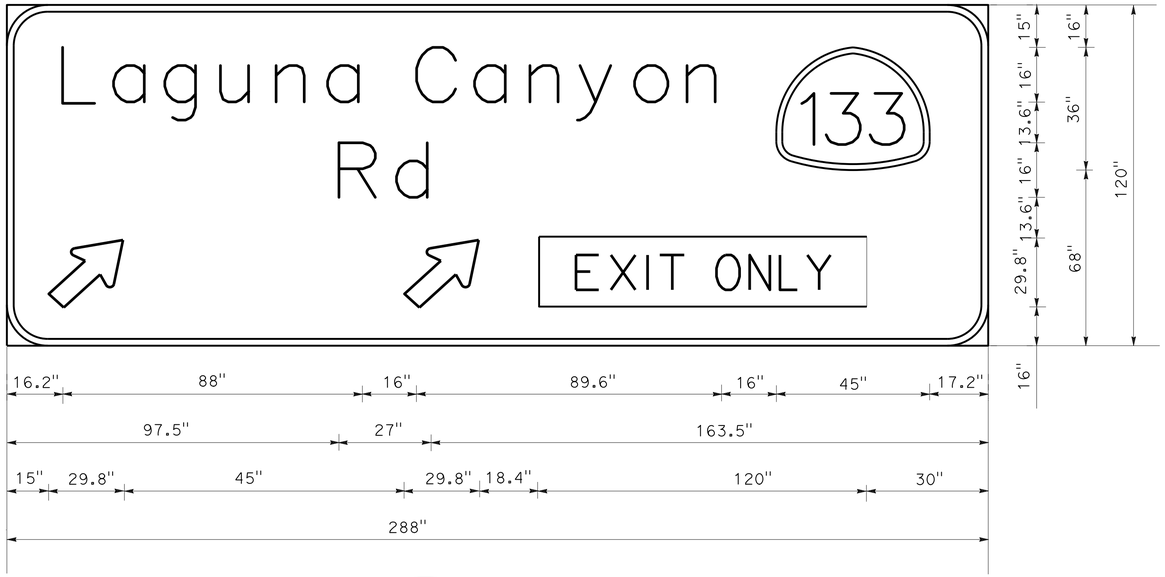

OH SIGN (OS1-101)

12.0" Radius, 2.0" Border, White on Green;

[Laguna Canyon] E Mod; [Rd] E Mod; Standard Arrow 25" X 21.875" 45 DEGREE;
[ ] E Mod; [ ] E Mod; [ ] E Mod; Standard Arrow Custom 25" X 21.875" 45 DEGREE

Table of distances between letter and object lefts.

	L	a	g	u	n	a	c	a	n	y	o	n	(133)	
16.2"	15.1"	15"	16.4"	16.3"	15.1"	26.1"	17"	16.3"	14.7"	16"	15.4"	26.2"	45"	17.2"

	R	d	
97.5"	16.8"	10.2"	163.5"

15"	⇗ 74.8"	⇗ 29.8"	168.4"

E11-1C DETAIL

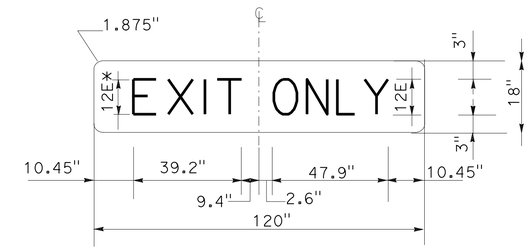

No Border, Black on Yellow;

* Increase Character spacing 40%

SIGNS (S2-9) (S2-13)

R61-14(CA)Mod

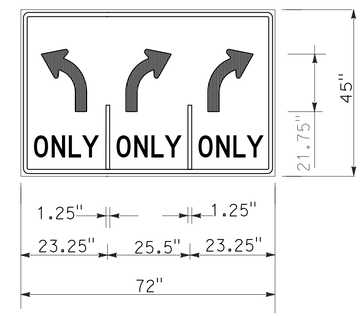

3" Radius, 1.25" Border, 0.75" Margin width,
Letter size 6D-1.08, Black on White;
See sign specification for dimensions not shown

SIGN (S2-21)

R61-13(CA)Mod

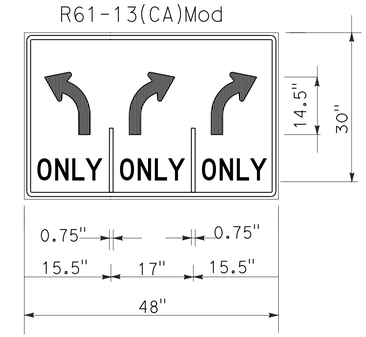

1.5" Radius, 0.75" Border, 0.5" Margin width,
Letter size 4D-0.72, Black on White;
See sign specification for dimensions not shown

25" 1 LINE ARROW DETAIL

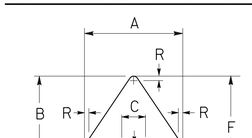

A	B	C	D	E	F	R
21-7/8"	14-1/4"	5"	6-3/4"	1-3/4"	25"	1"

SIGN DETAILS

NO SCALE

SD-3

STATE OF CALIFORNIA - DEPARTMENT OF TRANSPORTATION
Caltrans® DESIGN BRANCH F

FUNCTIONAL SUPERVISOR: KAMRAN MAZHAR

CALCULATED-DESIGNED BY: BERNADETTE SURAWEERA
CHECKED BY:

REVISED BY:
DATE REVISED:

LAST REVISION 05-27-15
DATE PLOTTED => 22-SEP-2015
TIME PLOTTED => 10:42

Dist	COUNTY	ROUTE	POST MILES TOTAL PROJECT	SHEET No.	TOTAL SHEETS
12	Ora	73,133	16.6,4.2	41	107

REGISTERED CIVIL ENGINEER 05-26-2015 DATE

06-01-2015
PLANS APPROVAL DATE

REGISTERED PROFESSIONAL ENGINEER BERNADETTE SURAWEERA No. C77207 Exp.06-30-15 CIVIL STATE OF CALIFORNIA

THE STATE OF CALIFORNIA OR ITS OFFICERS OR AGENTS SHALL NOT BE RESPONSIBLE FOR THE ACCURACY OR COMPLETENESS OF SCANNED COPIES OF THIS PLAN SHEET.

ROADSIDE SIGNS

SHEET	SIGN No.	SIGN CODE	SIGN PANEL SIZE (L X H)	POST SIZE & LENGTH (N) 4"X4"	4"x6"	6"x6"	ROADSIDE SIGN (ONE POST)	ROADSIDE SIGN (TWO POST)	INSTALL SIGN (STRAP & SADDLE BRACKET METHOD)	INSTALL SIGN PANEL ON SIGNAL MAST ARM (N)	REMOVE ROADSIDE SIGN	REMOVE ROADSIDE SIGN PANEL ON SIGNAL MAST ARM (N)	REMOVE ROADSIDE SIGN (STRAP & SADDLE BRACKET METHOD)	RELOCATE ROADSIDE SIGN- ONE POST	TREATED WOOD WASTE	REMARKS
			INCHXINCH	FT	FT	FT	EA	EA	EA	EA	EA	EA	EA	EA	LB	
S-1	S1-1	W13-2											1			
	S1-2	W13-2(30)	24 X 30						1							EXIT 30 MPH (strap to lamp post)
	S1-3	G84(CA)									1				146.81	
	S1-4	G84-2(6)(CA)	54 X 48		16			1								
	S1-5	W3-3									2				174.34	
	S1-6	W3-3	48 x 48			19	2									
S-2	S2-7	R61-11(CA)	54 x 45		16			2								
	S2-8	R61-3(CA)									1				82.16	
	S2-9	R61-14(CA)(MOD)	72 X 45			18		2								
	S2-10	W1-6(L+) OM1-3									3				410.81	a, b & c signs
	S2-11	W1-8(L+)	24 X 30		16		4									1, 2, 3 & 4 signs
	S2-12	R61-3(CA)									1				82.16	
	S2-13	R61-14(CA)(MOD)	72 X 45			18		2								
	S2-14	R5-1 R5-1a									2				110.46	
	S2-15	R5-1 R5-1a	36 X 36 42 X 30		12.1		2									
	S2-16	W11-2											1			Strap to signal post
	S2-17	W11-2 W16-7P(L+)	36 X 36 24 X 12		16		1									
	S2-18	R6-1(L+) & (R+)											2			Strap to signal post
	S2-19	R6-1(L+) & (R+)	36 X 12						2							Strap to signal post
	S2-20	R61-11(CA)										1				
	S2-21	R61-13(CA)(MOD)	48 X 30							1						
	S2-22	R6-1(L+) & (R+)	54 X 18	6.8				1								
	S2-23	OM1-3									1				22.77	
	S2-24	OM1-3	18 X 18	7.8			1									
	S2-25	G28-7; M3-1; M6-2a												1		SEE SHEET S-2, FOR PANEL DETAILS
TOTAL							10	8	3		11		4	1	1029.51	

(N) = NOT A SEPARATE PAY ITEM, FOR INFORMATION ONLY

SIGN QUANTITIES
SQ-1

STATE OF CALIFORNIA - DEPARTMENT OF TRANSPORTATION
Caltrans® DESIGN BRANCH F

FUNCTIONAL SUPERVISOR: KAMRAN MAZHAR
CALCULATED-DESIGNED BY: BERNADETTE SURAWEERA
CHECKED BY: BERNADETTE SURAWEERA
REVISED BY
DATE REVISED

LAST REVISION 05-21-15
DATE PLOTTED => 22-SEP-2015
TIME PLOTTED => 10:43

Dist	COUNTY	ROUTE	POST MILES TOTAL PROJECT	SHEET No.	TOTAL SHEETS
12	Ora	73,133	16.6,4.2	42	107

REGISTERED CIVIL ENGINEER DATE 05-26-2015

06-01-2015
PLANS APPROVAL DATE

REGISTERED PROFESSIONAL ENGINEER
BERNADETTE SURAWEERA
No. C77207
Exp.06-30-15
CIVIL
STATE OF CALIFORNIA

THE STATE OF CALIFORNIA OR ITS OFFICERS OR AGENTS SHALL NOT BE RESPONSIBLE FOR THE ACCURACY OR COMPLETENESS OF SCANNED COPIES OF THIS PLAN SHEET.

OVERHEAD SIGNS

SHEET	LOCATION	SIGN No.	FURNISH SIGN STRUCTURE (TRUSS)	INSTALL SIGN STRUCTURE (TRUSS)	54" CIDH CONCRETE PILE (SIGN FOUNDATION)	REMOVE SIGN STRUCTURE OS1-100
			LB	LB	LF	EA
S-1	"B" Line Sta 769+50	OS1-101	23643	23643	52	1
TOTAL			23643	23643	52	1

SIGN QUANTITIES

SQ-2

STATE OF CALIFORNIA - DEPARTMENT OF TRANSPORTATION
Caltrans® DESIGN BRANCH F

FUNCTIONAL SUPERVISOR: KAMRAN MAZHAR
CALCULATED-DESIGNED BY: BERNADETTE SURAWEERA
CHECKED BY: BERNADETTE SURAWEERA
REVISED BY
DATE REVISED

LAST REVISION 05-21-15
DATE PLOTTED => 22-SEP-2015
TIME PLOTTED => 10:43

Dist	COUNTY	ROUTE	POST MILES TOTAL PROJECT	SHEET No.	TOTAL SHEETS
12	Ora	73,133	16.6,4.2	43	107

REGISTERED CIVIL ENGINEER 05-26-2015 DATE

06-01-2015
PLANS APPROVAL DATE

REGISTERED PROFESSIONAL ENGINEER BERNADETTE SURAWEERA No. C77207 Exp.06-30-15 CIVIL STATE OF CALIFORNIA

THE STATE OF CALIFORNIA OR ITS OFFICERS OR AGENTS SHALL NOT BE RESPONSIBLE FOR THE ACCURACY OR COMPLETENESS OF SCANNED COPIES OF THIS PLAN SHEET.

MATERIAL SUMMARY (CONTRACTOR FURNISHED SIGNS)

SHEET No.	SIGN No.	SIGN CODE	PANEL SIZE	NUMBER OF PANELS	SINGLE FACED	SIGN FACING MATERIAL					ROADSIDE					OVERHEAD		RETROREFLECTIVE SHEETING TYPE XI
						BACKGROUND		LEGENDS			FURNISH SINGLE SHEET ALUMINUM SIGN			FURNISH SINGLE SHEET ALUMINUM SIGN FOR RETROREFLECTIVE SHEETING TYPE XI UNFRAMED		FURNISH LAMINATED PANEL SIGN (1"-TYPE A) FOR RETROREFLECTIVE SHEETING		
						SHEETING COLOR	RETROREFLECTIVE ASTM TYPE	SHEETING COLOR	RETROREFLECTIVE ASTM TYPE	PROTECTIVE FILM PREMIUM	UNFRAMED 0.063"	UNFRAMED 0.080"	0.063" FRAMED	0.063"	0.080"	TYPE XI	TYPE V111	
			INCH X INCH								SQFT	SQFT	SQFT	SQFT	SQFT	SQFT	SQFT	SQFT
S-1	S1-2	W13-2(30)	24 x 30	1	X	FY	X1	B	non	X				5.0				5.0
	S1-4	G84-2(6)(CA)	54 x 48	1	X	G	X1	W	X1	X					18.0			18.0
	S1-6	W3-3	48 X 48	2	X	FY	X1	R/G	X1	X					32.0			32.0
	OS1-101	G24-5(CA)	168 x 120	1	X	G	X1	W	X1	X						140.0		140.0
		M4-15Mod	81 x 20.7	1	X	W	V111	B	non	X							11.64	
		G85-6(CA)	288 x 120	1	X	G	X1	W	X1	X						240.0		240.0
		E11-1c	120 x 18	1	X	FY	X1	B	non	X						15		15
S-2	S2-7	R61-11(CA)	54 X 45	2	X	W	V111	B	non	X		33.75						
	S2-9	R61-14(CA)(MOD)	72 X 45	2	X	W	V111	B	non	X			45.0					
	S2-11	W1-8(Lt)	24 X 30	4	X	FY	X1	B	non	X				20				20
	S2-13	R61-14(CA)(MOD)	72 X 45	2	X	W	V111	B	non	X			45.0					
	S2-15	R5-1	36 X 36	2	X	W	V111	R/W	V111	X	18.0							
		R5-1a	42 X 30	2	X	R	X1	W	X1	X	17.5							17.5
	S2-17	W11-2	30 X 36	1	X	FYG	X1	B	non	X				7.5				7.5
		W16-7P(Lt)	24 X 12	1	X	FYG	X1	B	non	X				2.0				2.0
	S2-19	R6-1(Lt) & (Rt)	36 X 12	2	X	W	V111	B	non	X	6.0							
	S2-21	R61-13(CA)(MOD)	48 X 30	1	X	W	V111	B	non	X		10.0						
	S2-22	R6-1(Lt) & (Rt)	54 X 18	2	X	W	V111	B	non	X		13.5						
	S2-24	OM1-3	18 X 18	1	X	FY	V111	B	non	X	2.25							2.25
TOTAL											43.75	57.25	90.00	34.5	50.00	395.00	11.64	499.25

LEGENDS:

B = BLACK (Non-Reflective)
W = WHITE
R = RED
G = GREEN
FYG = FLUORESCENT YELLOW-GREEN
FY = FLUORESCENT YELLOW
non = Non-Reflective

SIGN PANEL QUANTITIES

SQ-3

STATE OF CALIFORNIA - DEPARTMENT OF TRANSPORTATION
Caltrans® DESIGN BRANCH F
FUNCTIONAL SUPERVISOR KAMRAN MAZHAR
CALCULATED-DESIGNED BY BERNADETTE SURAWEERA
CHECKED BY BERNADETTE SURAWEERA
REVISED BY
DATE REVISED

LAST REVISION 05-21-15
DATE PLOTTED => 22-SEP-2015
TIME PLOTTED => 10:43

Dist	COUNTY	ROUTE	POST MILES TOTAL PROJECT	SHEET No.	TOTAL SHEETS
12	Ora	73,133	16.6,4.2	44	107

REGISTERED CIVIL ENGINEER 05-26-2015 DATE

06-01-2015
PLANS APPROVAL DATE

REGISTERED PROFESSIONAL ENGINEER FAZLOLLAH ZIAIE No. C59746 Exp.12/31/15 CIVIL STATE OF CALIFORNIA

THE STATE OF CALIFORNIA OR ITS OFFICERS OR AGENTS SHALL NOT BE RESPONSIBLE FOR THE ACCURACY OR COMPLETENESS OF SCANNED COPIES OF THIS PLAN SHEET.

ROADWAY QUANTITIES

SHEET No.	STATION	GRIND EXISTING CONCRETE PAVEMENT	RECONSTRUCT GUARDRAIL	RUBBERIZED HOT MIX ASPHALT (GAP GRADED)	TACK COAT	HOT MIX ASPHALT (TYPE A)	CLASS 2 AGGREGATE BASE	CLASS 2 AGGREGATE SUBBASE	PLACE HMA DIKE (TYPE E)	MINOR CONCRETE (Misc CONSTRUCTION)	CONCRETE BARRIER (TYPE 60)	MINOR CONCRETE (GUTTER)	RUBBERIZED HOT MIX ASPHALT (OPEN GRADED FRICTION COURSE)	CONCRETE BARRIER (TYPE 60C)	3" PLASTIC PIPE (EDGEDRAIN OUTLET)	REMOVE GUARDRAIL	COLD PLANE ASPHALT CONCRETE PAVEMENT	DETECTABLE WARNING SURFACE	PLACE HOT MIX ASPHALT (MISCELLANEOUS AREA)
		SQYD	LF	TON	TON	TON	CY	CY	LF	CY	LF	LF	CY	LF	LF	LF	SQYD	SQFT	SQYD
L - 1	"B" 767+95 TO 769+50					14													187
	"B" 769+95 TO 769+22.61									10									
	"B" 769+51											29							
	"B" 769+50 TO 771+80			27		53	55	51					17						
	"A" 71+80 TO 80+30			164	0.1	327	334	313					71						
	"B" 769+50 TO "A" 80+50																240		
	"A" 80+50 TO 88+25.89																225		
	"B" 767+95 TO 769+50										245								
	"B" 769+50 TO 769+90.95													41	50				
	"A" 80+22.10 TO 80+24.65													3					
	"B" 769+35 TO 769+65		30																
	"B" 771+45 TO 771+75		30													70			
L - 2	"A" 80+30 TO 87+64			125	0.1	246	209	216					49						
	"A" 87+64 TO 88+16																		
	"A" 80+68.11 TO 85+57.07					3			589										
	"A" 88+02.94 TO 88+10.88	5																15	
	"A" 88+20.07 TO 88+25.89	5																15	
	TOTAL	10	60	316	0.2	643	598	580	589	10	245	29	137	44	50	70	465	30	187

EARTHWORK QUANTITIES

SHEET No.	STATION	ROADWAY EXCAVATION	ROADWAY EMBANKMENT (N)
		CY	CY
L-1	"B" 767+95 TO 771+80	223	88
	"A" 71+80 TO "A" 80+30	1421	
L-2	"A" 80+30 TO "A" 84.00	2811	
	"A" 84+00 TO "A" 86.90	408	5
	"A" 86+90 TO "A" 87.65	63	10
TOTAL		4926	24

(N) = NOT A SEPARATE PAY ITEM , FOR INFORMATION ONLY

SUMMARY OF QUANTITIES

Q-1

STATE OF CALIFORNIA - DEPARTMENT OF TRANSPORTATION
Caltrans DESIGN

FUNCTIONAL SUPERVISOR: MATTHEW Q. CUGINI

CALCULATED-DESIGNED BY: STEVEN LE

CHECKED BY

REVISED BY

DATE REVISED

LAST REVISION 5-29-15

DATE PLOTTED => 22-SEP-2015
TIME PLOTTED => 10:43

Dist	COUNTY	ROUTE	POST MILES TOTAL PROJECT	SHEET No.	TOTAL SHEETS
12	Ora	73,133	16.6,4.2	45	107

Ronald Wong 05-26-2015
LICENSED LANDSCAPE ARCHITECT

06-01-2015
PLANS APPROVAL DATE

LICENSED LANDSCAPE ARCHITECT RONALD WONG NO. 1555 STATE OF CALIFORNIA
Ronald Wong
Expiration Date 01/31/16
Registered Owner
05/26/15
Date

THE STATE OF CALIFORNIA OR ITS OFFICERS OR AGENTS SHALL NOT BE RESPONSIBLE FOR THE ACCURACY OR COMPLETENESS OF SCANNED COPIES OF THIS PLAN SHEET.

SEED MIX TABLE

SEED	BOTANICAL NAME (COMMON NAME)	PERCENT GERMINATION (MINIMUM)	POUNDS PURE LIVE SEED PER ACRE (SLOPE MEASUREMENT)
MIX 1 (A)(B) (coastal sage scrub)	ARTEMISIA CALIFORNIA (CALIFORNIA SAGEBRUSH)	30%	0.2
	BACCHARIS PILULARIS (COYOTE BUSH)	25%	0.05
	BACCHARIS SALICIFOLIA (MULE FAT)	10%	0.05
	DIPLACUS AURANTIACUS (MONKEY FLOWER)	37%	0.1
	ENCELIA CALIFORNIA (CALIFORNIA ENCELIA)	22%	1.0
	ERIOGONUM FASCICULATUM (CALIFORNIA BUCKWHEAT)	5%	1.0
	ERIOPHYLLUM CONFERTIFLORUM (GOLDEN YARROW)	31%	1.0
	ISOCOMA MENZIESII (COAST GOLDENBUSH)	20%	1.0
	LOTUS SCORPIUS (DEER WEED)	40%	4.0
	LUPINUS LONGIFOLIA (LONGLEAF BUSH LUPINE)	36%	1.0
	PLANTGO ERECTA (CALIFORNIA PLANTAIN)	44%	15.0
	RHUS INTEGRIFOLIA (LEMONADE BERRY)	38%	2.0
	SALVIA APIANA (WHITE SAGE)	15%	2.0
	SALVIA MELLIFERA (BLACK SAGE)	25%	3.0
	SAMBUCUS NIGRA (BLACK ELDERBERRY)	30%	1.0
	STIPA LEPIDA (FOOTHILL NEDDLE GRASS)	35%	5.0
		TOTAL	37.4

(A) SEED PRODUCED IN CALIFORNIA ONLY.
(B) SEED SOURCE FROM COASTAL REGION OF ORANGE COUNTY, SAN DIEGO COUNTY, AND LOS ANGELES COUNTY ONLY.

FIBER ROLLS

SEQUENCE	ITEM	MATERIAL		REMARKS
		DESCRIPTION	TYPE	
In Erosion Control areas Fiber Rolls must be installed after RECP (Netting) and before Hydroseed.	FIBER ROLLS	FIBER ROLL	TYPE B 8" TO 10" Dia	Type 1 Fiber Roll installation

EROSION CONTROL

SEQUENCE	ITEM	MATERIAL		APPLICATION RATE
		DESCRIPTION	TYPE	
STEP 1A	ROLLED EROSION CONTROL PRODUCT (NETTING)	NETTING	TYPE B	---
STEP 1B	PLANT (GROUP A)	PLANTING	---	---
STEP 2	HYDROSEED	SEED	MIX 1	75 LB/ACRE
		FIBER	WOOD	1500 LB/ACRE
		COMPOST	MEDIUM	2 CY/ACRE
STEP 3	HYDROMULCH	FIBER	WOOD	2000 LB/ACRE
		TACKIFIER	GUAR	125 LB/ACRE

EROSION CONTROL LEGEND

ECL-1

REVISED BY | DATE REVISED
RONALD WONG | DEEDEE MARTINEZ
CALCULATED-DESIGNED BY | CHECKED BY
SENIOR LANDSCAPE ARCHITECT | ERIC DICKSON
STATE OF CALIFORNIA - DEPARTMENT OF TRANSPORTATION
Caltrans® LANDSCAPE ARCHITECTURE

LAST REVISION 05-20-15 | DATE PLOTTED => 22-SEP-2015 | TIME PLOTTED => 10:43

Dist	COUNTY	ROUTE	POST MILES TOTAL PROJECT	SHEET No.	TOTAL SHEETS
12	Ora	73,133	16.6,4.2	46	107

Ronald Wong 05-26-2015
LICENSED LANDSCAPE ARCHITECT

06-01-2015
PLANS APPROVAL DATE

LICENSED LANDSCAPE ARCHITECT RONALD WONG NO. 1555 — Expiration Date 01/31/16 — Renewal Date 05/26/15 — STATE OF CALIFORNIA

THE STATE OF CALIFORNIA OR ITS OFFICERS OR AGENTS SHALL NOT BE RESPONSIBLE FOR THE ACCURACY OR COMPLETENESS OF SCANNED COPIES OF THIS PLAN SHEET.

NOTE:

FOR ACCURATE RIGHT OF WAY DATA, CONTACT RIGHT OF WAY ENGINEERING AT THE DISTRICT OFFICE.

EROSION CONTROL QUANTITIES

SHEET	DESCRIPTION	SEED (MIX 1) (n)	ROLLED EROSION CONTROL PRODUCT (NETTING)	HYDROSEED	HYDROMULCH	COMPOST (n)	FIBER ROLLS
		LB	SQFT	SQFT	SQFT	CY	LF
EC-1	EROSION CONTROL	11.03	12,850	12,850	12,850	0.590	
	FIBER ROLLS						1,100
EC-2	EROSION CONTROL	28.76	33,500	33,500	33,500	1.538	
	FIBER ROLLS						3,400
	TOTAL	39.79	46,350	46,350	46,350	2.128	4,500

LEGEND

EROSION CONTROL AREA

FR FIBER ROLL

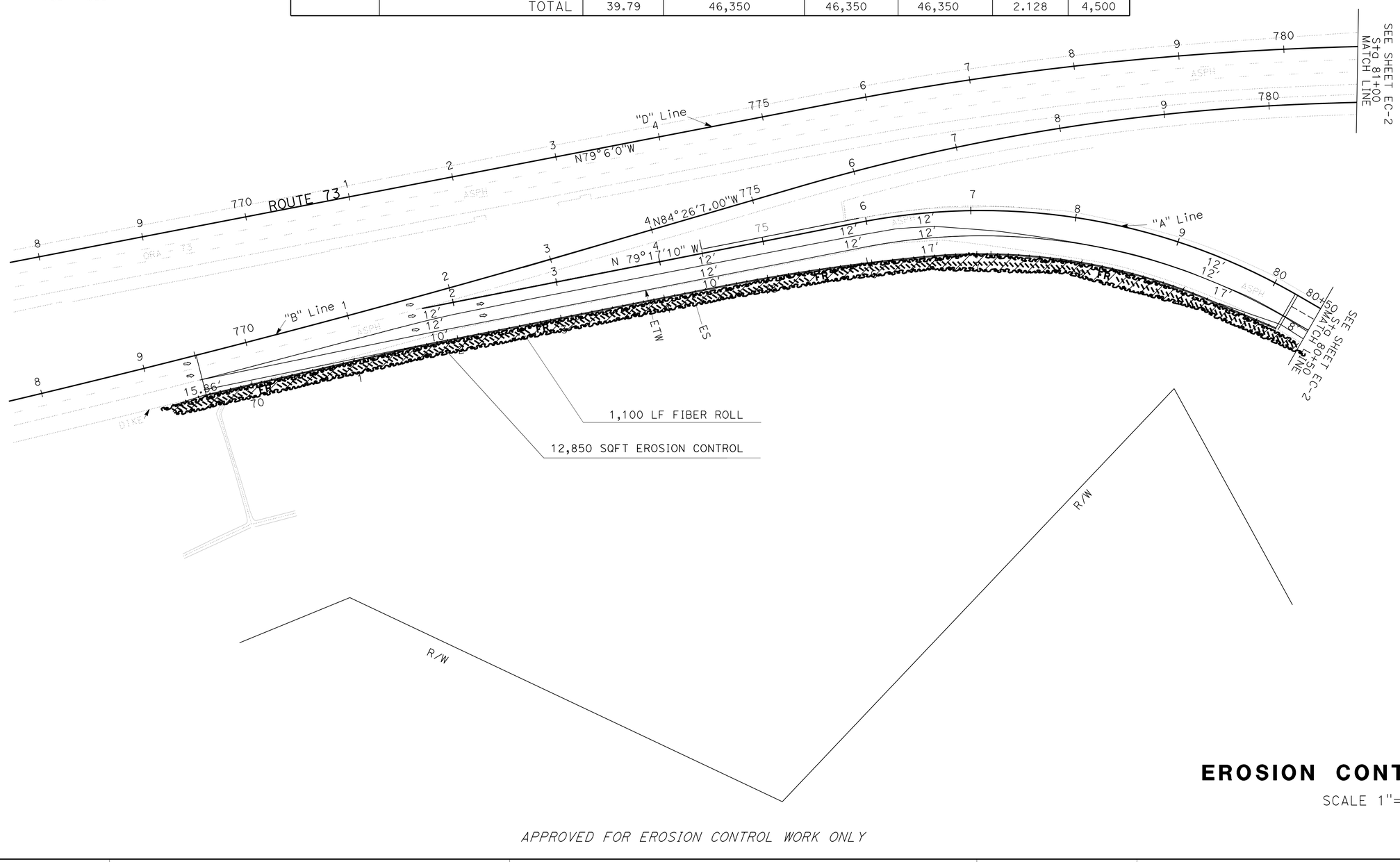

EROSION CONTROL PLAN

SCALE 1"=50'

EC-1

APPROVED FOR EROSION CONTROL WORK ONLY

STATE OF CALIFORNIA - DEPARTMENT OF TRANSPORTATION
Caltrans LANDSCAPE ARCHITECTURE

SENIOR LANDSCAPE ARCHITECT: ERIC DICKSON

CALCULATED-DESIGNED BY: RONALD WONG
CHECKED BY: RONALD WONG

REVISED BY / DATE REVISED

LAST REVISION 05-20-15 — DATE PLOTTED => 22-SEP-2015 — TIME PLOTTED => 10:43

Dist	COUNTY	ROUTE	POST MILES TOTAL PROJECT	SHEET No.	TOTAL SHEETS
12	Ora	73,133	16.6,4.2	47	107

Ronald Wong 05-26-2015
LICENSED LANDSCAPE ARCHITECT

06-01-2015
PLANS APPROVAL DATE

LICENSED LANDSCAPE ARCHITECT RONALD WONG NO. 1555 STATE OF CALIFORNIA
Ronald Wong
Expiration Date 01/31/16
Renewal Date 05/26/15
Date

THE STATE OF CALIFORNIA OR ITS OFFICERS OR AGENTS SHALL NOT BE RESPONSIBLE FOR THE ACCURACY OR COMPLETENESS OF SCANNED COPIES OF THIS PLAN SHEET.

NOTE:

FOR ACCURATE RIGHT OF WAY DATA, CONTACT
RIGHT OF WAY ENGINEERING AT THE DISTRICT OFFICE.

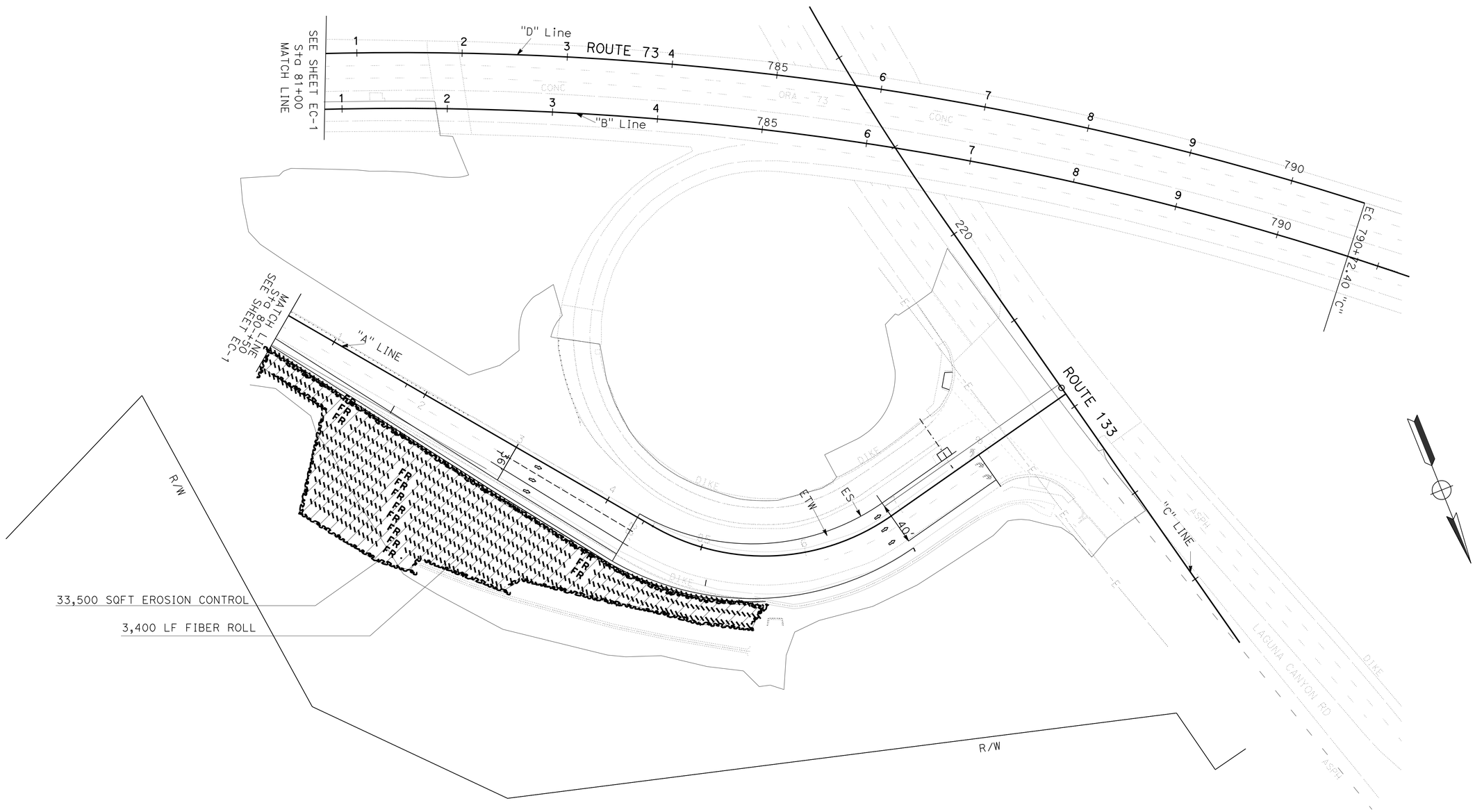

EROSION CONTROL PLAN

SCALE 1"=50'

EC-2

APPROVED FOR EROSION CONTROL WORK ONLY

STATE OF CALIFORNIA - DEPARTMENT OF TRANSPORTATION
Caltrans® LANDSCAPE ARCHITECTURE

SENIOR LANDSCAPE ARCHITECT: ERIC DICKSON
CALCULATED-DESIGNED BY: RONALD WONG
CHECKED BY: RONALD WONG
REVISED BY
DATE REVISED

LAST REVISION 05-20-15
DATE PLOTTED => 22-SEP-2015
TIME PLOTTED => 10:43

Dist	COUNTY	ROUTE	POST MILES TOTAL PROJECT	SHEET No.	TOTAL SHEETS
12	Ora	73,133	16.6,4.2	48	107

REGISTERED ELECTRICAL ENGINEER 05-26-2015 DATE

PLANS APPROVAL DATE 06-01-2015

REGISTERED PROFESSIONAL ENGINEER S. SHAHRIARI No. E 13485 Exp. 9/30/16 ELECTRICAL STATE OF CALIFORNIA

THE STATE OF CALIFORNIA OR ITS OFFICERS OR AGENTS SHALL NOT BE RESPONSIBLE FOR THE ACCURACY OR COMPLETENESS OF SCANNED COPIES OF THIS PLAN SHEET.

NOTE:

FOR ACCURATE RIGHT OF WAY DATA, CONTACT RIGHT OF WAY ENGINEERING AT THE DISTRICT OFFICE.

EXISTING CONDUCTOR AND CONDUIT SCHEDULE

CONDUCTOR	CONDUCTOR RUN	1	2	3	4	5	6	7
12CSC	VEHICLE SIGNALS	7	2	1	1	2	4	4
3CSC	PBA	2	2	1	1			
#10	SAFETY LIGHTING		2	2		2	2	2
#6	CONTROLLER POWER	2						
DLC	Ø1	1						1
	Ø2	2	2	2	2			
	Ø4	4	4					
	Ø6	2					2	2
TOTAL DLC		9	6	2	2		2	3
CONDUIT SIZE		2-3"	3"	3"	2"	2"	3"	3"

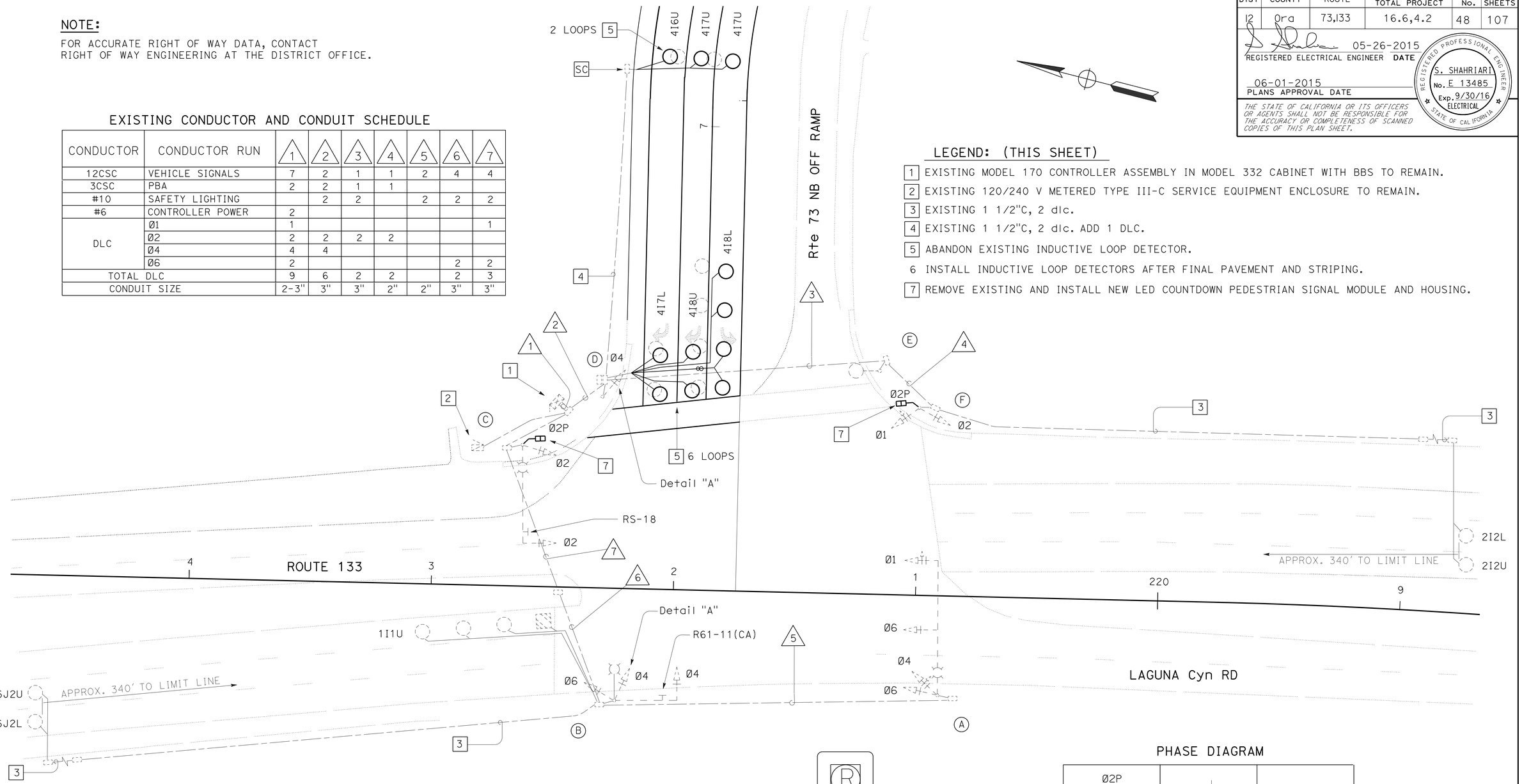

LEGEND: (THIS SHEET)

1. EXISTING MODEL 170 CONTROLLER ASSEMBLY IN MODEL 332 CABINET WITH BBS TO REMAIN.
2. EXISTING 120/240 V METERED TYPE III-C SERVICE EQUIPMENT ENCLOSURE TO REMAIN.
3. EXISTING 1 1/2"C, 2 dlc.
4. EXISTING 1 1/2"C, 2 dlc. ADD 1 DLC.
5. ABANDON EXISTING INDUCTIVE LOOP DETECTOR.
6. INSTALL INDUCTIVE LOOP DETECTORS AFTER FINAL PAVEMENT AND STRIPING.
7. REMOVE EXISTING AND INSTALL NEW LED COUNTDOWN PEDESTRIAN SIGNAL MODULE AND HOUSING.

EXISTING STANDARD AND EQUIPMENT SCHEDULE

STANDARD				VEH SIG MTG		PED SIGNAL MTG	PPB		LUMINAIRE	SPECIAL REQUIREMENTS
⊗	TYPE	SMA	LMA	MAST ARM	POLE		Ø	ARROW		
A	29-5-80	55'	12'	2-MAS	SV-2-TB				200 W	
B	19-3-80	25'	12'	MAS	SV-2-TA				200 W	
C	26-4-80	40'	12'	MAS	SV-1-T	SP-1-T (*)			200 W	
D	1-A				TV-1-T		2	→		
E	15		12'				2	←	200 W	
F	1-A				TV-2-T	SP-1-T (*)				

(*) - REMOVE EXISTING AND INSTALL NEW PED SIGNAL MOUNTING

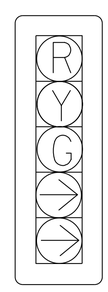

Detail "A"

PHASE DIAGRAM

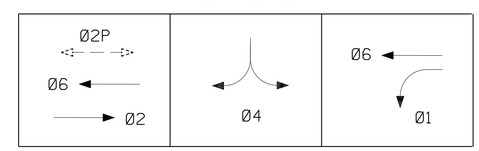

MODIFY SIGNAL AND LIGHTING

SCALE: 1" = 50'

E-1

APPROVED FOR ELECTRICAL WORK ONLY

STATE OF CALIFORNIA - DEPARTMENT OF TRANSPORTATION

Caltrans® ELECTRICAL DESIGN

FUNCTIONAL SUPERVISOR: SHAHRAM SHAHRIARI

CALCULATED-DESIGNED BY: ANTHONY C FERNANDEZ

CHECKED BY: VANESSA TRUONG

REVISED BY | DATE REVISED

LAST REVISION 05-20-15 | DATE PLOTTED => 22-SEP-2015 | TIME PLOTTED => 10:43

Dist	COUNTY	ROUTE	POST MILES TOTAL PROJECT	SHEET No.	TOTAL SHEETS
12	Ora	73,133	16.6,4.2	49	107

REGISTERED ELECTRICAL ENGINEER 05-26-2015 DATE

06-01-2015
PLANS APPROVAL DATE

REGISTERED PROFESSIONAL ENGINEER
S. SHAHRIARI
No. E 13485
Exp. 9/30/16
ELECTRICAL
STATE OF CALIFORNIA

THE STATE OF CALIFORNIA OR ITS OFFICERS OR AGENTS SHALL NOT BE RESPONSIBLE FOR THE ACCURACY OR COMPLETENESS OF SCANNED COPIES OF THIS PLAN SHEET.

NOTES: (THIS SHEET ONLY)

1. FOR ACCURATE RIGHT OF WAY DATA, CONTACT RIGHT OF WAY ENGINEERING AT THE DISTRICT OFFICE.
2. FOR SERVICE DISCONNECT, SEE WIRING DIAGRAM ON SHEET E-5.

LEGEND: (THIS SHEET ONLY)

NEW WOOD POLE WITH 15' LUMINAIRE MAST ARM AND ROADWAY 2 LED LUMINAIRE.

LOCAL VAULT (POWER)

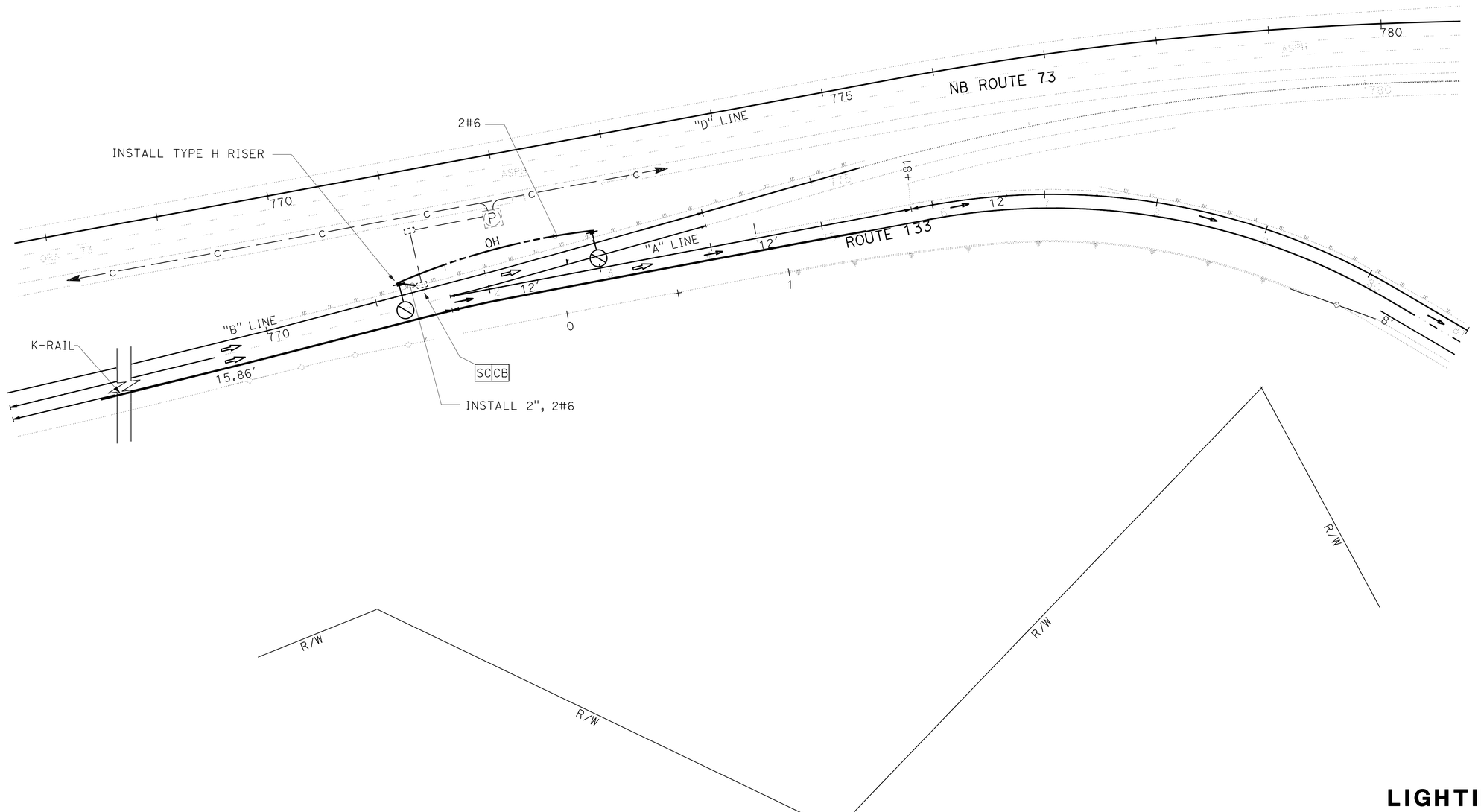

LIGHTING (TEMPORARY)

SCALE: 1" = 50'

E-2

APPROVED FOR ELECTRICAL WORK ONLY

STATE OF CALIFORNIA - DEPARTMENT OF TRANSPORTATION
Caltrans® **ELECTRICAL DESIGN**

FUNCTIONAL SUPERVISOR: SHAHRAM SHAHRIARI
CALCULATED-DESIGNED BY: ANTHONY C FERNANDEZ
CHECKED BY: VANESSA TRUONG
REVISED BY
DATE REVISED

LAST REVISION 05-21-15
DATE PLOTTED => 22-SEP-2015
TIME PLOTTED => 10:43

Dist	COUNTY	ROUTE	POST MILES TOTAL PROJECT	SHEET No.	TOTAL SHEETS
12	Ora	73,133	16.6,4.2	50	107

REGISTERED ELECTRICAL ENGINEER 05-26-2015 DATE

06-01-2015
PLANS APPROVAL DATE

REGISTERED PROFESSIONAL ENGINEER S. SHAHRIARI No. E 13485 Exp. 9/30/16 ELECTRICAL STATE OF CALIFORNIA

THE STATE OF CALIFORNIA OR ITS OFFICERS OR AGENTS SHALL NOT BE RESPONSIBLE FOR THE ACCURACY OR COMPLETENESS OF SCANNED COPIES OF THIS PLAN SHEET.

NOTES: (SHEETS E-3 AND E-4)

1. FOR ACCURATE RIGHT OF WAY DATA, CONTACT RIGHT OF WAY ENGINEERING AT THE DISTRICT OFFICE.
2. INSTALL 2"C WITH 2#6, UNLESS OTHERWISE NOTED.
3. SEE DRAINAGE PLANS PRIOR TO INSTALLATION OF CONDUITS AND ELECTROLIER FOUNDATIONS.
4. MODIFY POLE TO MAINTAIN HEIGHT OF 35' FROM FINISH GRADE.
5. SEE WIRING DIAGRAM FOR NUMBER OF CONDUCTORS AND CONDUCTOR SIZE.
6. FOR WIRING DIAGRAM SEE SHEET E-5.

[7] 2.5'Ø X 8.0' CIDH PILE FOUNDATION (MODIFIED).

[8] INSTALL 2"C WITH PULL ROPE FOR FUTURE USE.

LEGEND: (THIS SHEET ONLY)

(P) LOCAL VAULT (POWER)

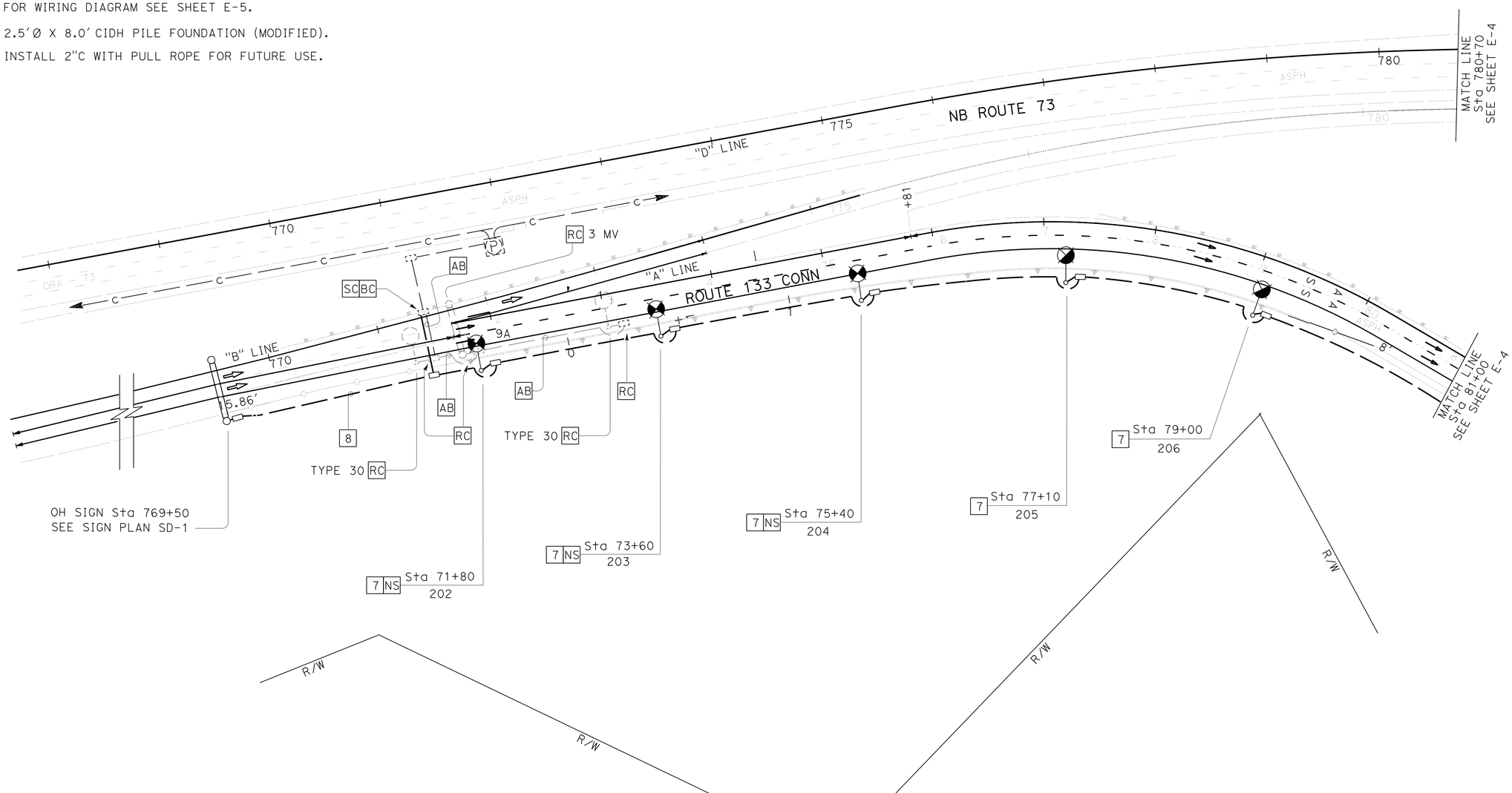

MODIFY LIGHTING AND SIGN ILLUMINATION

SCALE: 1" = 50'

E-3

APPROVED FOR ELECTRICAL WORK ONLY

STATE OF CALIFORNIA - DEPARTMENT OF TRANSPORTATION
Caltrans ELECTRICAL DESIGN

FUNCTIONAL SUPERVISOR: SHAHRAM SHAHRIARI
CALCULATED-DESIGNED BY: ANTHONY C FERNANDEZ
CHECKED BY: VANESSA TRUONG
REVISED BY / DATE REVISED

LAST REVISION 05-21-15
DATE PLOTTED => 22-SEP-2015
TIME PLOTTED => 10:43

Dist	COUNTY	ROUTE	POST MILES TOTAL PROJECT	SHEET No.	TOTAL SHEETS
12	Ora	73,133	16.6,4.2	51	107

05-26-2015
REGISTERED ELECTRICAL ENGINEER DATE

06-01-2015
PLANS APPROVAL DATE

REGISTERED PROFESSIONAL ENGINEER
S. SHAHRIARI
No. E 13485
Exp. 9/30/16
ELECTRICAL
STATE OF CALIFORNIA

THE STATE OF CALIFORNIA OR ITS OFFICERS OR AGENTS SHALL NOT BE RESPONSIBLE FOR THE ACCURACY OR COMPLETENESS OF SCANNED COPIES OF THIS PLAN SHEET.

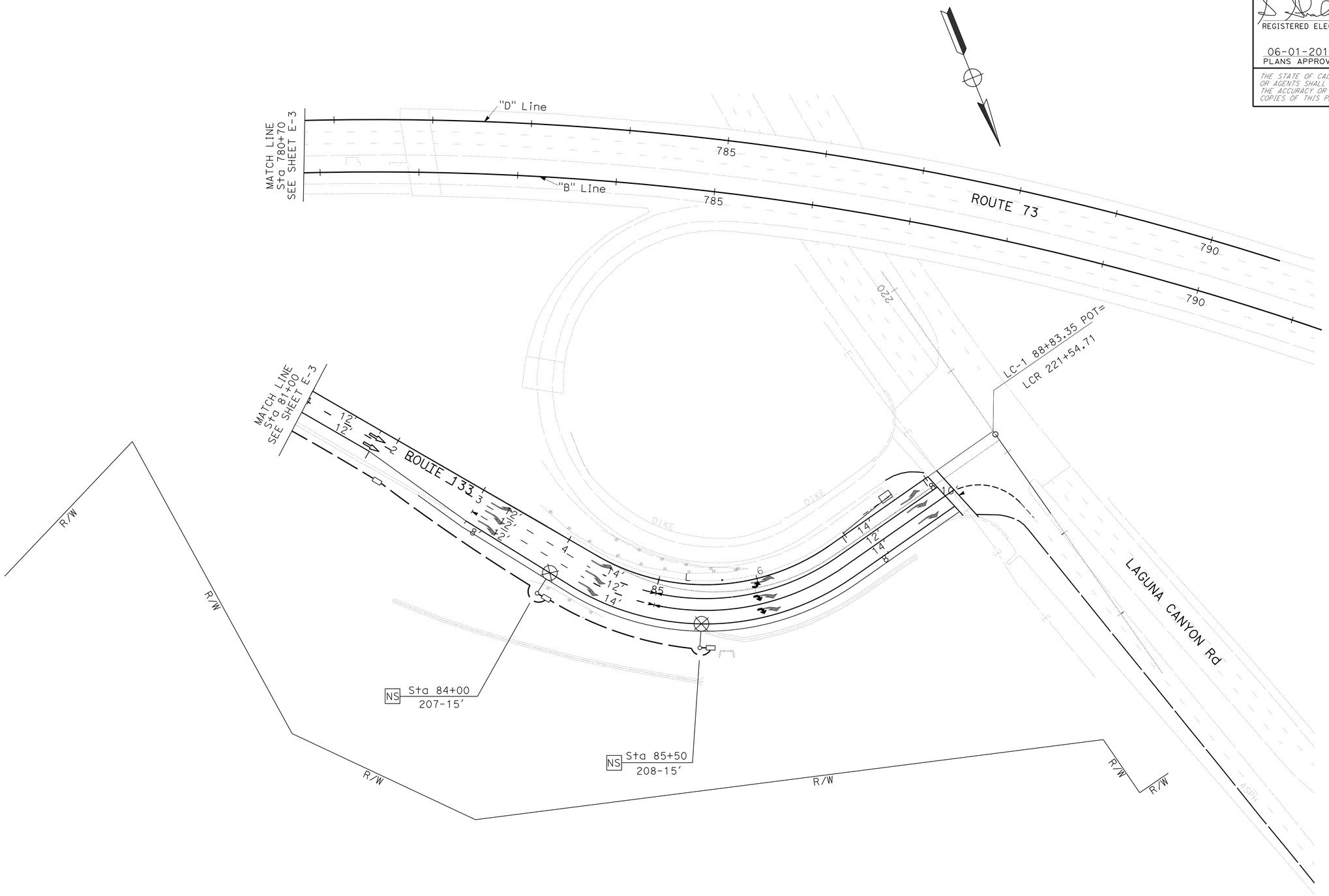

MODIFY LIGHTING AND SIGN ILLUMINATION

SCALE: 1" = 50'

SEE SHEET E-3 FOR NOTES ON THIS SHEET.

APPROVED FOR ELECTRICAL WORK ONLY

E-4

STATE OF CALIFORNIA - DEPARTMENT OF TRANSPORTATION
Caltrans®
ELECTRICAL DESIGN

FUNCTIONAL SUPERVISOR: SHAHRAM SHAHRIARI
CALCULATED-DESIGNED BY: ANTHONY C FERNANDEZ
CHECKED BY: VANESSA TRUONG
REVISED BY
DATE REVISED

LAST REVISION 05-21-15
DATE PLOTTED => 22-SEP-2015
TIME PLOTTED => 10:43

Dist	COUNTY	ROUTE	POST MILES TOTAL PROJECT	SHEET No.	TOTAL SHEETS
12	Ora	73,133	16.6,4.2	52	107

REGISTERED ELECTRICAL ENGINEER 05-26-2015 DATE

06-01-2015
PLANS APPROVAL DATE

REGISTERED PROFESSIONAL ENGINEER
S. SHAHRIARI
No. E 13485
Exp. 9/30/16
ELECTRICAL
STATE OF CALIFORNIA

THE STATE OF CALIFORNIA OR ITS OFFICERS OR AGENTS SHALL NOT BE RESPONSIBLE FOR THE ACCURACY OR COMPLETENESS OF SCANNED COPIES OF THIS PLAN SHEET.

LEGEND: (THIS SHEET)

- EXISTING LUMINAIRE TO RC.
- EXISTING LUMINAIRE TO REMAIN.
- NEW LED LUMINAIRE ROADWAY 2.
- EXISTING SIGN ILLUMINATION TO RC.
- EXISTING SIGN ILLUMINATION TO REMAIN.
- EXISTING #6 CONDUCTORS TO REMAIN.
- EXISTING CONDUCTORS TO BE REMOVED.
- NEW #6 CONDUCTOR.
- NEW SPLICE.
- EXISTING SPLICE.

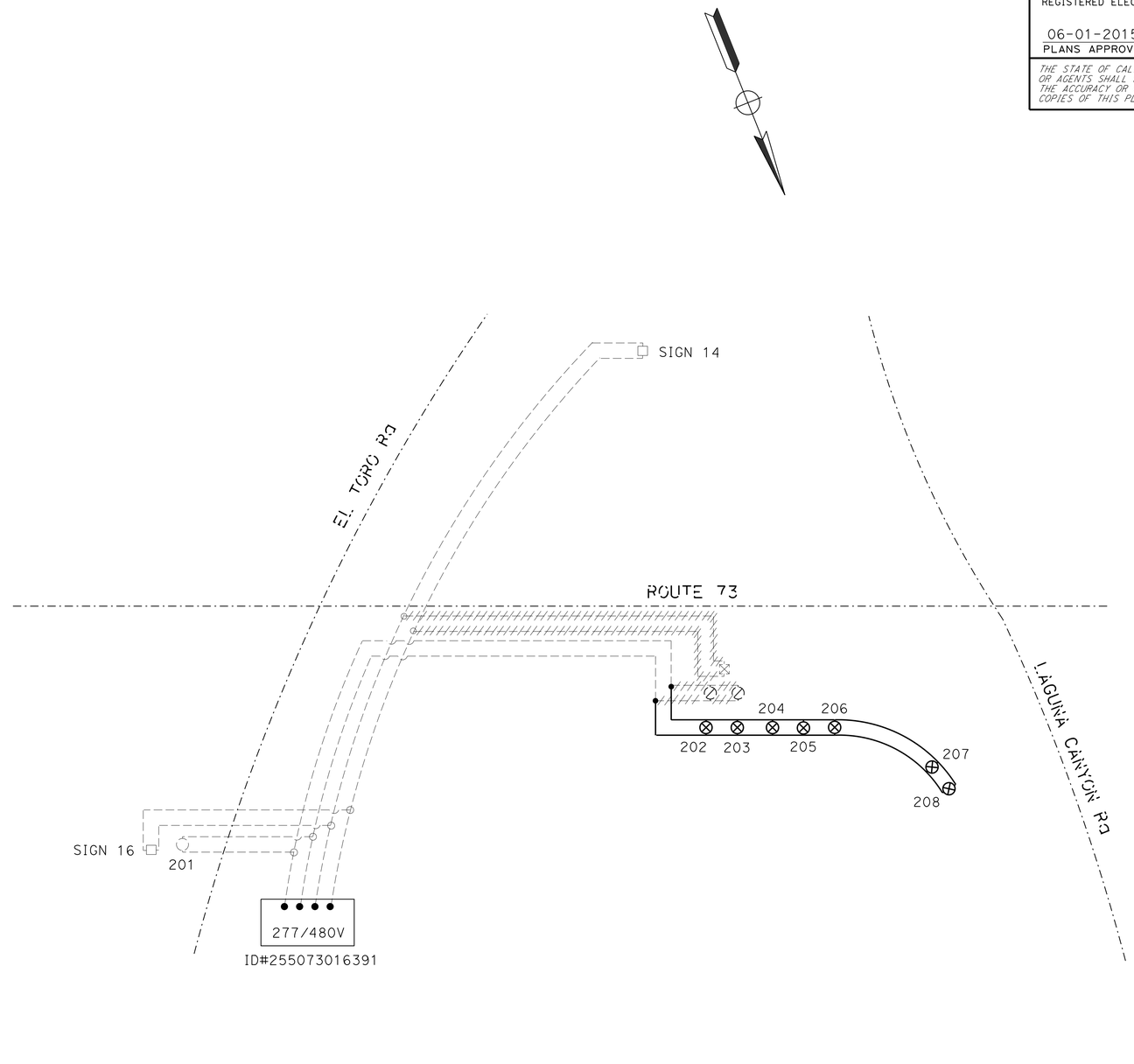

MODIFY LIGHTING AND SIGN ILLUMINATION
WIRING DIAGRAM
NO SCALE

E-5

STATE OF CALIFORNIA - DEPARTMENT OF TRANSPORTATION
Caltrans® ELECTRICAL DESIGN

FUNCTIONAL SUPERVISOR: SHAHRAM SHAHRIARI
CALCULATED-DESIGNED BY: ANTHONY C FERNANDEZ
CHECKED BY: VANESSA TRUONG
REVISED BY
DATE REVISED

LAST REVISION 05-21-15
DATE PLOTTED => 22-SEP-2015
TIME PLOTTED => 10:43

Dist	COUNTY	ROUTE	POST MILES TOTAL PROJECT	SHEET No.	TOTAL SHEETS
12	Ora	73,133	16.6,4.2	53	107

REGISTERED ELECTRICAL ENGINEER 05-26-2015 DATE

06-01-2015
PLANS APPROVAL DATE

REGISTERED PROFESSIONAL ENGINEER S. SHAHRIARI No. E 13485 Exp.9/30/16 ELECTRICAL STATE OF CALIFORNIA

THE STATE OF CALIFORNIA OR ITS OFFICERS OR AGENTS SHALL NOT BE RESPONSIBLE FOR THE ACCURACY OR COMPLETENESS OF SCANNED COPIES OF THIS PLAN SHEET.

NOTE: (THIS SHEET)

THE QUANTITIES SHOWN ON THIS SHEET ARE FOR DESIGNER USE ONLY, DO NOT USE FOR BIDDING PURPOSES.

MODIFY SIGNAL AND LIGHTING

SHEET No.	LOOP DETECTOR TYPE E	PEDESTRIAN SIGNAL MODULE	PEDESTRIAN SIGNAL HOUSING	PEDESTRIAN SIGNAL MOUNTING
	EA	EA	EA	EA
E-1	11	2	2	2

LIGHTING (TEMPORARY)

SHEET No.	TYPE H RISER	WOOD POLE	LMA 15'	LUMINAIRE ROADWAY 2
	EA	EA	EA	EA
E-2	1	2	2	2

MODIFY LIGHTING AND SIGN ILLUMINATION

SHEET No.	TYPE 30 STD	TYPE 31 STD	TYPE 32 STD	TYPE 30 STD FOUNDATION	TYPE 31 STD FOUNDATION	TYPE 32 STD FOUNDATION	LUMINAIRE ROADWAY 2	PB #5	2"C	AWG #6	RC TYPE 30 STD	RC LUMINAIRE	RC PB	RC MV
	EA	EA	EA	EA	EA	EA	EA	EA	FT	FT	EA	EA	EA	EA
E-3		3	2		3	2	5	7	1,200	3,000	2	2	3	3
E-4	2			2			2	3	800	2,000				

ELECTRICAL QUANTITIES

E-6

REVISED BY | DATE REVISED
ANTHONY C. FERNANDEZ | VANESSA TRUONG
CALCULATED-DESIGNED BY | CHECKED BY
FUNCTIONAL SUPERVISOR | SHAHRAM SHAHRIARI
STATE OF CALIFORNIA - DEPARTMENT OF TRANSPORTATION
Caltrans® ELECTRICAL DESIGN

LAST REVISION 05-15-15 | DATE PLOTTED => 22-SEP-2015 | TIME PLOTTED => 10:43

DIST	COUNTY	ROUTE	POST MILES TOTAL PROJECT	SHEET No	TOTAL SHEETS
12	Ora	73,133	16.6,4.2	54	107

REGISTERED CIVIL ENGINEER — DATE 5/20/15

06-01-15
PLANS APPROVAL DATE

The State of California or its officers or agents shall not be responsible for the accuracy or completeness of electronic copies of this plan sheet.

REGISTERED PROFESSIONAL ENGINEER — ALMAN MALAK — No. C73369 — Exp. 12-31-2016 — CIVIL — STATE OF CALIFORNIA

To get to the Caltrans web site, go to: http://www.dot.ca.gov

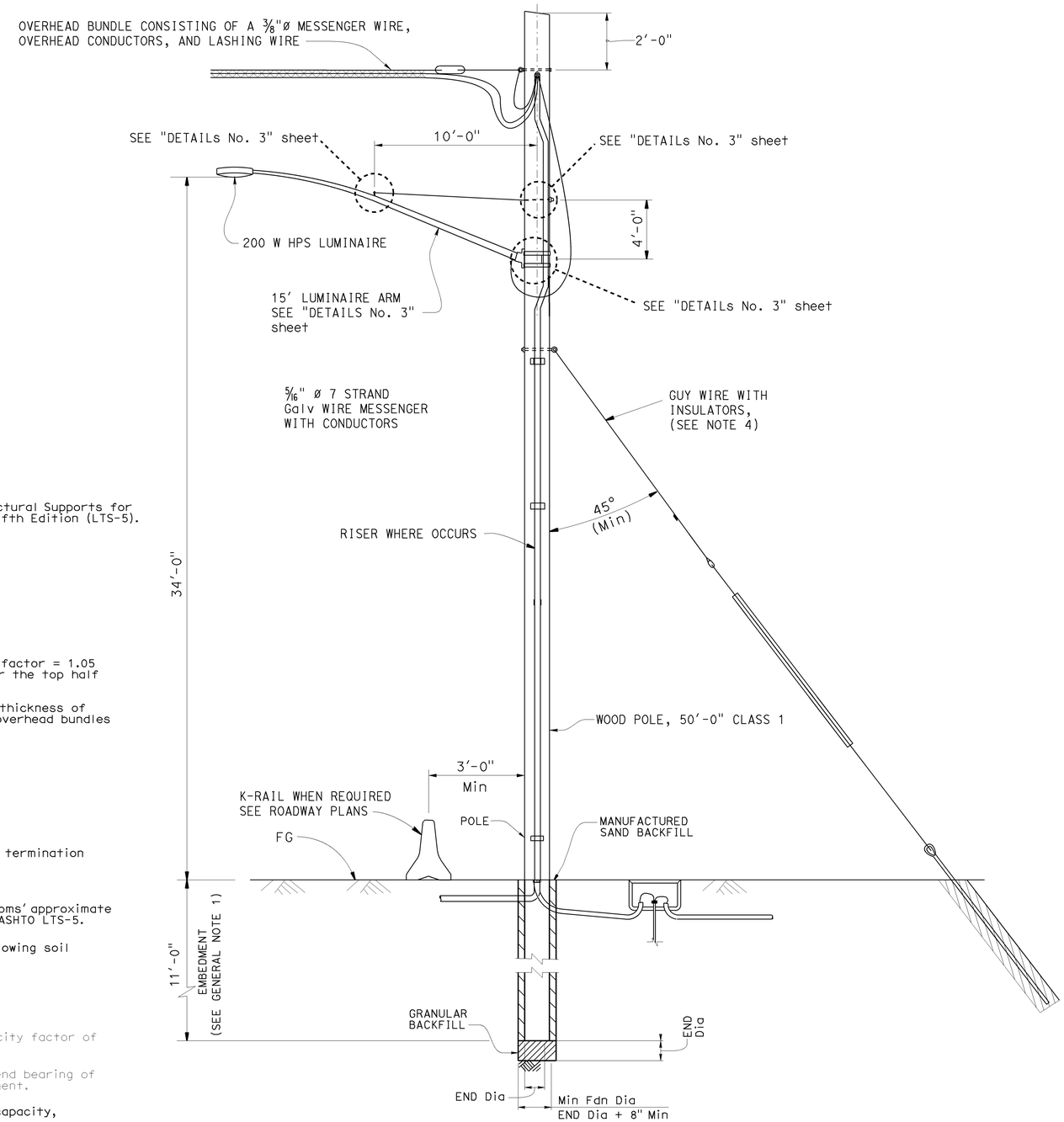

Design: AASHTO Standard Specifications for Structural Supports for Highway Signs, Luminaires and Traffic Signals, Fifth Edition (LTS-5).

GROUP LOAD COMBINATIONS:

I Dead Load
II Dead Load + Wind Load
III Dead Load + 0.5 (Wind Load) + Ice Load
IV Fatigue: Not used

LOADING:

Wind Loading: 85 mph (3-second gust)
Wind Recurrence Interval: 10 years
Combined height, exposure, and elevated terrain factor = 1.05
(Exposure C, structure is not located on or over the top half of a ridge, hill, or escarpment)

Ice Loading: 3.0 psf on surfaces, 0.60 in radial thickness of ice at a unit weight of 60 pcf on overhead bundles

BASIC DESIGN VALUES:

Timber Poles: Fb = 1850 psi
Fv = 110 psi
Fcp = 230 psi
Fc = 950 psi
E = 1500 x 10^3 psi

DESIGN WIRE BREAKING STRENGTHS:

ASTM A475, Utilities Grade, 7 strand modified by termination efficiency factor of 0.8

FOUNDATION DESIGN NOTES:

1. Pole embedment depth design is based on Broms' approximate procedure as described in Article 13.6 of AASHTO LTS-5.
2. Embedment depth is calculated based on following soil parameters,
   Cohesive Soil:
   Shear strength of soil c = 1500 psf.
   Cohesionless Soil:
   ø = 30 deg, γ = 120 pcf.
   Soil assumed to be unsaturated.
3. An overload factor of 2.0 and an undercapacity factor of 0.7 were used for safety factor of 2.86.
4. Allowable vertical bearing pressure at the end bearing of poles is 3000 psf at 6 feet or more embedment.
5. Guy wire anchor minimum allowable tension capacity, "Qa" = 8,900 lbs.

NOTE:
THE CONTRACTOR SHALL VERIFY ALL CONTROLLING FIELD DIMENSIONS BEFORE ORDERING OR FABRICATING ANY MATERIAL.

GENERAL NOTES:

1. Add 2'-0" for slopes above 1V:4H.
2. For a pole supporting multiple spans, calculate d_p for each span and use the largest value.
3. Do not exceed the attachments shown.
4. 1/2"ø guy wire with white-grey marker and strain insulator, (for annchorage, see "TEMPORARY WOOD POLES - DETAILS No. 2" sheet).

TYPICAL WOOD POLE SUPPORT WITH LUMINAIRE

NO SCALE

BRANCH CHIEF DAVID A. NEUMANN

	BY	CHECKED
DESIGN	N. KANEPATHIPILLAI	A MALAK
DETAILS	P C WELLS	A MALAK
QUANTITIES		

STATE OF CALIFORNIA
DEPARTMENT OF TRANSPORTATION

DIVISION OF ENGINEERING SERVICES
DESIGN AND TECHNICAL SERVICES
SPECIAL DESIGNS BRANCH B

BRIDGE NO. N/A
POST MILE 16.6/4.2

TEMPORARY WOOD POLES
GENERAL NOTES

SES-1

(ENGLISH) SPECIAL DESIGNS BRANCH BORDER SHEET (REV. 7-1-09)

ORIGINAL SCALE IN INCHES FOR REDUCED PLANS 0 1 2 3

UNIT: 3619
PROJECT NUMBER & PHASE: 1212000017-1
CONTRACT NO.: 12-0M3401

DISREGARD PRINTS BEARING EARLIER REVISION DATES
REVISION DATES 5-13-15

SHEET 1 OF 5

FILE => spec_des_br_prj/2015sd/12-0m3401/12-0m3401_ses-1.dgn

USERNAME => s136236 DATE PLOTTED => 29-MAY-2015 TIME PLOTTED => 11:11

DIST	COUNTY	ROUTE	POST MILES TOTAL PROJECT	SHEET No	TOTAL SHEETS
12	Ora	73,133	16.6,4.2	55	107

REGISTERED CIVIL ENGINEER — DATE 4/26/12

06-01-15
PLANS APPROVAL DATE

The State of California or its officers or agents shall not be responsible for the accuracy or completeness of electronic copies of this plan sheet.

REGISTERED PROFESSIONAL ENGINEER — AIMAN MALAK — No. C73369 — Exp. 12-31-2016 — CIVIL — STATE OF CALIFORNIA

To get to the Caltrans web site, go to: http://www.dot.ca.gov

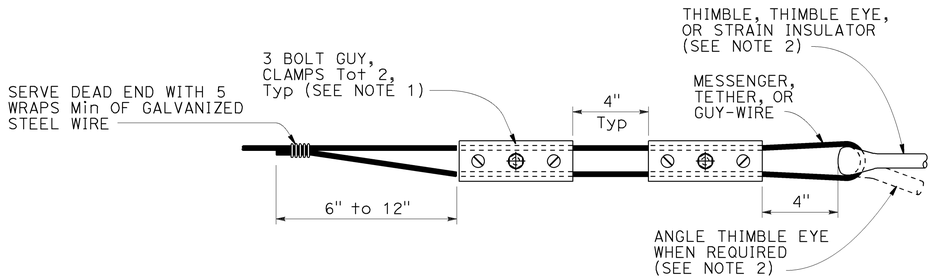

ALTERNATIVE TERMINATION OF MESSENGER WIRES USING GUY CLAMPS

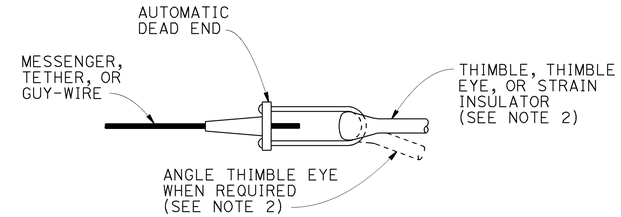

TERMINATION OF WIRES USING AUTOMATIC DEAD END

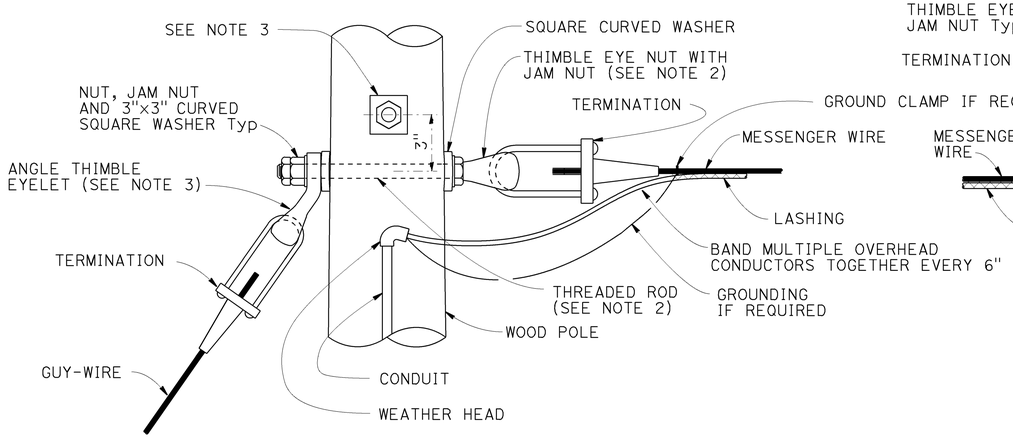

POLE AT DEAD END WITH GUY-WIRE CONNECTION

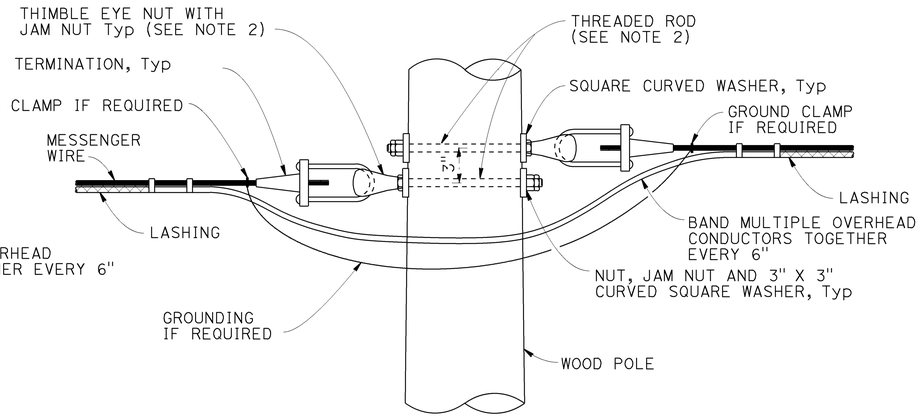

POLE AT TANGENT OR CORNER CONNECTION

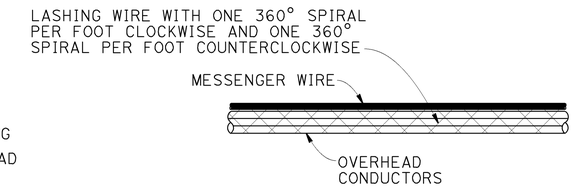

DOUBLE LASHING DETAIL

USE IF d_p IS GREATER THAN 1½"

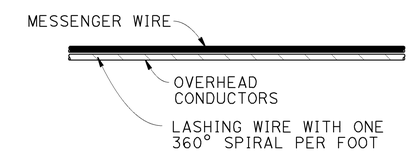

TYPICAL LASHING DETAIL

USE IF d_p IS 1½" OR LESS

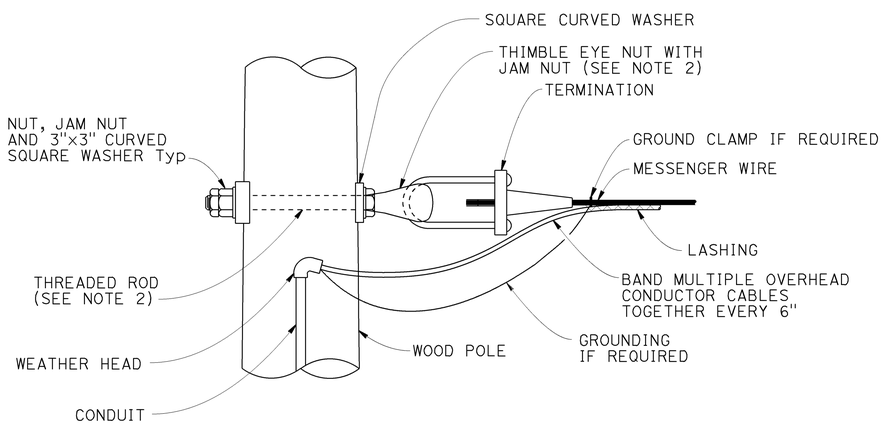

POLE AT DEAD END CONNECTION

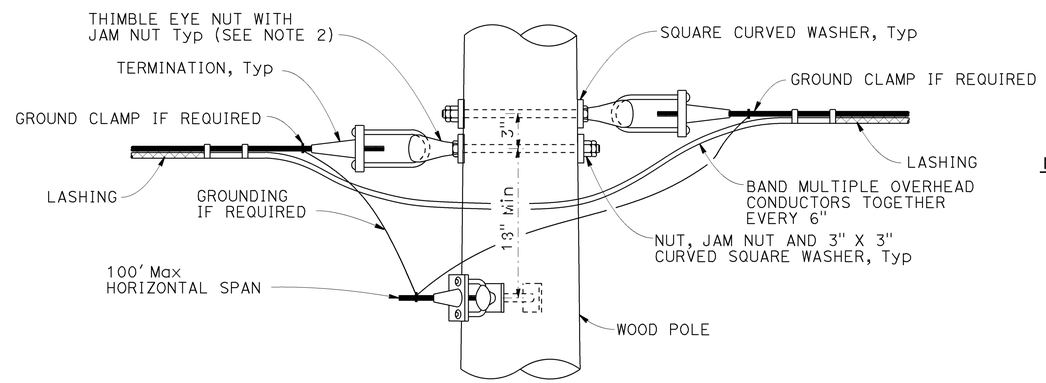

POLE AT JUNCTION CONNECTION

NOTES:

1. For guy wires use 3 clamps.
2. Use ⅝" ø except ¾" ø at guyed wires
3. Install additional angle thimble eyelet at poles with two guy wires.

NO SCALE

BRANCH CHIEF DAVID A. NEUMANN	DESIGN	BY N. KANEPATHIPILLAI	CHECKED A MALAK
	DETAILS	BY P C WELLS	CHECKED A MALAK
	QUANTITIES	BY	CHECKED

STATE OF CALIFORNIA
DEPARTMENT OF TRANSPORTATION

DIVISION OF ENGINEERING SERVICES
DESIGN AND TECHNICAL SERVICES
SPECIAL DESIGNS BRANCH

B

BRIDGE NO. N/A
POST MILE 16.6/4.2

TEMPORARY WOOD POLES
DETAILS No. 1

SES-2

(ENGLISH) SPECIAL DESIGNS BRANCH BORDER SHEET (REV. 7-1-09)

ORIGINAL SCALE IN INCHES FOR REDUCED PLANS 0 1 2 3

UNIT: 3619
PROJECT NUMBER & PHASE: 1212000017-1
CONTRACT NO.: 12-0M3401

DISREGARD PRINTS BEARING EARLIER REVISION DATES 5-13-15

REVISION DATES

SHEET 2 OF 5

FILE => spec_des_br_prj/2015sd/12-0m3401/12-0m3401_ses-2.dgn

USERNAME => s136236 DATE PLOTTED => 29-MAY-2015 TIME PLOTTED => 11:37

DIST	COUNTY	ROUTE	POST MILES TOTAL PROJECT	SHEET No	TOTAL SHEETS
12	Ora	73,133	16.6,4.2	56	107

REGISTERED CIVIL ENGINEER 4/26/12 DATE

06-01-15
PLANS APPROVAL DATE

REGISTERED PROFESSIONAL ENGINEER ATIMAN MALAK No. C73369 Exp. 12-31-2016 CIVIL STATE OF CALIFORNIA

The State of California or its officers or agents shall not be responsible for the accuracy or completeness of electronic copies of this plan sheet.

To get to the Caltrans web site, go to: http://www.dot.ca.gov

NOTE:

1. For minimum allowable tension capacity of anchors see "Temporary Wood Poles - General Notes" sheet.

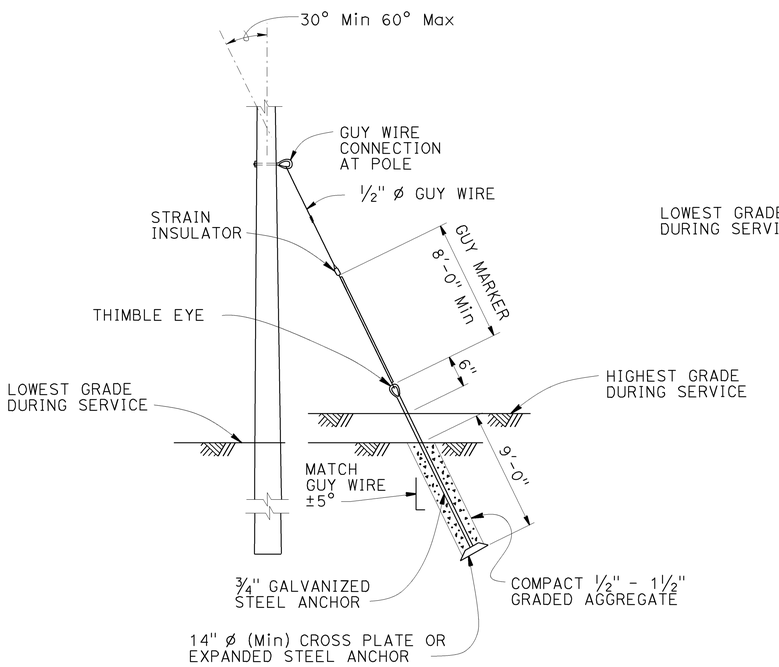

NOTE:

Helical anchor detail may be used in place of expanded steel anchors.

EXPANDED STEEL ANCHOR DETAIL

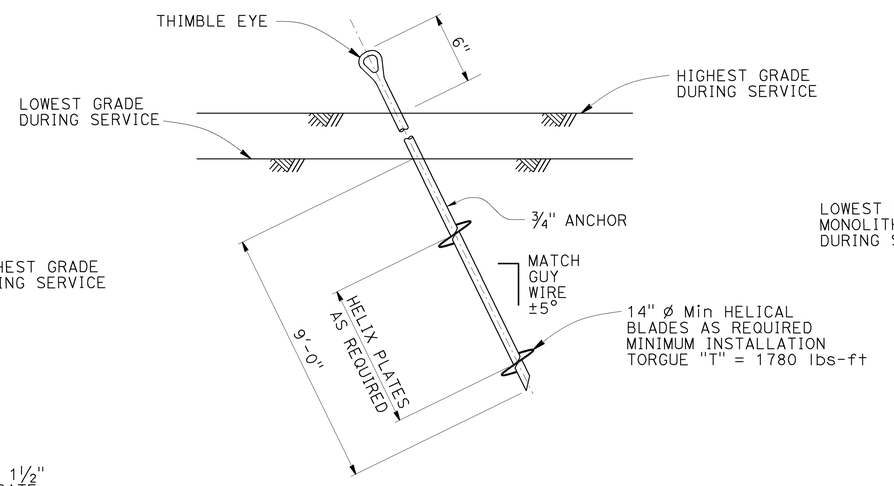

HELICAL ANCHOR DETAIL

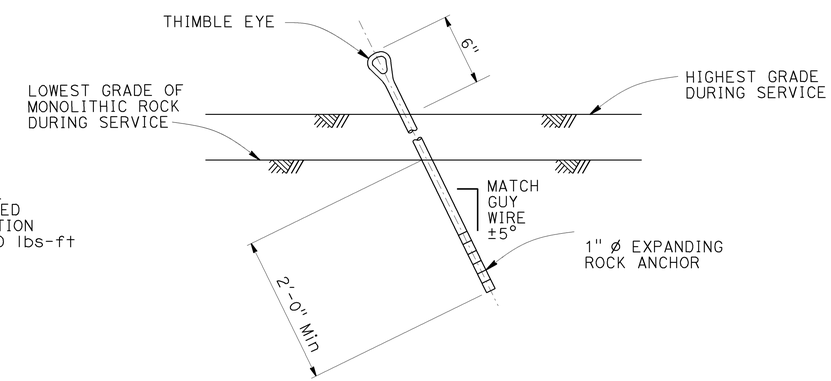

EXPANDING ROCK ANCHOR DETAIL

BRANCH CHIEF DAVID A. NEUMANN	DESIGN	BY N. KANEPATHIPILLAI	CHECKED A MALAK
	DETAILS	BY P C WELLS	CHECKED A MALAK
	QUANTITIES	BY	CHECKED

STATE OF CALIFORNIA DEPARTMENT OF TRANSPORTATION

DIVISION OF ENGINEERING SERVICES DESIGN AND TECHNICAL SERVICES SPECIAL DESIGNS BRANCH B

BRIDGE NO. N/A
POST MILE 16.6/4.2

TEMPORARY WOOD POLES
DETAILS No. 2

SES-3

(ENGLISH) SPECIAL DESIGNS BRANCH BORDER SHEET (REV. 7-1-09)

ORIGINAL SCALE IN INCHES FOR REDUCED PLANS 0 1 2 3

UNIT: 3619
PROJECT NUMBER & PHASE: 1212000017-1
CONTRACT NO.: 12-0M3401

DISREGARD PRINTS BEARING EARLIER REVISION DATES → 5-13-15

REVISION DATES

SHEET 3 OF 5

FILE => spec_des_br_prj/2015sd/12-0m3401/12-0m3401_ses-3.dgn

USERNAME => s136236 DATE PLOTTED => 29-MAY-2015 TIME PLOTTED => 11:39

DIST	COUNTY	ROUTE	POST MILES TOTAL PROJECT	SHEET No	TOTAL SHEETS
12	Ora	73,133	16.6,4.2	57	107

REGISTERED CIVIL ENGINEER — DATE 4/26/12

06-01-15
PLANS APPROVAL DATE

REGISTERED PROFESSIONAL ENGINEER — AIMAN MALAK — No. C73369 — Exp. 12-31-2016 — CIVIL — STATE OF CALIFORNIA

The State of California or its officers or agents shall not be responsible for the accuracy or completeness of electronic copies of this plan sheet.

To get to the Caltrans web site, go to: http://www.dot.ca.gov

NOTES:

1. Luminaire mast arms must be in compliance with Standard Plan ES-6E with noted modifications.
2. Verify pole dimensions at tie-rod attachment height. Fabricate 8" flat bar with "L" Dimension to maintain an open gap between flanges in finished installation.
3. Not all screw heads and bolt heads are shown for clarity.
4. Mast arm not shown for clarity.

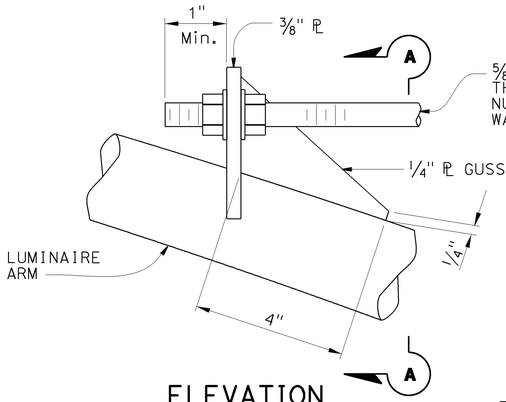

ELEVATION

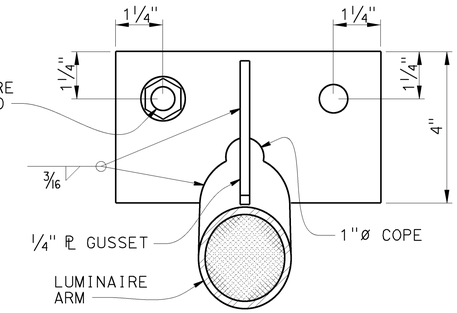

SECTION A-A

DETAIL A
TIE-ROD AT LUMINAIRE ARM
NO SCALE

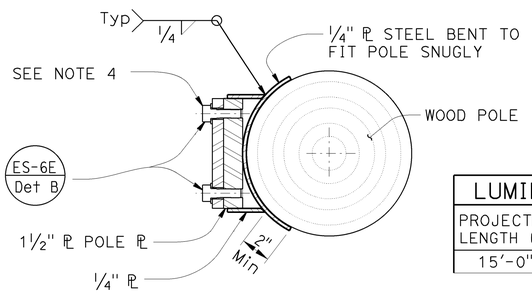

SECTION E-E

LUMINAIRE MAST ARM DATA			
PROJECTED LENGTH (L)	N RISE	Min OD AT POLE	NOMINAL THICKNESS
15'-0"	4'9"	4 1/4"	0.1196"

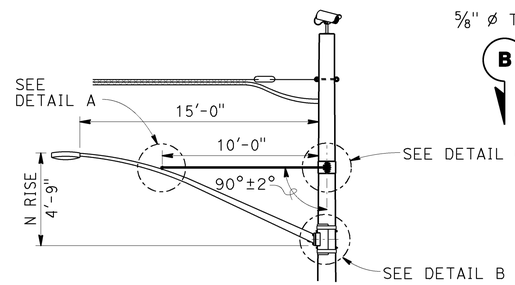

LUMINAIRE MAST ARM

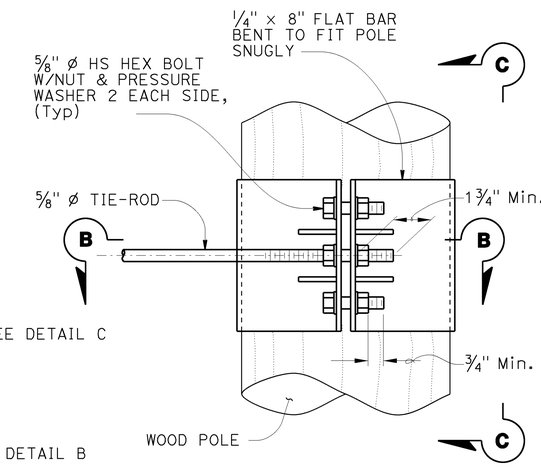

ELEVATION

NOTE:
Not all screw and bolt heads shown for clarity.

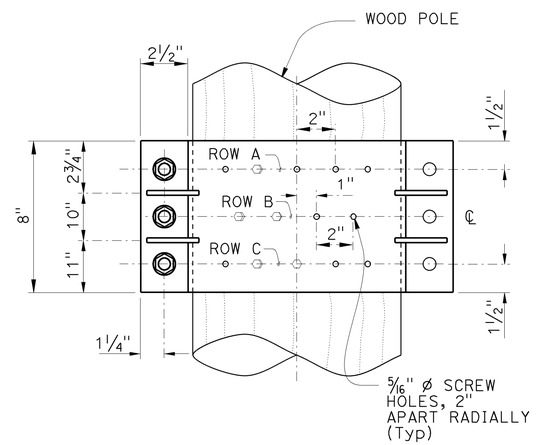

VIEW C-C

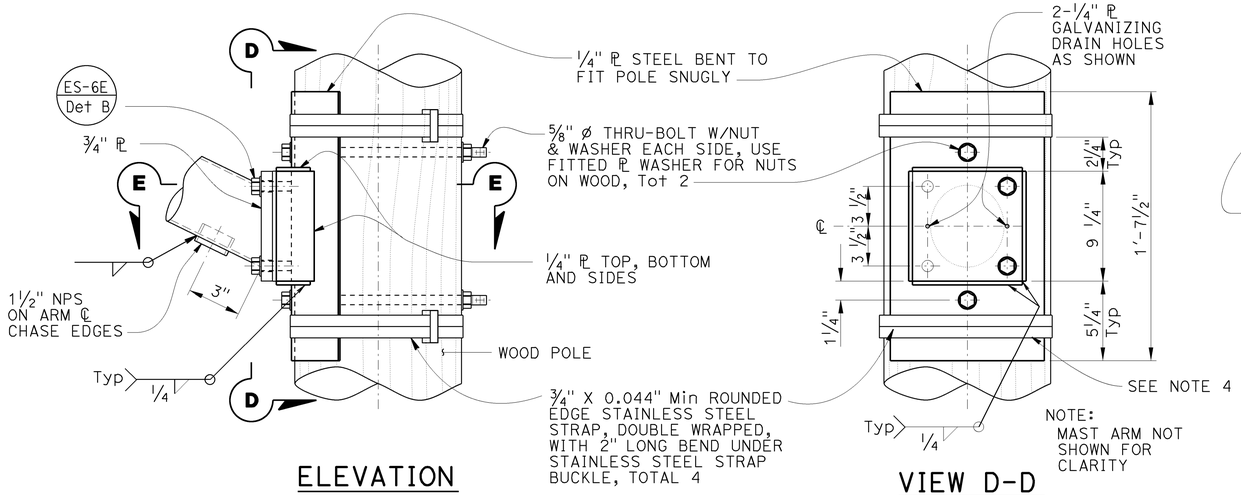

ELEVATION

VIEW D-D

DETAIL B
ARM CONNECTION DETAILS
NO SCALE

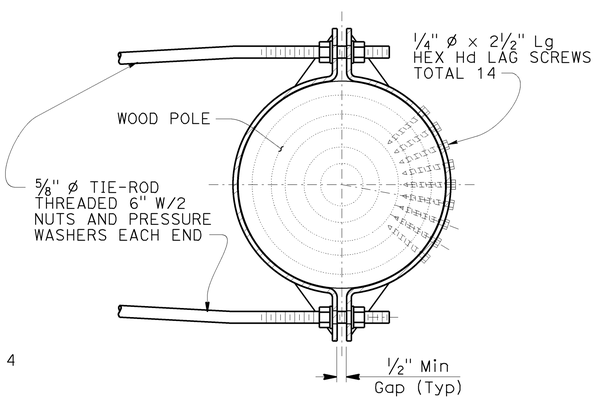

SECTION B-B

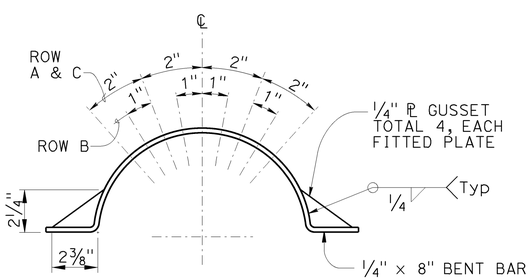

LAG SCREW AND
GUSSET PLATE LAYOUT

DETAIL C
TIE-ROD AT POLE
NO SCALE

BRANCH CHIEF	DAVID A. NEUMANN		
DESIGN	BY N. KANEPATHIPILLAI	CHECKED A MALAK	
DETAILS	BY P C WELLS	CHECKED A MALAK	
QUANTITIES	BY	CHECKED	

STATE OF CALIFORNIA
DEPARTMENT OF TRANSPORTATION

DIVISION OF ENGINEERING SERVICES
DESIGN AND TECHNICAL SERVICES
SPECIAL DESIGNS BRANCH B

BRIDGE NO. N/A
POST MILE 16.6/4.2

TEMPORARY WOOD POLES
DETAILS No. 3

SES-4

(ENGLISH) SPECIAL DESIGNS BRANCH BORDER SHEET (REV. 7-1-09)

ORIGINAL SCALE IN INCHES FOR REDUCED PLANS 0 1 2 3

UNIT: 3619
PROJECT NUMBER & PHASE: 1212000017-1
CONTRACT NO.: 12-0M3401

DISREGARD PRINTS BEARING EARLIER REVISION DATES
REVISION DATES 5-13-15

SHEET 4 OF 5

FILE => spec_des_br_prj/2015sd/12-0m3401/12-0m3401_ses-4.dgn

USERNAME => s136236 DATE PLOTTED => 29-MAY-2015 TIME PLOTTED => 11:40

DIST	COUNTY	ROUTE	POST MILES TOTAL PROJECT	SHEET No	TOTAL SHEETS
12	Ora	73,133	16.6,4.2	58	107

REGISTERED CIVIL ENGINEER 4/26/12 DATE

06-01-15
PLANS APPROVAL DATE

REGISTERED PROFESSIONAL ENGINEER ATMAN MALAK No. C73369 Exp. 12-31-2016 CIVIL STATE OF CALIFORNIA

The State of California or its officers or agents shall not be responsible for the accuracy or completeness of electronic copies of this plan sheet.

To get to the Caltrans web site, go to: http://www.dot.ca.gov

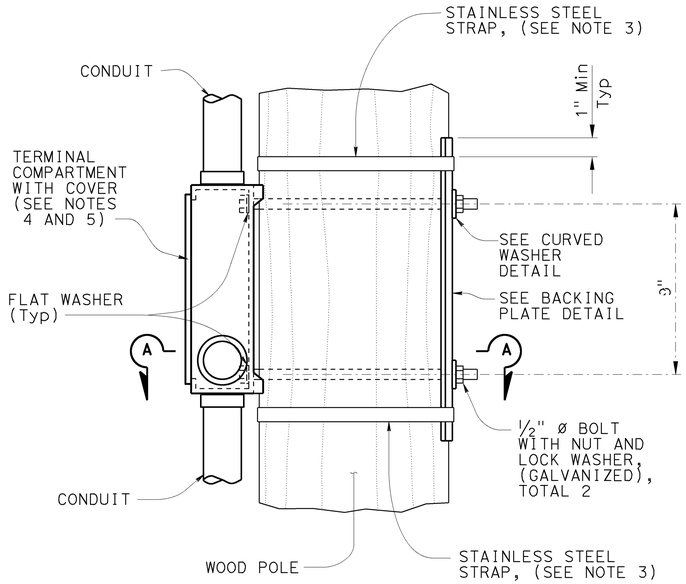

ELEVATION

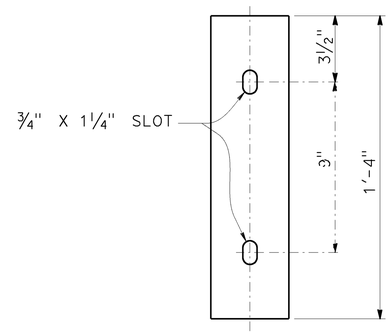

ELEVATION

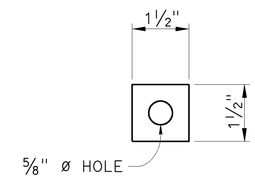

ELEVATION

PLAN

BACKING PLATE DETAIL

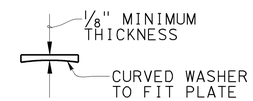

PLAN

CURVED WASHER DETAIL

NOTES:

1. Verify pole dimensions at terminal compartment for fabrication of backing plate and curved washer.
2. Backing plate to be galvanized after fabrication.
3. ¾" x 0.044" minimum, rounded edge stainless steel straps, double wrapped with 2" long bend under stainless steel strap buckle.
4. For miscellaneous details for signal mounting not shown see Standard Plan ES-4D.
5. If the terminal compartment has a cable entry guide on the rear face, remove the cable entry guide to a level that will not interfere with the wood post. Close any unused cable entry locations with raintight cap.

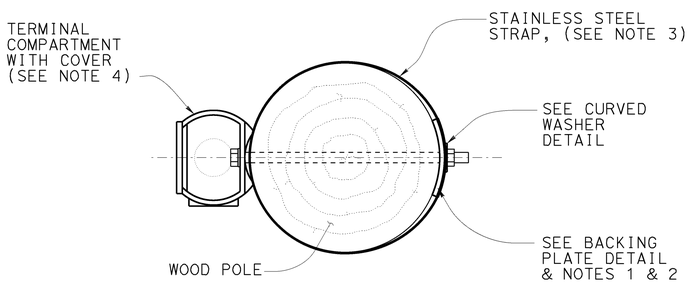

SECTION A-A

SIDE MOUNTING TERMINAL COMPARTMENT

NO SCALE

BRANCH CHIEF DAVID A. NEUMANN

	BY	CHECKED
DESIGN	N. KANEPATHIPILLAI	A MALAK
DETAILS	P C WELLS	A MALAK
QUANTITIES		

STATE OF CALIFORNIA DEPARTMENT OF TRANSPORTATION

DIVISION OF ENGINEERING SERVICES DESIGN AND TECHNICAL SERVICES SPECIAL DESIGNS BRANCH B

BRIDGE NO. N/A
POST MILE 16.6/4.2

TEMPORARY WOOD POLES
DETAILS No. 4

SES-5

(ENGLISH) SPECIAL DESIGNS BRANCH BORDER SHEET (REV. 7-1-09)

ORIGINAL SCALE IN INCHES FOR REDUCED PLANS 0 1 2 3

UNIT: 3619
PROJECT NUMBER & PHASE: 1212000017-1
CONTRACT NO.: 12-0M3401

DISREGARD PRINTS BEARING EARLIER REVISION DATES

REVISION DATES 5-13-15

SHEET 5 OF 5

FILE => spec_des_br_prj/2015sd/12-0m3401/12-0m3401_ses-5.dgn

USERNAME => s136236 DATE PLOTTED => 29-MAY-2015 TIME PLOTTED => 11:41

M

Maint	MAINTENANCE
Max	MAXIMUM
MB	METAL BEAM
MBB	METAL BEAM BARRIER
MBGR	METAL BEAM GUARD RAILING
Med	MEDIAN
MGS	MIDWEST GUARDRAIL SYSTEM
MH	MANHOLE
Min	MINIMUM
Misc	MISCELLANEOUS
Misc I & S	MISCELLANEOUS IRON AND STEEL
Mkr	MARKER
Mod	MODIFIED,
	MODIFY
Mon	MONUMENT
MP	METAL PLATE
MPGR	METAL PLATE GUARD RAILING
MR	MOVEMENT RATING
MSE	MECHANICALLY STABILIZED EMBANKMENT
Mt	MOUNTAIN, MOUNT
Mtl	MATERIAL
MVP	MAINTENANCE VEHICLE PULLOUT

N

N	NORTH
NB	NORTHBOUND
No.	NUMBER (MUST HAVE PERIOD)
Nos.	NUMBERS (MUST HAVE PERIOD)
NPS	NOMINAL PIPE SIZE
NS	NEAR SIDE
NSP	NEW STANDARD PLAN
NTS	NOT TO SCALE

O

Oblr	OBLITERATE
OC	OVERCROSSING
OD	OUTSIDE DIAMETER
OF	OUTSIDE FACE
OG	ORIGINAL GROUND
OGAC	OPEN GRADED ASPHALT CONCRETE
OGFC	OPEN GRADED FRICTION COURSE
OH	OVERHEAD
OHWM	ORDINARY HIGH WATER MARK
O-O	OUT TO OUT
Opp	OPPOSITE
OSD	OVERSIDE DRAIN

P

P	PAGE
PAP	PERFORATED ALUMINUM PIPE
PB	PULL BOX
PC	POINT OF CURVATURE,
	PRECAST
PCC	POINT OF COMPOUND CURVE,
	PORTLAND CEMENT CONCRETE
PCMS	PORTABLE CHANGEABLE MESSAGE SIGN
PCP	PERFORATED CONCRETE PIPE,
	PRESTRESSED CONCRETE PIPE
PCVC	POINT OF COMPOUND VERTICAL CURVE
PEC	PERMIT TO ENTER AND CONSTRUCT
Ped	PEDESTRIAN
Ped OC	PEDESTRIAN OVERCROSSING
Ped UC	PEDESTRIAN UNDERCROSSING
Perm Mtl	PERMEABLE MATERIAL

P continued

PG	PROFILE GRADE
PI	POINT OF INTERSECTION
PJP	PARTIAL JOINT PENETRATION
Pkwy	PARKWAY
ℙ,PL	PLATE
P/L	PROPERTY LINE
PM	POST MILE,
	TIME FROM NOON TO MIDNIGHT
PN	PAVING NOTCH
POC	POINT OF HORIZONTAL CURVE
POT	POINT OF TANGENT
POVC	POINT OF VERTICAL CURVE
PP	PIPE PILE,
	PLASTIC PIPE,
	POWER POLE
PPL	PREFORMED PERMEABLE LINER
PPP	PERFORATED PLASTIC PIPE
PRC	POINT OF REVERSE CURVE
PRF	PAVEMENT REINFORCING FABRIC
PRVC	POINT OF REVERSE VERTICAL CURVE
PS&E	PLANS, SPECIFICATIONS AND ESTIMATES
PS, P/S	PRESTRESSED
PSP	PERFORATED STEEL PIPE
PT	POINT OF TANGENCY
PVC	POLYVINYL CHLORIDE
Pvmt	PAVEMENT

Q

Qty	QUANTITY

R

R	RADIUS
R & D	REMOVE AND DISPOSE
R & S	REMOVE AND SALVAGE
R/C	RATE OF CHANGE
RCA	REINFORCED CONCRETE ARCH
RCB	REINFORCED CONCRETE BOX
RCP	REINFORCED CONCRETE PIPE
RCPA	REINFORCED CONCRETE PIPE ARCH
Rd	ROAD
Reinf	REINFORCED,
	REINFORCEMENT,
	REINFORCING
Rel	RELOCATE
Repl	REPLACEMENT
Ret	RETAINING
Rev	REVISED, REVISION
Rdwy	ROADWAY
RHMA	RUBBERIZED HOT MIX ASPHALT
Riv	RIVER
RM	ROAD-MIXED
RP	RADIUS POINT,
	REFERENCE POINT
RR	RAILROAD
RSP	ROCK SLOPE PROTECTION,
	REVISED STANDARD PLAN
Rt	RIGHT
Rte	ROUTE
RW	REDWOOD,
	RETAINING WALL
R/W	RIGHT OF WAY
Rwy	RAILWAY

S

S	SOUTH,
	SUPPLEMENT
SAE	STRUCTURE APPROACH EMBANKMENT
Salv	SALVAGE
SAPP	STRUCTURAL ALUMINUM PLATE PIPE
SB	SOUTHBOUND
SC	SAND CUSHION
SCSP	SLOTTED CORRUGATED STEEL PIPE
SD	STORM DRAIN
Sec	SECOND,
	SECTION
Sep	SEPARATION
SG	SUBGRADE
Shld	SHOULDER
Sht	SHEET
Sim	SIMILAR
℄	STATION LINE
SM	SELECTED MATERIAL
Spec	SPECIAL,
	SPECIFICATIONS
SPP	SLOTTED PLASTIC PIPE
SS	SLOPE STAKE
SSBM	STRAP AND SADDLE BRACKET METHOD
SSD	STRUCTURAL SECTION DRAIN
SSPA	STRUCTURAL STEEL PLATE ARCH
SSPP	STRUCTURAL STEEL PLATE PIPE
SSPPA	STRUCTURAL STEEL PLATE PIPE ARCH
SSRP	STEEL SPIRAL RIB PIPE
St	STREET
Sta	STATION
STBB	SINGLE THRIE BEAM BARRIER
Std	STANDARD
Str	STRUCTURE
Surf	SURFACING
SW	SIDEWALK,
	SOUND WALL
Swr	SEWER
Sym	SYMMETRICAL
S4S	SURFACE 4 SIDES

T

T	SEMI-TANGENT
Tan	TANGENT
TBB	THRIE BEAM BARRIER
Tbr	TIMBER
TC	TOP OF CURB
TCB	TRAFFIC CONTROL BOX
TCE	TEMPORARY CONSTRUCTION EASEMENT
Tel	TELEPHONE
Temp	TEMPORARY
TG	TOP OF GRADE
Tot	TOTAL
TP	TELEPHONE POLE
TPB	TREATED PERMEABLE BASE
TPM	TREATED PERMEABLE MATERIAL
Trans	TRANSITION

T continued

TS	TRANSVERSE,
	TRAFFIC SIGNAL,
	TUBULAR STEEL
Typ	TYPICAL

U

UC	UNDERCROSSING
UD	UNDERDRAIN
UG	UNDERGROUND
UON	UNLESS OTHERWISE NOTED
UP	UNDERPASS

V

V	VALVE,
	DESIGN SPEED
Var	VARIABLE,
	VARIES
VC	VERTICAL CURVE
VCP	VITRIFIED CLAY PIPE
Vert	VERTICAL
Via	VIADUCT
Vol	VOLUME

W

W	WEST,
	WIDTH
WB	WESTBOUND
WH	WEEP HOLE
WM	WIRE MESH
WS	WATER SURFACE
WSP	WELDED STEEL PIPE
Wt	WEIGHT
WV	WATER VALVE
WW	WINGWALL
WWLOL	WINGWALL LAYOUT LINE

X

X Sec	CROSS SECTION
Xing	CROSSING

Y

Yr	YEAR
Yrs	YEARS

Dist	COUNTY	ROUTE	POST MILES TOTAL PROJECT	SHEET No.	TOTAL SHEETS
12	Ora	73,133	16.6,4.2	59	107

Grace M. Tsushima
REGISTERED CIVIL ENGINEER

July 19, 2013
PLANS APPROVAL DATE

REGISTERED PROFESSIONAL ENGINEER
Grace M. Tsushima
No. C49814
Exp. 9-30-14
CIVIL
STATE OF CALIFORNIA

THE STATE OF CALIFORNIA OR ITS OFFICERS OR AGENTS SHALL NOT BE RESPONSIBLE FOR THE ACCURACY OR COMPLETENESS OF SCANNED COPIES OF THIS PLAN SHEET.

TO ACCOMPANY PLANS DATED 06-01-15

UNIT OF MEASUREMENT SYMBOLS:

Some of the symbols used in the project plan quantity tables and in the Bid Item List are:

TABLE A

SYMBOL USED	DEFINITIONS
ACRE	ACRE
CF	CUBIC FOOT
CY	CUBIC YARD
EA	EACH
GAL	GALLON
LB	POUND
LF	LINEAR FOOT
SQFT	SQUARE FOOT
SQYD	SQUARE YARD
STA	100 FEET
TAB	TABLET
TON	2,000 POUNDS

Some of the symbols used in the plans other than in the project plan quantity tables are:

TABLE B

SYMBOL USED	DEFINITIONS
ksi	KIPS PER SQUARE INCH
ksf	KIPS PER SQUARE FOOT
psi	POUNDS PER SQUARE INCH
psf	POUNDS PER SQUARE FOOT
lb/ft^3, pcf	POUNDS PER CUBIC FOOT
tsf	TONS PER SQUARE FOOT
mph, MPH *	MILES PER HOUR
ø	NOMINAL DIAMETER
oz	OUNCE
lb	POUND
kip	1,000 POUNDS
cal	CALORIE
ft	FOOT OR FEET
gal	GALLON

* For use on a sign panel only

STATE OF CALIFORNIA
DEPARTMENT OF TRANSPORTATION

ABBREVIATIONS (SHEET 2 OF 2)

NO SCALE

RSP A10B DATED JULY 19, 2013 SUPERSEDES STANDARD PLAN A10B DATED MAY 20, 2011 - PAGE 2 OF THE STANDARD PLANS BOOK DATED 2010.

REVISED STANDARD PLAN RSP A10B

2010 REVISED STANDARD PLAN RSP A10B

6-7-13

Dist	COUNTY	ROUTE	POST MILES TOTAL PROJECT	SHEET No.	TOTAL SHEETS
12	Ora	73,133	16.6,4.2	60	107

Roberta L. McLaughlin
REGISTERED CIVIL ENGINEER

July 19, 2013
PLANS APPROVAL DATE

REGISTERED PROFESSIONAL ENGINEER
Roberta L. McLaughlin
No. C40375
Exp. 3-31-15
CIVIL
STATE OF CALIFORNIA

THE STATE OF CALIFORNIA OR ITS OFFICERS OR AGENTS SHALL NOT BE RESPONSIBLE FOR THE ACCURACY OR COMPLETENESS OF SCANNED COPIES OF THIS PLAN SHEET.

TO ACCOMPANY PLANS DATED 06-01-15

EXIT RAMP NEUTRAL AREA (GORE) TREATMENT

DETAIL 36

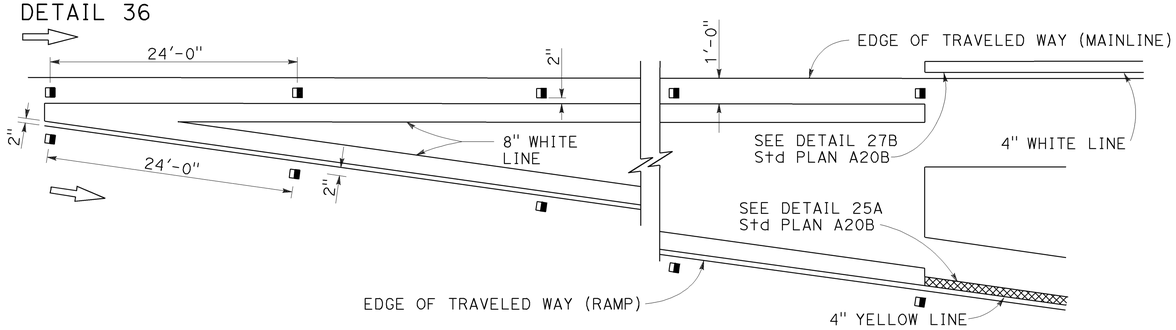

ENTRANCE RAMP NEUTRAL AREA (MERGE) TREATMENT

DETAIL 36A

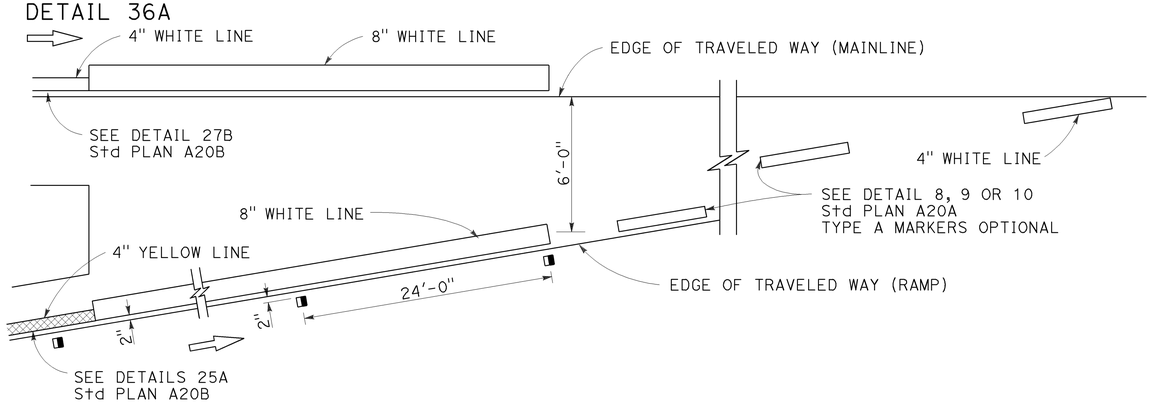

ENTRANCE RAMP NEUTRAL AREA (ACCELERATION LANE) TREATMENT

DETAIL 36B

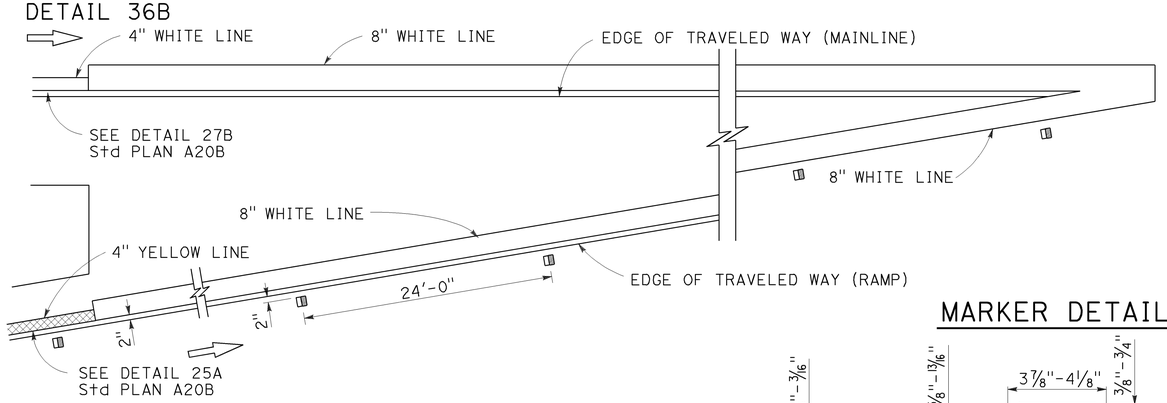

MARKER DETAILS

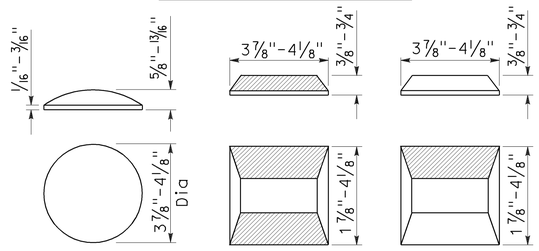

RETROREFLECTIVE FACE

LEGEND:

MARKERS

- ○ TYPE A WHITE NON-REFLECTIVE
- ⊟ TYPE C RED-CLEAR RETROREFLECTIVE
- ◨ TYPE G ONE-WAY CLEAR RETROREFLECTIVE

LANE DROP AT EXIT RAMPS

DETAIL 37

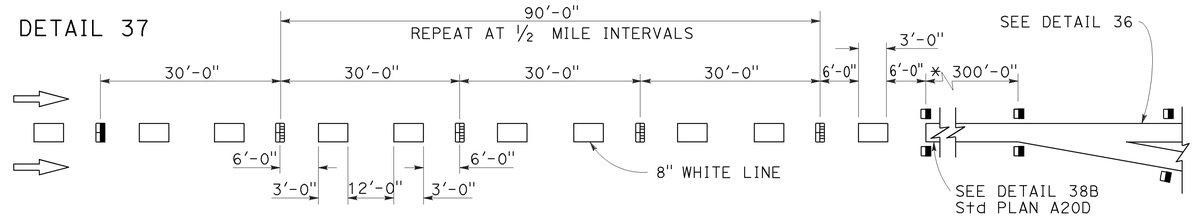

DETAIL 37A

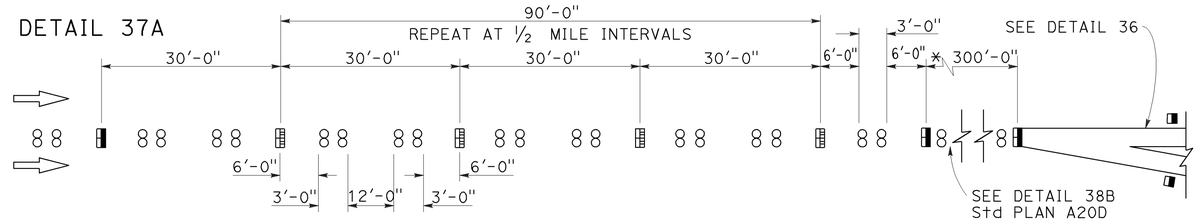

* The solid channelizing line shown may be omitted on short auxiliary lanes where weaving length is critical.

LANE DROP AT INTERSECTIONS

DETAIL 37B

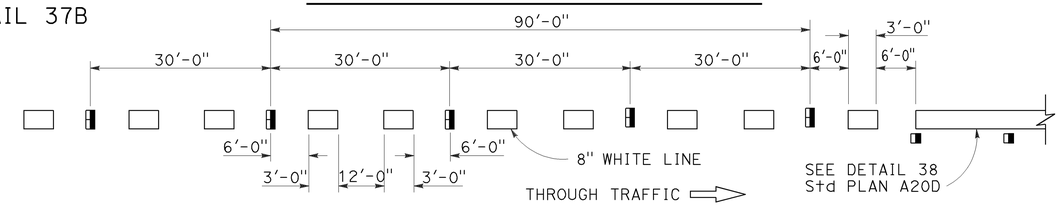

DETAIL 37C

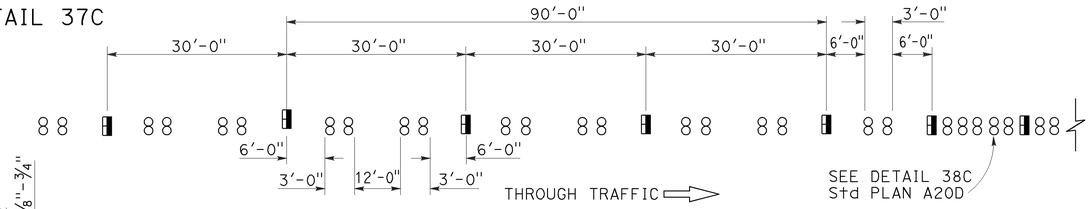

STATE OF CALIFORNIA
DEPARTMENT OF TRANSPORTATION

PAVEMENT MARKERS AND TRAFFIC LINE TYPICAL DETAILS

NO SCALE

RSP A20C DATED JULY 19, 2013 SUPERSEDES STANDARD PLAN A20C DATED MAY 20, 2011 - PAGE 11 OF THE STANDARD PLANS BOOK DATED 2010.

REVISED STANDARD PLAN RSP A20C

2010 REVISED STANDARD PLAN RSP A20C

4-29-13

Dist	COUNTY	ROUTE	POST MILES TOTAL PROJECT	SHEET No.	TOTAL SHEETS
12	Ora	73,133	16.6,4.2	61	107

REGISTERED CIVIL ENGINEER

April 20, 2012
PLANS APPROVAL DATE

Roberta L. McLaughlin
No. C40375
Exp. 3-31-13
CIVIL
REGISTERED PROFESSIONAL ENGINEER
STATE OF CALIFORNIA

THE STATE OF CALIFORNIA OR ITS OFFICERS OR AGENTS SHALL NOT BE RESPONSIBLE FOR THE ACCURACY OR COMPLETENESS OF SCANNED COPIES OF THIS PLAN SHEET.

TO ACCOMPANY PLANS DATED 06-01-15

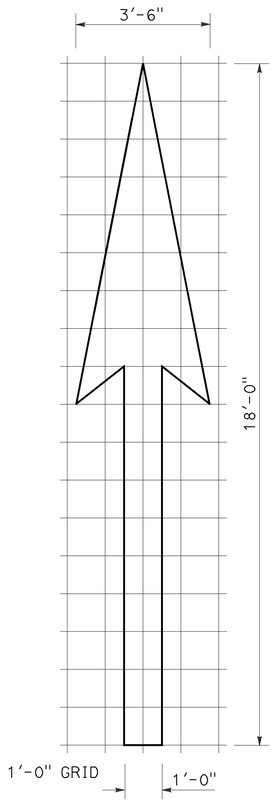

A=25 ft^2

TYPE I 18'-0" ARROW

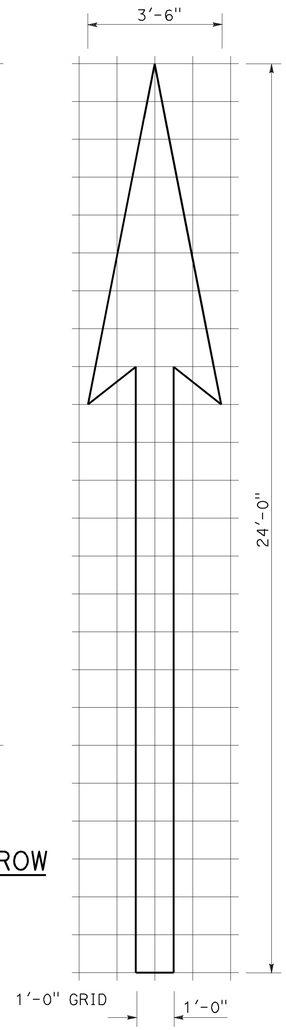

A=31 ft^2

TYPE I 24'-0" ARROW

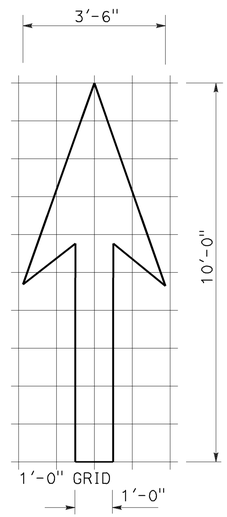

A=14 ft^2

TYPE I 10'-0" ARROW

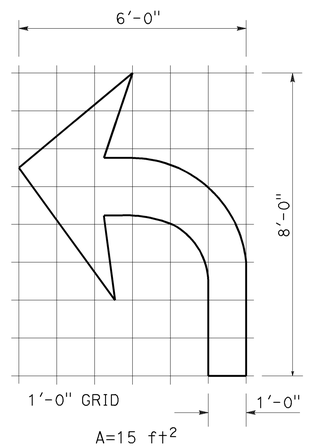

A=15 ft^2

TYPE IV (L) ARROW

(For Type IV (R) arrow, use mirror image)

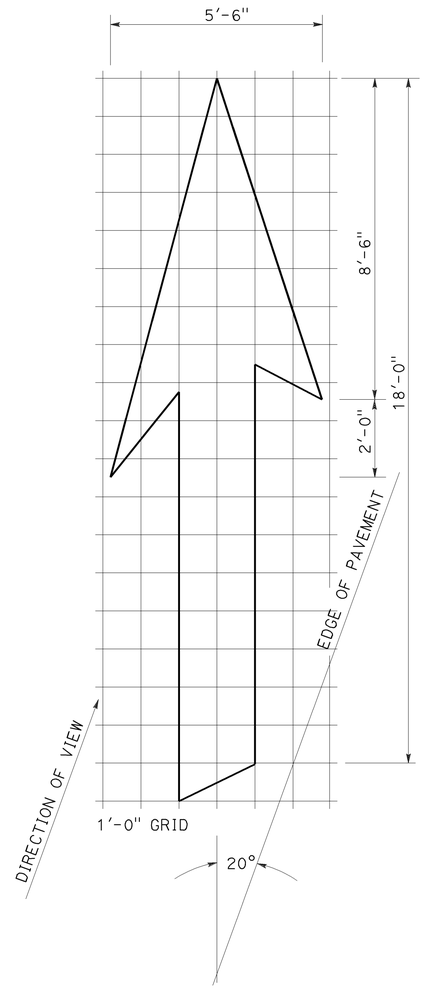

A=42 ft^2

TYPE VI ARROW

Right lane drop arrow
(For left lane, use mirror image)

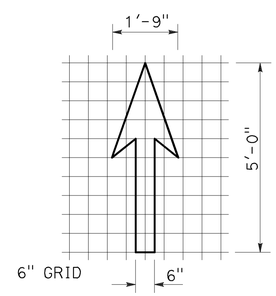

A=3.5 ft^2

BIKE LANE ARROW

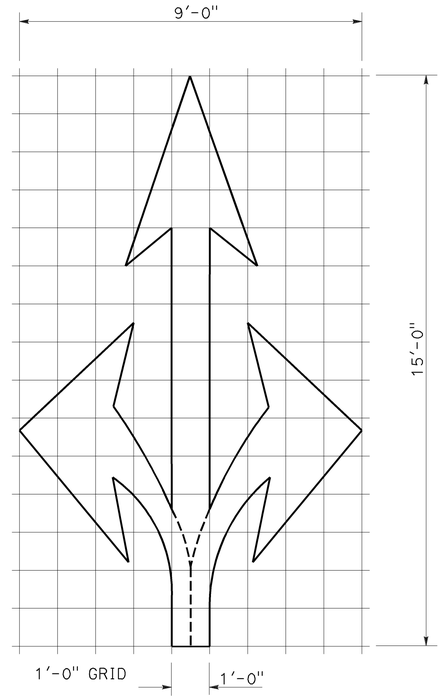

A=36 ft^2

TYPE VIII ARROW

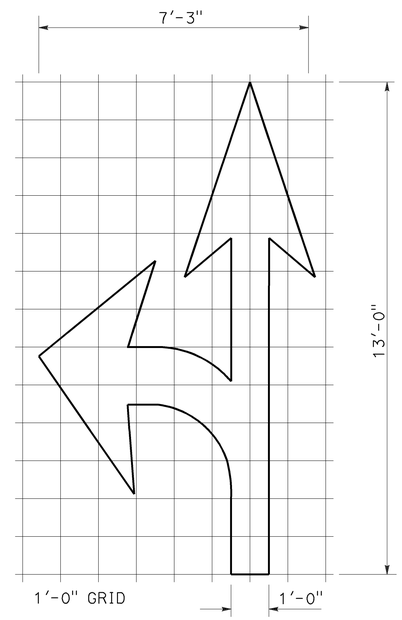

A=27 ft^2

TYPE VII (L) ARROW

(For Type VII (R) arrow, use mirror image)

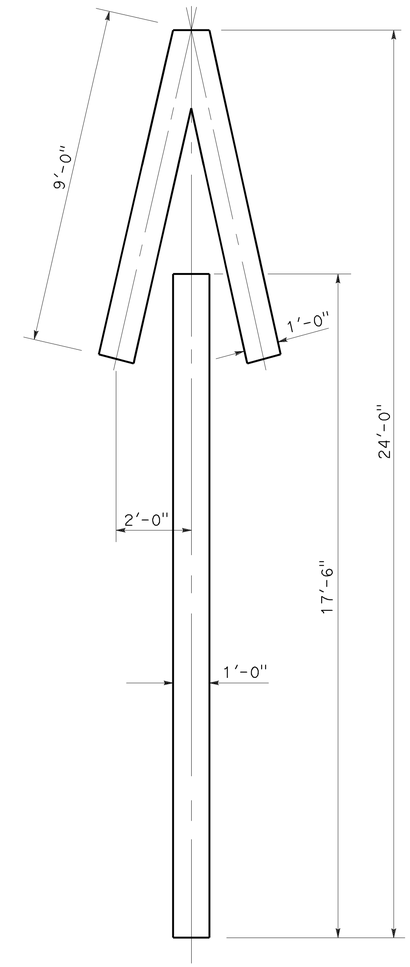

A=33 ft^2

TYPE V ARROW

NOTE:
Minor variations in dimensions may be accepted by the Engineer.

STATE OF CALIFORNIA
DEPARTMENT OF TRANSPORTATION

PAVEMENT MARKINGS ARROWS

NO SCALE

RSP A24A DATED APRIL 20, 2012 SUPERSEDES STANDARD PLAN A24A DATED MAY 20, 2011 - PAGE 13 OF THE STANDARD PLANS BOOK DATED 2010.

REVISED STANDARD PLAN RSP A24A

2010 REVISED STANDARD PLAN RSP A24A

3-14-12

Dist	COUNTY	ROUTE	POST MILES TOTAL PROJECT	SHEET No.	TOTAL SHEETS
12	Ora	73,133	16.6,4.2	62	107

REGISTERED CIVIL ENGINEER

October 19, 2012
PLANS APPROVAL DATE

REGISTERED PROFESSIONAL ENGINEER
Roberta L. McLaughlin
No. C40375
Exp. 3-31-13
CIVIL
STATE OF CALIFORNIA

THE STATE OF CALIFORNIA OR ITS OFFICERS OR AGENTS SHALL NOT BE RESPONSIBLE FOR THE ACCURACY OR COMPLETENESS OF SCANNED COPIES OF THIS PLAN SHEET.

NOTE: TO ACCOMPANY PLANS DATED 06-01-15

Minor variations in dimensions may be accepted by the Engineer.

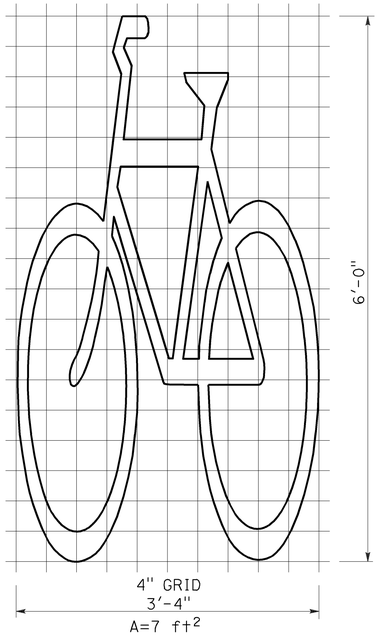

BIKE LANE SYMBOL WITHOUT PERSON

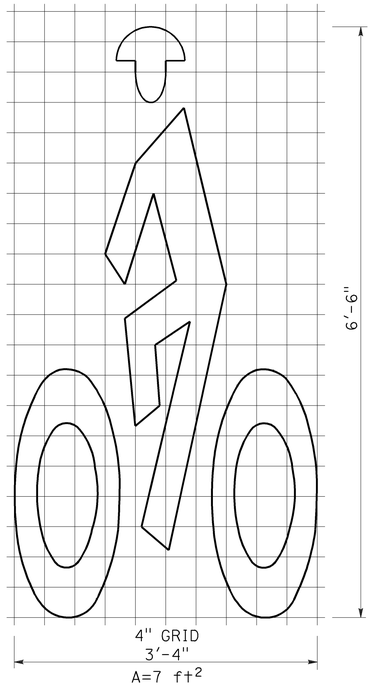

BIKE LANE SYMBOL WITH PERSON

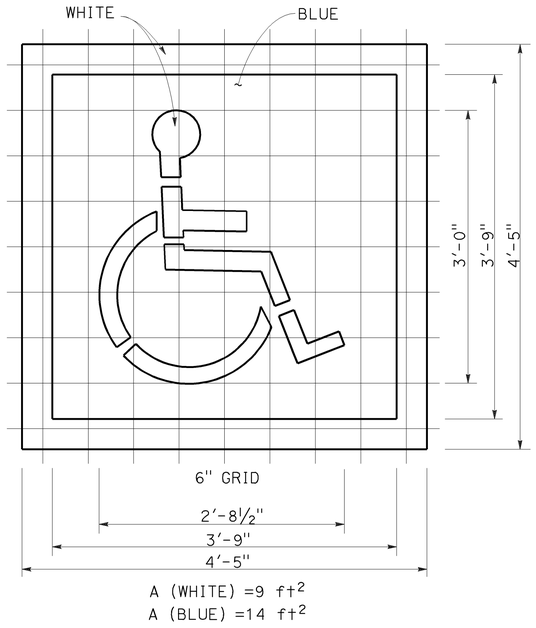

INTERNATIONAL SYMBOL OF ACCESSIBILITY (ISA) MARKING

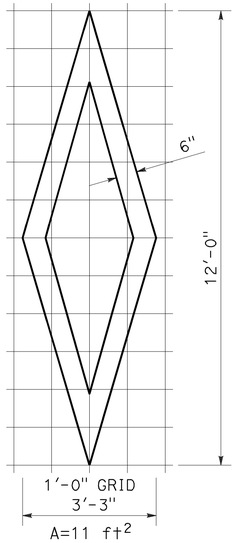

DIAMOND SYMBOL

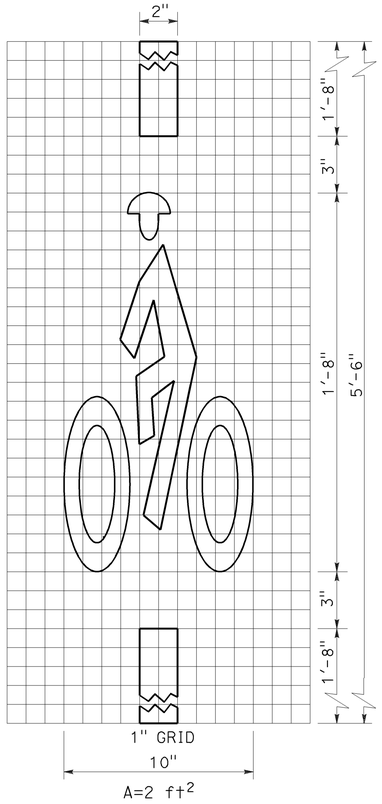

BICYCLE LOOP DETECTOR SYMBOL

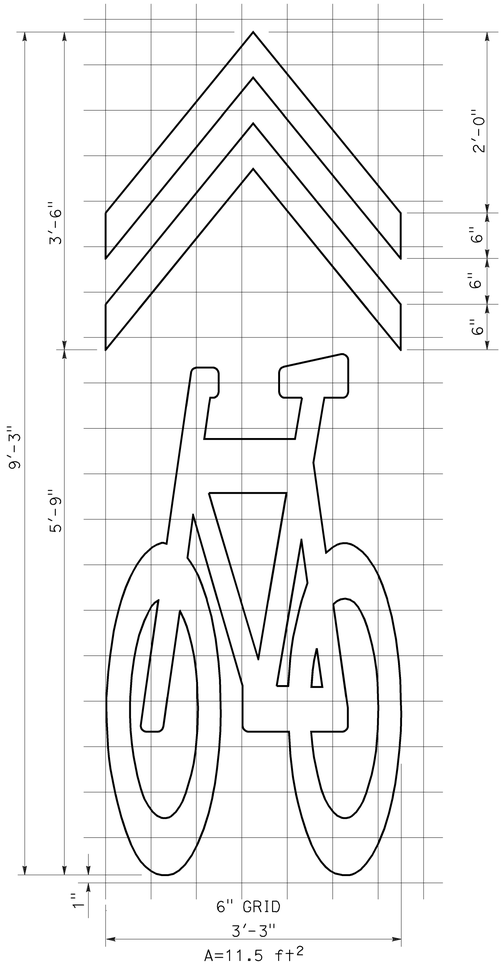

SHARED ROADWAY BICYCLE MARKING

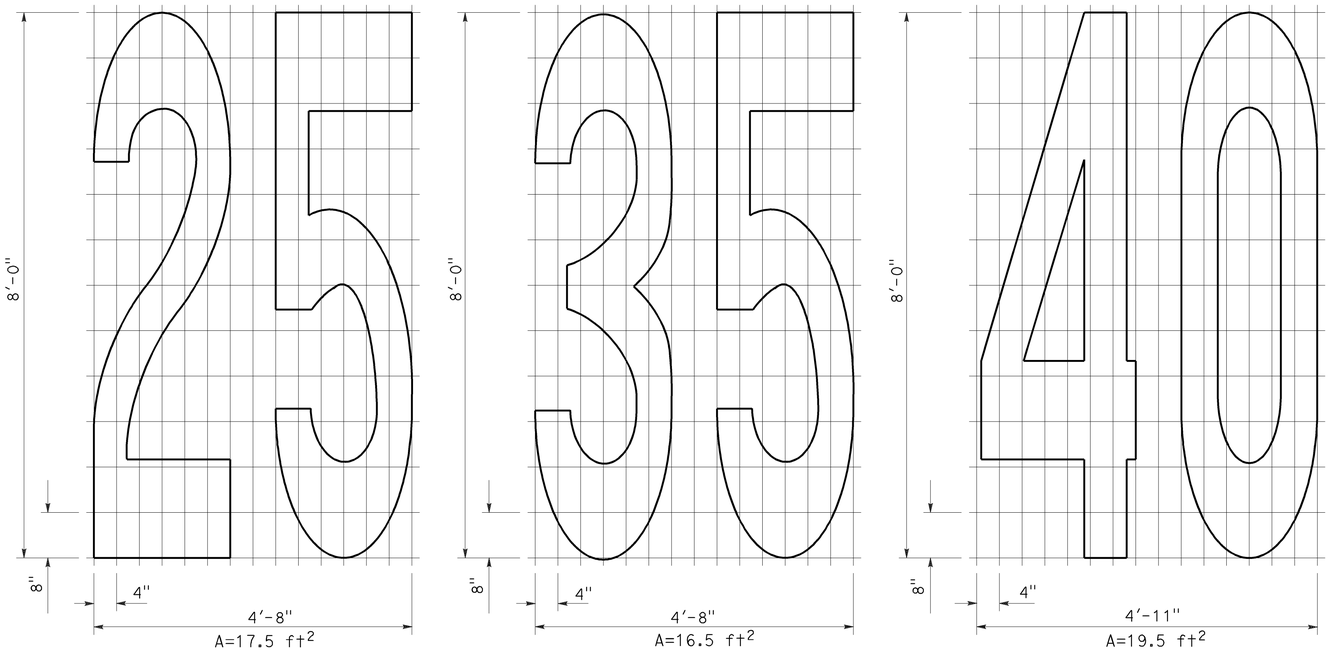

NUMERALS

STATE OF CALIFORNIA
DEPARTMENT OF TRANSPORTATION

PAVEMENT MARKINGS SYMBOLS AND NUMERALS

NO SCALE

RSP A24C DATED OCTOBER 19, 2012 SUPERSEDES STANDARD PLAN A24C DATED MAY 20, 2011 - PAGE 15 OF THE STANDARD PLANS BOOK DATED 2010.

REVISED STANDARD PLAN RSP A24C

2010 REVISED STANDARD PLAN RSP A24C

6-28-12

Dist	COUNTY	ROUTE	POST MILES TOTAL PROJECT	SHEET No.	TOTAL SHEETS
12	Ora	73,133	16.6,4.2	63	107

REGISTERED CIVIL ENGINEER

July 20, 2012
PLANS APPROVAL DATE

REGISTERED PROFESSIONAL ENGINEER
Roberta L. McLaughlin
No. C40375
Exp. 3-31-13
CIVIL
STATE OF CALIFORNIA

THE STATE OF CALIFORNIA OR ITS OFFICERS OR AGENTS SHALL NOT BE RESPONSIBLE FOR THE ACCURACY OR COMPLETENESS OF SCANNED COPIES OF THIS PLAN SHEET.

TO ACCOMPANY PLANS DATED 06-01-15

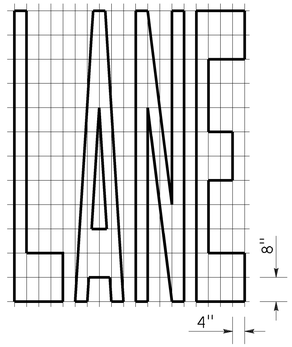

A=24 ft^2

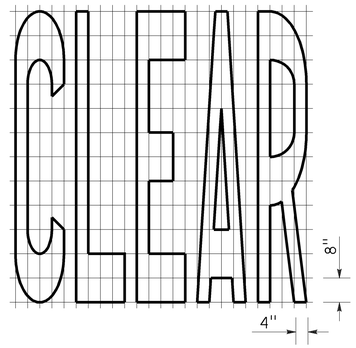

A=27 ft^2

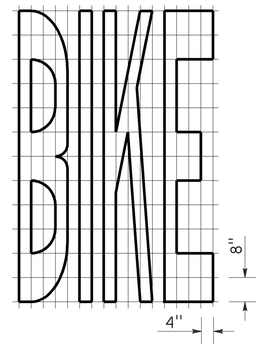

A=21 ft^2

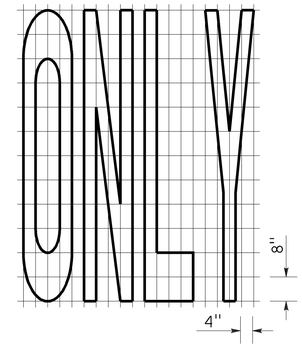

A=22 ft^2

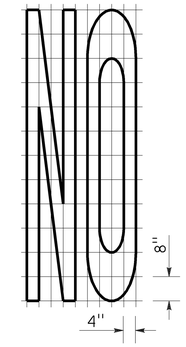

A=14 ft^2

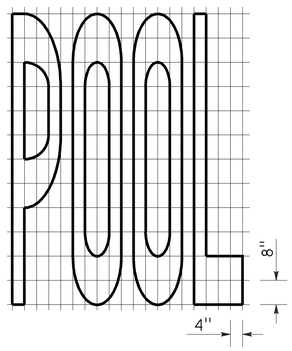

A=23 ft^2

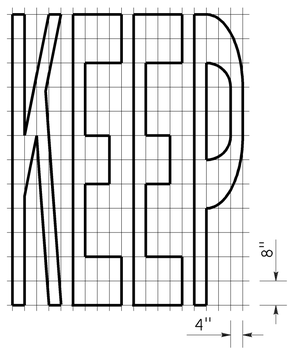

A=24 ft^2

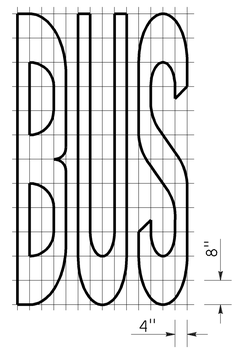

A=20 ft^2

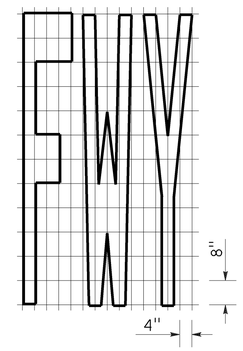

A=16 ft^2

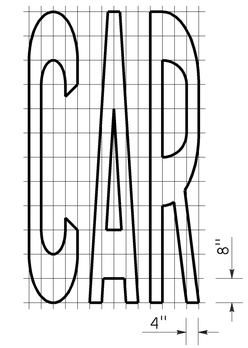

A=17 ft^2

WORD MARKINGS			
ITEM	ft^2	ITEM	ft^2
LANE	24	NO	14
POOL	23	BIKE	21
CAR	17	BUS	20
CLEAR	27	ONLY	22
KEEP	24	FWY	16

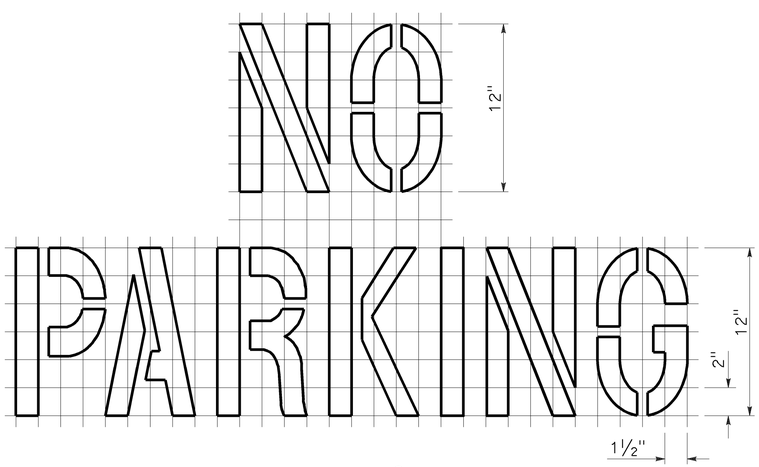

A=2 ft^2
See Notes 6 and 7

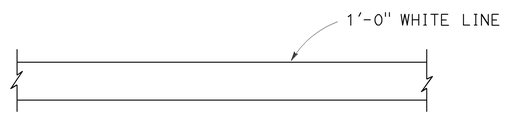

LIMIT LINE (STOP LINE)

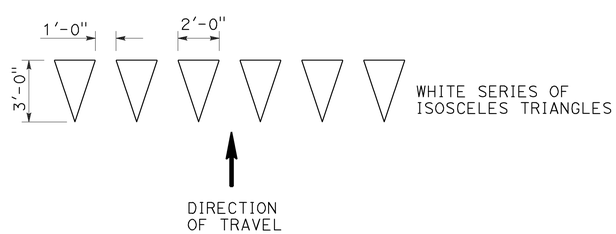

YIELD LINE

NOTES:

1. If a message consists of more than one word, it should read "UP", i.e., the first word should be nearest the driver.
2. The space between words should be at least four times the height of the characters for low speed roads, but not more than ten times the height of the characters. The space may be reduced appropriately where there is limited space because of local conditions.
3. Minor variations in dimensions may be accepted by the Engineer.
4. Portions of a letter, number or symbol may be separated by connecting segments not to exceed 2" in width.
5. The words "NO PARKING" pavement marking is to be used for parking facilities. For typical locations of markings, see Standard Plans A90A and A90B.
6. The words "NO PARKING", shall be painted in white letters no less than 1'-0" high on a contrasting background and located so that it is visible to traffic enforcement officials.

STATE OF CALIFORNIA
DEPARTMENT OF TRANSPORTATION

PAVEMENT MARKINGS WORDS, LIMIT AND YIELD LINES

NO SCALE

RSP A24E DATED JULY 20, 2012 SUPERSEDES STANDARD PLAN A24E
DATED MAY 20, 2011 - PAGE 17 OF THE STANDARD PLANS BOOK DATED 2010.

REVISED STANDARD PLAN RSP A24E

2010 REVISED STANDARD PLAN RSP A24E

6-12-12

Dist	COUNTY	ROUTE	POST MILES TOTAL PROJECT	SHEET No.	TOTAL SHEETS
12	Ora	73,133	16.6,4.2	64	107

REGISTERED CIVIL ENGINEER

July 20, 2012
PLANS APPROVAL DATE

REGISTERED PROFESSIONAL ENGINEER
Roberta L. McLaughlin
No. C40375
Exp. 3-31-13
CIVIL
STATE OF CALIFORNIA

THE STATE OF CALIFORNIA OR ITS OFFICERS OR AGENTS SHALL NOT BE RESPONSIBLE FOR THE ACCURACY OR COMPLETENESS OF SCANNED COPIES OF THIS PLAN SHEET.

TO ACCOMPANY PLANS DATED 06-01-15

2010 REVISED STANDARD PLAN RSP A24F

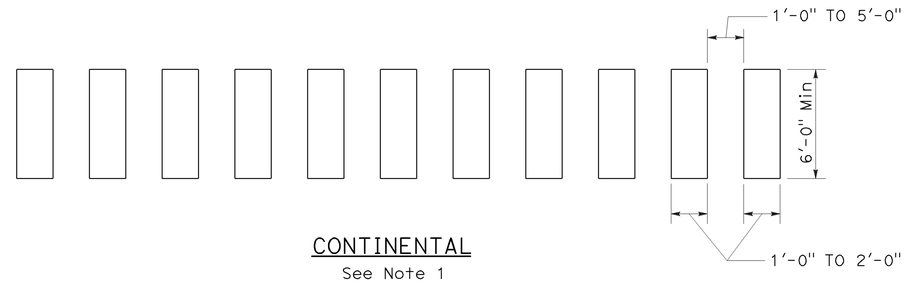

CONTINENTAL
See Note 1

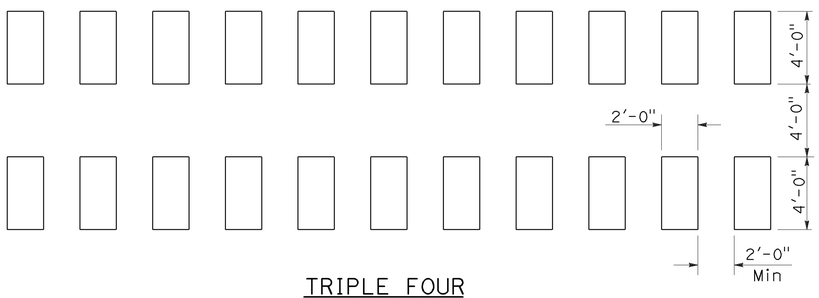

TRIPLE FOUR
See Note 1

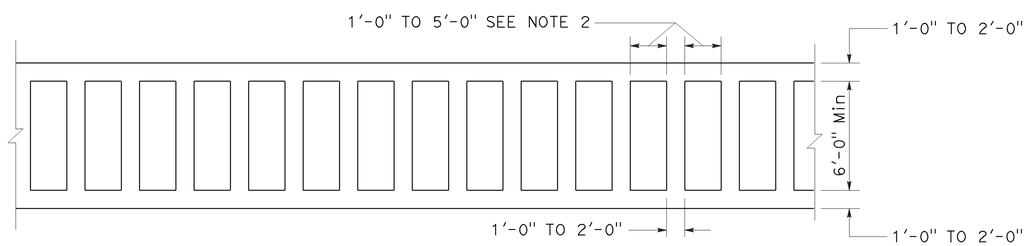

LADDER

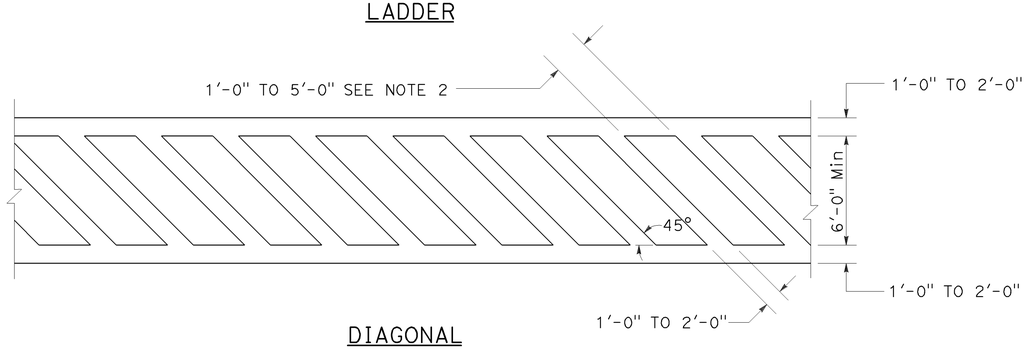

DIAGONAL

HIGHER VISIBILITY CROSSWALKS

NOTES:

1. Spaces between markings should be placed in wheel tracks of each lane.
2. Spacings not to exceed 2.5 times width of longitudinal line.
3. All crosswalk markings must be white except for those near schools must be yellow.

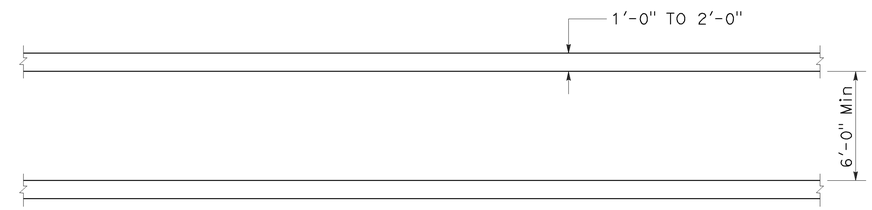

BASIC

STATE OF CALIFORNIA
DEPARTMENT OF TRANSPORTATION

PAVEMENT MARKINGS CROSSWALKS

NO SCALE

RSP A24F DATED JULY 20, 2012 SUPPLEMENTS THE STANDARD PLANS BOOK DATED 2010.

REVISED STANDARD PLAN RSP A24F

Dist	COUNTY	ROUTE	POST MILES TOTAL PROJECT	SHEET No.	TOTAL SHEETS
12	Ora	73,133	16.6,4.2	65	107

Randell D. Hiatt
REGISTERED CIVIL ENGINEER

July 19, 2013
PLANS APPROVAL DATE

REGISTERED PROFESSIONAL ENGINEER
Randell D. Hiatt
No. C50200
Exp. 6-30-15
CIVIL
STATE OF CALIFORNIA

THE STATE OF CALIFORNIA OR ITS OFFICERS OR AGENTS SHALL NOT BE RESPONSIBLE FOR THE ACCURACY OR COMPLETENESS OF SCANNED COPIES OF THIS PLAN SHEET.

TO ACCOMPANY PLANS DATED 06-01-15

2010 REVISED STANDARD PLAN RSP A77L3

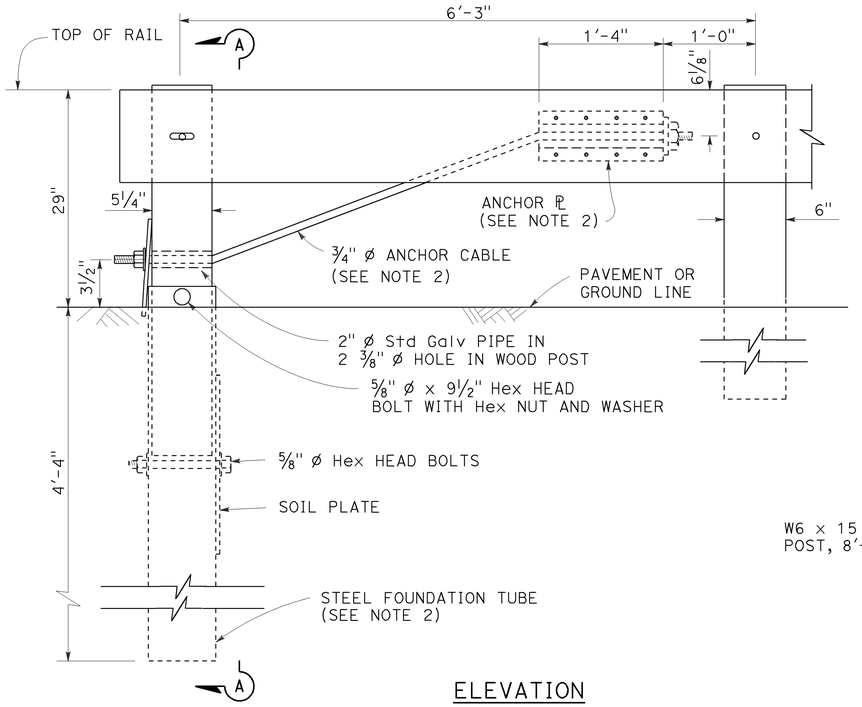

ELEVATION
END ANCHOR
ASSEMBLY (TYPE SFT)

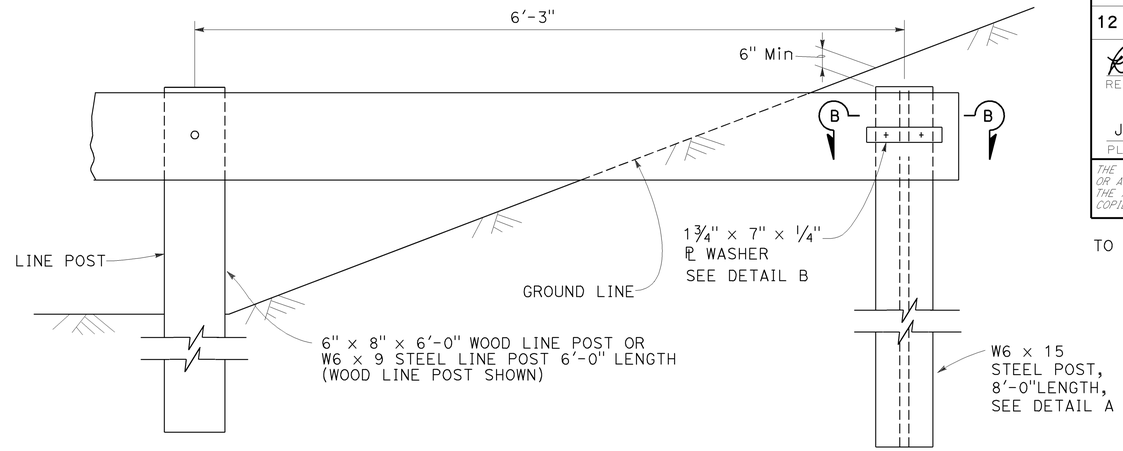

BURIED POST END ANCHOR

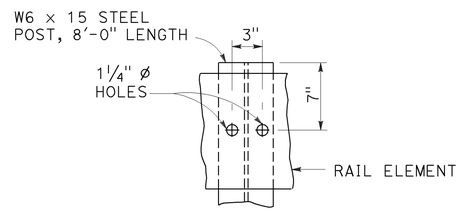

DETAIL A

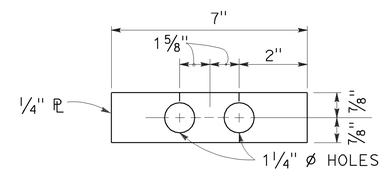

DETAIL B

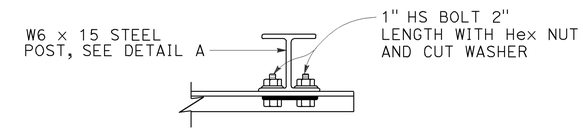

SECTION B-B

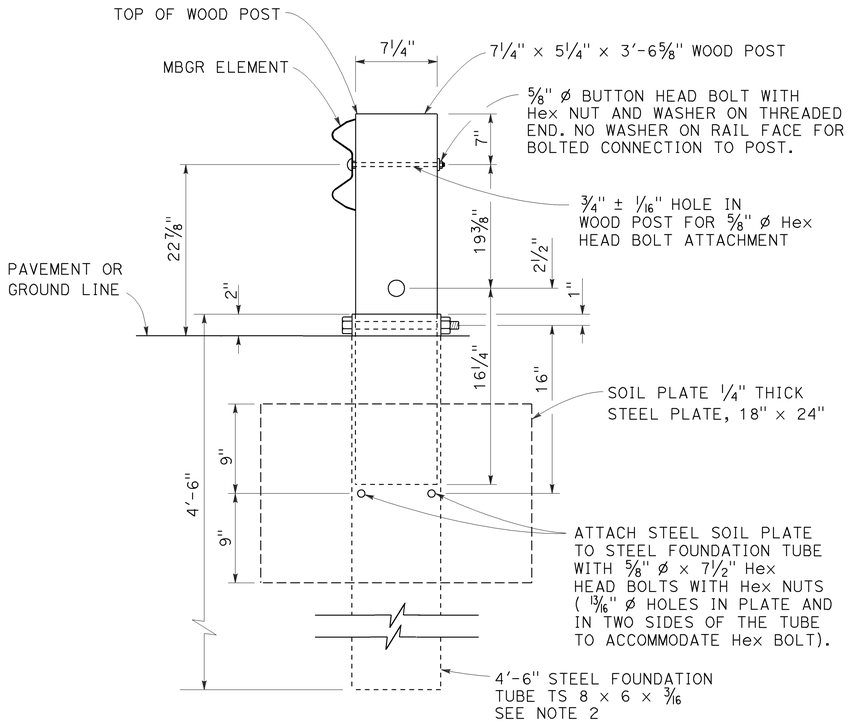

SECTION A-A

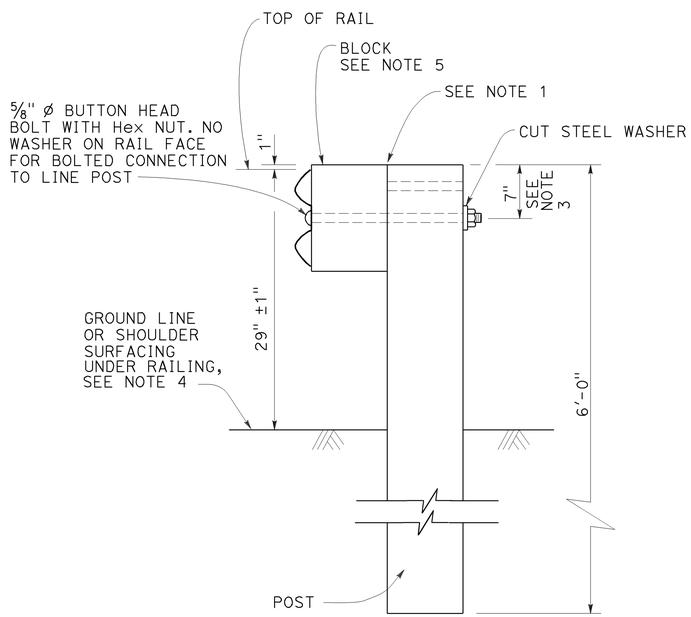

TYPICAL LINE
POST INSTALLATION

NOTES:

1. For wood post and wood block, toenail with 2-16d Galv nails in top of block. For steel post and notched wood or plastic block, notched face of block faces steel post.
2. A 6'-0" Length steel foundation tube, TS 8 x 6 x 3/16, without a soil plate, may be furnished and installed in place of the 4'-6" length steel foundation tube and soil plate shown, Minimum embadment of the 6'-0" length tube shall be 5'-9". A 5/8" ø Hex head bolt and nut shall be installed in the hole in the 6'-0" length tube to keep the wood post from dropping into the tube.
3. To connect railing to 27" terminal system end treatment, transition the top of railing height at a ratio of 120:1 to terminal system end treatment height plus one 12'-6" standard railing section at the transitioned height for a horizontal connection to the end treatment.
4. Install posts in soil.
5. See Revised Standard Plans RSP A77N1 and RSP A77N2 for details.
6. Holes excavation in the slope to construct the buried post end anchor shall be backfilled with selected earth, placed in layers approximately 1'-0" thick. Each layer shall be moistened and thoroughly compacted.

STATE OF CALIFORNIA
DEPARTMENT OF TRANSPORTATION

METAL BEAM GUARD RAILING RECONSTRUCT INSTALLATION

NO SCALE

RSP A77L3 DATED JULY 19, 2013 SUPPLEMENTS THE STANDARD PLANS BOOK DATED 2010.

REVISED STANDARD PLAN RSP A77L3

Dist	COUNTY	ROUTE	POST MILES TOTAL PROJECT	SHEET No.	TOTAL SHEETS
12	Ora	73,133	16.6,4.2	66	107

REGISTERED CIVIL ENGINEER

July 19, 2013
PLANS APPROVAL DATE

REGISTERED PROFESSIONAL ENGINEER
Michael Janzen
No. 44788
Exp. 03-31-14
CIVIL
STATE OF CALIFORNIA

THE STATE OF CALIFORNIA OR ITS OFFICERS OR AGENTS SHALL NOT BE RESPONSIBLE FOR THE ACCURACY OR COMPLETENESS OF SCANNED COPIES OF THIS PLAN SHEET.

TO ACCOMPANY PLANS DATED 06-01-15

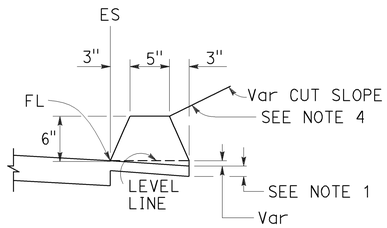

TYPE A
See Note 3

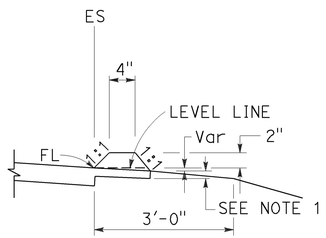

TYPE C

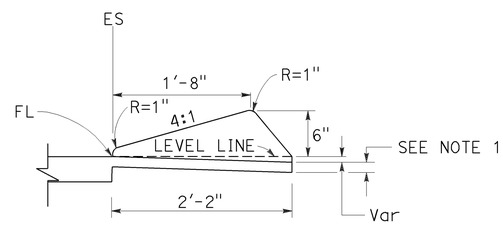

TYPE D

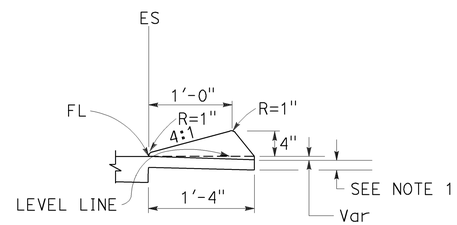

TYPE E

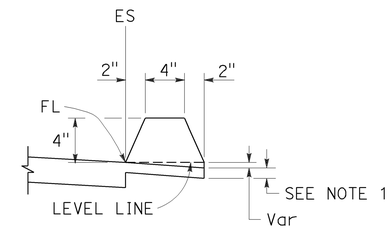

TYPE F
See Note 5

DIKES

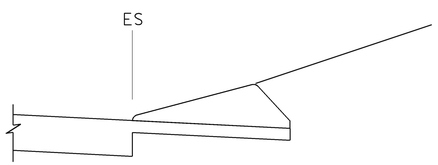

CASE C-1
Cut Slope

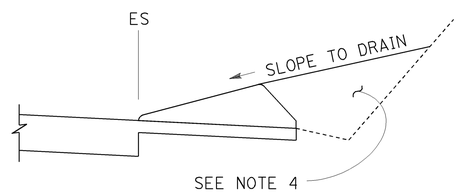

CASE C-2
Cut Slope

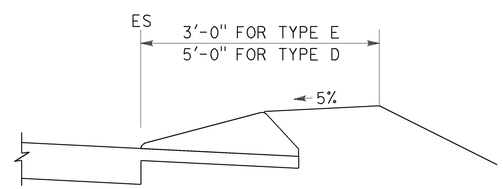

CASE F

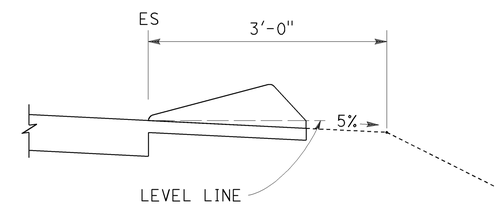

CASE R
See Note 2

TYPE D AND E BACKFILL DETAILS

NOTES:

1. For HMA shoulders only, extend top layer of HMA placed on the shoulder under dike with no joint at the ES. For projects with OGFC shoulders, do not extend OGFC under dike. See project plans for modified dike detail.
2. Case R applies to retrofit only projects where restrictive conditions do not provide enough width for Case F backfill.
3. Type A dike only to be used where restrictive slope conditions do not provide enough width to use Type D or Type E dike.
4. Fill and compact with excavated material to top of dike.
5. Use Type F dike, where dike is required with guard railing installations. See Revised Standard Plan RSP A77N4 for dike positioning details.

DIKE QUANTITIES

TYPE	CUBIC YARDS PER LINEAR FOOT
A	0.0135
C	0.0038
D	0.0293
E	0.0130
F	0.0066

Quantities based on 5% cross slope.

STATE OF CALIFORNIA
DEPARTMENT OF TRANSPORTATION

HOT MIX ASPHALT DIKES

NO SCALE

RSP A87B DATED JULY 19, 2013 SUPERSEDES STANDARD PLAN A87B DATED MAY 20, 2011 - PAGE 120 OF THE STANDARD PLANS BOOK DATED 2010.

REVISED STANDARD PLAN RSP A87B

2010 REVISED STANDARD PLAN RSP A87B

6-27-13

Dist	COUNTY	ROUTE	POST MILES TOTAL PROJECT	SHEET No.	TOTAL SHEETS
12	Ora	73,133	16.6,4.2	67	107

REGISTERED CIVIL ENGINEER

March 21, 2014
PLANS APPROVAL DATE

Hector David Cordova No. C41957 Exp. 3-31-14 CIVIL — REGISTERED PROFESSIONAL ENGINEER — STATE OF CALIFORNIA

THE STATE OF CALIFORNIA OR ITS OFFICERS OR AGENTS SHALL NOT BE RESPONSIBLE FOR THE ACCURACY OR COMPLETENESS OF SCANNED COPIES OF THIS PLAN SHEET.

TO ACCOMPANY PLANS DATED 06-01-15

2010 REVISED STANDARD PLAN RSP A88A

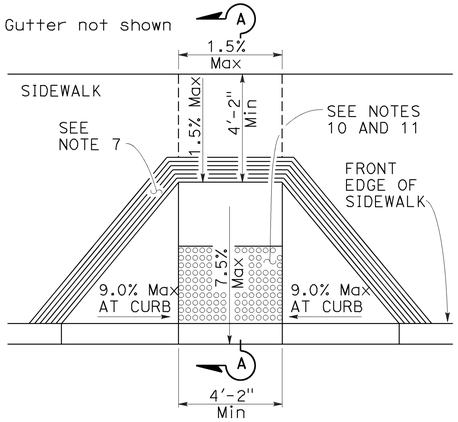

CASE A

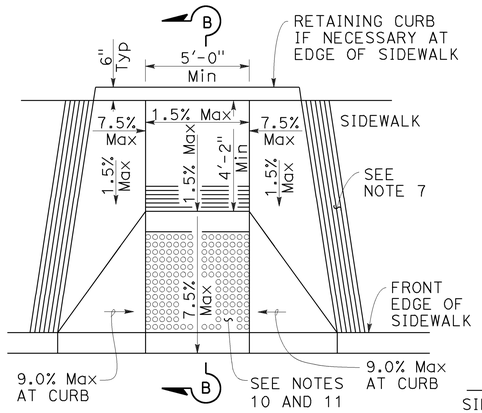

CASE B

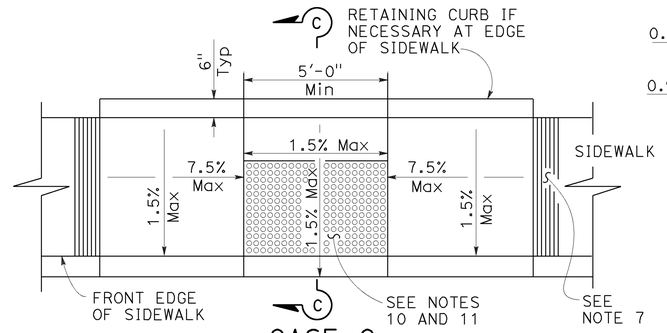

CASE C

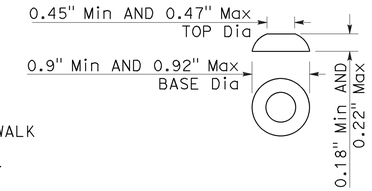

RAISED TRUNCATED DOME

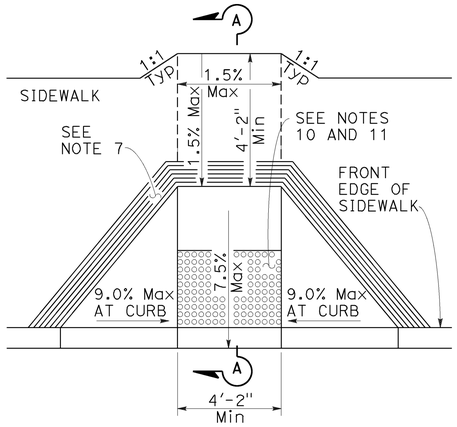

CASE D

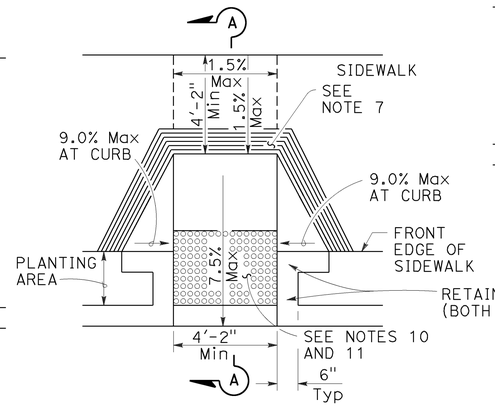

CASE E

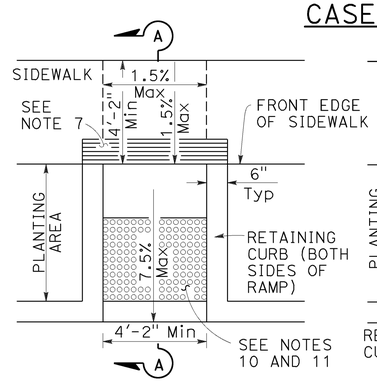

CASE F

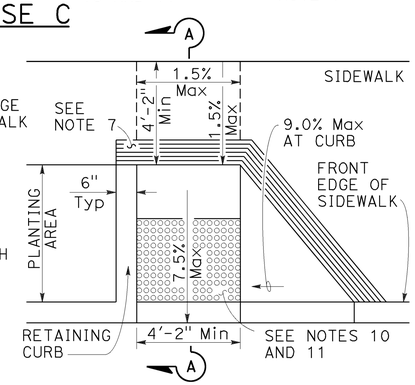

CASE G

See Note 4

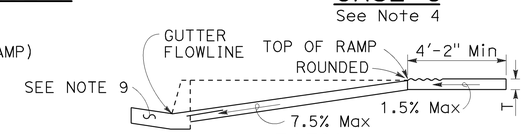

SECTION A-A

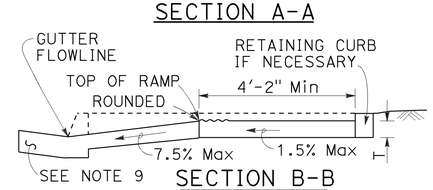

SECTION B-B

Depress entire sidewalk as required

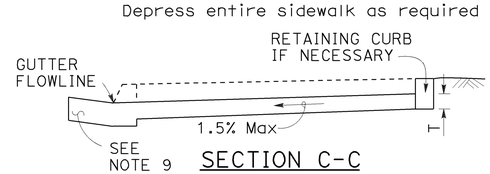

SECTION C-C

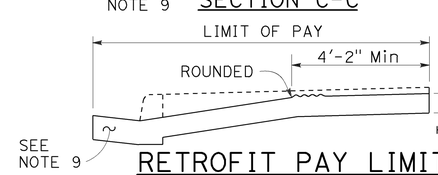

RETROFIT PAY LIMITS

Existing curb and sidewalk

RAISED TRUNCATED DOME PATTERN (IN-LINE)

DETECTABLE WARNING SURFACE

See Note 10

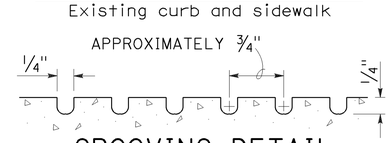

GROOVING DETAIL

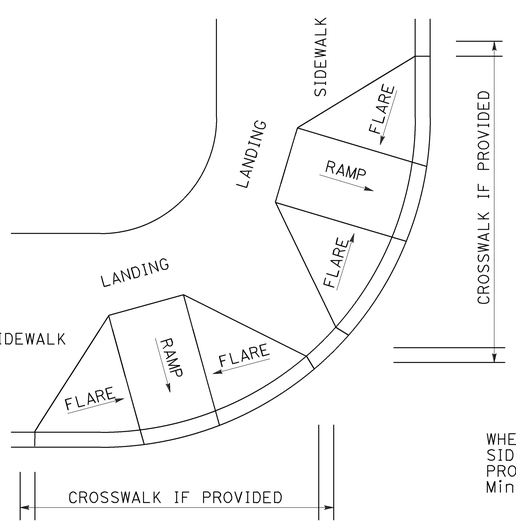

DETAIL A

TYPICAL TWO-RAMP CORNER INSTALLATION

See Note 1

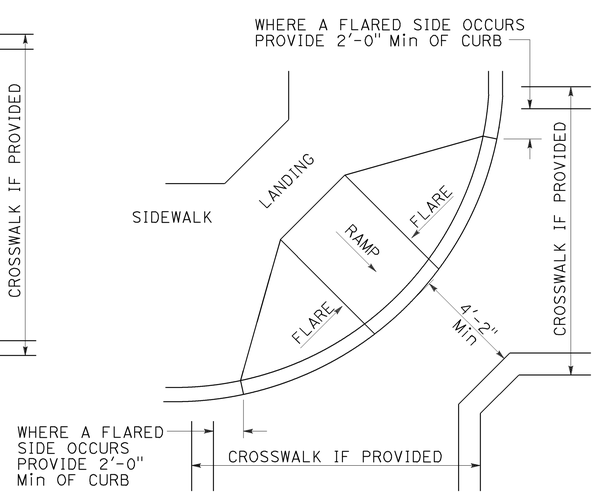

DETAIL B

TYPICAL ONE-RAMP CORNER INSTALLATION

See Notes 1 and 3

NOTES:

1. As site conditions dictate, Case A through Case G curb ramps may be used for corner installations similar to those shown in Detail A and Detail B. The case of curb ramps used in Detail A do not have to be the same. Case A through Case G curb ramps also may be used at mid block locations, as site conditions dictate.
2. If distance from curb to back of sidewalk is too short to accommodate ramp and 4'-2" platform (landing) as shown in Case A, the sidewalk may be depressed longitudinally as in Case B, or C or may be widened as in Case D.
3. When ramp is located in center of curb return, crosswalk configuration must be similar to that shown for Detail B.
4. As site conditions dictate, the retaining curb side and the flared side of the Case G ramp shall be constructed in reversed position.
5. If located on a curve, the sides of the ramp need not be parallel, but the minimum width of the ramp shall be 4'-2".
6. Side slope of ramp flares vary uniformly from a maximum of 9.0% at curb to conform with longitudinal sidewalk slope adjacent to top of the ramp, except in Case C and Case F.
7. The curb ramp shall be outlined, as shown, with a 1'-0" wide border with 1/4" grooves approximately 3/4" on center. See grooving detail.
8. Transitions from ramps and landing to walks, gutters or streets shall be flush (no lip) and free of abrupt changes.
9. Counter slopes of adjoining gutters and road surfaces immediately adjacent to and within 24 inches of the curb ramp shall not be steeper than 1:20 (5.0%). Gutter pan slope shall not exceed 1" of depth for each 2'-0" of width.
10. Curb ramps shall have a detectable warning surface that extends the full width and 3'-0" depth of the ramp. A 4'-0" wide detectable warning surface may be used on a 4'-2" wide curb ramp. Detectable Warning Surfaces shall conform to the requirements in the Standard Specifications.
11. The edge of the detectable warning surface nearest the street shall be between 6" and 8" from the gutter flowline.
12. Sidewalk and ramp thickness, "T", shall be 3½" minimum.
13. Utility pull boxes, manholes, vaults and all other utility facilities within the boundaries of the curb ramp will be relocated or adjusted to grade by the owner prior to, or in conjunction with, curb ramp construction.
14. Detectable warning surface may have to be cut to allow removal of utility covers while maintaining full detectable warning width and depth.

STATE OF CALIFORNIA
DEPARTMENT OF TRANSPORTATION

CURB RAMP DETAILS

NO SCALE

RSP A88A DATED MARCH 21, 2014 SUPERSEDES RSP A88A DATED JULY 19, 2013 AND STANDARD PLAN A88A DATED MAY 20, 2011 - PAGE 121 OF THE STANDARD PLANS BOOK DATED 2010.

REVISED STANDARD PLAN RSP A88A

2-25-14

Dist	COUNTY	ROUTE	POST MILES TOTAL PROJECT	SHEET No.	TOTAL SHEETS
12	Ora	73,133	16.6,4.2	68	107

REGISTERED CIVIL ENGINEER

March 21, 2014
PLANS APPROVAL DATE

Hector David Cordova No. C41957 Exp. 3-31-14 CIVIL — REGISTERED PROFESSIONAL ENGINEER — STATE OF CALIFORNIA

THE STATE OF CALIFORNIA OR ITS OFFICERS OR AGENTS SHALL NOT BE RESPONSIBLE FOR THE ACCURACY OR COMPLETENESS OF SCANNED COPIES OF THIS PLAN SHEET.

TO ACCOMPANY PLANS DATED 06-01-15

Gutter not shown

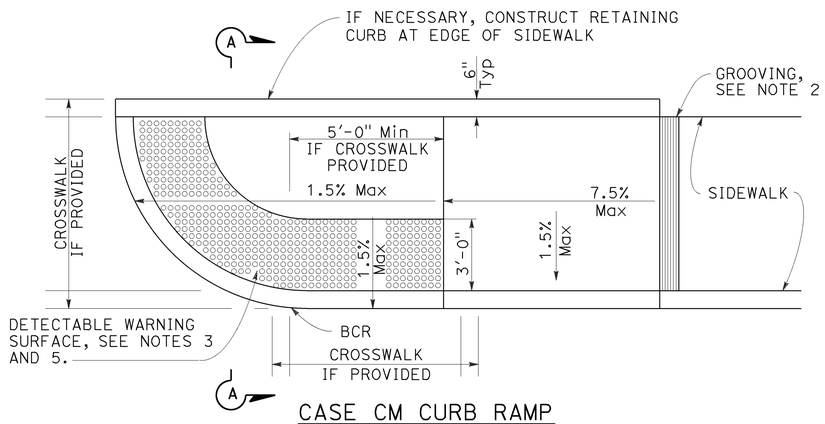

CASE CM CURB RAMP

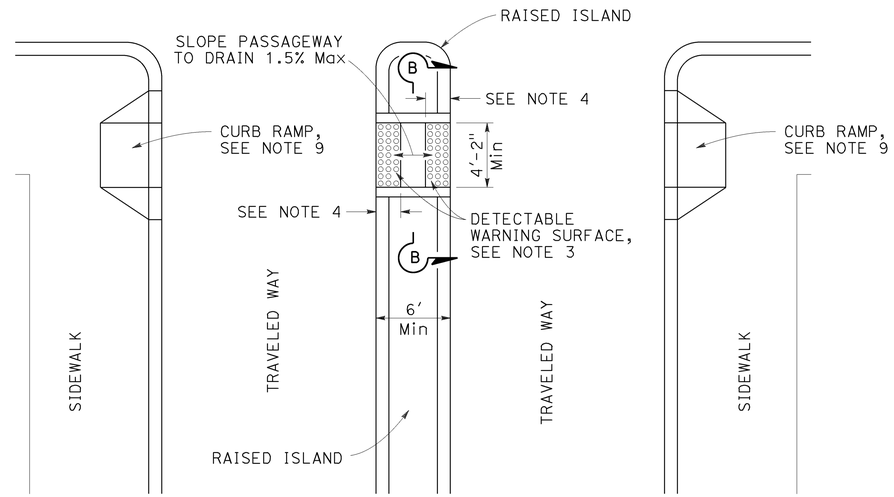

TYPE A PASSAGEWAY

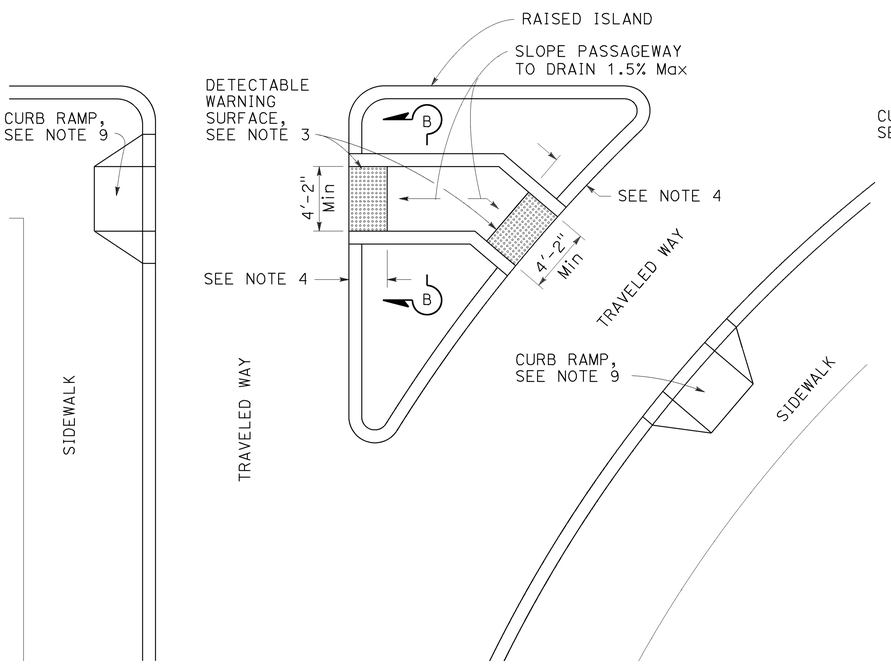

TYPE B PASSAGEWAY

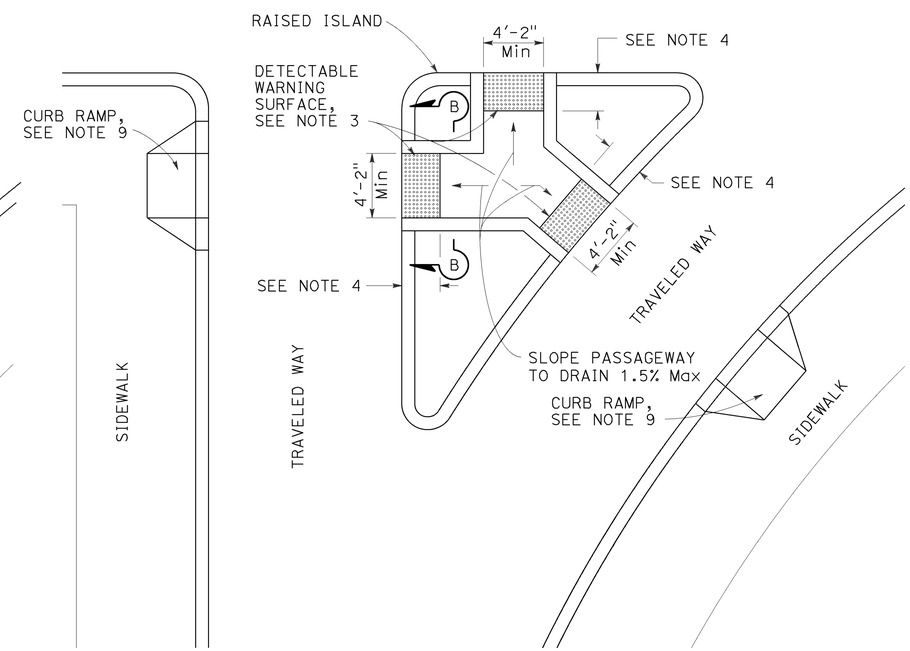

TYPE C PASSAGEWAY

NOTES:

1. Sidewalk, ramp and passageway thickness, "T", shall be 3½" minimum.
2. For details of grooving used with Case CM curb ramp, see Revised Standard Plan RSP A88A.
3. For details of detectable warning surfaces, see Revised Standard Plan RSP A88A.
4. Where an island passageway length is greater than or equal to 6'-0", but less than 8'-0", each detectable warning surface shall extend the full width and 2'-0" depth of the passageway length. Where an island passageway length is greater than or equal to 8'-0", each detectable warning surface shall extend the full width and 3'-0" depth of the passageway length. A 4'-0" wide detectable warning surface may be used on a 4'-2" wide island passageway.
5. For Case CM curb ramp, the edge of the detectable warning surface nearest the street shall be between 6" and 8" from the gutter flowline.
6. Transitions from ramps to walks, gutters or streets shall be flush (no lip) and free of abrupt changes.
7. Utility pull boxes, manholes, vaults and all other utility facilities within the boundaries of the curb ramp will be relocated or adjusted to grade by the owner prior to, or in conjunction with, curb ramp construction.
8. Detectable warning surface may have to be cut to allow removal of utility covers while maintaining full detectable warning width and depth.
9. For additional curb ramp details, see Revised Standard Plan RSP A88A.

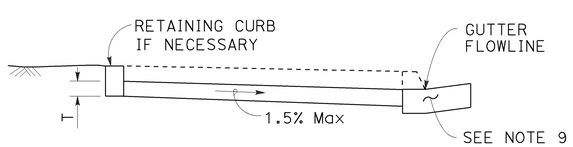

SECTION A-A

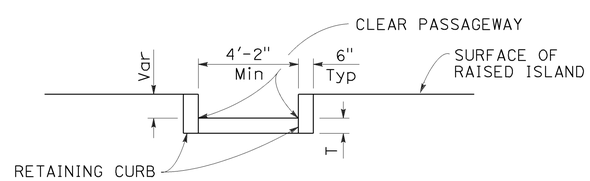

SECTION B-B

STATE OF CALIFORNIA
DEPARTMENT OF TRANSPORTATION

CURB RAMP AND ISLAND PASSAGEWAY DETAILS

NO SCALE

RSP A88B DATED MARCH 21, 2014 SUPERSEDES RSP A88B DATED JULY 19, 2013 AND STANDARD PLAN A88B DATED MAY 20, 2011 - PAGE 122 OF THE STANDARD PLANS BOOK DATED 2010.

REVISED STANDARD PLAN RSP A88B

2010 REVISED STANDARD PLAN RSP A88B

2-25-14

DIST	COUNTY	ROUTE	POST MILES TOTAL PROJECT	SHEET No.	TOTAL SHEETS
12	Ora	73,133	16.6,4.2	69	107

REGISTERED CIVIL ENGINEER

November 15, 2013
PLANS APPROVAL DATE

REGISTERED PROFESSIONAL ENGINEER Cornelis M. Hakim No. C55610 Exp. 12-31-14 CIVIL STATE OF CALIFORNIA

THE STATE OF CALIFORNIA OR ITS OFFICERS OR AGENTS SHALL NOT BE RESPONSIBLE FOR THE ACCURACY OR COMPLETENESS OF SCANNED COPIES OF THIS PLAN SHEET.

TO ACCOMPANY PLANS DATED 06-01-15

ABBREVIATIONS:

SE SAFETY EDGE

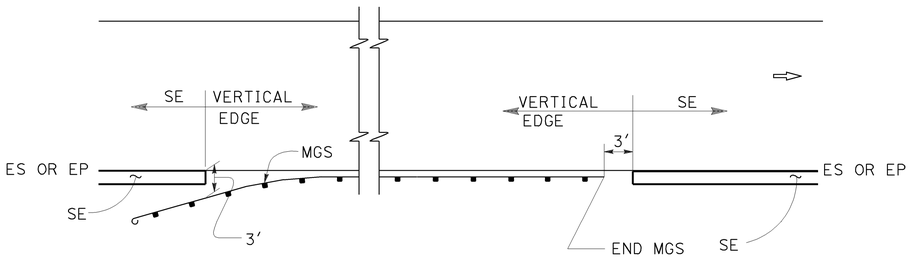

MGS

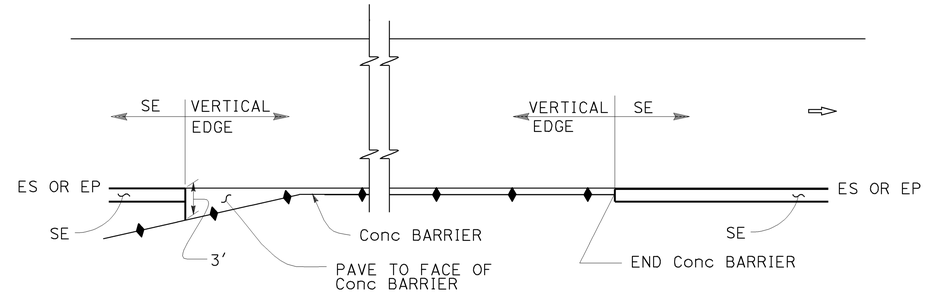

CONCRETE BARRIER

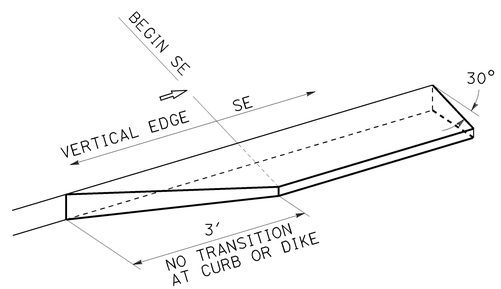

TRANSITION DETAIL FOR CONCRETE ONLY

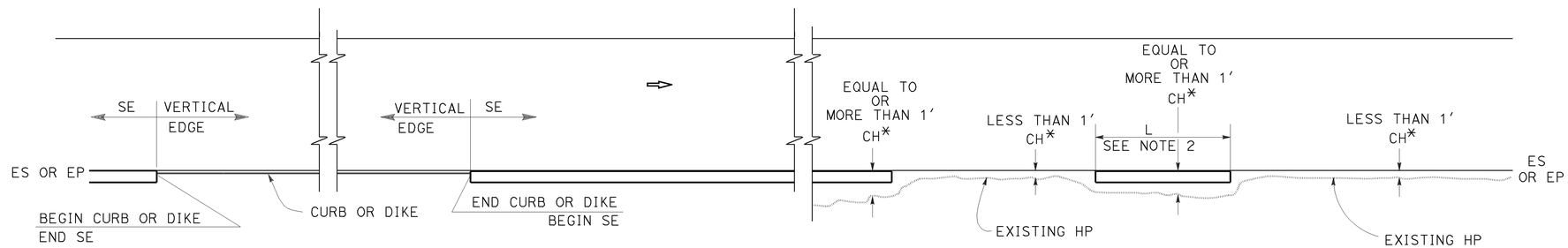

CURB OR DIKE

NARROW SIDE SLOPE

* CH = Distance from ES or EP to existing HP.

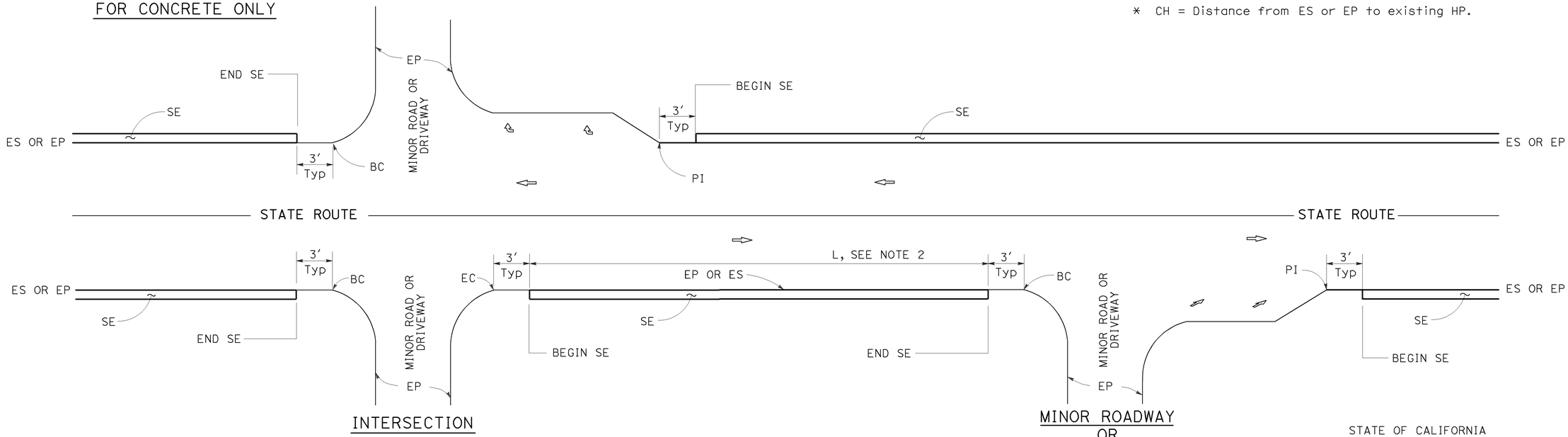

INTERSECTION

MINOR ROADWAY OR DRIVEWAY

DRIVEWAY AND INTERSECTION

NOTES:

1. For details not shown, see Revised Standard Plans RSP P75 and RSP P76.
2. Safety edge is optional when L is less than 30′.

STATE OF CALIFORNIA
DEPARTMENT OF TRANSPORTATION

PAVEMENT EDGE TREATMENTS

NO SCALE

RSP P74 DATED NOVEMBER 15, 2013 SUPERSEDES RSP P74 DATED JANUARY 20, 2012 THAT SUPPLEMENTS THE STANDARD PLANS BOOK DATED 2010.

REVISED STANDARD PLAN RSP P74

2010 REVISED STANDARD PLAN RSP P74

10-11-13

DIST	COUNTY	ROUTE	POST MILES TOTAL PROJECT	SHEET No.	TOTAL SHEETS
12	Ora	73,133	16.6,4.2	70	107

REGISTERED CIVIL ENGINEER

November 15, 2013
PLANS APPROVAL DATE

REGISTERED PROFESSIONAL ENGINEER Cornelis M. Hakim No. C55610 Exp. 12-31-14 CIVIL STATE OF CALIFORNIA

THE STATE OF CALIFORNIA OR ITS OFFICERS OR AGENTS SHALL NOT BE RESPONSIBLE FOR THE ACCURACY OR COMPLETENESS OF SCANNED COPIES OF THIS PLAN SHEET.

TO ACCOMPANY PLANS DATED 06-01-15

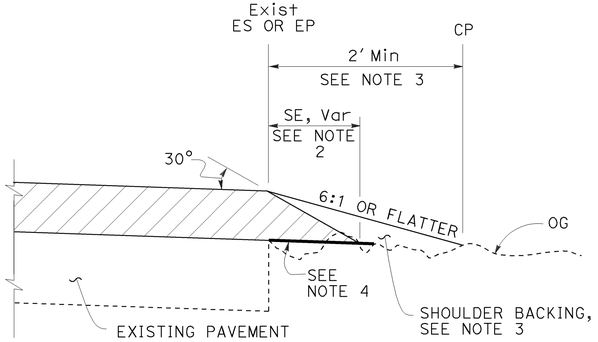

CASE A
Safety Edge

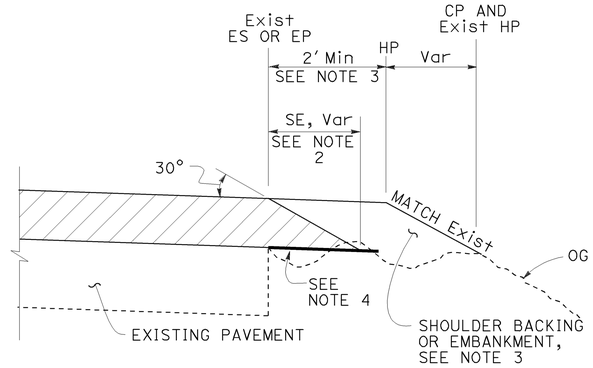

CASE B
Safety Edge

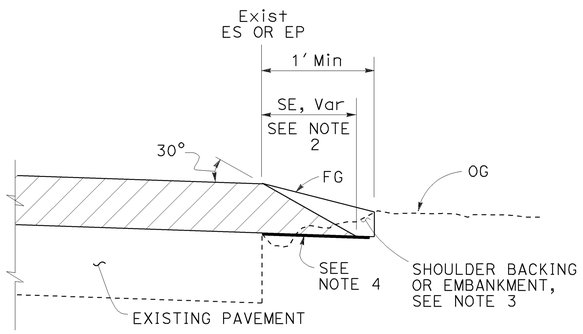

CASE C
Safety Edge

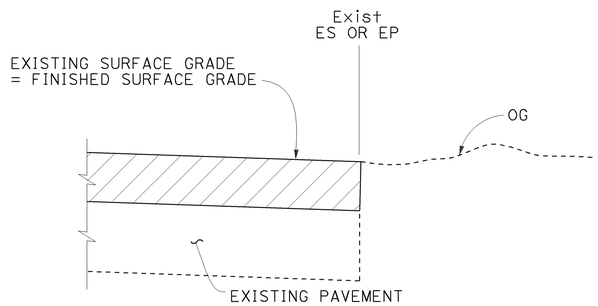

CASE D
Vertical Edge

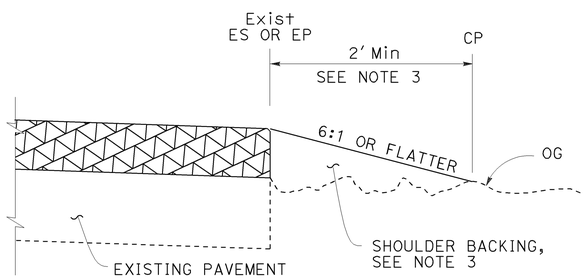

CASE E
Vertical Edge

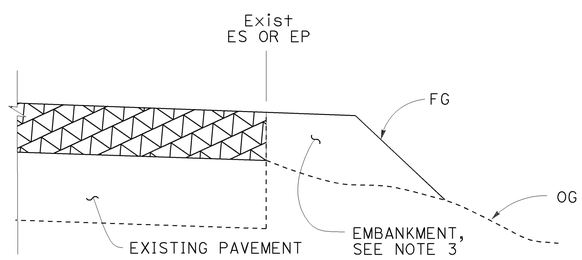

CASE F
Vertical Edge
* See Table A and Revised Std Plan RSP P74

LEGEND:

- HMA OVERLAY
- HMA OR CONCRETE OVERLAY
- CONCRETE OVERLAY

ABBREVIATIONS:

SE SAFETY EDGE
TT TOTAL THICKNESS OF SE

TABLE A
EDGE TREATMENT FOR VARIOUS OVERLAY THICKNESS AND CONDITIONS

	OVERLAY THICKNESS	
FIELD CONDITION	LESS THAN 0.15'	0.15' OR MORE
Exist SLOPE 6:1 OR FLATTER	CASE E	CASE A
Exist SLOPE 3:1 TO 6:1	CASE E	CASE B
Exist SLOPE STEEPER THAN 3:1	CASE F	CASE F
CUT SECTION (REPLACE, COLD PLANE, MILL PAVEMENT)	CASE D	CASE C

ADDITIONAL HMA OR CONCRETE QUANTITIES FOR SE/SIDE/MILE

TYPICAL CROSS SECTION	TT	TOTAL ADDITIONAL MATERIAL FOR SE/SIDE/MILE		
		HMA (TON)	CONCRETE (CY)*	CONCRETE (CY)**
TT	0.15'	NA	NA	NA
	0.20'	13.7	NA	NA
	0.30'	30.9	NA	NA
	0.40'	54.9	NA	NA
	0.45'	69.4	NA	NA
TT 0.43'	0.50'	84.2	NA	NA
	0.60'	113.9	NA	NA
	0.70'	143.6	70.9	94.2
	0.80'	173.3	85.6	112.2
	0.90'	203.0	100.3	130.2
	1.00'	232.7	114.9	148.2
	1.10'	262.4	129.6	166.2
	1.20'	292.1	144.3	184.2

* For Detail "A"
** For Optional Detail "A"

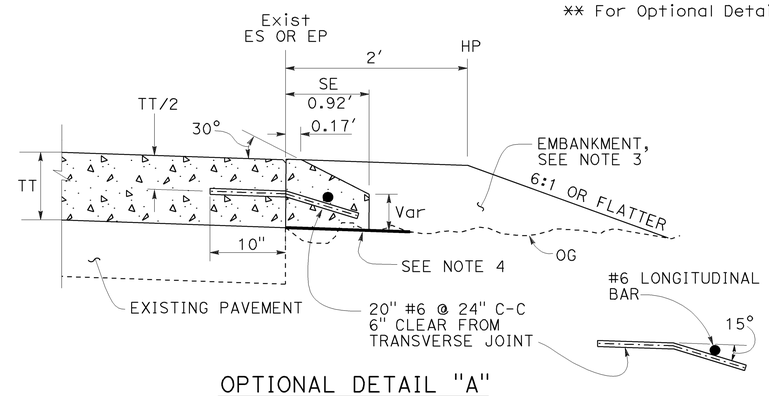

OPTIONAL DETAIL "A"
For concrete overlay
See Note 5

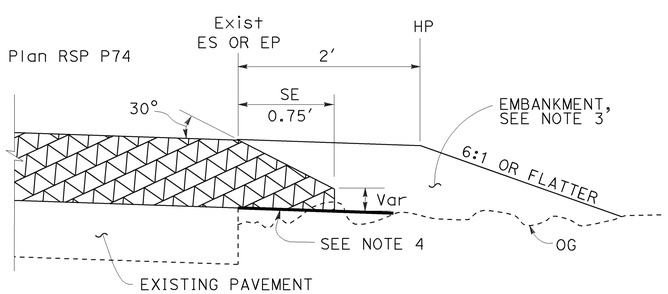

DETAIL "A"
For HMA overlay thickness more than 0.43' or concrete overlay

NOTES:

1. For limits of safety edge and vertical edge treatments, see Revised Standard Plan RSP P74.
2. Details shown for HMA overlay thickness less than 0.43'. See Detail "A" for HMA overlay thickness more than 0.43' or concrete overlay.
3. For locations and limits of shoulder backing or embankment see project plans.
4. Grade existing ground to place safety edge. 1' minimum width
5. Safety edge transverse joint must match overlay transverse joint. End of #6 longitudinal bar must be 2" ±½" clear from transverse joint.
6. Safety edge is not needed in the area of MGS, barrier, right turn lane and acceleration lane. See Revised Standard Plan RSP P74.

STATE OF CALIFORNIA
DEPARTMENT OF TRANSPORTATION

PAVEMENT EDGE TREATMENTS-OVERLAYS

NO SCALE

RSP P75 DATED NOVEMBER 15, 2013 SUPERSEDES RSP P75 DATED JANUARY 20, 2012 THAT SUPPLEMENTS THE STANDARD PLANS BOOK DATED 2010.

REVISED STANDARD PLAN RSP P75

2010 REVISED STANDARD PLAN RSP P75

10-4-13

DIST	COUNTY	ROUTE	POST MILES TOTAL PROJECT	SHEET No.	TOTAL SHEETS
12	Ora	73,133	16.6,4.2	71	107

REGISTERED CIVIL ENGINEER

November 15, 2013
PLANS APPROVAL DATE

REGISTERED PROFESSIONAL ENGINEER
Cornelis M. Hakim
No. C55610
Exp. 12-31-14
CIVIL
STATE OF CALIFORNIA

THE STATE OF CALIFORNIA OR ITS OFFICERS OR AGENTS SHALL NOT BE RESPONSIBLE FOR THE ACCURACY OR COMPLETENESS OF SCANNED COPIES OF THIS PLAN SHEET.

TO ACCOMPANY PLANS DATED 06-01-15

LEGEND:

- HMA PAVEMENT
- HMA OR CONCRETE PAVEMENT
- CONCRETE PAVEMENT

ABBREVIATIONS:

SE SAFETY EDGE
TT TOTAL THICKNESS OF SE
HW HINGE WIDTH, DISTANCE FROM ES OR EP TO HP

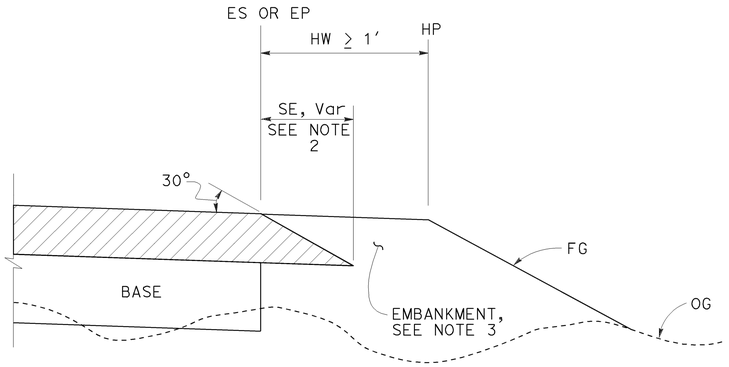

CASE K
Safety Edge - Fill Section, HW ≥ 1′

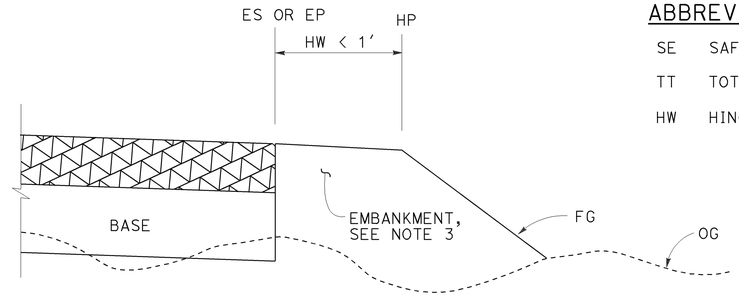

CASE L
Vertical Edge - Fill Section, HW < 1′

FILL SECTION

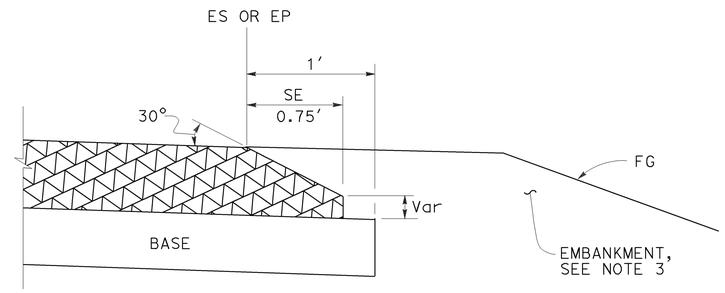

DETAIL "B"
For HMA pavement thickness more than 0.43′ or concrete pavement

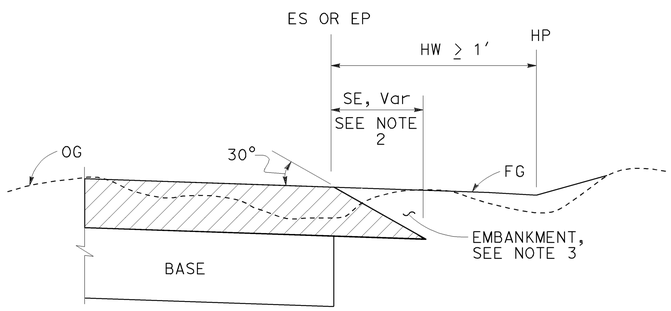

CASE M
Safety Edge - Cut Section, HW ≥ 1′

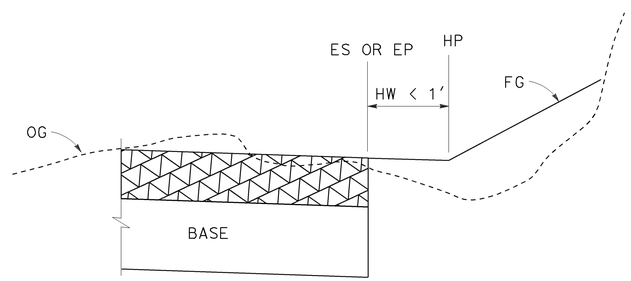

CASE N
Vertical Edge - Cut Section, HW < 1′

CUT SECTION

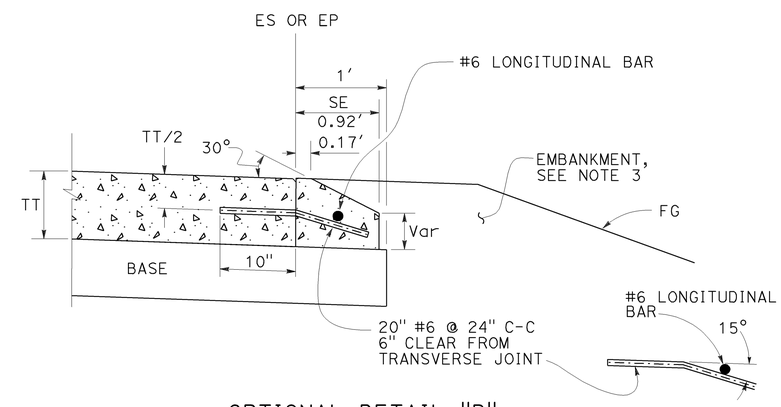

OPTIONAL DETAIL "B"
For concrete pavement
See Note 4

NOTES:

1. For limits of safety edge and vertical edge treatments, see Revised Standard Plan RSP P74
2. Details shown for HMA pavement thickness less than 0.43′. See Detail "B" for HMA pavement thickness more than 0.43′ or concrete pavement.
3. For locations and limits of embankment see project plans.
4. Safety edge transverse joint must match pavement transverse joint. End of #6 longitudinal bar must be 2" ±½" clear from transverse joint.
5. Safety edge is not needed in the area of MGS, barrier, right turn lane and acceleration lane. See Revised Standard Plan RSP P74.

STATE OF CALIFORNIA
DEPARTMENT OF TRANSPORTATION

PAVEMENT EDGE TREATMENTS-NEW CONSTRUCTION

NO SCALE

RSP P76 DATED NOVEMBER 15, 2013 SUPERSEDES RSP P76 DATED JANUARY 20, 2012 THAT SUPPLEMENTS THE STANDARD PLANS BOOK DATED 2010.

REVISED STANDARD PLAN RSP P76

2010 REVISED STANDARD PLAN RSP P76

10-4-13

TO ACCOMPANY PLANS DATED 06-01-15

Dist	COUNTY	ROUTE	POST MILES TOTAL PROJECT	SHEET No.	TOTAL SHEETS
12	Ora	73,133	16.6,4.2	72	107

REGISTERED CIVIL ENGINEER

October 19, 2012
PLANS APPROVAL DATE

REGISTERED PROFESSIONAL ENGINEER Glenn DeCou No. C34547 Exp. 9-30-13 CIVIL STATE OF CALIFORNIA

THE STATE OF CALIFORNIA OR ITS OFFICERS OR AGENTS SHALL NOT BE RESPONSIBLE FOR THE ACCURACY OR COMPLETENESS OF SCANNED COPIES OF THIS PLAN SHEET.

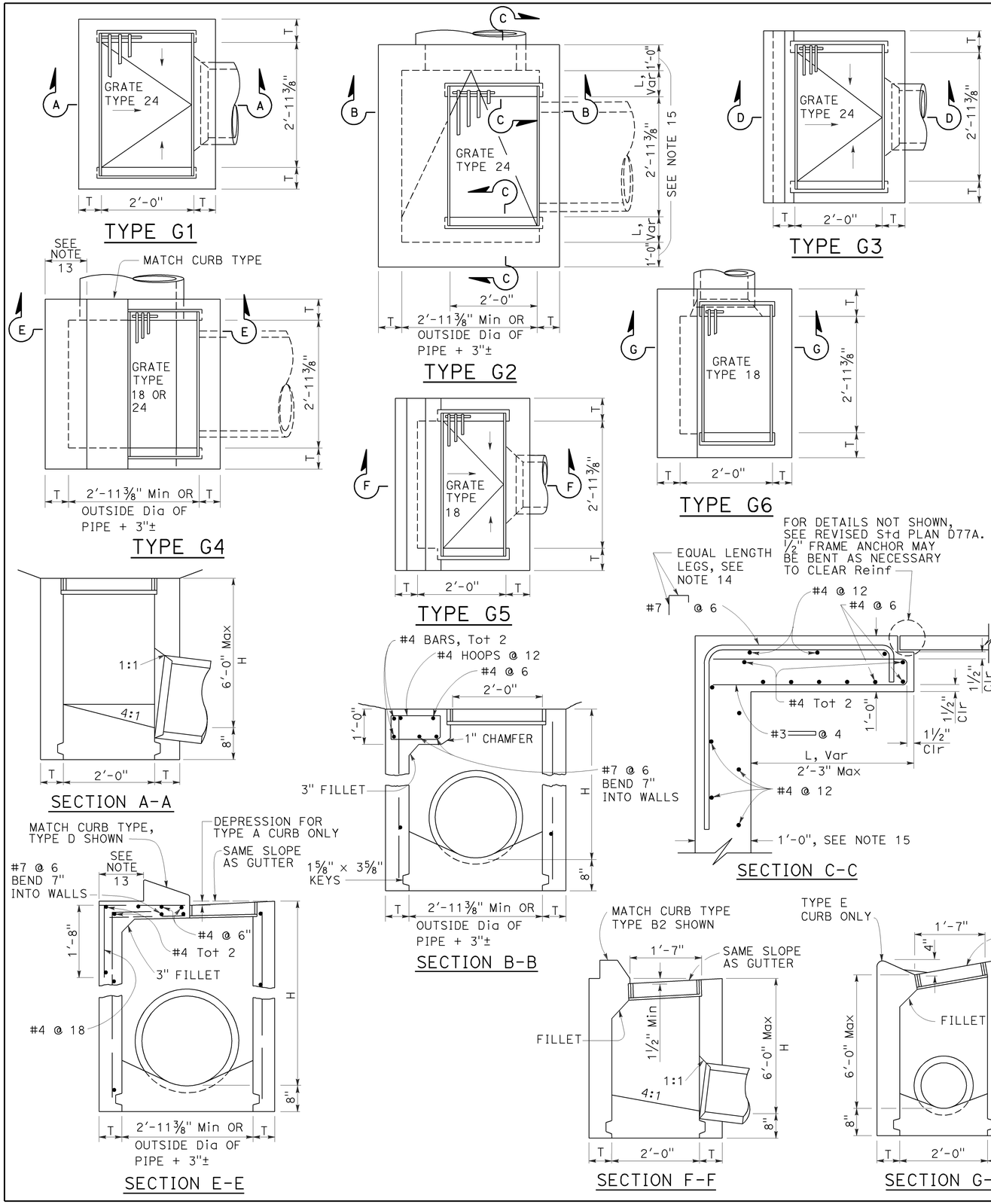

NOTES:

1. "H" is the difference in elevation between the outlet pipe flow line and the normal gutter grade line undepressed.
2. For "T" wall thickness, see Table A below.
3. Wall reinforcing not required when "H" is 8'-0" or less and the unsupported width or length is 7'-0" or less. Walls exceeding these limits shall be reinforced with #4 bars @ 1'-6" ± centers placed 1½" clear to inside of box unless otherwise shown.
4. Inlet bottom reinforcing not required. See Standard Plan D74C for alternative reinforced bottom and alternative half round bottom.
5. Steps-None required where "H" is less than 2'-6". Where "H" is 2'-6" or more, install steps with lowest rung 1'-0" above the floor and highest rung not more than 6" below top of inlet. The distance between steps shall not exceed 1'-0" and shall be uniform throughout the length of the wall. Place steps in the wall without an opening. Steps inserts may be substituted for the bar steps. Step inserts shall comply with State Industrial Safety requirements. See Standard Plan D74C for step details.
6. Details shown apply to both metal and concrete pipe.
7. Pipe(s) can be placed in any wall.
8. Curb section shall match adjacent curb.
9. Basin floors shall have wood trowel finish and a minimum slope of 12:3 from all directions toward outlet pipe.
10. Set inlet so that grate bars are parallel to direction of principal surface flow.
11. See Revised Standard Plans D77A and D77B for grate and frame details and weights of miscellaneous iron and steel.
12. See Standard Plan D78A for gutter depression details.
13. This dimenison will vary with different grates, curbs types, box width and wall thickness.
14. Bar may be rotated as necessary to clear opening. Where "L" is 6" or less, bar may be omitted.
15. Where "L" is 6" or less, wall thickness shall be as shown in Table A.
16. Cast-in-place inlets to be formed around all pipes/stubs intersecting the inlet, and concrete poured in one continuous operation. Precast inlets shall have mortared connections conforming to details for Type GCP Inlet shown on Standard Plan D75B. See Standard Specifications for mortar composition.

TABLE A

CONCRETE QUANTITIES				
TYPE	H=3'-0" TO 8'-0" (T=6")		H=8'-1" TO 20'-0" (T=8")	
	H=3'-0" (CY)	ADDITIONAL PCC PER FOOT (CY)	H=8'-1" (CY)	ADDITIONAL PCC PER FOOT (CY)
G-1	0.95	0.220	See Note A	SEE NOTE A
G-2*	1.31	0.255	3.50	0.357
G-3	1.03	0.220	See Note A	SEE NOTE A
G-4* (TYPE 24)	1.27	0.255	3.48	0.357
G-4* (TYPE 18)	1.30	0.255	3.50	0.357
G-5	1.02	0.220	SEE NOTE A	SEE NOTE A
G-6	1.04	0.220	SEE NOTE A	SEE NOTE A

TABLE BASED ON 8" FLOOR SLAB. NO DEDUCTIONS ARE TO BE MADE TO THESE QUANTITIES BECAUSE OF PIPE OPENINGS, DIFFERENT FLOOR ALTERNATIVES OR DIFFERENT CURB TYPES. * QUANTITIES FOR TYPE G-2 AND G-4 INLETS BASED ON THE MINIMUM INTERIOR DIMENSIONS.

NOTE A:

Maximum allowable height 6'-0".

STATE OF CALIFORNIA
DEPARTMENT OF TRANSPORTATION

DRAINAGE INLETS

NO SCALE

RSP D73 DATED OCTOBER 19, 2012 SUPERSEDES STANDARD PLAN D73 DATED MAY 20, 2011 - PAGE 156 OF THE STANDARD PLANS BOOK DATED 2010.

REVISED STANDARD PLAN RSP D73

2010 REVISED STANDARD PLAN RSP D73

7-19-12

Dist	COUNTY	ROUTE	POST MILES TOTAL PROJECT	SHEET No.	TOTAL SHEETS
12	Ora	73,133	16.6,4.2	73	107

REGISTERED CIVIL ENGINEER

April 19, 2013
PLANS APPROVAL DATE

REGISTERED PROFESSIONAL ENGINEER Raymond Don Tsztoo No. C37332 Exp. 6-30-14 CIVIL STATE OF CALIFORNIA

THE STATE OF CALIFORNIA OR ITS OFFICERS OR AGENTS SHALL NOT BE RESPONSIBLE FOR THE ACCURACY OR COMPLETENESS OF SCANNED COPIES OF THIS PLAN SHEET.

TO ACCOMPANY PLANS DATED 06-01-15

2010 REVISED STANDARD PLAN RSP D77A

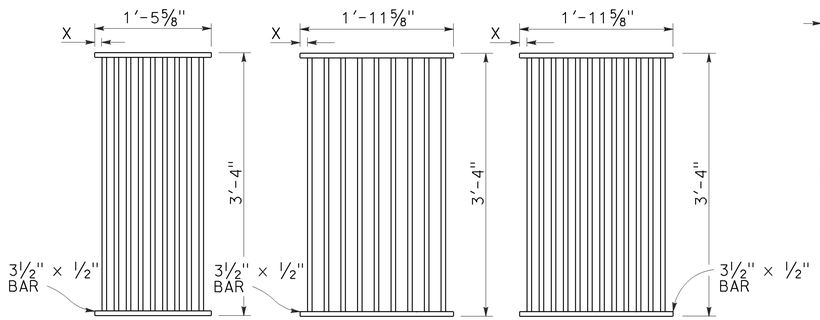

TYPE 18-9

1⅜" Clear spacing. Use within the roadbed on highways where bicycles and pedestrians are excluded.

TYPE 24-9

2" Clear spacing. Use in locations off the roadbed on all types of highways.

TYPE 24-12

1⅜" Clear spacing. Use within the roadbed on highways where bicycles and pedestrians are excluded.

RECTANGULAR GRATE DETAILS

(See table below)

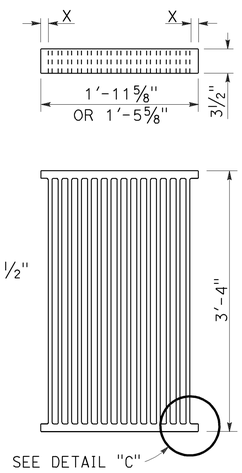

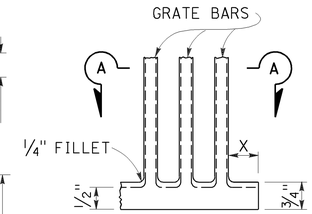

DETAIL "C"

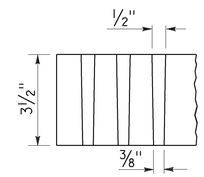

SECTION A-A

ALTERNATIVE CAST DUCTILE IRON GRATE OR CAST CARBON STEEL GRATE

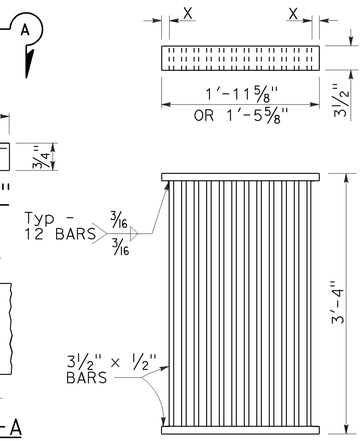

ALTERNATIVE WELDED GRATE

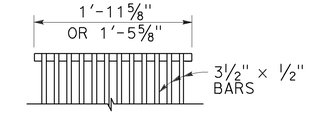

CAST END BLOCK

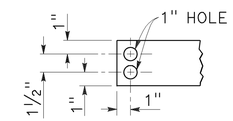

END OF BAR

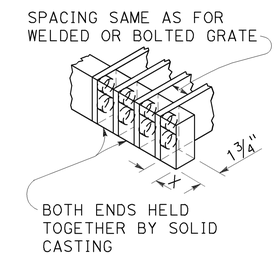

ALTERNATIVE CAST DUCTILE IRON OR CAST CARBON STEEL END BLOCK GRATE

NOTES:

1. Grate type numbers refer to approximate width of grate in inches and number of bars, respectively.
2. Contractor has the option of using cast ductile iron, cast carbon steel, welded, bolted, or cast end block grate.
3. Rounded top of bars optional on all grates.
4. Pipe inlets with a grate shall be placed so that bars parallel direction of principle surface flow.
5. Complete joint penetration butt welds may be substituted for the fillet welds on all anchors.
6. Standard square, hexagon, round or equivalent headed anchors may be substituted for the right angle hooks on the anchors shown on this plan.
7. Grate and frame weights are based on welded grates (weights of face angles, steps, protection bars, etc. are not included).
8. Connect chain to grate and frame only at locations shown on the plans. When chain is required, do not use cast ductile iron grates.

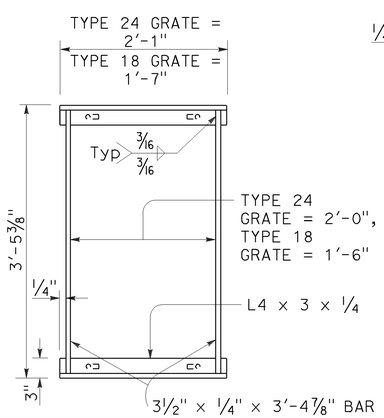

TYPICAL FRAME

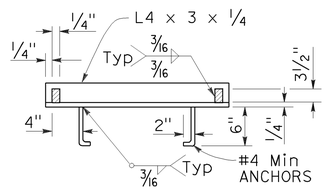

CROSS SECTION

(Thru frame)

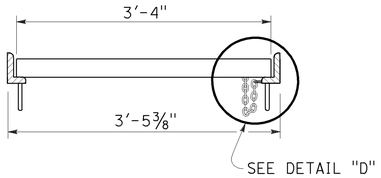

LONGITUDINAL SECTION

(Thru frame and grate)

RECTANGULAR FRAME DETAILS

(For all rectangular grates)

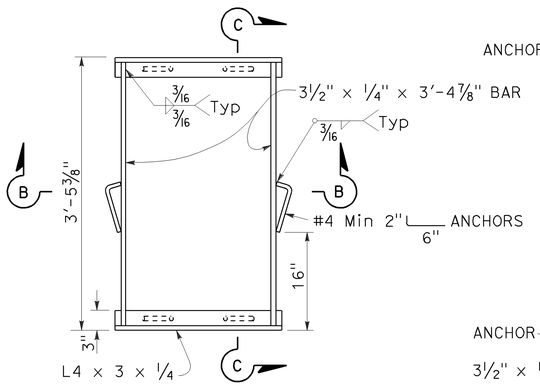

TYPICAL FRAME

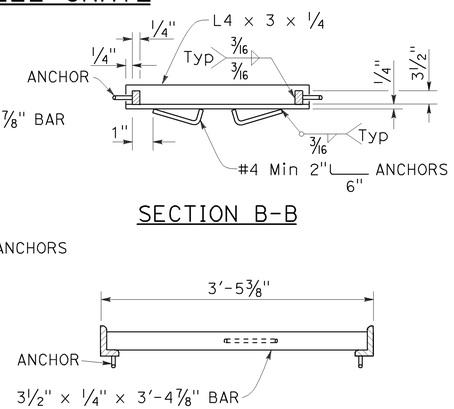

SECTION B-B

SECTION C-C

ALTERNATIVE ANCHOR FOR RECTANGULAR FRAME

(For details not shown, See Rectangular Frame Details)

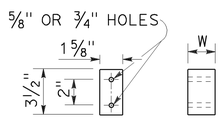

BAR SPACER

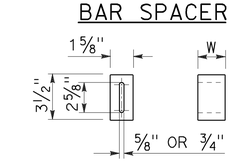

ALTERNATIVE SPACER

W = 1⅜" or 2"

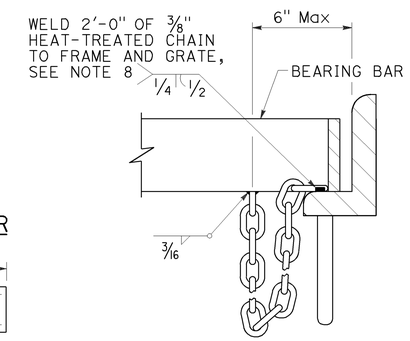

DETAIL "D"

(Steel grates only)

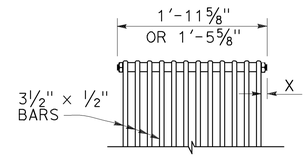

BOLTED END BLOCK

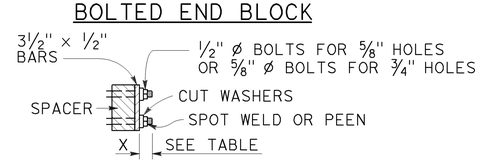

BOLTING DETAIL

ALTERNATIVE BOLTED GRATE

GRATE BAR SPACING TABLE

TYPE	No. OF BARS	CLEAR BAR SPACING	X
18-9	9	1⅜"	1 1/16"
24-9	9	2"	1 9/16"
24-12	12	1⅜"	1¼"

INLET TYPE	COVER TYPE	WEIGHT LB
OS	PLATE	174
OL-7	PLATE	170
OL-10	PLATE	170
OL-14	PLATE	170
OL-21	PLATE	170
OCP	PLATE	112
OCPI	PLATE	112
OCPI	REDWOOD	42
OMP	PLATE	177
OMPI	PLATE	177

INLET TYPE	GRATE TYPE	No. OF GRATES	WEIGHT LB
GDO	24-12	2	634
GOL-7	24-12	1	326
GOL-10	24-12	1	326
GO,G1,G2,G3,G4 (TYPE 24)	24-9	1	263
	24-12	1	326
G4 (TYPE 18),G5,G6	18-9	1	249
GT1	18-9	2	498
GT2	18-9	2	498
GT3	24-12	2	652
GT4	24-12	2	652
TRASH RACK			22
GRATE CHAIN			3

BASIS FOR Misc IRON & STEEL FINAL PAY WEIGHTS FOR DRAINAGE INLETS

(See Note 7)

STATE OF CALIFORNIA
DEPARTMENT OF TRANSPORTATION

GRATE DETAILS No. 1

NO SCALE

RSP D77A DATED APRIL 19, 2013 SUPERSEDES RSP D77A DATED JULY 20, 2012 AND STANDARD PLAN D77A DATED MAY 20, 2011 - PAGE 164 OF THE STANDARD PLANS BOOK DATED 2010.

REVISED STANDARD PLAN RSP D77A

4-4-13

Dist	COUNTY	ROUTE	POST MILES TOTAL PROJECT	SHEET No.	TOTAL SHEETS
12	Ora	73,133	16.6,4.2	74	107

Raymond Don Tsztoo
REGISTERED CIVIL ENGINEER

April 19, 2013
PLANS APPROVAL DATE

REGISTERED PROFESSIONAL ENGINEER
Raymond Don Tsztoo
No. C37332
Exp. 6-30-14
CIVIL
STATE OF CALIFORNIA

THE STATE OF CALIFORNIA OR ITS OFFICERS OR AGENTS SHALL NOT BE RESPONSIBLE FOR THE ACCURACY OR COMPLETENESS OF SCANNED COPIES OF THIS PLAN SHEET.

TO ACCOMPANY PLANS DATED **06-01-15**

2010 REVISED STANDARD PLAN RSP D77B

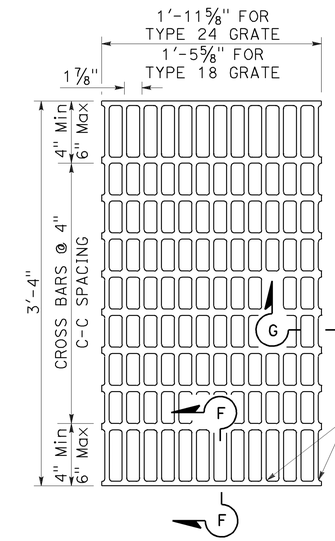

NOTES:

Bearing bars to be 3½" × ¼" bars on 1⅞" centers.

⅜"± ø Cross bars may be fillet welded, resistance welded or electroforged to bearing bars.

Weight of Type 24 grate = 141 LBS.

Weight of Type 18 grate = 107 LBS. (Type 24 grate shown).

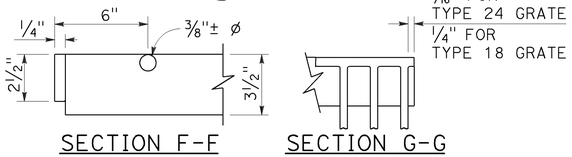

SECTION F-F SECTION G-G

TYPE 18-10 AND 24-13 GRATE

(Welded Steel)

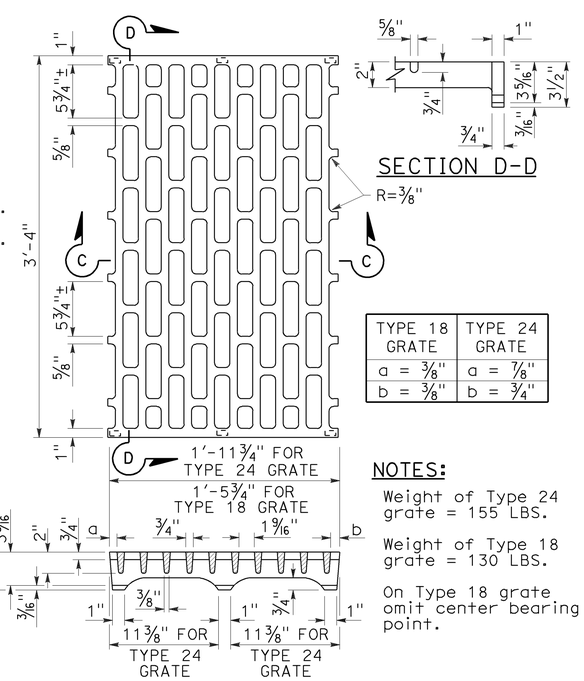

TYPE 18 GRATE	TYPE 24 GRATE
a = ⅜"	a = ⅞"
b = ⅜"	b = ¾"

NOTES:

Weight of Type 24 grate = 155 LBS.

Weight of Type 18 grate = 130 LBS.

On Type 18 grate omit center bearing point.

SECTION C-C

TYPE 18-8C AND 24-10C GRATE

(Cast ductile iron)

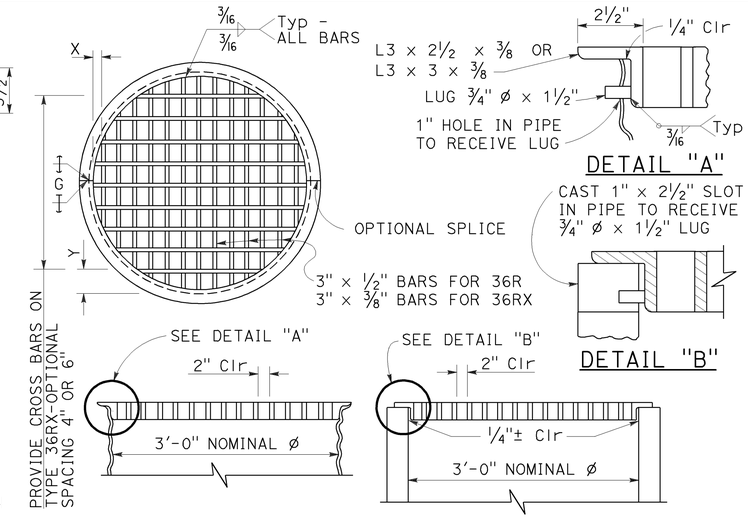

DETAIL "A"

DETAIL "B"

TYPE 36R AND 36RX GRATE DETAILS

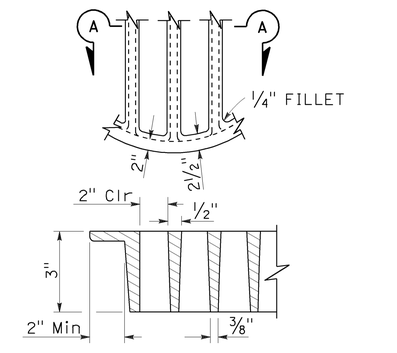

SECTION A-A

ALTERNATIVE CAST DUCTILE IRON GRATE OR CAST CARBON STEEL GRATE TYPE 36R AND 36RX

BASIS FOR Misc IRON AND STEEL FINAL PAY WEIGHTS FOR DRAINAGE INLETS

INLET TYPE	GRATE TYPE	No. OF GRATES	WEIGHT LB
GDO (SEE NOTE 4)	24-10C	2	391
	24-10S	2	456
	24-12X	2	473
	24-13	2	374
GO,GOL,G1,G2, G3,G4 (TYPE 24)	24-10C	1	202
	24-10S	1	229
	24-12X	1	239
	24-13	1	188
G4 (TYPE 18) G5,G6	18-8S	1	187
	18-9X	1	187
	18-10	1	149
GT1,GT2	18-8S	2	374
	18-9X	2	374
	18-10	2	298
GT3,GT4	24-10C	2	404
	24-10S	2	458
	24-12X	2	478
	24-13	2	376
ODI	36RX (Mod)	1	196
GMP,GCP,GCPI	36RX	1	215
ODI	36R (Mod)	1	220
GMP,GCP,GCPI	36R	1	236
TRASH RACK			22
GRATE CHAIN			3

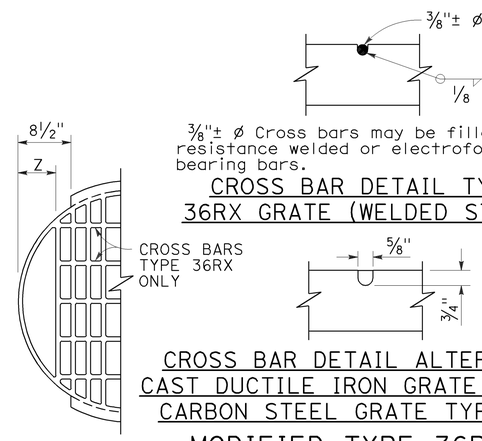

CROSS BAR DETAIL TYPE 36RX GRATE (WELDED STEEL)

CROSS BAR DETAIL ALTERNATIVE CAST DUCTILE IRON GRATE OR CAST CARBON STEEL GRATE TYPE 36RX

MODIFIED TYPE 36R AND 36RX GRATE FOR ODI INLET

NOTES:

1. When alternative grates are allowed - Final pay based on alternative with the lesser weight.
2. Use frame shown on Standard Plan D74A, D74B or RSP D77A as appropriate.
3. When Type 24-10S, 24-12X or 24-13 grates are used with GDO Inlets, a ¼" × 3½" × 3'-4⅞" steel bar shall be welded across the center of inlet frame to separate the individual grates.
4. See Revised Standard Plan RSP D77A for connecting chain to welded grate and frame. When chain is required, do not use cast ductile iron grate.

GRATE BAR SPACING TABLE

TYPE	No. OF BARS	CLEAR BAR SPACING	X	Y 4" SPACING	Y 6" SPACING	Z
36R	13	2"	2⅛"	-	-	-
36RX (STEEL)	15	2"	9/16"	3¾"	5¾"	-
36RX (CAST)	13	2"	2⅛"	3¾"	5¾"	-
36R Mod	12	2"	2⅛"	-	-	5"
36RX Mod (STEEL)	13	2"	9/16"	3¾"	5¾"	5 11/16"
36RX Mod (CAST)	12	2"	2⅛"	3¾"	5¾"	5"

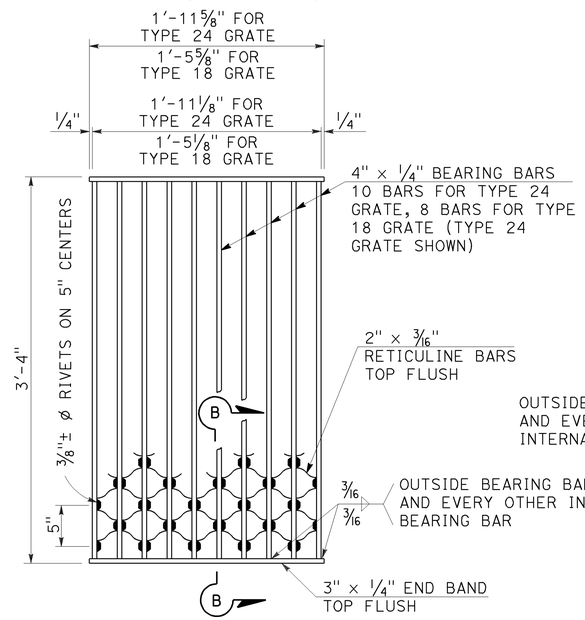

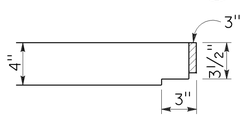

NOTES:

Weight of Type 24 grate = 182 LBS.
Weight of Type 18 grate = 145 LBS.

SECTION B-B

TYPE 18-8S AND 24-10S GRATE

(Welded Steel) Reticuline type

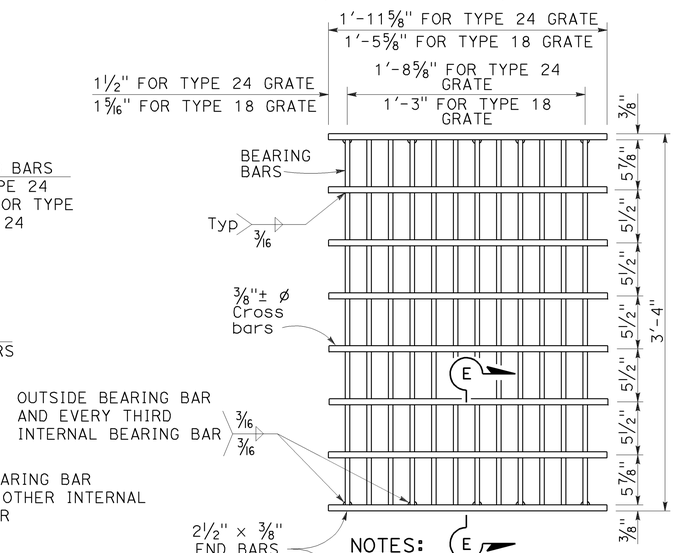

SECTION E-E

NOTES:

Bearing bars to be 3½" × ⅜" bars on 1⅞" centers.

12 Bars for Type 24 grate - 9 bars for Type 18 grates. (Type 24 grate shown).

Weight of Type 24 grate = 192 LBS.

Weight of Type 18 grate = 145 LBS.

⅜"± ø Cross bars may be fillet welded, resistance welded or electroforged to bearing bars.

TYPE 18-9X AND 24-12X GRATE

(Welded Steel)

STATE OF CALIFORNIA
DEPARTMENT OF TRANSPORTATION

GRATE DETAILS No. 2

NO SCALE

RSP D77B DATED APRIL 19, 2013 SUPERSEDES RSP D77B DATED JULY 20, 2012 AND STANDARD PLAN D77B DATED MAY 20, 2011 - PAGE 165 OF THE STANDARD PLANS BOOK DATED 2010.

REVISED STANDARD PLAN RSP D77B

4-4-13

Dist	COUNTY	ROUTE	POST MILES TOTAL PROJECT	SHEET No.	TOTAL SHEETS
12	Ora	73,133	16.6,4.2	75	107

LICENSED LANDSCAPE ARCHITECT

July 19, 2013
PLANS APPROVAL DATE

THE STATE OF CALIFORNIA OR ITS OFFICERS OR AGENTS SHALL NOT BE RESPONSIBLE FOR THE ACCURACY OR COMPLETENESS OF SCANNED COPIES OF THIS PLAN SHEET.

LICENSED LANDSCAPE ARCHITECT — Gregory A. Balzer — 2576 — 02-28-15 Renewal Date — 7-19-13 Date — STATE OF CALIFORNIA

TO ACCOMPANY PLANS DATED 06-01-15

2010 REVISED STANDARD PLAN RSP H1

A

AB	AGGREGATE BASE
ABS	ACRYLONITRILE-BUTADIENE-STYRENE
AC	ASPHALT CONCRETE
ACC	ARMOR-CLAD CONDUCTORS
Adj	ADJACENT/ADJUSTABLE
AIC	AUXILIARY IRRIGATION CONTROLLER
Alt	ALTERNATIVE
AMEND	AMENDMENT
ARV	AIR RELEASE VALVE
AUTO	AUTOMATIC
AUX	AUXILIARY
AVB	ATMOSPHERIC VACUUM BREAKER

B

B&B	BALLED AND BURLAPPED
B/B	BRASS/BRONZE
B/B/PL	BRASS/BRONZE/PLASTIC
B/PL	BRASS/PLASTIC
BFM	BONDED FIBER MATRIX
Bit Ctd	BITUMINOUS COATED
BP	BOOSTER PUMP
BPA	BACKFLOW PREVENTER ASSEMBLY
BPE	BACKFLOW PREVENTER ENCLOSURE
BV	BALL VALVE

C

C	CONDUIT
CAP	CORRUGATED ALUMINUM PIPE
CARV	COMBINATION AIR RELEASE VALVE
CB	COUPLING BAND
CCA	CAM COUPLER ASSEMBLY
CEC	CONTROLLER ENCLOSURE CABINET
CHDPE	CORRUGATED HIGH DENSITY POLYETHYLENE
CL	CHAIN LINK
CNC	CONTROL AND NEUTRAL CONDUCTORS
Conc	CONCRETE
CP	COPPER PIPE
CS	COMPOST SOCK
CSP	CORRUGATED STEEL PIPE
CST	CENTER STRIP
CV	CHECK VALVE

D

Dia	DIAMETER
DIP	DUCTILE IRON PIPE
DIT	DRIP IRRIGATION TUBING
DG	DECOMPOSED GRANITE
DN	DIAMETER NOMINAL
DVA	DRIP VALVE ASSEMBLY

E

EC	EROSION CONTROL
ECTC	EROSION CONTROL TECHNOLOGY COUNCIL
Elect	ELECTRIC/ELECTRICAL
Elev	ELEVATION
ELL	ELBOW
ENCL	ENCLOSURE
EP	EDGE OF PAVEMENT
ES	EDGE OF SHOULDER
EST	END STRIP
ESTB	ESTABLISHMENT
ETW	EDGE OF TRAVELED WAY

F

F	FULL CIRCLE
F/P	FULL/PART CIRCLE
FCV	FLOW CONTROL VALVE
FERT	FERTILIZER
FG	FINISHED GRADE
FH	FLEXIBLE HOSE
FIPT	FEMALE IRON PIPE THREAD
FIS	FERTILIZER INJECTOR SYSTEM
FL	FLOW LINE
FR	FIBER ROLL
FS	FLOW SENSOR
FSC	FLOW SENSOR CABLE
FV	FLUSH VALVE

G

Galv	GALVANIZED
GARV	GARDEN VALVE
GARVA	GARDEN VALVE ASSEMBLY
GM	GRAVEL MULCH
GPH	GALLONS PER HOUR
GPM	GALLONS PER MINUTE
GSP	GALVANIZED STEEL PIPE
GV	GATE VALVE

H

H	HALF CIRCLE
HDPE	HIGH DENSITY POLYETHYLENE
HP	HORSEPOWER/HINGE POINT
HPL	HIGH PRESSURE LINE
Hwy	HIGHWAY

I

IC	IRRIGATION CONTROLLER
ICC	IRRIGATION CONTROLLER(S) IN CONTROLLER ENCLOSURE CABINET
ID	INSIDE DIAMETER
IFS	IRRIGATION FILTRATION SYSTEM
IPS	IRON PIPE SIZE
IPT	IRON PIPE THREAD
Irr	IRRIGATION

L

L	LENGTH

M

Max	MAXIMUM
MBGR	METAL BEAM GUARD RAILING
MCV	MANUAL CONTROL VALVE
MIC	MASTER IRRIGATION CONTROLLER
Min	MINIMUM
MIPT	MALE IRON PIPE THREAD
Misc	MISCELLANEOUS
Mtl	MATERIAL
MVP	MAINTENANCE VEHICLE PULLOUT

N

NCN	NO COMMON NAME
NL	NOZZLE LINE
No.	NUMBER
NPT	NATIONAL PIPE THREAD

O

O/C	ON CENTER
OD	OUTSIDE DIAMETER
OL	OVERLAP

P

P	PART CIRCLE
PB	PULL BOX
PCC	PORTLAND CEMENT CONCRETE
PE	POLYETHYLENE
Pkt	PACKET
PL	PLASTIC
PLS	PURE LIVE SEED
PLT	PLANT/PLANTING
PLT ESTB	PLANT ESTABLISHMENT
PM	POST MILE
PR	PRESSURE RATED
PRLV	PRESSURE RELIEF VALVE
PRV	PRESSURE REGULATING VALVE
PVC	POLYVINYL CHLORIDE
Pvmt	PAVEMENT

Q

Q	QUARTER CIRCLE
QCV	QUICK COUPLING VALVE

R

R	RADIUS
RCP	REINFORCED CONCRETE PIPE
RCV	REMOTE CONTROL VALVE
RCVM	REMOTE CONTROL VALVE (MASTER)
RCVMF	REMOTE CONTROL VALVE (MASTER) W/FLOW SENSOR
RCVP	REMOTE CONTROL VALVE W/PRESSURE REGULATOR
RCW	RECYCLED WATER
RECP	ROLLED EROSION CONTROL PRODUCT
REQ	REQUIRED
RICS	REMOTE IRRIGATION CONTROL SYSTEM
R/W	RIGHT OF WAY

S

S	SLIP
SCH	SCHEDULE
SF	STATE-FURNISHED
Shld	SHOULDER
Sq	SQUARE
SST	SIDE STRIP
Sta	STATION
Std	STANDARD
SW	SIDEWALK/SOUND WALL

T

T	THIRD CIRCLE/THREAD
TLS	TRUCK LOADING STANDPIPE
TQ	THREE QUARTER CIRCLE
TRM	TURF REINFORCEMENT MAT
TT	TWO-THIRDS CIRCLE
TWSA	TREE WELL SPRINKLER ASSEMBLY
Typ	TYPICAL

U

UG	UNDERGROUND

W

W	WIDTH
W/	WITH
WM	WATER METER
WS	WYE STRAINER
WSA	WYE STRAINER ASSEMBLY
WSP	WELDED STEEL PIPE
WWM	WELDED WIRE MESH

NOTE:
For additional abbreviations, see Standard Plans A10A and A10B.

STATE OF CALIFORNIA
DEPARTMENT OF TRANSPORTATION

LANDSCAPE AND EROSION CONTROL ABBREVIATIONS

NO SCALE

RSP H1 DATED JULY 19, 2013 SUPERSEDES STANDARD PLAN H1 DATED MAY 20, 2011 - PAGE 218 OF THE STANDARD PLANS BOOK DATED 2010.

REVISED STANDARD PLAN RSP H1

Dist	COUNTY	ROUTE	POST MILES TOTAL PROJECT	SHEET No.	TOTAL SHEETS
12	Ora	73,133	16.6,4.2	76	107

LICENSED LANDSCAPE ARCHITECT

November 15, 2013
PLANS APPROVAL DATE

LICENSED LANDSCAPE ARCHITECT
Gregory A. Balzer 2576
02-28-14
Renewal Date
11-15-13
Date
STATE OF CALIFORNIA

THE STATE OF CALIFORNIA OR ITS OFFICERS OR AGENTS SHALL NOT BE RESPONSIBLE FOR THE ACCURACY OR COMPLETENESS OF SCANNED COPIES OF THIS PLAN SHEET.

TO ACCOMPANY PLANS DATED 06-01-15

2010 REVISED STANDARD PLAN RSP H2

EXISTING	NEW	ITEM DESCRIPTION
		WATER METER (WM)
		BACKFLOW PREVENTER ASSEMBLY (BPA)
		BACKFLOW PREVENTER ENCLOSURE (BPE)
		BOOSTER PUMP (BP)
		TRUCK LOADING STANDPIPE (TLS)
	FS	FLOW SENSOR (FS)
		MASTER IRRIGATION CONTROLLER (MIC)
		AUXILIARY IRRIGATION CONTROLLER (AIC)
		IRRIGATION CONTROLLER (IC) IRRIGATION CONTROLLER (IC) (BATTERY) IRRIGATION CONTROLLER (IC) (SOLAR) IRRIGATION CONTROLLER (IC) (TWO WIRE) IRRIGATION CONTROLLER(S) IN CONTROLLER ENCLOSURE CABINET (ICC)
acc	ACC	ARMOR-CLAD CONDUCTORS (ACC)
cnc	CNC	CONTROL AND NEUTRAL CONDUCTORS (CNC)
		IRRIGATION CONDUIT
		EXTEND IRRIGATION CONDUIT
dip	DIP	DUCTILE IRON PIPE (SUPPLY LINE) (MAIN) (DIP)
		GALVANIZED STEEL PIPE (SUPPLY LINE) (MAIN) (GSP)
		GALVANIZED STEEL PIPE (SUPPLY LINE) (LATERAL) (GSP)
		PLASTIC PIPE (SUPPLY LINE) (MAIN)
		PLASTIC PIPE (SUPPLY LINE) (LATERAL)
cp	CP	COPPER PIPE (SUPPLY LINE)
dit	DIT	DRIP IRRIGATION TUBING
		REMOTE CONTROL VALVE (RCV) REMOTE CONTROL VALVE (MASTER) (RCVM) REMOTE CONTROL VALVE (MASTER) W/FLOW METER (RCVMF)
P	P	REMOTE CONTROL VALVE W/PRESSURE REGULATOR (RCVP)
		EXISTING MANUAL CONTROL VALVE (MCV)
	V	DRIP VALVE ASSEMBLY (DVA)
	Y	WYE STRAINER ASSEMBLY (WSA)

EXISTING	NEW	ITEM DESCRIPTION
		GATE VALVE (GV)
		BALL VALVE (BV)
		QUICK COUPLING VALVE (QCV)
		CAM COUPLER ASSEMBLY (CCA)
		GARDEN VALVE ASSEMBLY (GARVA)
		PRESSURE REGULATING VALVE (PRV)
		PRESSURE RELIEF VALVE (PRLV)
		FLOW CONTROL VALVE (FCV)
		COMBINATION AIR RELEASE VALVE (CARV)
		CHECK VALVE (CV)
		FLUSH VALVE (FV)
		EXISTING NOZZLE LINE W/TURNING UNION
		EXISTING IRRIGATION SYSTEM
		EXISTING IRRIGATION SYSTEM TO BE REMOVED
		CHAIN LINK GATE
		QUICK COUPLING VALVE W/SPRINKLER PROTECTOR
3	3	SPRINKLER W/SPRINKLER PROTECTOR
	C	CONNECT TO EXISTING SYSTEM
		CAP
		CAP EXISTING
	FR	FIBER ROLL
	CS	COMPOST SOCK

- RCV SIZE
- IRRIGATION CONTROLLER
- CONTROLLER STATION
- VALVE IN PARALLEL (IF APPLICABLE)
- GPM
- QUANTITY OF SPRINKLERS (WHEN SHOWN)

* 2½"-A-2b-40-60

VALVE CODE

* VALVE CODES FOR EXISTING VALVES ARE SHOWN IN A DASHED ENCLOSURE.

STATE OF CALIFORNIA
DEPARTMENT OF TRANSPORTATION

LANDSCAPE AND EROSION CONTROL SYMBOLS

NO SCALE

RSP H2 DATED NOVEMBER 15, 2013 SUPERSEDES RSP H2 DATED JULY 19, 2013 AND STANDARD PLAN H2 DATED MAY 20, 2011 - PAGE 219 OF THE STANDARD PLANS BOOK DATED 2010.

REVISED STANDARD PLAN RSP H2

10-9-13

Dist	COUNTY	ROUTE	POST MILES TOTAL PROJECT	SHEET No.	TOTAL SHEETS
12	Ora	73,133	16.6,4.2	77	107

REGISTERED CIVIL ENGINEER

July 19, 2013
PLANS APPROVAL DATE

REGISTERED PROFESSIONAL ENGINEER
Gurinderpal Bhullar
No. C48815
Exp. 9-30-14
CIVIL
STATE OF CALIFORNIA

THE STATE OF CALIFORNIA OR ITS OFFICERS OR AGENTS SHALL NOT BE RESPONSIBLE FOR THE ACCURACY OR COMPLETENESS OF SCANNED COPIES OF THIS PLAN SHEET.

TO ACCOMPANY PLANS DATED 06-01-15

TABLE 1

TAPER LENGTH CRITERIA AND CHANNELIZING DEVICE SPACING

SPEED (S)	MINIMUM TAPER LENGTH * FOR WIDTH OF OFFSET 12 FEET (W)				MAXIMUM CHANNELIZING DEVICE SPACING		
					X	Y	Z **
	TANGENT 2L	MERGING L	SHIFTING L/2	SHOULDER L/3	TAPER	TANGENT	CONFLICT
mph	ft	ft	ft	ft	ft	ft	ft
20	160	80	40	27	20	40	10
25	250	125	63	42	25	50	12
30	360	180	90	60	30	60	15
35	490	245	123	82	35	70	17
40	640	320	160	107	40	80	20
45	1080	540	270	180	45	90	22
50	1200	600	300	200	50	100	25
55	1320	660	330	220	55	110	27
60	1440	720	360	240	60	120	30
65	1560	780	390	260	65	130	32
70	1680	840	420	280	70	140	35

* - For other offsets, use the following merging taper length formula for L:
For speed of 40 mph or less, $L = WS^2/60$
For speed of 45 mph or more, $L = WS$

Where: L = Taper length in feet
W = Width of offset in feet
S = Posted speed limit, off-peak 85th-percentile speed prior to work starting, or the anticipated operating speed in mph

** - Use for taper and tangent sections where there are no pavement markings or where there is a conflict between existing pavement markings and channelizers (CA).

TABLE 2

LONGITUDINAL BUFFER SPACE AND FLAGGER STATION SPACING

SPEED *	Min D **	DOWNGRADE Min D ***		
		-3%	-6%	-9%
mph	ft	ft	ft	ft
20	115	116	120	126
25	155	158	165	173
30	200	205	215	227
35	250	257	271	287
40	305	315	333	354
45	360	378	400	427
50	425	446	474	507
55	495	520	553	593
60	570	598	638	686
65	645	682	728	785
70	730	771	825	891

* - Speed is posted speed limit, off-peak 85th-percentile speed prior to work starting, or the anticipated operating speed in mph

** - Longitudinal buffer space or flagger station spacing

*** - Use on sustained downgrade steeper than -3 percent and longer than 1 mile.

TABLE 3

ADVANCE WARNING SIGN SPACING

ROAD TYPE	DISTANCE BETWEEN SIGNS *		
	A	B	C
	ft	ft	ft
URBAN - 25 mph OR LESS	100	100	100
URBAN - MORE THAN 25 mph TO 40 mph	250	250	250
URBAN - MORE THAN 40 mph	350	350	350
RURAL	500	500	500
EXPRESSWAY / FREEWAY	1000	1500	2640

* - The distances are approximate, are intended for guidance purposes only, and should be applied with engineering judgment. These distances should be adjusted by the Engineer for field conditions, if necessary, by increasing or decreasing the recommmended distances.

STATE OF CALIFORNIA
DEPARTMENT OF TRANSPORTATION

TRAFFIC CONTROL SYSTEM TABLES FOR LANE AND RAMP CLOSURES

NO SCALE

RSP T9 DATED JULY 19, 2013 SUPERSEDES RSP T9 DATED APRIL 19, 2013 THAT SUPPLEMENTS THE STANDARD PLANS BOOK DATED 2010.

REVISED STANDARD PLAN RSP T9

2010 REVISED STANDARD PLAN RSP T9

4-30-13

TO ACCOMPANY PLANS DATED 06-01-15

Dist	COUNTY	ROUTE	POST MILES TOTAL PROJECT	SHEET No.	TOTAL SHEETS
12	Ora	73,133	16.6,4.2	78	107

REGISTERED CIVIL ENGINEER

April 19, 2013
PLANS APPROVAL DATE

REGISTERED PROFESSIONAL ENGINEER Gurinderpal Bhullar No. C48815 Exp. 9-30-14 CIVIL STATE OF CALIFORNIA

THE STATE OF CALIFORNIA OR ITS OFFICERS OR AGENTS SHALL NOT BE RESPONSIBLE FOR THE ACCURACY OR COMPLETENESS OF SCANNED COPIES OF THIS PLAN SHEET.

NOTES:

See Revised Standard Plan RSP T9 for tables.

Use cone spacing X for taper segment, Y for tangent segment or Z for conflict situations, as approriate, per Table 1, unless X, Y, or Z cone spacing is shown on this sheet.

Unless otherwise specified in the special provisions, all temporary warning signs shall have black legend on fluorescent orange background.

California codes are designated by (CA). Otherwise, Federal (MUTCD) codes are shown.

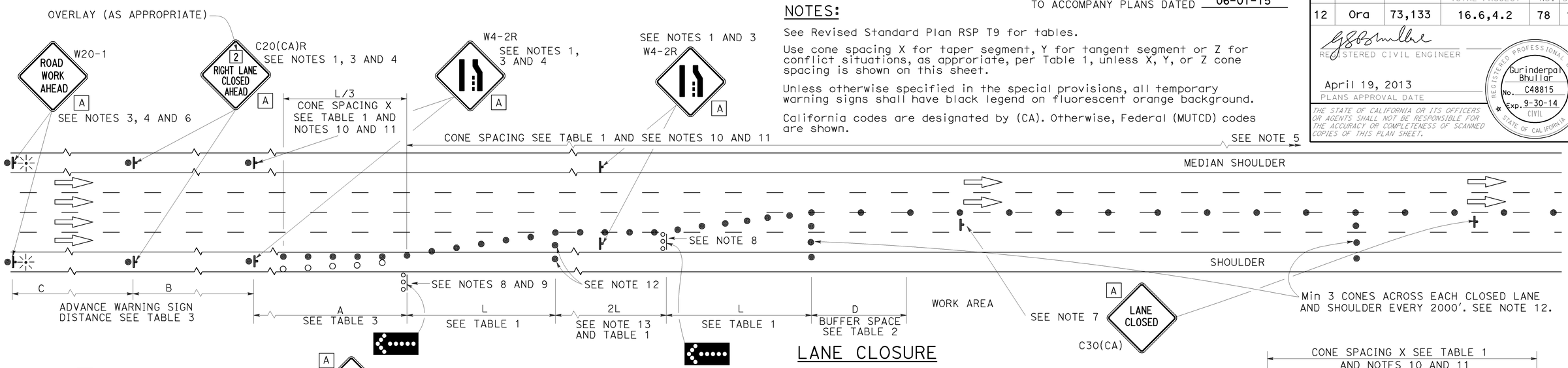

LANE CLOSURE

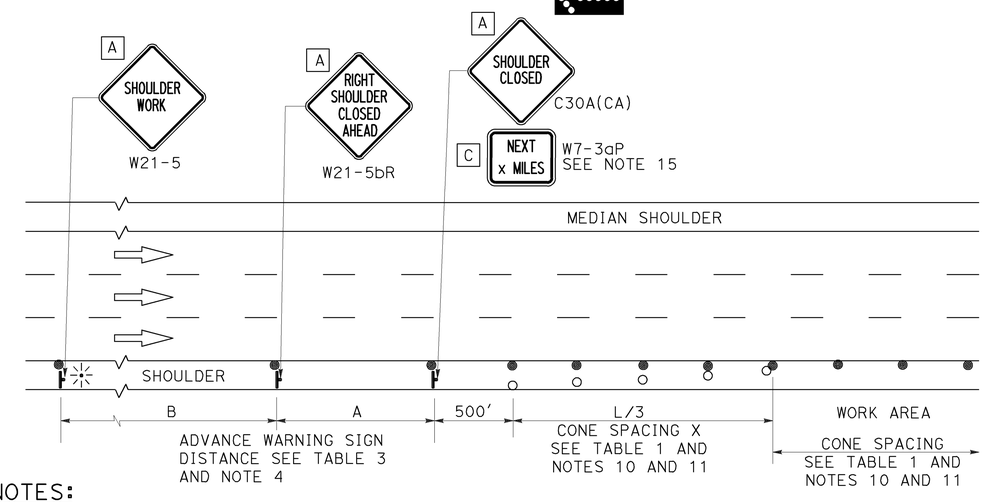

SHOULDER CLOSURE

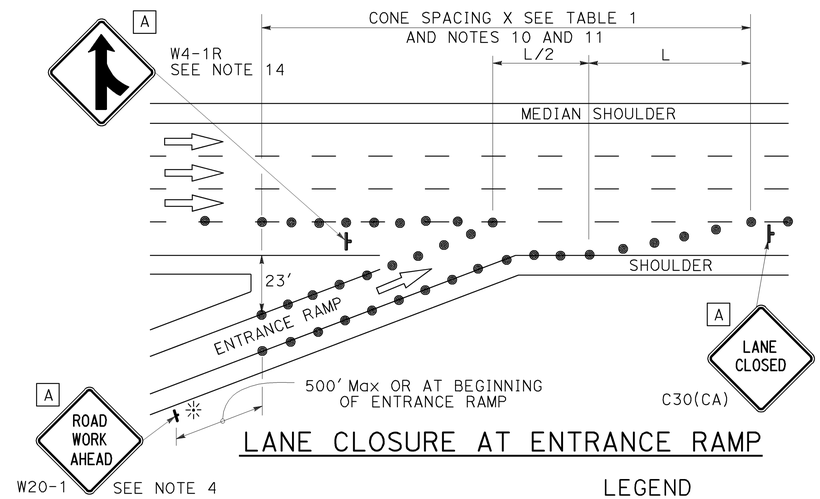

LANE CLOSURE AT ENTRANCE RAMP

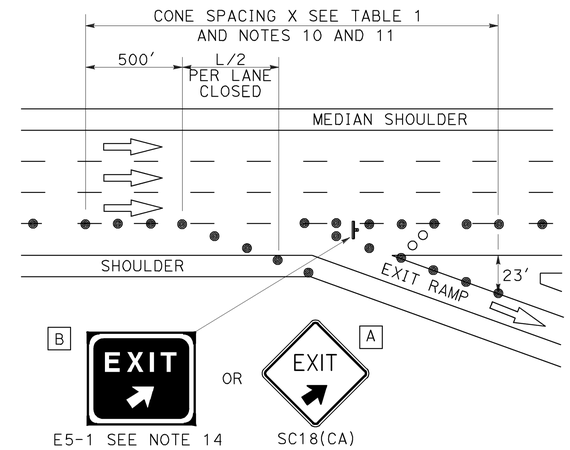

LANE CLOSURE AT EXIT RAMP

NOTES:

1. Median lane closures shall conform to the details as shown except that C20(CA)L and W4-2L signs shall be used.
2. At least one person shall be assigned to provide full time maintenance of traffic control devices for lane closures.
3. Duplicate sign installations are not required:
   a) On opposite shoulder if at least one-half of the available lanes remain open to traffic.
   b) In the median if the width of the median shoulder is less than 8' and the outside lanes are to be closed.
4. Each advance warning sign on each side of the roadway shall be equipped with at least two flags for daytime closure. Each flag shall be at least 16" x 16" in size and shall be orange or fluorescent red-orange in color. Flashing beacons shall be placed at the locations indicated for lane closure during hours of darkness.
5. A G20-2 "END ROAD WORK" sign, with minimum size of 48" x 24" as appropriate, shall be placed at the end of the lane closure unless the end of work area is obvious or ends within a larger project's limits.
6. If the W20-1 sign would follow within 2000' of a stationary W20-1 or G20-1 "ROAD WORK NEXT _____ MILES", use a C20(CA) sign for the first advance warning sign.
7. Place a C30(CA) sign every 2000' throughout length of lane closure.
8. One flashing arrow sign for each lane closed. The flashing arrow signs shall be Type I.
9. A minimum 1500' of sight distance shall be provided where possible for vehicles approaching the first flashing arrow sign. Lane closures shall not begin at top of crest vertical curve or on a horizontal curve.
10. All cones used for lane closures during the hours of darkness shall be fitted with retroreflective bands (or sleeves) as specified in the specifications.
11. Portable delineators, placed at one-half the spacing indicated for traffic cones may be used instead of cones for daytime closures only.
12. Unless otherwise specified in the special provisions, a minimum of 3 cones shall be placed transversely across each closed lane and shoulder at each location where a taper across a traffic lane ends and every 2000' as shown on the "Lane Closure" detail. Two Type II barricades may be used instead of the 3 cones. The transverse alignment of the cones or barricades on the closed shoulder may be shifted from the transverse alignment to provide access to the work.
13. Unless otherwise specified in the special provisions, the 2L tangent shown along lane lines shall be used between the L tapers required for each closed traffic lane.
14. Unless otherwise specified in the special provisions, the E5-1 or SC18(CA) and W4-1 signs shall be used as shown.
15. A W7-3aP "NEXT____ MILES" plaque must be used if theshoulder closure extends beyond the distance that can be perceived by road users.

LEGEND

- TRAFFIC CONE
- TRAFFIC CONE (OPTIONAL TAPER)
- TEMPORARY TRAFFIC CONTROL SIGN
- FLASHING ARROW SIGN (FAS)
- FAS SUPPORT OR TRAILER
- PORTABLE FLASHING BEACON

SIGN PANEL SIZE (Min)

A	48" x 48"
B	72" x 60"
C	36" x 30"

STATE OF CALIFORNIA
DEPARTMENT OF TRANSPORTATION

TRAFFIC CONTROL SYSTEM FOR LANE CLOSURE ON FREEWAYS AND EXPRESSWAYS

NO SCALE

RSP T10 DATED APRIL 19, 2013 SUPERSEDES STANDARD PLAN T10 DATED MAY 20, 2011 - PAGE 237 OF THE STANDARD PLANS BOOK DATED 2010.

REVISED STANDARD PLAN RSP T10

2010 REVISED STANDARD PLAN RSP T10

12-18-12

TO ACCOMPANY PLANS DATED 06-01-15

Dist	COUNTY	ROUTE	POST MILES TOTAL PROJECT	SHEET No.	TOTAL SHEETS
12	Ora	73,133	16.6,4.2	79	107

REGISTERED CIVIL ENGINEER

April 19, 2013
PLANS APPROVAL DATE

REGISTERED PROFESSIONAL ENGINEER Gurinderpal Bhullar No. C48815 Exp. 9-30-14 CIVIL STATE OF CALIFORNIA

THE STATE OF CALIFORNIA OR ITS OFFICERS OR AGENTS SHALL NOT BE RESPONSIBLE FOR THE ACCURACY OR COMPLETENESS OF SCANNED COPIES OF THIS PLAN SHEET.

NOTES: See Revised Standard Plan RSP T9 for tables.

Use cone spacing X for taper segment, Y for tangent segment or Z for conflict situations, as approriate, per Table 1, unless X, Y, or Z cone spacing is shown on this sheet.

Unless otherwise specified in the special provisions, all temporary warning signs shall have black legend on fluorescent orange background.

California codes are designated by (CA). Otherwise, Federal (MUTCD) codes are shown.

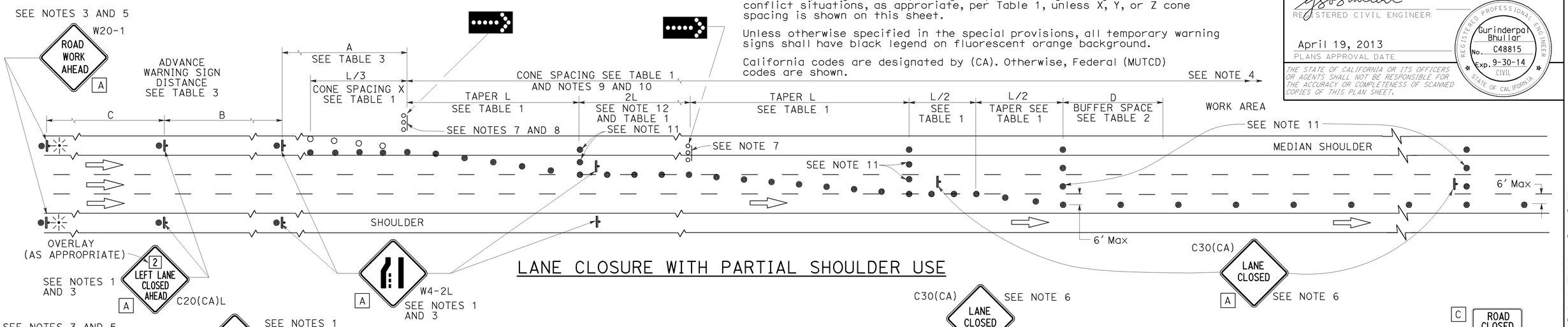

LANE CLOSURE WITH PARTIAL SHOULDER USE

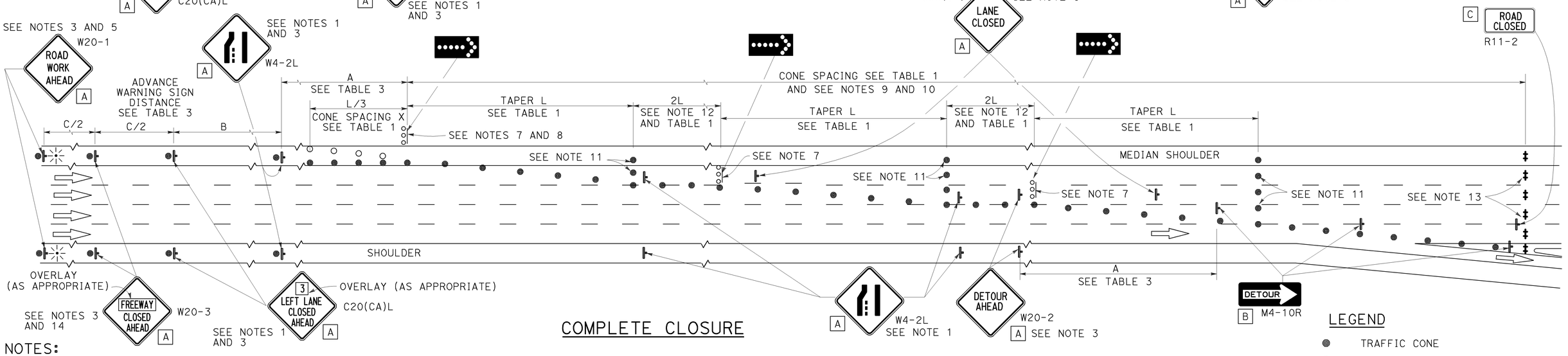

COMPLETE CLOSURE

NOTES:

1. Lane closures on the right side using partial median shoulder as a traffic lane shall conform to the details as shown except that C20(CA)R and W4-2R signs shall be used.
2. At least one person shall be assigned to provide full time maintenance of traffic control devices for lane closures.
3. Each advance warning sign on each side of the roadway shall be equipped with at least two flags for daytime closure. Each flag shall be at least 16" X 16" in size and shall be orange or fluorescent red-orange in color. Flashing beacons shall be placed at the locations indicated for lane closure during hours of darkness.
4. A G20-2 "END ROAD WORK" sign, with minimum size of 48" x 24" as appropriate, shall be placed at the end of the lane closure unless the end of work area is obvious or ends within a larger project's limits.
5. If the W20-1 sign would follow within 2000' of a stationary W20-1 or G20-1 "ROAD WORK NEXT ___ MILES", use a C20(CA) sign for the first advance warning sign.
6. Place a C30(CA) sign every 2000' throughout length of lane closure.
7. One flashing arrow sign for each lane closed. The flashing arrow signs shall be Type I.
8. A minimum 1500' of sight distance shall be provided where possible for vehicles approaching the first flashing arrow sign. Lane closures shall not begin at the top of crest vertical curve or on a horizontal curve.
9. All cones used for lane closures during the hours of darkness shall be fitted with retroreflective bands (or sleeves) as specified in the specifications.
10. Portable delineators, placed at one-half the spacing indicated for traffic cones, may be used instead of cones for daytime closures only.
11. Unless otherwise specified in the special provisions, a minimum of 3 cones shall be placed transversely across each closed lane and shoulder at each location where a taper across a traffic lane ends and every 2000' as shown on the "Lane Closure With Partial Shoulder Use" detail. Two Type II barricades may be used instead of the 3 cones. The transverse alignment of the cones or barricades on the closed shoulder may be shifted from the transverse alignment to provide access to the work.
12. Unless otherwise specified in the special provisions, the 2L tangent shown along lane lines shall be used between the L tapers required for each closed traffic lane.
13. A minimum of Two Type II or III barricades shall be placed across each closed lane and shoulder at the location shown and every 2000' within the complete closure area. Within the complete closure area, the transverse alignment of the barricades on the closed shoulder may be shifted from the transverse alignment to provide access to the work.
14. When specified in the special provisions, a W20-2 "DETOUR AHEAD" sign is to be used in place of the W20-3 "FREEWAY CLOSED AHEAD" sign.

SIGN PANEL SIZE (Min)

A	48" x 48"
B	48" x 18"
C	48" x 30"

LEGEND

- TRAFFIC CONE
- TRAFFIC CONE (OPTIONAL TAPER)
- TEMPORARY TRAFFIC CONTROL SIGN
- FLASHING ARROW SIGN (FAS)
- FAS SUPPORT OR TRAILER
- PORTABLE FLASHING BEACON

STATE OF CALIFORNIA
DEPARTMENT OF TRANSPORTATION

TRAFFIC CONTROL SYSTEM FOR LANE CLOSURES ON FREEWAYS AND EXPRESSWAYS

NO SCALE

RSP T10A DATED APRIL 19, 2013 SUPERSEDES STANDARD PLAN T10A DATED MAY 20, 2011 - PAGE 238 OF THE STANDARD PLANS BOOK DATED 2010.

REVISED STANDARD PLAN RSP T10A

2010 REVISED STANDARD PLAN RSP T10A

12-18-12

Dist	COUNTY	ROUTE	POST MILES TOTAL PROJECT	SHEET No.	TOTAL SHEETS
12	Ora	73,133	16.6,4.2	80	107

REGISTERED CIVIL ENGINEER

April 19, 2013
PLANS APPROVAL DATE

REGISTERED PROFESSIONAL ENGINEER
Gurinderpal Bhullar
No. C48815
Exp. 9-30-14
CIVIL
STATE OF CALIFORNIA

THE STATE OF CALIFORNIA OR ITS OFFICERS OR AGENTS SHALL NOT BE RESPONSIBLE FOR THE ACCURACY OR COMPLETENESS OF SCANNED COPIES OF THIS PLAN SHEET.

TO ACCOMPANY PLANS DATED 06-01-15

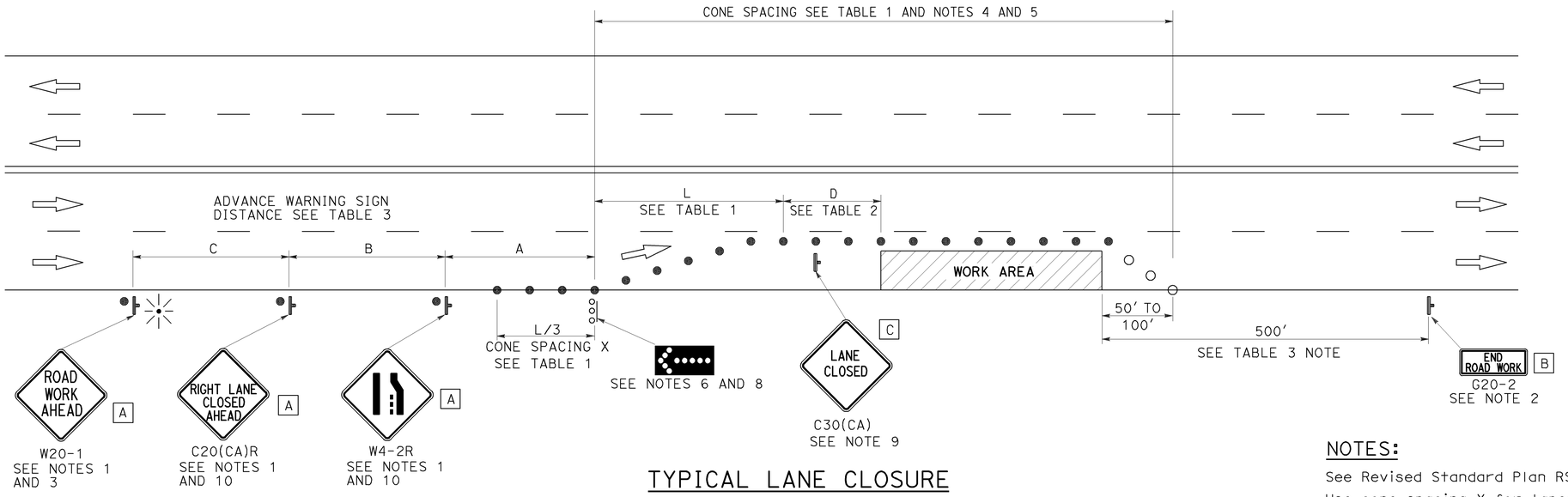

TYPICAL LANE CLOSURE

NOTES:

See Revised Standard Plan RSP T9 for tables.

Use cone spacing X for taper segment, Y for tangent segment or Z for conflict situations, as approriate, per Table 1, unless X, Y, or Z cone spacing is shown on this sheet.

Unless otherwise specified in the special provisions, all temporary warning signs shall have black legend on fluorescent orange background.

California codes are designated by (CA). Otherwise, Federal (MUTCD) codes are shown.

NOTES:

1. Each advance warning sign shall be equipped with at least two flags for daytime closure. Each flag shall be at least 16" x 16" in size and shall be orange or fluorescent red-orange in color. Flashing beacons shall be placed at the locations indicated for lane closure during hours of darkness.
2. A G20-2 "END ROAD WORK" sign, as appropriate, shall be placed at the end of the lane closure unless the end of work area is obvious, or ends within a larger project's limits.
3. If the W20-1 sign would follow within 2000' of a stationary W20-1 or G20-1 "ROAD WORK NEXT _____ MILES", use a C20(CA) sign for the first advance warning sign.
4. All cones used for lane closures during the hours of darkness shall be fitted with retroreflective bands (or sleeves) as specified in the specifications.
5. Portable delineators, placed at one-half the spacing indicated for traffic cones, may be used instead of cones for daytime closures only.
6. Flashing arrow sign shall be either Type I or Type II.
7. For approach speeds over 50 mph, use the "Traffic Control System for Lane Closure On Freeways And Expressways" plan for lane closure details and requirements.
8. A minimum 1500' of sight distance shall be provided where possible for vehicles approaching the first flashing arrow sign. Lane closures shall not begin at the top of crest vertical curve or on a horizontal curve.
9. Place a C30(CA) sign every 2000' throughout length of lane closure.
10. Median lane closures shall conform to the details as shown except that C20(CA)L and W4-2L signs shall be used.
11. At least one person shall be assigned to provide full time maintenance of traffic control devices for lane closure unless, otherwise directed by the Engineer.

LEGEND

- TRAFFIC CONE
- TRAFFIC CONE (OPTIONAL TAPER)
- TEMPORARY TRAFFIC CONTROL SIGN
- FLASHING ARROW SIGN (FAS)
- FAS SUPPORT OR TRAILER
- PORTABLE FLASHING BEACON

SIGN PANEL SIZE (Min)

A	48" x 48"
B	36" x 18"
C	30" x 30"

STATE OF CALIFORNIA
DEPARTMENT OF TRANSPORTATION

TRAFFIC CONTROL SYSTEM FOR LANE CLOSURE ON MULTILANE CONVENTIONAL HIGHWAYS

NO SCALE

RSP T11 DATED APRIL 19, 2013 SUPERSEDES STANDARD PLAN T11 DATED MAY 20, 2011 - PAGE 239 OF THE STANDARD PLANS BOOK DATED 2010.

REVISED STANDARD PLAN RSP T11

2010 REVISED STANDARD PLAN RSP T11

4-2-13

Dist	COUNTY	ROUTE	POST MILES TOTAL PROJECT	SHEET No.	TOTAL SHEETS
12	Ora	73,133	16.6,4.2	81	107

REGISTERED CIVIL ENGINEER

April 19, 2013
PLANS APPROVAL DATE

REGISTERED PROFESSIONAL ENGINEER Gurinderpal Bhullar No. C48815 Exp. 9-30-14 CIVIL STATE OF CALIFORNIA

THE STATE OF CALIFORNIA OR ITS OFFICERS OR AGENTS SHALL NOT BE RESPONSIBLE FOR THE ACCURACY OR COMPLETENESS OF SCANNED COPIES OF THIS PLAN SHEET.

TO ACCOMPANY PLANS DATED 06-01-15

TYPICAL RAMP CLOSURES

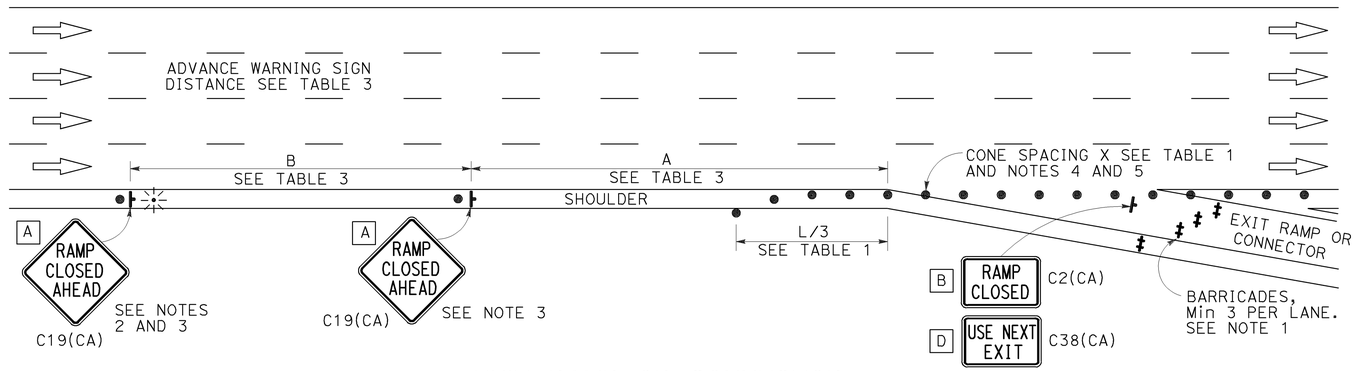

EXIT RAMP OR CONNECTOR

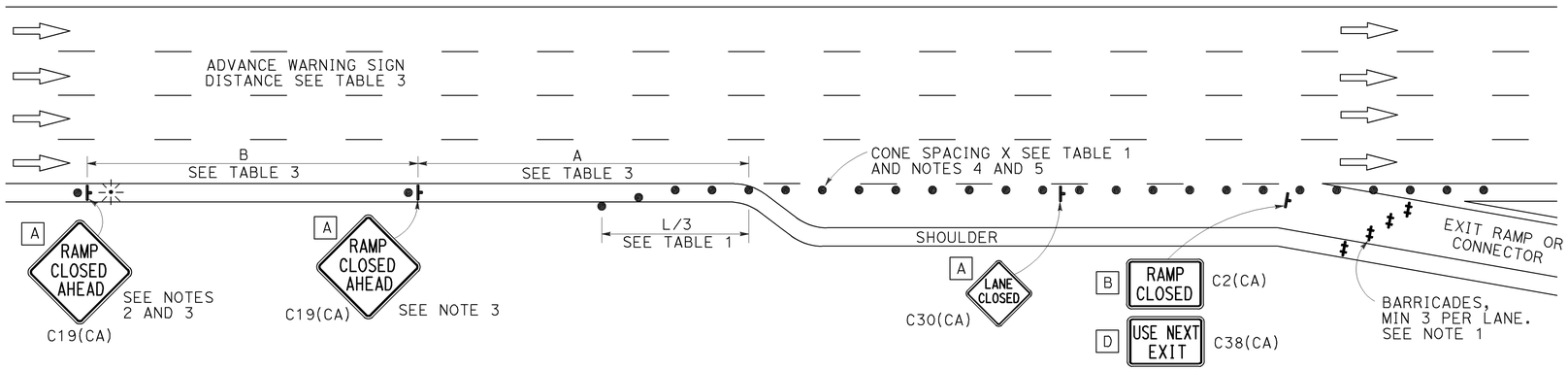

EXIT RAMP OR CONNECTOR WITH ADDITIONAL LANE

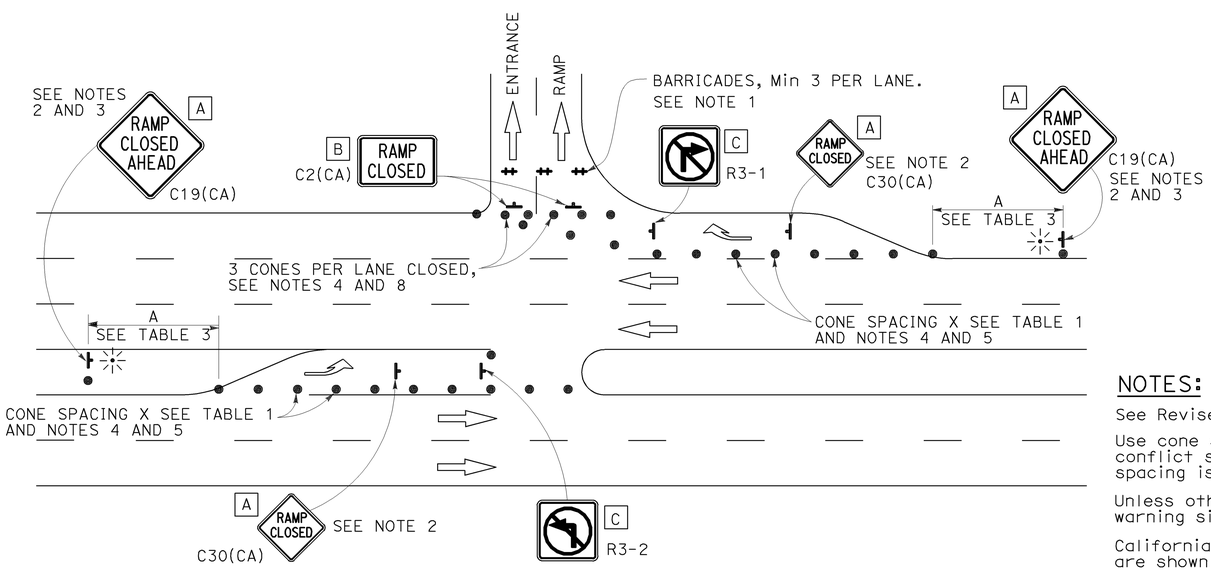

ENTRANCE RAMP WITH TURNING POCKETS

SIGN PANEL SIZE (Min)

- A 48" × 48"
- B 48" × 30"
- C 36" × 36"
- D 48" × 36"

LEGEND

- TRAFFIC CONE
- TEMPORARY TRAFFIC CONTROL SIGN
- BARRICADES
- PORTABLE FLASHING BEACON

NOTES:

1. Barricades shall be Type I, II, or III for closures lasting one week or less and Type III for closures lasting longer than one week.
2. In addition to placing the C19(CA) "RAMP CLOSED AHEAD" and C30(CA) "RAMP CLOSED" signs, black on orange overlay plates with the word "CLOSED" may be mounted, as directed by the Engineer, on all guide signs that refer to the closed ramp. The letter size on the overlay shall be the same as the guide sign.
3. Each advance C19(CA) "RAMP CLOSED AHEAD" sign shall be equipped with at least two flags for daytime closure. Each flag shall be at least 16" × 16" in size and shall be orange or fluorescent red-orange in color. A flashing beacon shall be placed on top of the first C19(CA) sign during hours of darkness.
4. All cones used for ramp closures during the hours of darkness shall be fitted with retroreflective bands (or sleeves) as specified in the specifications.
5. Portable delineators, placed at one-half the spacing indicated for traffic cones, may be used instead of cones for daytime ramp closures only.
6. At least one person shall be assigned to provide full time maintenance of traffic control devices, unless otherwise directed by the Engineer.
7. The existing "EXIT" signs shall be covered during ramp closures.
8. A minimum of 3 cones shall be placed transversely across each closed lane and shoulder.

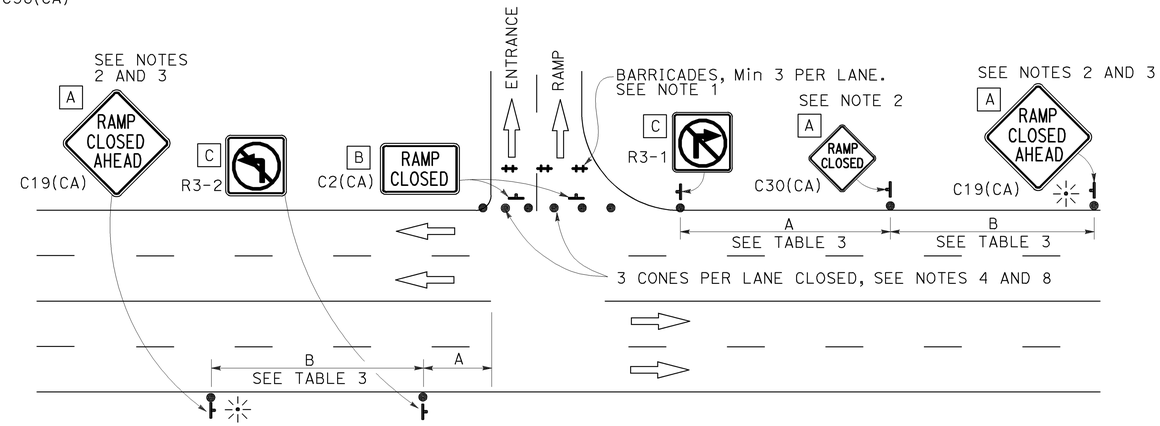

ENTRANCE RAMP WITHOUT TURNING POCKETS

NOTES:

See Revised Standard Plan RSP T9 for tables.

Use cone spacing X for taper segment, Y for tangent segment or Z for conflict situations, as approriate, per Table 1, unless X, Y, or Z cone spacing is shown on this sheet.

Unless otherwise specified in the special provisions, all temporary warning signs shall have black legend on fluorescent orange background.

California codes are designated by (CA). Otherwise, Federal (MUTCD) codes are shown.

STATE OF CALIFORNIA
DEPARTMENT OF TRANSPORTATION

TRAFFIC CONTROL SYSTEM FOR RAMP CLOSURE

NO SCALE

RSP T14 DATED APRIL 19, 2013 SUPERSEDES STANDARD PLAN T14 DATED MAY 20, 2011 - PAGE 242 OF THE STANDARD PLANS BOOK DATED 2010.

REVISED STANDARD PLAN RSP T14

2010 REVISED STANDARD PLAN RSP T14

12-18-12

Dist	COUNTY	ROUTE	POST MILES TOTAL PROJECT	SHEET No.	TOTAL SHEETS
12	Ora	73,133	16.6,4.2	82	107

REGISTERED CIVIL ENGINEER

October 21, 2011
PLANS APPROVAL DATE

REGISTERED PROFESSIONAL ENGINEER Tillat Satter No. C42892 Exp. 3-31-12 CIVIL STATE OF CALIFORNIA

THE STATE OF CALIFORNIA OR ITS OFFICERS OR AGENTS SHALL NOT BE RESPONSIBLE FOR THE ACCURACY OR COMPLETENESS OF SCANNED COPIES OF THIS PLAN SHEET.

TO ACCOMPANY PLANS DATED 06-01-15

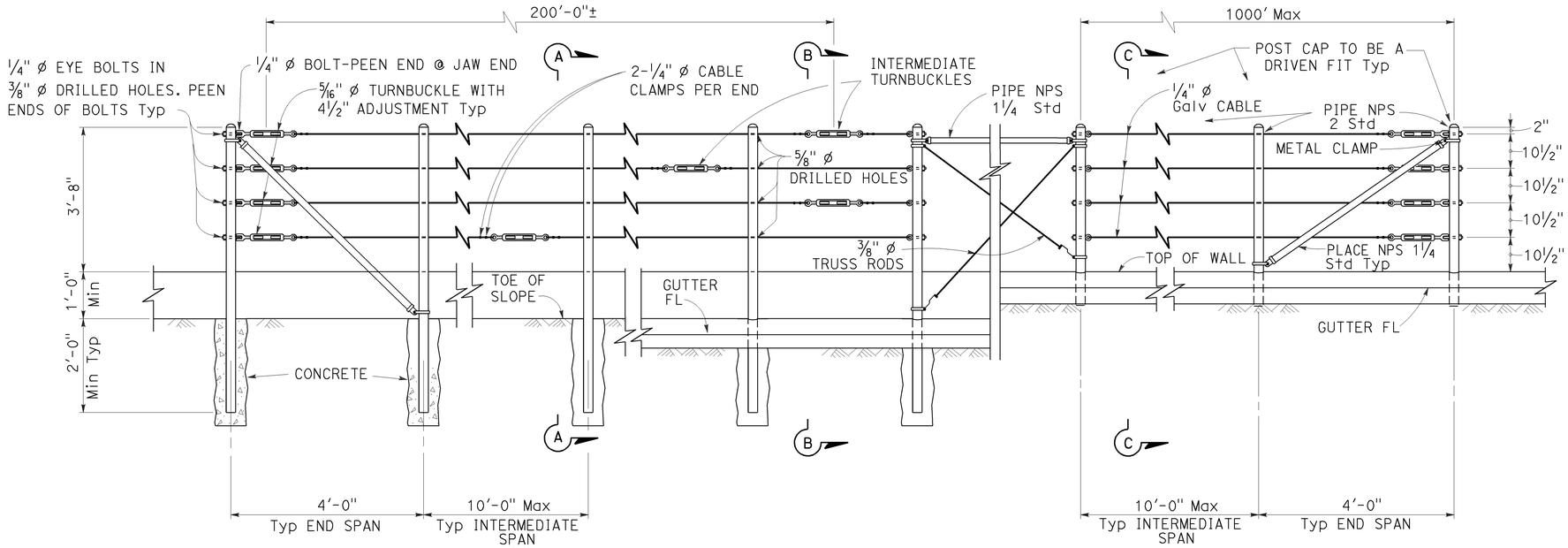

EXISTING WALL (WITHOUT GUTTER)
Existing

RETAINING WALL (WITH GUTTER)
Existing

RETAINING WALL (WITH GUTTER)
New construction

ELEVATION

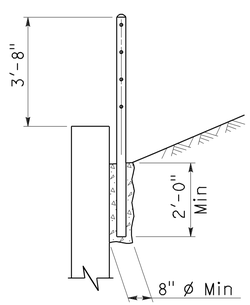

SECTION A-A
Existing

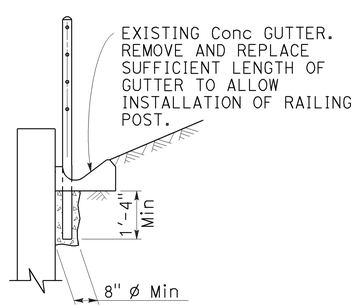

SECTION B-B
Existing

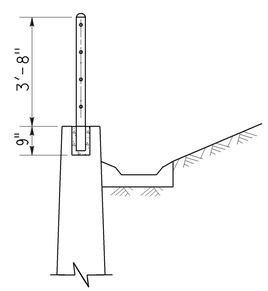

SECTION C-C
New construction

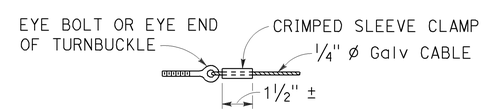

ALTERNATIVE CABLE CONNECTION

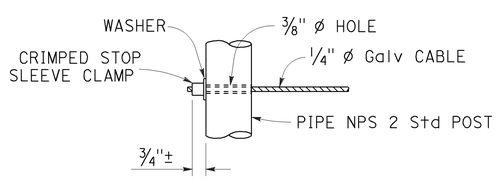

ALTERNATIVE DEAD END ANCHORAGE

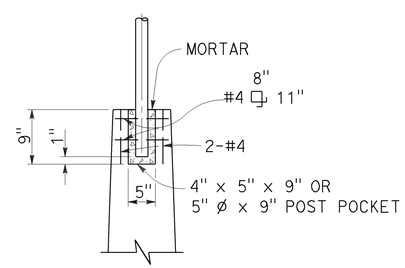

POST POCKET

NOTES:

1. Maximum distance between turnbuckles shall be 200'-0"±.
2. Intermediate turnbuckles to be placed in adjacent spans.
3. Cable shall not be spliced between intermediate turnbuckles and end posts.
4. Posts to be vertical.
5. Alignment of holes in posts may vary to conform to slope of top of retaining wall.
6. The Contractor shall verify all dependent dimensions in the field before ordering or fabricating any material.
7. Line posts shall be braced horizontally and trussed diagonally in both directions at intervals not to exceed 1000'.
8. Post pockets to be centered in top of wall.
9. Typical end spans, braced in both directions, shall be constructed at changes in line where the angle of deflection is 15° or more.
10. Provide thimbles at all cable loops.

STATE OF CALIFORNIA
DEPARTMENT OF TRANSPORTATION

CABLE RAILING

NO SCALE

RSP B11-47 DATED OCTOBER 21, 2011 SUPERSEDES STANDARD PLAN B11-47 DATED MAY 20, 2011 - PAGE 293 OF THE STANDARD PLANS BOOK DATED 2010.

REVISED STANDARD PLAN RSP B11-47

2010 REVISED STANDARD PLAN RSP B11-47

9-14-11

Dist	COUNTY	ROUTE	POST MILES TOTAL PROJECT	SHEET No.	TOTAL SHEETS
12	Ora	73,133	16.6,4.2	83	107

REGISTERED CIVIL ENGINEER

July 19, 2013
PLANS APPROVAL DATE

REGISTERED PROFESSIONAL ENGINEER
Stanley P. Johnson
No. C57793
Exp. 3-31-14
CIVIL
STATE OF CALIFORNIA

THE STATE OF CALIFORNIA OR ITS OFFICERS OR AGENTS SHALL NOT BE RESPONSIBLE FOR THE ACCURACY OR COMPLETENESS OF SCANNED COPIES OF THIS PLAN SHEET.

TO ACCOMPANY PLANS DATED 06-01-15

INSTRUCTIONS TO FABRICATOR

PROJECT PLANS SHOW:

1. Sign structure location.
2. Length of structure frame.
3. Panel size and locations on structure.
4. Walkway length for two post signs.
5. Post type and height to bottom of frame.
6. Base plate elevation.
7. Footing elevation or location of pile foundation.
8. Photoelectric unit location if required.

REFER TO THE FOLLOWING STANDARD PLANS FOR DETAILS NOT SHOWN ON PROJECT PLANS:

Sheet No.	SHEET NAME
S1	Overhead Signs-Truss, Instructions and Examples
S2	Overhead Signs-Truss, Single Post Type, Post Types II to IX
S3	Overhead Signs-Truss, Single Post Type, Base Plate and Anchorage Details
S4	Overhead Signs-Truss, Single Post Type, Structural Frame Members Details No. 1
S5	Overhead Signs-Truss, Single Post Type, Structural Frame Members Details No. 2
S6	Overhead Signs-Truss, Gusset Plate Details
S8	Overhead Signs-Truss, Single Post Type, Round Pedestal Pile Foundation
S9	Overhead Signs-Truss, Two Post Type, Post Types I-S through VII-S
S10	Overhead Signs-Truss, Two Post Type, Base Plate and Anchorage Details
S11	Overhead Signs-Truss, Two Post Type, Structural Frame Members
S12	Overhead Signs-Truss, Structural Frame Details
S13	Overhead Signs-Truss, Frame Juncture Details
S15	Overhead Signs-Truss, Two Post Type, Round Pedestal Pile Foundation
S16	Overhead Signs, Walkway Details No. 1
S17	Overhead Signs, Walkway Details No. 2
S17A	Overhead Signs, Walkway Details No. 3
S18	Overhead Signs, Walkway Safety Railing Details
S19	Overhead Signs-Truss, Sign Mounting Details, Laminated Panel-Type A
S20	Overhead Signs, Steel Frames, Removable Sign Panel Frames
S21	Overhead Signs, Removable Sign Panel Frames, Mounting Details
S22	Overhead Signs-Truss, Removable Sign Panel Frames, 9'-2" and 10'-0" Sign Panels

WALKWAY BRACKETS:

Space all walkway brackets maintaining uniform spacing where possible. Maximum spacing shall not exceed 5'-6".

LIGHTING FIXTURE SUPPORTS:

Where distance from walkway bracket to end of sign panel exceeds 1'-4", extend lighting fixture supports to next walkway bracket. See Example No. 2.

WALKWAY AND SAFETY RAILING:

Walkway to be continuous for entire length of frame for single post signs. For two post signs, see Project Plans. Safety railing to protect entire walkway, but continuous for no more than 11'-0" in one unit.

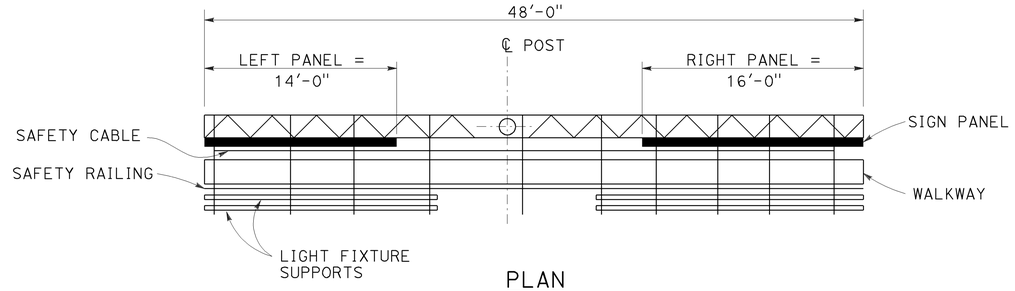

PLAN

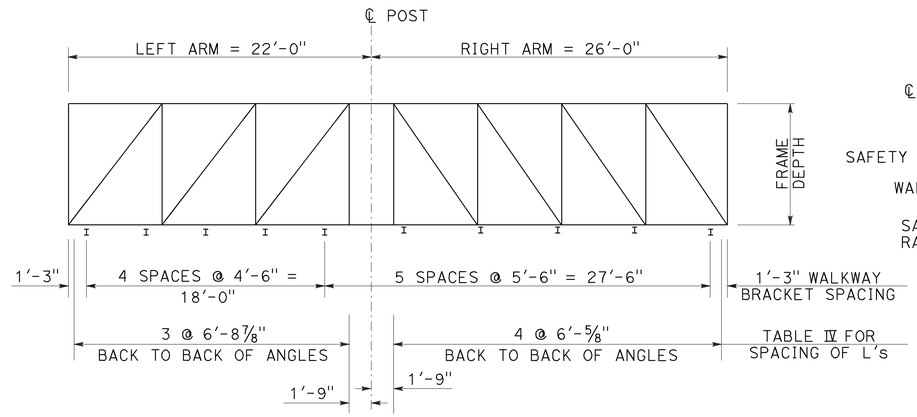

ELEVATION

UNBALANCED SINGLE POST TYPE

Example No. 1

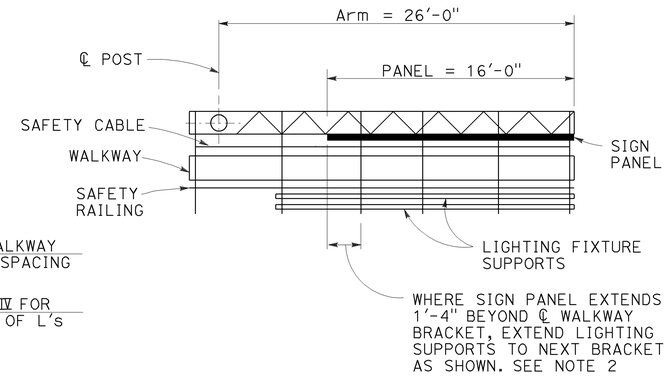

PLAN

CANTILEVER SINGLE POST TYPE

Example No. 2

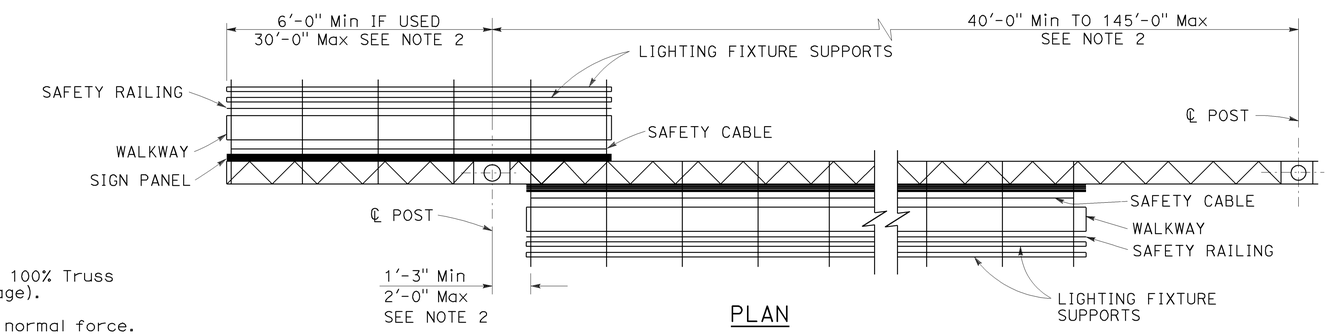

PLAN

TWO POST TYPE WITH CANTILEVER (PART DOUBLE-FACED)

Example No. 3

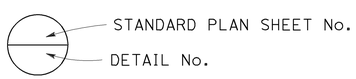

NOTES:

1. Signs are shown and dimensioned looking in the direction of traffic. Double faced signs are shown and dimensioned looking ahead along stationing.
2. Mandatory dimension limit.

GENERAL NOTES:

LOADING:

WIND LOADING:

Normal to face of sign: 40.3 psf on 100% Truss surface area (i.e. 100% panel coverage).

Transverse to face of sign: 20% of normal force.

WALKWAY LOADING:

Dead load +500 LB concentrated live load.

UNIT STRESSES:

STRUCTURAL STEEL: fy = 36,000 psi
REINFORCED CONCRETE: fy = 60,000 psi
f'c = 3600 psi
FOOTING SOIL PRESSURE: 2.5 ksf (spread footing)

MINIMUM CLEARANCE

Vertical roadway clearance 18'-0" (bottom of walkway system)

WELDING:

All welding continuous unless otherwise noted on the plans.

STATE OF CALIFORNIA
DEPARTMENT OF TRANSPORTATION

OVERHEAD SIGNS-TRUSS INSTRUCTIONS AND EXAMPLES

NO SCALE

RSP S1 DATED JULY 19, 2013 SUPERSEDES STANDARD PLAN S1 DATED MAY 20, 2011 - PAGE 334 OF THE STANDARD PLANS BOOK DATED 2010.

REVISED STANDARD PLAN RSP S1

2010 REVISED STANDARD PLAN RSP S1

7-11-13

Dist	COUNTY	ROUTE	POST MILES TOTAL PROJECT	SHEET No.	TOTAL SHEETS
12	Ora	73,133	16.6,4.2	84	107

REGISTERED CIVIL ENGINEER

July 19, 2013
PLANS APPROVAL DATE

REGISTERED PROFESSIONAL ENGINEER
Stanley P. Johnson
No. C57793
Exp. 3-31-14
CIVIL
STATE OF CALIFORNIA

THE STATE OF CALIFORNIA OR ITS OFFICERS OR AGENTS SHALL NOT BE RESPONSIBLE FOR THE ACCURACY OR COMPLETENESS OF SCANNED COPIES OF THIS PLAN SHEET.

TO ACCOMPANY PLANS DATED 06-01-15

2010 REVISED STANDARD PLAN RSP S9

NOTES:

1. For "General Notes", see Revised Standard Plan RSP S1.
2. Longer side of post and footing (longitudinal) shall be normal to axis of sign.
3. Backfill shall be in place prior to erection of post.
4. Thread upper 10" of anchor bolts and galvanize upper 1'-0".
5. Spread footing with square pedestal shown, use pile foundation when shown on the Project Plans. For pile foundation details, see Standard Plan S15.
6. Anchor plates may be retained with Hex nut or formed head as an alternative to details shown.
7. When foundation is located on a steep slope with exposed face of concrete adjacent to traffic, see "Detail C" on Standard Plan S15.
8. Slope protection required when indicated on Project Plans.
9. Weld coupling or drill and tap for 1½"C chase nipple, perpendicular to sign panel axis away from approaching traffic. Plug with recessed pipe plug. See Standard Plan ES-15C.
10. Excavate to neat lines and place concrete against undisturbed material.

TABLE XIV

POST TYPE	PIPE			ROUND PEDESTAL					SQUARE PEDESTAL						SPREAD FOOTING					
				PEDESTAL SIZE	VERTICAL ⌋-BARS		SPIRAL		PEDESTAL SIZE	VERTICAL ⌋-BARS			HOOP		(SEE NOTE 2)	REINFORCEMENT				
																WIDTH		LONGITUDINAL		FOOTING STIRRUPS
	NPS	THICKNESS	SPLIT	Dia	EQUALLY SPACED TOTAL	BAR SIZE	BAR SIZE	PITCH	SQUARE	EQUALLY SPACED TOTAL	BAR SIZE	# OF BARS EA FACE	BAR SIZE	SPACING		TOP	BOTTOM	TOP	BOTTOM	
I-S	14	½"	5"	5'-3"	16	#10	#5	3½"	5'-3"	16	#10	5	#5	6"	7'-0" x 13'-0" x 2'-6"	14-#6	14-#7	10-#9	10-#9	#5 @ 12
II-S	16	↓	6"	↓	↓	↓	↓	↓	↓	↓	↓	↓	↓	↓	7'-0" x 13'-0" x 2'-6"	14-#6	14-#7	10-#9	10-#9	↓
III-S	18	↓	7"	↓	↓	↓	↓	↓	↓	↓	↓	↓	↓	↓	7'-0" x 13'-0" x 2'-6"	14-#6	14-#7	11-#9	11-#9	↓
IV-S	20	↓	8"	↓	↓	↓	↓	↓	↓	↓	↓	↓	↓	↓	8'-0" x 14'-0 x 2'-6"	15-#7	15-#7	12-#9	12-#11	↓
V-S	24	↓	8"	5'-9"	↓	#11	↓	↓	5'-9"	↓	#11	↓	↓	↓	8'-0" x 16'-0" x 3'-0"	17-#7	17-#7	12-#9	12-#11	↓
VI-S	24	31/32''	10"	5'-9"	↓	#11	↓	↓	5'-9"	↓	#11	↓	↓	↓	9'-0" x 17'-0" x 3'-0"	18-#7	18-#7	12-#9	12-#11	↓
VII-S	24	31/32''	10"	5'-9"	↓	#11	↓	↓	5'-9"	↓	#11	↓	↓	↓	10'-0 x 18'-0" x 3'-0"	19-#7	19-#7	13-#9	13-#11	↓

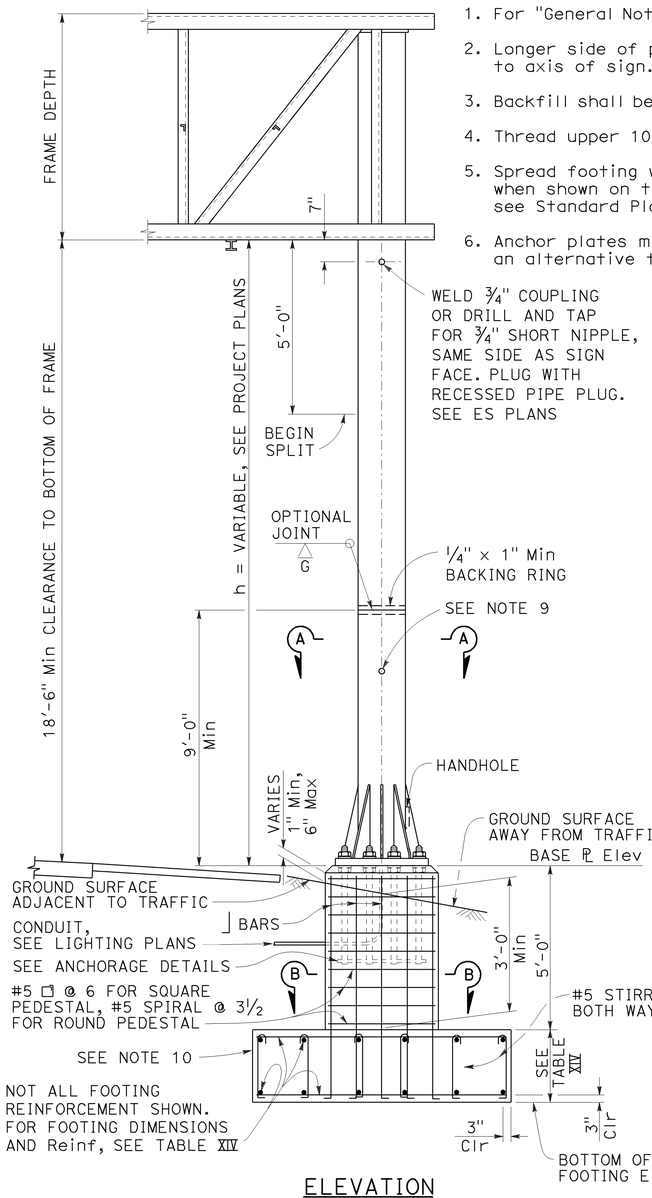

ELEVATION
SEE NOTE 5

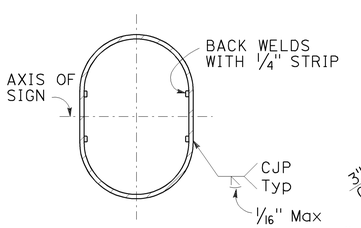

SECTION A-A

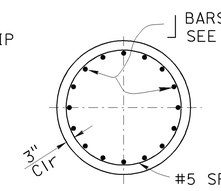

SECTION B-B

ROUND PEDESTAL

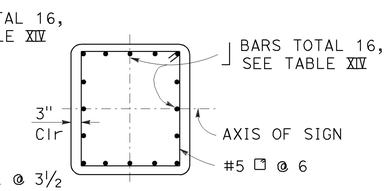

SECTION B-B

SQUARE PEDESTAL

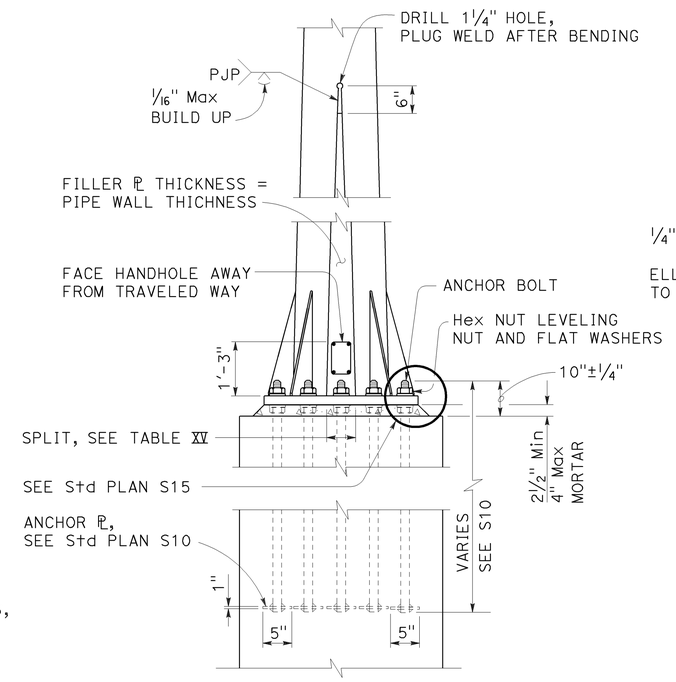

ELEVATION
SIDE VIEW

ANCHORAGE DETAILS

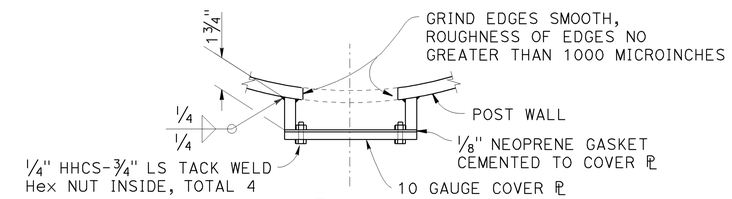

PLAN

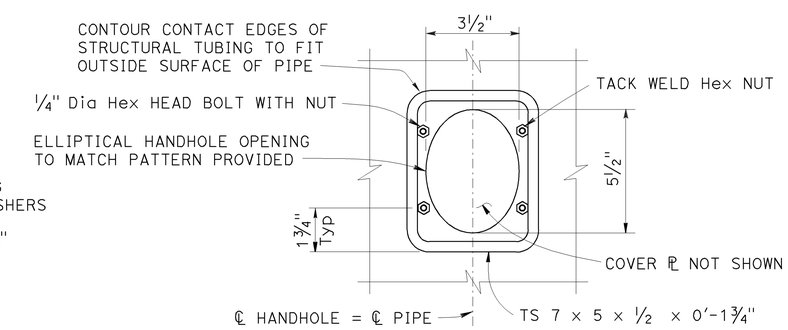

ELEVATION

TYPICAL DETAILS OF HANDHOLE AND COVER

STATE OF CALIFORNIA
DEPARTMENT OF TRANSPORTATION

OVERHEAD SIGNS-TRUSS TWO POST TYPE POST TYPES I-S THROUGH VII-S

NO SCALE

RSP S9 DATED JULY 19, 2013 SUPERSEDES STANDARD PLAN S9
DATED MAY 20, 2011 - PAGE 342 OF THE STANDARD PLANS BOOK DATED 2010.

REVISED STANDARD PLAN RSP S9

7-11-13

Dist	COUNTY	ROUTE	POST MILES TOTAL PROJECT	SHEET No.	TOTAL SHEETS
12	Ora	73,133	16.6,4.2	85	107

Theresa Gabriel
REGISTERED ELECTRICAL ENGINEER

July 19, 2013
PLANS APPROVAL DATE

REGISTERED PROFESSIONAL ENGINEER Theresa Aziz Gabriel No. E15129 Exp. 6-30-14 ELECTRICAL STATE OF CALIFORNIA

THE STATE OF CALIFORNIA OR ITS OFFICERS OR AGENTS SHALL NOT BE RESPONSIBLE FOR THE ACCURACY OR COMPLETENESS OF SCANNED COPIES OF THIS PLAN SHEET.

TO ACCOMPANY PLANS DATED 06-01-15

LEGEND:

- AB — ABANDON. IF APPLIED TO CONDUIT, REMOVE CONDUCTORS
- BC — INSTALL PULL BOX IN EXISTING CONDUIT RUN
- BP — PEDESTRIAN BARRICADE, TYPE AS INDICATED ON PLAN
- CB — INSTALL CONDUIT INTO EXISTING PULL BOX
- CC — CONNECT NEW AND EXISTING CONDUIT. REMOVE EXISTING CONDUCTORS AND INSTALL CONDUCTORS AS INDICATED
- CF — CONDUIT TO REMAIN FOR FUTURE USE. REMOVE CONDUCTORS. INSTALL PULL TAPE
- DH — DETECTOR HANDHOLE
- FA — FOUNDATION TO BE ABANDONED
- IS — INSTALL SIGN ON SIGNAL MAST ARM
- NS — NO SLIP BASE ON STANDARD
- PEC — PHOTOELECTRIC CONTROL
- PEU — PHOTOELECTRIC UNIT
- RC — EQUIPMENT OR MATERIAL TO BE REMOVED AND BECOME THE PROPERTY OF THE CONTRACTOR
- RE — REMOVE ELECTROLIER, FUSES AND BALLAST. TAPE ENDS OF CONDUCTORS
- RL — RELOCATE EQUIPMENT
- RR — REMOVE AND REUSE EQUIPMENT
- RS — REMOVE AND SALVAGE EQUIPMENT
- SC — SPLICE NEW TO EXISTING CONDUCTORS
- SD — SERVICE DISCONNECT
- TSP — TELEPHONE SERVICE POINT

ABBREVIATIONS

APS	ACCESSIBLE PEDESTRIAN SIGNAL
BBS	BATTERY BACKUP SYSTEM
BC	BOLT CIRCLE
BPB	BICYCLE PUSH BUTTON
C	CONDUIT
CB	CIRCUIT BREAKER
CCTV	CLOSED CIRCUIT TELEVISION
Ckt	CIRCUIT
CMS	CHANGEABLE MESSAGE SIGN
Ctid	CALTRANS IDENTIFICATION
Comm	COMMUNICATION
DLC	LOOP DETECTOR LEAD-IN CABLE
EMS	EXTINGUISHABLE MESSAGE SIGN
EVUC	EMERGENCY VEHICLE UNIT CABLE
EVUD	EMERGENCY VEHICLE UNIT DETECTOR
FB	FLASHING BEACON
FBCA	FLASHING BEACON CONTROL ASSEMBLY
FBS	FLASHING BEACON WITH SLIP BASE
FO	FIBER OPTIC
G	EQUIPMENT GROUNDING CONDUCTOR
GB	GROUND BUS
GFCI	GROUND FAULT CIRCUIT INTERRUPTER
HAR	HIGHWAY ADVISORY RADIO
Hex	HEXAGONAL
HPS	HIGH PRESSURE SODIUM
IISNS	INTERNALLY ILLUMINATED STREET NAME SIGN
ISL	INDUCTION SIGN LIGHTING
LED	LIGHT EMITTING DIODE
LMA	LUMINAIRE MAST ARM
LPS	LOW PRESSURE SODIUM
Ltg	LIGHTING
Lum	LUMINAIRE
M	METERED
MAT	MAST ARM MOUNTING TOP ATTACHMENT
MAS	MAST ARM MOUNTING SIDE ATTACHMENT
M/M	MULTIPLE TO MULTIPLE TRANSFORMER
Mtg	MOUNTING
MV	MERCURY VAPOR LIGHTING FIXTURE
MVDS	MICROWAVE VEHICLE DETECTION SYSTEM
N	NEUTRAL (GROUNDED CONDUCTOR)
NB	NEUTRAL BUS
NC	NORMALLY CLOSE
NO	NORMALLY OPEN
P	CIRCUIT BREAKER'S POLE
PB	PULL BOX
PBA	PUSH BUTTON ASSEMBLY
PEC	PHOTOELECTRIC CONTROL
Ped	PEDESTRIAN
PEU	PHOTOELECTRIC UNIT
PT	CONDUIT WITH PULL TAPE
RE	RELOCATED EQUIPMENT
RM	RAMP METERING
RWIS	ROADSIDE WEATHER INFORMATION SYSTEM
SB	SLIP BASE
SIC	SIGNAL INTERCONNECT CABLE
Sig	SIGNAL
SMA	SIGNAL MAST ARM
SNS	STREET NAME SIGN
SP	SERVICE POINT
TDC	TELEPHONE DEMARCATION CABINET
TMS	TRAFFIC MONITORING STATION
TOS	TRAFFIC OPERATIONS SYSTEM
Veh	VEHICLE
VIVDS	VIDEO IMAGE VEHICLE DETECTION SYSTEM
WIM	WEIGH-IN-MOTION
Xfmr	TRANSFORMER

SOFFIT AND WALL MOUNTED LUMINAIRES

- PENDANT, 70 W HPS UNLESS OTHERWISE SPECIFIED
- FLUSH, 70 W HPS UNLESS OTHERWISE SPECIFIED
- WALL SURFACE, 70 W HPS UNLESS OTHERWISE SPECIFIED
- EXISTING SOFFIT OR WALL LUMINAIRE TO REMAIN UNMODIFIED
- EXISTING SOFFIT OR WALL LUMINAIRE TO BE MODIFIED AS SPECIFIED

NOTE:
Arrow indicates "street side" of luminaire.

MISCELLANEOUS ELECTROLIERS

NEW	EXISTING	
		LUMINAIRE ON WOOD POLE
		NON-STANDARD ELECTROLIER (SEE PROJECT NOTES OR PROJECT PLANS)
		CITY ELECTROLIER
		ELECTROLIER FOUNDATION (FUTURE INSTALLATION)

NOTES:

1. HPS luminaires shall be 310 W HPS when installed on Type 21, 21D, 30, 31 and 32 Standards, unless otherwise specified. HPS luminaires shall be 200 W when installed on other type standards or poles, unless otherwise specified.
2. LED luminaires shall be 235 W when installed on Type 21, 21D, 30, 31 and 32 Standards, unless otherwise specified. LED luminaires shall be 165 W when installed on other type standards or poles, unless otherwise specified.
3. Luminaires shall be the cutoff type, ANSI Type III medium cutoff lighting distribution, unless otherwise specified.

STANDARD ELECTROLIER

NEW	EXISTING	STANDARD TYPE
		15
		15D
		15 STRUCTURE
		15D STRUCTURE
		21
		21D
		21 STRUCTURE
		21D STRUCTURE
		30
		31
		32

COMMONLY USED SYMBOLS FOR UNITED STATES CUSTOMARY UNITS OF MEASUREMENT:

SYMBOL USED	DEFINITIONS
Ω	OHMS
min	MINUTE
s	SECOND
bps	BITS PER SECOND
Bps	BYTES PER SECOND
A	AMPERE
V	VOLT
V(dc)	VOLT (DIRECT CURRENT)
V(ac)	VOLT (ALTERNATING CURRENT)
FC	FOOT - CANDLE
W	WATTS
VA	VOLT-AMPERE
M	MEGA
k	KILO
m	MILLI
μ	MICRO
P	PICO
Hz	HERTZ

STATE OF CALIFORNIA
DEPARTMENT OF TRANSPORTATION

ELECTRICAL SYSTEMS (LEGEND AND ABBREVIATIONS)

NO SCALE

RSP ES-1A DATED JULY 19, 2013 SUPERSEDES STANDARD PLAN ES-1A DATED MAY 20, 2011 - PAGE 425 OF THE STANDARD PLANS BOOK DATED 2010.

REVISED STANDARD PLAN RSP ES-1A

2010 REVISED STANDARD PLAN RSP ES-1A

Dist	COUNTY	ROUTE	POST MILES TOTAL PROJECT	SHEET No.	TOTAL SHEETS
12	Ora	73,133	16.6,4.2	86	107

Theresa Gabriel
REGISTERED ELECTRICAL ENGINEER

July 19, 2013
PLANS APPROVAL DATE

REGISTERED PROFESSIONAL ENGINEER
Theresa Aziz Gabriel
No. E15129
Exp. 6-30-14
ELECTRICAL
STATE OF CALIFORNIA

THE STATE OF CALIFORNIA OR ITS OFFICERS OR AGENTS SHALL NOT BE RESPONSIBLE FOR THE ACCURACY OR COMPLETENESS OF SCANNED COPIES OF THIS PLAN SHEET.

TO ACCOMPANY PLANS DATED 06-01-15

CONDUIT

NEW	EXISTING	
		LIGHTING CONDUIT, UNLESS OTHERWISE INDICATED OR NOTED
		TRAFFIC SIGNAL CONDUIT
C	c	COMMUNICATION CONDUIT
T	t	TELEPHONE CONDUIT
F	f	FIRE ALARM CONDUIT
FO	fo	FIBER OPTIC CONDUIT
		CONDUIT TERMINATION
R	r	CONDUIT RISER ATTACHED TO THE STRUCTURE OR SERVICE POLE

SERVICE EQUIPMENT

NEW	EXISTING	
OH	oh	OVERHEAD LINES
U	U	WOOD POLE, "U" INDICATES UTILITY OWNED
		POLE GUY WITH ANCHOR
		UTILITY TRANSFORMER - GROUND MOUNTED
III	III	SERVICE EQUIPMENT ENCLOSURE TYPE. DOOR INDICATES FRONT OF ENCLOSURE
T	t	TELEPHONE DEMARCATION CABINET

POLE-MOUNTED SERVICE DESIGNATION

TYPE H SERVICE, 28'-10" — TYPE OF INSTALLATION AND POLE HEIGHT ABOVE GRADE

FLASHING BEACON

NEW	EXISTING	
R	R	FLASHING BEACON (ONE VEHICLE SIGNAL HEAD WITH BACKPLATE AND VISOR) "R" INDICATES RED INDICATION, "Y" INDICATES YELLOW INDICATION
Y Y	Y Y	FLASHING BEACON WITH TYPE 15-FBS STANDARD AND A SIGN.
R R	R R	FLASHING BEACON WITH TYPES 9, 9A OR 9B SIGN UNLESS OTHERWISE SPECIFIED OR INDICATED

SIGNAL EQUIPMENT

NEW	EXISTING	
C	C	PEDESTRIAN SIGNAL HEAD "C" INDICATES COUNTDOWN PEDESTRIAN HEAD
		PUSH BUTTON ASSEMBLY POST
		PEDESTRIAN BARRICADE
		VEHICLE SIGNAL HEAD (WITH BACKPLATE AND 3-SECTIONS: RED, YELLOW AND GREEN)
		VEHICLE SIGNAL HEAD WITH ANGLE VISOR
PV	PV	MODIFICATIONS OF BASIC SYMBOL: "L" INDICATES ALL NON-ARROW SECTIONS LOUVERED "LG" INDICATES LOUVERED GREEN SECTION ONLY "PV" INDICATES ALL 12" SECTIONS PROGRAMMED VISIBILITY "8" INDICATES ALL 8" SECTIONS (ONLY WHEN SPECIFIED)
		VEHICLE SIGNAL HEAD CONSISTING OF RED, YELLOW AND GREEN LEFT ARROW SECTIONS
		VEHICLE SIGNAL HEAD CONSISTING OF RED AND YELLOW SECTIONS WITH AN UP GREEN ARROW SECTION
		VEHICLE SIGNAL HEAD (5 SECTION) CONSISTING OF RED, YELLOW AND GREEN SECTIONS WITH YELLOW AND GREEN RIGHT ARROW SECTIONS
		TYPE 15TS STANDARD WITH VEHICLE SIGNAL HEAD AND LUMINAIRE
		TYPE 21TS STANDARD WITH VEHICLE SIGNAL HEAD AND LUMINAIRE
		STANDARD WITH LUMINAIRE AND SIGNAL MAST ARMS AND ATTACHED VEHICLE SIGNAL HEADS
		TYPE 1 STANDARD WITH ATTACHED VEHICLE SIGNAL HEADS
		STANDARD WITH A SIGNAL MAST ARM, ATTACHED VEHICLE SIGNAL HEADS AND INTERNALLY ILLUMINATED STREET NAME SIGN
		CONTROLLER ASSEMBLY. DOOR INDICATES FRONT OF CABINET

SIGNAL EQUIPMENT Cont

NEW	EXISTING	
		GUARD POST
		TYPE 1 STANDARD WITH RAMP METERING SIGN
		OPTICAL DETECTOR FOR THE EMERGENCY VEHICLE DETECTION SYSTEM

NOTES:

1. All signal sections shall be 12" unless shown otherwise.
2. Signal heads shall be provided with backplates unless shown otherwise.

ILLUMINATED OVERHEAD SIGN

NEW	EXISTING	
		SINGLE POST, SINGLE ILLUMINATED SIGN, BALANCED BUTTERFLY
		SINGLE POST, DOUBLE ILLUMINATED SIGN, BALANCED BUTTERFLY
		SINGLE POST, SINGLE ILLUMINATED SIGN, FULL CANTILEVER
		DOUBLE POST, SINGLE ILLUMINATED SIGN
		SINGLE ILLUMINATED SIGN MOUNTED ON STRUCTURE
		DOUBLE POST, SINGLE ILLUMINATED SIGN WITH ELECTROLIER

STATE OF CALIFORNIA
DEPARTMENT OF TRANSPORTATION

ELECTRICAL SYSTEMS (LEGEND AND ABBREVIATIONS)

NO SCALE

RSP ES-1B DATED JULY 19, 2013 SUPERSEDES STANDARD PLAN ES-1B DATED MAY 20, 2011 - PAGE 426 OF THE STANDARD PLANS BOOK DATED 2010.

REVISED STANDARD PLAN RSP ES-1B

2010 REVISED STANDARD PLAN RSP ES-1B

7-15-13

Dist	COUNTY	ROUTE	POST MILES TOTAL PROJECT	SHEET No.	TOTAL SHEETS
12	Ora	73,133	16.6,4.2	87	107

Theresa Gabriel
REGISTERED ELECTRICAL ENGINEER

July 19, 2013
PLANS APPROVAL DATE

REGISTERED PROFESSIONAL ENGINEER
Theresa Aziz Gabriel
No. E15129
Exp. 6-30-14
ELECTRICAL
STATE OF CALIFORNIA

THE STATE OF CALIFORNIA OR ITS OFFICERS OR AGENTS SHALL NOT BE RESPONSIBLE FOR THE ACCURACY OR COMPLETENESS OF SCANNED COPIES OF THIS PLAN SHEET.

TO ACCOMPANY PLANS DATED 06-01-15

EQUIPMENT IDENTIFICATION

ILLUMINATED SIGN IDENTIFICATION NUMBER:

SIGN No. 12345
10 ISL SCI 1.0

- SIGN NUMBER - PLACE ON POST OR STRUCTURE
- TRANSFORMER RATING (kVA)
- LIGHTING CONTROL TYPE
- NUMBER AND TYPE OF FIXTURES

DO NOT PLACE ON STANDARD OR STRUCTURE

ELECTROLIER OR EQUIPMENT IDENTIFICATION NUMBER:

12345 - 15'-0"

- MAST ARM LENGTH, IF SHOWN. DO NOT PLACE ON STANDARD OR STRUCTURE
- EQUIPMENT NUMBER - PLACE ON STANDARD OR STRUCTURE. EXISTING EQUIPMENT NUMBERS ARE SHOWN IN PARENTHESIS

CONDUIT AND CONDUCTOR IDENTIFICATION:

1½"C, 2#10, 15#14, 2 DLC, 12P#18

- PAIR
- NUMBER AND SIZE OF CONDUCTORS AND CABLES
- SIZE OF CONDUIT IN INCHES

ø1, ø2, ø2P, etc.	TRAFFIC PHASE IDENTIFICATION FOR SIGNAL FACES, DETECTORS AND PHASE DIAGRAMS
1 2 3	LEGEND NUMBERS
A B C	EQUIPMENT, SIGNAL POLES, INSTALLATION OR ITEMS
1 2 3	CONDUIT RUN NUMBERS

SIGNAL AND LIGHTING STANDARD (TYPICAL DESIGNATION):

19A - 3 - 100

- WIND VELOCITY = 100 mph
- CASE 3 ARM LOADING
- STANDARD TYPE
- STANDARD PLAN SHEET NUMBER
- DETAIL, NUMBER, SECTION, TYPE OR ELEVATION

MISCELLANEOUS EQUIPMENT

NEW	EXISTING	
CMS	cms	CHANGEABLE MESSAGE SIGN
		CLOSED CIRCUIT TELEVISION CAMERA
		HIGHWAY ADVISORY RADIO POLE AND ANTENNA
EMS	ems	EXTINGUISHABLE MESSAGE SIGN
M V	m v	DETECTION DEVICE M = MICROWAVE SENSOR V = VIDEO IMAGE SENSOR

WIRING DIAGRAM LEGEND

----	EXTERNAL CONDUCTOR
	CONDUCTOR OR BUS
	TIE POINT
	CONTACTOR COIL
	CONTACTOR, NO CONTACT
	TERMINAL BLOCKS
	CONTACTOR, NC CONTACT
	ENCLOSURE BOND
	GROUNDING ELECTRODE
	CIRCUIT BREAKER
	RECEPTACLE

PULL BOXES

NEW	EXISTING	
		PULL BOX, No. 5 UNLESS OTHERWISE INDICATED OR NOTED
3	9A(21)	PULL BOX, ADDITIONAL DESIGNATIONS OR DESCRIPTIONS

3 No. 3½ PULL BOX
5 No. 5 PULL BOX
6 No. 6 PULL BOX
7 No. 7 (CEILING PULL BOX)
8 No. 8 (PENDANT SOFFIT PULL BOX)
9 No. 9 PULL BOX
9A No. 9A PULL BOX

(C) COMMUNICATIONS PULL BOX
(E) PULL BOX WITH EXTENSION
(S) SPRINKLER CONTROL PULL BOX
(21) ANCHOR BOLTS AND CONDUIT FOR FUTURE INSTALLATION OF TYPE 21 STANDARD
(T) TRAFFIC PULL BOX

VEHICLE DETECTORS

5 J 9 U

- VEHICLE DETECTOR DESIGNATION
- U = UPPER
  L = LOWER
- SLOT NUMBER IN INPUT FILE
- INPUT FILE (I OR J)
- PHASE

NEW	EXISTING	
		TYPE A DETECTOR LOOP. OUTLINE OF SAWCUT SHOWN
		TYPE B DETECTOR LOOP. OUTLINE OF SAWCUT SHOWN
		TYPE C DETECTOR LOOP. OUTLINE OF SAWCUT SHOWN
		TYPE D DETECTOR LOOP. OUTLINE OF SAWCUT SHOWN
		TYPE E DETECTOR LOOP. OUTLINE OF SAWCUT SHOWN
		TYPE Q DETECTOR LOOP. OUTLINE OF SAWCUT SHOWN
		MAGNETIC DETECTOR
DH	dh	DETECTOR HANDHOLE
		MICROWAVE OR VIDEO DETECTION ZONE

STATE OF CALIFORNIA
DEPARTMENT OF TRANSPORTATION

ELECTRICAL SYSTEMS (LEGEND AND ABBREVIATIONS)

NO SCALE

RSP ES-1C DATED JULY 19, 2013 SUPERSEDES STANDARD PLAN ES-1C DATED MAY 20, 2011 - PAGE 427 OF THE STANDARD PLANS BOOK DATED 2010.

REVISED STANDARD PLAN RSP ES-1C

2010 REVISED STANDARD PLAN RSP ES-1C

7-11-13

Dist	COUNTY	ROUTE	POST MILES TOTAL PROJECT	SHEET No.	TOTAL SHEETS
12	Ora	73,133	16.6,4.2	88	107

Theresa Gabriel
REGISTERED ELECTRICAL ENGINEER

July 19, 2013
PLANS APPROVAL DATE

REGISTERED PROFESSIONAL ENGINEER
Theresa Aziz Gabriel
No. E15129
Exp. 6-30-14
ELECTRICAL
STATE OF CALIFORNIA

THE STATE OF CALIFORNIA OR ITS OFFICERS OR AGENTS SHALL NOT BE RESPONSIBLE FOR THE ACCURACY OR COMPLETENESS OF SCANNED COPIES OF THIS PLAN SHEET.

TO ACCOMPANY PLANS DATED 06-01-15

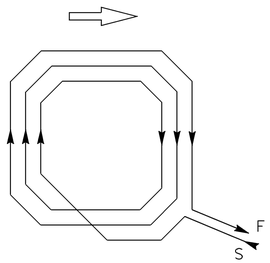

WINDING DETAIL

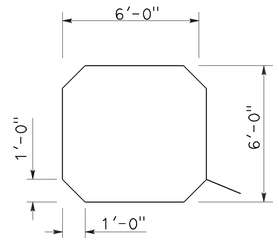

SAWCUT DETAIL

TYPE A LOOP DETECTOR CONFIGURATION

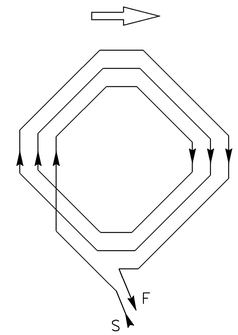

WINDING DETAIL

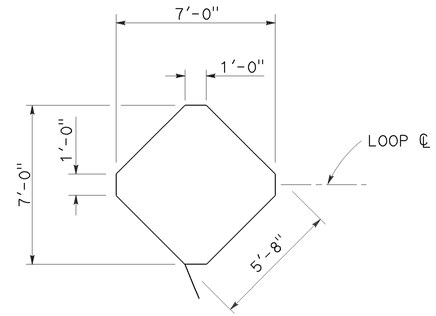

SAWCUT DETAIL

TYPE B LOOP DETECTOR CONFIGURATION

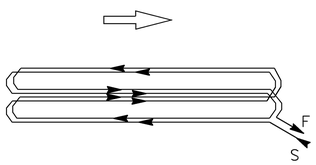

WINDING DETAIL

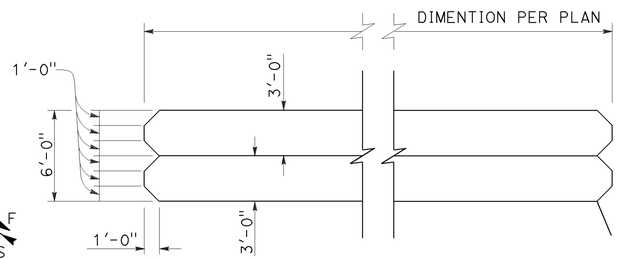

SAWCUT DETAIL

TYPE C LOOP DETECTOR CONFIGURATION

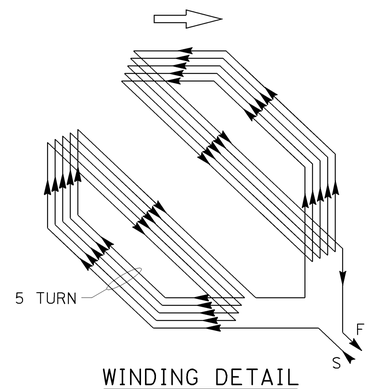

WINDING DETAIL

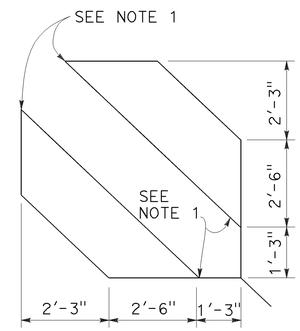

SAWCUT DETAIL

TYPE D LOOP DETECTOR CONFIGURATION

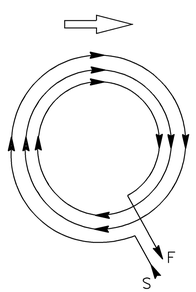

WINDING DETAIL

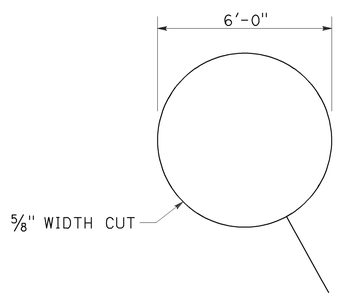

SAWCUT DETAIL

TYPE E LOOP DETECTOR CONFIGURATION

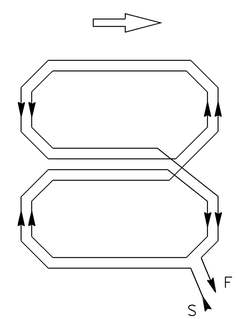

WINDING DETAIL

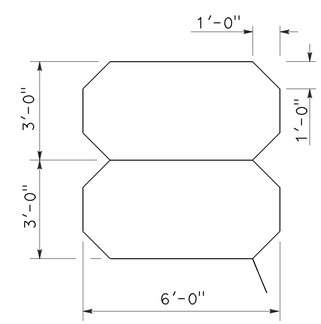

SAWCUT DETAIL

TYPE Q LOOP DETECTOR CONFIGURATION

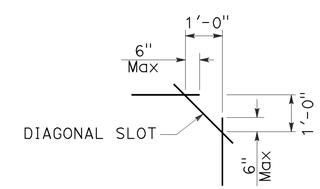

PLAN VIEW OF DIAGONAL SLOT AT CORNERS

NOTES:

1. Round corners of acute angle sawcuts to prevent damage to conductors.
2. Typical distance separating loops from edge to edge is 10' for Type A, B, D and E installation in single lane.

STATE OF CALIFORNIA
DEPARTMENT OF TRANSPORTATION

ELECTRICAL SYSTEMS (DETECTORS)

NO SCALE

RSP ES-5B DATED JULY 19, 2013 SUPERSEDES STANDARD PLAN ES-5B DATED MAY 20, 2011 - PAGE 449 OF THE STANDARD PLANS BOOK DATED 2010.

REVISED STANDARD PLAN RSP ES-5B

2010 REVISED STANDARD PLAN RSP ES-5B

7-9-13

Dist	COUNTY	ROUTE	POST MILES TOTAL PROJECT	SHEET No.	TOTAL SHEETS
12	Ora	73,133	16.6,4.2	89	107

Theresa Gabriel
REGISTERED ELECTRICAL ENGINEER

July 19, 2013
PLANS APPROVAL DATE

REGISTERED PROFESSIONAL ENGINEER Theresa Aziz Gabriel No. E15129 Exp. 6-30-14 ELECTRICAL STATE OF CALIFORNIA

THE STATE OF CALIFORNIA OR ITS OFFICERS OR AGENTS SHALL NOT BE RESPONSIBLE FOR THE ACCURACY OR COMPLETENESS OF SCANNED COPIES OF THIS PLAN SHEET.

TO ACCOMPANY PLANS DATED 06-01-15

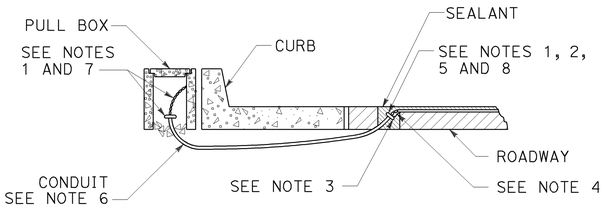

TYPE A
CURB TERMINATION DETAIL

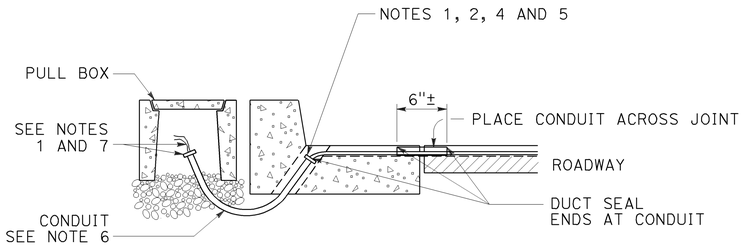

CROSS SECTION

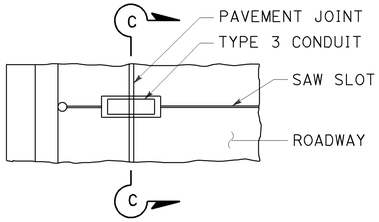

PLAN VIEW

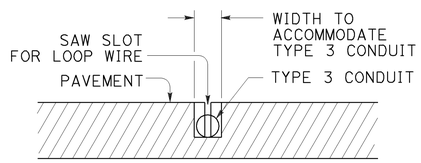

SECTION C-C

TYPE B
CURB TERMINATION DETAIL

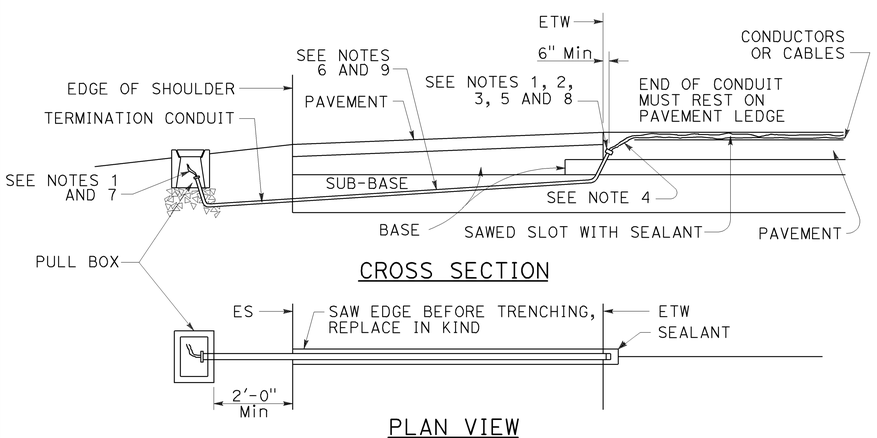

CROSS SECTION

PLAN VIEW

SHOULDER TERMINATION DETAILS

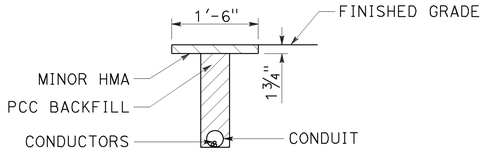

"T" TRENCH
DETAIL T

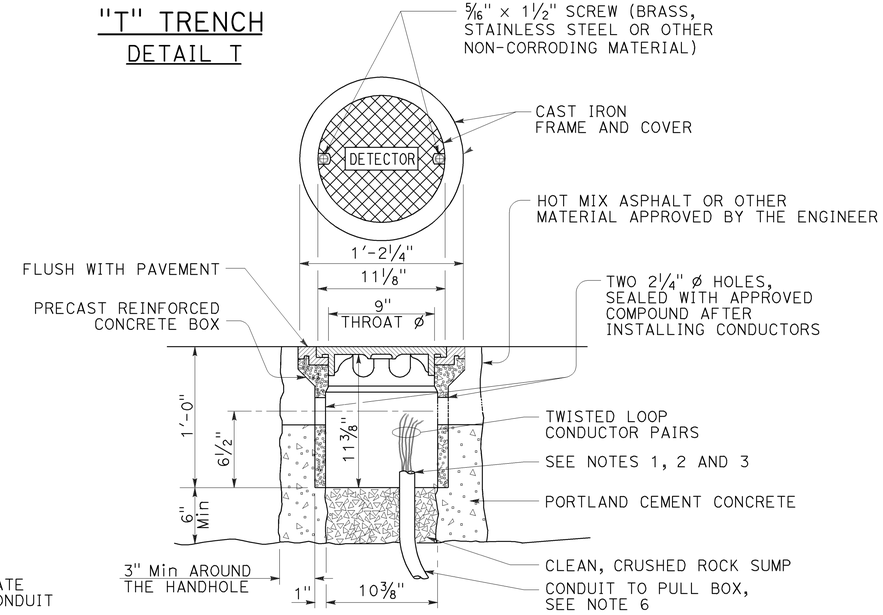

DETECTOR HANDHOLE DETAIL

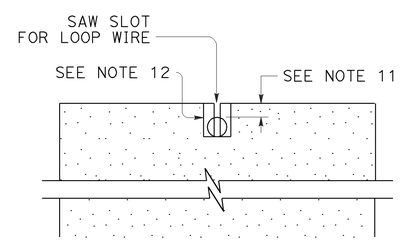

SECTION A-A

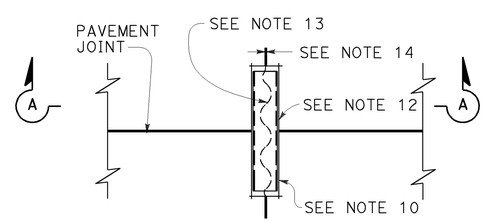

PLAN VIEW

TYPICAL LOOP LEAD-IN DETAIL AT PAVEMENT JOINT

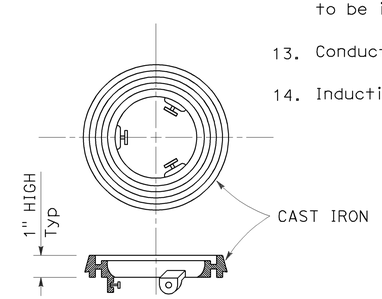

LOCKING GRADE RING

NOTES:

1. Bushing shall be used at end of conduit.
2. Tape detector conductors or cables 3" each side of bushings.
3. Install duct seal compound to each end of termination conduit before installing sealant.
4. Round all sharp edges where detector conductors or cables have to pass.
5. End of conduit shall be 3⅛" below roadway surface.
6. Conduit size / Loop conductors
   - 1"C minimum — 1 to 2 pairs
   - 1½"C minimum — 3 to 4 pairs
   - 2"C minimum — 5 or more pairs
7. Splice detector conductors or cables to detector lead-in-cable.
8. Location of detector handhole when shown on plans.
9. When the shoulder and traveled way are paved with the same material and there is no joint between them, the conduit shall extend only 2'-0" into the shoulder pavement.
10. ¾"C, Type 3 conduit 6" long minimum, plug both ends with duct compound to keep out sealant.
11. ½" Minimum between top of conduit and pavement surface.
12. Sawcut shall not exceed 1" in width and ⅛" longer than conduit to be installed.
13. Conductors with ½" minimum slack inside conduit.
14. Inductive loop detector saw slot.

STATE OF CALIFORNIA
DEPARTMENT OF TRANSPORTATION

ELECTRICAL SYSTEMS (CURB TERMINATION AND HANDHOLE)

NO SCALE

RSP ES-5D DATED JULY 19, 2013 SUPERSEDES STANDARD PLAN ES-5D DATED MAY 20, 2011 - PAGE 451 OF THE STANDARD PLANS BOOK DATED 2010.

REVISED STANDARD PLAN RSP ES-5D

2010 REVISED STANDARD PLAN RSP ES-5D

7-9-13

DIST	COUNTY	ROUTE	POST MILES TOTAL PROJECT	SHEET NO.	TOTAL SHEETS
12	Ora	73,133	16.6,4.2	90	107

Theresa Gabriel
REGISTERED ELECTRICAL ENGINEER

July 19, 2013
PLANS APPROVAL DATE

REGISTERED PROFESSIONAL ENGINEER Theresa Aziz Gabriel No. E15129 Exp. 6-30-14 ELECTRICAL STATE OF CALIFORNIA

THE STATE OF CALIFORNIA OR ITS OFFICERS OR AGENTS SHALL NOT BE RESPONSIBLE FOR THE ACCURACY OR COMPLETENESS OF SCANNED COPIES OF THIS PLAN SHEET.

TO ACCOMPANY PLANS DATED 06-01-15

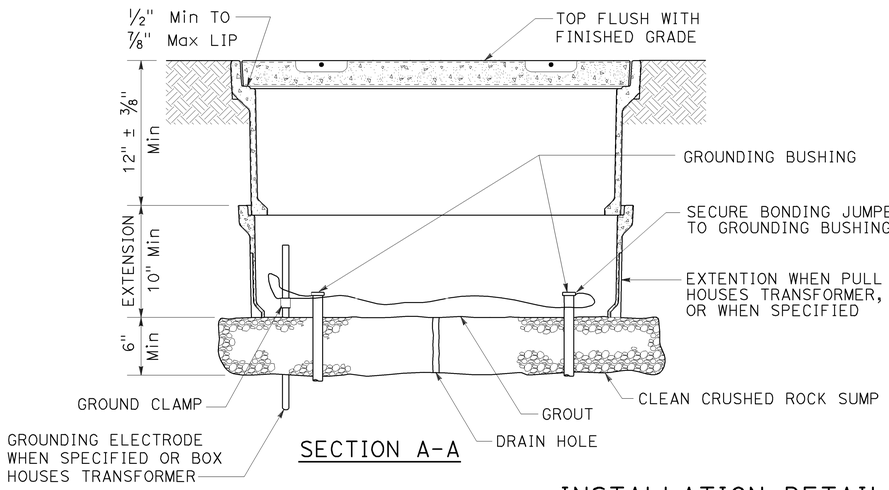

SECTION A-A

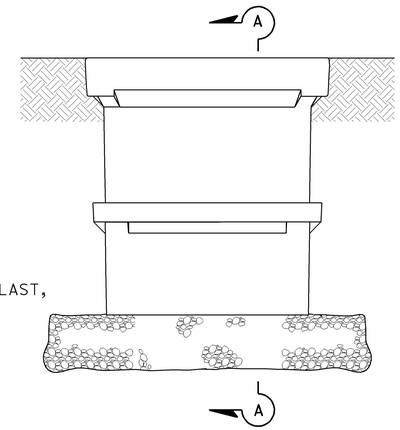

SIDE VIEW

INSTALLATION DETAILS

DETAIL A

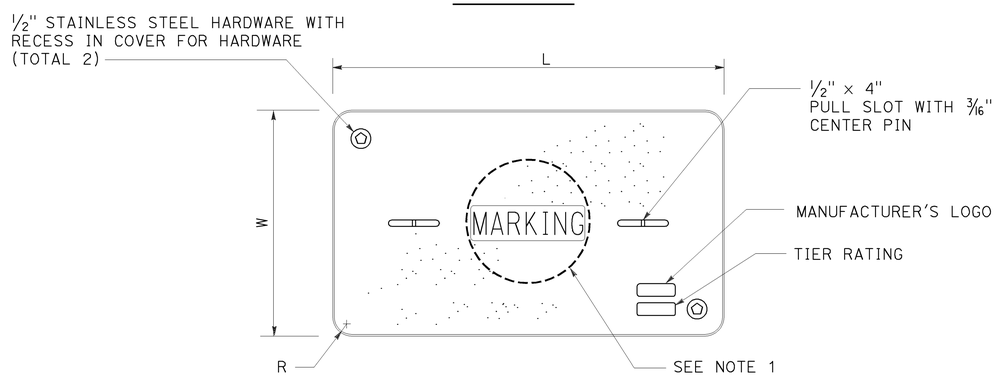

COVER TOP VIEW

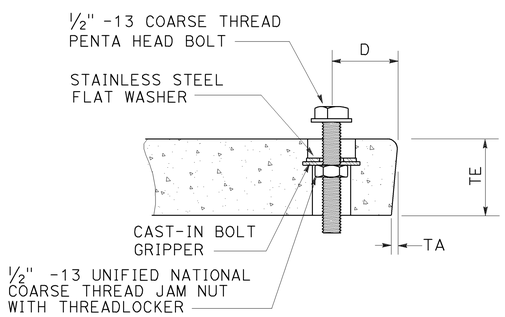

TYPICAL COVER CAPTIVE BOLT

OR SIMILAR

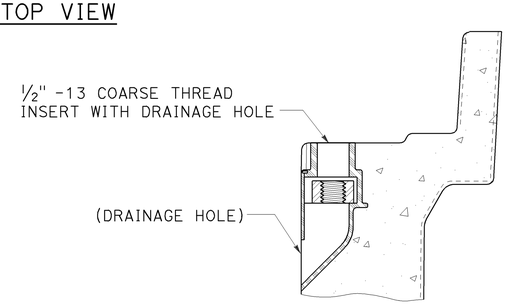

TYPICAL THREADED INSERT

OR SIMILAR

DIMENSION TABLE

PULL BOX	PULL BOX			COVER						
	MINIMUM DEPTH BOX	MINIMUM DEPTH EXTENSION	MAXIMUM WEIGHT	L	W	R	TE	TA	D	MAXIMUM WEIGHT
No. 3½	12"	N/A	40 lb	1′ - 3⅜"	10⅛"	1⅜"	2"	⅛"	1¾"	30 lb
No. 5	12"	10"	55 lb	1′ - 11¼"	1′ - 1¾"	1⅜"	2"	⅛"	1¾"	60 lb
No. 6	12"	10"	70 lb	2′ - 6½"	1′ - 5½"	1⅜"	2"	⅛"	2"	85 lb

NOTES:

1. Pull box covers shall be marked as follows: "SERVICE" Service circuits between service point and service disconnect; "SPRINKLER-CONTROL" sprinkler control circuits, 50 V or less; "CALTRANS" on all pull boxes, except pull boxes marked "SPRINKLER-CONTROL"; and "TELEPHONE" Telephone service;

   A) No. 3½ pull box.
      1) "SIGNAL" - Traffic signal circuits with or without lighting or sign lighting circuits.
      2) "LIGHTING" - Lighting or sign lighting circuits where voltage is under 600 V.

   B) No. 5, 6, 9 or 9A pull box.
      1) "TRAFFIC SIGNAL" - Traffic signal circuits with or without lighting or sign lighting circuits.
      2) "LIGHTING" - Lighting or sign lighting circuits where voltage is under 600 V.
      3) "LIGHTING-HIGH VOLTAGE" - Lighting or sign lighting circuits where voltage is above 600 V.
      4) "IRRIGATION" - Circuits to irrigation controller 120 V or more.
      5) "RAMP METER" - Ramp meter circuits.
      6) "COUNT STATION" - Count or speed monitor circuits.
      7) "COMMUNICATIONS" - Communication circuits.
      8) "TOS COMMUNICATIONS" - TOS communication line.
      9) "TOS POWER" - TOS power.
      10) "TDC POWER" - Telephone demarcation cabinet power.
      11) "CCTV" - Closed circuit television circuits.
      12) "TMS" - Traffic monitoring station circuits.
      13) "CMS" - Changeable message sign circuits.
      14) "HAR" - Highway advisory radio circuits.
      15) "BOOSTER PUMP" - Booster pump circuit.

2. The nominal dimensions of the opening in which the cover sets shall be the same as the cover dimensions except the length and width dimensions shall be ⅛" greater.

3. Covers and boxes shall be interchangeable with California standard male and female gages. When interchanged with a standard male or female gage, the top surfaces shall be flush within ⅛". Top outside radius of covers and pull boxes shall have a ⅛" radius.

4. Pull box extension may be another pull box as long as the bottom edge of the pull box can fit into the cover opening.

5. All dimensions for the cover for non-traffic pull box are nominal values.

STATE OF CALIFORNIA
DEPARTMENT OF TRANSPORTATION

ELECTRICAL SYSTEMS (NON-TRAFFIC PULL BOX)

NO SCALE

RSP ES-8A DATED JULY 19, 2013 SUPERSEDES RSP ES-8A DATED JANUARY 20, 2012 THAT SUPPLEMENTS THE STANDARD PLANS BOOK DATED 2010.

REVISED STANDARD PLAN RSP ES-8A

2010 REVISED STANDARD PLAN RSP ES-8A

7-15-13

Dist	COUNTY	ROUTE	POST MILES TOTAL PROJECT	SHEET No.	TOTAL SHEETS
12	Ora	73,133	16.6,4.2	91	107

Theresa Gabriel
REGISTERED ELECTRICAL ENGINEER

July 19, 2013
PLANS APPROVAL DATE

REGISTERED PROFESSIONAL ENGINEER
Theresa Aziz Gabriel
No. E15129
Exp. 6-30-14
ELECTRICAL
STATE OF CALIFORNIA

THE STATE OF CALIFORNIA OR ITS OFFICERS OR AGENTS SHALL NOT BE RESPONSIBLE FOR THE ACCURACY OR COMPLETENESS OF SCANNED COPIES OF THIS PLAN SHEET.

TO ACCOMPANY PLANS DATED 06-01-15

ISOFOOTCANDLE CURVE - MINIMUM

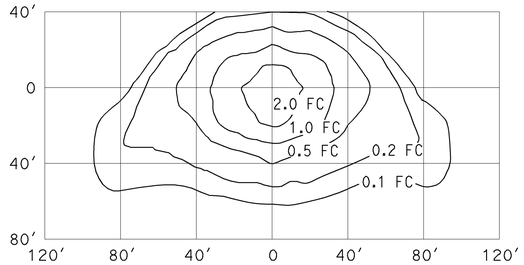

TYPE III MEDIUM CUTOFF

Cutoff Luminaire
34′ Mounting Height
Lamp operated at 22,000 lm
200-W high pressure sodium lamp
ANSI Designation S66

ISOFOOTCANDLE CURVE - MINIMUM

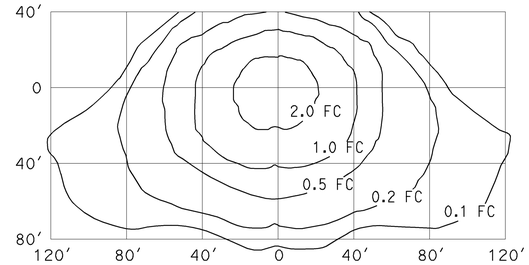

TYPE III MEDIUM CUTOFF

Cutoff Luminaire
40′ Mounting Height
Lamp operated at 37,000 lm
310-W high pressure sodium lamp
ANSI Designation S67

ISOFOOTCANDLE CURVE - MINIMUM

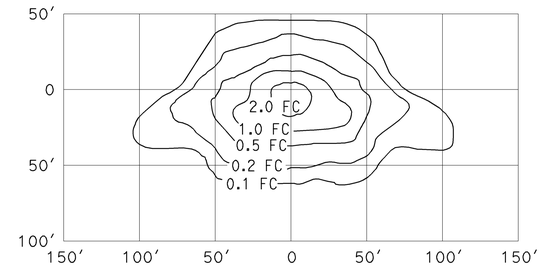

TYPE III MEDIUM CUTOFF

Cutoff Luminaire
30′ Mounting Height
Lamp operated at 16,000 lm
150-W high pressure sodium lamp
ANSI Designation S55

ISOFOOTCANDLE CURVE - MINIMUM

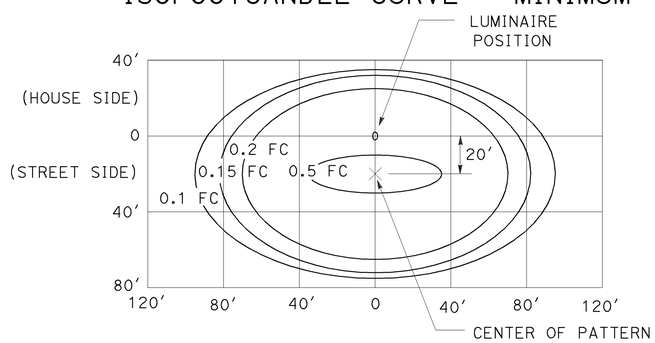

LED LUMINAIRE ROADWAY 1

165-W at 34′ Mounting Height

ISOFOOTCANDLE CURVE - MINIMUM

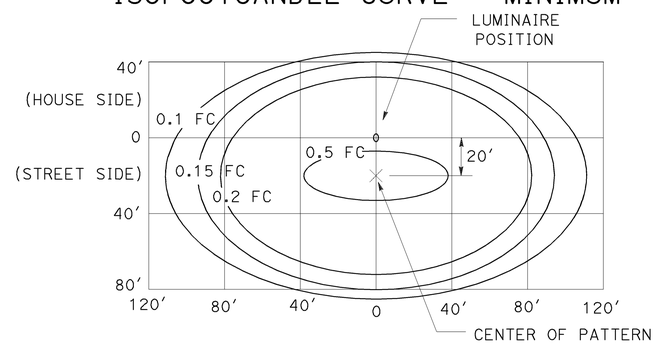

LED LUMINAIRE ROADWAY 2

235-W at 40′ Mounting Height

ISOFOOTCANDLE CURVE - MINIMUM

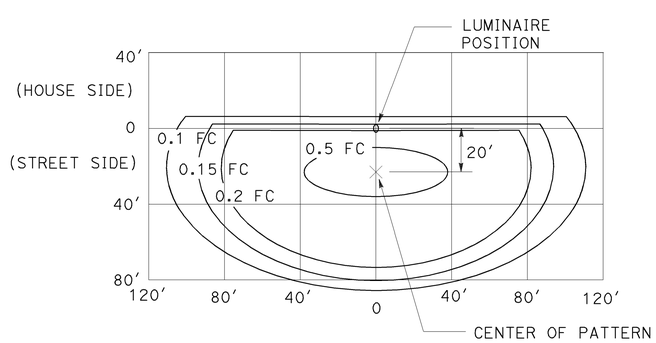

LED LUMINAIRE ROADWAY 3

235-W at 40′ Mounting Height
with back side control

ISOFOOTCANDLE CURVE - MINIMUM

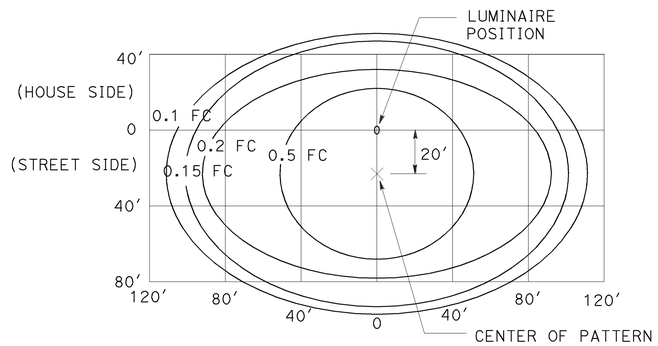

LED LUMINAIRE ROADWAY 4

300-W at 40′ Mounting Height

ISOFOOTCANDLE CURVE - MINIMUM

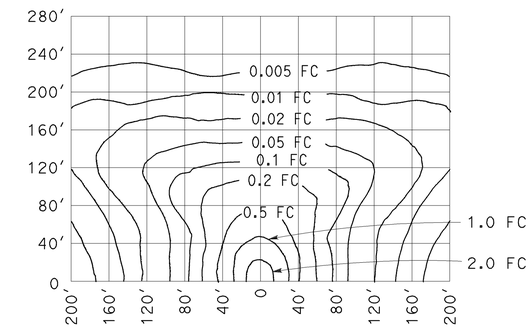

LOW PRESSURE SODIUM LUMINAIRE

40′ Mounting Height
Lamp operated at 33,000 lm
180-W low pressure sodium lamp

STATE OF CALIFORNIA
DEPARTMENT OF TRANSPORTATION

ELECTRICAL SYSTEMS (ISOFOOTCANDLE DIAGRAMS)

NO SCALE

RSP ES-10A DATED JULY 19, 2013 SUPERSEDES RSP ES-10A DATED JULY 20, 2012 THAT SUPPLEMENTS THE STANDARD PLANS BOOK DATED 2010.

REVISED STANDARD PLAN RSP ES-10A

2010 REVISED STANDARD PLAN RSP ES-10A

7-9-13

Dist	COUNTY	ROUTE	POST MILES TOTAL PROJECT	SHEET No.	TOTAL SHEETS
12	Ora	73,133	16.6,4.2	92	107

REGISTERED CIVIL ENGINEER

July 19, 2013
PLANS APPROVAL DATE

REGISTERED PROFESSIONAL ENGINEER
Stanley P. Johnson
No. C57793
Exp. 3-31-14
CIVIL
STATE OF CALIFORNIA

THE STATE OF CALIFORNIA OR ITS OFFICERS OR AGENTS SHALL NOT BE RESPONSIBLE FOR THE ACCURACY OR COMPLETENESS OF SCANNED COPIES OF THIS PLAN SHEET.

TO ACCOMPANY PLANS DATED 06-01-15

STANDARD TYPE	SETBACK (DIMENSION A)
32	30'-0" (Min)
31	20'-0" (Min)
15, 15D, 15-SB, 21, 21D, 30	ARM LENGTH (Min)

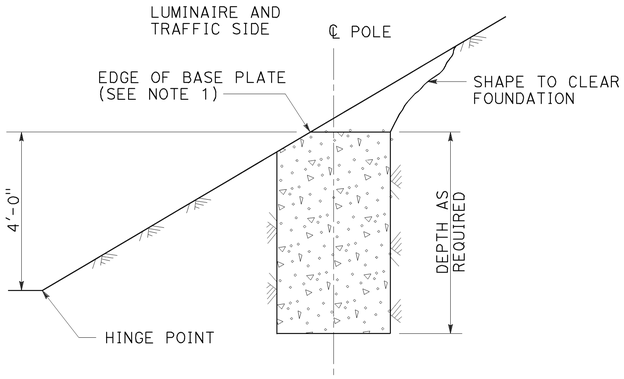

CUT SLOPES
STEEPER THAN 4:1,
LESS THAN 2:1
DETAIL A-1
See Note 2 and 3

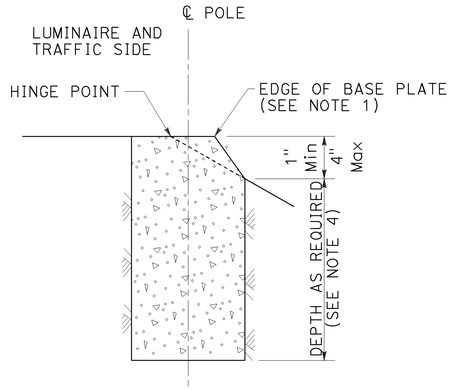

FILL SLOPES
STEEPER THAN 4:1,
LESS THAN 2:1
DETAIL A-2
See Note 2 and 3

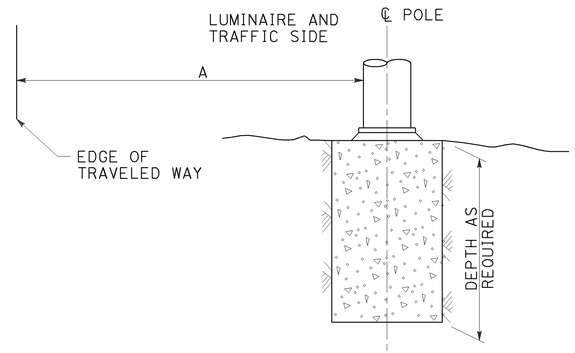

FLAT SECTIONS, CUT OR FILL SLOPES
4:1 OR FLATTER
DETAIL A-3
See Note 2

FOUNDATIONS ADJACENT TO ALL ROADWAYS EXCEPT
IN SIDEWALK, MEDIAN AND ISLAND AREAS
DETAIL A

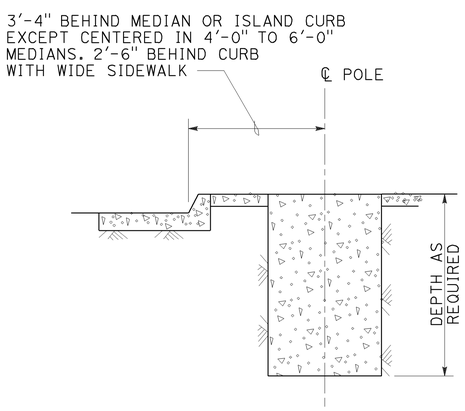

MEDIAN, ISLAND
OR WIDE SIDEWALK
DETAIL B-1
7' Wide and wider

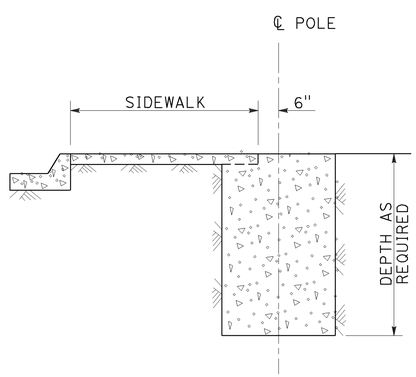

NARROW SIDEWALK
DETAIL B-2
Less than 7' wide

FOUNDATIONS IN SIDEWALK, MEDIAN AND ISLAND AREAS
DETAIL B

NOTES:

1. Where a portion of the foundation is above grade, the top edges shall have a 1" chamfer.
2. Slopes shall be horizontal to vertical ratio (Horizontal : Vertical).
3. Horizontal setbacks on cut and fill slopes steeper than 4:1 shall not exceed the distance shown for flat sections.
4. CIDH embedment depth shall be increased beyond standard depths by the diameter of the CIDH.

STATE OF CALIFORNIA
DEPARTMENT OF TRANSPORTATION

ELECTRICAL SYSTEMS (FOUNDATION INSTALLATIONS)

NO SCALE

RSP ES-11 DATED JULY 19, 2013 SUPERSEDES STANDARD PLAN ES-11
DATED MAY 20, 2011 - PAGE 488 OF THE STANDARD PLANS BOOK DATED 2010.

REVISED STANDARD PLAN RSP ES-11

2010 REVISED STANDARD PLAN RSP ES-11

7-9-13

DIST	COUNTY	ROUTE	POST MILES TOTAL PROJECT	SHEET No.	TOTAL SHEETS
12	Ora	73,133	16.6,4.2	93	107

REGISTERED CIVIL ENGINEER 5-20-15 DATE

06-01-15
PLANS APPROVAL DATE

REGISTERED PROFESSIONAL ENGINEER Hung Po Yang No. C66376 Exp. 06-30-16 CIVIL STATE OF CALIFORNIA

The State of California or its officers or agents shall not be responsible for the accuracy or completeness of scanned copies of this plan sheet.

NOTES:

1. For "INDEX TO PLANS" see "INDEX TO PLANS" sheet.
2. For "TYPICAL SECTION" see "GENERAL PLAN NO. 2" sheet.
3. For Structural Details see "STRUCTURE PLAN NO. 1", "STRUCTURE PLAN NO. 2", "STRUCTURE PLAN NO. 3", "STRUCTURE PLAN NO. 4" and "STRUCTURE PLAN NO. 5" sheets.
4. Fractured Rib Texture not shown.
5. For information on Electrolier see "ROADWAY PLANS".

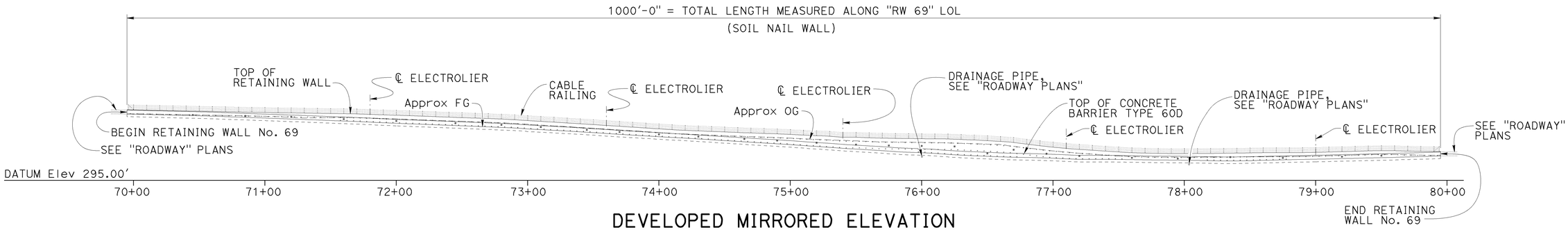

DEVELOPED MIRRORED ELEVATION

1" = 40'-0"

QUANTITIES

STRUCTURE EXCAVATION (SOIL NAIL WALL)	445	CY
STRUCTURE BACKFILL (SOIL NAIL WALL)	74	CY
SOIL NAIL	5,584	LF
STRUCTURAL CONCRETE, RETAINING WALL	246	CY
FRACTURED RIB TEXTURE	3,961	SQFT
BAR REINFORCING STEEL (RETAINING WALL)	22,292	LB
STRUCTURAL SHOTCRETE	70	CY
MINOR CONCRETE (GUTTER AND APRON) (LF)	1,000	LF
CABLE RAILING	1,000	LF
CONCRETE BARRIER (TYPE 60D)	1,000	LF

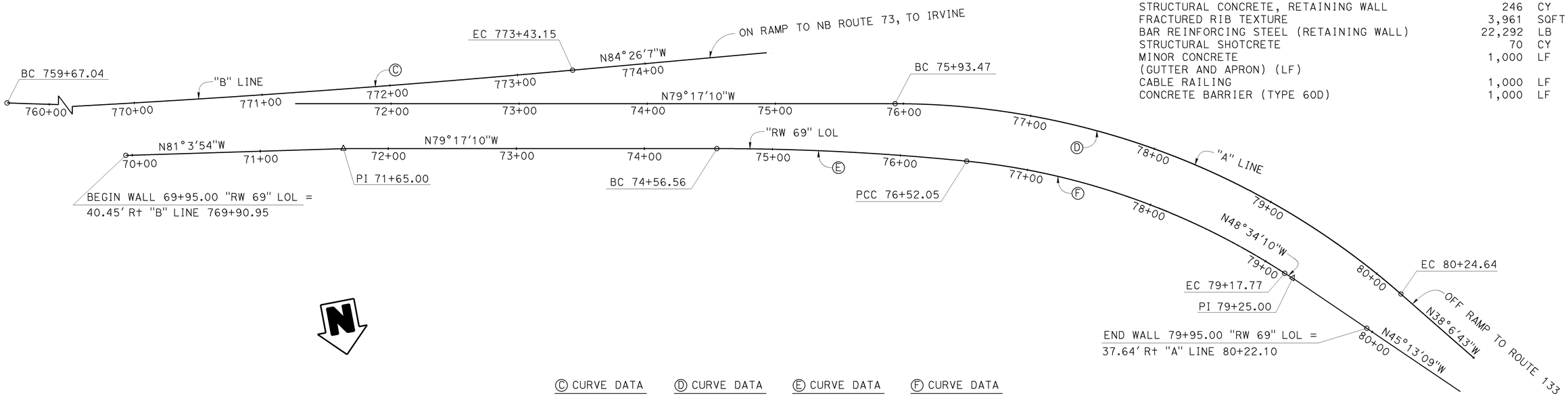

Ⓒ CURVE DATA	Ⓓ CURVE DATA	Ⓔ CURVE DATA	Ⓕ CURVE DATA
R = 11 146.85'	R = 600.00'	R = 1945.00'	R = 558.00'
Δ = 7°04'24"	Δ = 41°10'27"	Δ = 5°45'31"	Δ = 27°17'05"
T = 688.93'	T = 225.37'	T = 97.83'	T = 135.43'
L = 1 376.11'	L = 431.17'	L = 195.49'	L = 265.72'

PLAN

1" = 40'-0"

Jose Higareda
DESIGN ENGINEER

	BY	CHECKED
DESIGN	Paul Yang	Jose Higareda
DETAILS	Herman Mauroschadt	Jose Higareda
QUANTITIES	Paul Yang	Fred Feng
LAYOUT	Paul Yang	Jose Higareda
SPECIFICATIONS	John Jiang	PLANS AND SPECS COMPARED Mingxig Pan

ORIGINAL SCALE IN INCHES FOR REDUCED PLANS 0 1 2 3

STATE OF CALIFORNIA
DEPARTMENT OF TRANSPORTATION

DIVISION OF ENGINEERING SERVICES
STRUCTURE DESIGN
DESIGN BRANCH 15

BRIDGE NO. 55E0170
POST MILE 16.6

RETAINING WALL NO. 69
GENERAL PLAN NO. 1

UNIT: 3604
PROJECT NUMBER & PHASE: 1212000017
CONTRACT NO.: 12-0M340

DISREGARD PRINTS BEARING EARLIER REVISION DATES

REVISION DATES 12-2-14 4-24-15 3-24-15 4-23-15

SHEET 1 OF 15

USERNAME => s132486 DATE PLOTTED => 29-MAY-2015 TIME PLOTTED => 13:29

STRUCTURES DESIGN GENERAL PLAN SHEET (ENGLISH) (REV.09-01-10)

FILE => 55e0170-b-gp01.dgn

DIST	COUNTY	ROUTE	POST MILES TOTAL PROJECT	SHEET No.	TOTAL SHEETS
12	Ora	73,133	16.6,4.2	94	107

REGISTERED CIVIL ENGINEER 5-20-15 DATE

06-01-15
PLANS APPROVAL DATE

REGISTERED PROFESSIONAL ENGINEER Hung Po Yang No. C66376 Exp. 06-30-16 CIVIL STATE OF CALIFORNIA

The State of California or its officers or agents shall not be responsible for the accuracy or completeness of scanned copies of this plan sheet.

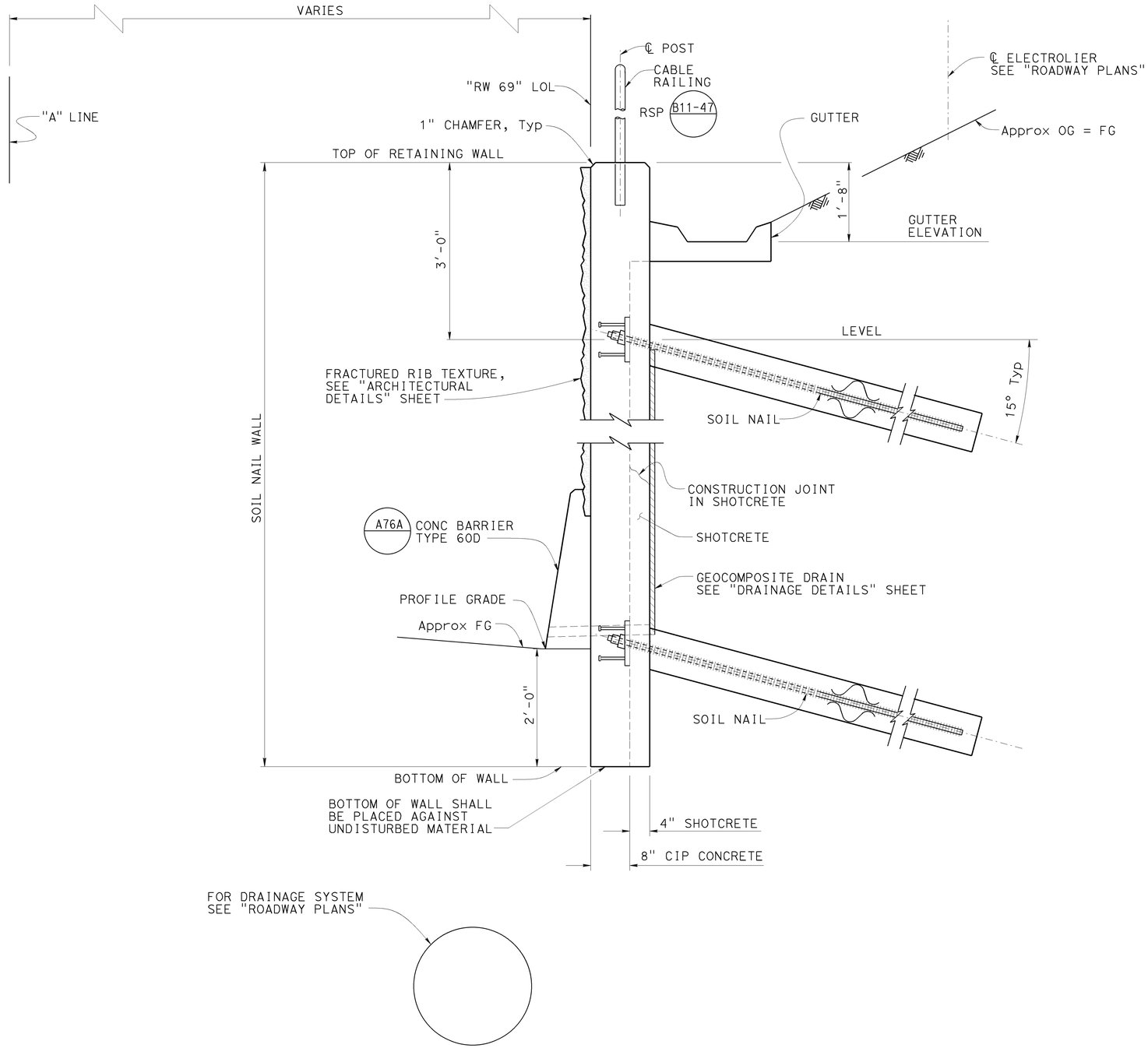

TYPICAL SECTION

NO SCALE

Jose Higareda DESIGN ENGINEER	DESIGN	BY Paul Yang	CHECKED Jose Higareda			
	DETAILS	BY Herman Mauroschadt	CHECKED Jose Higareda	LAYOUT	BY Paul Yang	CHECKED Jose Higareda
	QUANTITIES	BY Paul Yang	CHECKED Fred Feng	SPECIFICATIONS	BY John Jiang	PLANS AND SPECS COMPARED Mingxia Pan

ORIGINAL SCALE IN INCHES FOR REDUCED PLANS 0 1 2 3

STATE OF CALIFORNIA
DEPARTMENT OF TRANSPORTATION

DIVISION OF ENGINEERING SERVICES
STRUCTURE DESIGN
DESIGN BRANCH 15

UNIT: 3604
PROJECT NUMBER & PHASE: 1212000017

BRIDGE NO. 55E0170
POST MILE 16.6

CONTRACT NO.: 12-0M340

RETAINING WALL NO. 69
GENERAL PLAN NO. 2

DISREGARD PRINTS BEARING EARLIER REVISION DATES

REVISION DATES 2-11-15 3-12-15 4-24-15 3-3-16

SHEET 2 OF 15

STRUCTURES DESIGN GENERAL PLAN SHEET (ENGLISH) (REV.09-01-10)

FILE => 55e0170-b-gp02.dgn

USERNAME => s132486 DATE REDRAWN => 29-MAY-2015 TIME REDRAWN => 13:29

DIST	COUNTY	ROUTE	POST MILES TOTAL PROJECT	SHEET No.	TOTAL SHEETS
12	Ora	73,133	16.6,4.2	95	107

REGISTERED CIVIL ENGINEER 5-20-15 DATE

06-01-15
PLANS APPROVAL DATE

REGISTERED PROFESSIONAL ENGINEER Hung Po Yang No. C66376 Exp. 06-30-16 CIVIL STATE OF CALIFORNIA

The State of California or its officers or agents shall not be responsible for the accuracy or completeness of scanned copies of this plan sheet.

INDEX TO PLANS

SHEET NO.	TITLE
1	GENERAL PLAN NO. 1
2	GENERAL PLAN NO. 2
3	INDEX TO PLANS
4	STRUCTURE PLAN NO. 1
5	STRUCTURE PLAN NO. 2
6	STRUCTURE PLAN NO. 3
7	STRUCTURE PLAN NO. 4
8	STRUCTURE PLAN NO. 5
9	SOIL NAIL WALL DETAILS NO. 1
10	SOIL NAIL WALL DETAILS NO. 2
11	ARCHITECTURAL DETAILS
12	DRAINAGE DETAILS NO. 1
13	DRAINAGE DETAILS NO. 2
14	DRAINAGE DETAILS NO. 3
15	DRAINAGE DETAILS NO. 4

STANDARD PLANS DATED 2010

A10A	ABBREVIATIONS (SHEET 1 OF 2)
RSP A10B	ABBREVIATIONS (SHEET 2 OF 2)
A10C	LINES AND SYMBOLS (SHEET 1 OF 3)
A10E	LINES AND SYMBOLS (SHEET 3 OF 3)
A76A	CONCRETE BARRIER TYPE 60
RSP B11-47	CABLE RAILING
D75B	CONCRETE PIPE INLETS
RSP D77B	GRATE DETAILS NO. 2

STANDARD PLAN SHEET NO.

DETAIL NO.

GENERAL NOTES

DESIGN:

Federal Highway Administration Publication Geotechnical Engineering Circular No. 7
Soil Nail Walls, Publication No. FHWA-IF-03-017

LIVE LOADING:

No Live Loading

REINFORCED CONCRETE:

fy = 60 ksi (Yield Strength of Reinforcement)
f'c = 3.6 ksi (Compressive Strength at 28 days)

STRUCTURAL SHORTCRETE:

f'c = 3.6 ksi
fy = 65 ksi (ASTM A185 plain welded wire reinforcement)
fy = 60 ksi (ASTM A706 waler bar reinforcement)

STRUCTURAL STEEL (BEARING PLATES):

ASTM Designation: A572, fy = 50 ksi

STUDS:

ASTM Designation: A108, fy = 55 ksi

SOIL NAILS:

ASTM Designation: A615/A615M, fy = 75 ksi

SOIL PARAMETERS - REFER TO ASSOCIATED GEOTECHNICAL REPORT:

GROUT:

f'c = 3000 psi at 28 Days (ASTM C109)

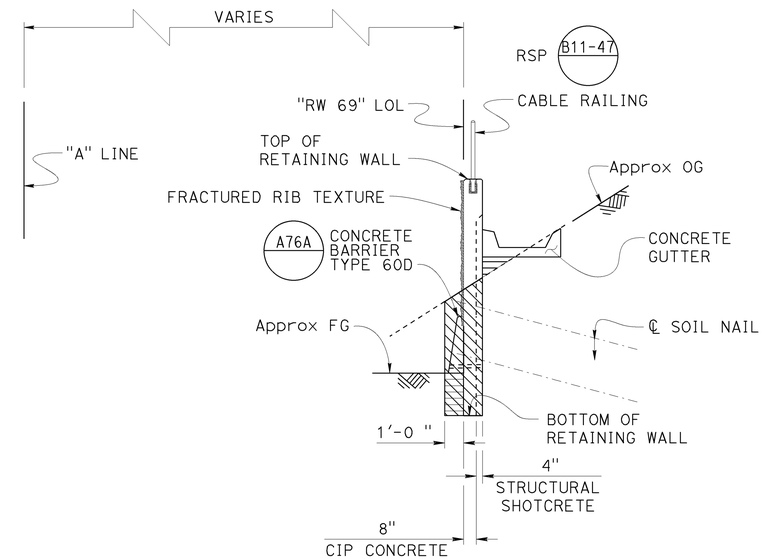

LEGEND:

Denotes Structure Excavation (Soil Nail Wall)

Denotes Structure Backfill (Soil Nail Wall)

TYPICAL SECTION PAY LIMITS FOR STRUCTURE EXCAVATION AND BACKFILL

NO SCALE

SOIL NAIL WALL DESIGN TABLE

Wall Zone	Station (RW LOL)	Minimum Nail Embedment Length (ft)	Maximum Nail Spacing Vertical (ft)	Maximum Nail Spacing Horizontal (ft)	Pullout Resistance Q_d (lb/ft)	Minimum Threaded Bar Size	Minimum Allowable Facing Resistance (Static/Seismic)
1	69+95 to 72+85	16	5	5	2,720	#8	(28/38) kips
2	72+85 to 75+25	16	5	5	2,720	#8	(28/38) kips
3	75+25 to 77+25	16	5	5	2,720	#8	(28/38) kips
4	77+25 to 79+95	16	5	5	2,720	#8	(28/38) kips

NOTE:
THE CONTRACTOR MUST VERIFY ALL CONTROLLING FIELD DIMENSIONS BEFORE ORDERING OR FABRICATING ANY MATERIAL.

	BY	CHECKED
DESIGN	Paul Yang	Jose Higareda
DETAILS	Herman Mauroschadt	Jose Higareda
QUANTITIES	Paul Yang	Fred Feng

STATE OF CALIFORNIA
DEPARTMENT OF TRANSPORTATION

DIVISION OF ENGINEERING SERVICES
STRUCTURE DESIGN
DESIGN BRANCH 15

BRIDGE NO. 55E0170
POST MILE 16.6

RETAINING WALL NO. 69
INDEX TO PLANS

STRUCTURES DESIGN DETAIL SHEET (ENGLISH) (REV. 09-01-10)

ORIGINAL SCALE IN INCHES FOR REDUCED PLANS 0 1 2 3

UNIT: 3604
PROJECT NUMBER & PHASE: 1212000017
CONTRACT NO.: 12-0M340

DISREGARD PRINTS BEARING EARLIER REVISION DATES

REVISION DATES 2-18-15 3-12-15 4-24-15 3-24-15

SHEET 3 OF 15

FILE => 55e0170-b-itp.dgn

USERNAME => s132486 DATE PLOTTED => 29-MAY-2015 TIME PLOTTED => 13:30

DIST	COUNTY	ROUTE	POST MILES TOTAL PROJECT	SHEET No.	TOTAL SHEETS
12	Ora	73,133	16.6,4.2	96	107

REGISTERED CIVIL ENGINEER 5-20-15 DATE

06-01-15
PLANS APPROVAL DATE

REGISTERED PROFESSIONAL ENGINEER Hung Po Yang No. C66376 Exp. 06-30-16 CIVIL STATE OF CALIFORNIA

The State of California or its officers or agents shall not be responsible for the accuracy or completeness of scanned copies of this plan sheet.

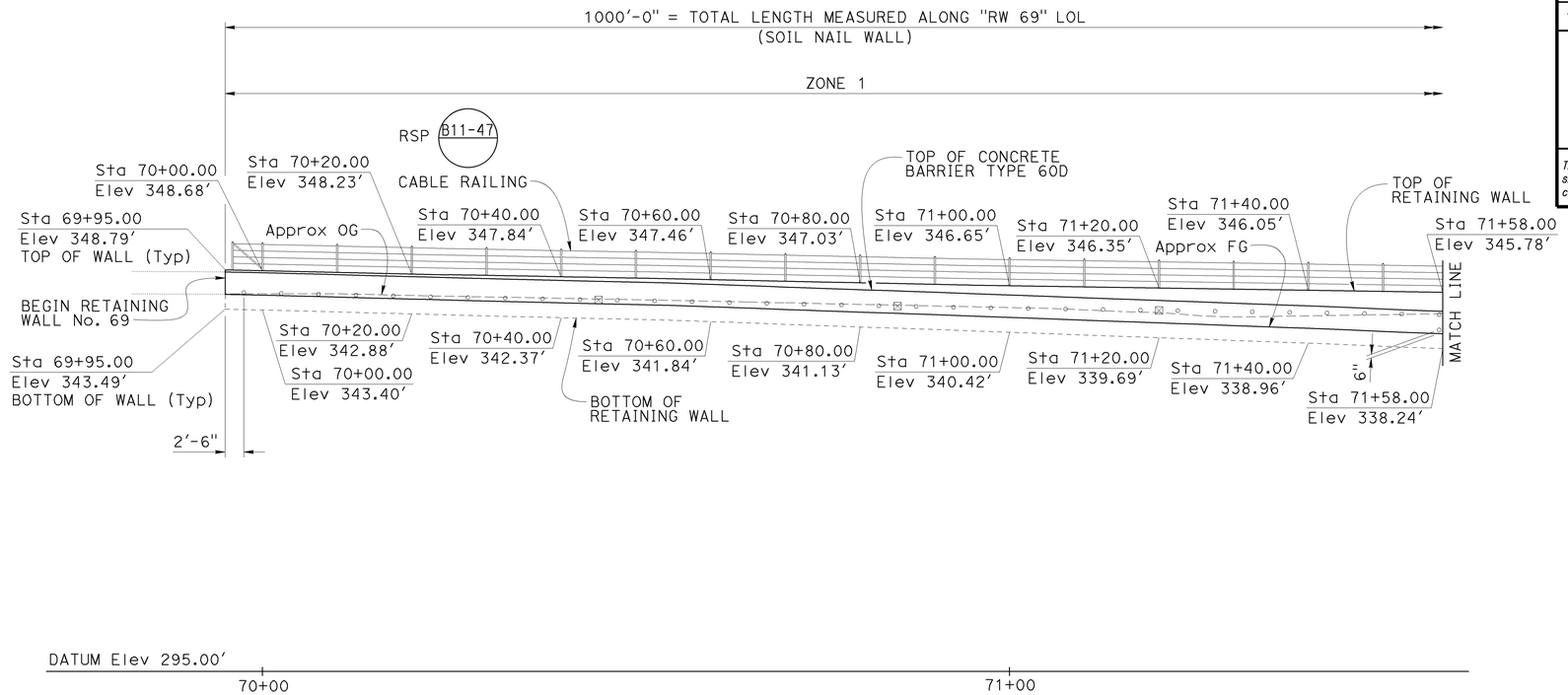

DEVELOPED MIRRORED ELEVATION

1" = 10'-0"

LEGEND:

- ◦ Indicates Location of Production Soil Nail Assembly (Total 34 this sheet)
- ⊠ Indicates Location of Proof Test Nail (Total 3 this sheet)

NOTES:

1. See "GENERAL PLAN NO. 1" sheet for "RW 69" LOL Alignment information.
2. Fractured Rib Texture not shown.

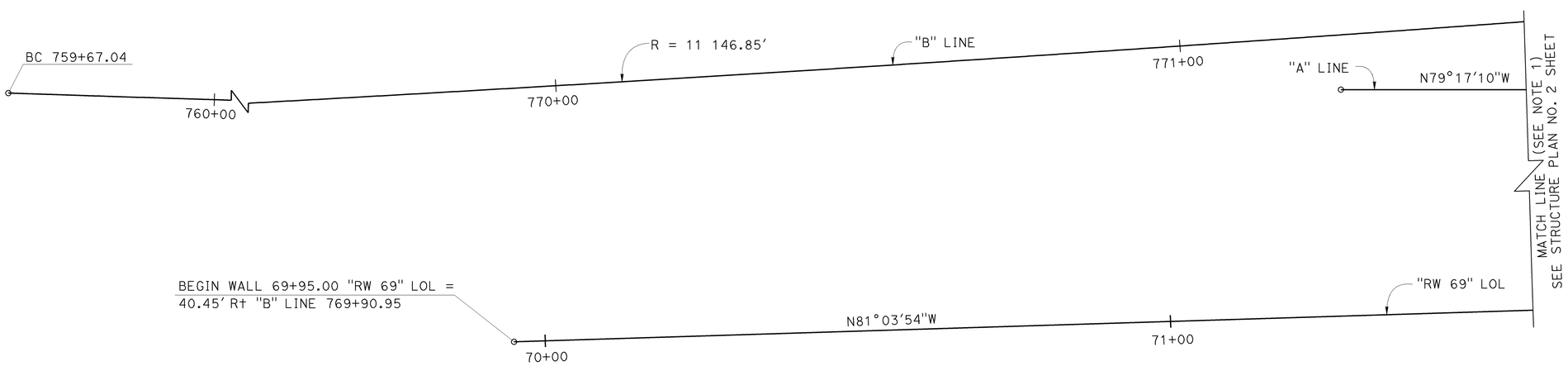

NOTE:
THE CONTRACTOR MUST VERIFY ALL CONTROLLING FIELD DIMENSIONS BEFORE ORDERING OR FABRICATING ANY MATERIAL.

PLAN

1" = 10'-0"

	BY	CHECKED
DESIGN	Paul Yang	Jose Higareda
DETAILS	Herman Mauroschadt	Jose Higareda
QUANTITIES	Paul Yang	Fred Feng

STATE OF CALIFORNIA
DEPARTMENT OF TRANSPORTATION

DIVISION OF ENGINEERING SERVICES
STRUCTURE DESIGN
DESIGN BRANCH 15

BRIDGE NO. 55E0170
POST MILE 16.6

RETAINING WALL NO. 69
STRUCTURE PLAN NO. 1

STRUCTURES DESIGN DETAIL SHEET (ENGLISH) (REV. 09-01-10)

ORIGINAL SCALE IN INCHES FOR REDUCED PLANS 0 1 2 3

UNIT: 3604
PROJECT NUMBER & PHASE: 1212000017
CONTRACT NO.: 12-0M340

DISREGARD PRINTS BEARING EARLIER REVISION DATES

REVISION DATES: 12-2-14 3-28-15 3-30-15 4-24-15

SHEET 4 OF 15

FILE => 55e0170-c-sp01.dgn

USERNAME => s132486 DATE PLOTTED => 29-MAY-2015 TIME PLOTTED => 13:30

DIST	COUNTY	ROUTE	POST MILES TOTAL PROJECT	SHEET No.	TOTAL SHEETS
12	Ora	73,133	16.6,4.2	97	107

REGISTERED CIVIL ENGINEER 5-20-15 DATE

06-01-15
PLANS APPROVAL DATE

REGISTERED PROFESSIONAL ENGINEER Hung Po Yang No. C66376 Exp. 06-30-16 CIVIL STATE OF CALIFORNIA

The State of California or its officers or agents shall not be responsible for the accuracy or completeness of scanned copies of this plan sheet.

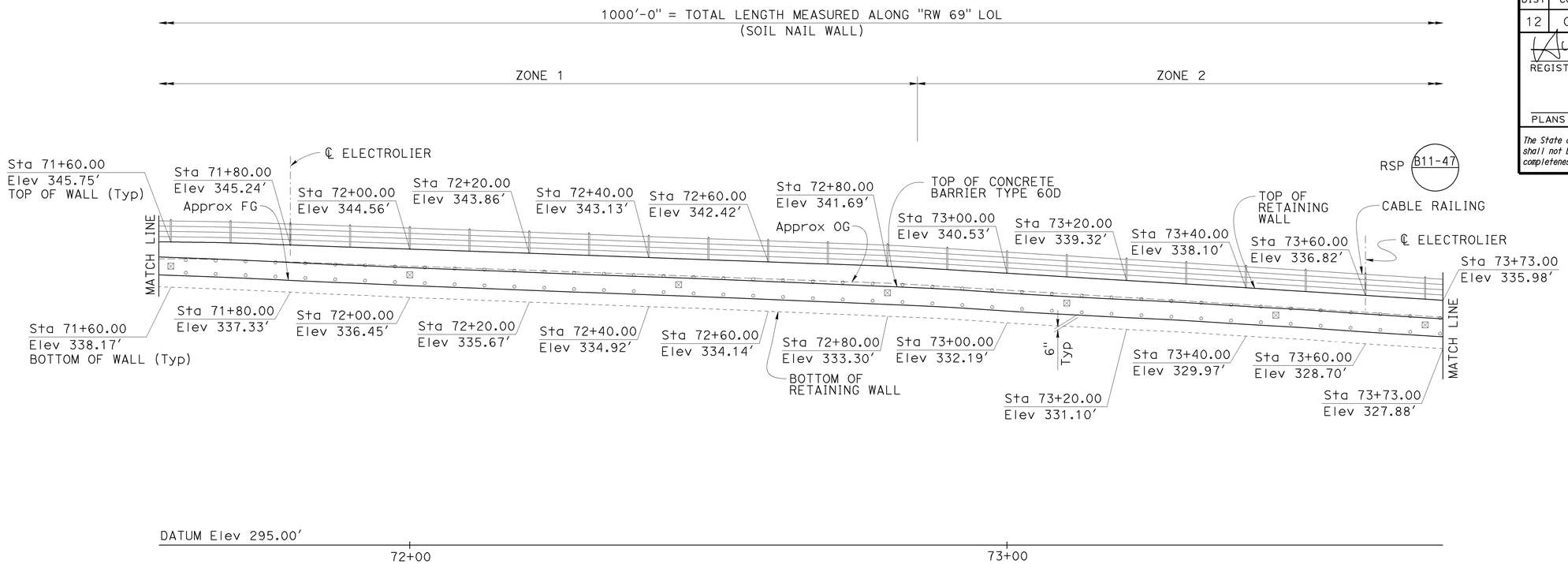

DEVELOPED MIRRORED ELEVATION

1" = 10'-0"

NOTES:

1. See "GENERAL PLAN NO. 1" sheet for "RW 69" LOL Alignment information.
2. "B" Line not shown for clarity.
3. Fractured Rib Texture not shown.

LEGEND:

- ◦ Indicates Location of Production Soil Nail Assembly (Total 86 this sheet)
- ⊠ Indicates Location of Proof Test Nail (Total 7 this sheet)

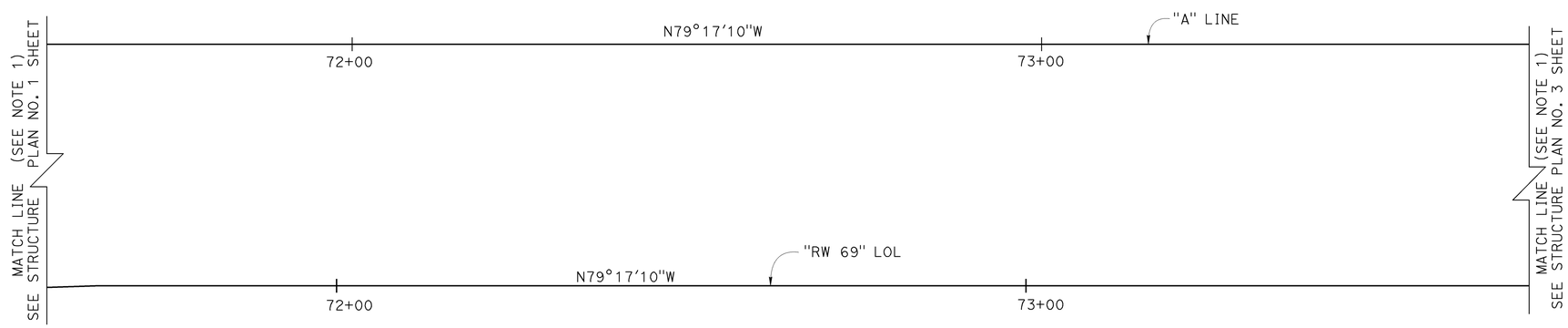

NOTE:
THE CONTRACTOR MUST VERIFY ALL CONTROLLING FIELD DIMENSIONS BEFORE ORDERING OR FABRICATING ANY MATERIAL.

PLAN

1" = 10'-0"

	BY	CHECKED
DESIGN	Paul Yang	Jose Higareda
DETAILS	Herman Mauroschadt	Jose Higareda
QUANTITIES	Paul Yang	Fred Feng

STATE OF CALIFORNIA
DEPARTMENT OF TRANSPORTATION

DIVISION OF ENGINEERING SERVICES
STRUCTURE DESIGN
DESIGN BRANCH 15

BRIDGE NO. 55E0170
POST MILE 16.6

RETAINING WALL NO. 69
STRUCTURE PLAN NO. 2

STRUCTURES DESIGN DETAIL SHEET (ENGLISH) (REV. 09-01-10)

ORIGINAL SCALE IN INCHES FOR REDUCED PLANS 0 1 2 3

UNIT: 3604
PROJECT NUMBER & PHASE: 1212000017
CONTRACT NO.: 12-0M340

DISREGARD PRINTS BEARING EARLIER REVISION DATES

REVISION DATES 12-2-14 3-24-15 3-30-15 3-16-15

SHEET 5 OF 15

FILE => 55e0170-c-sp02.dgn

USERNAME => s132486 DATE PLOTTED => 29-MAY-2015 TIME PLOTTED => 13:33

DIST	COUNTY	ROUTE	POST MILES TOTAL PROJECT	SHEET No.	TOTAL SHEETS
12	Ora	73,133	16.6,4.2	98	107

REGISTERED CIVIL ENGINEER 5-20-15 DATE

06-01-15
PLANS APPROVAL DATE

REGISTERED PROFESSIONAL ENGINEER Hung Po Yang No. C66376 Exp. 06-30-16 CIVIL STATE OF CALIFORNIA

The State of California or its officers or agents shall not be responsible for the accuracy or completeness of scanned copies of this plan sheet.

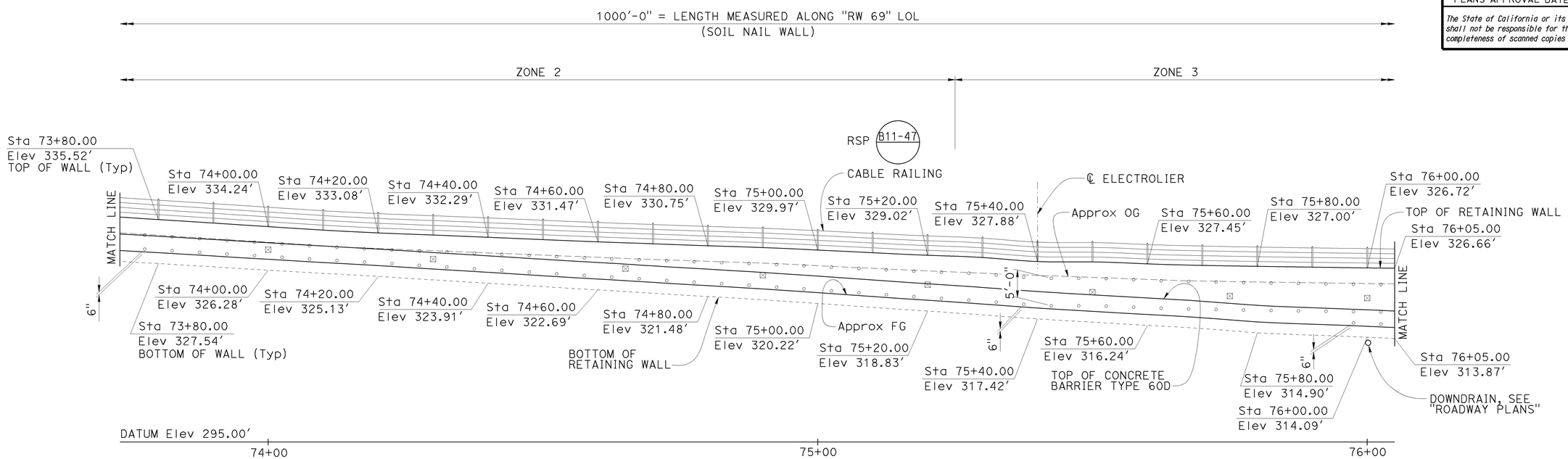

DEVELOPED MIRRORED ELEVATION

1" = 10'-0"

NOTES:

1. See "GENERAL PLAN NO. 1" sheet for "RW 69" LOL Alignment information.
2. "B" Line not shown for clarity.
3. For "MODIFIED GUTTER AT APRON" details at Downdrain locations see "DRAINAGE DETAILS NO. 3" and "DRAINAGE DETAILS NO. 4" sheets.
4. Fractured Rib Texture not shown.

LEGEND:

- ◦ Indicates Location of Production Soil Nail Assembly (Total 94 this sheet)
- ⊠ Indicates Location of Proof Test Nail (Total 8 this sheet)

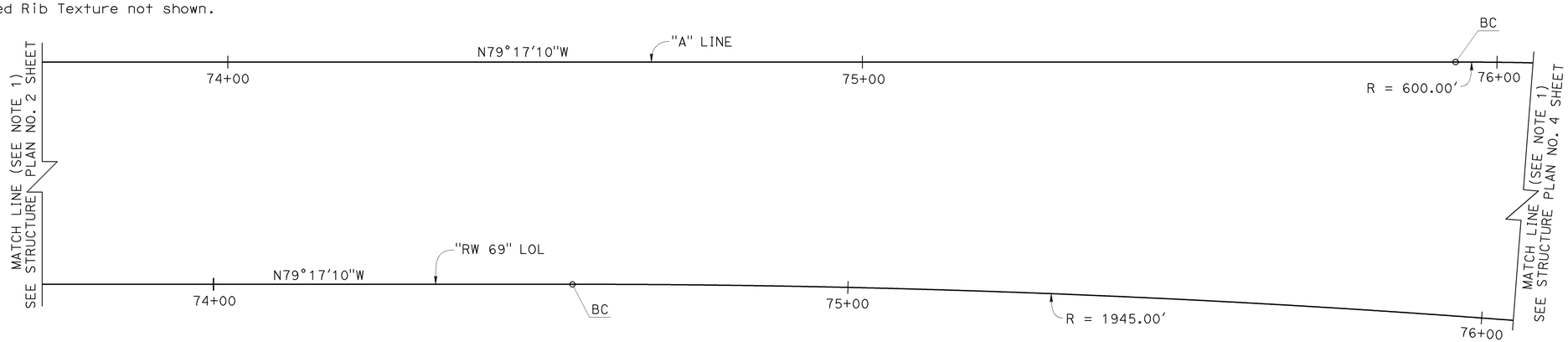

NOTE:
THE CONTRACTOR MUST VERIFY ALL CONTROLLING FIELD DIMENSIONS BEFORE ORDERING OR FABRICATING ANY MATERIAL.

PLAN

1" = 10'-0"

	BY	CHECKED
DESIGN	Paul Yang	Jose Higareda
DETAILS	Herman Mauroschadt	Jose Higareda
QUANTITIES	Paul Yang	Fred Feng

STATE OF CALIFORNIA
DEPARTMENT OF TRANSPORTATION

DIVISION OF ENGINEERING SERVICES
STRUCTURE DESIGN
DESIGN BRANCH 15

BRIDGE NO. 55E0170
POST MILE 16.6

RETAINING WALL NO. 69
STRUCTURE PLAN NO. 3

STRUCTURES DESIGN DETAIL SHEET (ENGLISH) (REV. 09-01-10)

ORIGINAL SCALE IN INCHES FOR REDUCED PLANS 0 1 2 3

UNIT: 3604
PROJECT NUMBER & PHASE: 1212000017
CONTRACT NO.: 12-0M340

DISREGARD PRINTS BEARING EARLIER REVISION DATES

REVISION DATES 12-2-14 3-16-15 3-30-15 4-24-15

SHEET 6 OF 15

FILE => 55e0170-c-sp03.dgn

USERNAME => s132486 DATE PLOTTED => 29-MAY-2015 TIME PLOTTED => 13:33

DIST	COUNTY	ROUTE	POST MILES TOTAL PROJECT	SHEET No.	TOTAL SHEETS
12	Ora	73,133	16.6,4.2	99	107

REGISTERED CIVIL ENGINEER 5-20-15 DATE

06-01-15
PLANS APPROVAL DATE

REGISTERED PROFESSIONAL ENGINEER Hung Po Yang No. C66376 Exp. 06-30-16 CIVIL STATE OF CALIFORNIA

The State of California or its officers or agents shall not be responsible for the accuracy or completeness of scanned copies of this plan sheet.

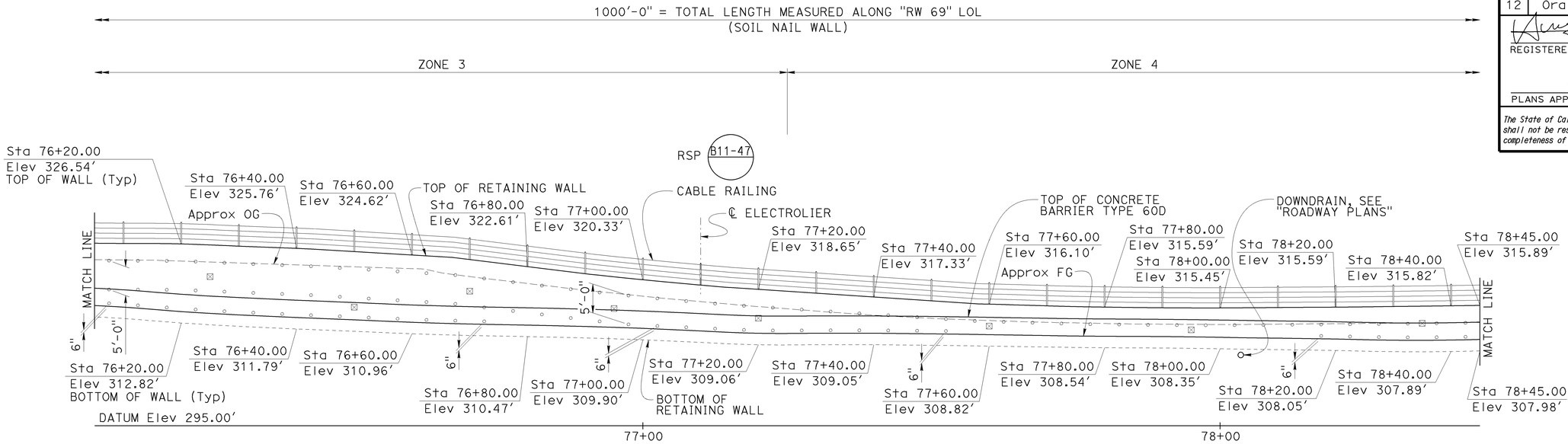

DEVELOPED MIRRORED ELEVATION

1" = 10'-0"

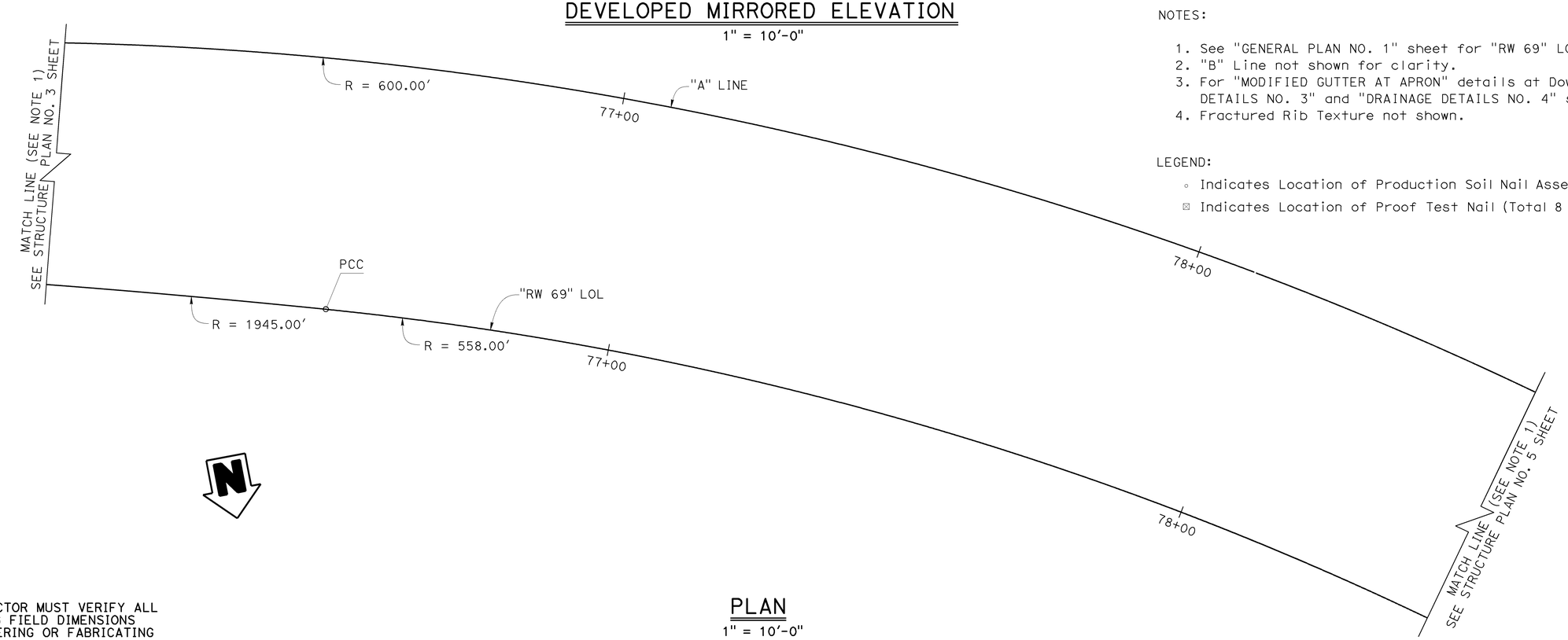

PLAN

1" = 10'-0"

NOTES:

1. See "GENERAL PLAN NO. 1" sheet for "RW 69" LOL Alignment information.
2. "B" Line not shown for clarity.
3. For "MODIFIED GUTTER AT APRON" details at Downdrain locations see "DRAINAGE DETAILS NO. 3" and "DRAINAGE DETAILS NO. 4" sheets.
4. Fractured Rib Texture not shown.

LEGEND:

- ◦ Indicates Location of Production Soil Nail Assembly (Total 98 this sheet)
- ⊠ Indicates Location of Proof Test Nail (Total 8 this sheet)

NOTE:
THE CONTRACTOR MUST VERIFY ALL CONTROLLING FIELD DIMENSIONS BEFORE ORDERING OR FABRICATING ANY MATERIAL.

	BY	CHECKED
DESIGN	Paul Yang	Jose Higareda
DETAILS	Herman Mauroschadt	Jose Higareda
QUANTITIES	Paul Yang	Fred Feng

STATE OF CALIFORNIA
DEPARTMENT OF TRANSPORTATION

DIVISION OF ENGINEERING SERVICES
STRUCTURE DESIGN
DESIGN BRANCH 15

BRIDGE NO. 55E0170
POST MILE 16.6

RETAINING WALL NO. 69
STRUCTURE PLAN NO. 4

STRUCTURES DESIGN DETAIL SHEET (ENGLISH) (REV. 09-01-10)

ORIGINAL SCALE IN INCHES FOR REDUCED PLANS 0 1 2 3

UNIT: 3604
PROJECT NUMBER & PHASE: 1212000017
CONTRACT NO.: 12-0M340

DISREGARD PRINTS BEARING EARLIER REVISION DATES

REVISION DATES: 12-2-14 3-24-15 4-24-15 4-1-15

SHEET 7 OF 15

FILE => 55e0170-c-sp04.dgn

USERNAME => s132486 DATE PLOTTED => 29-MAY-2015 TIME PLOTTED => 13:52

DIST	COUNTY	ROUTE	POST MILES TOTAL PROJECT	SHEET No.	TOTAL SHEETS
12	Ora	73,133	16.6,4.2	100	107

REGISTERED CIVIL ENGINEER 5-20-15 DATE

06-01-15
PLANS APPROVAL DATE

REGISTERED PROFESSIONAL ENGINEER Hung Po Yang No. C66376 Exp. 06-30-16 CIVIL STATE OF CALIFORNIA

The State of California or its officers or agents shall not be responsible for the accuracy or completeness of scanned copies of this plan sheet.

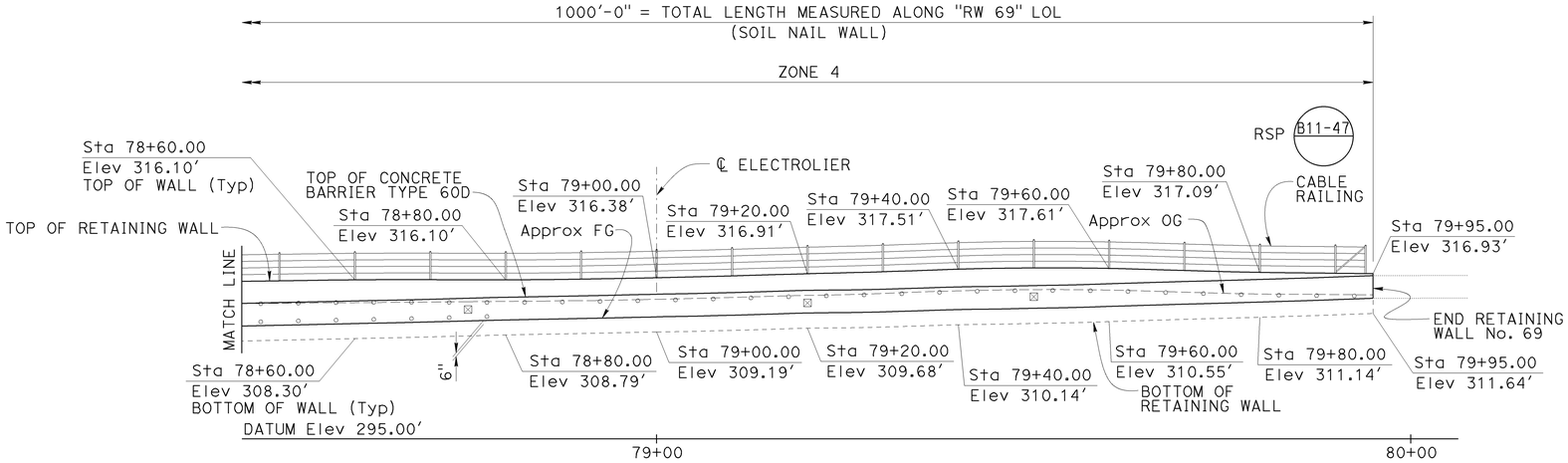

DEVELOPED MIRRORED ELEVATION

1" = 10'-0"

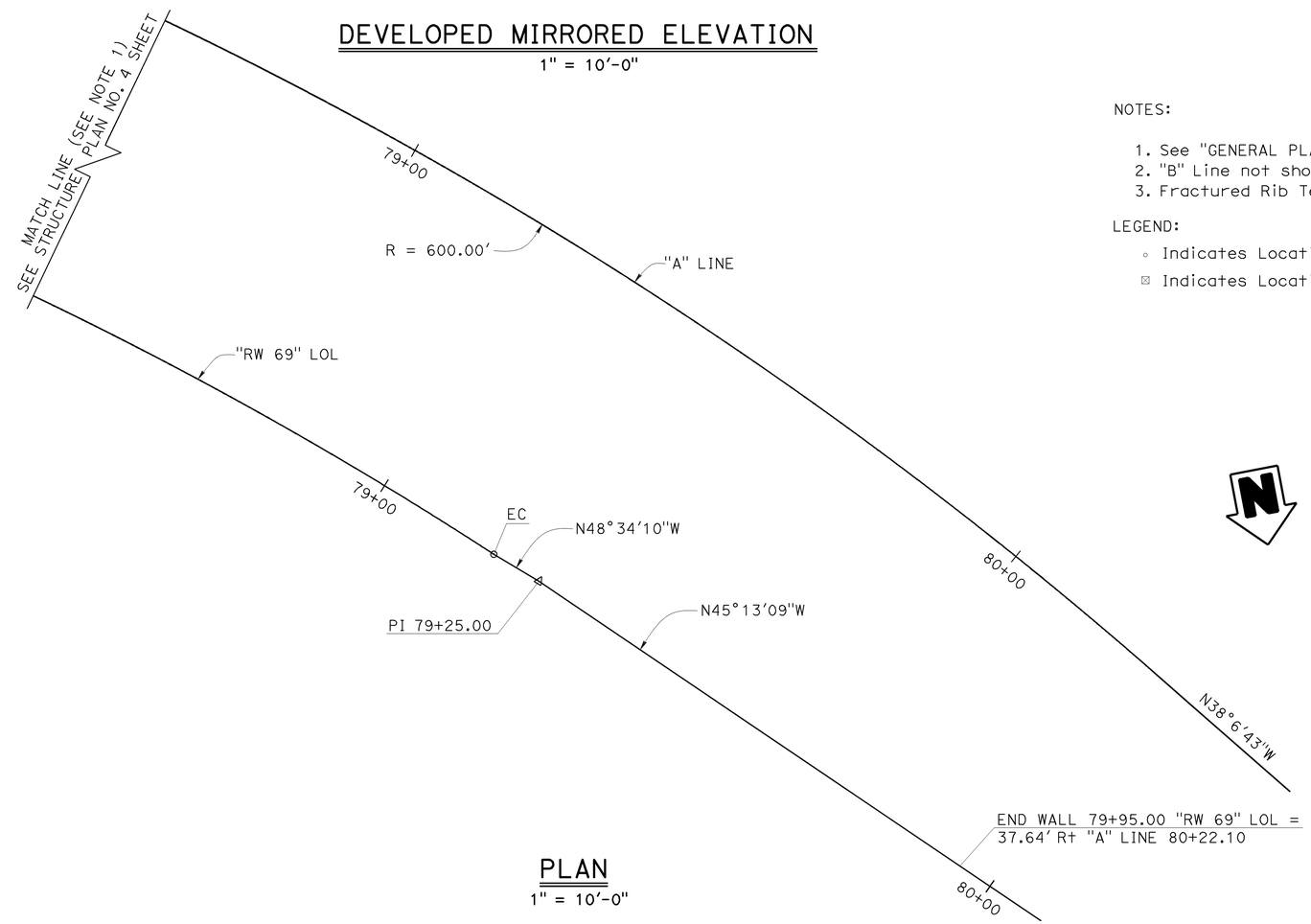

PLAN

1" = 10'-0"

NOTES:

1. See "GENERAL PLAN NO. 1" sheet for "RW 69" LOL Alignment information.
2. "B" Line not shown for clarity.
3. Fractured Rib Texture not shown.

LEGEND:

- ◦ Indicates Location of Production Soil Nail Assembly (Total 37 this sheet)
- ⊠ Indicates Location of Proof Test Nail (Total 3 this sheet)

NOTE:
THE CONTRACTOR MUST VERIFY ALL CONTROLLING FIELD DIMENSIONS BEFORE ORDERING OR FABRICATING ANY MATERIAL.

	BY	CHECKED
DESIGN	Paul Yang	Jose Higareda
DETAILS	Herman Mauroschadt	Jose Higareda
QUANTITIES	Paul Yang	Fred Feng

STATE OF CALIFORNIA
DEPARTMENT OF TRANSPORTATION

DIVISION OF ENGINEERING SERVICES
STRUCTURE DESIGN
DESIGN BRANCH 15

BRIDGE NO. 55E0170
POST MILE 16.6

RETAINING WALL NO. 69
STRUCTURE PLAN NO. 5

STRUCTURES DESIGN DETAIL SHEET (ENGLISH) (REV. 09-01-10)

ORIGINAL SCALE IN INCHES FOR REDUCED PLANS 0 1 2 3

UNIT: 3604
PROJECT NUMBER & PHASE: 1212000017
CONTRACT NO.: 12-0M340

DISREGARD PRINTS BEARING EARLIER REVISION DATES

REVISION DATES: 12-2-14 1-24-15 4-1-15 1-13-15

SHEET 8 OF 15

FILE => 55e0170-c-sp05.dgn

USERNAME => s132486 DATE PLOTTED => 29-MAY-2015 TIME PLOTTED => 13:32