Dist	COUNTY	ROUTE	POST MILES TOTAL PROJECT	SHEET No.	TOTAL SHEETS
12	Ora	405	5.0/5.6	1	92

INDEX OF PLANS

SHEET No.	DESCRIPTION
1	TITLE AND LOCATION MAP
2-3	TYPICAL CROSS SECTIONS
4-6	LAYOUTS
7-10	CONSTRUCTION DETAILS
11-13	TEMPORARY WATER POLLUTION CONTROL PLAN, DETAILS AND QUANTITIES
14-22	DRAINAGE PLANS, PROFILES, DETAILS AND QUANTITIES
23	CONSTRUCTION AREA SIGNS
24-27	STAGE CONSTRUCTION PLANS
28	TRAFFIC HANDLING PLANS
29-32	PAVEMENT DELINEATION PLANS
33-42	SIGN PLANS
43-44	SUMMARY OF QUANTITIES
45-57	HIGHWAY PLANTING PLANS
58-62	ELECTRICAL PLANS
63-92	REVISED AND NEW STANDARD PLANS

THE STANDARD PLANS LIST APPLICABLE TO THIS CONTRACT IS INCLUDED IN THE NOTICE TO BIDDERS AND SPECIAL PROVISIONS BOOK.

STATE OF CALIFORNIA

DEPARTMENT OF TRANSPORTATION

PROJECT PLANS FOR CONSTRUCTION ON

STATE HIGHWAY

IN ORANGE COUNTY

IN IRVINE

FROM 1.0 MILE NORTH OF JEFFREY ROAD OVERCROSSING TO CULVER DRIVE OVERCROSSING

TO BE SUPPLEMENTED BY STANDARD PLANS DATED MAY 2006

LOCATION MAP

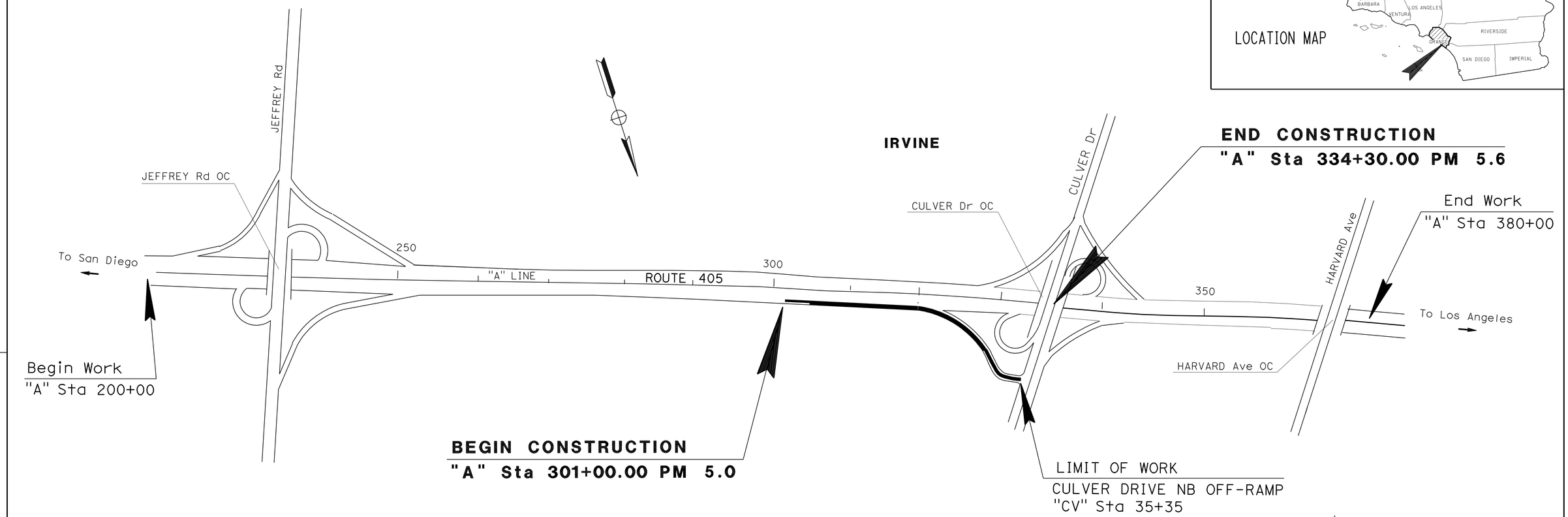

NO SCALE

THE CONTRACTOR SHALL POSSESS THE CLASS (OR CLASSES) OF LICENSE AS SPECIFIED IN THE "NOTICE TO BIDDERS."

PROJECT MANAGER: BOB BAZARGAN

DESIGN ENGINEER: BEN IONESCU

05-10-12
PROJECT ENGINEER REGISTERED CIVIL ENGINEER — DATE

REGISTERED PROFESSIONAL ENGINEER — BEN IONESCU — No. C65482 — Exp. 09-30-13 — CIVIL — STATE OF CALIFORNIA

May 29, 2012
PLANS APPROVAL DATE

THE STATE OF CALIFORNIA OR ITS OFFICERS OR AGENTS SHALL NOT BE RESPONSIBLE FOR THE ACCURACY OR COMPLETENESS OF SCANNED COPIES OF THIS PLAN SHEET.

CONTRACT No.	12-0M1304
PROJECT ID	1200020298

LAST REVISION 00-00-00 — DATE PLOTTED => 30-MAY-2012 — TIME PLOTTED => 14:11

Dist	COUNTY	ROUTE	POST MILES TOTAL PROJECT	SHEET No.	TOTAL SHEETS
12	Ora	405	5.0/5.6	2	92

REGISTERED CIVIL ENGINEER 05-10-12 DATE

5-29-12
PLANS APPROVAL DATE

REGISTERED PROFESSIONAL ENGINEER
BEN IONESCU
No. C65482
Exp. 09-30-13
CIVIL
STATE OF CALIFORNIA

THE STATE OF CALIFORNIA OR ITS OFFICERS OR AGENTS SHALL NOT BE RESPONSIBLE FOR THE ACCURACY OR COMPLETENESS OF SCANNED COPIES OF THIS PLAN SHEET.

NOTES:

1. DIMENSIONS OF THE STRUCTURAL SECTIONS ARE SUBJECT TO TOLERANCES SPECIFIED IN THE STANDARD SPECIFICATIONS.
2. SUPERELEVATION AS SHOWN OR AS DIRECTED BY THE ENGINEER.
3. EXACT LOCATIONS AND TYPES OF DIKE, CURB AND MBGR ARE SHOWN ON THE LAYOUTS, AND IN THE SUMMARY OF QUANTITIES SHEETS.
4. FOR LOCATION AND PLACEMENT OF MATERIAL WITH AERIALLY DEPOSITED LEAD, SEE CONSTRUCTION DETAIL SHEETS.

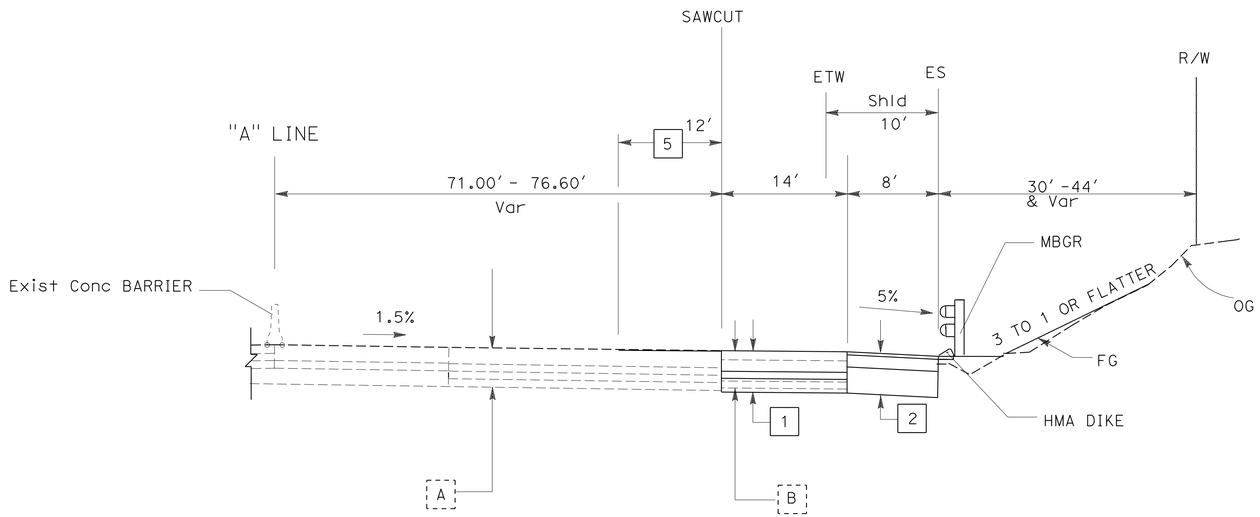

ROUTE 405

"A" 308+69.79 TO "A" 320+78.12

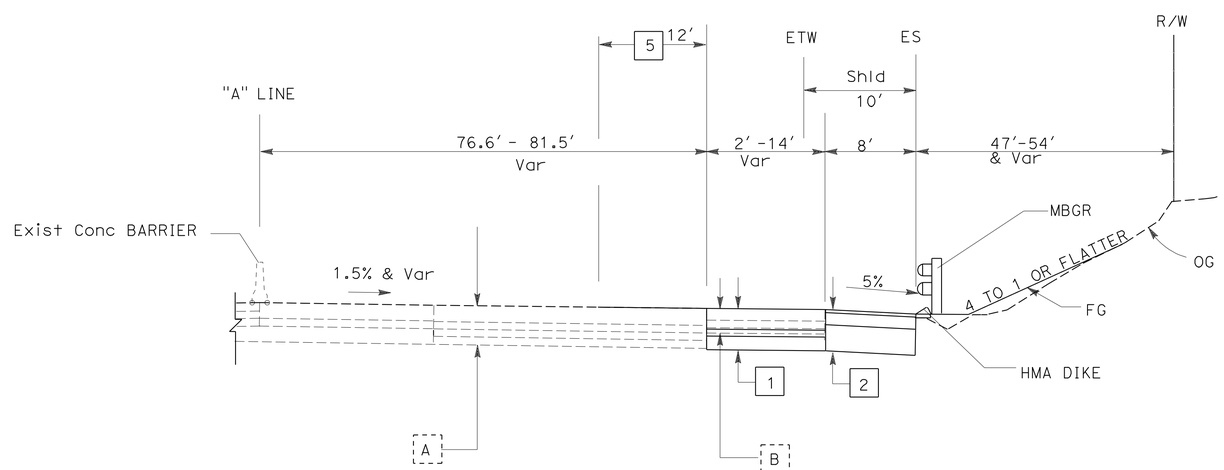

ROUTE 405

"A" 305+78.12 TO "A" 308+69.79

Exist STRUCTURE SECTION :

A
- 0.75' PCC
- 0.40' LCB
- 0.35' CL3 AB
- 0.50' CL4 AS

B
- 0.40' AC
- 0.71' CL2 AB
- Var CL4 AS

C
- 0.55' AC (TYPE A)
- 0.45' PCC
- 0.40' CTB
- 0.50' AB

D
- 0.35' AC
- 0.85' AS CL4
- 1.05' AB CL2

STRUCTURE SECTION TYPES:

1
- 1.05' JOINTED PLAIN CONCRETE PAVEMENT
- 0.35' LCB
- 2.60' CLASS 3 AS

2
- 0.20' RUBBERIZED HMA (GAP GRADED)
- 0.70' HMA (TYPE A)
- 3.10' CLASS 3 AS

3
- 0.20' RUBBERIZED HMA (GAP GRADED)
- 1.20' HMA (TYPE A)
- 0.35' CLASS 3 AS

4
- 0.20' RUBBERIZED HMA (GAP GRADED)
- 0.20' COLD PLANE AC PAVEMENT

5
- GRIND Exist Conc Pvmt

TYPICAL CROSS SECTIONS

NO SCALE

X-1

STATE OF CALIFORNIA - DEPARTMENT OF TRANSPORTATION
Caltrans
DESIGN DIVISION

FUNCTIONAL SUPERVISOR: KAMRAN MAZHAR
CALCULATED-DESIGNED BY: DUNG PHAN
CHECKED BY: BEN IONESCU
REVISED BY
DATE REVISED

LAST REVISION 11-19-10 | DATE PLOTTED => 30-MAY-2012 | TIME PLOTTED => 11:49

Dist	COUNTY	ROUTE	POST MILES TOTAL PROJECT	SHEET No.	TOTAL SHEETS
12	Ora	405	5.0/5.6	3	92

REGISTERED CIVIL ENGINEER 05-10-12 DATE

5-29-12
PLANS APPROVAL DATE

REGISTERED PROFESSIONAL ENGINEER
BEN IONESCU
No. C65482
Exp. 09-30-13
CIVIL
STATE OF CALIFORNIA

THE STATE OF CALIFORNIA OR ITS OFFICERS OR AGENTS SHALL NOT BE RESPONSIBLE FOR THE ACCURACY OR COMPLETENESS OF SCANNED COPIES OF THIS PLAN SHEET.

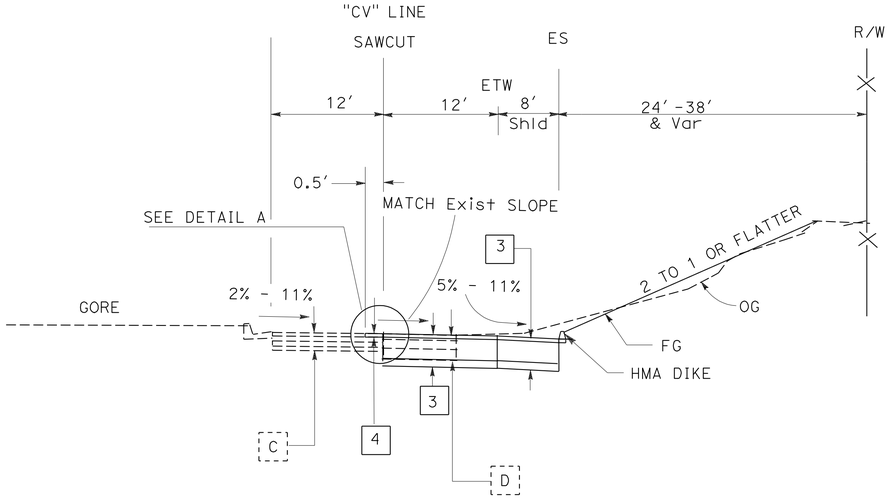

CULVER DRIVE NB OFF-RAMP

"CV" 25+24.75 TO "CV" 28+15.00

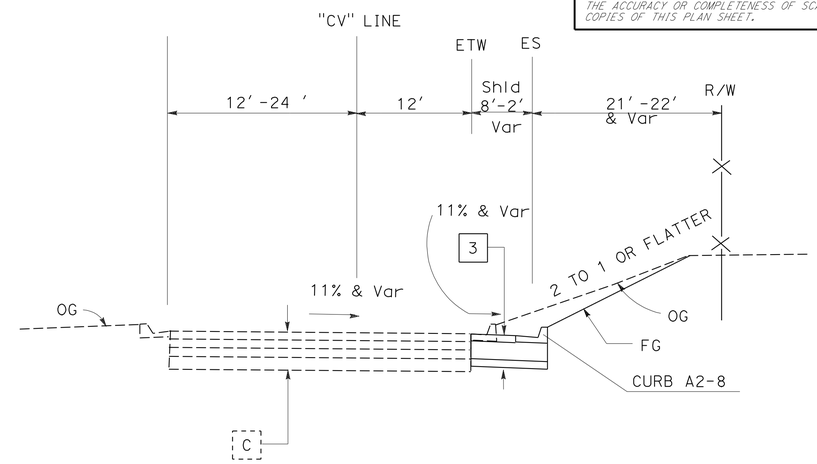

CULVER DRIVE NB OFF-RAMP

"CV" 30+47.26 TO "CV" 31+35.00

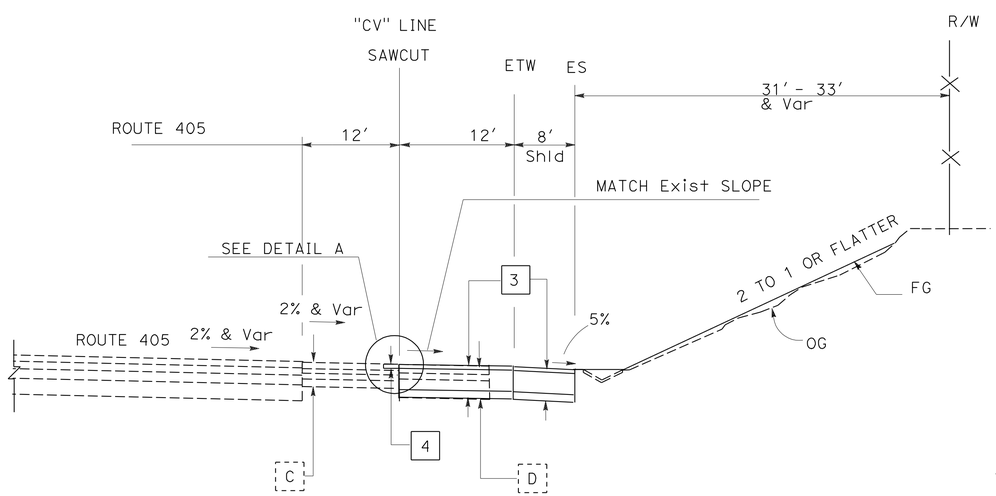

CULVER DRIVE NB OFF-RAMP

"CV" 20+78.12 TO "CV" 25+24.75

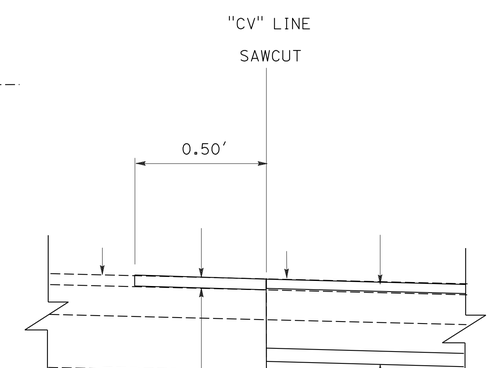

DETAIL A

"CV" 20+78.12 TO "CV" 28+15.00

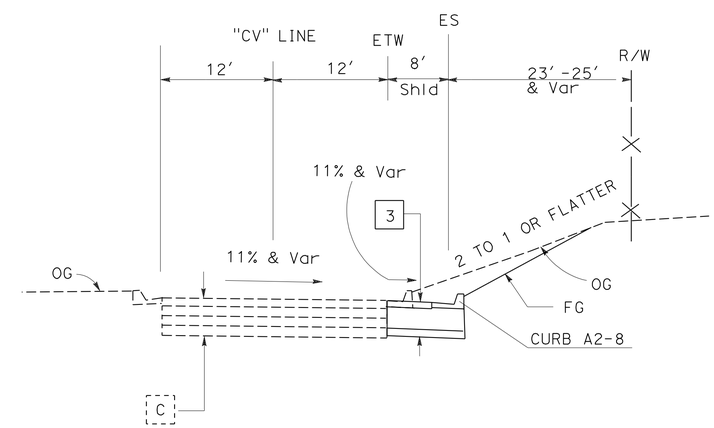

CULVER DRIVE NB OFF-RAMP

"CV" 28+15.00 TO "CV" 30+47.26

TYPICAL CROSS SECTIONS

NO SCALE

X-2

STATE OF CALIFORNIA - DEPARTMENT OF TRANSPORTATION
Caltrans® DESIGN DIVISION

FUNCTIONAL SUPERVISOR: KAMRAN MAZHAR
CALCULATED-DESIGNED BY: DUNG PHAN
CHECKED BY: BEN IONESCU
REVISED BY
DATE REVISED

LAST REVISION 11-19-10
DATE PLOTTED => 30-MAY-2012
TIME PLOTTED => 11:49

Dist	COUNTY	ROUTE	POST MILES TOTAL PROJECT	SHEET No.	TOTAL SHEETS
12	Ora	405	5.0/5.6	4	92

REGISTERED CIVIL ENGINEER 05-10-12 DATE

5-29-12
PLANS APPROVAL DATE

REGISTERED PROFESSIONAL ENGINEER BEN IONESCU No. C65482 Exp. 09-30-13 CIVIL STATE OF CALIFORNIA

THE STATE OF CALIFORNIA OR ITS OFFICERS OR AGENTS SHALL NOT BE RESPONSIBLE FOR THE ACCURACY OR COMPLETENESS OF SCANNED COPIES OF THIS PLAN SHEET.

NOTES:

1. FOR ACCURATE RIGHT OF WAY DATA, CONTACT RIGHT OF WAY ENGINEERING AT THE DISTRICT OFFICE.
2. FOR DETAILS AND LIMITS OF STRUCTURAL SECTION TYPE [4], SEE DETAIL A ON SHEET X-2.
3. FOR CONCRETE PAVEMENT TRANSITION PANEL, SEE STANDARD PLANS P30.

ABBREVIATIONS:

SCG - SOUTHERN CALIFORNIA GAS COMPANY
AT&T - AMERICAN TELEGRAPH AND TELEPHONE COMPANY

LEGEND:

[X] STRUCTURAL SECTION TYPE SEE SHEET X-1

(X) CURVE No.

CURVE DATA

No.	R	Δ	T	L
1	8000.00′	12°20′53″	865.40′	1724.09′

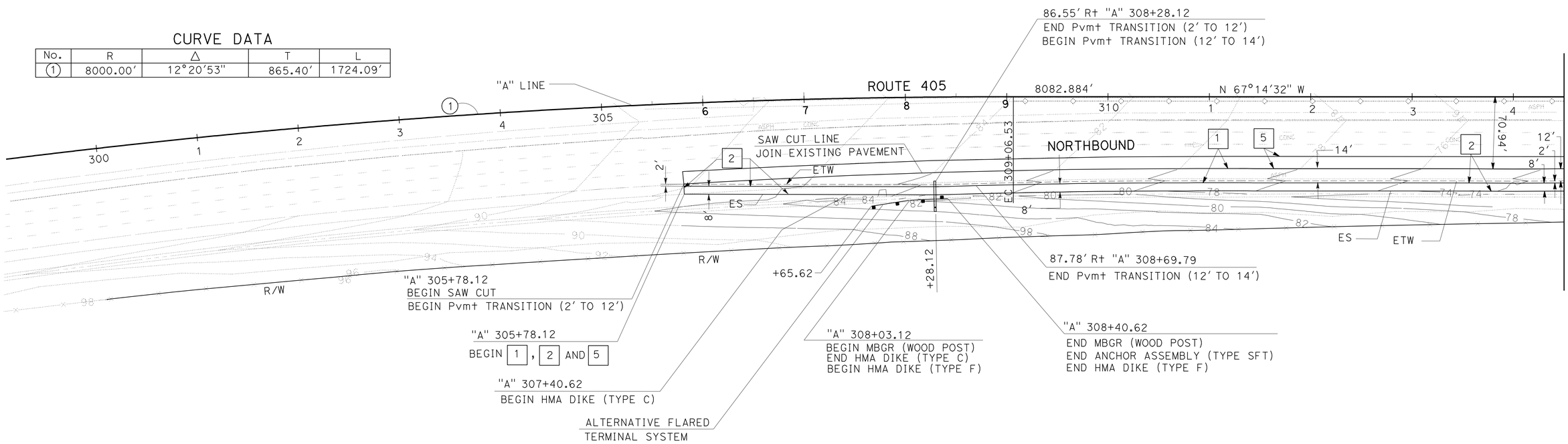

LAYOUT

SCALE: 1" = 50′

L-1

REVISED BY	DATE REVISED

CALCULATED-DESIGNED BY	CHECKED BY
DUNG PHAN	BEN IONESCU

FUNCTIONAL SUPERVISOR: KAMRAN MAZHAR

STATE OF CALIFORNIA - DEPARTMENT OF TRANSPORTATION
Caltrans
DESIGN DIVISION

LAST REVISION 00-00-00 | DATE PLOTTED => 30-MAY-2012 | TIME PLOTTED => 11:49

Dist	COUNTY	ROUTE	POST MILES TOTAL PROJECT	SHEET No.	TOTAL SHEETS
12	Ora	405	5.0/5.6	5	92

REGISTERED CIVIL ENGINEER 05-10-12 DATE

5-29-12
PLANS APPROVAL DATE

REGISTERED PROFESSIONAL ENGINEER
BEN IONESCU
No. C65482
Exp. 09-30-13
CIVIL
STATE OF CALIFORNIA

THE STATE OF CALIFORNIA OR ITS OFFICERS OR AGENTS SHALL NOT BE RESPONSIBLE FOR THE ACCURACY OR COMPLETENESS OF SCANNED COPIES OF THIS PLAN SHEET.

NOTE:

FOR ACCURATE RIGHT OF WAY DATA, CONTACT RIGHT OF WAY ENGINEERING AT THE DISTRICT OFFICE.

CURVE DATA

No.	R	Δ	T	L
2	700.00′	32°03′15″	201.08′	391.62′

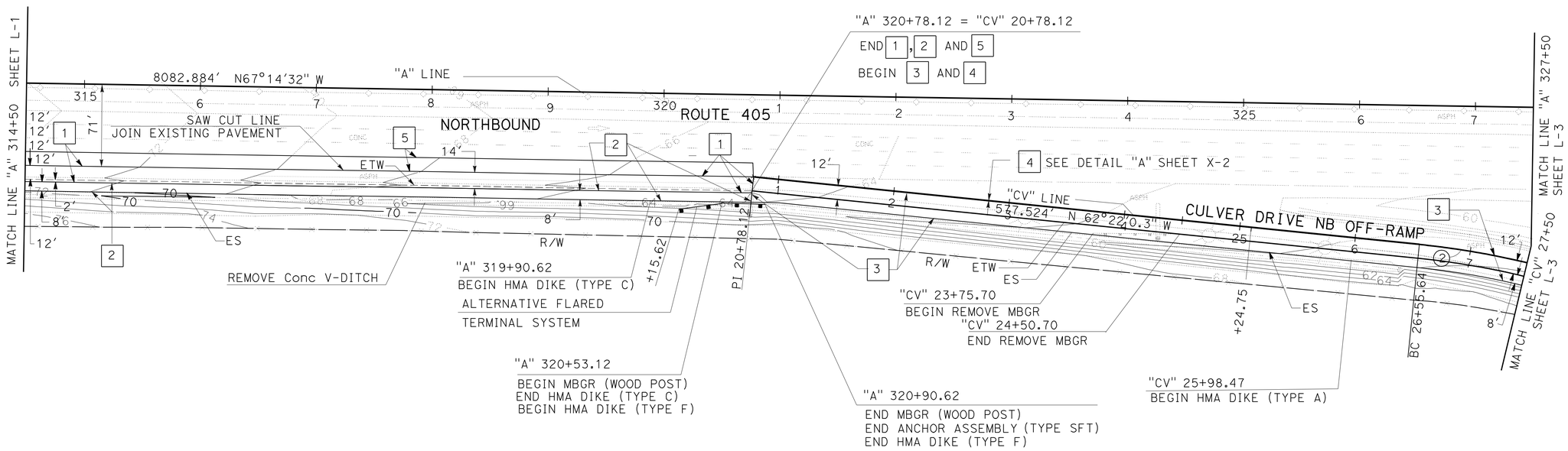

LAYOUT

SCALE: 1" = 50′

L-2

STATE OF CALIFORNIA - DEPARTMENT OF TRANSPORTATION
Caltrans
DESIGN DIVISION

FUNCTIONAL SUPERVISOR: KAMRAN MAZHAR
CALCULATED-DESIGNED BY: DUNG PHAN
CHECKED BY: BEN IONESCU
REVISED BY
DATE REVISED

LAST REVISION 00-00-00
DATE PLOTTED => 30-MAY-2012
TIME PLOTTED => 11:49

Dist	COUNTY	ROUTE	POST MILES TOTAL PROJECT	SHEET No.	TOTAL SHEETS
12	Ora	405	5.0/5.6	6	92

REGISTERED CIVIL ENGINEER 05-10-12 DATE

5-29-12
PLANS APPROVAL DATE

REGISTERED PROFESSIONAL ENGINEER
BEN IONESCU
No. C65482
Exp. 09-30-13
CIVIL
STATE OF CALIFORNIA

THE STATE OF CALIFORNIA OR ITS OFFICERS OR AGENTS SHALL NOT BE RESPONSIBLE FOR THE ACCURACY OR COMPLETENESS OF SCANNED COPIES OF THIS PLAN SHEET.

NOTE:

FOR ACCURATE RIGHT OF WAY DATA, CONTACT RIGHT OF WAY ENGINEERING AT THE DISTRICT OFFICE.

CURVE DATA

No.	R	Δ	T	L
3	800.00′	18°59′52″	133.86′	265.26′

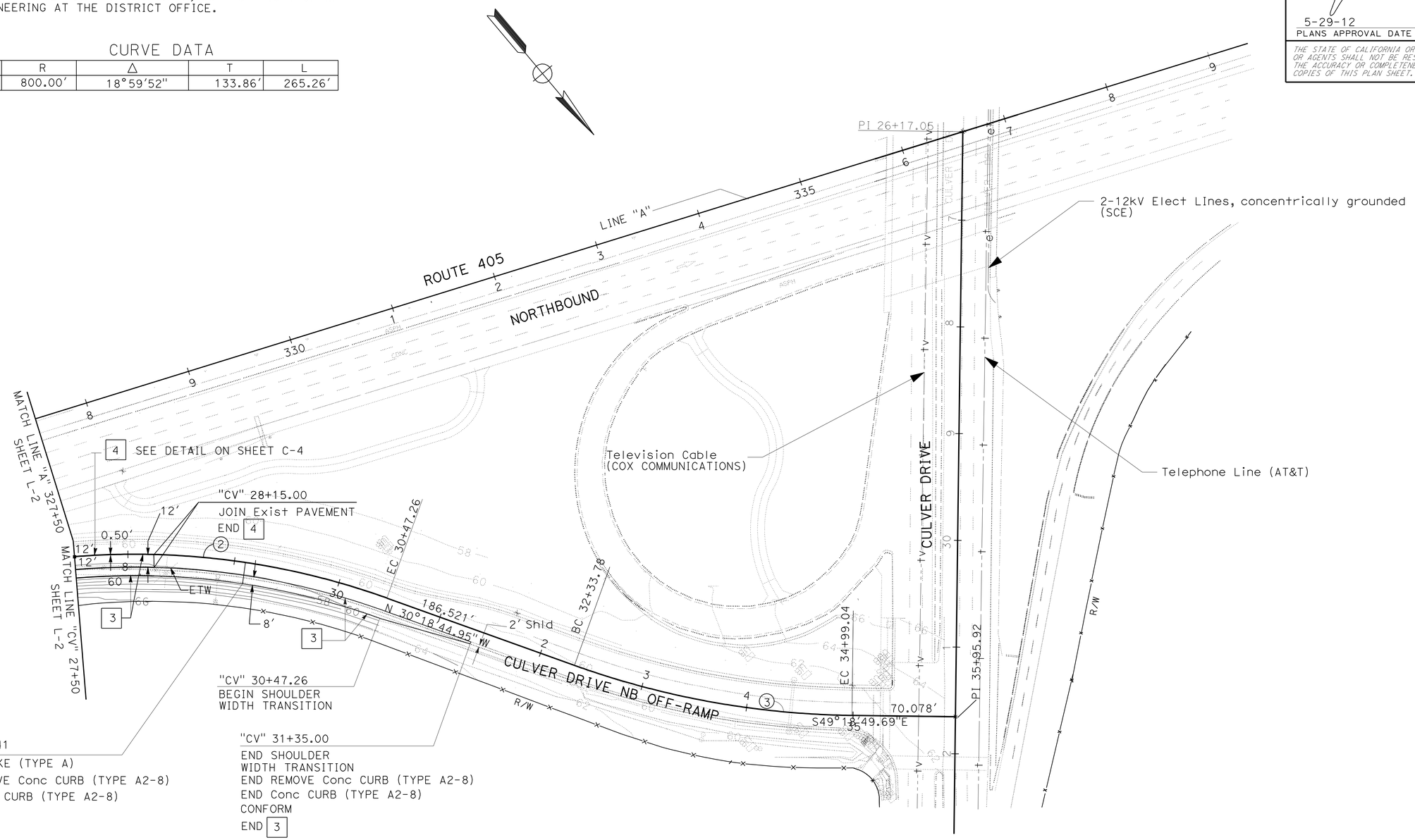

LAYOUT

SCALE: 1" = 50′

L-3

STATE OF CALIFORNIA - DEPARTMENT OF TRANSPORTATION
Caltrans® DESIGN DIVISION

FUNCTIONAL SUPERVISOR: KAMRAN MAZHAR

DUNG PHAN | BEN IONESCU

CALCULATED-DESIGNED BY | CHECKED BY

REVISED BY | DATE REVISED

LAST REVISION 00-00-00 | DATE PLOTTED => 30-MAY-2012 | TIME PLOTTED => 11:49

Dist	COUNTY	ROUTE	POST MILES TOTAL PROJECT	SHEET No.	TOTAL SHEETS
12	Ora	405	5.0/5.6	7	92

REGISTERED CIVIL ENGINEER 05-10-12 DATE

5-29-12
PLANS APPROVAL DATE

REGISTERED PROFESSIONAL ENGINEER
BEN IONESCU
No. C65482
Exp. 09-30-13
CIVIL
STATE OF CALIFORNIA

THE STATE OF CALIFORNIA OR ITS OFFICERS OR AGENTS SHALL NOT BE RESPONSIBLE FOR THE ACCURACY OR COMPLETENESS OF SCANNED COPIES OF THIS PLAN SHEET.

NOTE:

FOR ACCURATE RIGHT OF WAY DATA, CONTACT RIGHT OF WAY ENGINEERING AT THE DISTRICT OFFICE.

LEGEND:

XX.XX FINISHED GRADE ELEVATIONS

Exist MATERIAL WITH AERIALLY DEPOSITED LEAD (TYPE Y-1) WITHIN UNPAVED AREA (TOP 0.5')

LIMIT OF OVER EXCAVATION FOR PLACING MATERIAL WITH AERIALLY DEPOSITED LEAD (TYPE Y-1)

X STRUCTURAL SECTION TYPE SEE SHEET X-1

X EXISTING STRUCTURAL SECTION TYPE SEE SHEET X-1

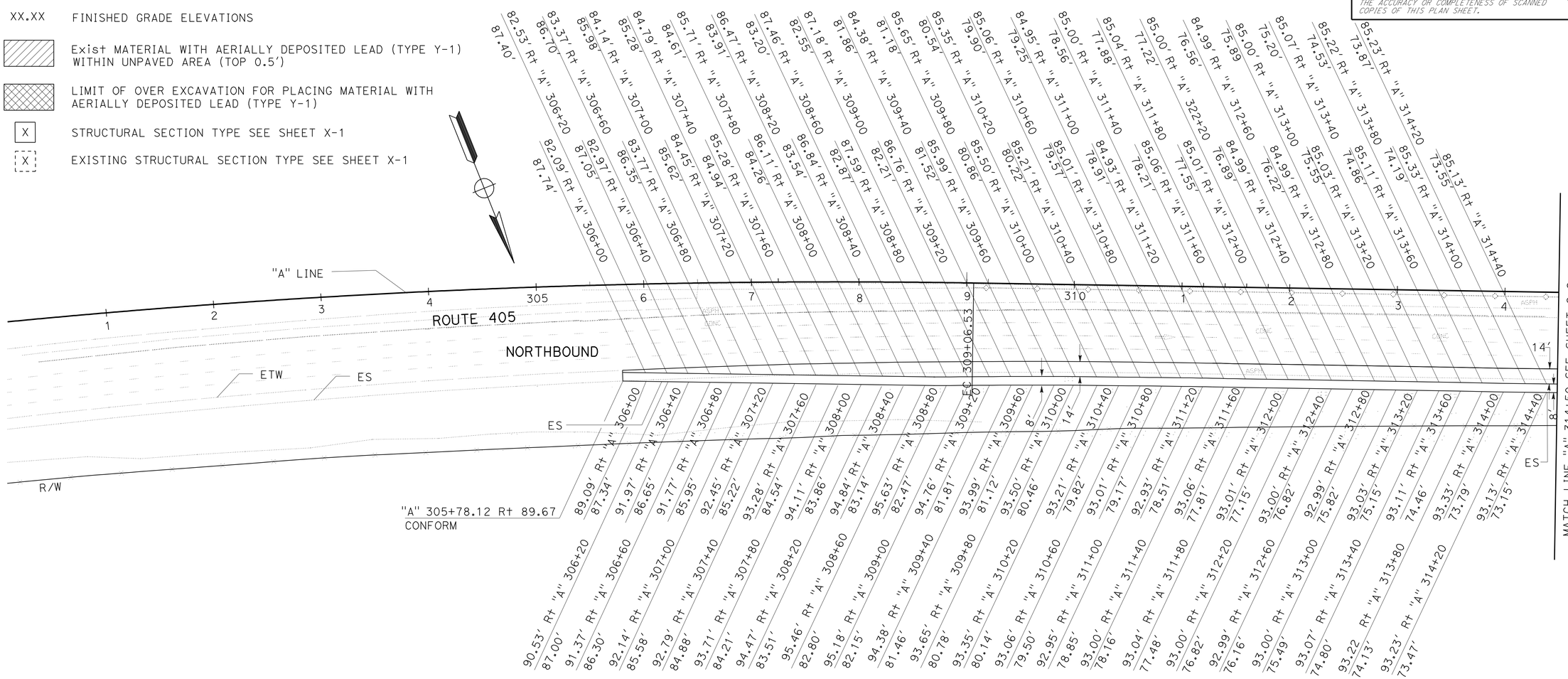

CONSTRUCTION DETAIL

SCALE: 1" = 50'

C-1

STATE OF CALIFORNIA - DEPARTMENT OF TRANSPORTATION
Caltrans DESIGN DIVISION

FUNCTIONAL SUPERVISOR: KAMRAN MAZHAR
CALCULATED-DESIGNED BY: DUNG PHAN
CHECKED BY: BEN IONESCU
REVISED BY
DATE REVISED

LAST REVISION 00-00-00
DATE PLOTTED => 30-MAY-2012
TIME PLOTTED => 13:45

Dist	COUNTY	ROUTE	POST MILES TOTAL PROJECT	SHEET No.	TOTAL SHEETS
12	Ora	405	5.0/5.6	8	92

REGISTERED CIVIL ENGINEER 05-10-12 DATE

5-29-12
PLANS APPROVAL DATE

REGISTERED PROFESSIONAL ENGINEER BEN IONESCU No. C65482 Exp. 09-30-13 CIVIL STATE OF CALIFORNIA

THE STATE OF CALIFORNIA OR ITS OFFICERS OR AGENTS SHALL NOT BE RESPONSIBLE FOR THE ACCURACY OR COMPLETENESS OF SCANNED COPIES OF THIS PLAN SHEET.

NOTE:

FOR ACCURATE RIGHT OF WAY DATA, CONTACT RIGHT OF WAY ENGINEERING AT THE DISTRICT OFFICE.

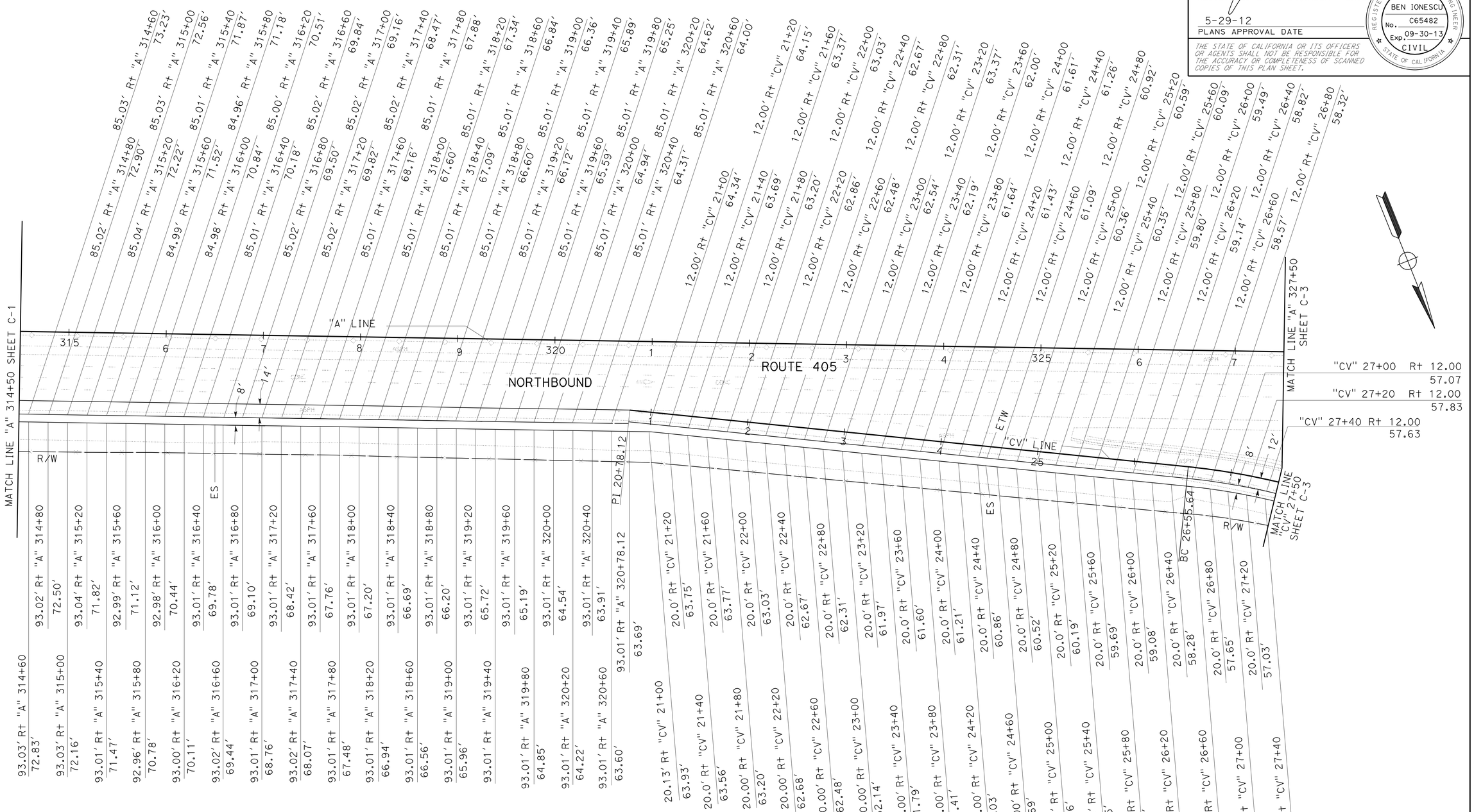

CONSTRUCTION DETAIL

SCALE: 1" = 50'

C-2

STATE OF CALIFORNIA - DEPARTMENT OF TRANSPORTATION

Caltrans® DESIGN DIVISION

FUNCTIONAL SUPERVISOR: KAMRAN MAZHAR

CALCULATED-DESIGNED BY: DUNG PHAN

CHECKED BY: BEN IONESCU

REVISED BY

DATE REVISED

LAST REVISION 00-00-00

DATE PLOTTED => 30-MAY-2012

TIME PLOTTED => 11:49

Dist	COUNTY	ROUTE	POST MILES TOTAL PROJECT	SHEET No.	TOTAL SHEETS
12	Ora	405	5.0/5.6	9	92

REGISTERED CIVIL ENGINEER 05-10-12 DATE

5-29-12
PLANS APPROVAL DATE

REGISTERED PROFESSIONAL ENGINEER
BEN IONESCU
No. C65482
Exp. 09-30-13
CIVIL
STATE OF CALIFORNIA

THE STATE OF CALIFORNIA OR ITS OFFICERS OR AGENTS SHALL NOT BE RESPONSIBLE FOR THE ACCURACY OR COMPLETENESS OF SCANNED COPIES OF THIS PLAN SHEET.

NOTE:

FOR ACCURATE RIGHT OF WAY DATA, CONTACT RIGHT OF WAY ENGINEERING AT THE DISTRICT OFFICE.

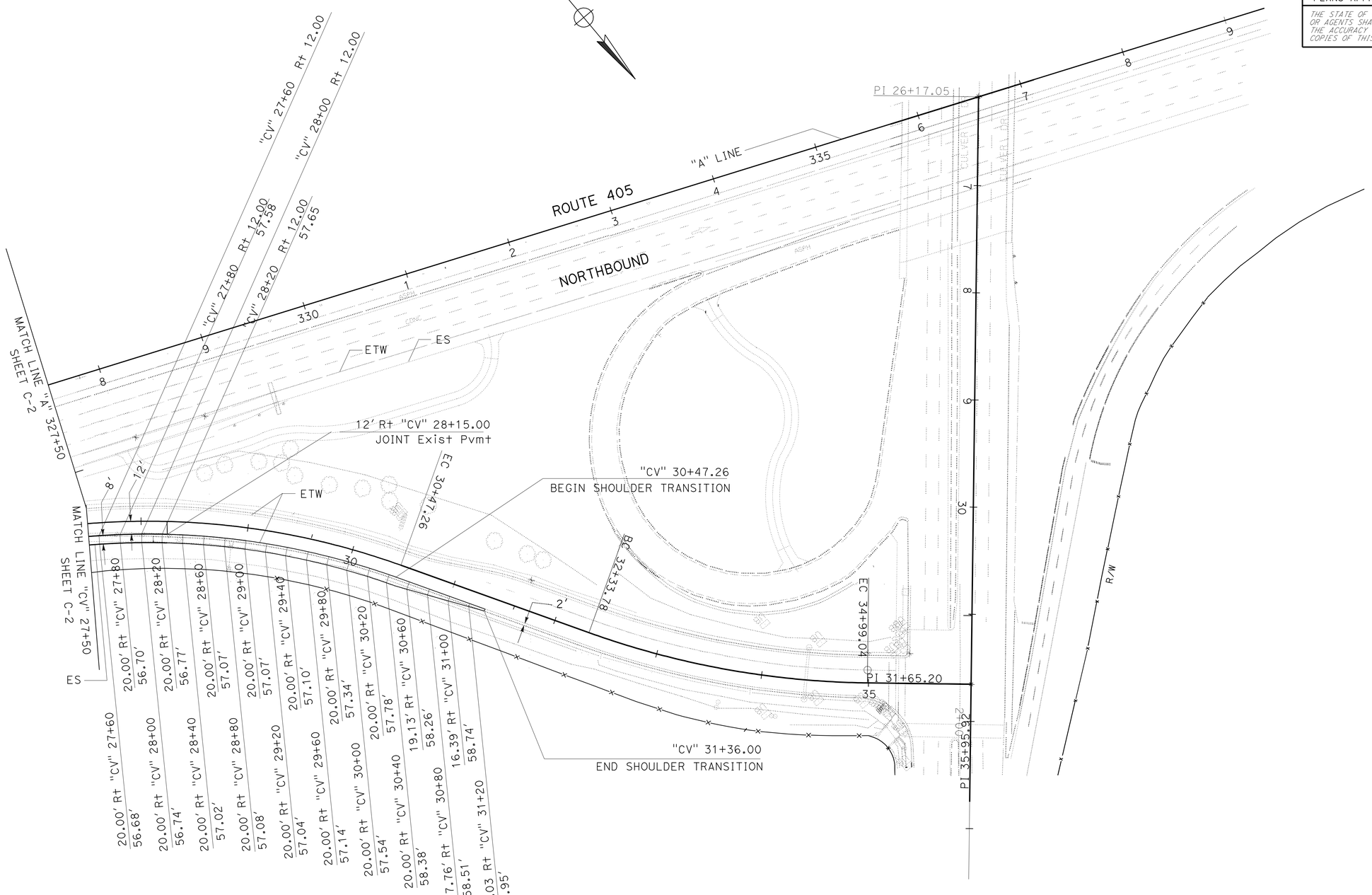

CONSTRUCTION DETAIL

SCALE: 1" = 50'

C-3

STATE OF CALIFORNIA - DEPARTMENT OF TRANSPORTATION
Caltrans® DESIGN DIVISION

FUNCTIONAL SUPERVISOR: KAMRAN MAZHAR
CALCULATED-DESIGNED BY: BEN IONESCU
CHECKED BY: DUNG PHAN
REVISED BY
DATE REVISED

LAST REVISION 00-00-00
DATE PLOTTED => 30-MAY-2012
TIME PLOTTED => 11:49

Dist	COUNTY	ROUTE	POST MILES TOTAL PROJECT	SHEET No.	TOTAL SHEETS
12	Ora	405	5.0/5.6	10	92

REGISTERED CIVIL ENGINEER 05-10-12 DATE

5-29-12
PLANS APPROVAL DATE

REGISTERED PROFESSIONAL ENGINEER
BEN IONESCU
No. C65482
Exp. 09-30-13
CIVIL
STATE OF CALIFORNIA

THE STATE OF CALIFORNIA OR ITS OFFICERS OR AGENTS SHALL NOT BE RESPONSIBLE FOR THE ACCURACY OR COMPLETENESS OF SCANNED COPIES OF THIS PLAN SHEET.

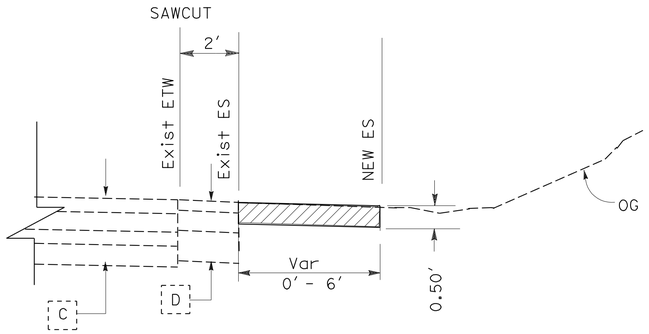

CULVER DRIVE NB OFF-RAMP

"CV" 28+15 TO "CV" 31+50

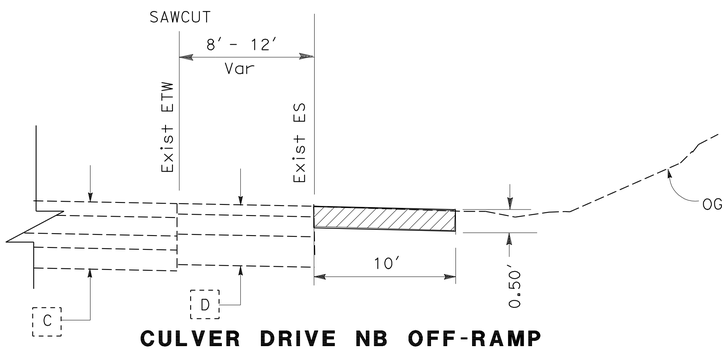

CULVER DRIVE NB OFF-RAMP

"CV" 24+55 TO "CV" 28+15

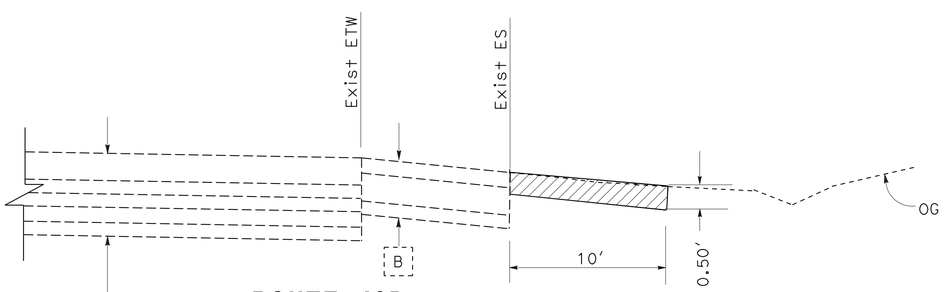

ROUTE 405

"A" 313+05 TO "A" 316+58

EXISTING LOCATION

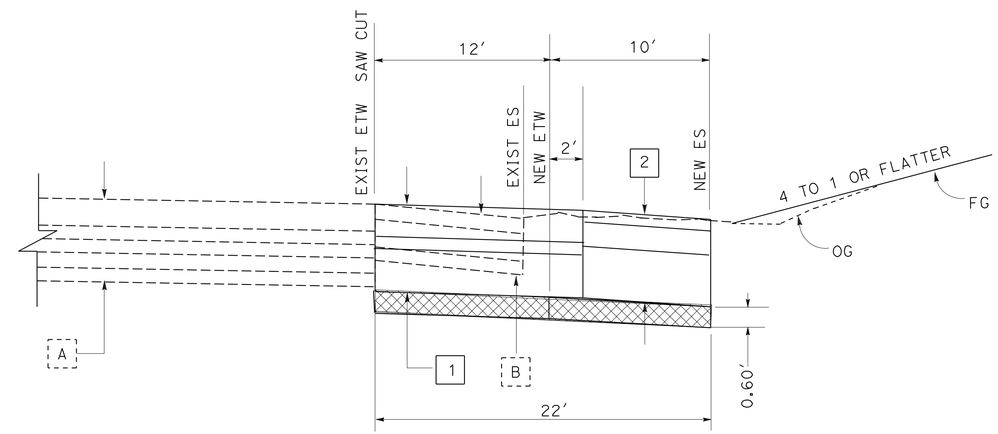

ROUTE 405

"A" 313+05 TO "A" 316+58

PLACEMENT

MATERIAL WITH AERIALLY DEPOSITED LEAD

CONSTRUCTION DETAIL

NO SCALE

C-4

STATE OF CALIFORNIA - DEPARTMENT OF TRANSPORTATION
Caltrans®
DESIGN DIVISION

FUNCTIONAL SUPERVISOR: KAMRAN MAZHAR
CALCULATED-DESIGNED BY: DUNG PHAN
CHECKED BY: BEN IONESCU
REVISED BY
DATE REVISED

LAST REVISION 11-19-10
DATE PLOTTED => 30-MAY-2012
TIME PLOTTED => 11:49

Dist	COUNTY	ROUTE	POST MILES TOTAL PROJECT	SHEET No.	TOTAL SHEETS
12	Ora	405	5.0/5.6	11	92

05-10-12
REGISTERED CIVIL ENGINEER DATE

5-29-12
PLANS APPROVAL DATE

REGISTERED PROFESSIONAL ENGINEER
BEN IONESCU
No. C65482
Exp. 09-30-13
CIVIL
STATE OF CALIFORNIA

THE STATE OF CALIFORNIA OR ITS OFFICERS OR AGENTS SHALL NOT BE RESPONSIBLE FOR THE ACCURACY OR COMPLETENESS OF SCANNED COPIES OF THIS PLAN SHEET.

NOTE:

FOR ACCURATE RIGHT OF WAY DATA, CONTACT RIGHT OF WAY ENGINEERING AT THE DISTRICT OFFICE.

LEGEND:

TEMPORARY HYDRAULIC MULCH

TFR TEMPORARY FIBER ROLLS

TEMPORARY CONSTRUCTION ENTRANCE

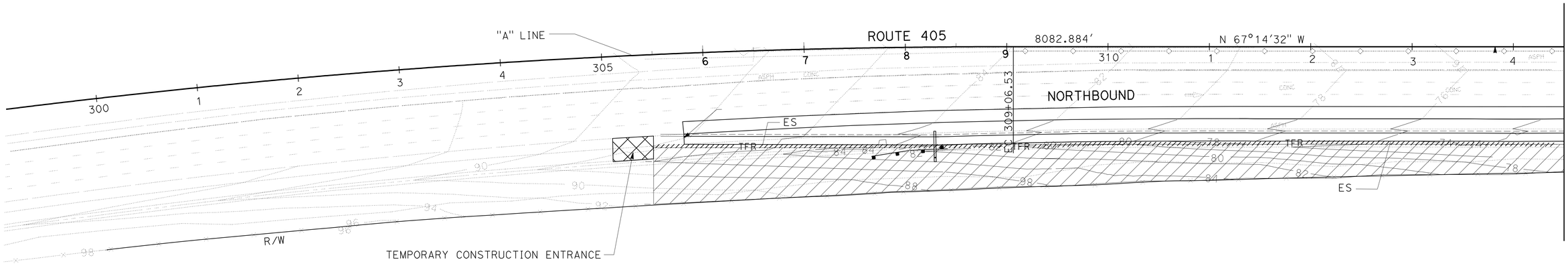

TEMPORARY WATER POLLUTION CONTROL PLAN

SCALE: 1" = 50'

WPC-1

APPROVED FOR WATER POLLUTION CONTROL WORK ONLY

REVISED BY | DATE REVISED

DUNG PHAN | BEN IONESCU

CALCULATED-DESIGNED BY | CHECKED BY

FUNCTIONAL SUPERVISOR: KAMRAN MAZHAR

STATE OF CALIFORNIA - DEPARTMENT OF TRANSPORTATION
Caltrans
DESIGN DIVISION

LAST REVISION 00-00-00 | DATE PLOTTED => 30-MAY-2012 | TIME PLOTTED => 13:31

Dist	COUNTY	ROUTE	POST MILES TOTAL PROJECT	SHEET No.	TOTAL SHEETS
12	Ora	405	5.0/5.6	12	92

REGISTERED CIVIL ENGINEER 05-10-12 DATE

5-29-12
PLANS APPROVAL DATE

REGISTERED PROFESSIONAL ENGINEER
BEN IONESCU
No. C65482
Exp. 09-30-13
CIVIL
STATE OF CALIFORNIA

THE STATE OF CALIFORNIA OR ITS OFFICERS OR AGENTS SHALL NOT BE RESPONSIBLE FOR THE ACCURACY OR COMPLETENESS OF SCANNED COPIES OF THIS PLAN SHEET.

NOTE:

FOR ACCURATE RIGHT OF WAY DATA, CONTACT RIGHT OF WAY ENGINEERING AT THE DISTRICT OFFICE.

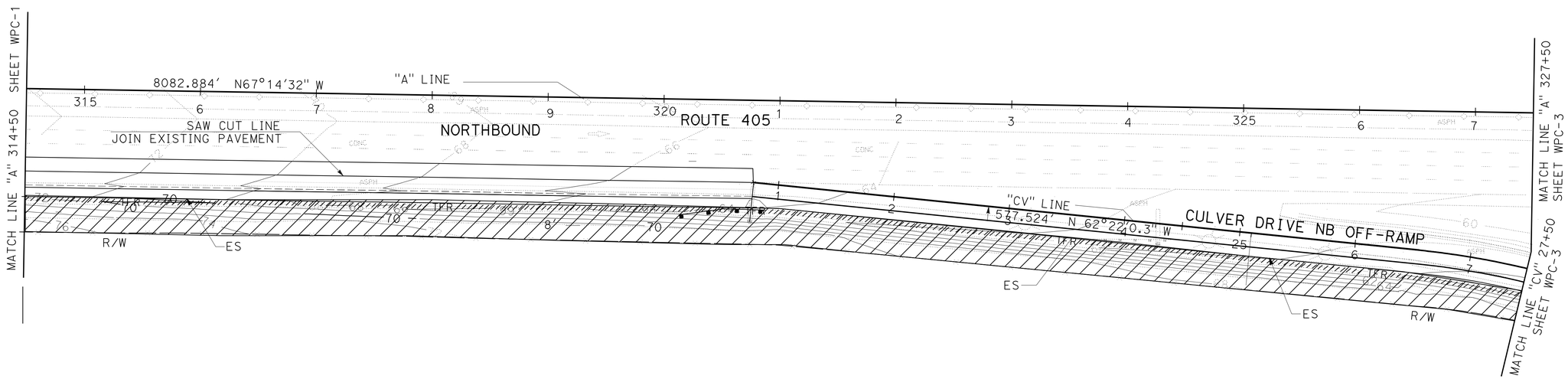

TEMPORARY WATER POLLUTION CONTROL PLAN

SCALE: 1" = 50'

WPC-2

APPROVED FOR TEMPORARY WATER POLLUTION CONTROL WORK ONLY

STATE OF CALIFORNIA - DEPARTMENT OF TRANSPORTATION
Caltrans
DESIGN DIVISION

FUNCTIONAL SUPERVISOR: KAMRAN MAZHAR
CALCULATED-DESIGNED BY: DUNG PHAN
CHECKED BY: BEN IONESCU
REVISED BY
DATE REVISED

LAST REVISION 00-00-00
DATE PLOTTED => 30-MAY-2012
TIME PLOTTED => 13:31

Dist	COUNTY	ROUTE	POST MILES TOTAL PROJECT	SHEET No.	TOTAL SHEETS
12	Ora	405	5.0/5.6	13	92

REGISTERED CIVIL ENGINEER 05-10-12 DATE

5-29-12
PLANS APPROVAL DATE

REGISTERED PROFESSIONAL ENGINEER
BEN IONESCU
No. C65482
Exp. 09-30-13
CIVIL
STATE OF CALIFORNIA

THE STATE OF CALIFORNIA OR ITS OFFICERS OR AGENTS SHALL NOT BE RESPONSIBLE FOR THE ACCURACY OR COMPLETENESS OF SCANNED COPIES OF THIS PLAN SHEET.

NOTE:

FOR ACCURATE RIGHT OF WAY DATA, CONTACT RIGHT OF WAY ENGINEERING AT THE DISTRICT OFFICE.

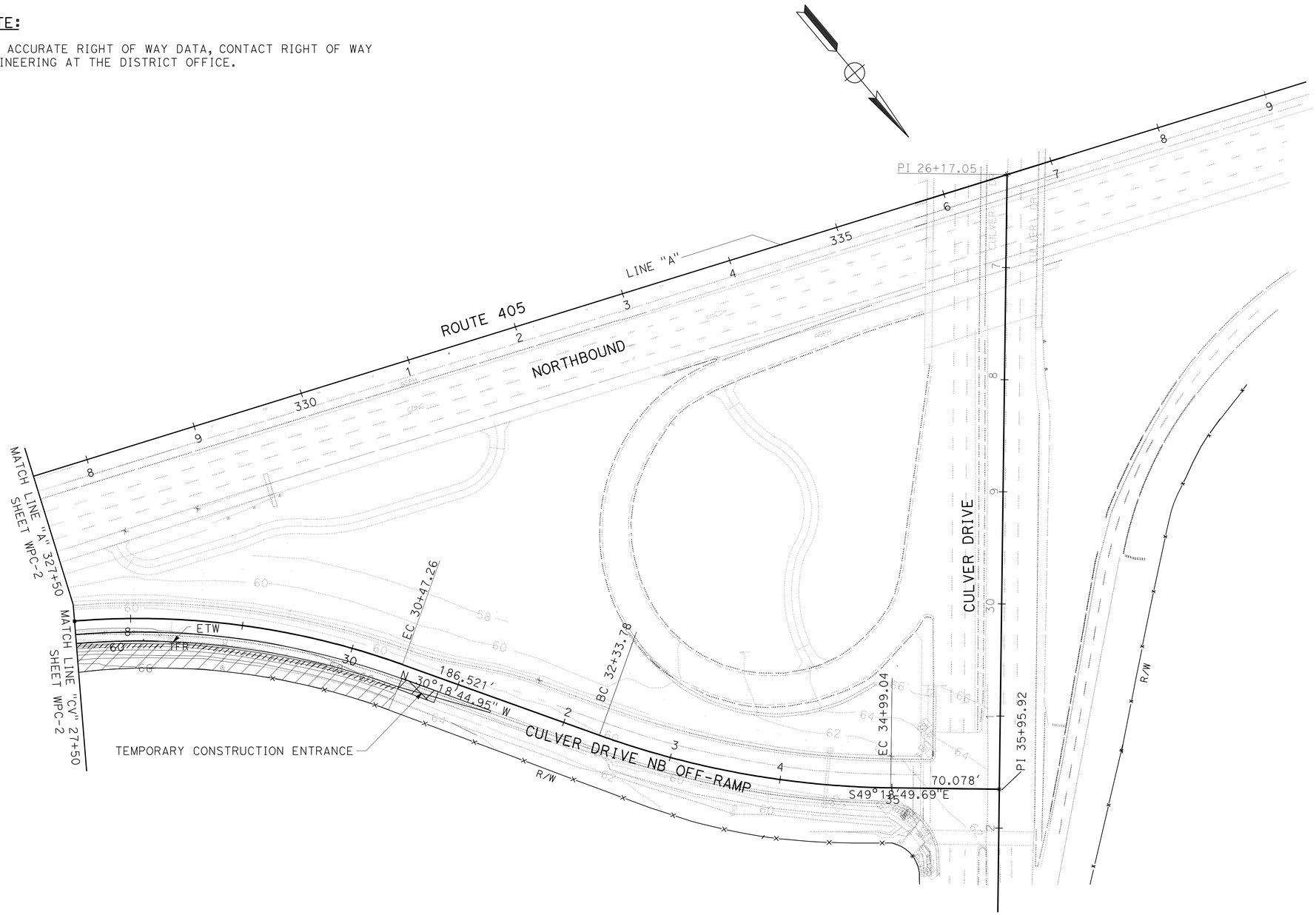

TEMPORARY WATER POLLUTION CONTROL PLAN

SCALE: 1" = 50'

WPC-3

APPROVED FOR TEMPORARY WATER POLLUTION CONTROL WORK ONLY

REVISED BY	DATE REVISED
DUNG PHAN	BEN IONESCU
CALCULATED-DESIGNED BY	CHECKED BY
FUNCTIONAL SUPERVISOR	KAMRAN MAZHAR

STATE OF CALIFORNIA - DEPARTMENT OF TRANSPORTATION
Caltrans® DESIGN DIVISION

LAST REVISION 00-00-00 | DATE PLOTTED => 30-MAY-2012 | TIME PLOTTED => 13:31

Dist	COUNTY	ROUTE	POST MILES TOTAL PROJECT	SHEET No.	TOTAL SHEETS
12	Ora	405	5.0/5.6	14	92

REGISTERED CIVIL ENGINEER 05-10-12 DATE

5-29-12
PLANS APPROVAL DATE

REGISTERED PROFESSIONAL ENGINEER MY-LINH DUVAN No. C 54928 Exp. 06/30/12 CIVIL STATE OF CALIFORNIA

THE STATE OF CALIFORNIA OR ITS OFFICERS OR AGENTS SHALL NOT BE RESPONSIBLE FOR THE ACCURACY OR COMPLETENESS OF SCANNED COPIES OF THIS PLAN SHEET.

NOTE:

FOR ACCURATE RIGHT OF WAY DATA, CONTACT RIGHT OF WAY ENGINEERING AT THE DISTRICT OFFICE.

LEGEND:

- DRAINAGE SYSTEM No.
- DRAINAGE UNIT
- CURVE DATA
- / WITH

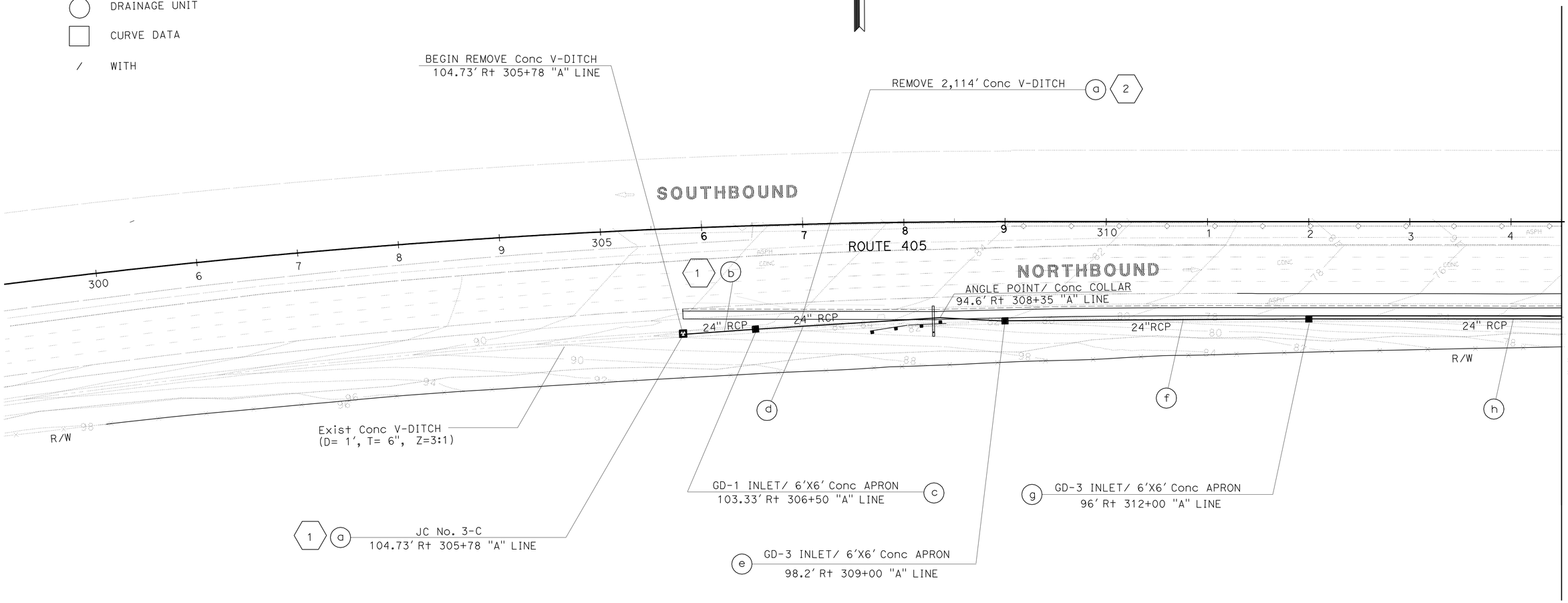

DRAINAGE PLAN

SCALE: 1" = 50'

D-1

APPROVED FOR DRAINAGE WORK ONLY

REVISED BY | DATE REVISED

MY-LINH DUVAN | TAN T NGUYEN

CALCULATED-DESIGNED BY | CHECKED BY

FUNCTIONAL SUPERVISOR: KATHY LOWE

STATE OF CALIFORNIA - DEPARTMENT OF TRANSPORTATION

Caltrans

HYDRAULICS

LAST REVISION 05-07-12 | DATE PLOTTED => 30-MAY-2012 | TIME PLOTTED => 13:31

Dist	COUNTY	ROUTE	POST MILES TOTAL PROJECT	SHEET No.	TOTAL SHEETS
12	Ora	405	5.0/5.6	15	92

REGISTERED CIVIL ENGINEER 05-10-12 DATE

5-29-12
PLANS APPROVAL DATE

REGISTERED PROFESSIONAL ENGINEER MY-LINH DUVAN No. C54928 Exp. 06/30/12 CIVIL STATE OF CALIFORNIA

THE STATE OF CALIFORNIA OR ITS OFFICERS OR AGENTS SHALL NOT BE RESPONSIBLE FOR THE ACCURACY OR COMPLETENESS OF SCANNED COPIES OF THIS PLAN SHEET.

NOTE:

FOR ACCURATE RIGHT OF WAY DATA, CONTACT RIGHT OF WAY ENGINEERING AT THE DISTRICT OFFICE.

CURVE DATA

No.	R	Δ	T	L
1	150.00	12°44'44"	16.75	33.37

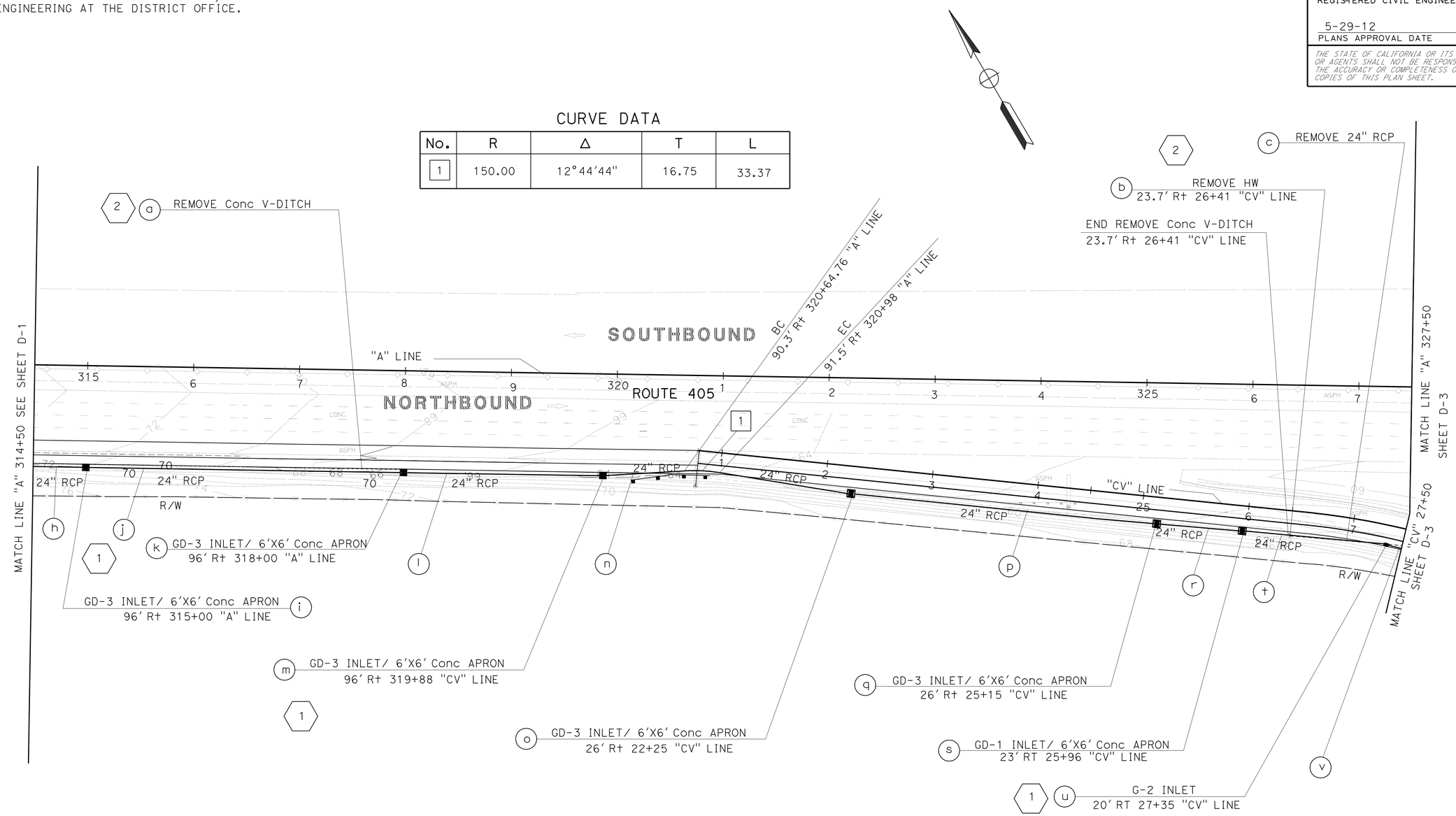

DRAINAGE PLAN

SCALE: 1" = 50'

D-2

APPROVED FOR DRAINAGE WORK ONLY

STATE OF CALIFORNIA - DEPARTMENT OF TRANSPORTATION
Caltrans® HYDRAULICS

FUNCTIONAL SUPERVISOR: KATHY LOWE
CALCULATED-DESIGNED BY: MY-LINH DUVAN
CHECKED BY: TAN T NGUYEN
REVISED BY
DATE REVISED

LAST REVISION 05-07-12
DATE PLOTTED => 30-MAY-2012
TIME PLOTTED => 13:31

Dist	COUNTY	ROUTE	POST MILES TOTAL PROJECT	SHEET No.	TOTAL SHEETS
12	Ora	405	5.0/5.6	16	92

REGISTERED CIVIL ENGINEER 05-10-12 DATE

5-29-12
PLANS APPROVAL DATE

REGISTERED PROFESSIONAL ENGINEER MY-LINH DUVAN No. C54928 Exp. 06/30/12 CIVIL STATE OF CALIFORNIA

THE STATE OF CALIFORNIA OR ITS OFFICERS OR AGENTS SHALL NOT BE RESPONSIBLE FOR THE ACCURACY OR COMPLETENESS OF SCANNED COPIES OF THIS PLAN SHEET.

NOTE:

FOR ACCURATE RIGHT OF WAY DATA, CONTACT RIGHT OF WAY ENGINEERING AT THE DISTRICT OFFICE.

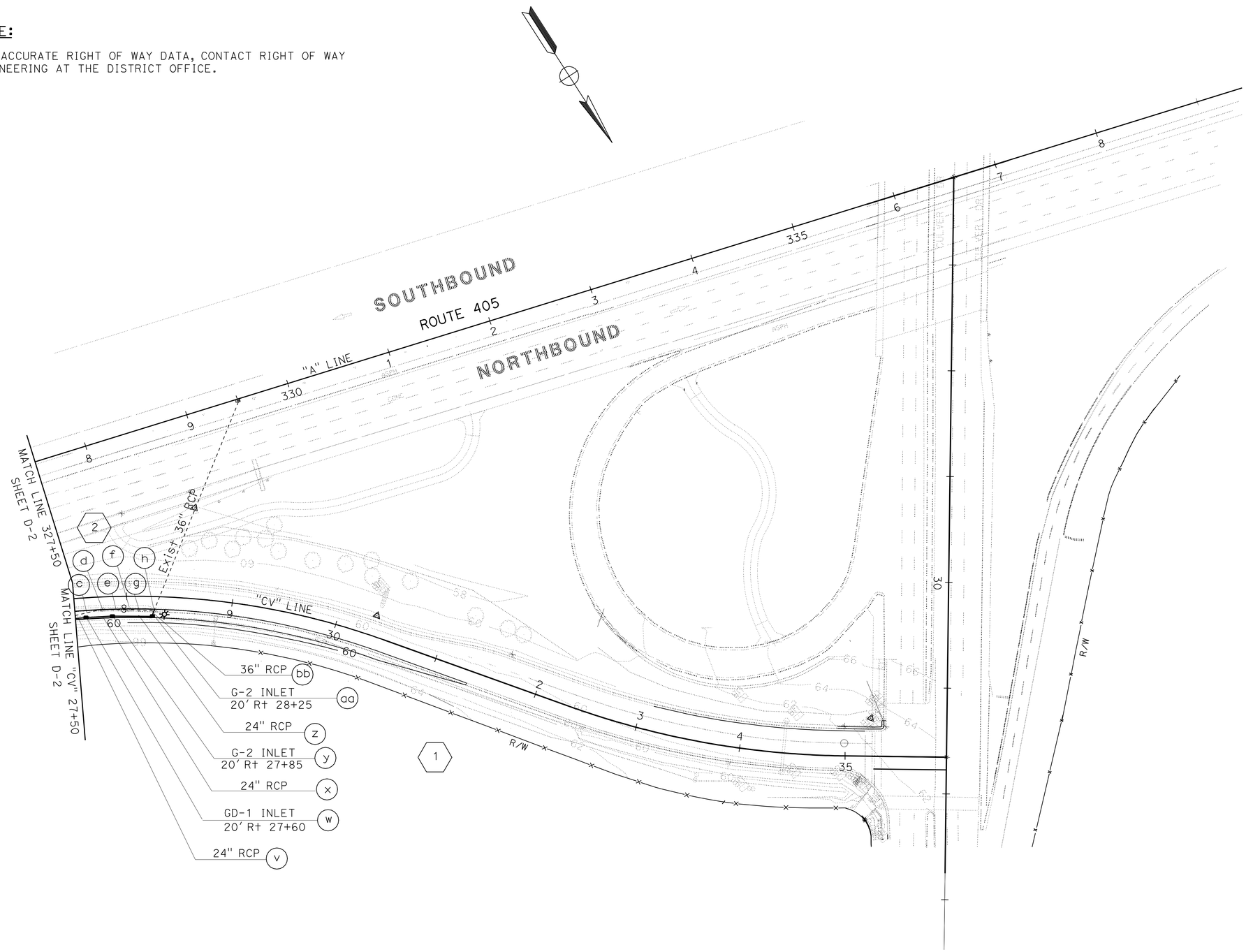

DRAINAGE PLAN

SCALE: 1" = 50'

D-3

APPROVED FOR DRAINAGE WORK ONLY

STATE OF CALIFORNIA - DEPARTMENT OF TRANSPORTATION
Caltrans
HYDRAULICS

FUNCTIONAL SUPERVISOR: KATHY LOWE
CALCULATED-DESIGNED BY: MY-LINH DUVAN
CHECKED BY: TAN T NGUYEN
REVISED BY
DATE REVISED

LAST REVISION 05-07-12
DATE PLOTTED => 30-MAY-2012
TIME PLOTTED => 13:31

Dist	COUNTY	ROUTE	POST MILES TOTAL PROJECT	SHEET No.	TOTAL SHEETS
12	Ora	405	5.0/5.6	17	92

REGISTERED CIVIL ENGINEER 05-10-12 DATE

5-29-12
PLANS APPROVAL DATE

REGISTERED PROFESSIONAL ENGINEER MY-LINH DUVAN No. C 54928 Exp. 06/30/12 CIVIL STATE OF CALIFORNIA

THE STATE OF CALIFORNIA OR ITS OFFICERS OR AGENTS SHALL NOT BE RESPONSIBLE FOR THE ACCURACY OR COMPLETENESS OF SCANNED COPIES OF THIS PLAN SHEET.

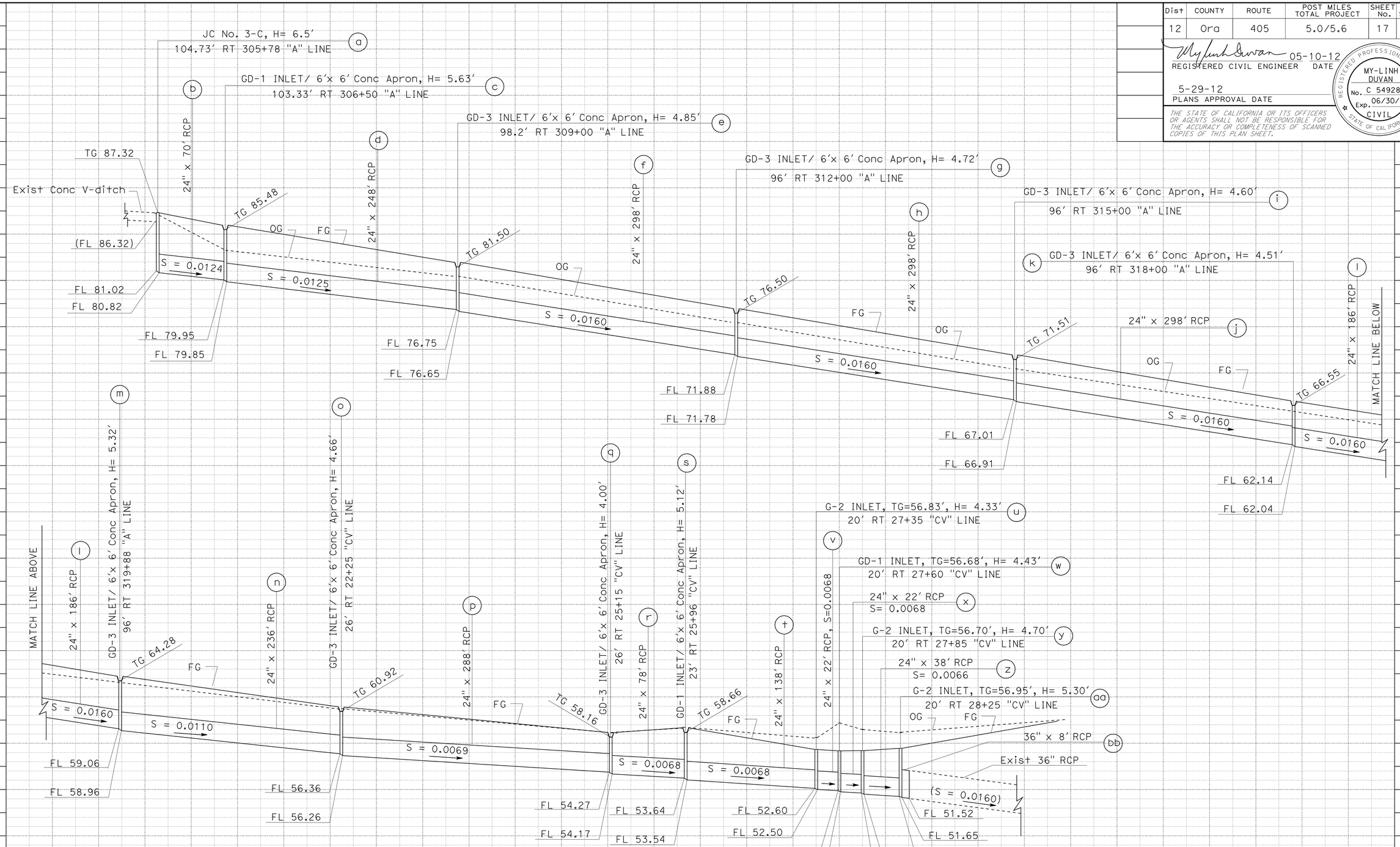

DRAINAGE SYSTEM No. 1

DRAINAGE PROFILES

SCALE: Horiz 1" = 50′
Vert 1" = 5′

DP-1

STATION		TOTAL
CY	Exc	
	Emb	

STATE OF CALIFORNIA - DEPARTMENT OF TRANSPORTATION
Caltrans
HYDRAULICS

FUNCTIONAL SUPERVISOR: KATHY LOWE
CALCULATED-DESIGNED BY: MY-LINH DUVAN
CHECKED BY: TAN T NGUYEN
REVISED BY / DATE REVISED

LAST REVISION 00-00-00
DATE PLOTTED => 30-MAY-2012
TIME PLOTTED => 13:31

Dist	COUNTY	ROUTE	POST MILES TOTAL PROJECT	SHEET No.	TOTAL SHEETS
12	Ora	405	5.0/5.6	18	92

REGISTERED CIVIL ENGINEER 05-10-12 DATE

5-29-12
PLANS APPROVAL DATE

REGISTERED PROFESSIONAL ENGINEER MY-LINH DUVAN No. C 54928 Exp. 06/30/12 CIVIL STATE OF CALIFORNIA

THE STATE OF CALIFORNIA OR ITS OFFICERS OR AGENTS SHALL NOT BE RESPONSIBLE FOR THE ACCURACY OR COMPLETENESS OF SCANNED COPIES OF THIS PLAN SHEET.

LEGEND CONTROL POINT

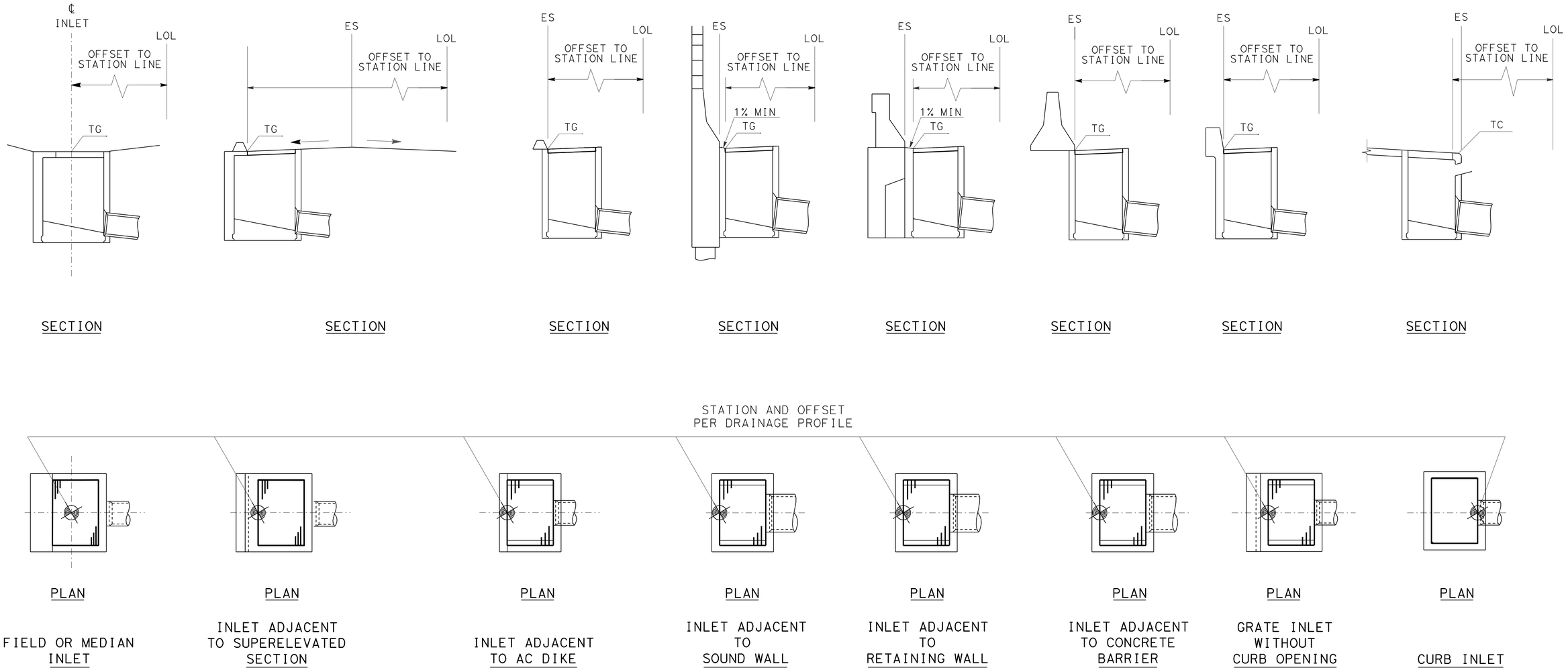

LAYOUT CONTROL POINT DETAIL

DRAINAGE DETAILS

NO SCALE

DD-1

STATE OF CALIFORNIA - DEPARTMENT OF TRANSPORTATION
Caltrans® HYDRAULICS

FUNCTIONAL SUPERVISOR: KATHY LOWE

CALCULATED-DESIGNED BY: MY-LINH DUVAN
CHECKED BY: TAN T NGUYEN

REVISED BY | DATE REVISED

LAST REVISION 00-00-00 | DATE PLOTTED => 30-MAY-2012 | TIME PLOTTED => 13:31

Dist	COUNTY	ROUTE	POST MILES TOTAL PROJECT	SHEET No.	TOTAL SHEETS
12	Ora	405	5.0/5.6	19	92

REGISTERED CIVIL ENGINEER 05-10-12 DATE

5-29-12
PLANS APPROVAL DATE

REGISTERED PROFESSIONAL ENGINEER MY-LINH DUVAN No. C 54928 Exp. 06/30/12 CIVIL STATE OF CALIFORNIA

THE STATE OF CALIFORNIA OR ITS OFFICERS OR AGENTS SHALL NOT BE RESPONSIBLE FOR THE ACCURACY OR COMPLETENESS OF SCANNED COPIES OF THIS PLAN SHEET.

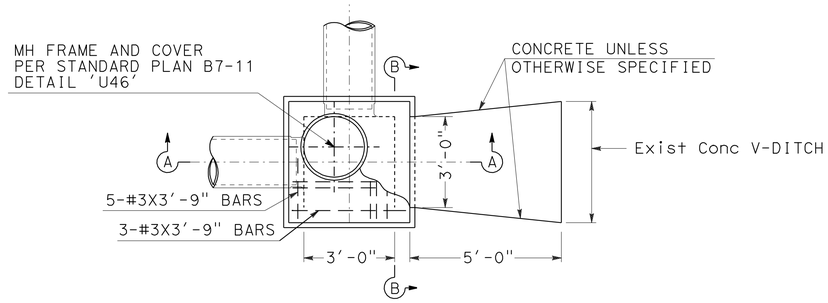

PLAN

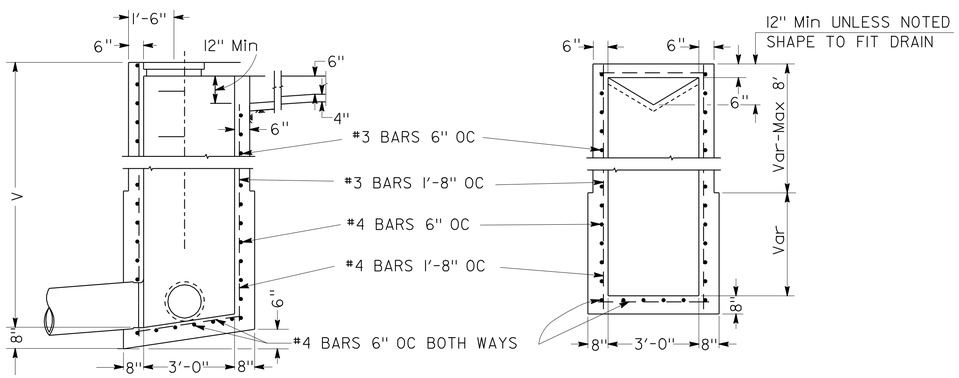

SECTION A-A

SECTION B-B

JUNCTION CHAMBER NO 3-C (JC 3-C)

NOTES:

1. CONNECTION PIPES MAY BE PLACED IN ANY POSITION AROUND THE WALLS PROVIDED THEY POINT IN THE PROPER DIRECTION AND THE POSITION IS OTHERWISE CONSISTENT WITH THE DRAINAGE PLAN.
2. DIMENSIONS: D=18" UNLESS OTHERWISE SPECIFIED.
   V=3'-6" UNLESS OTHERWISE SPECIFIED.
3. EXPOSED SURFACE OF THE JUNCTION CHAMBER SHALL CONFORM IN SLOPE, GRADE, COLOR, FINISH AND SCORING TO EXISTING SIDEWALK ADJACENT TO THE JUNCTION CHAMBER. WHERE NO SIDEWALK EXISTS, THE TOP SHALL BE FINISHED TO CONFORM TO STANDARD SIDEWALK SLOPEAND FINISH, AND SCORING LINES SHALL CONFORM AS NEARLY AS POSSIBLE TO 20" SQUARES.
4. FLOOR OF CHAMBER SHALL BE GIVEN A STEEL-TROWELED FINISH AND SHALL SLOPE FROM ALL DIRECTIONS TO OUTLET.
5. MANHOLE SHALL BE PLACED IN CORNER NEAREST OUTLET.
6. OUTLET PIPE SHALL BE CONNECTED TO JUNCTION CHAMBER WITH MONOLITHIC CONNECTION.
7. REINFORCING STEEL NOT REQUIRED IN WALLS WHEN V=6' OR LESS.
8. STEPS: NONE REQUIRED WHERE V=3'-6" OR LESS.
   INSTALL ONE STEP 16"± ABOVE FLOOR WHEN V IS MORE THAN 3'-6" AND LESS THAN 5'-0".
   WHERE V IS MORE THAN 5'-0" STEPS SHALL BE EVENLY SPACED AT 12"± INTERVALS FROM 16"± ABOVE FLOOR TO WITHIN 12"± OF THE TOP OF THE BOX.

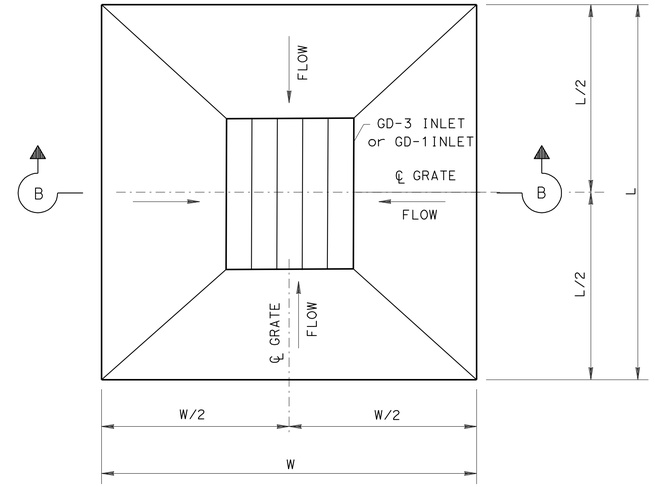

PLAN

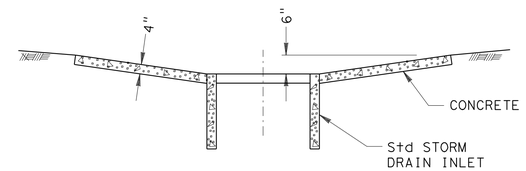

SECTION B-B

CONCRETE APRON

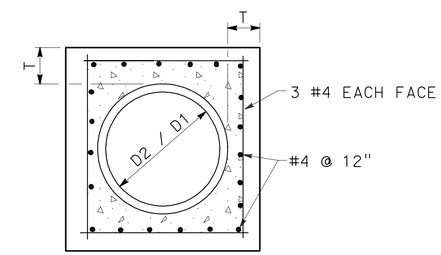

SECTION B-B

D	L	T
18"	1.0'	5"
24"	1.0'	6"
36"	1.5'	8"

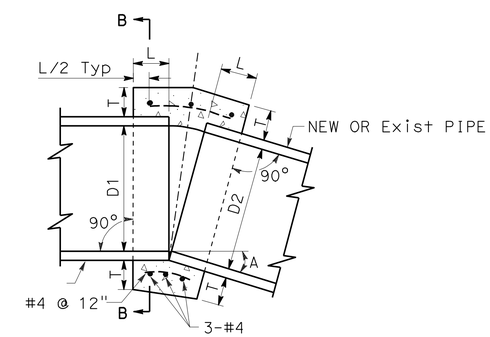

CONCRETE COLLAR

NOTES:

1. WHERE PIPES OF DIFFERENT DIAMETERS ARE JOINED WITH A CONCRETE COLLAR, 'L' AND 'T' SHALL BE THOSE OF THE LARGER PIPE. D=D1 OR D2, WHICHEVER IS GREATER.
2. FOR PIPE SIZE NOT LISTED USE NEXT SIZE LARGER.
3. OMIT REINFORCING ON PIPES 24" AND LESS IN DIAMETER AND ON ALL PIPES WHERE ANGLE A IS LESS THAN 10°.
4. JOIN PIPES AT INVERTS.
5. REINFORCEMENT SHALL BE PLACED 1½" CLEAR FROM OUTSIDE DIAMETER OF PIPE.

DRAINAGE DETAILS

NO SCALE

DD-2

REVISED BY | DATE REVISED
MY-LINH DUVAN | TAN T NGUYEN
CALCULATED-DESIGNED BY | CHECKED BY
FUNCTIONAL SUPERVISOR | KATHY LOWE
STATE OF CALIFORNIA - DEPARTMENT OF TRANSPORTATION
Caltrans | HYDRAULICS

LAST REVISION 00-00-00 | DATE PLOTTED => 30-MAY-2012 | TIME PLOTTED => 13:31

Dist	COUNTY	ROUTE	POST MILES TOTAL PROJECT	SHEET No.	TOTAL SHEETS
12	Ora	405	5.0/5.6	20	92

REGISTERED CIVIL ENGINEER 05-10-12 DATE

5-29-12
PLANS APPROVAL DATE

REGISTERED PROFESSIONAL ENGINEER MY-LINH DUVAN No. C 54928 Exp. 06/30/12 CIVIL STATE OF CALIFORNIA

THE STATE OF CALIFORNIA OR ITS OFFICERS OR AGENTS SHALL NOT BE RESPONSIBLE FOR THE ACCURACY OR COMPLETENESS OF SCANNED COPIES OF THIS PLAN SHEET.

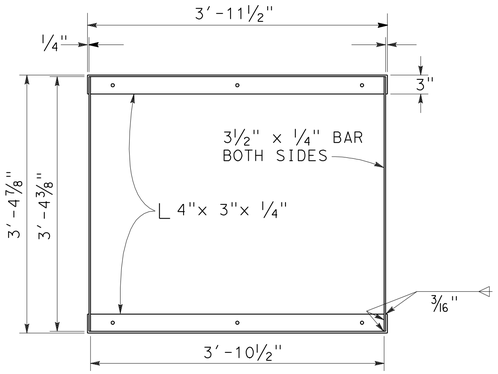

GRATE FRAME DETAIL

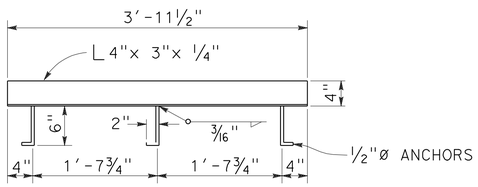

ANCHOR PLACEMENT DETAIL

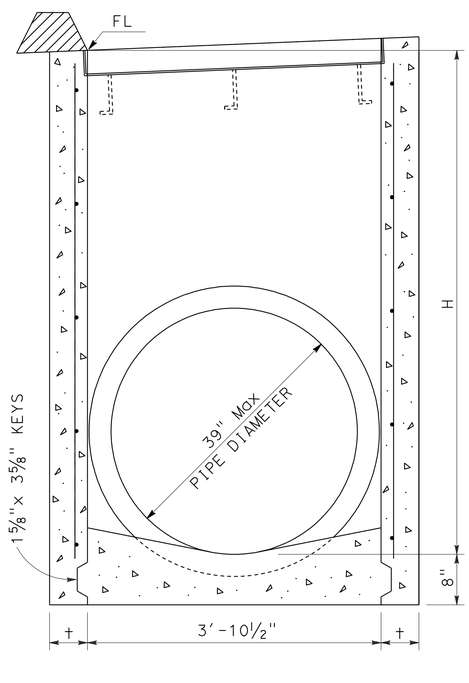

SECTION A-A
(FOR PIPE DIAMETERS 39" OR LESS)

GD-1

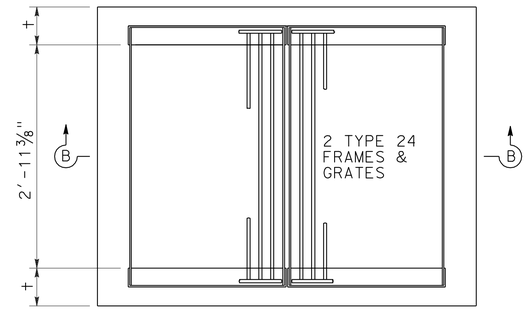

PLAN

FOR GRATE, FRAME AND ANCHOR PLACEMENT DETAILS, SEE STANDARD PLANS D77-A AND D77-B.

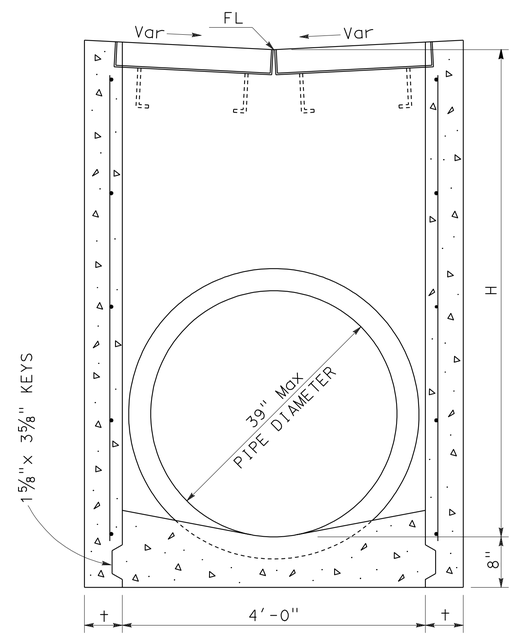

SECTION B-B
(FOR PIPE DIAMETERS 39" OR LESS)

GD-3

DRAINAGE INLETS

NOTES:

1. 'H' IS THE DIFFERENCE IN ELEVATION BETWEEN THE OUTLET PIPE FLOW LINE AND THE FLOW LINE OF THE GRATES.
2. STEPS - NONE REQUIRED WHEN 'H' IS 3'-6" OR LESS. INSTALL ONE STEP 16"± ABOVE FLOOR WHEN 'H' IS MORE THAN 3'-6" AND LESS THAN 5'-0". WHERE 'H' IS MORE THAN 5'-0" STEPS SHALL BE EVENLY SPACED @ 12"± INTERVALS FROM 16"± ABOVE FLOOR TO WITHIN 12"± OF THE TOP OF THE BOX. PLACE STEPS IN WALL WITHOUT PIPE OPENINGS. SEE STANDARD PLAN D74C FOR STEP DETAIL.
3. PIPE(S) CAN BE PLACED IN ANY WALL.
4. REINFORCING STEEL NOT REQUIRED IN WALLS WHEN H=6' OR LESS.
5. REINFORCING STEEL IN WALLS SHALL BE #4 BARS @ 18"± CENTERS PLACED 1½" CLEAR TO INSIDE OF BOX.

MISCELLANEOUS IRON & STEEL

Inlet Type	Grate Type	Weight
GD-1	24 - 12	580
GD-3	24 - 12	652

H	t
8'-0" or less	6"
8'1" to 20'- 0"	8"

DRAINAGE DETAILS

NO SCALE

DD-3

STATE OF CALIFORNIA - DEPARTMENT OF TRANSPORTATION
Caltrans HYDRAULICS
FUNCTIONAL SUPERVISOR: KATHY LOWE
CALCULATED-DESIGNED BY: MY-LINH DUVAN
CHECKED BY: TAN T NGUYEN
REVISED BY / DATE REVISED

LAST REVISION 00-00-00 | DATE PLOTTED => 30-MAY-2012 | TIME PLOTTED => 13:32

Dist	COUNTY	ROUTE	POST MILES TOTAL PROJECT	SHEET No.	TOTAL SHEETS
12	Ora	405	5.0/5.6	21	92

REGISTERED CIVIL ENGINEER 05-10-12 DATE

5-29-12
PLANS APPROVAL DATE

REGISTERED PROFESSIONAL ENGINEER MY-LINH DUVAN No. C 54928 Exp. 06/30/12 CIVIL STATE OF CALIFORNIA

THE STATE OF CALIFORNIA OR ITS OFFICERS OR AGENTS SHALL NOT BE RESPONSIBLE FOR THE ACCURACY OR COMPLETENESS OF SCANNED COPIES OF THIS PLAN SHEET.

ABBREVIATIONS:

S STANDARD JOINT TYPE
/ WITH
(N) NOT A SEPARATE PAY ITEM, FOR INFORMATION ONLY

DRAINAGE SYSTEM NUMBER	DRAINAGE UNIT	MINOR CONCRETE (MINOR STRUCTURE) CY	MISCELLANEOUS IRON AND STEEL LB	FRAME & GRATE (24-12) (N) EA	MANHOLE FRAME & COVER (N) EA	REMOVE CONCRETE (CHANNEL) LF	REMOVE HEADWALL EA	REMOVE INLET EA	REMOVE PIPE LF	24" REINFORCED CONCRETE PIPE LF	36" REINFORCED CONCRETE PIPE LF	PIPE JOINT CLASSIFICATION	"H" OR "V" FT	MAXIMUM COVER FT	DESCRIPTION	STATION	DRAINAGE PLAN SHEET No.	DRAINAGE SYSTEM NUMBER	DRAINAGE UNIT
1	a	2.40	235		1								6.50		JC No. 3-C	104.73′ R+ 305+78 "A" LINE	D-1	1	a
	b									70		S		4.50	24" x 70′ RCP				b
	c	2.56	580	2									5.63		GD-1 INLET/ 6′x6′ Conc APRON	103.33′ R+ 306+50 "A" LINE			c
	d									248		S		3.63	24" x 248′ RCP				d
	e	2.36	652	2									4.85		GD-3 INLET/ 6′x6′ Conc APRON	98.20′ R+ 309+00 "A" LINE			e
	f									298		S		2.85	24" x 298′ RCP				f
	g	2.32	652	2									4.72		GD-3 INLET/ 6′x6′ Conc APRON	96′ R+ 312+00 "A" LINE			g
	h									298		S		2.72	24" x 298′ RCP				h
	i	2.28	652	2									4.60		GD-3 INLET/ 6′x6′ Conc APRON	96′ R+ 315+00 "A" LINE	D-2		i
	j									298		S		2.60	24" x 298′ RCP				j
	k	2.25	652	2									4.51		GD-3 INLET/ 6′x6′ Conc APRON	96′ R+ 318+00 "A" LINE			k
	l									186		S		3.32	24" x 186′ RCP				l
	m	2.50	652	2									5.32		GD-3 INLET/ 6′x6′ Conc APRON	96′ R+ 319+88 "A" LINE			m
	n									236		S		3.32	24" x 236′ RCP				n
	o	2.30	652	2									4.66		GD-3 INLET/ 6′x6′ Conc APRON	26′ R+ 22+25 "CV" LINE			o
	p									288		S		2.66	24" x 288′ RCP				p
	q	2.11	652	2									4.00		GD-3 INLET/ 6′x6′ Conc APRON	26′ R+ 25+15 "CV" LINE			q
	r									78		S		3.12	24" x 78′ RCP				r
	s	2.41	580	2									5.12		GD-1 INLET/ 6′x6′ Conc APRON	23′ R+ 25+96 "CV" LINE			s
	t									138		S		3.12	24" x 138′ RCP				t
	u	1.65	326	1									4.33		G-2 INLET	20′ R+ 27+35 "CV" LINE			u
	v									22		S		2.33	24" x 22′ RCP				v
	w	1.77	580	2									4.43		GD-1 INLET	20′ RT 27+60 "CV" LINE	D-3		w
	x									22		S		2.43	24" x 22′ RCP				x
	y	1.74	326	1									4.70		G-2 INLET	20′ R+ 27+85 "CV" LINE			y
	z									38		S		3.30	24" x 38′ RCP				z
	aa	1.90	326	1									5.30		G-2 INLET	20′ R+ 28+25 "CV" LINE			aa
	bb										8	S		2.30	36" x 8′ RCP				bb
SHEET TOTAL		30.55	7,517	23	1					2,220	8								

DRAINAGE QUANTITIES
DQ-1

STATE OF CALIFORNIA - DEPARTMENT OF TRANSPORTATION
Caltrans HYDRAULICS

FUNCTIONAL SUPERVISOR: KATHY LOWE
CALCULATED-DESIGNED BY: MY-LINH DUVAN
CHECKED BY: TAN T NGUYEN
REVISED BY
DATE REVISED

LAST REVISION 05-07-12
DATE PLOTTED => 30-MAY-2012
TIME PLOTTED => 13:32

Dist	COUNTY	ROUTE	POST MILES TOTAL PROJECT	SHEET No.	TOTAL SHEETS
12	Ora	405	5.0/5.6	22	92

REGISTERED CIVIL ENGINEER 05-10-12 DATE

5-29-12
PLANS APPROVAL DATE

REGISTERED PROFESSIONAL ENGINEER
MY-LINH DUVAN
No. C 54928
Exp. 06/30/12
CIVIL
STATE OF CALIFORNIA

THE STATE OF CALIFORNIA OR ITS OFFICERS OR AGENTS SHALL NOT BE RESPONSIBLE FOR THE ACCURACY OR COMPLETENESS OF SCANNED COPIES OF THIS PLAN SHEET.

DRAINAGE SYSTEM NUMBER	DRAINAGE UNIT	MINOR CONCRETE (MINOR STRUCTURE) CY	MISCELLANEOUS IRON AND STEEL LB	FRAME & GRATE (24-12) (N) EA	MANHOLE FRAME & COVER (N) EA	REMOVE CONCRETE (CHANNEL) LF	REMOVE HEADWALL EA	REMOVE INLET EA	REMOVE PIPE LF	24" REINFORCED CONCRETE PIPE LF	36" REINFORCED CONCRETE PIPE LF	PIPE JOINT CLASSIFICATION	"H" OR "V" FT	MAXIMUM COVER FT	DESCRIPTION	STATION	DRAINAGE PLAN SHEET No.	DRAINAGE SYSTEM NUMBER	DRAINAGE UNIT
2	a					2,114									REMOVE Conc V-DITCH	FROM Sta 305+78 "A" LINE TO Sta 26+41 "CV" LINE	D-1	2	a
	b						1								REMOVE HW	23.7′ R+ 26+41 "CV" LINE	D-2		b
	c								130						REMOVE 24" RCP		D-3		c
	d							1							REMOVE INLET	13′ R+ 27+75 "CV" LINE			d
	e								22						REMOVE 24" RCP				e
	f							1							REMOVE INLET	14′ R+ 28+00 "CV" LINE			f
	g								22						REMOVE 24" RCP				g
	h							1							REMOVE INLET	14.6′ R+ 28+26 "CV" LINE			h
SHEET TOTAL						2,114	1	3	174										
TOTAL		30.55	7,517	23	1	2,114	1	3	174	2,220	8	-	-	-					

DRAINAGE QUANTITIES

DQ-2

CALCULATED-DESIGNED BY: MY-LINH DUVAN
CHECKED BY: TAN T NGUYEN
REVISED BY
DATE REVISED
FUNCTIONAL SUPERVISOR: KATHY LOWE

STATE OF CALIFORNIA - DEPARTMENT OF TRANSPORTATION
Caltrans
HYDRAULICS

LAST REVISION 05-07-12
DATE PLOTTED => 30-MAY-2012
TIME PLOTTED => 13:32

Dist	COUNTY	ROUTE	POST MILES TOTAL PROJECT	SHEET No.	TOTAL SHEETS
12	Ora	405	5.0/5.6	23	92

REGISTERED CIVIL ENGINEER 05-10-12 DATE

5-29-12
PLANS APPROVAL DATE

REGISTERED PROFESSIONAL ENGINEER
BEN IONESCU
No. C65482
Exp. 09-30-13
CIVIL
STATE OF CALIFORNIA

THE STATE OF CALIFORNIA OR ITS OFFICERS OR AGENTS SHALL NOT BE RESPONSIBLE FOR THE ACCURACY OR COMPLETENESS OF SCANNED COPIES OF THIS PLAN SHEET.

STATIONARY MOUNTED CONSTRUCTION AREA SIGNS

SIGN No.	SIGN CODE	PANEL SIZE	SIGN MESSAGE	No. OF POSTS & POST SIZE	No. OF SIGNS
1	W20-1	4′ X 4′	ROAD WORK AHEAD	(1) - 4" X 6"	1
2	G20-2	5′ X 2′	END ROAD WORK	(1) - 4" X 6"	1

NOTE:

LOCATION OF CONSTRUCTION AREA SIGNS ARE APPROXIMATE, EXACT LOCATIONS TO BE DETERMINED BY THE ENGINEER.

LEGEND:

1 CONSTRUCTION AREA SIGN
CONSTRUCTION AREA SIGN, 1-POST
CONSTRUCTION AREA

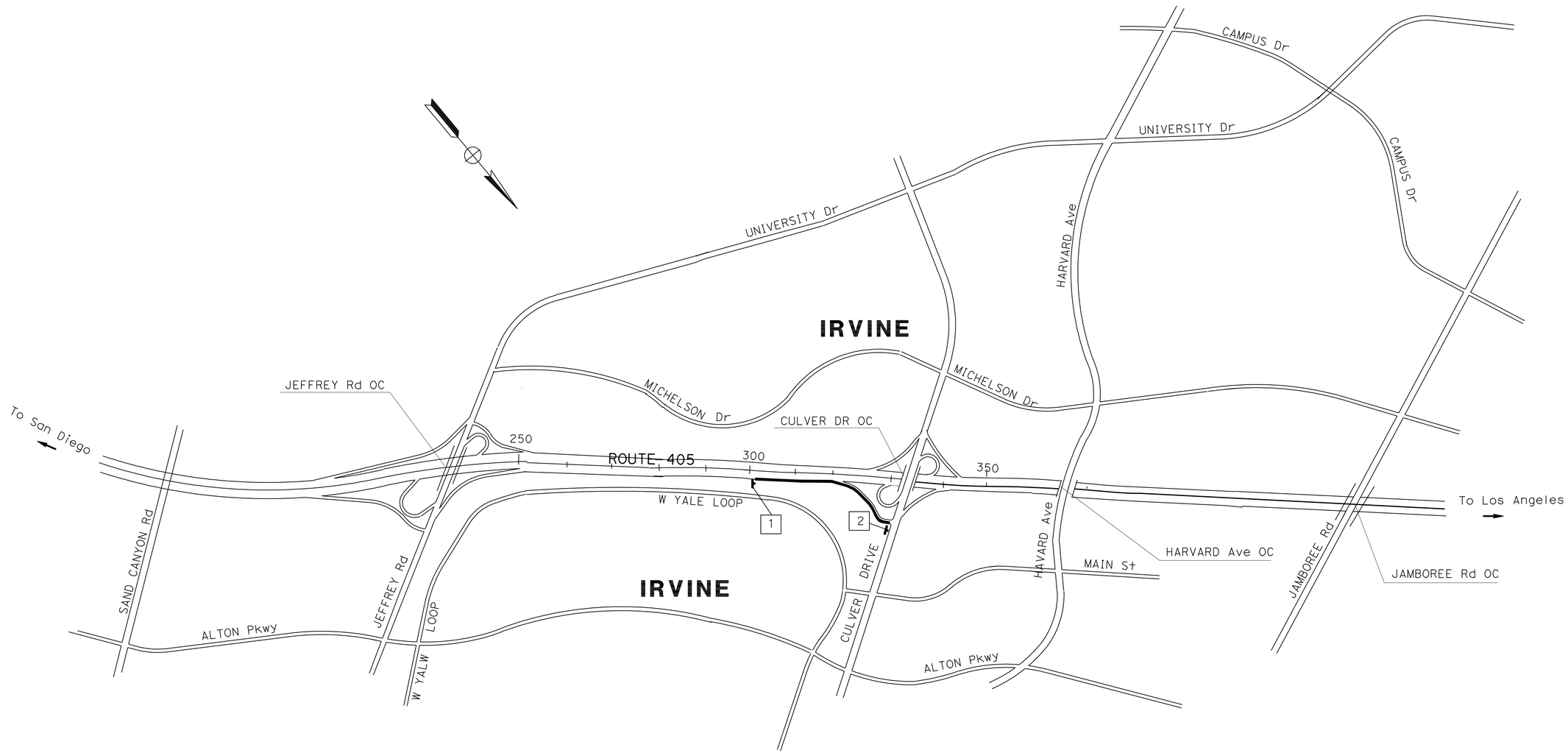

CONSTRUCTION AREA SIGNS

NO SCALE

CS-1

APPROVED FOR CONSTRUCTION AREA SIGN WORK ONLY

STATE OF CALIFORNIA - DEPARTMENT OF TRANSPORTATION
Caltrans DESIGN DIVISION

FUNCTIONAL SUPERVISOR: KAMRAN MAZHAR
CALCULATED-DESIGNED BY: DUNG PHAN
CHECKED BY: BEN IONESCU
REVISED BY
DATE REVISED

LAST REVISION 11-22-10
DATE PLOTTED => 30-MAY-2012
TIME PLOTTED => 13:32

Dist	COUNTY	ROUTE	POST MILES TOTAL PROJECT	SHEET No.	TOTAL SHEETS
12	Ora	405	5.0/5.6	24	92

REGISTERED CIVIL ENGINEER 05-10-12 DATE

5-29-12
PLANS APPROVAL DATE

REGISTERED PROFESSIONAL ENGINEER
BEN IONESCU
No. C65482
Exp. 09-30-13
CIVIL
STATE OF CALIFORNIA

THE STATE OF CALIFORNIA OR ITS OFFICERS OR AGENTS SHALL NOT BE RESPONSIBLE FOR THE ACCURACY OR COMPLETENESS OF SCANNED COPIES OF THIS PLAN SHEET.

NOTES:

1. FOR ACCURATE RIGHT OF WAY DATA, CONTACT RIGHT OF WAY ENGINEERING AT THE DISTRICT OFFICE.
2. 20:1 TAPER SHALL BE USED AT THE END OF ALL TEMPORARY RAILING UNLESS OTHERWISE NOTED.
3. ALL CONFLICTING STRIPING AND PAVEMENT MARKING SHALL BE REMOVED.

ABBREVIATION:

HOV - HIGH OCCUPANCY VEHICLE

LEGEND:

- CHANNELIZER (SURFACE MOUNTED)
- CONSTRUCT THIS STAGE
- TEMPORARY CRASH CUSHION MODULE, ARRAY PER PLAN
- CHANGE OF PAVEMENT DELINEATION DETAIL
- DIRECTION OF TRAFFIC
- X PAINT TRAFFIC STRIPE (2-COAT) DETAIL No.

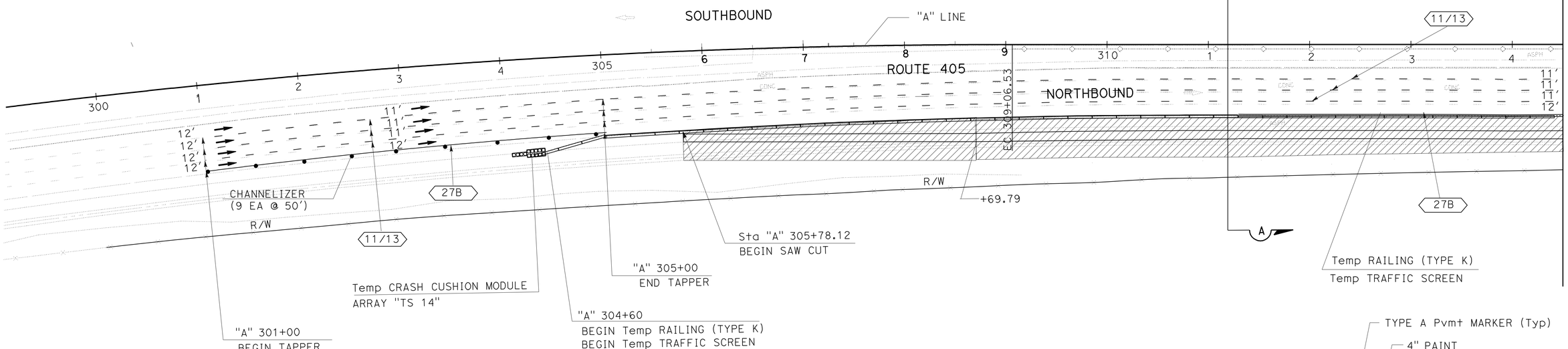

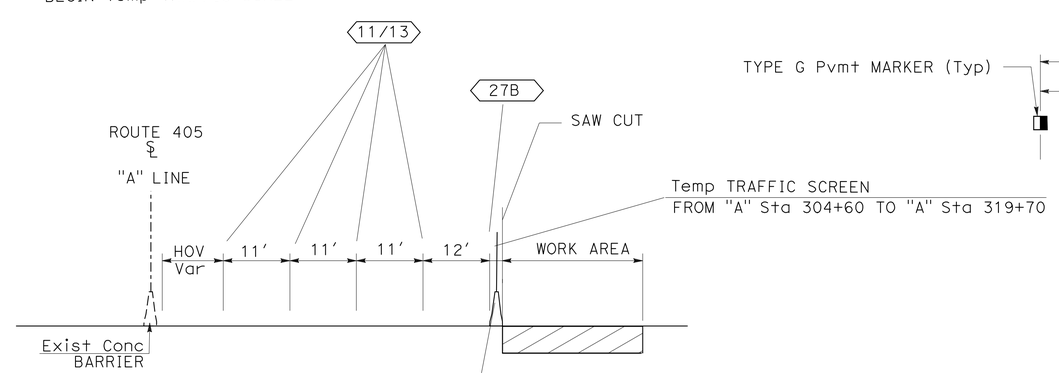

SECTION A-A
NO SCALE

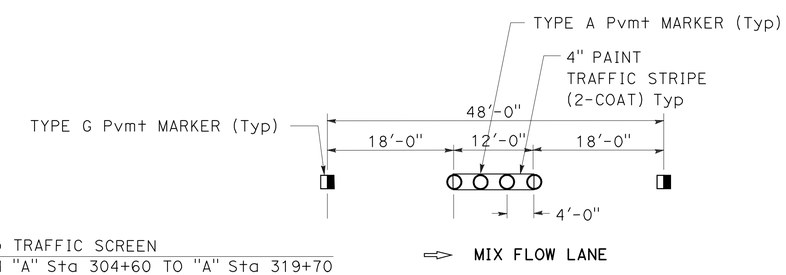

DETAIL 11/13

STAGE 1
STAGE CONSTRUCTION TRAFFIC HANDLING PLAN

SCALE: 1" = 50′

SC-1

APPROVED FOR STAGE CONSTRUCTION WORK ONLY

STATE OF CALIFORNIA - DEPARTMENT OF TRANSPORTATION
Caltrans® DESIGN DIVISION

FUNCTIONAL SUPERVISOR: KAMRAN MAZHAR
CALCULATED-DESIGNED BY: DUNG PHAN
CHECKED BY: BEN IONESCU
REVISED BY / DATE REVISED

LAST REVISION 00-00-00
DATE PLOTTED => 30-MAY-2012
TIME PLOTTED => 13:32

Dist	COUNTY	ROUTE	POST MILES TOTAL PROJECT	SHEET No.	TOTAL SHEETS
12	Ora	405	5.0/5.6	25	92

REGISTERED CIVIL ENGINEER 05-10-12 DATE

5-29-12
PLANS APPROVAL DATE

REGISTERED PROFESSIONAL ENGINEER BEN IONESCU No. C65482 Exp. 09-30-13 CIVIL STATE OF CALIFORNIA

THE STATE OF CALIFORNIA OR ITS OFFICERS OR AGENTS SHALL NOT BE RESPONSIBLE FOR THE ACCURACY OR COMPLETENESS OF SCANNED COPIES OF THIS PLAN SHEET.

NOTE:

FOR ACCURATE RIGHT OF WAY DATA, CONTACT RIGHT OF WAY ENGINEERING AT THE DISTRICT OFFICE.

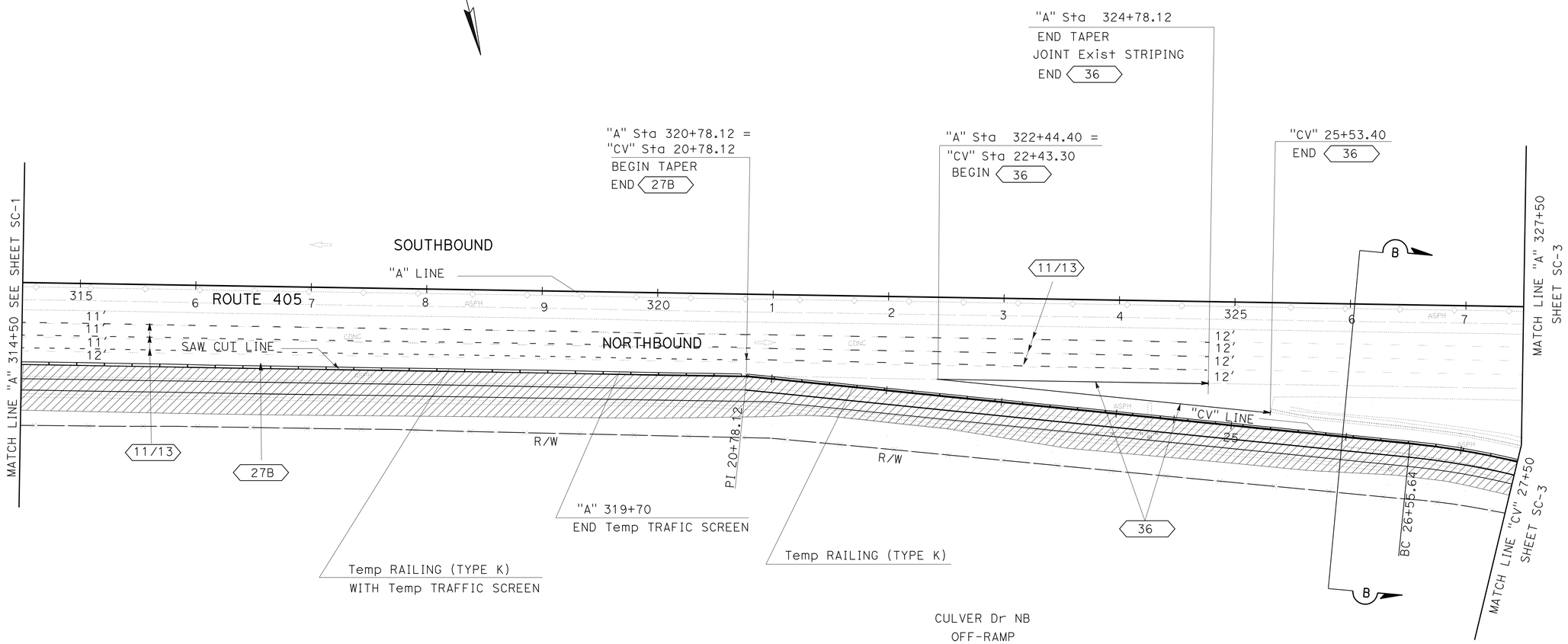

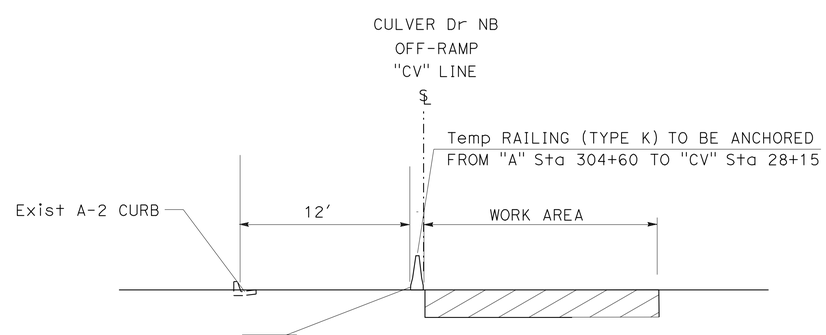

SECTION B-B
NO SCALE

STAGE 1
STAGE CONSTRUCTION TRAFFIC HANDLING PLAN

SCALE: 1" = 50'

SC-2

APPROVED FOR STAGE CONSTRUCTION WORK ONLY

REVISED BY	DATE REVISED

CALCULATED-DUNG PHAN
DESIGNED BY BEN IONESCU
CHECKED BY
FUNCTIONAL SUPERVISOR KAMRAN MAZHAR

STATE OF CALIFORNIA - DEPARTMENT OF TRANSPORTATION
Caltrans® DESIGN DIVISION

LAST REVISION 00-00-00
DATE PLOTTED => 30-MAY-2012
TIME PLOTTED => 13:32

Dist	COUNTY	ROUTE	POST MILES TOTAL PROJECT	SHEET No.	TOTAL SHEETS
12	Ora	405	5.0/5.6	26	92

REGISTERED CIVIL ENGINEER 05-10-12 DATE

5-29-12
PLANS APPROVAL DATE

REGISTERED PROFESSIONAL ENGINEER
BEN IONESCU
No. C65482
Exp. 09-30-13
CIVIL
STATE OF CALIFORNIA

THE STATE OF CALIFORNIA OR ITS OFFICERS OR AGENTS SHALL NOT BE RESPONSIBLE FOR THE ACCURACY OR COMPLETENESS OF SCANNED COPIES OF THIS PLAN SHEET.

NOTE:

FOR ACCURATE RIGHT OF WAY DATA, CONTACT RIGHT OF WAY ENGINEERING AT THE DISTRICT OFFICE.

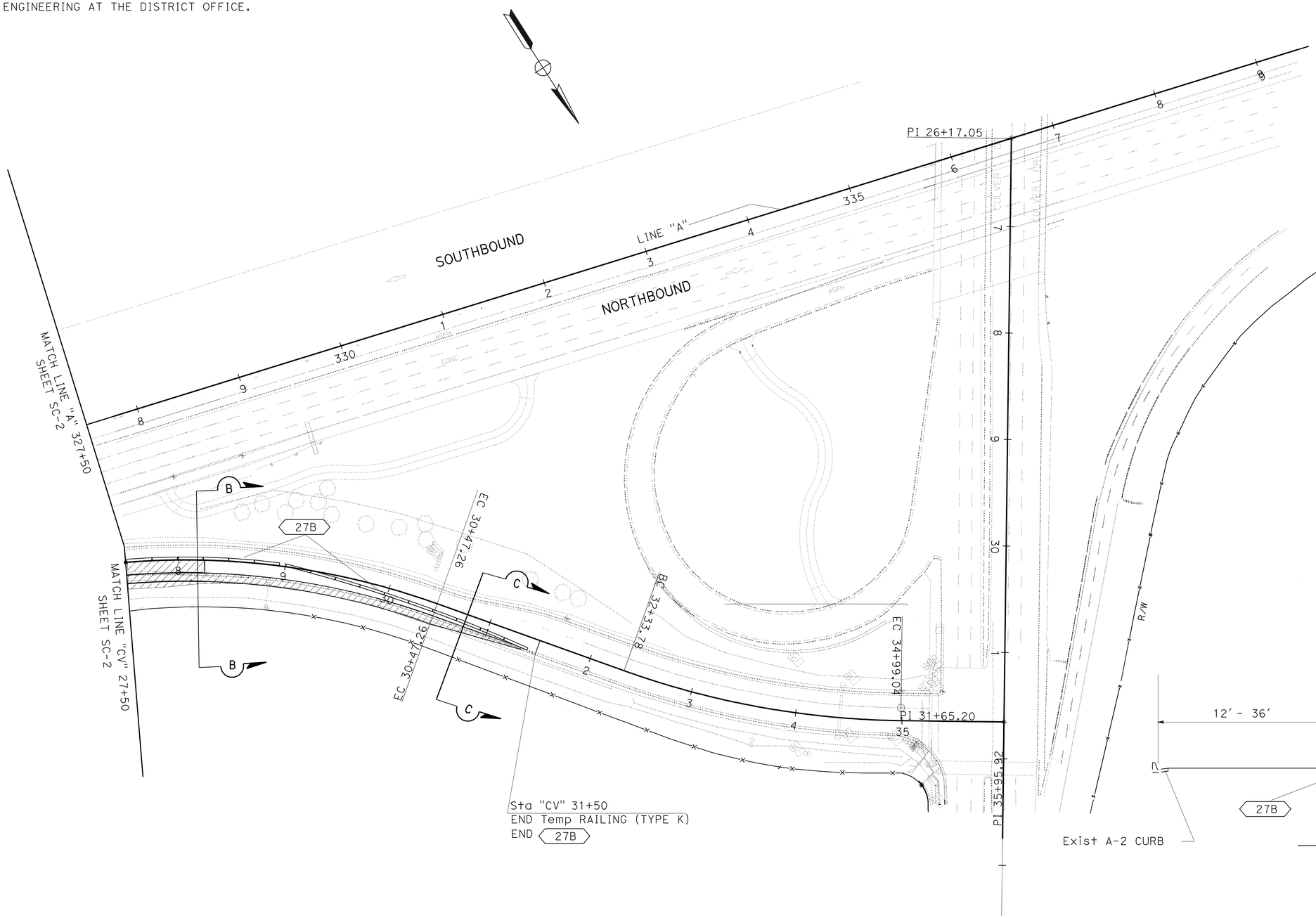

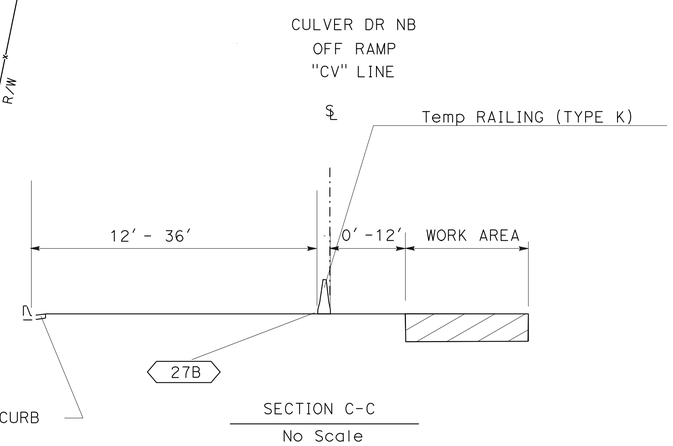

STAGE 1
STAGE CONSTRUCTION
TRAFFIC HANDLING PLAN

SCALE: 1" = 50'

SC-3

APPROVED FOR STAGE CONSTRUCTION WORK ONLY

STATE OF CALIFORNIA - DEPARTMENT OF TRANSPORTATION
Caltrans® DESIGN DIVISION

FUNCTIONAL SUPERVISOR: KAMRAN MAZHAR
CALCULATED-DESIGNED BY: DUNG PHAN
CHECKED BY: BEN IONESCU
REVISED BY
DATE REVISED

LAST REVISION 00-00-00
DATE PLOTTED => 30-MAY-2012
TIME PLOTTED => 12:16

Dist	COUNTY	ROUTE	POST MILES TOTAL PROJECT	SHEET No.	TOTAL SHEETS
12	Ora	405	5.0/5.6	27	92

REGISTERED CIVIL ENGINEER 05-10-12 DATE

5-29-12
PLANS APPROVAL DATE

REGISTERED PROFESSIONAL ENGINEER BEN IONESCU No. C65482 Exp. 09-30-13 CIVIL STATE OF CALIFORNIA

THE STATE OF CALIFORNIA OR ITS OFFICERS OR AGENTS SHALL NOT BE RESPONSIBLE FOR THE ACCURACY OR COMPLETENESS OF SCANNED COPIES OF THIS PLAN SHEET.

STAGE CONSTRUCTION QUANTITIES

SHEET No.	STATION LIMITS	DETAIL No.	PAVEMENT MARKER NON-REFLECTIVE (TYPE A)	PAVEMENT MARKER RETROREFLECTIVE (TYPE G)	PAINT TRAFFIC STRIPE (2-COAT) 4" BROKEN WHITE	PAINT TRAFFIC STRIPE (2-COAT) SOLID WHITE 4"	PAINT TRAFFIC STRIPE (2-COAT) SOLID WHITE 8"	REMOVE PAVEMENT MARKER	REMOVE PAINTED TRAFFIC STRIPE 4" BROKEN WHITE	REMOVE PAINTED TRAFFIC STRIPE SOLID WHITE 4"	REMOVE PAINTED TRAFFIC STRIPE SOLID WHITE 8"	CHANNELIZER (SURFACE MOUNTED)	Temp RAILING (TYPE K)	Temp TRAFFIC SCREEN	Temp CRASH CUSHION MODULE
			EA	EA	LF	LF	LF	EA	LF	LF	LF	EA	LF	LF	EA
SC-1	"A" Sta 301+00.00 TO "A" Sta 305+00.00											9			
	"A" Sta 301+00.00 TO "A" Sta 314+50.00	11/13	84	87	4050			171	1013						14
	"A" Sta 301+00.00 TO "A" Sta 314+50.00	27B				1350				1350			990	990	
L-2	"A" Sta 314+50.00 TO "A" Sta 320+78.12	11/13	52	42	1884			94	471						
	"A" Sta 314+50.00 TO "A" Sta 320+78.12	27B				628				628			628	520	
	"A" Sta 322+44.40 TO "A" Sta 324+78.12	36		10			234	10			468				
	"CV" Sta 20+78.12 TO "A" Sta 27+50.00	27B				672				672			672		
	"CV" Sta 22+43.30 TO "CV" Sta 25+53.40	36		13			310	13			620				
L-3	"CV" Sta 27+50.00 TO "CV" Sta 31+50.00	27B				400				400			400		
	SUB TOTAL		136	129	5934	3050	544	288	1484	3050	1088	9	2690	1510	14
TOTAL			136 (*)	129(*)	9528 (*)			288 (*)	5622 (*)			9	2690	1510	14

(*) FOR GRAND TOTAL OF PAVEMENT MARKER, PAINT TRAFFIC STRIPE (2-COAT), REMOVE PAVEMENT MARKER AND REMOVE PAINTED TRAFFIC STRIPE, SEE PDQ-1

STATE OF CALIFORNIA - DEPARTMENT OF TRANSPORTATION
Caltrans DESIGN DIVISION

FUNCTIONAL SUPERVISOR: KAMRAN MAZHAR
CALCULATED-DESIGNED BY: DUNG PHAN
CHECKED BY: BEN IONESCU
REVISED BY
DATE REVISED

STAGE CONSTRUCTION QUANTITIES
SCQ-1

LAST REVISION 11-19-10
DATE PLOTTED => 30-MAY-2012
TIME PLOTTED => 12:58

Dist	COUNTY	ROUTE	POST MILES TOTAL PROJECT	SHEET No.	TOTAL SHEETS
12	Ora	405	5.0/5.6	28	92

REGISTERED CIVIL ENGINEER 05-10-12 DATE

5-29-12
PLANS APPROVAL DATE

REGISTERED PROFESSIONAL ENGINEER
BEN IONESCU
No. C65482
Exp. 09-30-13
CIVIL
STATE OF CALIFORNIA

THE STATE OF CALIFORNIA OR ITS OFFICERS OR AGENTS SHALL NOT BE RESPONSIBLE FOR THE ACCURACY OR COMPLETENESS OF SCANNED COPIES OF THIS PLAN SHEET.

NOTES:

1. LOCATIONS OF CONSTRUCTION AREA SIGNS (DETOUR) AND PCMS SHOWN ARE APPROXIMATE. EXACT LOCATIONS WILL BE DETERMINED BY THE ENGINEER.
2. EXACT MESSAGE TO BE DISPLAYED ON THE PCMS WILL BE DETERMINED BY THE ENGINEER

LEGEND:

- DIRECTION OF TRAVEL THROUGH DETOUR
- CONSTRUCTION AREA SIGN (DETOUR), 1-POST
- PCMS-1 — PORTABLE CHANGEABLE MESSAGE SIGN
- (X) — CONSTRUCTION AREA SIGN (DETOUR)
- CONNECTORS OR RAMPS CLOSURE

ABBREVIATIONS:

PCMS : PORTABLE CHANGABLE MESSAGE SIGN

PCMS No.	MESSAGE	
	1st FRAME	2nd FRAME
PCMS-1	CULVER CLOSED	USE JAMBOREE
PCMS-2	DETOUR CULVER DR	EXIT HERE

CONSTRUCTION AREA SIGNS (DETOUR)

SHEET No.	DETOUR SIGN TYPE	POST SIZE	No. OF POSTS	No. OF SIGNS	REMARKS
TH-1	(A)	4" x 6"	1	2	(S)
	(B)	4" x 6"	1	2	(S)

FOR ADDITIONAL QUANTITIES OF CONSTRUCTION AREA SIGNS, SEE SHEET CS-1.

(S) DENOTES STATIONARY MOUNTED SIGN.

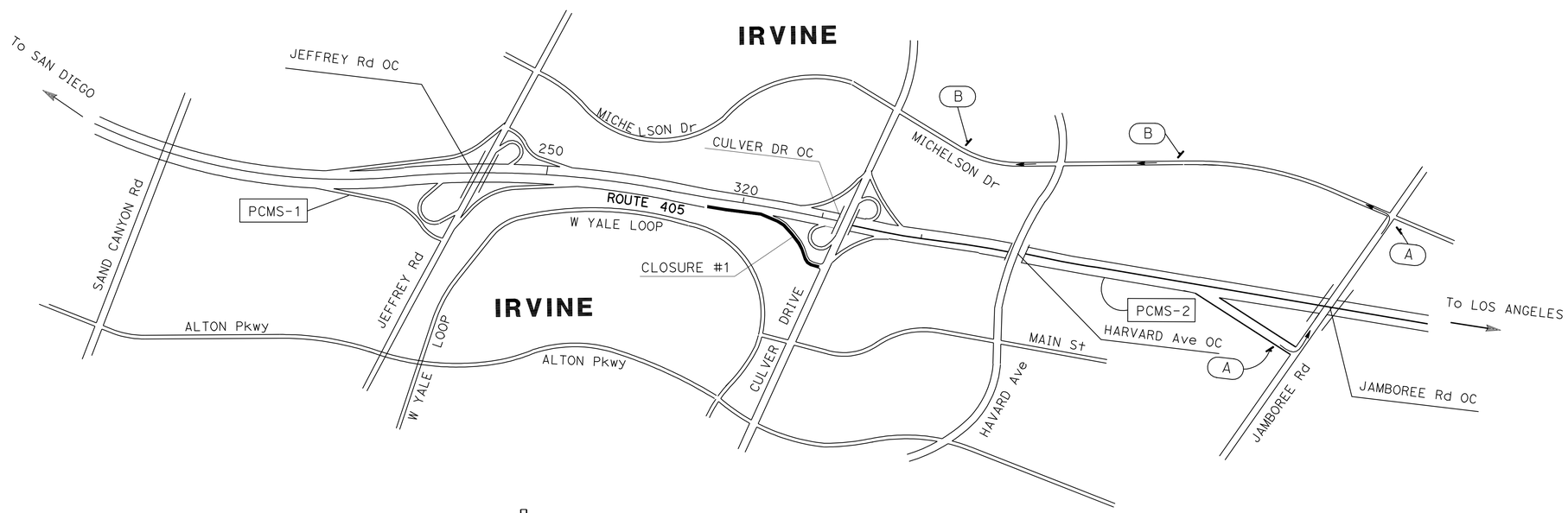

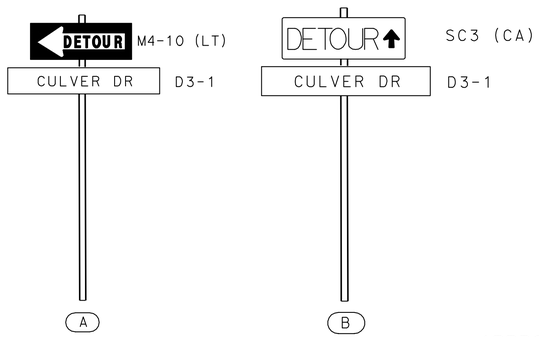

CLOSURE #1:

RAMP - CULVER DRIVE NB ROUTE 405 OFF-RAMP

DETOUR:

EXIT JAMBOREE Rd OFF RAMP, LEFT ON JAMBOREE Rd AND LEFT ON MICHELSON Dr.

TRAFFIC HANDLING PLAN
(DETOUR)

NO SCALE

TH-1

APPROVED FOR TRAFFIC HANDLING WORK ONLY

STATE OF CALIFORNIA - DEPARTMENT OF TRANSPORTATION
Caltrans® DESIGN DIVISION

FUNCTIONAL SUPERVISOR: KAMRAN MAZHAR
CALCULATED-DESIGNED BY: DUNG PHAN
CHECKED BY: BEN IONESCU
REVISED BY
DATE REVISED

LAST REVISION 11-23-10 DATE PLOTTED => 30-MAY-2012 TIME PLOTTED => 12:16

Dist	COUNTY	ROUTE	POST MILES TOTAL PROJECT	SHEET No.	TOTAL SHEETS
12	Ora	405	5.0/5.6	29	92

REGISTERED CIVIL ENGINEER 05-10-12 DATE

5-29-12
PLANS APPROVAL DATE

REGISTERED PROFESSIONAL ENGINEER BERNADETTE SURAWEERA No. C77207 Exp. 6-30-13 CIVIL STATE OF CALIFORNIA

THE STATE OF CALIFORNIA OR ITS OFFICERS OR AGENTS SHALL NOT BE RESPONSIBLE FOR THE ACCURACY OR COMPLETENESS OF SCANNED COPIES OF THIS PLAN SHEET.

NOTES:

1. FOR ACCURATE RIGHT OF WAY DATA, CONTACT RIGHT OF WAY ENGINEERING AT THE DISTRICT OFFICE.
2. ALL CONFLICTING TRAFFIC STRIPES, PAVEMENT MARKINGS AND PAVEMENT MARKERS SHALL BE REMOVED.
3. TRAFFIC STRIPE AND PAVEMENT MARKINGS SHALL BE THERMOPLASTIC, UNLESS OTHERWISE NOTED.
4. EXACT LOCATIONS FOR PAVEMNET MARKINGS TO BE DETERMINED BY THE ENGINEER.
6. ALL CROSS WALKS SHALL HAVE A 10′ INSIDE WIDTH.
7. ON THE EXIT RAMP, PLACE THE POINT OF TYPE III ARROW 20 ′ BEFORE THE CROSSWALK.
8. DIMENSIONS ALONG CURB AND GUTTER ARE GIVEN TO FACE OF CURB

ABBREVIATIONS:

S SIGNAL
A AHEAD

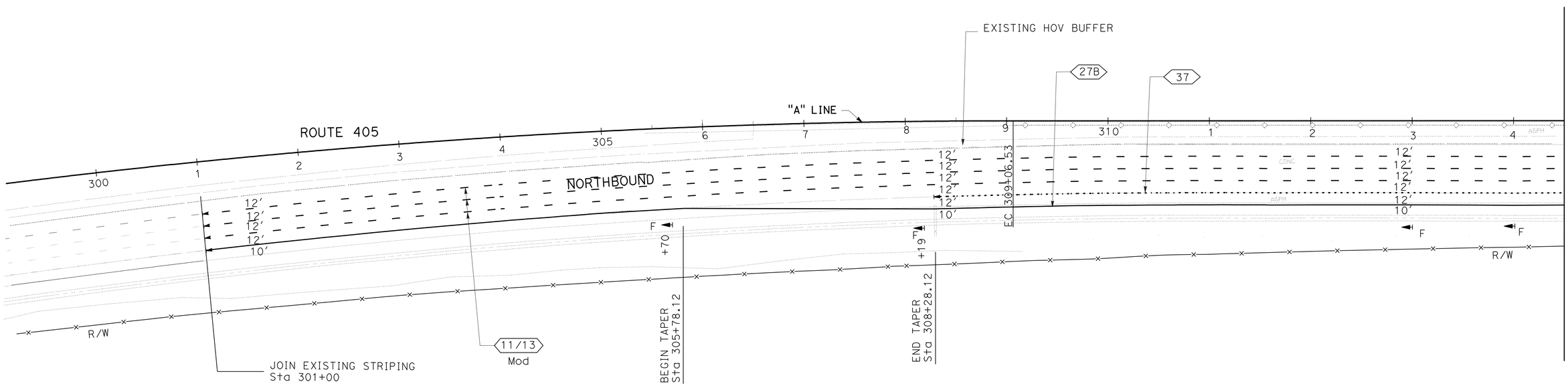

LEGEND:

- XX — PAVEMENT DELINEATION DETAIL
- CHANGE OF PAVEMENT DELINEATION DETAIL
- END OF PAVEMENT DELINEATION DETAIL
- TRAFFIC DIRECTION
- F — DELINEATOR CLASS-1 (TYPE "F")
- G — DELINEATOR CLASS-1 (TYPE "G")
- CW — 12" SOLID WHITE CROSS WALK
- TYPE G ONE-WAY CLEAR RETROREFLECTIVE MARKER
- TYPE A WHITE NON-REFLECTIVE MARKER
- TYPE C RED-CLEAR RETROREFLECTIVE MARKER
- 4" BLACK PAINT (2-COAT) TRAFFIC STRIPE
- 4" WHITE THERMOPLASTIC TRAFFIC STRIPE

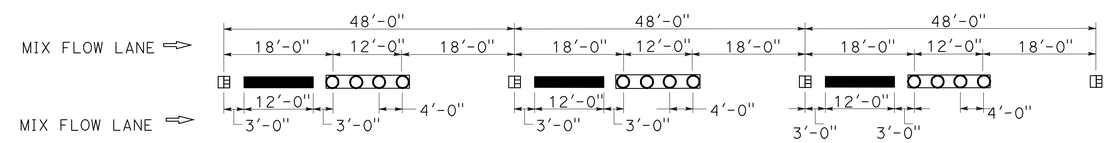

DETAIL 11/14 Mod

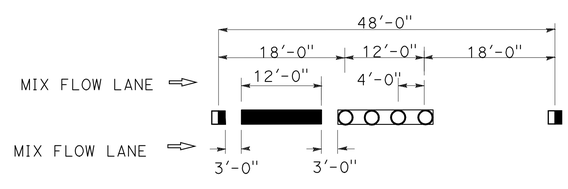

DETAIL 11/13 Mod

PAVEMENT DELINEATION

SCALE: 1" = 50′

PD-1

APPROVED FOR PAVEMENT DELINEATION WORK ONLY

STATE OF CALIFORNIA - DEPARTMENT OF TRANSPORTATION
DESIGN DIVISION
Caltrans

FUNCTIONAL SUPERVISOR: SON NGUYEN
CALCULATED-DESIGNED BY: B. SURAWEERA
CHECKED BY: B. HUA
REVISED BY
DATE REVISED

LAST REVISION 07-01-11
DATE PLOTTED => 30-MAY-2012
TIME PLOTTED => 12:16

Dist	COUNTY	ROUTE	POST MILES TOTAL PROJECT	SHEET No.	TOTAL SHEETS
12	Ora	405	5.0/5.6	30	92

REGISTERED CIVIL ENGINEER 05-10-12 DATE

5-29-12
PLANS APPROVAL DATE

REGISTERED PROFESSIONAL ENGINEER BERNADETTE SURAWEERA No. C77207 Exp. 6-30-13 CIVIL STATE OF CALIFORNIA

THE STATE OF CALIFORNIA OR ITS OFFICERS OR AGENTS SHALL NOT BE RESPONSIBLE FOR THE ACCURACY OR COMPLETENESS OF SCANNED COPIES OF THIS PLAN SHEET.

NOTE:

FOR ACCURATE RIGHT OF WAY DATA, CONTACT RIGHT OF WAY ENGINEERING AT THE DISTRICT OFFICE.

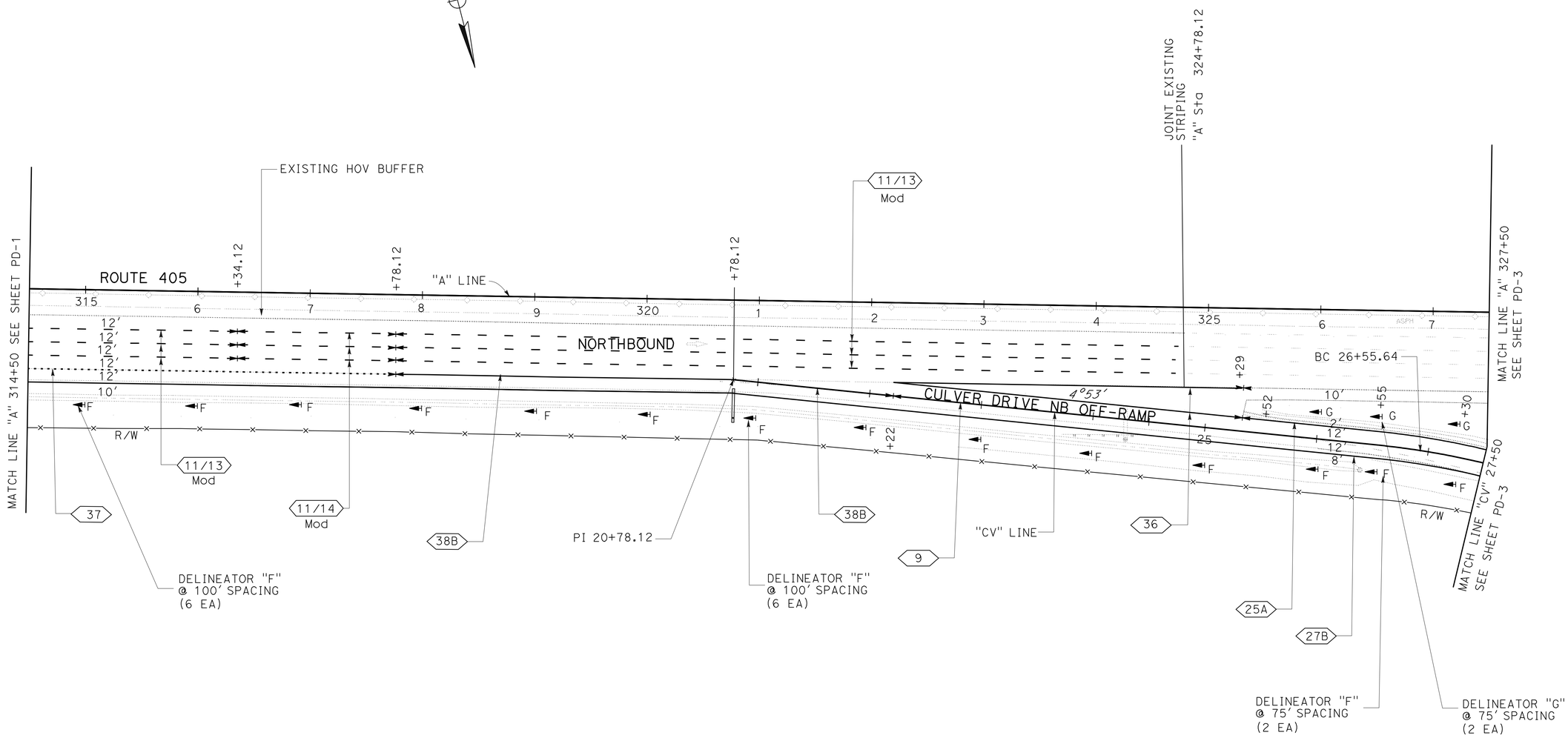

PAVEMENT DELINEATION

SCALE: 1" = 50'

PD-2

APPROVED FOR PAVEMENT DELINEATION WORK ONLY

STATE OF CALIFORNIA - DEPARTMENT OF TRANSPORTATION
Caltrans
DESIGN DIVISION

FUNCTIONAL SUPERVISOR: SON NGUYEN
CALCULATED-DESIGNED BY: B. SURAWEERA
CHECKED BY: B. HUA
REVISED BY
DATE REVISED

LAST REVISION 00-00-00
DATE PLOTTED => 30-MAY-2012
TIME PLOTTED => 12:16

Dist	COUNTY	ROUTE	POST MILES TOTAL PROJECT	SHEET No.	TOTAL SHEETS
12	Ora	405	5.0/5.6	31	92

REGISTERED CIVIL ENGINEER 05-10-12 DATE

5-29-12
PLANS APPROVAL DATE

REGISTERED PROFESSIONAL ENGINEER BERNADETTE SURAWEERA No. C77207 Exp. 6-30-13 CIVIL STATE OF CALIFORNIA

THE STATE OF CALIFORNIA OR ITS OFFICERS OR AGENTS SHALL NOT BE RESPONSIBLE FOR THE ACCURACY OR COMPLETENESS OF SCANNED COPIES OF THIS PLAN SHEET.

NOTE:

FOR ACCURATE RIGHT OF WAY DATA, CONTACT RIGHT OF WAY ENGINEERING AT THE DISTRICT OFFICE.

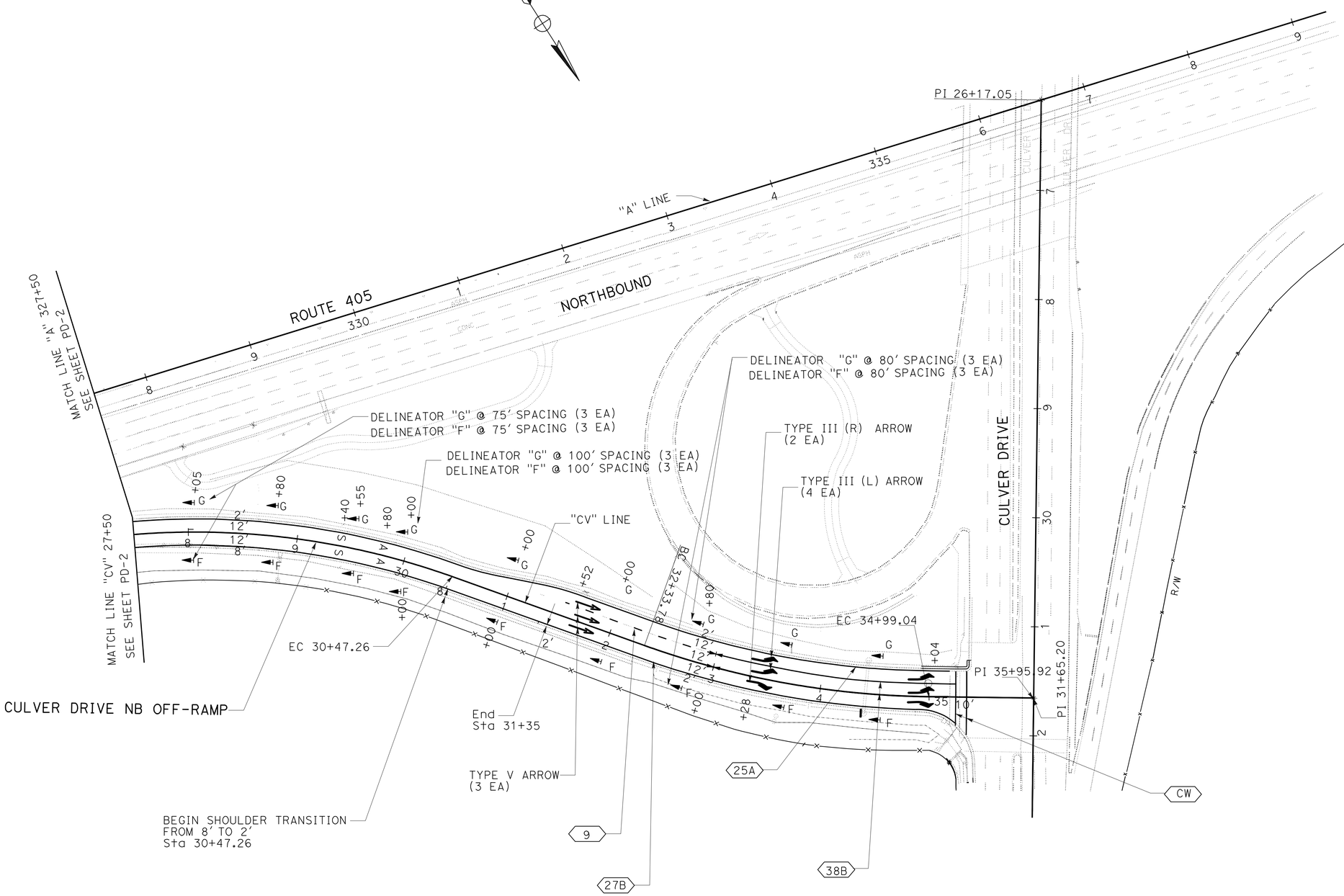

PAVEMENT DELINEATION

SCALE: 1" = 50'

PD-3

APPROVED FOR PAVEMENT DELINEATION WORK ONLY

STATE OF CALIFORNIA - DEPARTMENT OF TRANSPORTATION
Caltrans® DESIGN DIVISION

FUNCTIONAL SUPERVISOR: SON NGUYEN
CALCULATED-DESIGNED BY: B. SURAWEERA
CHECKED BY: B. HUA
REVISED BY
DATE REVISED

LAST REVISION 07-10-11
DATE PLOTTED => 30-MAY-2012
TIME PLOTTED => 12:16

Dist	COUNTY	ROUTE	POST MILES TOTAL PROJECT	SHEET No.	TOTAL SHEETS
12	Ora	405	5.0/5.6	32	92

REGISTERED CIVIL ENGINEER 05-10-12 DATE

5-29-12
PLANS APPROVAL DATE

REGISTERED PROFESSIONAL ENGINEER BERNADETTE SURAWEERA No. C 77207 Exp. 6-30-13 CIVIL STATE OF CALIFORNIA

THE STATE OF CALIFORNIA OR ITS OFFICERS OR AGENTS SHALL NOT BE RESPONSIBLE FOR THE ACCURACY OR COMPLETENESS OF SCANNED COPIES OF THIS PLAN SHEET.

PAVEMENT DELINEATION QUANTITIES

SHEET No.	STATIONS	THERMOPLASTIC TRAFFIC STRIPE 4" DETAIL 27B SOLID WHITE	THERMOPLASTIC TRAFFIC STRIPE 4" DETAIL 25A SOLID WHITE	THERMOPLASTIC TRAFFIC STRIPE 4" DETAIL 9 BROKEN (17-7) WHITE	THERMOPLASTIC TRAFFIC STRIPE 4" DETAIL 11/13 Mod BROKEN (36-12) WHITE	THERMOPLASTIC TRAFFIC STRIPE 4" DETAIL 11/14 Mod BROKEN (36-12) WHITE	THERMOPLASTIC TRAFFIC STRIPE 8" DETAIL 36 SOLID WHITE	THERMOPLASTIC TRAFFIC STRIPE 8" DETAIL 38B SOLID WHITE	THERMOPLASTIC TRAFFIC STRIPE 8" DETAIL 37 BROKEN (12-3) WHITE	PAINT TRAFFIC STRIPE (2-COAT) DETAIL 11/13 Mod BROKEN (36-12) BLACK	PAINT TRAFFIC STRIPE (2-COAT) DETAIL 11/14 Mod BROKEN (36-12) BLACK	PAINT TRAFFIC STRIPE (2-COAT) 4" BROKEN WHITE 4" SOLID WHITE 8" SOLID WHITE	THERMOPLASTIC PAVEMENT MARKING CROSSWALK WHITE	THERMOPLASTIC PAVEMENT MARKING ARROW/WORDS WHITE	PAVEMENT MARKER RETROREFLECTIVE TYPE H	PAVEMENT MARKER RETROREFLECTIVE TYPE C	PAVEMENT MARKER RETROREFLECTIVE TYPE G	PAVEMENT MARKER NON-REFLECTIVE TYPE A	DELINEATOR (CLASS 1) TYPE F	DELINEATOR (CLASS 1) TYPE G	REMOVE YELLOW THERMOPLASTIC TRAFFIC STRIPE (HAZARDOUS WASTE)	REMOVE THERMOPLASTIC TRAFFIC STRIPE (WHITE)	REMOVE PAINTED TRAFFIC STRIPE BLACK & WHITE	REMOVE THERMOPLASTIC PAVEMENT MARKING	REMOVE PAVEMENT MARKER	REMOVE DELINEATOR
		LF	LF	LF	LF	LF	LF	LF	LF	LF	LF	LF	SQFT	SQFT	EA	EA	EA	EA	EA	EA	LF	LF	LF	SQFT	EA	EA
PD-1	Rte 405 NB "A" 301+00 TO 314+50	1350			4050				622	4050							146	372	4			2394	1044		426	4
PD-2	Rte 405 NB "A" 314+50 TO 327+50	630			2655	432	307	300	330	2655	432					20	120	264	6			2036	792		350	6
	NB OFF-RAMP (CULVER) "CV" 20+78.12 TO 27+50	672	221	528			307	144							12		40		8	3	221	1286			25	11
PD-3	NB OFF-RAMP (CULVER) "CV" 27+50 TO 35+95.92	775	775	925				450					123	477	34		67		9	9	775	1969		341	79	18
SUBTOTAL		3427	996	1453	6705	432	614	894	952	6705	432		123	477	46	20	373	636	27	12	996	7685	1836	341	880	39
TOTAL		4423		1453	7137		1508		952	7137			600		439			636	39		996	7685	1836	341	880	39
SHEET SCQ-1 TOTAL PAVEMENT MARKER & TRAFFIC STRIPE												9528			129			136					5622		288	
GRAND TOTAL		4423		1453	7137		1508		952	16665			600		568			772	39		996	7685	7458	341	1168	39

PAVEMENT DELINEATION QUANTITIES

PDQ-1

STATE OF CALIFORNIA - DEPARTMENT OF TRANSPORTATION
Caltrans® DESIGN DIVISION

FUNCTIONAL SUPERVISOR: SON NGUYEN
CALCULATED-DESIGNED BY: B. SURAWEERA
CHECKED BY: B. HUA
REVISED BY
DATE REVISED

LAST REVISION 00-00-00
DATE PLOTTED => 30-MAY-2012
TIME PLOTTED => 12:16

Dist	COUNTY	ROUTE	POST MILES TOTAL PROJECT	SHEET No.	TOTAL SHEETS
12	Ora	405	5.0/5.6	33	92

Bang Q. Hua 05-10-12
REGISTERED CIVIL ENGINEER DATE

5-29-12
PLANS APPROVAL DATE

REGISTERED PROFESSIONAL ENGINEER
BANG Q HUA
No. C71273
Exp. 12/31/11
CIVIL
STATE OF CALIFORNIA

THE STATE OF CALIFORNIA OR ITS OFFICERS OR AGENTS SHALL NOT BE RESPONSIBLE FOR THE ACCURACY OR COMPLETENESS OF SCANNED COPIES OF THIS PLAN SHEET.

NOTE:

FOR ACCURATE RIGHT OF WAY DATA, CONTACT RIGHT OF WAY ENGINEERING AT THE DISTRICT OFFICE.

NOTES:

1. EXACT LOCATIONS OF ROADSIDE SIGNS WILL BE DETERMINED BY THE ENGINEER.
2. PROTECT ALL SIGNS IN PLACE UNLESS OTHERWISE NOTED.

ABBREVIATIONS:

ISS INSTALL SIGN STRUCTURE
RSS REMOVE SIGN STRUCTURE
RS REMOVE ROADSIDE SIGN
RSB REMOVE ROADSIDE SIGN (STRAP AND SADDLE BRACKET METHOD)
IS ROADSIDE SIGN - ONE POST
ISB INSTALL SIGN (STRAP AND SADDLE BRACKET METHOD)
RL RELOCATE ROADSIDE SIGN
(CA) CALIFORNIA SIGN CODE

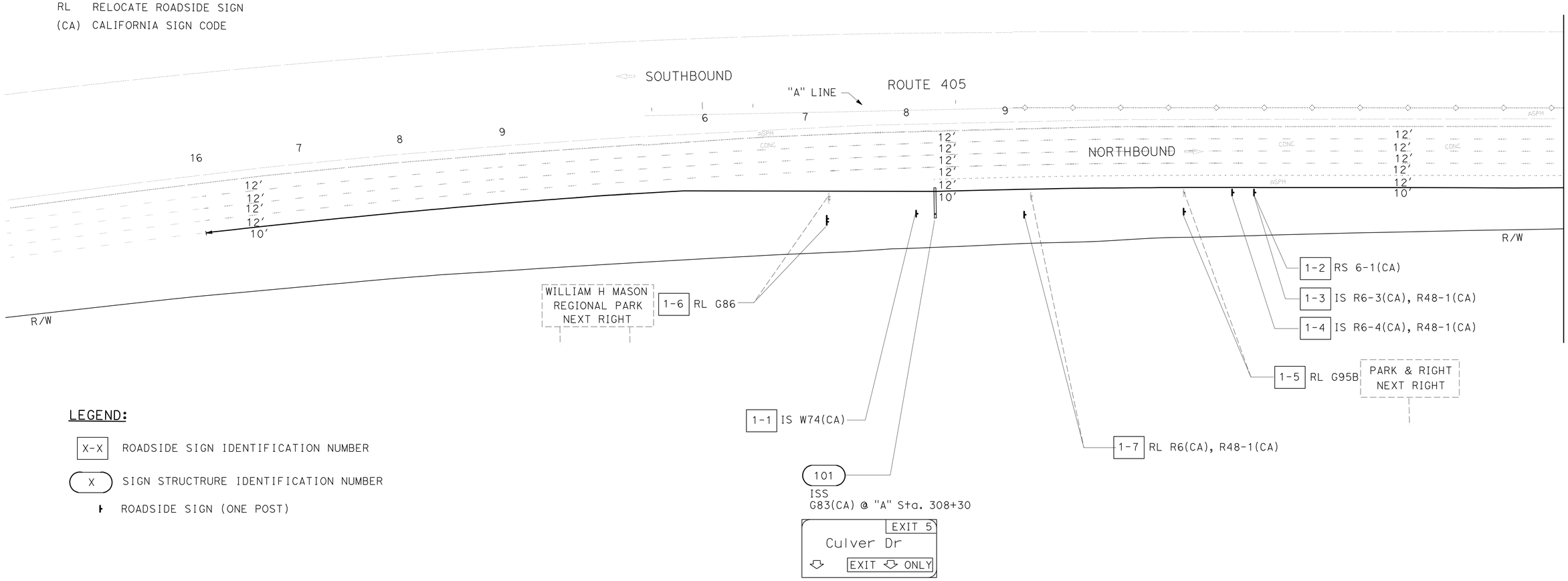

LEGEND:

X-X ROADSIDE SIGN IDENTIFICATION NUMBER
X SIGN STRUCTRURE IDENTIFICATION NUMBER
ROADSIDE SIGN (ONE POST)

SIGN PLAN

SCALE: 1" = 50′

S-1

APPROVED FOR SIGN WORK ONLY

REVISED BY | DATE REVISED
RICHARD DANG | BANG HUA
CALCULATED- DESIGNED BY | CHECKED BY
FUNCTIONAL SUPERVISOR: SON NGUYEN
STATE OF CALIFORNIA - DEPARTMENT OF TRANSPORTATION
Caltrans DESIGN

LAST REVISION 5-07-12 | DATE PLOTTED => 30-MAY-2012 | TIME PLOTTED => 12:16

Dist	COUNTY	ROUTE	POST MILES TOTAL PROJECT	SHEET No.	TOTAL SHEETS
12	Ora	405	5.0/5.6	34	92

Bang Q. Hua 05-10-12
REGISTERED CIVIL ENGINEER DATE

5-29-12
PLANS APPROVAL DATE

REGISTERED PROFESSIONAL ENGINEER
BANG Q HUA
No. C71273
Exp. 12/31/13
CIVIL
STATE OF CALIFORNIA

THE STATE OF CALIFORNIA OR ITS OFFICERS OR AGENTS SHALL NOT BE RESPONSIBLE FOR THE ACCURACY OR COMPLETENESS OF SCANNED COPIES OF THIS PLAN SHEET.

NOTE:

FOR ACCURATE RIGHT OF WAY DATA, CONTACT RIGHT OF WAY ENGINEERING AT THE DISTRICT OFFICE.

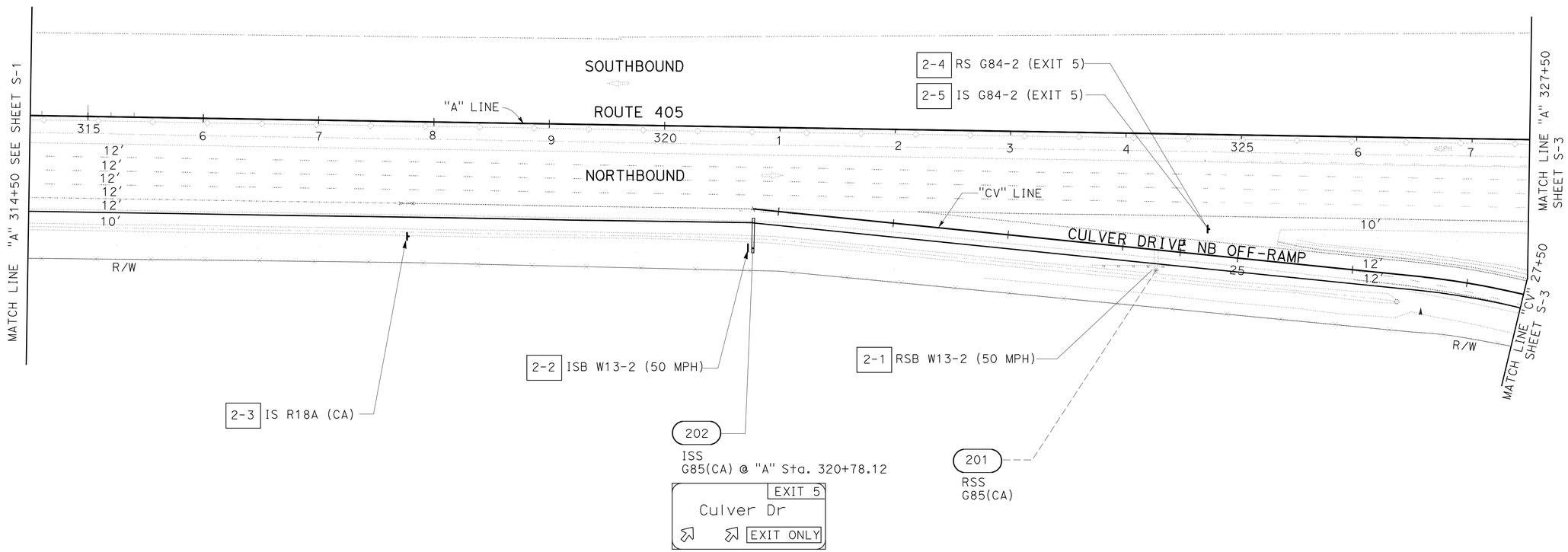

SIGN PLAN

SCALE: 1" = 50'

S-2

APPROVED FOR SIGN WORK ONLY

STATE OF CALIFORNIA - DEPARTMENT OF TRANSPORTATION
Caltrans® DESIGN

FUNCTIONAL SUPERVISOR: SON NGUYEN
CALCULATED-DESIGNED BY: RICHARD DANG
CHECKED BY: BANG HUA
REVISED BY
DATE REVISED

LAST REVISION 05-07-11
DATE PLOTTED => 30-MAY-2012
TIME PLOTTED => 12:16

Dist	COUNTY	ROUTE	POST MILES TOTAL PROJECT	SHEET No.	TOTAL SHEETS
12	Ora	405	5.0/5.6	35	92

Bang Q. Hua 05-10-12
REGISTERED CIVIL ENGINEER DATE

5-29-12
PLANS APPROVAL DATE

REGISTERED PROFESSIONAL ENGINEER
BANG Q HUA
No. C71723
Exp. 12-31-13
CIVIL
STATE OF CALIFORNIA

THE STATE OF CALIFORNIA OR ITS OFFICERS OR AGENTS SHALL NOT BE RESPONSIBLE FOR THE ACCURACY OR COMPLETENESS OF SCANNED COPIES OF THIS PLAN SHEET.

NOTE:
NOTE: ACCURATE RIGHT OF WAY DATA, CONTACT RIGHT OF WAY ENGINEERING AT THE DISTRICT OFFICE.
FOR ACCURATE RIGHT OF WAY DATA, CONTACT RIGHT OF WAY ENGINEERING AT THE DISTRICT OFFICE.

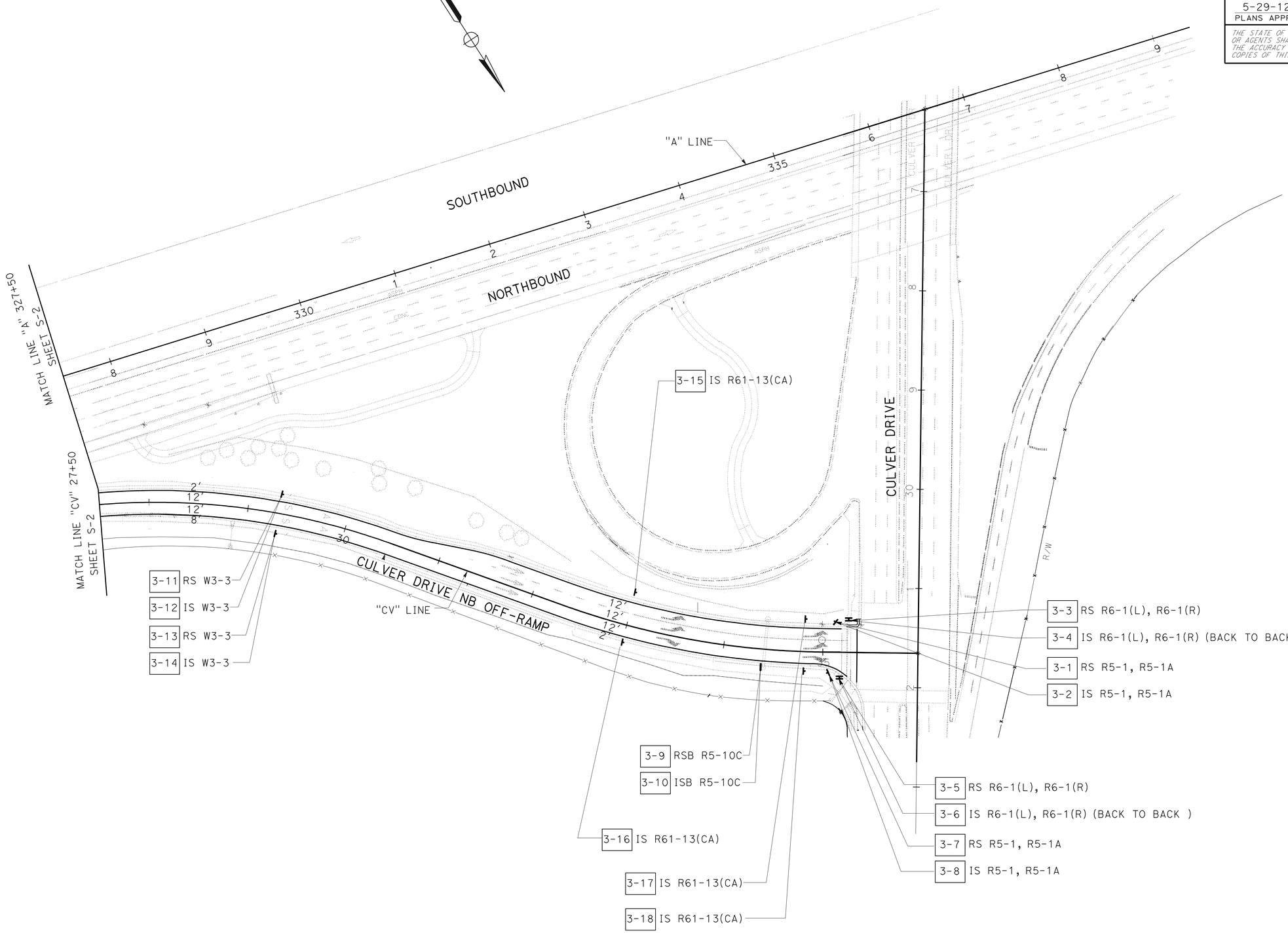

APPROVED FOR SIGN WORK ONLY

SIGN PLAN

SCALE: 1" = 50'

S-3

STATE OF CALIFORNIA - DEPARTMENT OF TRANSPORTATION
Caltrans® DESIGN

FUNCTIONAL SUPERVISOR: SON NGUYEN
CALCULATED-DESIGNED BY: RICHARD DANG
CHECKED BY: BANG HUA
REVISED BY
DATE REVISED

LAST REVISION 05-07-12
DATE PLOTTED => 30-MAY-2012
TIME PLOTTED => 12:16

Dist	COUNTY	ROUTE	POST MILES TOTAL PROJECT	SHEET No.	TOTAL SHEETS
12	Ora	405	5.0/5.6	36	92

Bang Q. Hua 05-10-12
REGISTERED CIVIL ENGINEER DATE

5-29-12
PLANS APPROVAL DATE

REGISTERED PROFESSIONAL ENGINEER
BANG Q. HUA
No. C71273
EXP. 12-31-13
CIVIL
STATE OF CALIFORNIA

THE STATE OF CALIFORNIA OR ITS OFFICERS OR AGENTS SHALL NOT BE RESPONSIBLE FOR THE ACCURACY OR COMPLETENESS OF SCANNED COPIES OF THIS PLAN SHEET.

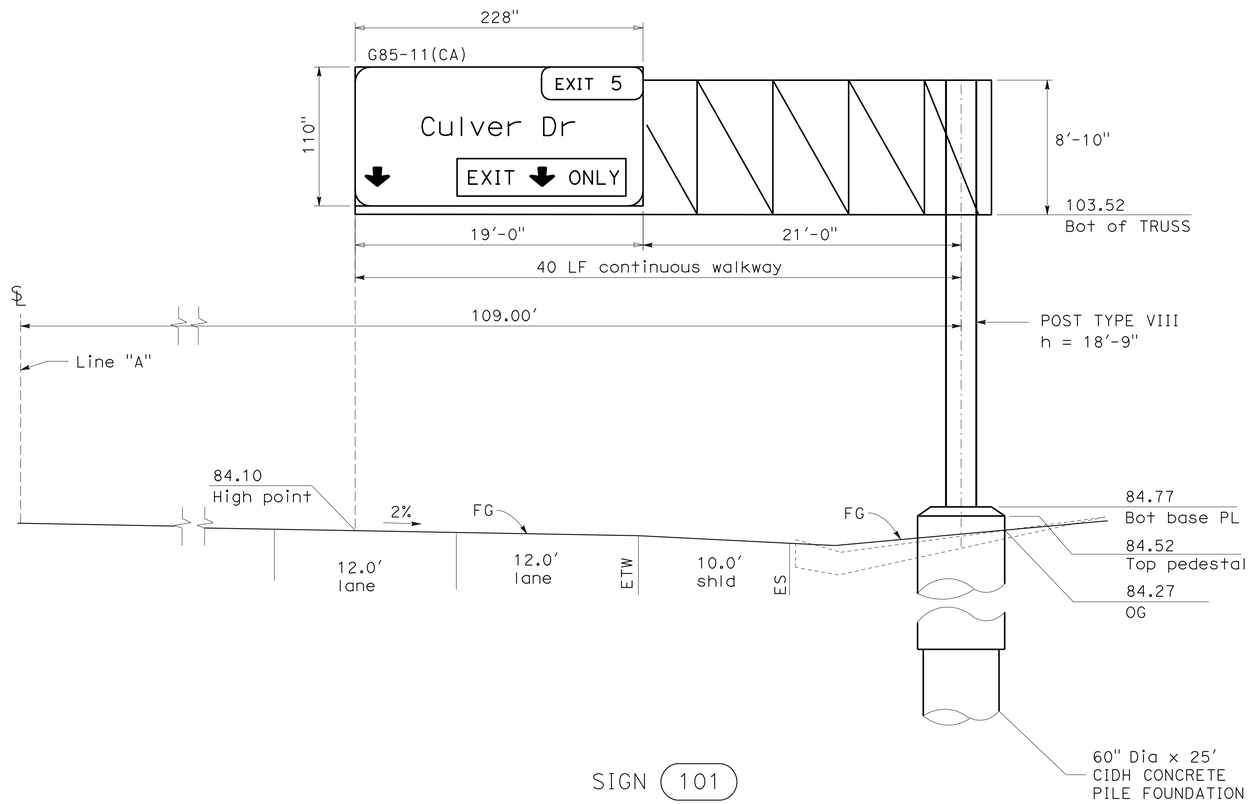

SIGN 101

FNBT Rte 405 "A" Sta 308+30

SIGN TYPE: TRUSS
SIGN PANEL: LAMINATED TYPE A
ILLUMINATION REQUIRED

NOTES:

1. INSTALL LAMINATED SIGN PANEL TYPE A.
2. MAINTAIN MINIMUM 18'-6" VERTICAL CLEARANCE BETWEEN THE BOTTOM OF THE TRUSS FRAME AND THE HIGH POINT OF ROADWAY SURFACE BELOW.
3. CONTRACTOR TO VERIFY ALL ELEVATIONS AND SIGN PANEL DIMENSIONS PRIOR TO FABRICATING ANY MATERIAL.
4. ILLUMINATION REQUIRED.

SIGN DETAILS

NO SCALE

SD-1

STATE OF CALIFORNIA - DEPARTMENT OF TRANSPORTATION
Caltrans

FUNCTIONAL SUPERVISOR: SON NGUYEN
CALCULATED-DESIGNED BY: BANG HUA
CHECKED BY: BANG HUA
REVISED BY
DATE REVISED

LAST REVISION 05-07-12
DATE PLOTTED => 30-MAY-2012
TIME PLOTTED => 12:16

Dist	COUNTY	ROUTE	POST MILES TOTAL PROJECT	SHEET No.	TOTAL SHEETS
12	Ora	405	5.0/5.6	37	92

Bang Q. Hua 05-10-12
REGISTERED CIVIL ENGINEER DATE

5-29-12
PLANS APPROVAL DATE

REGISTERED PROFESSIONAL ENGINEER
BANG Q. HUA
No. C71273
Exp. 12-31-13
CIVIL
STATE OF CALIFORNIA

THE STATE OF CALIFORNIA OR ITS OFFICERS OR AGENTS SHALL NOT BE RESPONSIBLE FOR THE ACCURACY OR COMPLETENESS OF SCANNED COPIES OF THIS PLAN SHEET.

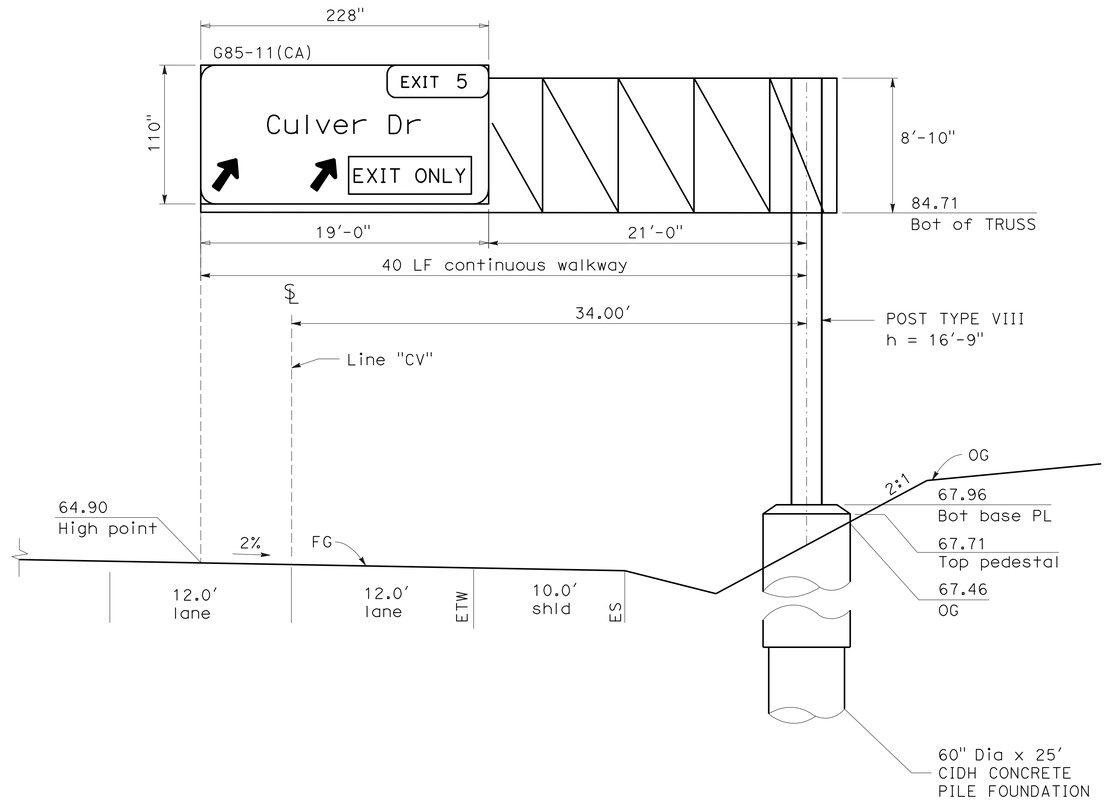

SIGN 202

FNBT Rte-405 "A" Sta 320+78.12

SIGN TYPE: TRUSS
SIGN PANEL: LAMINATED TYPE A
ILLUMINATION REQUIRED

NOTES:

1. INSTALL LAMINATED SIGN PANEL TYPE A.
2. MAINTAIN MINIMUM 18'-6" VERTICAL CLEARANCE BETWEEN THE BOTTOM OF THE TRUSS FRAME AND THE HIGH POINT OF ROADWAY SURFACE BELOW.
3. CONTRACTOR TO VERIFY ALL ELEVATIONS AND SIGN PANEL DIMENSIONS PRIOR TO FABRICATING ANY MATERIAL.
4. ILLUMINATION REQUIRED.

SIGN DETAILS

NO SCALE

SD-2

REVISED BY	DATE REVISED
BANG HUA	BANG HUA

CALCULATED-DESIGNED BY: BANG HUA
CHECKED BY: BANG HUA

FUNCTIONAL SUPERVISOR: SON NGUYEN

STATE OF CALIFORNIA - DEPARTMENT OF TRANSPORTATION
Caltrans

LAST REVISION 05-07-12 | DATE PLOTTED => 30-MAY-2012 | TIME PLOTTED => 12:16

Dist	COUNTY	ROUTE	POST MILES TOTAL PROJECT	SHEET No.	TOTAL SHEETS
12	Ora	405	5.0/5.6	38	92

Bang Q. Hua 05-10-12
REGISTERED CIVIL ENGINEER DATE

5-29-12
PLANS APPROVAL DATE

REGISTERED PROFESSIONAL ENGINEER
BANG Q. HUA
No. C 71273
Exp. 12/31/13
CIVIL
STATE OF CALIFORNIA

THE STATE OF CALIFORNIA OR ITS OFFICERS OR AGENTS SHALL NOT BE RESPONSIBLE FOR THE ACCURACY OR COMPLETENESS OF SCANNED COPIES OF THIS PLAN SHEET.

[EXIT 5] E;
6.0" Radius, 2.0" Border, White on Green;

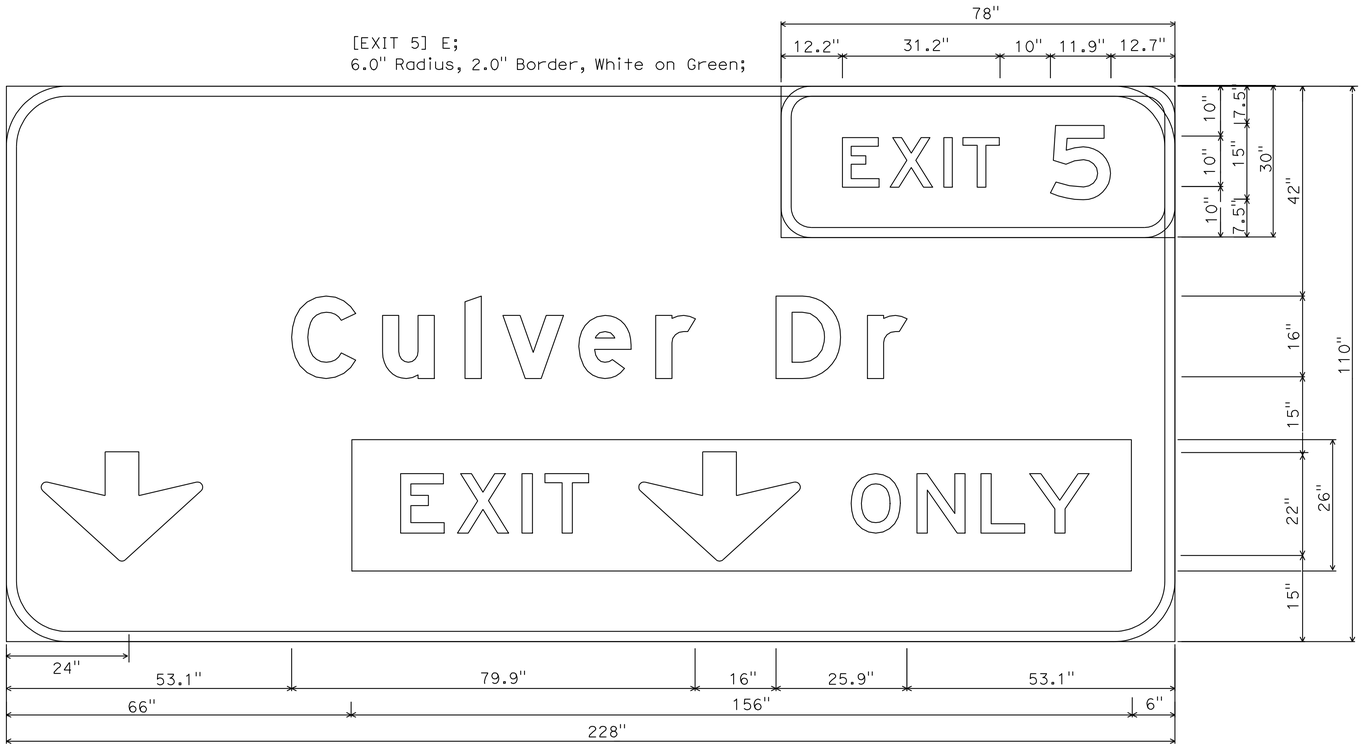

12.0" Radius, 2.0" Border, White on Green;
[Culver Dr] E Mod
32.0" VERT DOWN ARROW, W61D (CA)

SIGN 101

FNBT Rte-405 "A" Sta 308+30

A	B	C	D	E	R
32"	16"	6-1/2"	3"	22"	1"

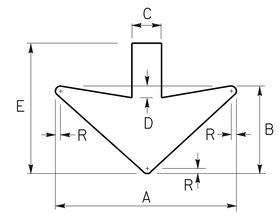

32.0" VERTICAL DOWN ARROW DETAIL

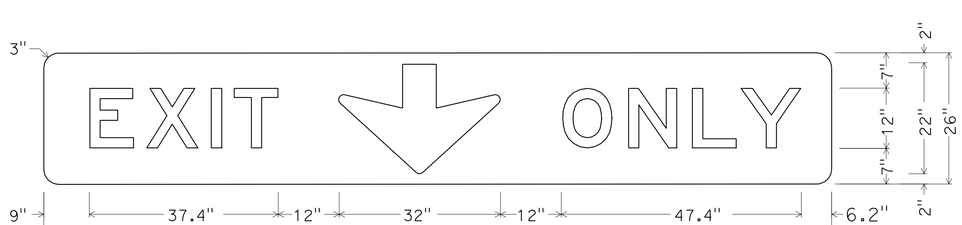

No border, Black on Yellow;
[EXIT ONLY] E;

W61D(CA) DETAIL

SIGN DETAILS

NO SCALE

SD-3

REVISED BY | DATE REVISED
RICHARD DANG | BANG HUA
CALCULATED-DESIGNED BY | CHECKED BY
FUNCTIONAL SUPERVISOR: SON NGUYEN

STATE OF CALIFORNIA - DEPARTMENT OF TRANSPORTATION
Caltrans

LAST REVISION 05-07-12 | DATE PLOTTED => 30-MAY-2012 | TIME PLOTTED => 12:16

Dist	COUNTY	ROUTE	POST MILES TOTAL PROJECT	SHEET No.	TOTAL SHEETS
12	Ora	405	5.0/5.6	39	92

Bang Q. Hua 05-10-12
REGISTERED CIVIL ENGINEER DATE

5-29-12
PLANS APPROVAL DATE

REGISTERED PROFESSIONAL ENGINEER
BANG Q. HUA
No. C 71273
Exp. 12/31/13
CIVIL
STATE OF CALIFORNIA

THE STATE OF CALIFORNIA OR ITS OFFICERS OR AGENTS SHALL NOT BE RESPONSIBLE FOR THE ACCURACY OR COMPLETENESS OF SCANNED COPIES OF THIS PLAN SHEET.

[EXIT 5] E;
6.0" Radius, 2.0" Border, White on Green;

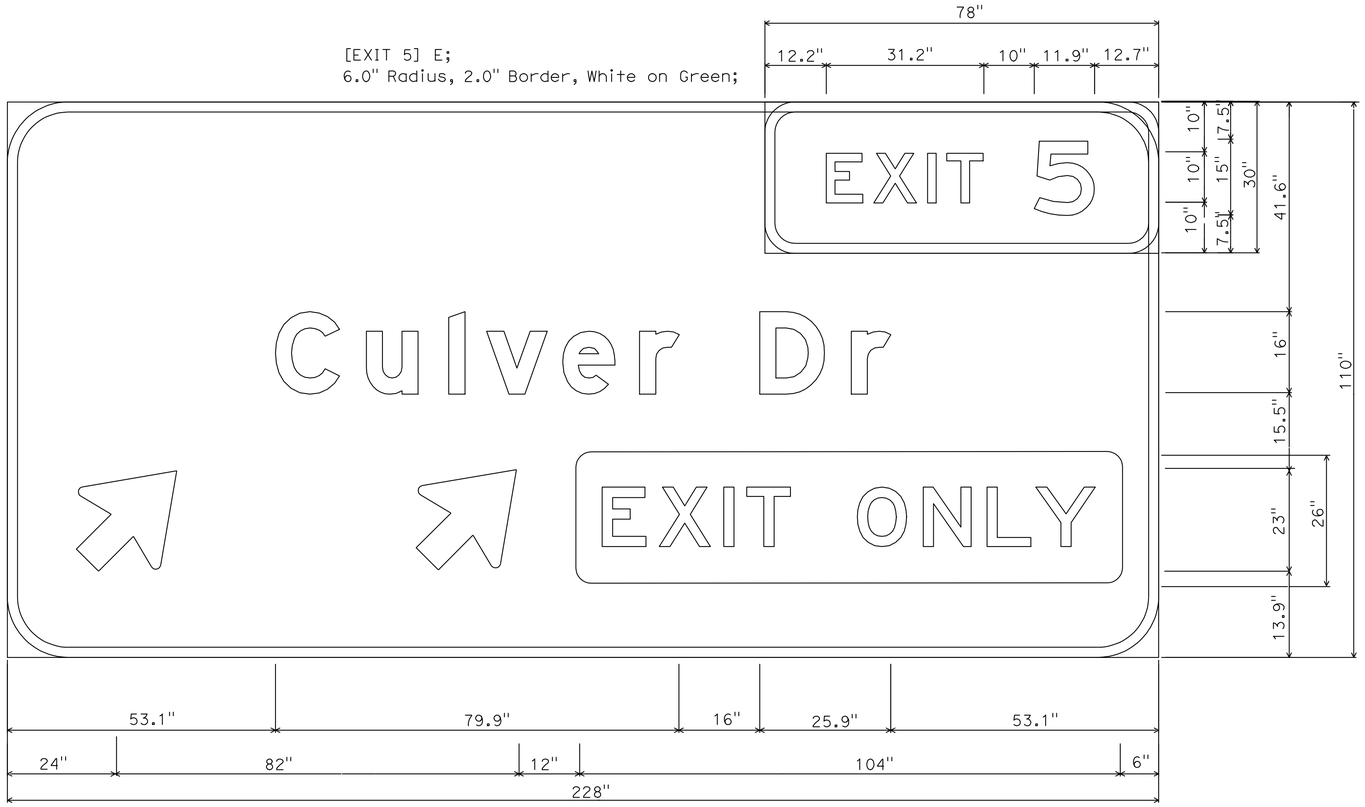

12.0" Radius, 2.0" Border, White on Green; [Culver Dr] E Mod
30" ARROW 45; 30" ARROW 45°; W61A(CA)

SIGN 202

FNBT Rte-405 "A" Sta 320+78.12

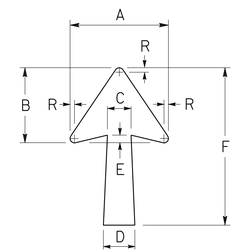

A	B	C	D	E	F	R
18-1/4"	14"	4-1/2"	6"	1-1/2"	30"	7/8"

10CAP-2LV 30" ARROW DETAIL

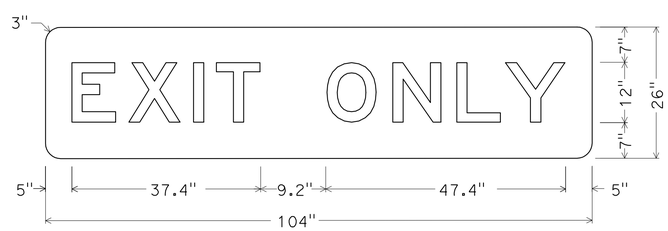

No border, Black on Yellow;
[EXIT] E; [ONLY] E

W61C(CA) DETAIL

SIGN DETAILS

NO SCALE

SD-4

REVISED BY	DATE REVISED

CALCULATED-DESIGNED BY	CHECKED BY
RICHARD DANG	BANG HUA

FUNCTIONAL SUPERVISOR: SON NGUYEN

STATE OF CALIFORNIA - DEPARTMENT OF TRANSPORTATION
Caltrans

LAST REVISION 05-07-12
DATE PLOTTED => 30-MAY-2012
TIME PLOTTED => 12:16

Dist	COUNTY	ROUTE	POST MILES TOTAL PROJECT	SHEET No.	TOTAL SHEETS
12	Ora	405	5.0/5.6	40	92

Bang Q. Hua 05-10-12
REGISTERED CIVIL ENGINEER DATE

5-29-12
PLANS APPROVAL DATE

REGISTERED PROFESSIONAL ENGINEER
BANG Q. HUA
No. C 71273
Exp. 12/31/13
CIVIL
STATE OF CALIFORNIA

THE STATE OF CALIFORNIA OR ITS OFFICERS OR AGENTS SHALL NOT BE RESPONSIBLE FOR THE ACCURACY OR COMPLETENESS OF SCANNED COPIES OF THIS PLAN SHEET.

OVERHEAD SIGN QUANTITIES

SHEET No.	SIGN No.	LOCATION	FURNISH SIGN STRUCTURE (TRUSS)	INSTALL SIGN STRUCTURE (TRUSS)	60" CIDH CONCRETE PILE (SIGN FOUNDATION)	REMOVE SIGN STRUCTURE
			LBS	LBS	LF	EA
S-1	101	FNBT @ Sta 308+30 "A" LINE	22130	22130	25	
S-2	201	FNBT @ Sta 24+30 "CV" LINE				1
	202	FNBT @ Sta 320+78.12 "A" LINE	21640	21640	25	
TOTAL			43770	43770	50	1

MATERIAL SUMMARY (CONTRACTOR FURNISHED OVERHEAD SIGNS)

SHEET No.	SIGN No.	SIGN CODE	PANEL SIZE (inch x inch)	SIGN AREA (SQFT)	SINGLE FACED	PROTECTIVE OVERLAY	BACKGROUND		LEGEND		GRAFFITI FILM	OVERHEAD SIGN
							SHEETING COLOR	RETROREFLECTIVE ASTM TYPE	SHEETING COLOR	RETROREFLECTIVE ASTM TYPE	STANDARD	FURNISH LAMINATED PANEL SIGN (1" - TYPE A)
												SQFT
S-1	101	G83 (CA)	228 x 110	175	×	N/A	G	VIII	W	VIII	×	175
S-2	202	G85 (CA)	228 x 110	175	×	N/A	G	VIII	W	VIII	×	175
TOTAL												350

ABBREVIATIONS:

G = GREEN

W = WHITE

SIGN QUANTITIES

SQ-1

STATE OF CALIFORNIA - DEPARTMENT OF TRANSPORTATION
Caltrans® DESIGN DIVISION

FUNCTIONAL SUPERVISOR: SON NGUYEN
CALCULATED-DESIGNED BY: RICHARD DANG
CHECKED BY: BANG HUA
REVISED BY
DATE REVISED

LAST REVISION 15-07-12 | DATE PLOTTED => 30-MAY-2012 | TIME PLOTTED => 12:58

Dist	COUNTY	ROUTE	POST MILES TOTAL PROJECT	SHEET No.	TOTAL SHEETS
12	Ora	405	5.0/5.6	41	92

Bang Q. Hua 05-10-12
REGISTERED CIVIL ENGINEER DATE

5-29-12
PLANS APPROVAL DATE

REGISTERED PROFESSIONAL ENGINEER
BANG Q. HUA
No. C 71273
Exp. 12/31/13
CIVIL
STATE OF CALIFORNIA

THE STATE OF CALIFORNIA OR ITS OFFICERS OR AGENTS SHALL NOT BE RESPONSIBLE FOR THE ACCURACY OR COMPLETENESS OF SCANNED COPIES OF THIS PLAN SHEET.

ROADSIDE SIGNS QUANTITIES

SHEET No.	SIGN No.	CODE	PANEL SIZE (L x H)	POST SIZE & LENGTH (N)	REMOVE ROADSIDE SIGN	ROADSIDE SIGN (ONE POST)	REMOVE ROADSIDE SIGN (STRAP & SADDLE BRACKET METHOD)	INSTALL SIGN (STRAP & SADDLE BRACKET METHOD)	RELOCATE ROADSIDE SIGN	REMARK
				6 x 6						
			IN x IN	F+	EA	EA	EA	EA	EA	
S-1	1-1	W74(CA)	60" x 60"	16		1				
	1-2	R6-1(CA)	EXISTING		1					
	1-3	R6-3(CA)	48" x 60"	16		1				
		R48-1(CA)	36" x 18"							
	1-4	R6-4(CA)	48" x 60"	16		1				
		R48-1(CA)	36" x 18"							
	1-5	G95B(CA)	EXISTING						1	
	1-6	G86(CA)	EXISTING						1	
	1-7	R6(CA), R48-1(CA)	EXISTING						1	
S-2	2-1	W13-2	EXISTING				1			
	2-2	W13-2	36" x 48"					1		50 MPH
	2-3	R18A(CA)	66" x 48"	16		1				
	2-4	G84-2(CA)	EXISTING		1					
	2-5	G84-2(CA)	54" x 48"	16		1				EXIT 5
S-3	3-1	R5-1	EXISTING		1					
		R5-1A	EXISTING							
	3-2	R5-1	48" x 48"	13		1				
		R5-1A	42" x 30"							
	3-3	R6-1(L)	EXISTING		1					
		R6-1(R)	EXISTING							
	3-4	R6-1(L)	36" x 12"	6		1				
		R6-1(R)	36" x 12"							
	3-5	R6-1(L)	EXISTING		1					
		R6-1(R)	EXISTING							
	3-6	R6-1(L)	36" x 12"	6		1				
		R6-1(R)	36" x 12"							
	3-7	R5-1	EXISTING		1					
		R5-1A	EXISTING							
	3-8	R5-1	48" x 48"	13		1				
		R5-1A	42" x 30"							
	3-9	R5-10C	EXISTING				1			
	3-10	R5-10C	24" x 12"					1		
	3-11	W3-3	EXISTING		1					
	3-12	W3-3	48" x 48"	16		1				
	3-13	W3-3	EXISTING		1					
	3-14	W3-3	48" x 48"	16		1				
	3-15	R61-13(CA)	48" x 30"	12.5		1				
	3-16	R61-13(CA)	48" x 30"	12.5		1				
	3-17	R61-13(CA)	48" x 30"	12.5		1				
	3-18	R61-13(CA)	48" x 30"	12.5		1				
		TOTAL			8	15	2	2	3	

(N): NOT A SEPARATE PAY ITEM, FOR INFORMATION ONLY

SIGN QUANTITIES

SQ-2

REVISED BY | DATE REVISED
RICHARD DANG | BANG HUA
CALCULATED-DESIGNED BY | CHECKED BY
FUNCTIONAL SUPERVISOR: SON NGUYEN
STATE OF CALIFORNIA - DEPARTMENT OF TRANSPORTATION
Caltrans® DESIGN DIVISION

LAST REVISION 05-07-12 | DATE PLOTTED => 30-MAY-2012 | TIME PLOTTED => 12:58

Dist	COUNTY	ROUTE	POST MILES TOTAL PROJECT	SHEET No.	TOTAL SHEETS
12	Ora	405	5.0/5.6	42	92

Bang Q. Hua 05-10-12
REGISTERED CIVIL ENGINEER DATE

5-29-12
PLANS APPROVAL DATE

REGISTERED PROFESSIONAL ENGINEER
BANG Q. HUA
No. C 71273
Exp. 12/31/13
CIVIL
STATE OF CALIFORNIA

THE STATE OF CALIFORNIA OR ITS OFFICERS OR AGENTS SHALL NOT BE RESPONSIBLE FOR THE ACCURACY OR COMPLETENESS OF SCANNED COPIES OF THIS PLAN SHEET.

MATERIAL SUMMARY (CONTRACTOR FURNISHED SIGNS)

SHEET No.	SIGN No.	SIGN CODE	PANEL SIZE (inch x inch)	SIGN AREA (SQFT)	SINGLE FACED	PROTECTIVE OVERLAY	BACKGROUND		LEGEND		ROADSIDE SIGN — FURNISH SINGLE SHEET ALUMINUM SIGN			
											UNFRAMED		FRAMED	
							SHEETING COLOR	RETROREFLECTIVE ASTM TYPE	SHEETING COLOR	RETROREFLECTIVE ASTM TYPE	0.063"	0.080"	0.063"	0.080"
											SQFT	SQFT	SQFT	SQFT
S-1	1-1	W74(CA)	60" x 60"	25	x	Pr	Y	VII	B	NON				25
	1-3	R6-3(CA)	48" x 60"	20	x	Pr	W	VII	B	NON			20	
		R48-1(CA)	36" x 18"	4.5	x	Pr	W	VII	B	NON	4.5			
	1-4	R6-4(CA)	48" x 60"	20	x	Pr	W	VII	B	NON			20	
		R48-1(CA)	36" x 18"	4.5	x	Pr	W	VII	B	NON	4.5			
S-2	2-2	W13-2	36" x 48"	12	x	Pr	Y	VII	B	NON	12			
	2-3	R18A(CA)	66" x 48"	22	x	Pr	W	VII	B	NON			22	
	2-5	G84-2(CA)	54" x 48"	18	x	Pr	G	VII	W	VII		18		
S-3	3-2	R5-1	48" x 48"	16	x	Pr	R	VII	W	VII		16		
		R5-1A	42" x 30"	8.75	x	Pr	R	VII	W	VII	8.75			
	3-4	R6-1(L)	36" x 12"	3	x	Pr	B	NONE	B	NONE	3			
		R6-1(R)	36" x 12"	3	x	Pr	B	NONE	B	NONE	3			
	3-6	R6-1(L)	36" x 12"	3	x	Pr	B	NONE	B	NONE	3			
		R6-1(R)	36" x 12"	3	x	Pr	B	NONE	B	NONE	3			
	3-8	R5-1	48" x 48"	16	x	Pr	R	VII	W	VII		16		
		R5-1A	42" x 30"	8.75	x	Pr	R	VII	W	VII	8.75			
	3-10	R5-10C	24" x 12"	2	x	Pr	W	VII	B	NONE	2			
	3-12	W3-3	48" x 48"	16	x	Pr	Y	VII	B	NONE	16			
	3-14	W3-3	48" x 48"	16	x	Pr	Y	VII	B	NONE	16			
	3-15	R61-13(CA)	48" x 30"	10	x	Pr	W	VII	B	NONE		10		
	3-16	R61-13(CA)	48" x 30"	10	x	Pr	W	VII	B	NONE		10		
	3-17	R61-13(CA)	48" x 30"	10	x	Pr	W	VII	B	NONE		10		
	3-18	R61-13(CA)	48" x 30"	10	x	Pr	W	VII	B	NONE		10		
										TOTAL	84.5	90	62	25

ABBREVIATIONS:

Y = YELLOW
B = BLACK
G = GREEN
W = WHITE
R = RED
Pr = PREMIUM

Non = NON-REFLECTIVE
N/A = NOT APPLICABLE

SIGN QUANTITIES

SQ-3

REVISED BY | DATE REVISED
RICHARD DANG | BANG HUA
CALCULATED-DESIGNED BY | CHECKED BY
FUNCTIONAL SUPERVISOR: SON NGUYEN
STATE OF CALIFORNIA - DEPARTMENT OF TRANSPORTATION
Caltrans® DESIGN DIVISION

LAST REVISION 05-07-12 | DATE PLOTTED => 30-MAY-2012 | TIME PLOTTED => 12:58

Dist	COUNTY	ROUTE	POST MILES TOTAL PROJECT	SHEET No.	TOTAL SHEETS
12	Ora	405	5.0/5.6	43	92

REGISTERED CIVIL ENGINEER DATE 05-10-12

5-29-12
PLANS APPROVAL DATE

REGISTERED PROFESSIONAL ENGINEER
BEN IONESCU
No. C65482
Exp. 09-30-13
CIVIL
STATE OF CALIFORNIA

THE STATE OF CALIFORNIA OR ITS OFFICERS OR AGENTS SHALL NOT BE RESPONSIBLE FOR THE ACCURACY OR COMPLETENESS OF SCANNED COPIES OF THIS PLAN SHEET.

ROADWAY QUANTITIES

SHEET No.	LOCATION	STATION LIMITS	Pvmt Str Sec Type	GRIND EXISTING CONCRETE PAVEMENT	JOINTED PLAIN CONCRETE PAVEMENT	LEAN CONCRETE BASE	CLASS 3 AS	RUBBERIZED HMA (GAP GRADED)	HMA (TYPE A)	COLD PLANE AC PAVEMENT	SEAL ISOLATION JOINT	SEAL PAVEMENT JOINT	TACK COAT	CONCRETE PAVEMENT TRANSITION PANEL
				SQYD	CY	CY	CY	TON	TON	SQYD	LF	LF	TON	CY
L-1	NB ROUTE 405	"A" 305+78.12 TO "A" 314+50.00	5	1162.5										
	NB ROUTE 405	"A" 305+78.12 TO "A" 314+50.00	1		395.3	131.8	978.9				871.9	754.2		
	NB ROUTE 5 RIGHT SHOULDER	"A" 305+78.12 TO "A" 314+50.00	2				800.8	101.1	354.0				6.5	
L-2	NB ROUTE 405	"A" 314+50.00 TO "A" 320+78.12	5	837.5										
	NB ROUTE 405	"A" 314+50.00 TO "A" 320+78.12	1		342.0	114.0	846.8				628.1	646.6		5.6
	NB ROUTE 5 RIGHT SHOULDER	"A" 314+50.00 TO "A" 320+78.12	2				576.9	72.9	255.0				4.7	
	CULVER Dr NB OFF-RAMP	"CV" 20+78.12 TO "CV" 27+50.00	4					4.9		37			0.3	
	CULVER Dr NB OFF-RAMP	"CV" 20+78.12 TO "CV" 27+50.00	3				174.2	194.8	1169.1				12.5	
L-3	CULVER Dr NB OFF-RAMP	"CV" 27+50.00 TO "CV" 28+15.00	4					0.5		4			0.1	
	CULVER Dr NB OFF-RAMP	"CV" 27+50.00 TO "CV" 31+35.00	3				46.6	52.1	312.9				2.6	
SUBTOTAL				2000.0	737.3	245.8	3424.2	426.3	2091.0	41	1500.0	1400.8	27.3	5.6
QUANTITY FROM HMA DIKES									5.2					
GRAND TOTAL				2000.00	737.3	245.8	3424.2	426.3	2096.2	41	1500.0	1400.8	26.7	5.6 (*)

PLACE HOT MIX ASPHALT DIKE

SHEET No.	LOCATION	SIDE	STATION LIMITS	PLACE HMA DIKE (TYPE A)	PLACE HMA DIKE (TYPE C)	PLACE HMA DIKE (TYPE F)	HOT MIX ASPHALT (TYPE A)
				LF	LF	LF	TON
L-1	NB ROUTE 5 (MAINLINE)	R†	"A" 307+40.62 TO "A" 308+03.12		62.5		0.2
	NB ROUTE 5 (MAINLINE)	R†	"A" 308+03.12 TO "A" 308+40.62			37.5	0.3
L-2	NB ROUTE 5 (MAINLINE)	R†	"A" 319+90.62 TO "A" 320+53.12		62.5		0.2
	NB ROUTE 5 (MAINLINE)	R†	"A" 320+53.12 TO "A" 320+90.62			37.5	0.3
	CULVER Dr NB OFF-RAMP	R†	"CV" 25+98.47 TO "CV" 27+50.00	151.5			2.1
L-3	CULVER Dr NB OFF-RAMP	R†	"CV" 27+50.00 TO "CV" 29+10.41	160.4			2.1
			TOTAL	311.9	125.0	75.0	5.2 *

* : FOR GRAND TOTAL OF HMA (TYPE A), SEE ROADWAY QUANTITIES TABLE ON THIS SHEET.

SUMMARY OF QUANTITIES

Q-1

REVISED BY | DATE REVISED
DUNG PHAN | BEN IONESCU
CALCULATED-DESIGNED BY | CHECKED BY
FUNCTIONAL SUPERVISOR | KAMRAN MAZHAR
STATE OF CALIFORNIA - DEPARTMENT OF TRANSPORTATION
Caltrans® DESIGN DIVISION

LAST REVISION 11-19-10 | DATE PLOTTED => 30-MAY-2012 | TIME PLOTTED => 12:58

Dist	COUNTY	ROUTE	POST MILES TOTAL PROJECT	SHEET No.	TOTAL SHEETS
12	Ora	405	5.0/5.6	44	92

REGISTERED CIVIL ENGINEER 05-10-12 DATE

5-29-12
PLANS APPROVAL DATE

REGISTERED PROFESSIONAL ENGINEER BEN IONESCU No. C65482 Exp. 09-30-13 CIVIL STATE OF CALIFORNIA

THE STATE OF CALIFORNIA OR ITS OFFICERS OR AGENTS SHALL NOT BE RESPONSIBLE FOR THE ACCURACY OR COMPLETENESS OF SCANNED COPIES OF THIS PLAN SHEET.

METAL BEAM GUARD RAILING (WOOD POST)

SHEET No.	LOCATION	SIDE	STATION LIMITS	MBGR (WOOD POST)	ALTERNNATIVE FLARED TERMINAL SYSTEM	END ANCHOR ASSEMBLY (TYPE SFT)	REMOVE MGBR
				LF	EA	EA	LF
L-1	NB ROUTE 5 (MAINLINE)	R†	"A" 307+65.62 TO "A" 308+40.62	37.5	1	1	
L-2	NB ROUTE 5 (MAINLINE)	R†	"A" 320+15.62 TO "A" 320+90.62	37.5	1	1	
L-2	CULVER Dr NB OFF-RAMP	R†	"CV" 23+75.70 TO "CV" 24+50.70				75.0
			TOTAL	75.0	2	2	75.0

CONCRETE CURB

SHEET No.	STATION LIMITS	MINOR CONCRETE (Misc Conc) CURB	REMOVE CONCRETE CURB
		CY	LF
L-3	"CV" 29+10.41 TO "CV" 31+35.00	15.1	224.6

TEMPORARY WATER POLLUTION CONTROL

	TEMPORARY FIBER ROLLS	TEMPORARY HYDRAULIC MULCH	TEMPORARY CONSTRUCTION ENTRANCE
	LF	SQYD	EA
WPC-1	900	3924	1
WPC-2	1282	4392	
WPC-3	300	648	1
TOTAL	2482	8964	2

EARTHWORK

SHEET No.	LOCATION	SIDE	STATION LIMITS	ROADWAY EXCAVATION	ROADWAY EXCAVATION (TYPE Y-1) (AERIALLY DEPOSITED LEAD)	EMBANKMENT (N)
				CY	CY	CY
L-1	NB ROUTE 5 (MAINLINE)	R†	"A" 307+78.12 TO "A" 314+50.00	2539.2		164.1
	NB ROUTE 5 (MAINLINE)	R†	"A" 308+69.79 TO "A" 314+50.00		27.0	506.3
L-2	NB ROUTE 5 (MAINLINE)	R†	"A" 314+50.00 TO "A" 320+78.12	2091.6	39.0	396.3
	CULVER Dr NB OFF-RAMP	R†	"CV" 20+78.12 TO "CV" 27+50.00	1399.5	55.0	99.8
L-3	CULVER Dr NB OFF-RAMP	R†	"CV" 27+50.00 TO "CV" 28+15.00	204.7	12.0	
	CULVER Dr NB OFF-RAMP	R†	"CV" 28+15.00 TO "CV" 31+50.00	400.8	32.0	
			SUB TOTAL	6635.8	165.0	1166.5
			GRAND TOTAL	6635.8 *	165.0	1166.5

(N) NOT A SEPARATE PAY ITEM, FOR INFORMATION ONLY.
* INCLUDES OVER-EXCAVATION QUANTITY, SEE SHEET C-4

SUMMARY OF QUANTITIES

Q-2

REVISED BY | DATE REVISED
DUNG PHAN | BEN IONESCU
CALCULATED-DESIGNED BY | CHECKED BY
FUNCTIONAL SUPERVISOR | KAMRAN MAZHAR
STATE OF CALIFORNIA - DEPARTMENT OF TRANSPORTATION
Caltrans
DESIGN DIVISION

LAST REVISION 11-19-10 | DATE PLOTTED => 30-MAY-2012 | TIME PLOTTED => 12:58

Dist	COUNTY	ROUTE	POST MILES TOTAL PROJECT	SHEET No.	TOTAL SHEETS
12	Ora	405	5.0/5.6	45	92

05-10-12
LICENSED LANDSCAPE ARCHITECT

5-29-12
PLANS APPROVAL DATE

LICENSED LANDSCAPE ARCHITECT
MATTHEW J. CASLAVKA
Signature
10-31-13
Renewal Date
05-10-12
Date
STATE OF CALIFORNIA

THE STATE OF CALIFORNIA OR ITS OFFICERS OR AGENTS SHALL NOT BE RESPONSIBLE FOR THE ACCURACY OR COMPLETENESS OF SCANNED COPIES OF THIS PLAN SHEET.

ABBREVIATIONS

AMEND — AMENDMENT
B. & B — BALLED AND BURLAPPED
Dia — DIAMETER
EA — EACH
LB — POUND
Oz — OUNCE
Ft — FOOT/FEET
SQFT — SQUARE FEET
SQYD — SQUARE YARD
CF — CUBIC FEET
Max — MAXIMUM
Min — MINIMUM
NCN — NO COMMON NAME
No. — NUMBER
Pkt — PACKET
PLT ESTB — PLANT ESTABLISHMENT
Pvmt — PAVEMENT
R/W — RIGHT OF WAY
SF — STATE FURNISHED
TRVD — TRAVELED

APPLICABLE WHEN CIRCLED:

1 - QUANTITIES SHOWN ARE "PER PLANT" UNLESS SHOWN AS SQFT OR SQYD APPLICATION RATES.
2 - SUFFICIENT TO RECEIVE ROOT BALL.
3 - DOES NOT APPLY TO MULCH AREAS.
4 - AS SHOWN ON PLANS.
5 - UNLESS OTHERWISE SHOWN ON PLANS.
6 - SEE DETAIL.
7 - SEE SPECIAL PROVISIONS.

NOTE:

UNDERLINED PORTIONS OF BOTANICAL NAME INDICATE ABBREVIATIONS USED ON PLANTING PLANS.

PLANT LIST AND PLANTING SPECIFICATIONS

PLANT GROUP	PLANT No.	SYMBOL	BOTANICAL NAME	COMMON NAME	SIZE	QUANTITY EACH	HOLE SIZE (INCH) Dia	HOLE SIZE (INCH) DEPTH	BASIN TYPE	IRON SULFATE	SOIL AMEND	COMMERCIAL FERTILIZER PLANTING	COMMERCIAL FERTILIZER PLT ESTB	BASIN MULCH	STAKING	PLANTING LIMITS MINIMUM DISTANCE (Ft) FROM TRVD WAY	PVMT	FENCE	WALL	PAVED DITCH	EARTH DITCH	ON CENTER (Ft)	REMARKS
F	1		MYOPORUM PARVIFOLIUM	MYOPORUM	FLAT	15200	2	2	—	—	—	—	—	—	—	—	6	6	6	6	6	1.5	
H	2		CARPOBROTUS EDULIS	HOTTENTOT FIG	CUTTING	19655	2	2	—	—	—	—	—	—	—	—	6	6	6	6	8	1.5	

MAINTAIN EXISTING PLANTED AREAS

EXISTING TREES TO BE PROTECTED AND MAINTAINED

STATE OF CALIFORNIA - DEPARTMENT OF TRANSPORTATION
Caltrans
LANDSCAPE ARCHITECTURE

SENIOR LANDSCAPE ARCHITECT: ERIC DICKSON
CALCULATED-DESIGNED BY: JARED GODETT
CHECKED BY: MATTHEW CASLAVKA
REVISED BY
DATE REVISED

PLANT LIST
PL-1

LAST REVISION 00-00-00
DATE PLOTTED => 30-MAY-2012
TIME PLOTTED => 12:58

Dist	COUNTY	ROUTE	POST MILES TOTAL PROJECT	SHEET No.	TOTAL SHEETS
12	Ora	405	5.0/5.6	46	92

05-10-12
LICENSED LANDSCAPE ARCHITECT

5-29-12
PLANS APPROVAL DATE

LICENSED LANDSCAPE ARCHITECT
MATTHEW J CASLAVKA 3054
Signature
10-31-13
Renewal Date
05-10-12
Date
STATE OF CALIFORNIA

THE STATE OF CALIFORNIA OR ITS OFFICERS OR AGENTS SHALL NOT BE RESPONSIBLE FOR THE ACCURACY OR COMPLETENESS OF SCANNED COPIES OF THIS PLAN SHEET.

NOTE:

FOR ACCURATE RIGHT OF WAY DATA, CONTACT RIGHT OF WAY ENGINEERING AT THE DISTRICT OFFICE.

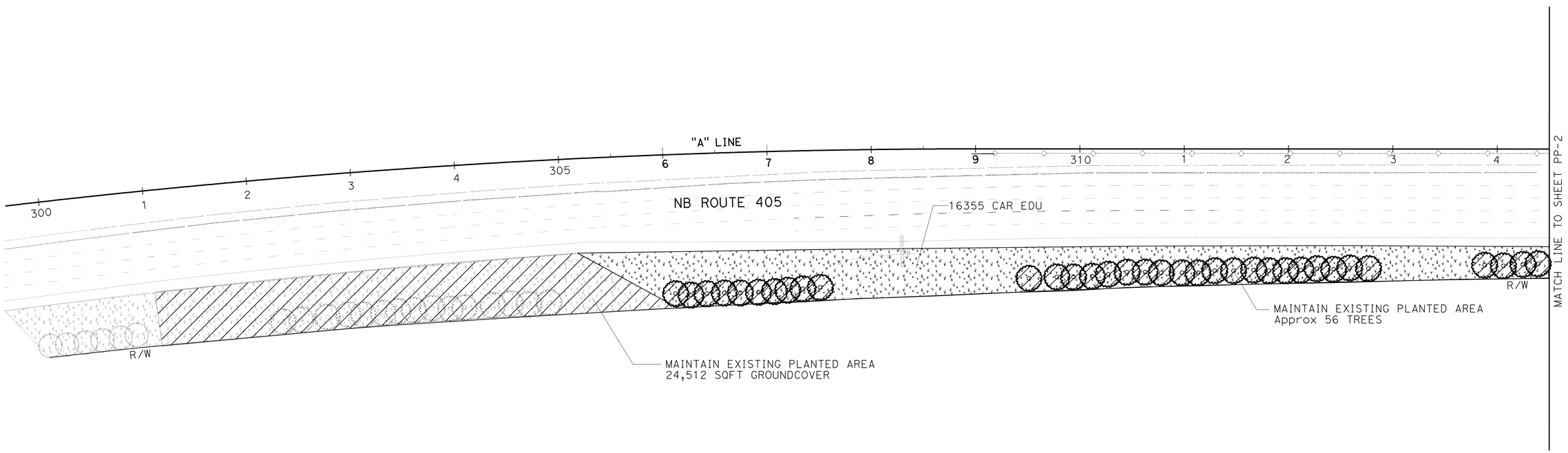

MAINTAIN EXISTING PLANTS AND PLANTING PLAN

SCALE: 1" = 50'

PP-1

APPROVED FOR PLANTING WORK ONLY

STATE OF CALIFORNIA - DEPARTMENT OF TRANSPORTATION
LANDSCAPE ARCHITECTURE

SENIOR LANDSCAPE ARCHITECT: ERIC DICKSON
CALCULATED-DESIGNED BY: JARED GODETT
CHECKED BY: MATTHEW CASLAVKA
REVISED BY
DATE REVISED

LAST REVISION 00-00-00
DATE PLOTTED => 30-MAY-2012
TIME PLOTTED => 14:03

Dist	COUNTY	ROUTE	POST MILES TOTAL PROJECT	SHEET No.	TOTAL SHEETS
12	Ora	405	5.0/5.6	47	92

05-10-12
LICENSED LANDSCAPE ARCHITECT

5-29-12
PLANS APPROVAL DATE

LICENSED LANDSCAPE ARCHITECT
MATTHEW J. CASLAVKA
Signature
10-31-13
Renewal Date
05-10-12
Date
STATE OF CALIFORNIA

THE STATE OF CALIFORNIA OR ITS OFFICERS OR AGENTS SHALL NOT BE RESPONSIBLE FOR THE ACCURACY OR COMPLETENESS OF SCANNED COPIES OF THIS PLAN SHEET.

NOTE:

FOR ACCURATE RIGHT OF WAY DATA, CONTACT RIGHT OF WAY ENGINEERING AT THE DISTRICT OFFICE.

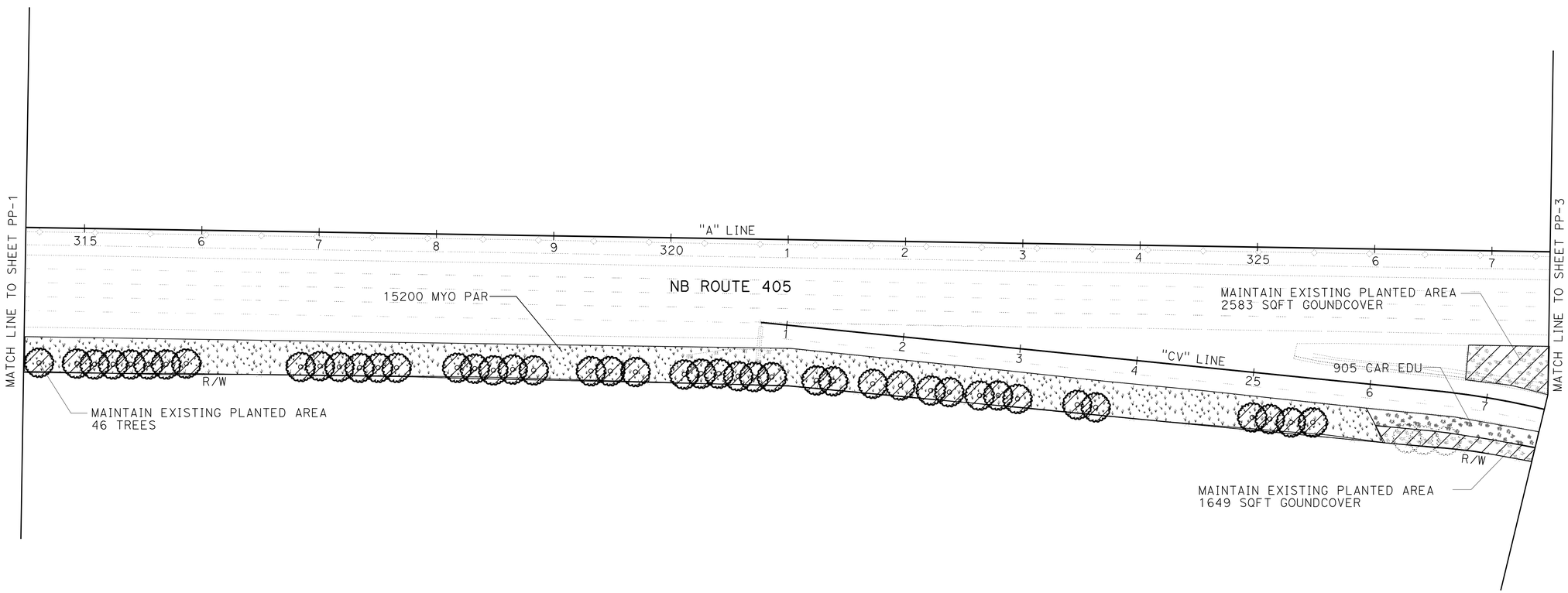

MAINTAIN EXISTING PLANTS AND PLANTING PLAN

SCALE: 1" = 50'

PP-2

APPROVED FOR PLANTING WORK ONLY

STATE OF CALIFORNIA - DEPARTMENT OF TRANSPORTATION
LANDSCAPE ARCHITECTURE

SENIOR LANDSCAPE ARCHITECT: ERIC DICKSON
CALCULATED-DESIGNED BY: JARED GODETT
CHECKED BY: MATTHEW CASLAVKA
REVISED BY
DATE REVISED

LAST REVISION 00-00-00
DATE PLOTTED => 30-MAY-2012
TIME PLOTTED => 14:06

Dist	COUNTY	ROUTE	POST MILES TOTAL PROJECT	SHEET No.	TOTAL SHEETS
12	Ora	405	5.0/5.6	48	92

05-10-12
LICENSED LANDSCAPE ARCHITECT

5-29-12
PLANS APPROVAL DATE

LICENSED LANDSCAPE ARCHITECT
MATTHEW J CASLAVKA 3024
Signature
10-31-13
Renewal Date
05-10-12
Date
STATE OF CALIFORNIA

THE STATE OF CALIFORNIA OR ITS OFFICERS OR AGENTS SHALL NOT BE RESPONSIBLE FOR THE ACCURACY OR COMPLETENESS OF SCANNED COPIES OF THIS PLAN SHEET.

NOTE:

FOR ACCURATE RIGHT OF WAY DATA, CONTACT RIGHT OF WAY ENGINEERING AT THE DISTRICT OFFICE.

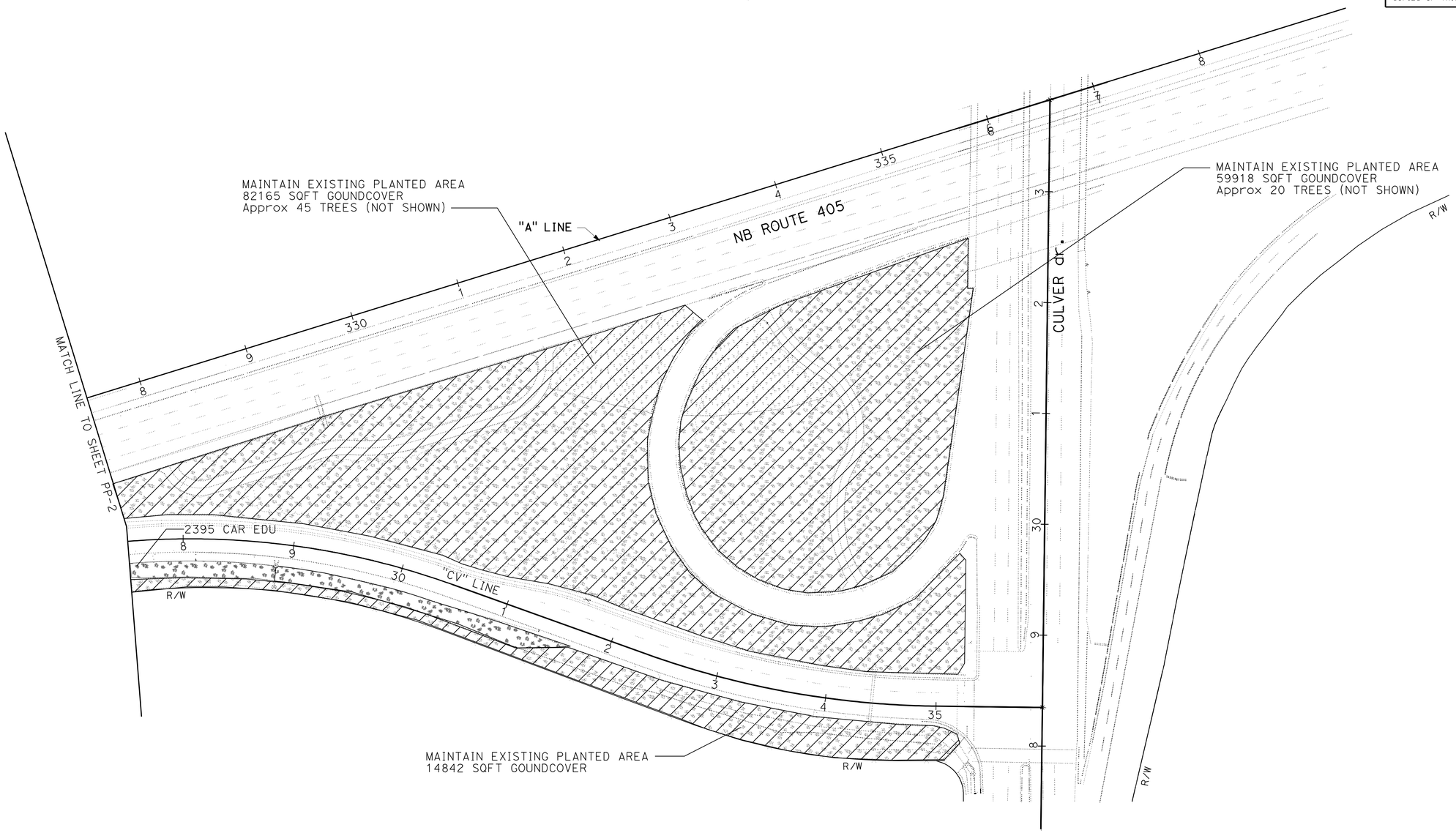

MAINTAIN EXISTING PLANTS AND PLANTING PLAN

SCALE: 1" = 50'

PP-3

APPROVED FOR PLANTING WORK ONLY

STATE OF CALIFORNIA - DEPARTMENT OF TRANSPORTATION
LANDSCAPE ARCHITECTURE
SENIOR LANDSCAPE ARCHITECT: ERIC DICKSON
CALCULATED-DESIGNED BY: JARED GODETT
CHECKED BY: MATTHEW CASLAVKA
REVISED BY
DATE REVISED

LAST REVISION 00-00-00
DATE PLOTTED => 30-MAY-2012
TIME PLOTTED => 14:04

Dist	COUNTY	ROUTE	POST MILES TOTAL PROJECT	SHEET No.	TOTAL SHEETS
12	Ora	405	5.0/5.6	49	92

05-10-12
LICENSED LANDSCAPE ARCHITECT

5-29-12
PLANS APPROVAL DATE

LICENSED LANDSCAPE ARCHITECT
MATTHEW J. CASLAVKA
Signature
10-31-13
Renewal Date
05-10-12
Date
STATE OF CALIFORNIA

THE STATE OF CALIFORNIA OR ITS OFFICERS OR AGENTS SHALL NOT BE RESPONSIBLE FOR THE ACCURACY OR COMPLETENESS OF SCANNED COPIES OF THIS PLAN SHEET.

NOTES:

1. FOR ACCURATE RIGHT OF WAY DATA, CONTACT RIGHT OF WAY ENGINEERING AT THE DISTRICT OFFICE

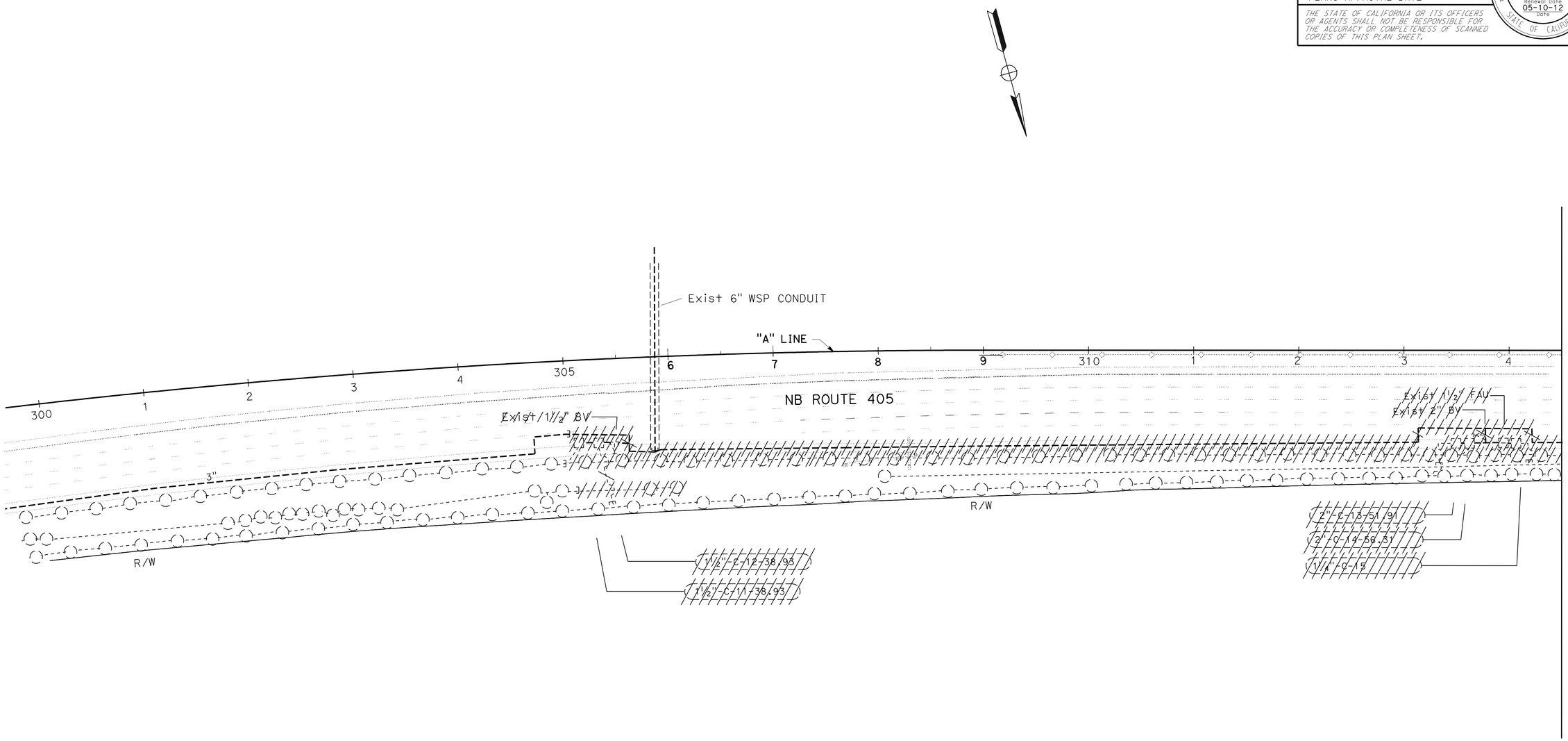

IRRIGATION REMOVAL PLAN

SCALE: 1" = 50'

IR-1

APPROVED FOR IRRIGATION REMOVAL WORK ONLY

STATE OF CALIFORNIA - DEPARTMENT OF TRANSPORTATION
Caltrans®
LANDSCAPE ARCHITECTURE

SENIOR LANDSCAPE ARCHITECT: ERIC DICKSON

CALCULATED-DESIGNED BY: JARED GODETT
CHECKED BY: MATTHEW CASLAVKA

REVISED BY
DATE REVISED

LAST REVISION 00-00-00
DATE PLOTTED => 30-MAY-2012
TIME PLOTTED => 13:23

Dist	COUNTY	ROUTE	POST MILES TOTAL PROJECT	SHEET No.	TOTAL SHEETS
12	Ora	405	5.0/5.6	50	92

05-10-12
LICENSED LANDSCAPE ARCHITECT

5-29-12
PLANS APPROVAL DATE

LICENSED LANDSCAPE ARCHITECT
MATTHEW J CASLAVKA 3024
Signature
10-31-13
Renewal Date
05-10-12
Date
STATE OF CALIFORNIA

THE STATE OF CALIFORNIA OR ITS OFFICERS OR AGENTS SHALL NOT BE RESPONSIBLE FOR THE ACCURACY OR COMPLETENESS OF SCANNED COPIES OF THIS PLAN SHEET.

NOTES:

1. FOR ACCURATE RIGHT OF WAY DATA, CONTACT RIGHT OF WAY ENGINEERING AT THE DISTRICT OFFICE

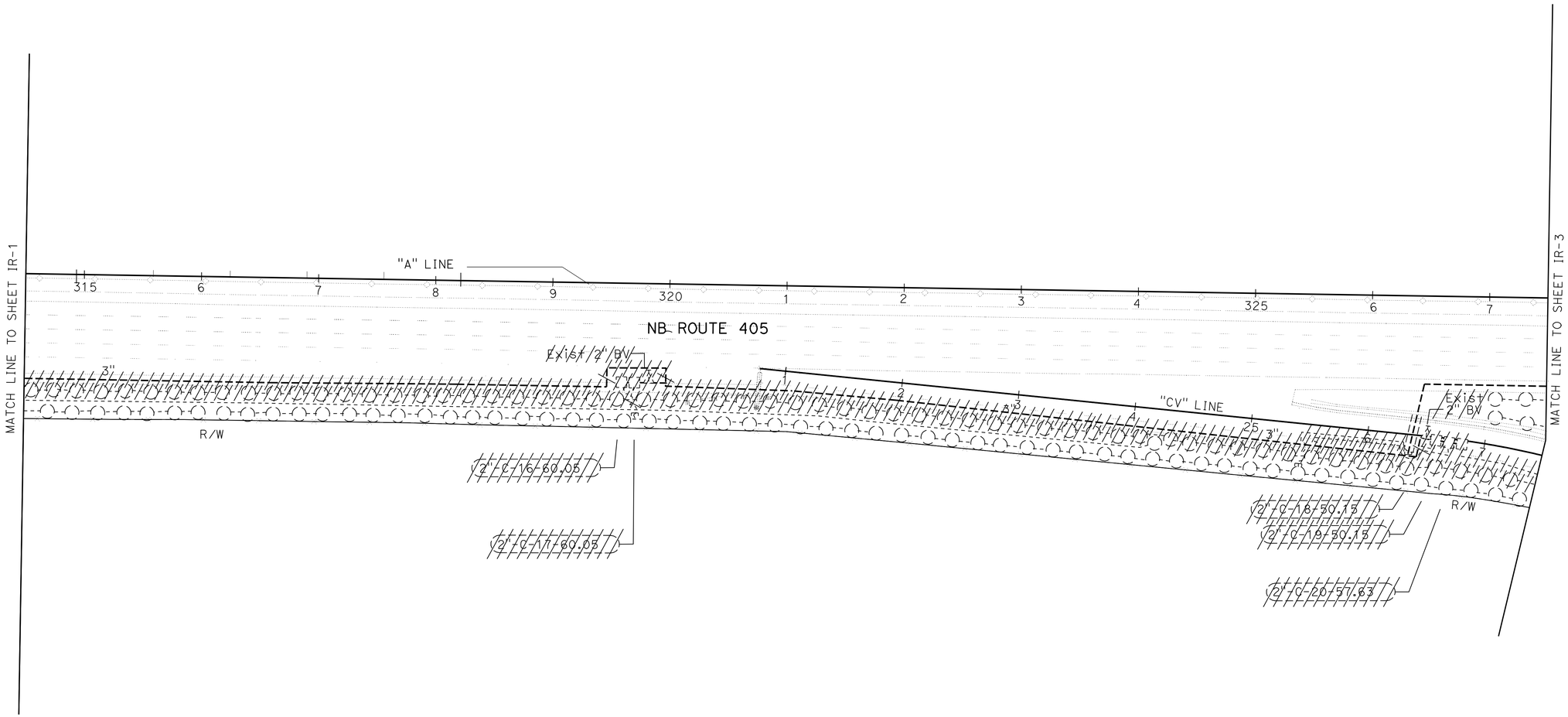

IRRIGATION REMOVAL PLAN

SCALE: 1" = 50'

IR-2

APPROVED FOR IRRIGATION REMOVAL WORK ONLY

STATE OF CALIFORNIA - DEPARTMENT OF TRANSPORTATION
Caltrans®
LANDSCAPE ARCHITECTURE

SENIOR LANDSCAPE ARCHITECT: ERIC DICKSON
CALCULATED-DESIGNED BY: JARED GODETT
CHECKED BY: MATTHEW CASLAVKA
REVISED BY
DATE REVISED

LAST REVISION 00-00-00
DATE PLOTTED => 30-MAY-2012
TIME PLOTTED => 13:23

Dist	COUNTY	ROUTE	POST MILES TOTAL PROJECT	SHEET No.	TOTAL SHEETS
12	Ora	405	5.0/5.6	51	92

05-10-12
LICENSED LANDSCAPE ARCHITECT

5-29-12
PLANS APPROVAL DATE

LICENSED LANDSCAPE ARCHITECT
MATTHEW J CASLAVKA 3023
Signature
10-31-13
Renewal Date
05-10-12
Date
STATE OF CALIFORNIA

THE STATE OF CALIFORNIA OR ITS OFFICERS OR AGENTS SHALL NOT BE RESPONSIBLE FOR THE ACCURACY OR COMPLETENESS OF SCANNED COPIES OF THIS PLAN SHEET.

NOTES:

1. FOR ACCURATE RIGHT OF WAY DATA, CONTACT RIGHT OF WAY ENGINEERING AT THE DISTRICT OFFICE

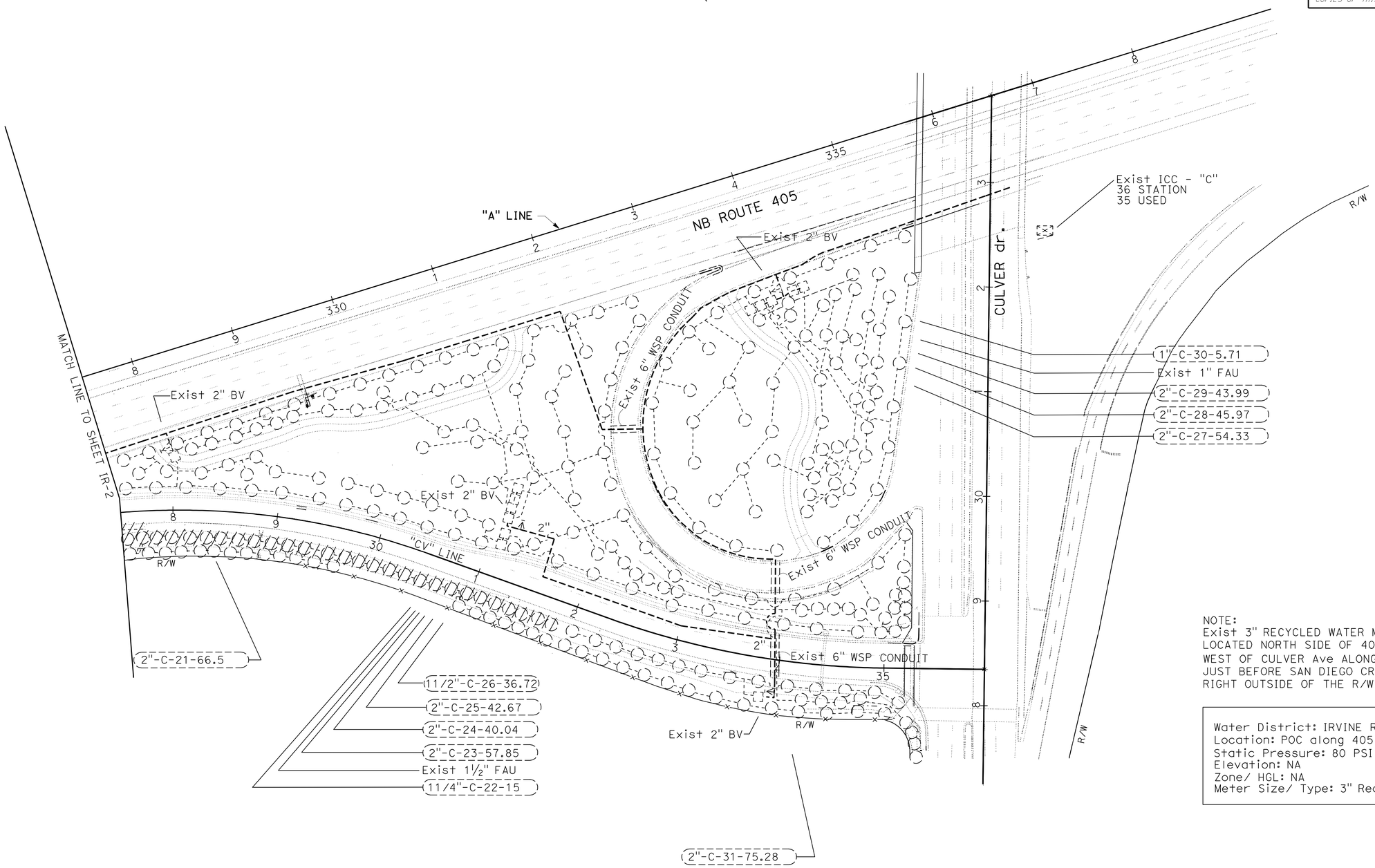

NOTE:
Exist 3" RECYCLED WATER METER
LOCATED NORTH SIDE OF 405
WEST OF CULVER Ave ALONG MAINLINE
JUST BEFORE SAN DIEGO CREEK CHANNEL
RIGHT OUTSIDE OF THE R/W.

Water District: IRVINE RANCH WATER DISTRICT
Location: POC along 405 at San Diego Creek
Static Pressure: 80 PSI
Elevation: NA
Zone/ HGL: NA
Meter Size/ Type: 3" Reclaimed

IRRIGATION REMOVAL PLAN

SCALE: 1" = 50'

IR-3

APPROVED FOR IRRIGATION REMOVAL WORK ONLY

STATE OF CALIFORNIA - DEPARTMENT OF TRANSPORTATION
Caltrans®
LANDSCAPE ARCHITECTURE

SENIOR LANDSCAPE ARCHITECT: ERIC DICKSON
CALCULATED-DESIGNED BY: JARED GODETT
CHECKED BY: MATTHEW CASLAVKA
REVISED BY
DATE REVISED

LAST REVISION 00-00-00
DATE PLOTTED => 30-MAY-2012
TIME PLOTTED => 13:23

Dist	COUNTY	ROUTE	POST MILES TOTAL PROJECT	SHEET No.	TOTAL SHEETS
12	Ora	405	5.0/5.6	52	92

05-10-12
LICENSED LANDSCAPE ARCHITECT

5-29-12
PLANS APPROVAL DATE

LICENSED LANDSCAPE ARCHITECT
MATTHEW J. CASLAVKA 3024
Signature
10-31-13
Renewal Date
05-10-12
Date
STATE OF CALIFORNIA

THE STATE OF CALIFORNIA OR ITS OFFICERS OR AGENTS SHALL NOT BE RESPONSIBLE FOR THE ACCURACY OR COMPLETENESS OF SCANNED COPIES OF THIS PLAN SHEET.

NOTES:

1. FOR ACCURATE RIGHT OF WAY DATA, CONTACT RIGHT OF WAY ENGINEERING AT THE DISTRICT OFFICE

NOTE:
IRRIGATION MAINLINE, VALVES AND CNC WIRE SHALL BE INSTALLED AT TOP OF SLOPE.

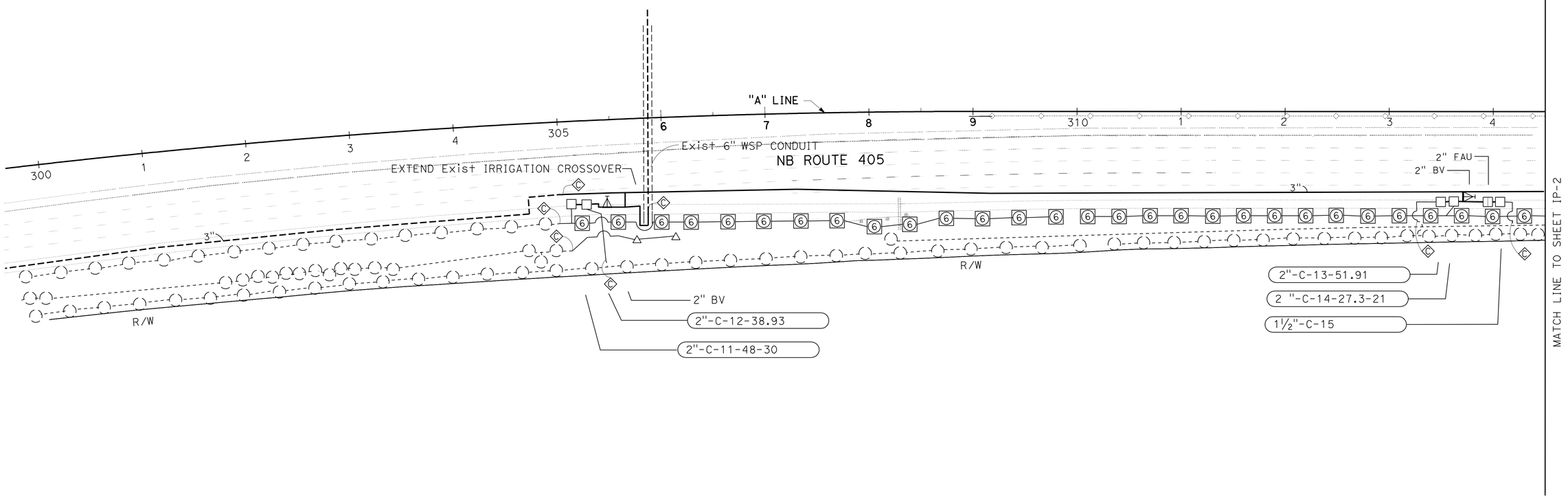

IRRIGATION PLAN

SCALE: 1" = 50'

IP-1

APPROVED FOR IRRIGATION WORK ONLY

STATE OF CALIFORNIA - DEPARTMENT OF TRANSPORTATION
Caltrans®
LANDSCAPE ARCHITECTURE

SENIOR LANDSCAPE ARCHITECT: ERIC DICKSON

CALCULATED-DESIGNED BY: JARED GODETT
CHECKED BY: MATTHEW CASLAVKA

REVISED BY
DATE REVISED

LAST REVISION 00-00-00
DATE PLOTTED => 30-MAY-2012
TIME PLOTTED => 13:24

Dist	COUNTY	ROUTE	POST MILES TOTAL PROJECT	SHEET No.	TOTAL SHEETS
12	Ora	405	5.0/5.6	53	92

05-10-12
LICENSED LANDSCAPE ARCHITECT

5-29-12
PLANS APPROVAL DATE

LICENSED LANDSCAPE ARCHITECT
MATTHEW J. CASLAVKA 3054
Signature
10-31-11
Renewal Date
05-10-12
Date
STATE OF CALIFORNIA

THE STATE OF CALIFORNIA OR ITS OFFICERS OR AGENTS SHALL NOT BE RESPONSIBLE FOR THE ACCURACY OR COMPLETENESS OF SCANNED COPIES OF THIS PLAN SHEET.

NOTES:

1. FOR ACCURATE RIGHT OF WAY DATA, CONTACT RIGHT OF WAY ENGINEERING AT THE DISTRICT OFFICE

NOTE:
IRRIGATION MAINLINE, VALVES AND CNC WIRE SHALL BE INSTALLED AT TOP OF SLOPE.

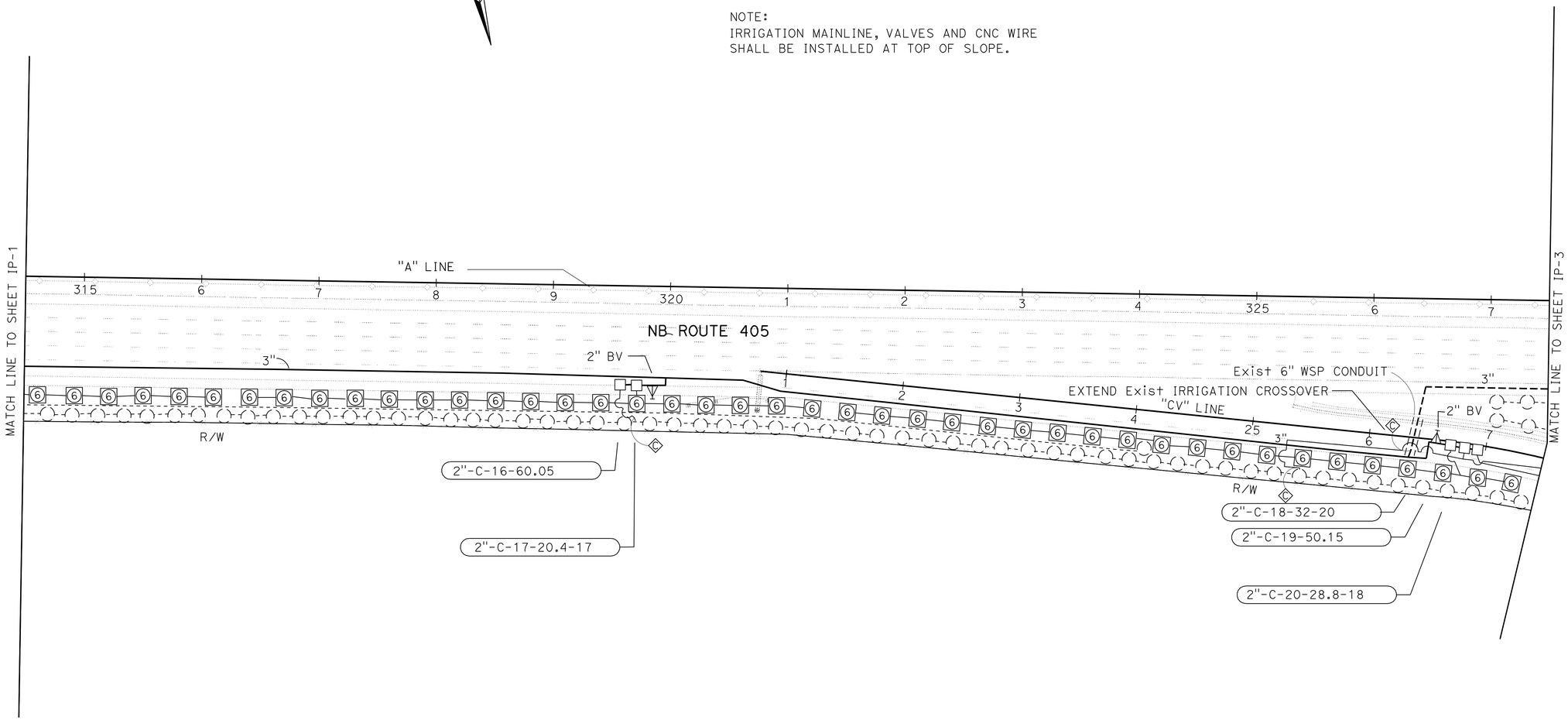

IRRIGATION PLAN

SCALE: 1" = 50'

IP-2

APPROVED FOR IRRIGATION WORK ONLY

STATE OF CALIFORNIA - DEPARTMENT OF TRANSPORTATION
Caltrans®
LANDSCAPE ARCHITECTURE

SENIOR LANDSCAPE ARCHITECT: ERIC DICKSON
CALCULATED-DESIGNED BY: JARED GODETT
CHECKED BY: MATTHEW CASLAVKA
REVISED BY
DATE REVISED

LAST REVISION 00-00-00
DATE PLOTTED => 30-MAY-2012
TIME PLOTTED => 13:24

Dist	COUNTY	ROUTE	POST MILES TOTAL PROJECT	SHEET No.	TOTAL SHEETS
12	Ora	405	5.0/5.6	54	92

05-10-12
LICENSED LANDSCAPE ARCHITECT

5-29-12
PLANS APPROVAL DATE

LICENSED LANDSCAPE ARCHITECT
MATTHEW J CASLAVKA 3023
Signature
10-31-13
Renewal Date
05-10-12
Date
STATE OF CALIFORNIA

THE STATE OF CALIFORNIA OR ITS OFFICERS OR AGENTS SHALL NOT BE RESPONSIBLE FOR THE ACCURACY OR COMPLETENESS OF SCANNED COPIES OF THIS PLAN SHEET.

NOTES:

1. FOR ACCURATE RIGHT OF WAY DATA, CONTACT RIGHT OF WAY ENGINEERING AT THE DISTRICT OFFICE

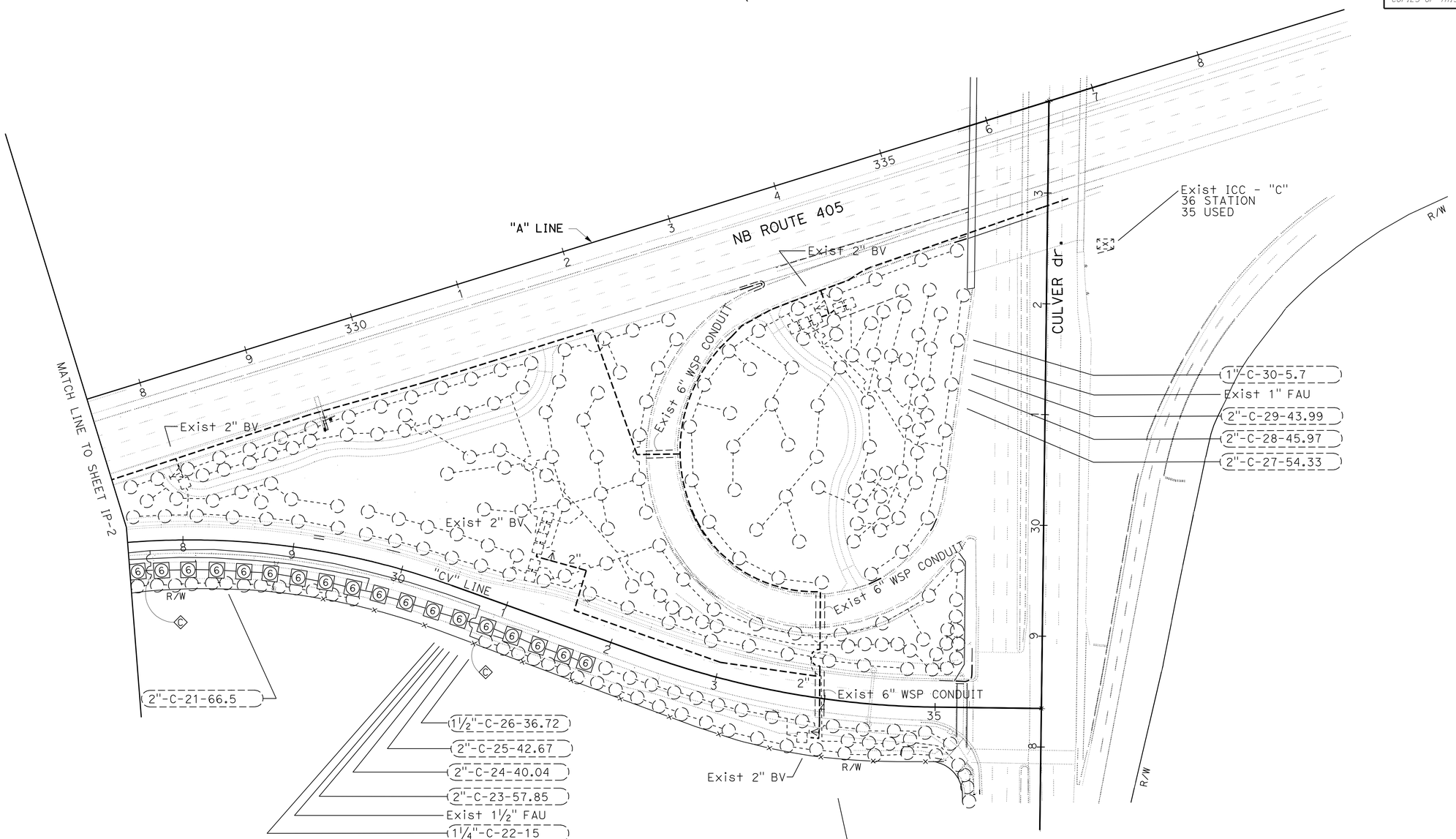

APPROVED FOR IRRIGATION WORK ONLY

IRRIGATION PLAN

SCALE: 1" = 50'

IP-3

STATE OF CALIFORNIA - DEPARTMENT OF TRANSPORTATION
Caltrans®
LANDSCAPE ARCHITECTURE

SENIOR LANDSCAPE ARCHITECT: ERIC DICKSON
CALCULATED-DESIGNED BY: JARED GODETT
CHECKED BY: MATTHEW CASLAVKA
REVISED BY
DATE REVISED

LAST REVISION 00-00-00
DATE PLOTTED => 30-MAY-2012
TIME PLOTTED => 13:24

Dist	COUNTY	ROUTE	POST MILES TOTAL PROJECT	SHEET No.	TOTAL SHEETS
12	Ora	405	5.0/5.6	55	92

LICENSED LANDSCAPE ARCHITECT 05-10-12

5-29-12
PLANS APPROVAL DATE

LICENSED LANDSCAPE ARCHITECT MATTHEW J CASLAVKA 3094 Signature 10-31-13 Renewal Date 05-10-12 Date STATE OF CALIFORNIA

THE STATE OF CALIFORNIA OR ITS OFFICERS OR AGENTS SHALL NOT BE RESPONSIBLE FOR THE ACCURACY OR COMPLETENESS OF SCANNED COPIES OF THIS PLAN SHEET.

SPRINKLER SCHEDULE

SYMBOL	TYPE	DESCRIPTION	SPRAY PATTERN	OPERATING PRESSURE (PSI)	PRESSURE COMPENSATING	PLUS/MINUS 5% ② DISCHARGE GALLONS PER MINUTE (GPM)	RADIUS (Ft)	WIDTH x LENGTH (Ft)	MATERIAL	INLET CONNECTION (NPT INCH)	POSITIVE-LOCKING Adj ARC STOP	BACKSPLASH PREVENTER	DIFFUSER PIN	DISTANCE CONTROL FLAP	CHECK VALVE	RISER TYPE	RISER MATERIAL PLASTIC	RISER MATERIAL GALVANIZED	RISER SIZE (IPS INCH)	RISER HEIGHT (INCH)	RISER FLOW SHUTOFF DEVICE	⑤ SWING JOINT (TYPE)	RISER SUPPORT	SPRINKLER PROTECTOR (TYPE)	REMARKS
⑥	A-6	GEAR DRIVEN POP-UP	P	50	—	1.2 / 1.6	30/35	—	PL	¾	X	—	—	—	X	—	X	—	¾	—	X	I	—	I	12" POP-UP
△	B-1	SHRUB SPRAY	P	30	—	.39	10	—	PL	½	—	—	—	—	X	IV	X	—	½	18	X	III	—	—	

X IN BOX DENOTES REQUIREMENT

APPLICABLE WHEN CIRCLED BELOW:

1 - See Special Provisions.
2 - If a pressure compensating device is specified, the discharge and radii shown reflect its use.
3 - Arc Stop shall be fitted with a nut and bolt.
4 - Vinyl-coated cast iron housing.
⑤ - Swing Joints required adjacent to shoulders, curbs, sidewalks, and dikes.
6 - Unless otherwise shown on plans.

ABBREVIATIONS:

F — full circle
P — part circle
F/P — full/part circle
Q — quarter circle
T — third circle
H — half circle
TT — two third circle
TQ — three quarter circle
CST — center strip
SST — side strip
EST — end strip
Ft — feet/foot
GPM — gallons per minute
GPH — gallons per hour
Adj — adjustable
PL — plastic
B/B — brass/bronze
B/PL — brass/plastic
B/B/PL — brass/bronze/plastic
NPT — national pipe thread
IPS — iron pipe size
PSI — pounds per square inch

EXTEND IRRIGATION CROSSOVERS

LOCATION LINE	LOCATION STATION	SIDE L+	SIDE R+	EXTEND CONDUIT SIZE (INCH) 6"	EXTEND CONDUIT LENGTH (LF)	CB	OL	(N) WATER LINE CROSSOVER SIZE (INCH)	(N) SPRINKLER CONTROL CROSSOVER SIZE (INCH)
CV	26 + 30	—	X	15′	—	X	—	3"	—
A	305 + 90	—	X	15′	—	X	—	3"	—
TOTAL				30′					

(N) - NOT A SEPARATE PAY ITEM FOR INFORMATION ONLY
X - DENOTES REQUIREMENT

ABBREVIATIONS:

CB - COUPLING BAND
OL - OVERLAP

1 in	1¼ in	1½ in	2 in
0-12 gal/min	13-22 gal/min	23-30 gal/min	31-50 gal/min

PIPE SIZING CHART ALL SPRINKLERS (PVC SCH 40) (SIZE LATERAL LINE)

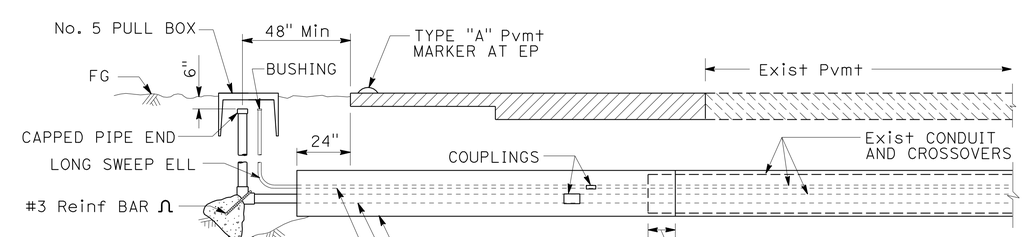

SECTION

EXTEND IRRIGATION CROSSOVER

SPRINKLER SCHEDULE
LD-1

REVISED BY | DATE REVISED
JARED GODETT | MATTHEW CASLAVKA
CALCULATED-DESIGNED BY | CHECKED BY
SENIOR LANDSCAPE ARCHITECT | ERIC DICKSON
STATE OF CALIFORNIA - DEPARTMENT OF TRANSPORTATION
Caltrans
LANDSCAPE ARCHITECTURE

LAST REVISION 00-00-00 | DATE PLOTTED => 30-MAY-2012 | TIME PLOTTED => 13:24

Dist	COUNTY	ROUTE	POST MILES TOTAL PROJECT	SHEET No.	TOTAL SHEETS
12	Ora	405	5.0/5.6	56	92

05-10-12
LICENSED LANDSCAPE ARCHITECT

5-29-12
PLANS APPROVAL DATE

LICENSED LANDSCAPE ARCHITECT
MATTHEW J. CASLAVKA 3024
Signature
10-31-13
Renewal Date
05-10-12
Date
STATE OF CALIFORNIA

THE STATE OF CALIFORNIA OR ITS OFFICERS OR AGENTS SHALL NOT BE RESPONSIBLE FOR THE ACCURACY OR COMPLETENESS OF SCANNED COPIES OF THIS PLAN SHEET.

ABBREVIATIONS:

EA — each
DIP — ductile iron pipe
GSP — galvanized steel pipe
Ft — foot/feet
PR — pressure rated

SUBTOTALS PER VALVE ON LATERAL SUPPLY SIDE OF CONTROL VALVE

DESCRIPTION		UNIT	VALVE OR ASSEMBLY NUMBER (CONTROLLER C)											SUBTOTALS	UNIT	DESCRIPTION	
				11	12	13	14	15	16	17	18	19	20				
PLASTIC PIPE SUPPLY LINE	UVR-PVC SCH 40	1"	LF	100	250			570			460	370		435	2185	LF	1"	UVR-PVC SCH 40 PLASTIC PIPE SUPPLY LINE
		1¼"	LF		110						40	220	380		750	LF	1¼"	
		1½"	LF		120			100	30			40	280	300	870	LF	1½"	
		2"	LF		30	40									70	LF	2"	
		2½"	LF				40			30					70	LF	2½"	
PLASTIC PIPE (IRRIGATION LINE)																		PLASTIC PIPE (IRRIGATION LINE)
SPRINKLER TYPE		A-6	EA		14			21			17	20		18	90	EA	A-6	SPRINKLER TYPE
		B-1	EA	2											2	EA	B-1	

SPRINKLER SCHEDULE
LD-2

STATE OF CALIFORNIA - DEPARTMENT OF TRANSPORTATION
Caltrans®
LANDSCAPE ARCHITECTURE

SENIOR LANDSCAPE ARCHITECT: ERIC DICKSON
CALCULATED-DESIGNED BY: JARED GODETT
CHECKED BY: MATTHEW CASLAVKA
REVISED BY / DATE REVISED

LAST REVISION 00-00-00
DATE PLOTTED => 30-MAY-2012
TIME PLOTTED => 13:24

Dist	COUNTY	ROUTE	POST MILES TOTAL PROJECT	SHEET No.	TOTAL SHEETS
12	Ora	405	5.0/5.6	57	92

LICENSED LANDSCAPE ARCHITECT 05-10-12

5-29-12
PLANS APPROVAL DATE

LICENSED LANDSCAPE ARCHITECT MATTHEW J CASLAVKA 3024 Signature 10-31-13 Renewal Date 05-10-12 Date STATE OF CALIFORNIA

THE STATE OF CALIFORNIA OR ITS OFFICERS OR AGENTS SHALL NOT BE RESPONSIBLE FOR THE ACCURACY OR COMPLETENESS OF SCANNED COPIES OF THIS PLAN SHEET.

SUBTOTALS PER PLAN SHEET ON MAIN SUPPLY SIDE OF CONTROL VALVE

DESCRIPTION			UNIT	SHEET NUMBER 1	2	3	SUBTOTALS
BPA							
BPA		ENCLOSURE					
BPA		BOOSTER PUMP					
IRRIGATION CONTROLLER		STATION					
IRRIGATION CONTROLLER		STATION					
IRRIGATION CONTROLLER		STATION					
IRRIGATION CONTROLLER	CEC	SINGLE					
IRRIGATION CONTROLLER	CEC	DOUBLE					
VALVES AND ASSEMBLIES	BV	2"	EA	2	2		4
VALVES AND ASSEMBLIES	RCV	1½"	EA	1			1
VALVES AND ASSEMBLIES	RCV	2"	EA	4	5		9
VALVES AND ASSEMBLIES	FAU	2"	EA	1			1
CONDUIT	WSP						
PLASTIC PIPE SUPPLY LINE	SCH 40	1"	LF	750	1000	435	2185
PLASTIC PIPE SUPPLY LINE	SCH 40	1¼"	LF	110	260	380	750
PLASTIC PIPE SUPPLY LINE	SCH 40	1½"	LF	210	360	300	870
PLASTIC PIPE SUPPLY LINE	SCH 40	2"	LF	190	100		290
PLASTIC PIPE SUPPLY LINE	SCH 40	2½"	LF	40	30		70
PLASTIC PIPE SUPPLY LINE	UVR	3"	LF	1000	1200		2200
SPRINKLER TYPE		A-6	EA	29	43	18	90
SPRINKLER TYPE		B-1	EA	2			2

TOTAL QUANTITIES

TOTALS	UNIT	DESCRIPTION	
			BPA
		ENCLOSURE	BPA
		BOOSTER PUMP	BPA
		42 STATION	IRRIGATION CONTROLLER
		STATION	IRRIGATION CONTROLLER
		STATION	IRRIGATION CONTROLLER
		SINGLE	IRRIGATION CONTROLLER CEC
		DOUBLE	IRRIGATION CONTROLLER CEC
4	EA	2"	VALVES AND ASSEMBLIES BV
1	EA	1½"	VALVES AND ASSEMBLIES RCV
9	EA	2"	VALVES AND ASSEMBLIES RCV
1	EA	2"	VALVES AND ASSEMBLIES FAU
			CONDUIT WSP
2185	LF	1"	PLASTIC PIPE SUPPLY LINE SCH 40
750	LF	1¼"	PLASTIC PIPE SUPPLY LINE SCH 40
870	LF	1½"	PLASTIC PIPE SUPPLY LINE SCH 40
290	LF	2"	PLASTIC PIPE SUPPLY LINE SCH 40
70	LF	2½"	PLASTIC PIPE SUPPLY LINE SCH 40
2200	LF	3"	PLASTIC PIPE SUPPLY LINE UVR
90	EA	A-6	SPRINKLER TYPE
2	EA	B-1	SPRINKLER TYPE

ABBREVIATIONS:

BPA — backflow preventer assembly
BV — ball valve
CV — check valve
CEC — controller enclosure cabinet
CSP — corrugated steel pipe
DIP — ductile iron pipe
EA — each
FAU — filter assembly unit
FCV — flow control valve
FS — flow sensor
FV — flush valve
GSP — galvanized steel pipe
GV — gate valve
MCV — manual control valve
Ft — foot/feet
PR — pressure rated
PRV — pressure reducing valve
PRLV — pressure relief valve
QCV — quick coupling valve
RCV — remote control valve
RCVM — remote control valve (master)
UVR — ultrviolet resistent
VAU — valve assembly unit
WSP — welded steel pipe
WS — wye strainer

SPRINKLER SCHEDULE
LD-3

STATE OF CALIFORNIA - DEPARTMENT OF TRANSPORTATION
Caltrans®
LANDSCAPE ARCHITECTURE

SENIOR LANDSCAPE ARCHITECT: ERIC DICKSON
CALCULATED-DESIGNED BY: MATTHEW CASLAVKA
CHECKED BY
REVISED BY
DATE REVISED

LAST REVISION 00-00-00
DATE PLOTTED => 30-MAY-2012
TIME PLOTTED => 13:24

Dist	COUNTY	ROUTE	POST MILES TOTAL PROJECT	SHEET No.	TOTAL SHEETS
12	Ora	405	5.0/5.6	58	92

Vanessa Van Truong 05-10-12
REGISTERED ELECTRICAL ENGINEER DATE

5-29-12
PLANS APPROVAL DATE

REGISTERED PROFESSIONAL ENGINEER
V.V.TRUONG
No. E 13983
Exp.6/30/14
ELECTRICAL
STATE OF CALIFORNIA

THE STATE OF CALIFORNIA OR ITS OFFICERS OR AGENTS SHALL NOT BE RESPONSIBLE FOR THE ACCURACY OR COMPLETENESS OF SCANNED COPIES OF THIS PLAN SHEET.

NOTE:

FOR ACCURATE RIGHT OF WAY DATA, CONTACT
RIGHT OF WAY ENGINEERING AT THE DISTRICT OFFICE.

NOTES: (SHEET E-1 TO E-3)

1. TO EXISTING 240/480 V METERED SERVICE IN TYPE III-CF SERVICE EQUIPMENT ENCLOSURE AT SB ON-RAMP.
   2-30 A, 480 V, 2P, CB FOR LIGHTING AND SIGN.
2. INSTALL 2"C, 2#6 FOR LIGHTING AND SIGN.

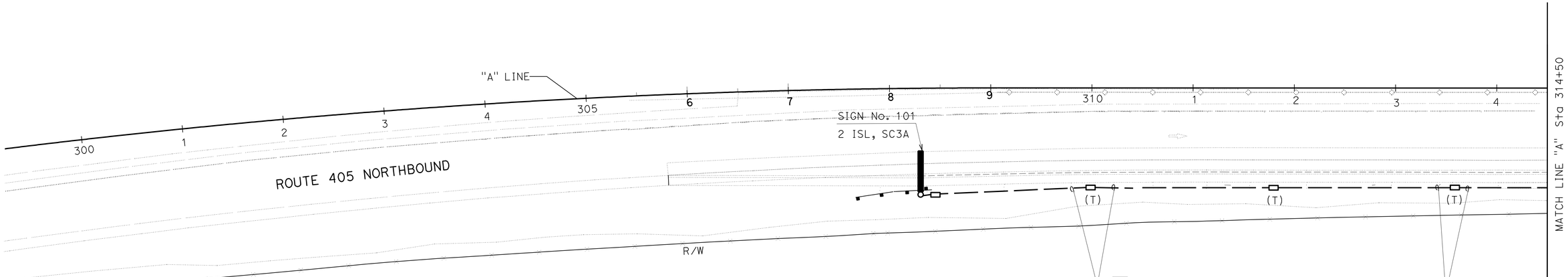

LIGHTING AND SIGN ILLUMINATION

SCALE: 1" = 50'

E-1

APPROVED FOR ELECTRICAL WORK ONLY

STATE OF CALIFORNIA - DEPARTMENT OF TRANSPORTATION
Caltrans® ELECTRICAL DESIGN

FUNCTIONAL SUPERVISOR: SHAHRAM SHAHRIARI
CALCULATED-DESIGNED BY: SOUDABEH AFRASIABI
CHECKED BY: VANESSA TRUONG
REVISED BY
DATE REVISED

LAST REVISION 05-08-12
DATE PLOTTED => 30-MAY-2012
TIME PLOTTED => 13:35

Dist	COUNTY	ROUTE	POST MILES TOTAL PROJECT	SHEET No.	TOTAL SHEETS
12	Ora	405	5.0/5.6	59	92

Vanessa Van Truong 05-10-12
REGISTERED ELECTRICAL ENGINEER DATE

5-29-12
PLANS APPROVAL DATE

REGISTERED PROFESSIONAL ENGINEER
V.V.TRUONG
No. E 13983
Exp.6/30/14
ELECTRICAL
STATE OF CALIFORNIA

THE STATE OF CALIFORNIA OR ITS OFFICERS OR AGENTS SHALL NOT BE RESPONSIBLE FOR THE ACCURACY OR COMPLETENESS OF SCANNED COPIES OF THIS PLAN SHEET.

NOTE:

FOR ACCURATE RIGHT OF WAY DATA, CONTACT RIGHT OF WAY ENGINEERING AT THE DISTRICT OFFICE.

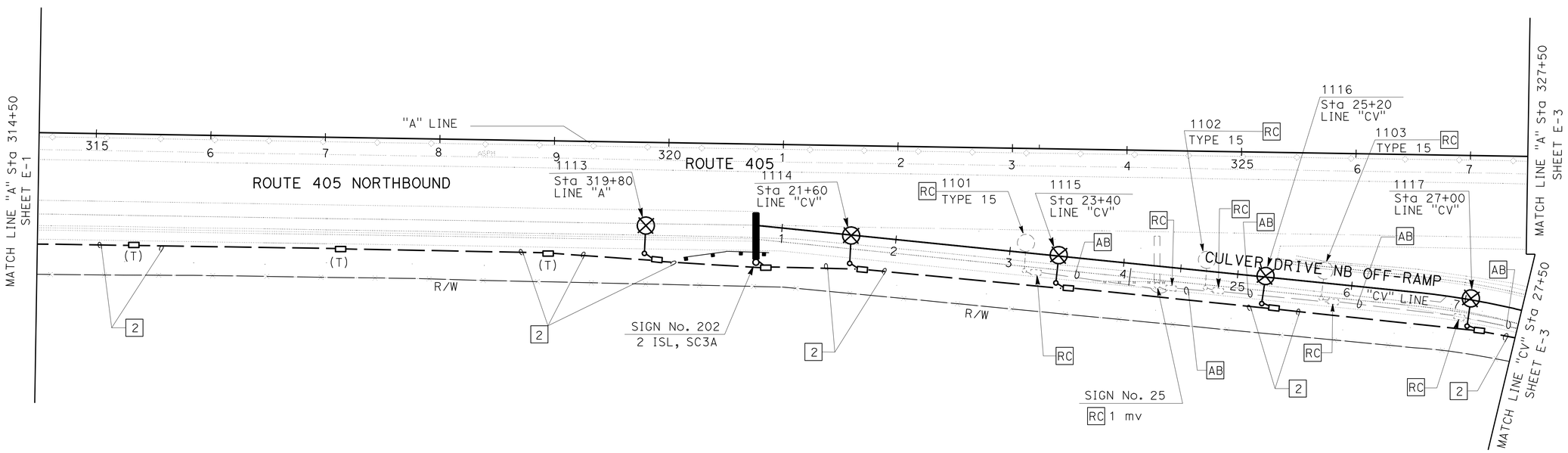

SEE SHEET E-1 FOR NOTES

APPROVED FOR ELECTRICAL WORK ONLY

LIGHTING AND SIGN ILLUMINATION

SCALE: 1" = 50'

E-2

STATE OF CALIFORNIA - DEPARTMENT OF TRANSPORTATION
Caltrans® ELECTRICAL DESIGN

FUNCTIONAL SUPERVISOR: SHAHRAM SHAHRIARI

CALCULATED-DESIGNED BY: SOUDABEH AFRASIABI
CHECKED BY: VANESSA TRUONG

REVISED BY
DATE REVISED

LAST REVISION 05-08-12
DATE PLOTTED => 01-JUN-2012
TIME PLOTTED => 08:47

Dist	COUNTY	ROUTE	POST MILES TOTAL PROJECT	SHEET No.	TOTAL SHEETS
12	Ora	405	5.0/5.6	60	92

Vanessa Van Truong 05-10-12
REGISTERED ELECTRICAL ENGINEER DATE

5-29-12
PLANS APPROVAL DATE

REGISTERED PROFESSIONAL ENGINEER
V.V.TRUONG
No. E 13983
Exp. 6/30/14
ELECTRICAL
STATE OF CALIFORNIA

THE STATE OF CALIFORNIA OR ITS OFFICERS OR AGENTS SHALL NOT BE RESPONSIBLE FOR THE ACCURACY OR COMPLETENESS OF SCANNED COPIES OF THIS PLAN SHEET.

NOTE:

FOR ACCURATE RIGHT OF WAY DATA, CONTACT RIGHT OF WAY ENGINEERING AT THE DISTRICT OFFICE.

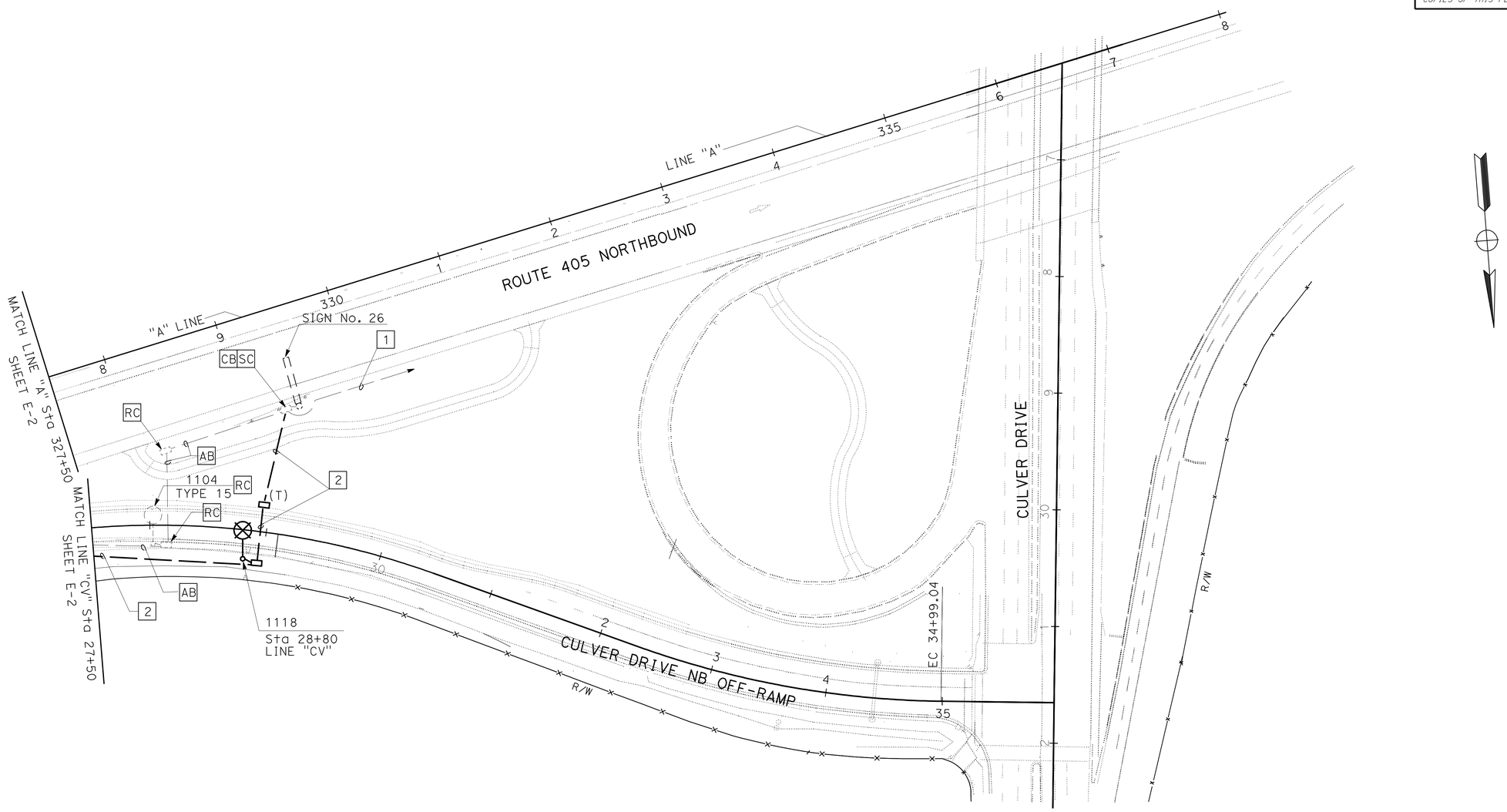

SEE SHEET E-1 FOR NOTES

APPROVED FOR ELECTRICAL WORK ONLY

LIGHTING AND SIGN ILLUMINATION

SCALE: 1" = 50'

E-3

STATE OF CALIFORNIA - DEPARTMENT OF TRANSPORTATION
Caltrans® **ELECTRICAL DESIGN**

FUNCTIONAL SUPERVISOR: SHAHRAM SHAHRIARI
CALCULATED-DESIGNED BY: SOUDABEH AFRASIABI
CHECKED BY: VANESSA TRUONG
REVISED BY
DATE REVISED

LAST REVISION 05-08-12
DATE PLOTTED => 30-MAY-2012
TIME PLOTTED => 13:35

Dist	COUNTY	ROUTE	POST MILES TOTAL PROJECT	SHEET No.	TOTAL SHEETS
12	Ora	405	5.0/5.6	61	92

Vanessa Van Truong 05-10-12
REGISTERED ELECTRICAL ENGINEER DATE

5-29-12
PLANS APPROVAL DATE

REGISTERED PROFESSIONAL ENGINEER V.V.TRUONG No. E 13983 Exp. 6/30/14 ELECTRICAL STATE OF CALIFORNIA

THE STATE OF CALIFORNIA OR ITS OFFICERS OR AGENTS SHALL NOT BE RESPONSIBLE FOR THE ACCURACY OR COMPLETENESS OF SCANNED COPIES OF THIS PLAN SHEET.

WIRING DIAGRAM (LEGEND)

- EXISTING LUMINAIRE
- EXISTING CONDUCTOR
- RC EXISTING CONDUCTOR
- EXISTING SIGN ILLUMINATION EQUIPMENT
- RC EXISTING SIGN ILLUMINATION EQUIPMENT
- RC EXISTING LUMINAIRE
- # 6 AWG CONDUCTOR
- INSTALL SIGN ILLUMINATION EQUIPMENT
- INSTALL 310 W HPS LUMINAIRE
- SPLICE CONDUCTOR

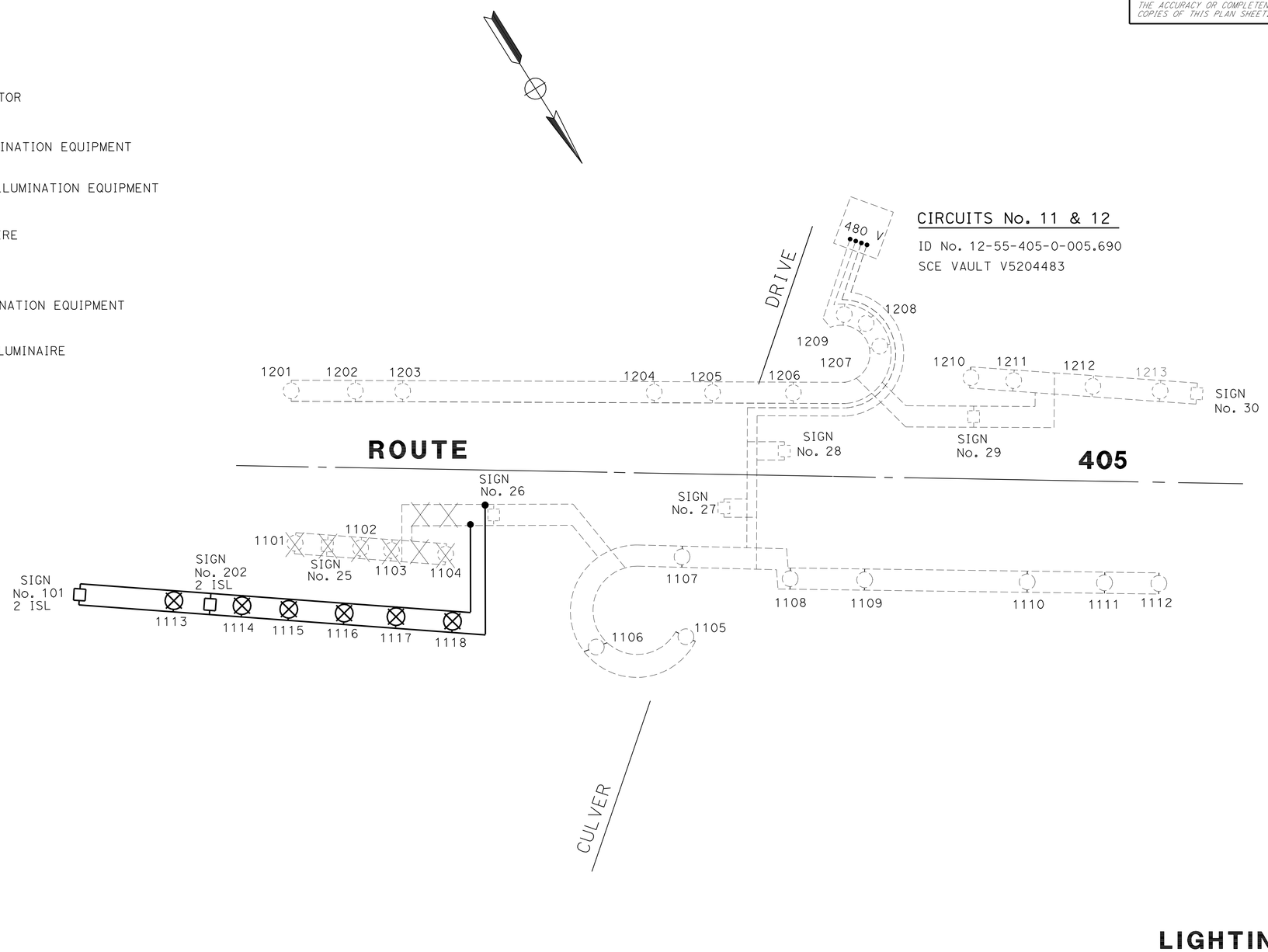

LIGHTING AND SIGN ILLUMINATION

(WIRING DIAGRAM)

NO SCALE

E-4

APPROVED FOR ELECTRICAL WORK ONLY

STATE OF CALIFORNIA - DEPARTMENT OF TRANSPORTATION
Caltrans® ELECTRICAL DESIGN

FUNCTIONAL SUPERVISOR: SHAHRAM SHAHRIARI

CALCULATED-DESIGNED BY: SOUDABEH AFRASIABI
CHECKED BY: VANESSA TRUONG

REVISED BY | DATE REVISED

LAST REVISION 05-08-12 | DATE PLOTTED => 30-MAY-2012 | TIME PLOTTED => 13:35

Dist	COUNTY	ROUTE	POST MILES TOTAL PROJECT	SHEET No.	TOTAL SHEETS
12	Ora	405	5.0/5.6	62	92

Vanessa Van Truong 05-10-12
REGISTERED ELECTRICAL ENGINEER DATE

5-29-12
PLANS APPROVAL DATE

REGISTERED PROFESSIONAL ENGINEER
V.V. TRUONG
No. E 13983
Exp. 6/30/14
ELECTRICAL
STATE OF CALIFORNIA

THE STATE OF CALIFORNIA OR ITS OFFICERS OR AGENTS SHALL NOT BE RESPONSIBLE FOR THE ACCURACY OR COMPLETENESS OF SCANNED COPIES OF THIS PLAN SHEET.

NOTE:

FOR ACCURATE RIGHT OF WAY DATA, CONTACT
RIGHT OF WAY ENGINEERING AT THE DISTRICT OFFICE.

NOTE: (THIS SHEET ONLY):

1 EXISTING 2"C, 1 dlc. RC 1 dlc.
INSTALL 2 DLC TO NB ON-RAMP
MODEL 170 CONTROLLER ASSEMBLY
APPROXIMATELY 2000'.

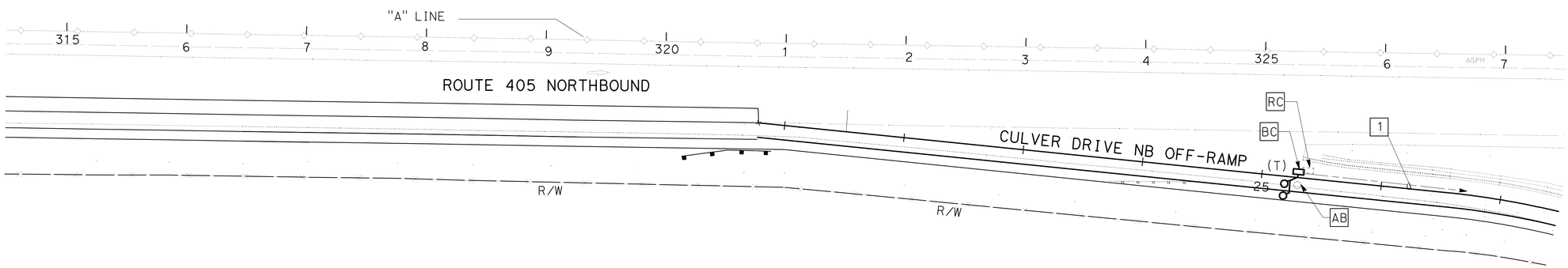

RAMP METERING SYSTEM

SCALE: 1" = 50'

APPROVED FOR ELECTRICAL WORK ONLY

E-5

STATE OF CALIFORNIA - DEPARTMENT OF TRANSPORTATION
Caltrans® **ELECTRICAL DESIGN**

FUNCTIONAL SUPERVISOR: SHAHRAM SHAHRIARI

CALCULATED-DESIGNED BY: SOUDABEH AFRASIABI
CHECKED BY: VANESSA TRUONG

REVISED BY
DATE REVISED

LAST REVISION 05-08-12 | DATE PLOTTED => 30-MAY-2012 | TIME PLOTTED => 13:35

BORDER LAST REVISED 7/2/2010 | USERNAME => s114640 | DGN FILE => 1200020298ua005.dgn | RELATIVE BORDER SCALE IS IN INCHES 0 1 2 3 | UNIT 3024 | PROJECT NUMBER & PHASE 12000202981

DIST	COUNTY	ROUTE	POST MILES TOTAL PROJECT	SHEET NO.	TOTAL SHEETS
12	Ora	405	5.0/5.6	63	92

REGISTERED CIVIL ENGINEER

April 20, 2012

PLANS APPROVAL DATE

REGISTERED PROFESSIONAL ENGINEER Roberta L. McLaughlin No. C40375 Exp. 3-31-13 CIVIL STATE OF CALIFORNIA

The State of California or its officers or agents shall not be responsible for the accuracy or completeness of electronic copies of this plan sheet.

To accompany plans dated 5-29-12

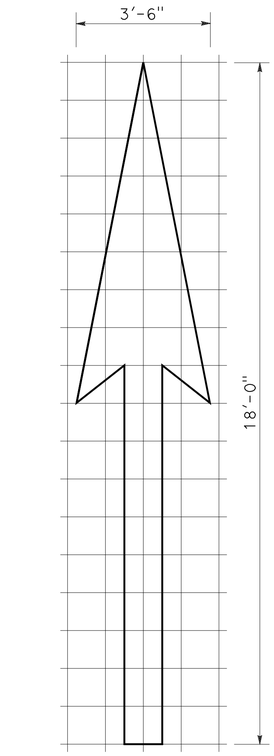

A=25 sq ft

TYPE I 18'-0" ARROW

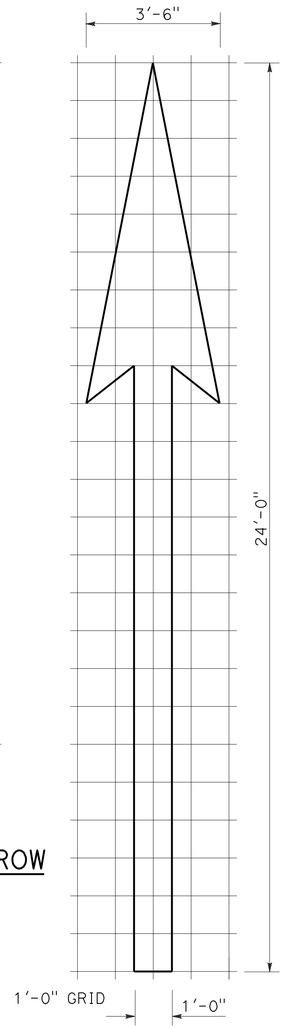

A=31 sq ft

TYPE I 24'-0" ARROW

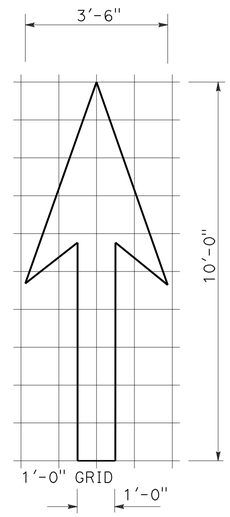

A=14 sq ft

TYPE I 10'-0" ARROW

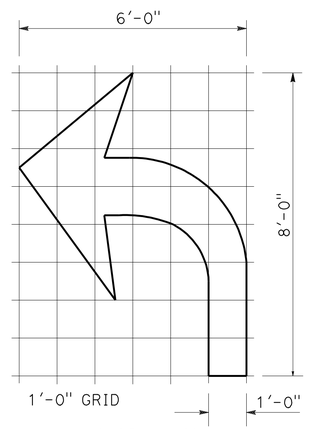

A=15 sq ft

TYPE IV (L) ARROW

(FOR TYPE IV (R) ARROW, USE MIRROR IMAGE)

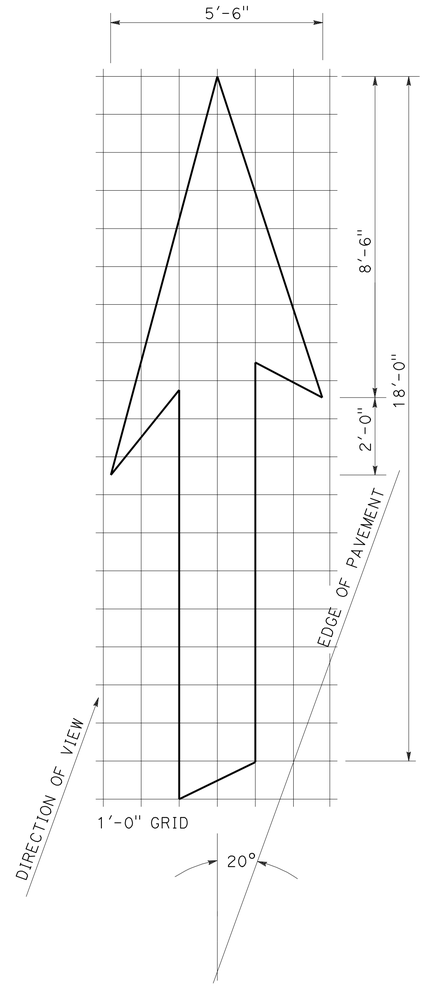

A=42 sq ft

TYPE VI ARROW

RIGHT LANE DROP ARROW (FOR LEFT LANE, USE MIRROR IMAGE)

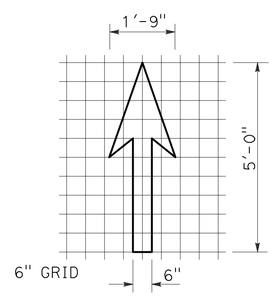

A=3.5 sq ft

BIKE LANE ARROW

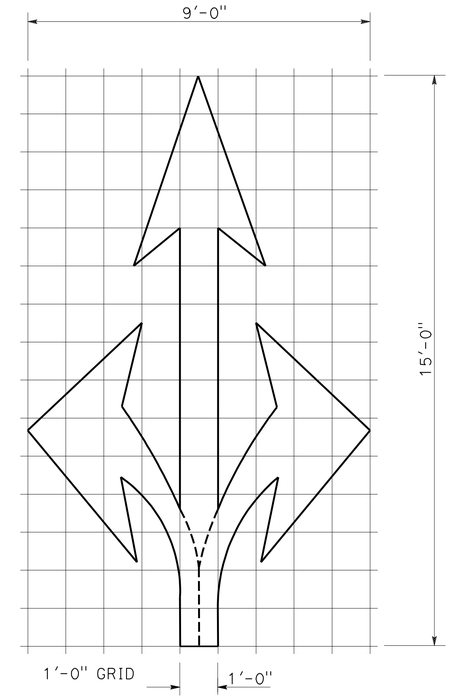

A=36 sq ft

TYPE VIII ARROW

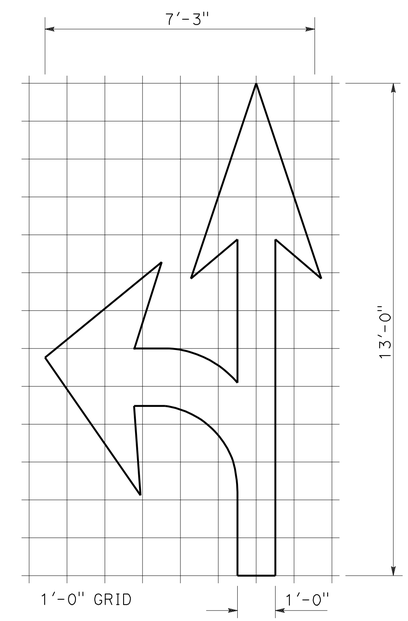

A=27 sq ft

TYPE VII (L) ARROW

(FOR TYPE VII (R) ARROW, USE MIRROR IMAGE)

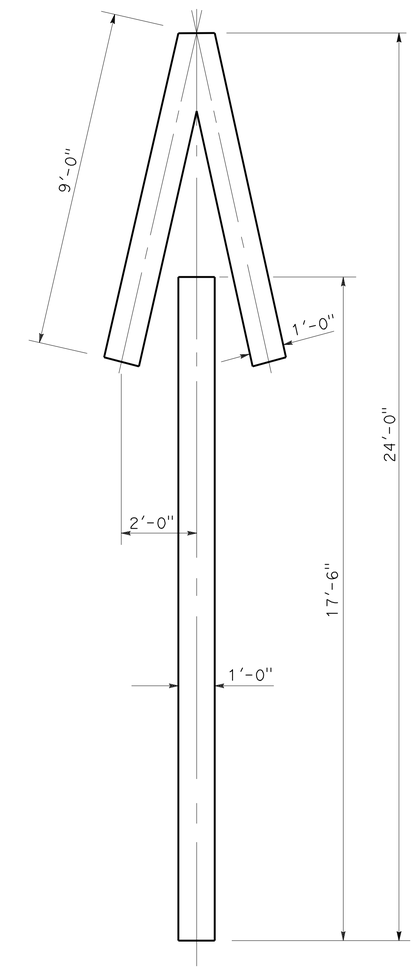

A=33 sq ft

TYPE V ARROW

NOTE:

MINOR VARIATIONS IN DIMENSIONS MAY BE ACCEPTED BY THE ENGINEER.

STATE OF CALIFORNIA
DEPARTMENT OF TRANSPORTATION

PAVEMENT MARKINGS ARROWS

NO SCALE

RSP A24A DATED APRIL 20, 2012 SUPERSEDES STANDARD PLAN A24A DATED MAY 1, 2006 - PAGE 9 OF THE STANDARD PLANS BOOK DATED MAY 2006.

REVISED STANDARD PLAN RSP A24A

2006 REVISED STANDARD PLAN RSP A24A

3-14-12

DIST	COUNTY	ROUTE	POST MILES TOTAL PROJECT	SHEET NO.	TOTAL SHEETS
12	Ora	405	5.0/5.6	64	92

REGISTERED CIVIL ENGINEER

June 6, 2008
PLANS APPROVAL DATE

REGISTERED PROFESSIONAL ENGINEER
Donald E. Howe
No. C46402
Exp. 3-31-09
CIVIL
STATE OF CALIFORNIA

The State of California or its officers or agents shall not be responsible for the accuracy or completeness of electronic copies of this plan sheet.

To accompany plans dated 5-29-12

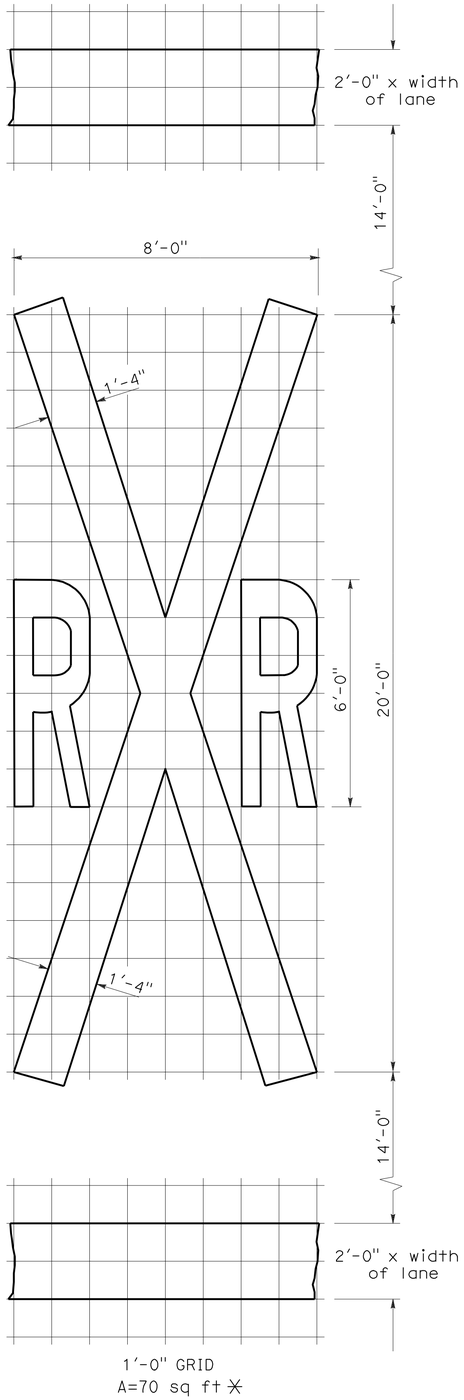

RAILROAD CROSSING SYMBOL

✳70 sq ft DOES NOT INCLUDE THE 2'-0" x VARIABLE WIDTH TRANSVERSE LINES.

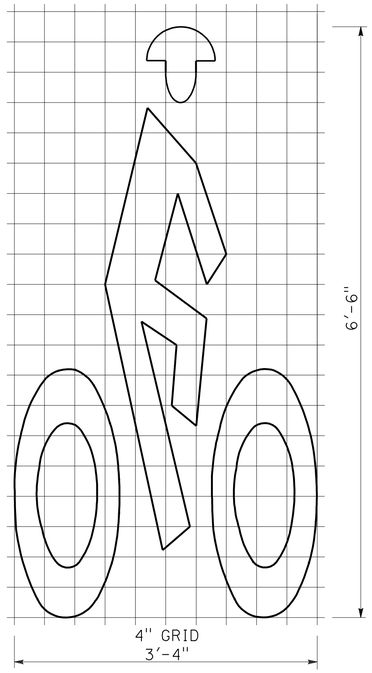

BIKE LANE SYMBOL

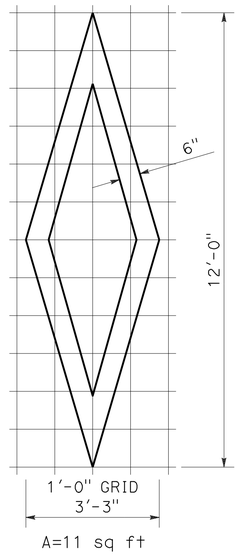

DIAMOND SYMBOL

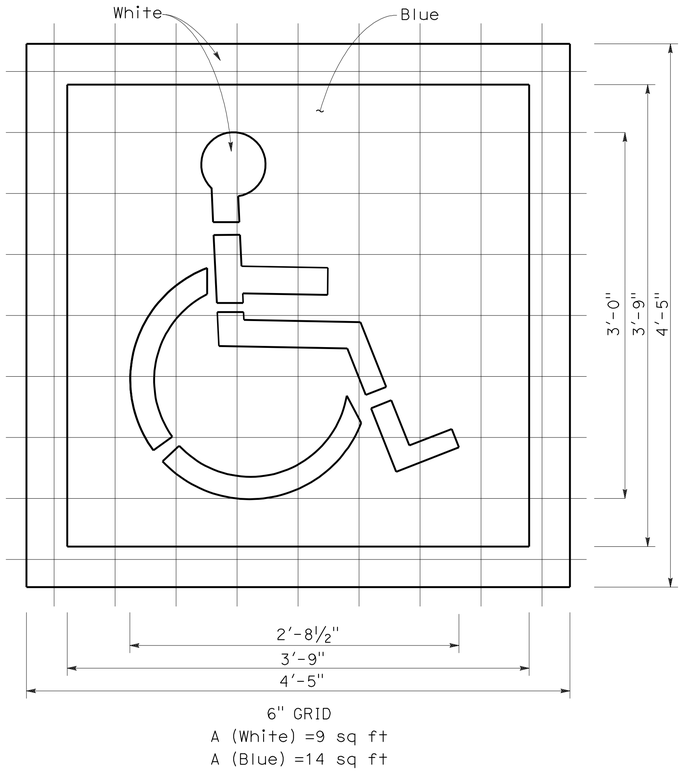

INTERNATIONAL SYMBOL OF ACCESSIBILITY MARKING

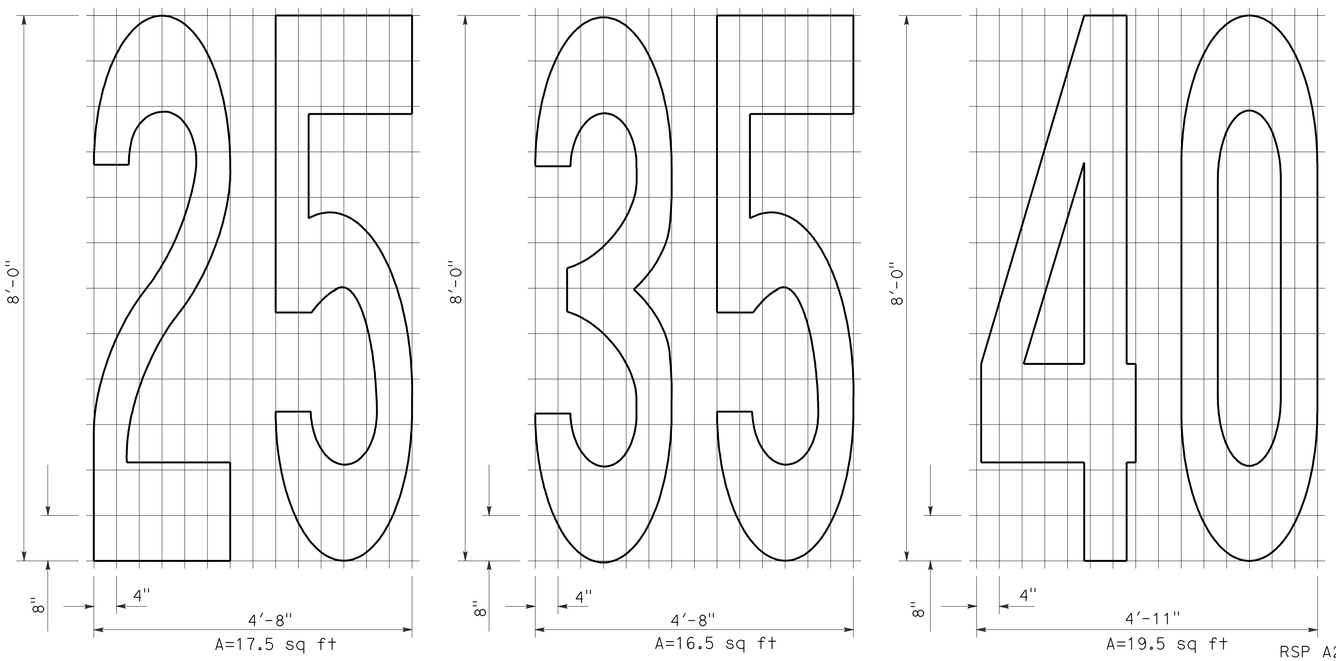

NUMERALS

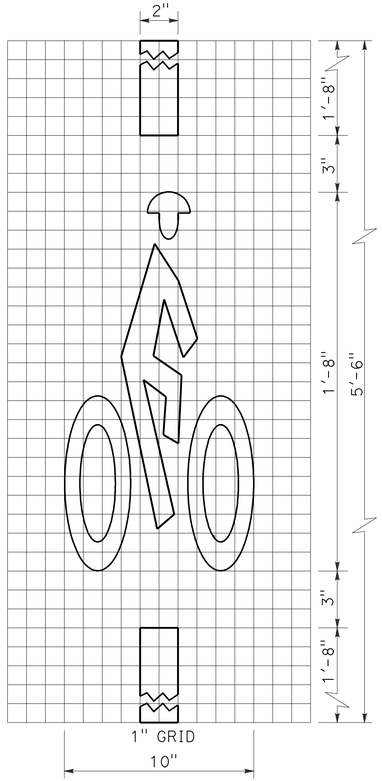

BICYCLE LOOP DETECTOR SYMBOL

NOTE:

1. Minor variations in dimensions may be accepted by the Engineer.

STATE OF CALIFORNIA
DEPARTMENT OF TRANSPORTATION

PAVEMENT MARKINGS SYMBOLS AND NUMERALS

NO SCALE

RSP A24C DATED JUNE 6, 2008 SUPERSEDES STANDARD PLAN A24C DATED MAY 1, 2006 - PAGE 11 OF THE STANDARD PLANS BOOK DATED MAY 2006.

REVISED STANDARD PLAN RSP A24C

2006 REVISED STANDARD PLAN RSP A24C

5-27-08

Dist	COUNTY	ROUTE	POST MILES TOTAL PROJECT	SHEET No.	TOTAL SHEETS
12	Ora	405	5.0/5.6	65	92

Randell D. Hiatt
REGISTERED CIVIL ENGINEER

May 20, 2011
PLANS APPROVAL DATE

REGISTERED PROFESSIONAL ENGINEER
Randell D. Hiatt
No. C50200
Exp. 6-30-11
CIVIL
STATE OF CALIFORNIA

The State of California or its officers or agents shall not be responsible for the accuracy or completeness of electronic copies of this plan sheet.

To accompany plans dated 5-29-12

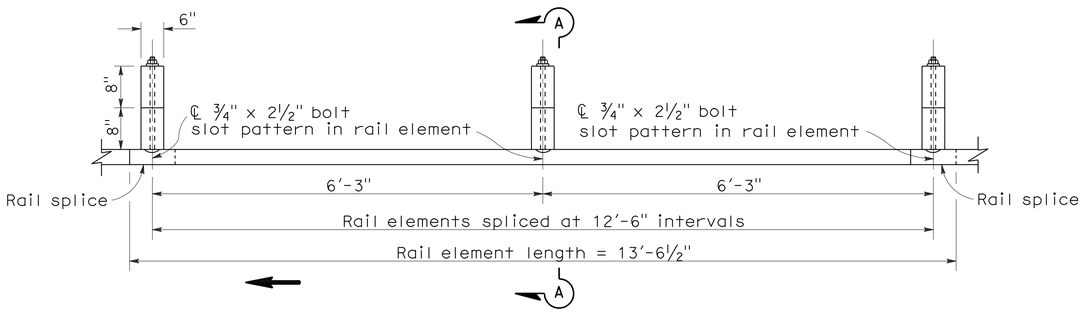

PLAN

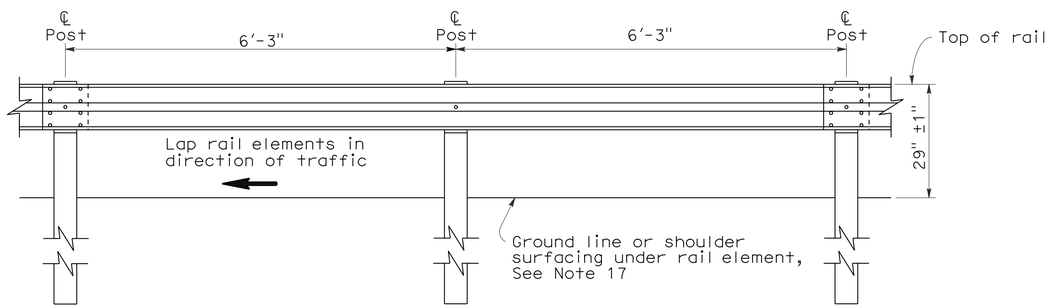

ELEVATION

METAL BEAM GUARD RAILING WITH WOOD POST AND BLOCKS

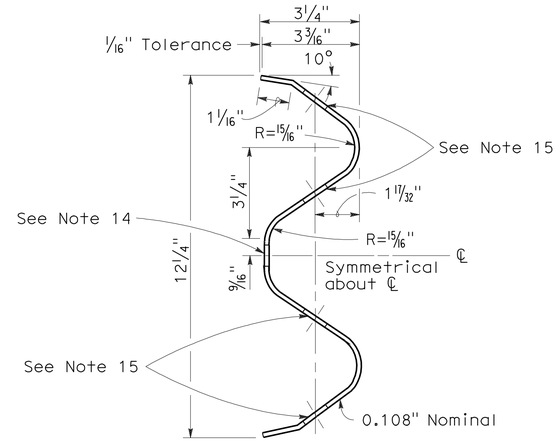

SECTION THRU RAIL ELEMENT

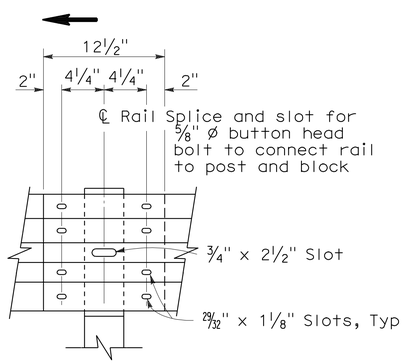

ELEVATION

RAIL ELEMENT SPLICE DETAIL

a) Connect the over lapped end of the rail elements with ⅝" ø x 1⅜" button head oval shoulder splice bolts inserted into the 29⁄32" x 1⅛" slots and bolted together with ⅝" ø recessed hex nuts. Recess of hex nut points toward rail element. A total of 8 bolts and nuts are to be used at each rail splice connection.

b) The ends of the rail elements are to be overlapped in the direction of traffic (see details).

c) Where end cap is to be attached to the end of a rail element, a total of 4 of the above described splice bolts and nuts are to be used.

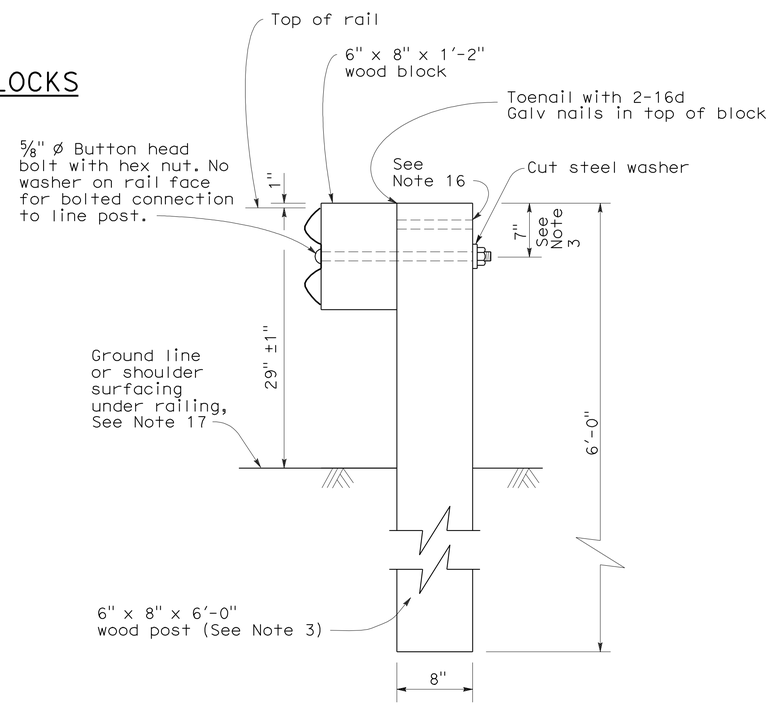

SECTION A-A

TYPICAL WOOD LINE POST INSTALLATION

See Note 4

NOTES:

1. For details of steel post installations, see Standard Plan A77A2.
2. For details of standard hardware used to construct guard railing, see Standard Plan A77B1.
3. For details of wood posts and wood blocks used to construct guard railing, see Standard Plan A77C1.
4. For additional installation details, see Standard Plan A77C3.
5. Guard railing post spacing to be 6'-3" center to center, except as otherwise noted.
6. For guard railing typical layouts, see the A77E, A77F and A77G Series of Standard Plans.
7. For terminal system end treatment details, see the A77L Series of Standard Plans. To connect railing to terminal system end treatment, transition the top of railing height at a ratio of 120:1 to terminal system end treatment height plus one 12'-6" standard railing section at the transitioned height for a horizontal connection to the end treatment.
8. For guard railing end anchor details, see Standard Plans A77H1 and A77I2.
9. For details of guard railing transition to bridge railing, see Standard Plan A77J4.
10. For additional details of guard railing connection to bridge railings, see Standard Plans A77J1, A77J2 and A77K1.
11. For guard railing connection details to abutments and walls, see Standard Plan A77J3.
12. Direction of adjacent traffic indicated by ➡.
13. For typical guard railing delineation and dike positioning details, see Standard Plan A77C4.
14. Slotted hole for bolted connection of rail element to block and post. See "Section Thru Rail Element".
15. Slotted holes for splice bolts to overlap ends of rail element. See "Section Thru Rail Element".
16. Additional hole in uppermost portion of line post is for potential future adjustments of railing height. See Standard Plan A77C1.
17. Install posts in soil.

STATE OF CALIFORNIA
DEPARTMENT OF TRANSPORTATION

METAL BEAM GUARD RAILING STANDARD RAILING SECTION (WOOD POST WITH WOOD BLOCK)

NO SCALE

RSP A77A1 DATED MAY 20, 2011 SUPERSEDES STANDARD PLAN A77A1 DATED MAY 1, 2006 - PAGE 41 OF THE STANDARD PLANS BOOK DATED MAY 2006.

REVISED STANDARD PLAN RSP A77A1

2006 REVISED STANDARD PLAN RSP A77A1

3-10-11

To accompany plans dated 5-29-12

Dist	COUNTY	ROUTE	POST MILES TOTAL PROJECT	SHEET No.	TOTAL SHEETS
12	Ora	405	5.0/5.6	66	92

Randell D. Hiatt
REGISTERED CIVIL ENGINEER

May 20, 2011
PLANS APPROVAL DATE

REGISTERED PROFESSIONAL ENGINEER
Randell D. Hiatt
No. C50200
Exp. 6-30-11
CIVIL
STATE OF CALIFORNIA

The State of California or its officers or agents shall not be responsible for the accuracy or completeness of electronic copies of this plan sheet.

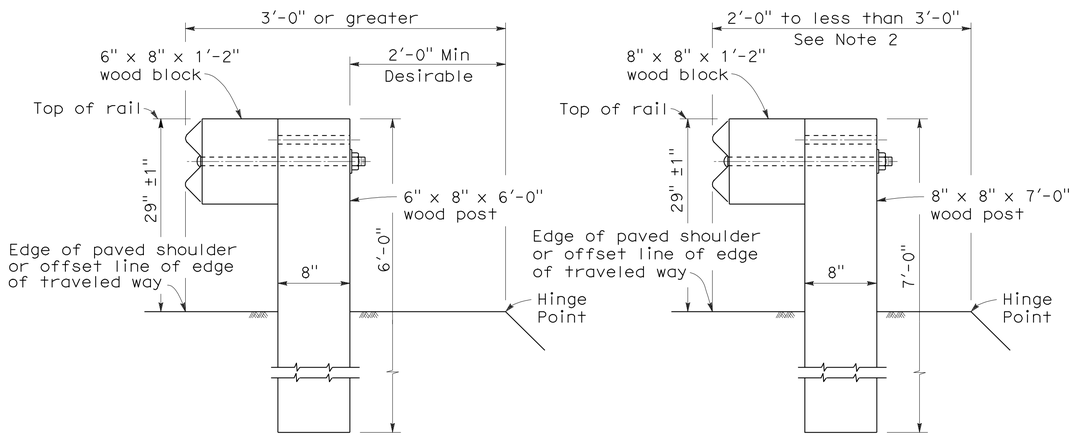

DETAIL A
TYPICAL ROADWAY INSTALLATION
See Note 1

DETAIL B
NARROW ROADWAY INSTALLATION
See Note 1

POST EMBEDMENT

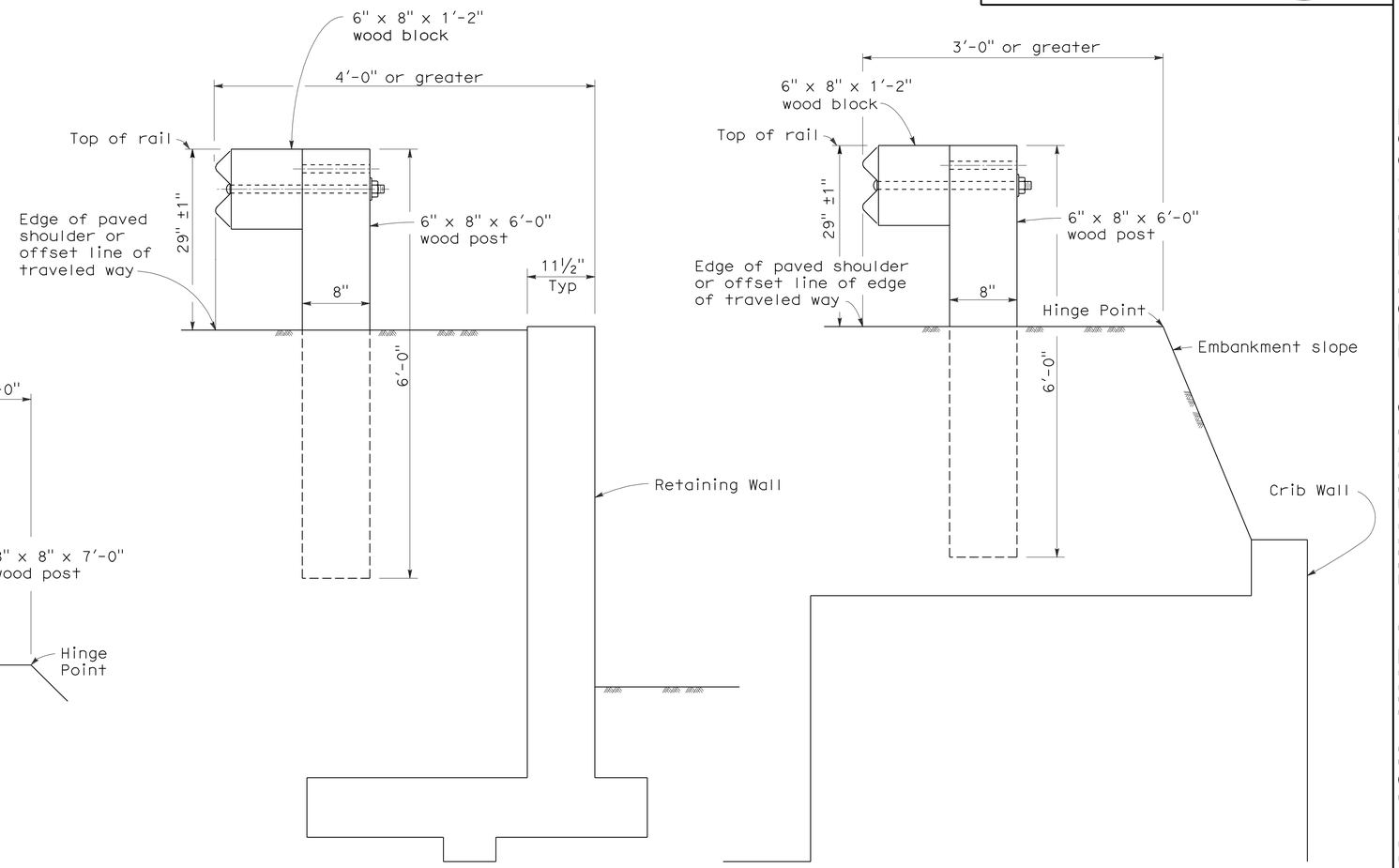

DETAIL C

DETAIL D

INSTALLATION AT EARTH RETAINING WALLS

NOTES:

1. These installation details also applicable to steel line post installations. For Detail A, C, and D, where steel line post installations are constructed, W6 x 9 steel post, 6'-0" in length, with 6" x 8" x 1'-2" notched wood blocks or notched recycled plastic blocks are to be used in place of the size of wood post and wood block shown. For Detail B, where steel line post installations are constructed, W6 x 9 steel post, 7'-0" in length, with 6" x 8" x 1'-2" notched wood blocks or notched recycled plastic blocks are to be used in place of the size of wood post and wood block shown. For additional installation details, see Standard Plans A77A1 and A77A2.
2. Where the distance between the face of the rail and the hinge point is less than 2'-0", see the Project Plans for special details.
3. For dike positioning with guard railing installations, see Standard Plan A77C4.

STATE OF CALIFORNIA
DEPARTMENT OF TRANSPORTATION

METAL BEAM GUARD RAILING TYPICAL LINE POST EMBEDMENT AND HINGE POINT OFFSET DETAILS

NO SCALE

RSP A77C3 DATED MAY 20, 2011 SUPERSEDES STANDARD PLAN A77C3
DATED MAY 1, 2006 - PAGE 46 OF THE STANDARD PLANS BOOK DATED MAY 2006.

REVISED STANDARD PLAN RSP A77C3

2006 REVISED STANDARD PLAN RSP A77C3

3-10-11

Dist	COUNTY	ROUTE	POST MILES TOTAL PROJECT	SHEET No.	TOTAL SHEETS
12	Ora	405	5.0/5.6	67	92

Randell D. Hiatt
REGISTERED CIVIL ENGINEER

May 20, 2011
PLANS APPROVAL DATE

REGISTERED PROFESSIONAL ENGINEER
Randell D. Hiatt
No. C50200
Exp. 6-30-11
CIVIL
STATE OF CALIFORNIA

The State of California or its officers or agents shall not be responsible for the accuracy or completeness of electronic copies of this plan sheet.

To accompany plans dated 5-29-12

NOTES:

1. When necessary to place dike in front of face of guard railing, only Type C dike may be used. For dike details, see Standard Plan A87B.
2. For standard railing post embedment, see Standard Plans A77C3.
3. Guard railing delineation to be used where shown on the Project Plans.
4. When dike or curb is placed under guard railing, the maximum height of the dike or curb shall be 4". Mountable dike should not be used. For dike and curb details, see Standard Plans A87A and A87B.
5. For details of typical distance between the face of rail and hinge point, see Standard Plan A77C3.
6. For steel line posts, use ¼ - 20 self-tapping screws in 0.22" diameter holes or ¼" bolts in 9/32" diameter holes.

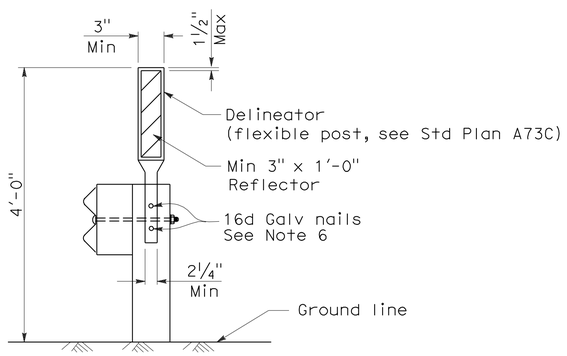

GUARD RAILING DELINEATION

See Note 3

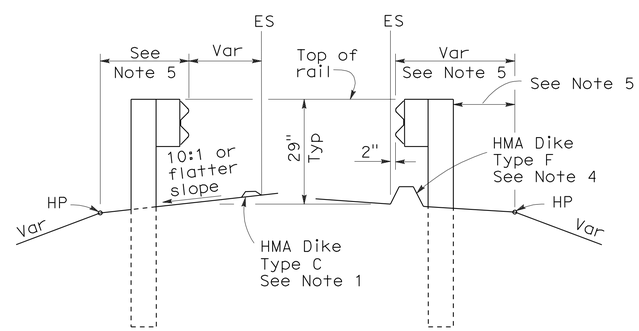

DIKE POSITIONING

See Note 1

STATE OF CALIFORNIA
DEPARTMENT OF TRANSPORTATION

METAL BEAM GUARD RAILING TYPICAL RAILING DELINEATION AND DIKE POSITIONING DETAILS

NO SCALE

RSP A77C4 DATED MAY 20, 2011 SUPERSEDES RSP A77C4 DATED JUNE 6, 2008 AND STANDARD PLAN A77C4 DATED MAY 1, 2006 - PAGE 47 OF THE STANDARD PLANS BOOK DATED MAY 2006.

REVISED STANDARD PLAN RSP A77C4

2006 REVISED STANDARD PLAN RSP A77C4

3-10-11

DIST	COUNTY	ROUTE	POST MILES TOTAL PROJECT	SHEET NO.	TOTAL SHEETS
12	Ora	405	5.0/5.6	68	92

Randell D. Hiatt
REGISTERED CIVIL ENGINEER

June 6, 2008
PLANS APPROVAL DATE

REGISTERED PROFESSIONAL ENGINEER
Randell D. Hiatt
No. C50200
Exp. 6-30-09
CIVIL
STATE OF CALIFORNIA

The State of California or its officers or agents shall not be responsible for the accuracy or completeness of electronic copies of this plan sheet.

To accompany plans dated 5-29-12

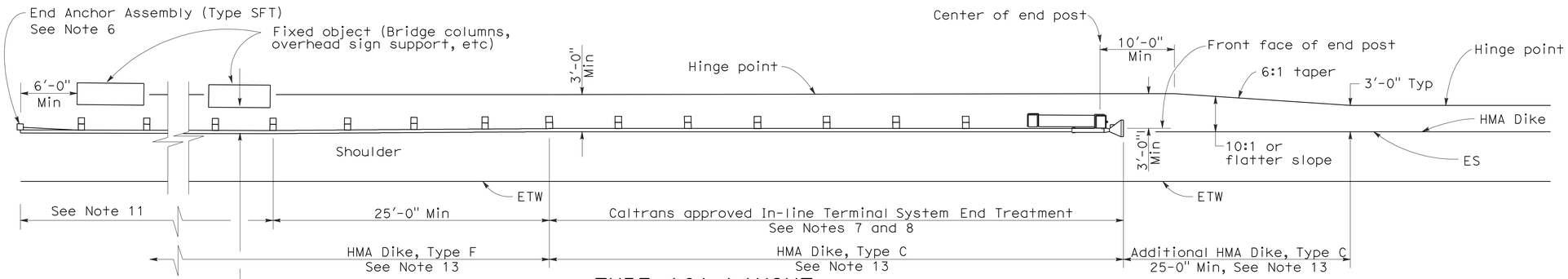

TYPE 16A LAYOUT

(GUARD RAILING INSTALLATION AT ROADSIDE FIXED OBJECT OR OBJECTS WITH AN IN-LINE END TREATMENT AT TRAFFIC APPROACH END OF RAILING)
See Notes 12 and 13

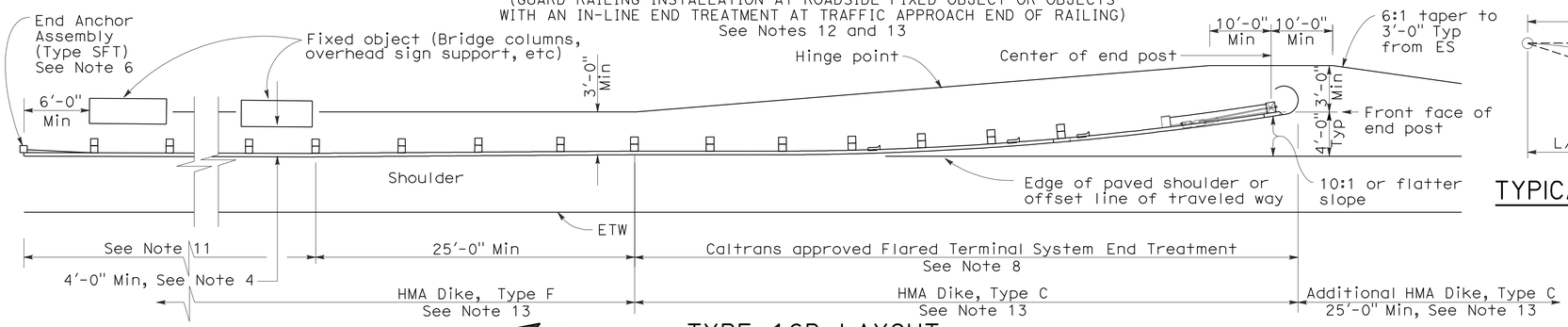

TYPE 16B LAYOUT

(GUARD RAILING INSTALLATION AT ROADSIDE FIXED OBJECT OR OBJECTS WITH A FLARED END TREATMENT AT TRAFFIC APPROACH END OF RAILING)
See Notes 12 and 13

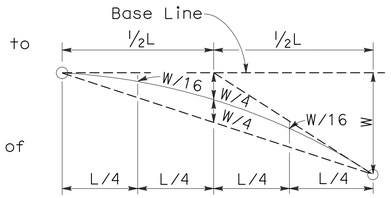

TYPICAL PARABOLIC LAYOUT

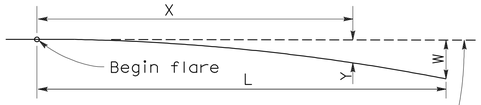

Base Line (Edge of paved shoulder or offset line of edge of traveled way)

$$Y = \frac{WX^2}{L^2}$$

Y = Offset from base line
W = Maximum offset
X = Distance along base line
L = Length of flare

PARABOLIC FLARE OFFSETS

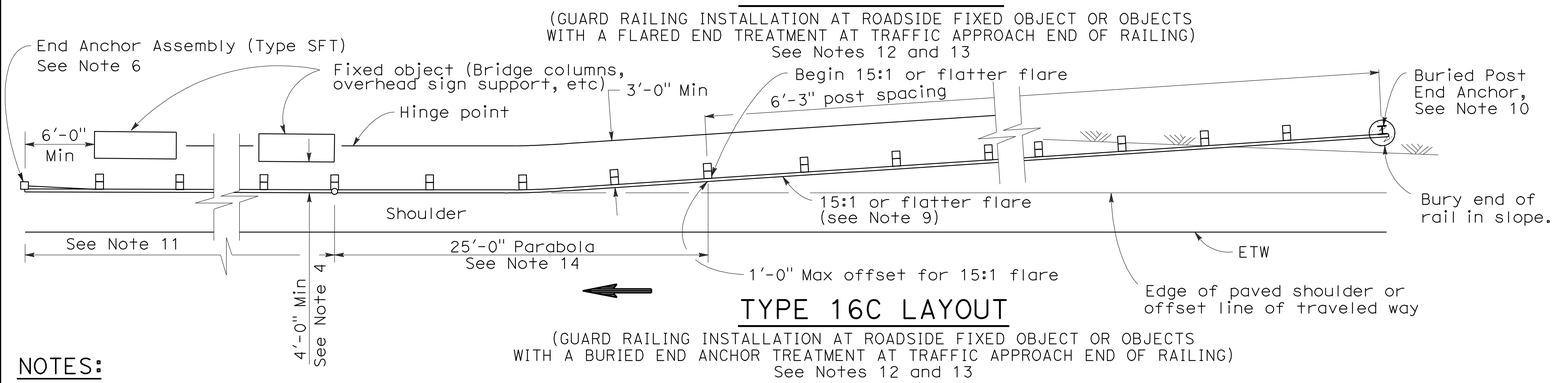

TYPE 16C LAYOUT

(GUARD RAILING INSTALLATION AT ROADSIDE FIXED OBJECT OR OBJECTS WITH A BURIED END ANCHOR TREATMENT AT TRAFFIC APPROACH END OF RAILING)
See Notes 12 and 13

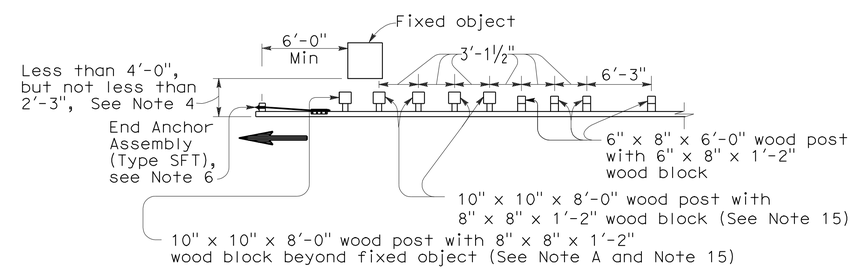

NOTE A: For a series of fixed objects (bridge columns, overhead sign supports, etc.) additional 10" x 10" x 8'-0" wood post with 8" x 8" x 1'-2" wood blocks at 3'-1½" center to center spacing are to be used between fixed objects.

STRENGTHENED RAILING SECTIONS FOR FIXED OBJECT

Use strengthened railing sections with Types 16A, 16B or 16C Layouts where minimum clearance between the face of the guard railing and fixed object(s) is less than 4'-0", but not less than 2'-3". See Note 4

NOTES:

1. Line post, blocks and hardware to be used are shown on Revised Standard Plans A77A1, A77A2, A77B1, A77C1 and A77C2.
2. Guard railing post spacing to be 6'-3" center to center, except as otherwise noted.
3. Except as noted, line posts are 6" x 8" x 6'-0" wood with 6" x 8" x 1'-2" wood blocks. W6 x 9 steel posts, 6'-0" in length, with 6" x 8" x 1'-2" notched wood blocks or notched recycled plastic blocks may be used for 6" x 8" x 6'-0" wood line posts with 6" x 8" x 1'-2" wood blocks where applicable and when specified.
4. A 4'-0" minimum clearance is required between the face of the railing and the face of a fixed object located directly behind standard guard railing sections with post spacing of 6'-3". Construct guard railing as shown in the detail "Strengthened Railing Sections for Fixed Objects" on this plan, where the clearance between the face of the railing and the face of a fixed object is less than 4'-0", but not less than 2'-3". Where the clearance is less than 2'-3", a concrete wall or barrier should be constructed to shield the fixed object(s).
5. Direction of adjacent traffic indicated by ⟶.
6. For End Anchor Assembly (Type SFT) details, see Standard Plan A77H1.
7. In-line Terminal System End Treatments are used where site conditions will not accommodate a flared end treatment.
8. The type of terminal system to be used will be shown on the Project Plans.
9. The 15:1 or flatter flare used with Type 16C Layout is based on the edge of the paved shoulder or offset line of edge of the traveled way. The length of guard railing within the 15:1 or flatter flare is based on site conditions and should be a length equal to multiples of 12'-6".
10. For details of the Buried Post End Anchor used with Type 16C Layout, see Standard Plan A77I2.
11. As site conditions dictate, construct additional guard railing to shield fixed object(s). Additional guard railing length equal to multiples of 12'-6". Post spacing at 6'-3" except as specified in Note 4.
12. Layout Types 16A, 16B or 16C are typically used where guard railing is recommended to shield roadside fixed object(s) and a crashworthy end treatment is required for only one direction of traffic.
13. Where placement of dike is required with guard railing, see Revised Standard Plan RSP A77C4 for dike positioning details.
14. For typical flare offsets for 25'-0" length parabola with maximum offset of 1'-0", see Revised Standard Plan RSP A77E1.
15. W6 x 15 steel post, 8'-0" in length, with 8" x 8" x 1'-2" notched wood block or notched recycled plastic blocks may be used in place of the 10" x 10" x 8'-0" wood post with 8" x 8" x 1'-2" wood block shown in the "Strengthened Railing Sections Detail".

STATE OF CALIFORNIA
DEPARTMENT OF TRANSPORTATION

METAL BEAM GUARD RAILING TYPICAL LAYOUTS FOR ROADSIDE FIXED OBJECTS

NO SCALE

RSP A77G3 DATED JUNE 6, 2008 SUPERSEDES STANDARD PLAN A77G3 DATED MAY 1, 2006 - PAGE 61 OF THE STANDARD PLANS BOOK DATED MAY 2006.

REVISED STANDARD PLAN RSP A77G3

2006 REVISED STANDARD PLAN RSP A77G3

12-10-07

Dist	COUNTY	ROUTE	POST MILES TOTAL PROJECT	SHEET No.	TOTAL SHEETS
12	Ora	405	5.0/5.6	69	92

Randell D. Hiatt
REGISTERED CIVIL ENGINEER

May 20, 2011
PLANS APPROVAL DATE

REGISTERED PROFESSIONAL ENGINEER
Randell D. Hiatt
No. C50200
Exp. 6-30-11
CIVIL
STATE OF CALIFORNIA

The State of California or its officers or agents shall not be responsible for the accuracy or completeness of electronic copies of this plan sheet.

To accompany plans dated 5-29-12

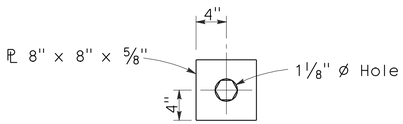

DETAIL A
CABLE CONNECTION
END PLATE

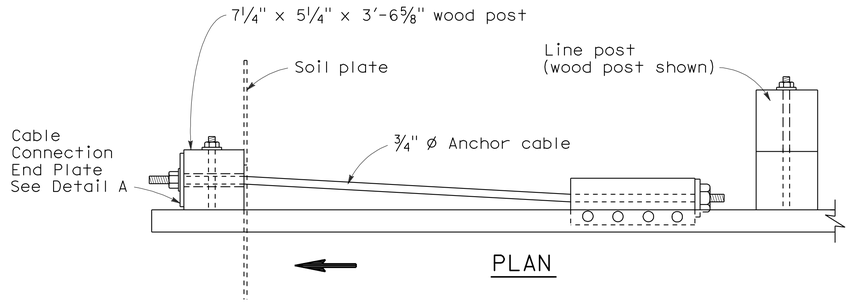

PLAN

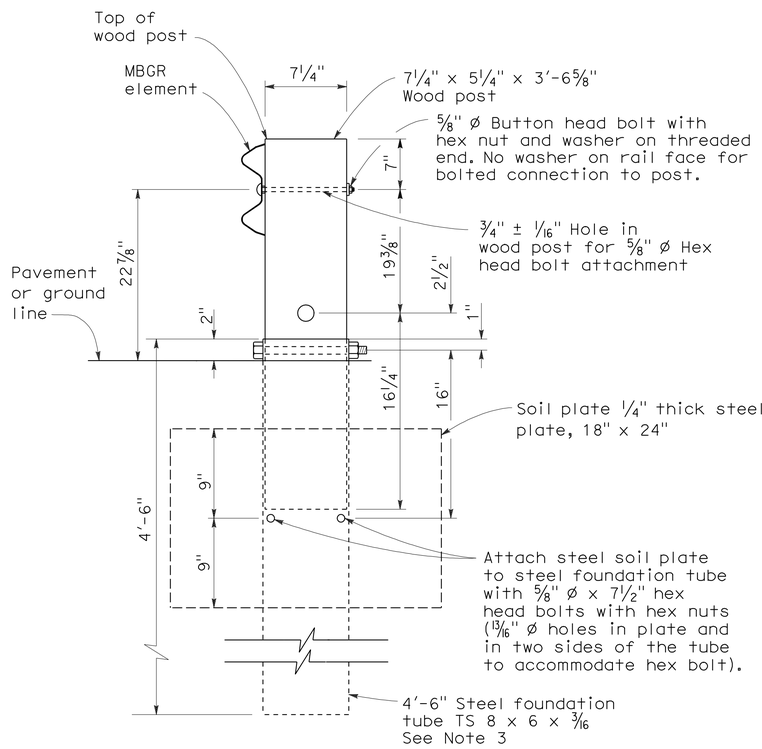

SECTION A-A

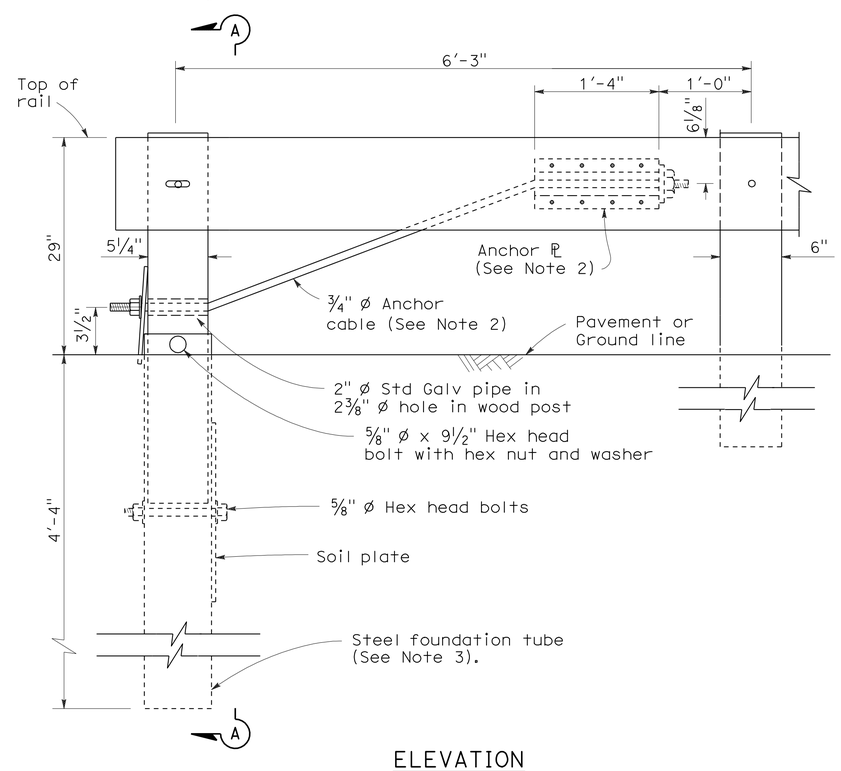

ELEVATION
END ANCHOR
ASSEMBLY (TYPE SFT)
See Note 1

NOTES:

1. See the A77E, A77F and A77G series of Standard Plans for typical use of End Anchor Assembly (Type SFT).
2. For details of the anchor plate and 3/4" cable, see Standard Plan A77H3.
3. A 6'-0" length steel foundation tube, TS 8 x 6 x 3/16, without a soil plate, may be furnished and installed in place of the 4'-6" length steel foundation tube and soil plate shown. Minimum embedment of the 6'-0" length tube shall be 5'-9". A 5/8" ø hex head bolt and nut shall be installed in the hole in the 6'-0" length tube to keep the wood post from dropping into the tube.
4. Direction of traffic indicated by ⟹.
5. Install line post, steel foundation tube and soil plate in soil.

STATE OF CALIFORNIA
DEPARTMENT OF TRANSPORTATION

METAL RAILING END ANCHOR ASSEMBLY (TYPE SFT)

NO SCALE

RSP A77H1 DATED MAY 20, 2011 SUPERSEDES STANDARD PLAN A77H1
DATED MAY 1, 2006 - PAGE 67 OF THE STANDARD PLANS BOOK DATED MAY 2006.

REVISED STANDARD PLAN RSP A77H1

2006 REVISED STANDARD PLAN RSP A77H1

2-10-07

DIST	COUNTY	ROUTE	POST MILES TOTAL PROJECT	SHEET NO.	TOTAL SHEETS
12	Ora	405	5.0/5.6	70	92

REGISTERED CIVIL ENGINEER

November 17, 2006
PLANS APPROVAL DATE

REGISTERED PROFESSIONAL ENGINEER
Michael Janzen
No. 44788
Exp. 03-31-08
CIVIL
STATE OF CALIFORNIA

The State of California or its officers or agents shall not be responsible for the accuracy or completeness of electronic copies of this plan sheet.

To accompany plans dated 5-29-12

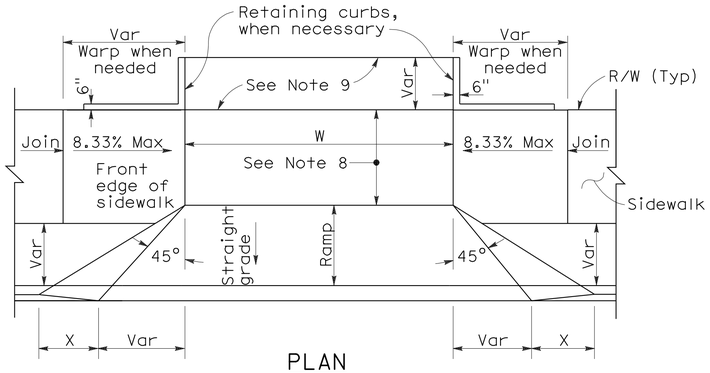

PLAN

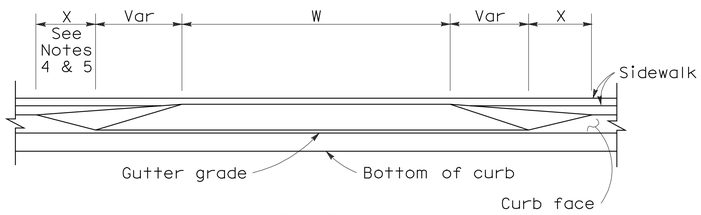

ELEVATION

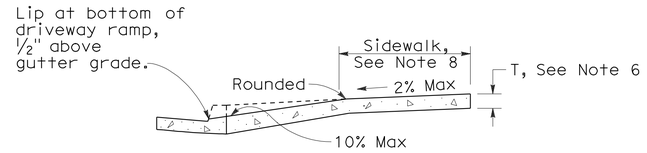

CASE A

Typical driveway, sidewalk not depressed

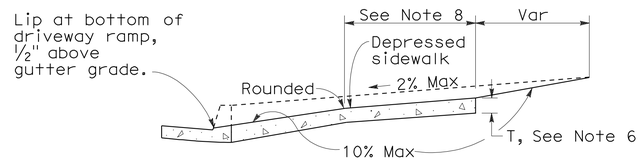

CASE B

Driveway with depressed sidewalk

SECTIONS

DRIVEWAYS

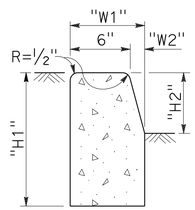

TYPE A1 CURBS

See Table A

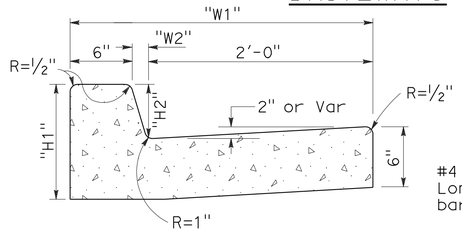

TYPE A2 CURBS

See Table A

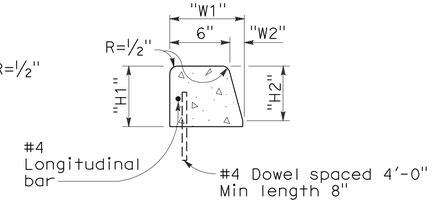

TYPE A3 CURBS

Superimposed on existing pavement
See Table A

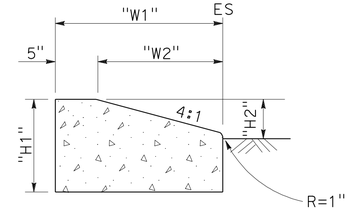

TYPE D CURBS

See Table A

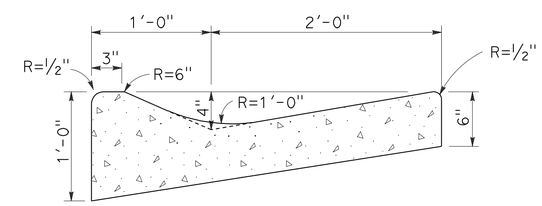

TYPE E CURB

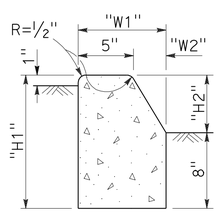

TYPE B1 CURBS

See Table A

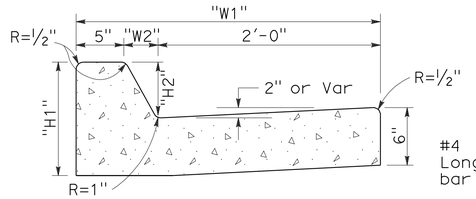

TYPE B2 CURBS

See Table A

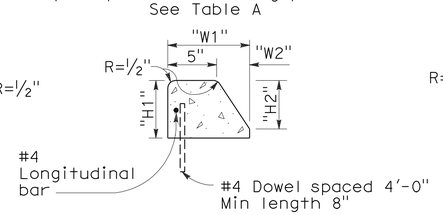

TYPE B3 CURBS

Superimposed on existing pavement
See Table A

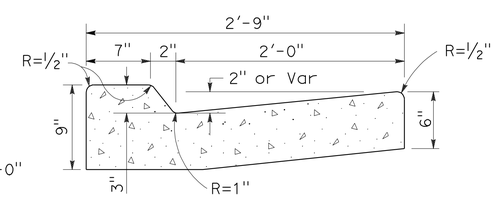

TYPE B4 CURBS

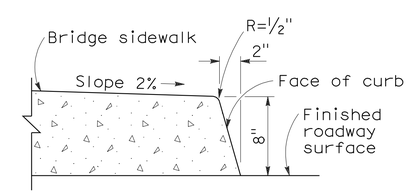

TYPE H CURB

On Bridges

CURBS

CURB QUANTITIES

TYPE	CUBIC YARDS PER LINEAR FOOT
A1-6	0.02585
A1-8	0.03084
A2-6	0.05903
A2-8	0.06379
A3-6	0.01036
A3-8	0.01435
B1-4	0.02185
B1-6	0.02930
B2-4	0.05515
B2-6	0.06171
B3-4	0.00641
B3-6	0.01074
B4	0.05709
D-4	0.04083
D-6	0.06804
E	0.06661

TABLE A

CURB TYPE	DIMENSIONS "H1"	"H2"	"W1"	"W2"
A1-6	1'-2"	6"	7½"	1½"
A1-8	1'-4"	8"	8"	2"
A2-6	1'-0"	6"	2'-7½"	1½"
A2-8	1'-2"	8"	2'-8"	2"
A3-6	6"	5"	7¼"	1¼"
A3-8	8"	7"	7¾"	1¾"
B1-4	1'-0"	4"	7½"	2½"
B1-6	1'-2"	6"	9"	4"
B2-4	10"	4"	2'-7½"	2½"
B2-6	1'-0"	6"	2'-9"	4"
B3-4	4"	3"	7"	2"
B3-6	6"	5"	8½"	3½"
D-4	10"	4"	1'-6"	1'-1"
D-6	1'-0"	6"	2'-2"	1'-8"

NOTES:

1. Case A driveway section typically applies.
2. Use Case B driveway section when ramp slopes would exceed 10% in Case A.
3. Use Case B driveway section when sidewalk cross slope would exceed 2% in Case A.
4. X=3'-0" except for curb heights over 10" where 4:1 slopes shall be used on curb slope.
5. X is a variable when sidewalk is located where wheelchairs may traverse the surface. Slopes shall not exceed 8.33%.
6. Sidewalk and ramp thickness "T" at driveway shall be 4" for residental and 6" for commercial.
7. Difference in slope of the driveway ramp and the slope of a line between the gutter and a point on the roadway 5'-0" from gutter line shall not exceed 15%. Reduce driveway ramp slope, not gutter slope, where required.
8. Minimum width of clear passageway for sidewalk shall be 4'-0".
9. Retaining curbs and acquisition of construction easement may be necessary for narrow sidewalks or curb heights in excess of 6".
10. Across the pedestrian route at curb ramp locations, the gutter pan slope shall not exceed 1" of depth for each 2'-0" of width.

STATE OF CALIFORNIA
DEPARTMENT OF TRANSPORTATION

CURBS AND DRIVEWAYS

NO SCALE

RSP A87A DATED NOVEMBER 17, 2006 SUPERSEDES STANDARD PLAN A87A DATED MAY 1, 2006 - PAGE 113 OF THE STANDARD PLANS BOOK DATED MAY 2006.

REVISED STANDARD PLAN RSP A87A

2006 REVISED STANDARD PLAN RSP A87A

10-25-06

DIST	COUNTY	ROUTE	POST MILES TOTAL PROJECT	SHEET NO.	TOTAL SHEETS
12	Ora	405	5.0/5.6	71	92

William K. Farnbach
REGISTERED CIVIL ENGINEER

May 15, 2009
PLANS APPROVAL DATE

REGISTERED PROFESSIONAL ENGINEER
William K. Farnbach
No. C49042
Exp. 9-30-10
CIVIL
STATE OF CALIFORNIA

The State of California or its officers or agents shall not be responsible for the accuracy or completeness of electronic copies of this plan sheet.

To accompany plans dated 5-29-12

2006 REVISED STANDARD PLAN RSP P1

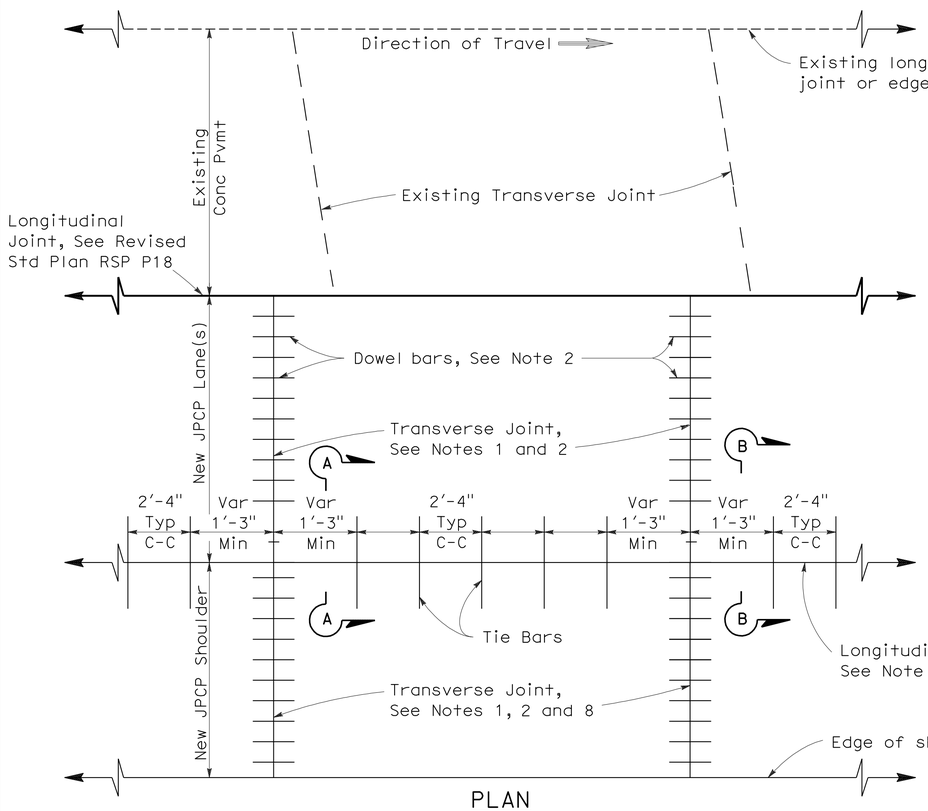

PLAN

LANE/SHOULDER ADDITION OR RECONSTRUCTION

See Notes 6 and 7

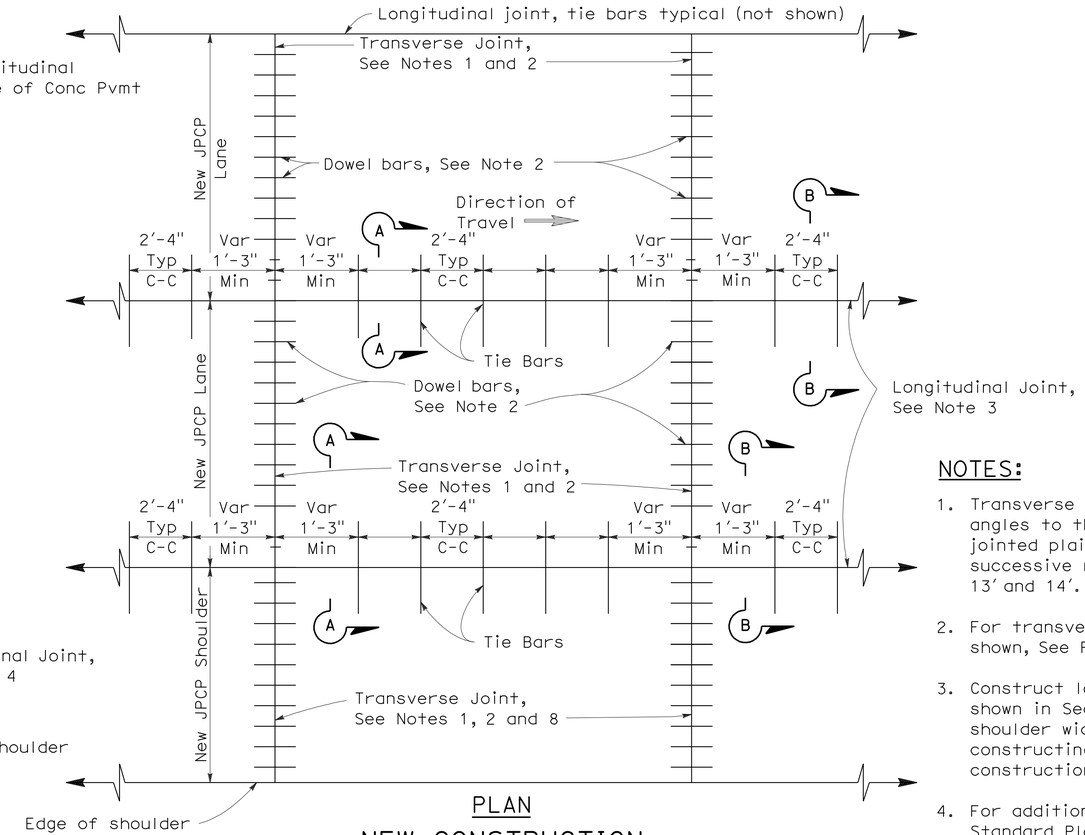

PLAN

NEW CONSTRUCTION

See Notes 6 and 7

NOTES:

1. Transverse joints shall be constructed at right angles to the longitudinal pavement joints in new jointed plain concrete pavement and spaced at successive repeated intervals of 12', 15', 13' and 14'.
2. For transverse joint and dowel bar details not shown, See Revised Standard Plan RSP P10.
3. Construct longitudinal contraction joints as shown in Section A-A when more than one lane or shoulder widths are placed at one time. If constructing one lane at a time, use longitudinal construction joint, as shown in Section B-B.
4. For additional longitudinal joint details, see Revised Standard Plan RSP P18.
5. If fresh concrete is placed adjacent to existing concrete, the top corner of the new hardened concrete does not need to be rounded to the 1/4" radius as shown.
6. Joint spacing patterns do not apply to intersections.
7. Details can also apply to inside widening.
8. Dowel bars may be omitted from shoulders when the shoulder cross slope is not the same as the adjacent traffic lane.

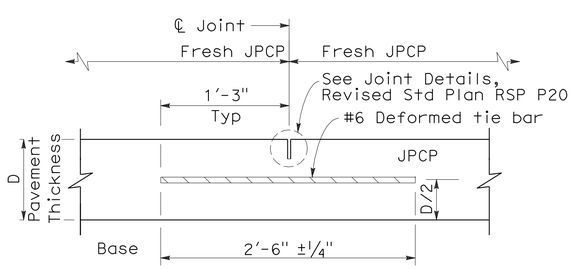

SECTION A-A

LONGITUDINAL CONTRACTION JOINT

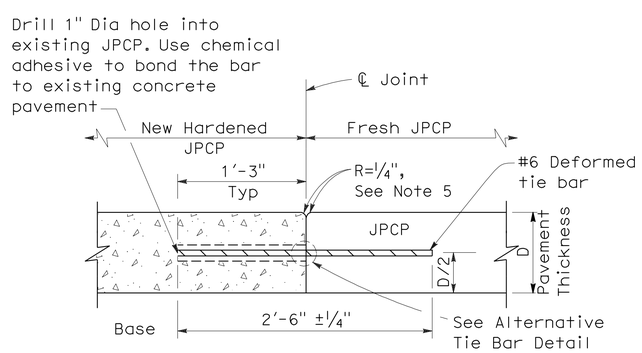

SECTION B-B

LONGITUDINAL CONSTRUCTION JOINT

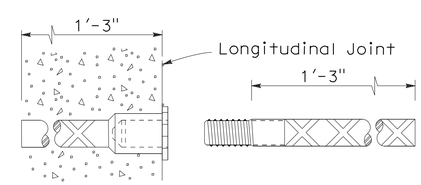

ALTERNATIVE TIE BAR SPLICE DETAIL

(Splice Coupler)

TIE BAR DETAILS

STATE OF CALIFORNIA
DEPARTMENT OF TRANSPORTATION

JOINTED PLAIN CONCRETE PAVEMENT

NO SCALE

RSP P1 DATED MAY 15, 2009 SUPERSEDES STANDARD PLAN P1
DATED MAY 1, 2006 - PAGE 119 OF THE STANDARD PLANS BOOK DATED MAY 2006.

REVISED STANDARD PLAN RSP P1

5-8-09

DIST	COUNTY	ROUTE	POST MILES TOTAL PROJECT	SHEET NO.	TOTAL SHEETS
12	Ora	405	5.0/5.6	72	92

William K. Farnbach
REGISTERED CIVIL ENGINEER

April 20, 2012
PLANS APPROVAL DATE

REGISTERED PROFESSIONAL ENGINEER William K. Farnbach No. C49042 Exp. 9-30-12 CIVIL STATE OF CALIFORNIA

The State of California or its officers or agents shall not be responsible for the accuracy or completeness of electronic copies of this plan sheet.

To accompany plans dated 5-29-12

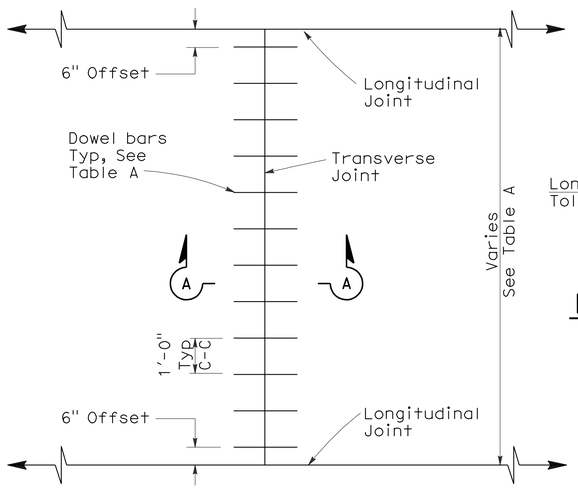

TRANSVERSE JOINT DOWEL BAR LAYOUT

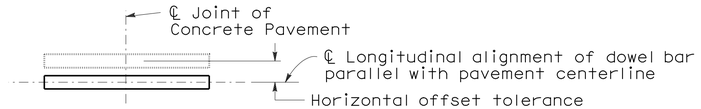

PLAN

HORIZONTAL OFFSET TOLERANCE

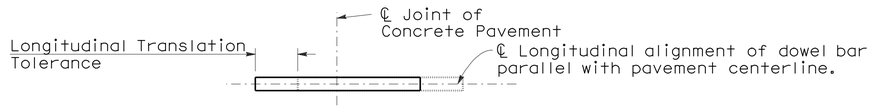

PLAN

LONGITUDINAL TRANSLATION TOLERANCE

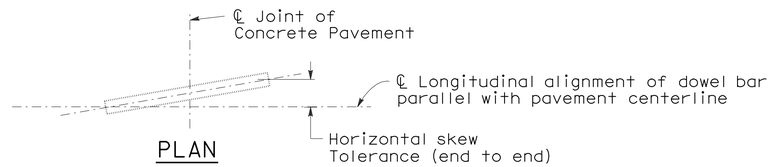

PLAN

HORIZONTAL SKEW TOLERANCE

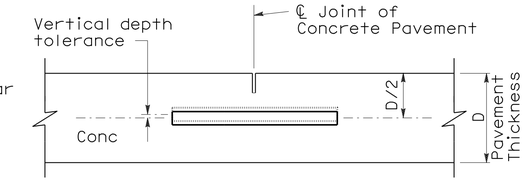

ELEVATION

VERTICAL DEPTH TOLERANCE

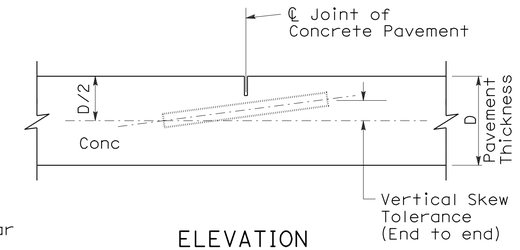

ELEVATION

VERTICAL SKEW TOLERANCE

NOTES:

1. See Revised Standard Plan RSP P1 for typical dowel bar placement and locations.
2. 1½" Dia dowel bars are to be used with a pavement thickness, D, equal to or greater than 0.70 feet. For pavement thickness, D, less than 0.70 feet, use 1¼" Dia dowel bars.
3. For widths not shown, see Project Plans.
4. If fresh concrete pavement is placed adjacent to existing concrete pavement, the top corner of the existing concrete pavement does not need to be rounded to the ¼" radius, as shown.
5. May also use ¾" Dia dowel bars 2'-4" ± ¼" in length. Center the length of dowel bars at the centerline of longitudinal joint.

TABLE A (See Note 3)

Dowel Bar Transverse Spacing Table	
Width between Longitudinal Joints	Number of Dowels between Longitudinal Joints
14'-0"	14
13'-0"	13
12'-0"	12
11'-0"	11
10'-0"	10
8'-0"	8
5'-0"	5
4'-0"	4

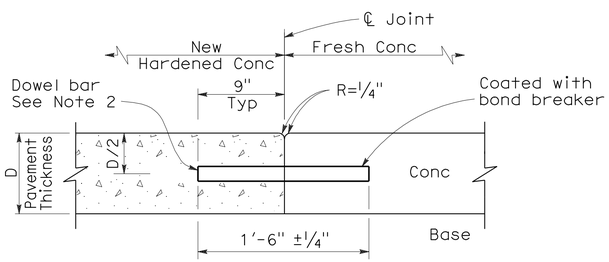

SECTION A-A

TRANSVERSE CONSTRUCTION JOINT DETAIL

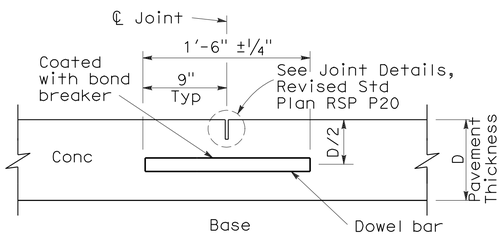

TRANSVERSE CONTRACTION JOINT

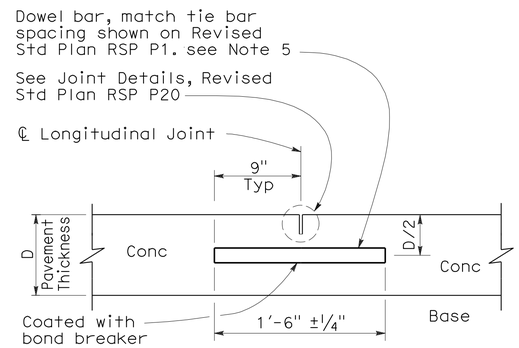

LONGITUDINAL CONTRACTION JOINT WITH DOWEL BARS

See Revised Std Plan RSP P18

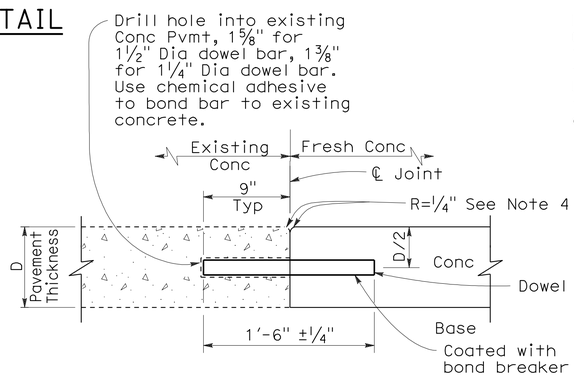

TRANSVERSE CONSTRUCTION JOINT FOR EXISTING CONCRETE PAVEMENT

Drill and bond locations

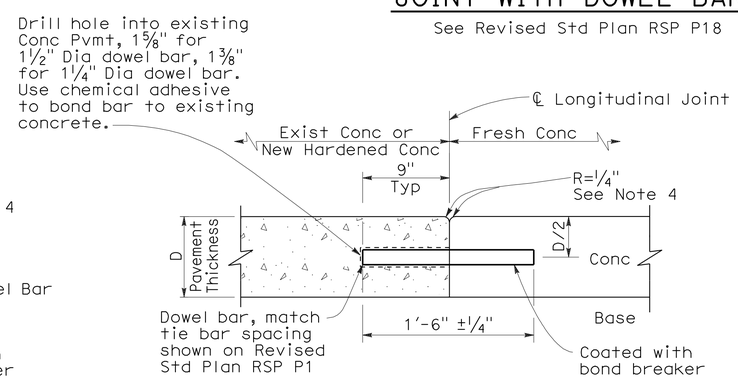

LONGITUDINAL CONSTRUCTION JOINT WITH DOWEL BARS

See Revised Std Plan RSP P18

STATE OF CALIFORNIA
DEPARTMENT OF TRANSPORTATION

CONCRETE PAVEMENT-DOWEL BAR DETAILS

NO SCALE

RSP P10 DATED APRIL 20, 2012 SUPERSEDES RSP P10 DATED MAY 15, 2009 AND STANDARD PLAN P10 DATED MAY 1, 2006 - PAGE 124 OF THE STANDARD PLANS BOOK DATED MAY 2006.

REVISED STANDARD PLAN RSP P10

2006 REVISED STANDARD PLAN RSP P10

2-22-12

DIST	COUNTY	ROUTE	POST MILES TOTAL PROJECT	SHEET NO.	TOTAL SHEETS
12	Ora	405	5.0/5.6	73	92

William K. Farnbach
REGISTERED CIVIL ENGINEER

April 20, 2012
PLANS APPROVAL DATE

REGISTERED PROFESSIONAL ENGINEER William K. Farnbach No. C49042 Exp. 9-30-12 CIVIL STATE OF CALIFORNIA

The State of California or its officers or agents shall not be responsible for the accuracy or completeness of electronic copies of this plan sheet.

To accompany plans dated 5-29-12

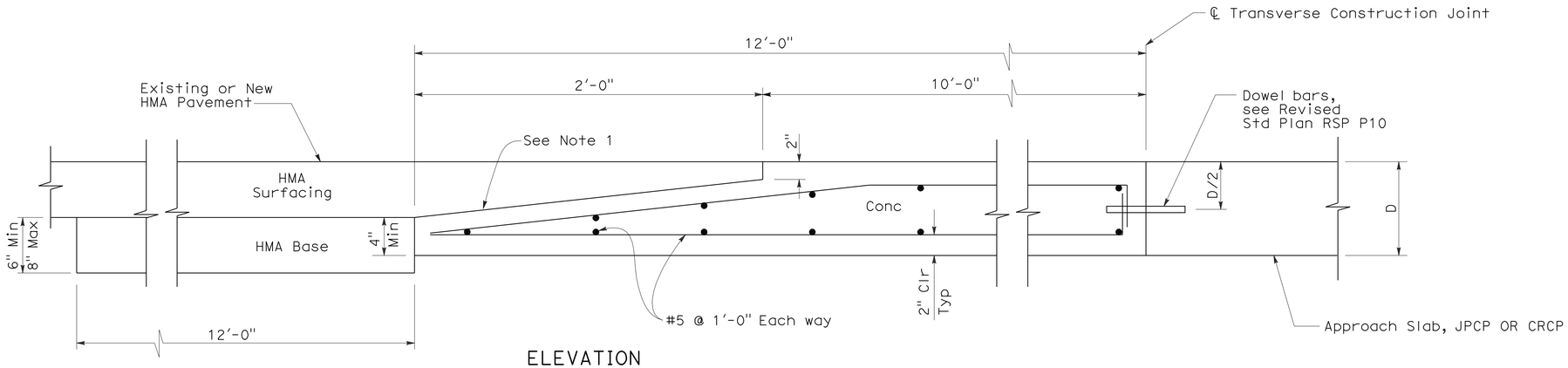

ELEVATION

CONCRETE PAVEMENT TRANSITION PANEL

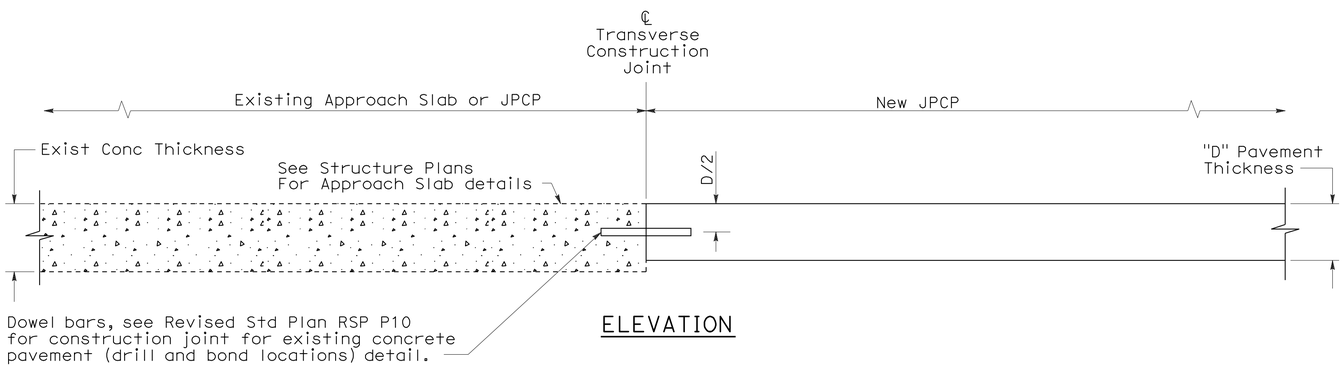

ELEVATION

TERMINAL JOINT TYPE 1

For Exist JPCP or Structure Approach Slab

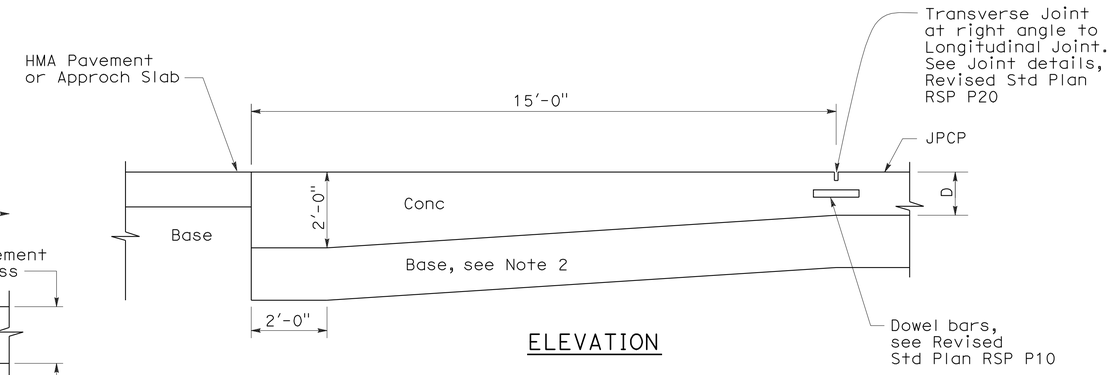

ELEVATION

PAVEMENT END ANCHOR

For HMA Pvmt or Structure Approach Slab

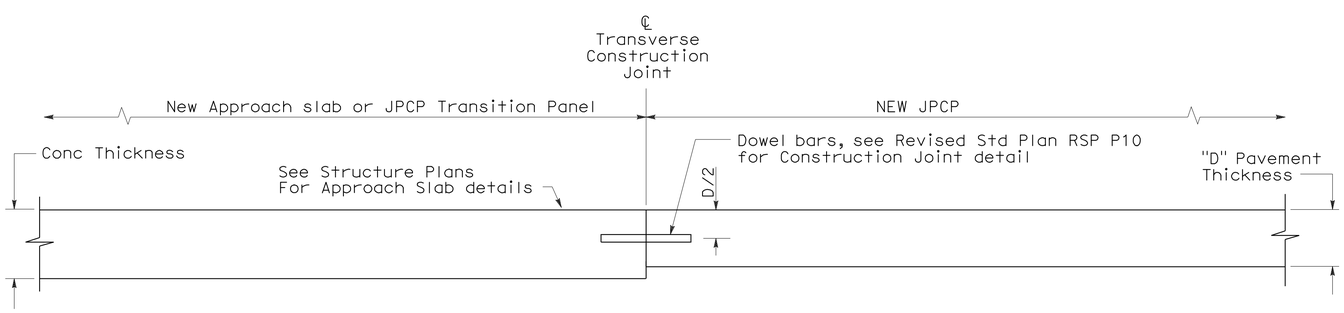

ELEVATION

TERMINAL JOINT TYPE 2

For JPCP Transition Panel or Structure Approach Slab

NOTES:

1. Heavy broom finish.
2. Maintain same base thickness as JPCP.

STATE OF CALIFORNIA
DEPARTMENT OF TRANSPORTATION

CONCRETE PAVEMENT-END PANEL PAVEMENT TRANSITIONS

NO SCALE

RSP P30 DATED APRIL 20, 2012 SUPERSEDES RSP P30 DATED MAY 15, 2009 AND STANDARD PLAN P30 DATED MAY 1, 2006 - PAGE 129 OF THE STANDARD PLANS BOOK DATED MAY 2006.

REVISED STANDARD PLAN RSP P30

2006 REVISED STANDARD PLAN RSP P30

2-22-12

DIST	COUNTY	ROUTE	POST MILES TOTAL PROJECT	SHEET NO.	TOTAL SHEETS
12	Ora	405	5.0/5.6	74	92

Raymond Don Tsztoo
REGISTERED CIVIL ENGINEER

January 18, 2008
PLANS APPROVAL DATE

REGISTERED PROFESSIONAL ENGINEER
Raymond Don Tsztoo
No. C37332
Exp. 6-30-08
CIVIL
STATE OF CALIFORNIA

The State of California or its officers or agents shall not be responsible for the accuracy or completeness of electronic copies of this plan sheet.

To accompany plans dated 5-29-12

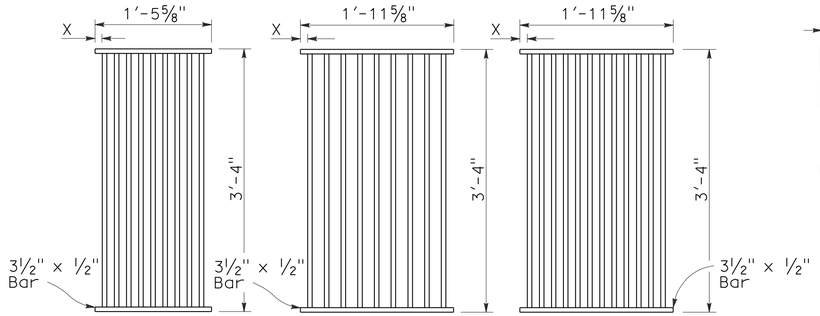

TYPE 18-9

1⅜" Clear spacing. Use within the roadbed on highways where bicycles and pedestrians are excluded.

TYPE 24-9

2" Clear spacing. Use in locations off the roadbed on all types of highways.

TYPE 24-12

1⅜" Clear spacing. Use within the roadbed on highways where bicycles and pedestrians are excluded.

RECTANGULAR GRATE DETAILS

(See table below)

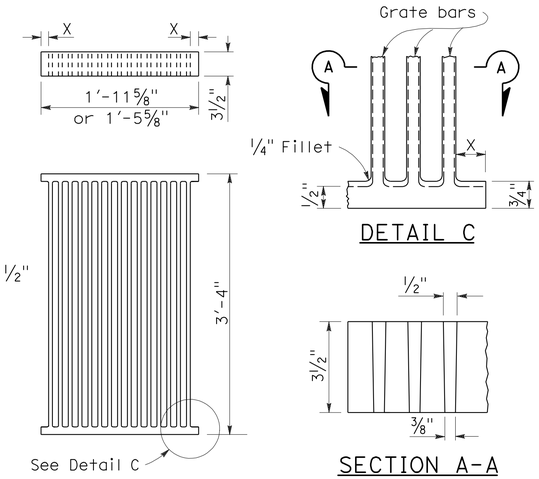

DETAIL C

SECTION A-A

ALTERNATIVE CAST NODULAR IRON GRATE OR CAST STEEL GRATE

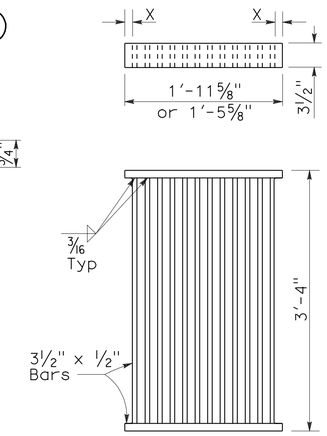

ALTERNATIVE WELDED GRATE

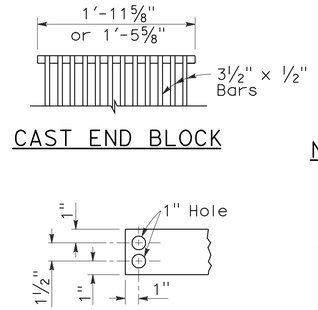

CAST END BLOCK

END OF BAR

NOTES:

1. Grate type numbers refer to approximate width of grate in inches and number of bars, respectively.
2. Contractor has the option of using cast nodular iron, cast steel, welded, bolted, or cast end block grate.
3. See Special Provisions for requirements pertaining to galvanizing or asphalt dipping of grates and frames.
4. Rounded top of bars optional on all grates.
5. Pipe inlets with a grate shall be placed so that bars parallel direction of principle surface flow.
6. Full penetration butt welds may be substituted for the fillet welds on all anchors.
7. Standard square, hexagon, round or equivalent headed anchors may be substituted for the right angle hooks on the anchors shown on this plan.
8. Grate and frame weights are based on welded grates (weights of face angles, steps, protection bars, etc. are not included).

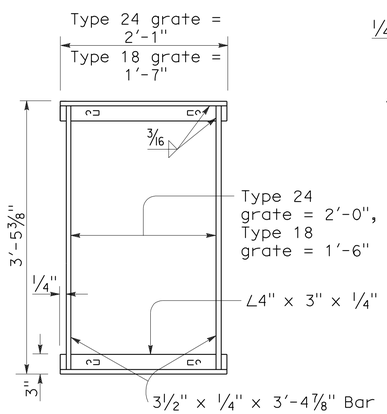

TYPICAL FRAME

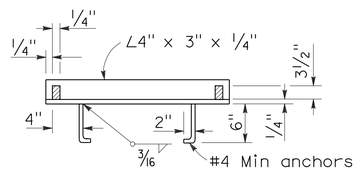

CROSS SECTION

(Thru frame)

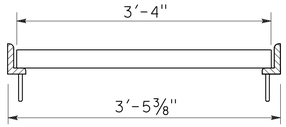

LONGITUDINAL SECTION

(Thru frame and grate)

RECTANGULAR FRAME DETAILS

(For all rectangular grates)

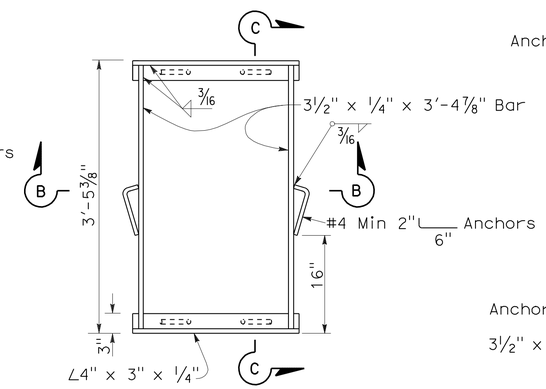

TYPICAL FRAME

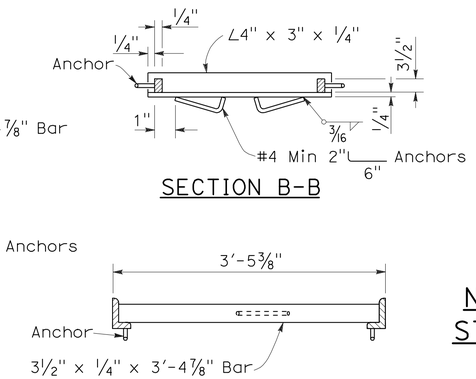

SECTION B-B

SECTION C-C

ALTERNATIVE ANCHOR FOR RECTANGULAR FRAME

(For details not shown, See Rectangular Frame Details)

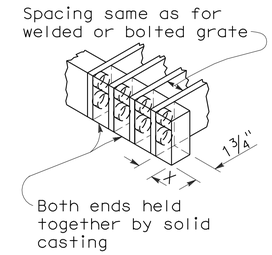

ALTERNATIVE CAST NODULAR IRON OR CAST STEEL END BLOCK GRATE

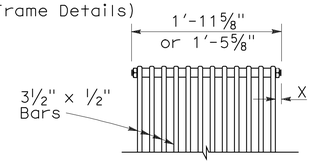

BOLTED END BLOCK

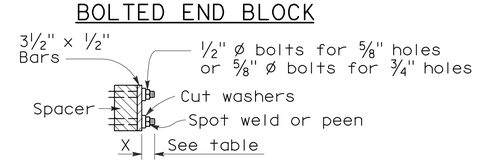

BOLTING DETAIL

ALTERNATIVE BOLTED GRATE

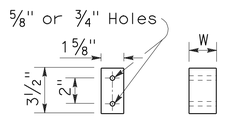

BAR SPACER

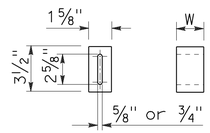

ALTERNATIVE SPACER

W = 1⅜" or 2"

GRATE BAR SPACING TABLE

TYPE	No. OF BARS	CLEAR BAR SPACING	X
18-9	9	1⅜"	1 1/16"
24-9	9	2"	1 9/16"
24-12	12	1⅜"	1¼"

INLET TYPE	COVER TYPE	WEIGHT LB
OS	PLATE	174
OL-7	PLATE	170
OL-10	PLATE	170
OL-14	PLATE	170
OL-21	PLATE	170
OCP	PLATE	112
OCPI	PLATE	112
OCPI	REDWOOD	42
OMP	PLATE	177
OMPI	PLATE	177

INLET TYPE	GRATE TYPE	No. OF GRATES	WEIGHT LB
GDO	24-12	2	634
GOL-7	24-12	1	326
GOL-10	24-12	1	326
GO,G1,G2,G3,G4 (TYPE 24)	24-9	1	263
	24-12	1	326
G4 (TYPE 18),G5,G6	18-9	1	249
GT1	18-9	2	498
GT2	18-9	2	498
GT3	24-12	2	652
GT4	24-12	2	652
TRASH RACK			22

BASIS FOR MISC IRON & STEEL FINAL PAY WEIGHTS FOR DRAINAGE INLETS

(See General Notes, No 8)

STATE OF CALIFORNIA
DEPARTMENT OF TRANSPORTATION

GRATE DETAILS

NO SCALE

RSP D77A DATED JANUARY 18, 2008 SUPERSEDES STANDARD PLAN D77A DATED MAY 1, 2006 - PAGE 155 OF THE STANDARD PLANS BOOK DATED MAY 2006.

REVISED STANDARD PLAN RSP D77A

2006 REVISED STANDARD PLAN RSP D77A

12-14-07

DIST	COUNTY	ROUTE	POST MILES TOTAL PROJECT	SHEET NO.	TOTAL SHEETS
12	Ora	405	5.0/5.6	75	92

LICENSED LANDSCAPE ARCHITECT

June 5, 2009
PLANS APPROVAL DATE

LICENSED LANDSCAPE ARCHITECT
Gregory A. Balzer 2016
10 (Renewal)
2-28-11
(Renewal) Date
5-14-09
Date
STATE OF CALIFORNIA

The State of California or its officers or agents shall not be responsible for the accuracy or completeness of electronic copies of this plan sheet.

To accompany plans dated 5-29-12

A

AB	aggregate base
ABS	acrylonitrile-butadiene-styrene
AC	asphalt concrete
Adj	adjacent/adjustable
AIC	auxiliary irrigation controller
Alt	alternative
AMEND	amendment
ARV	air release valve
AUTO	automatic
AUX	auxiliary
AVB	atmospheric vacuum breaker

B

B&B	balled and burlapped
B/B	brass/bronze
B/B/PL	brass/bronze/plastic
B/PL	brass/plastic
BFM	bonded fiber matrix
Bit Ctd	bituminous coated
BP	booster pump
BPA	backflow preventer assembly
BPAE	backflow preventer assembly in enclosure
BPE	backflow preventer enclosure
BV	ball valve

C

CAP	corrugated aluminum pipe
CARV	combination air release valve
CCA	cam coupler assembly
CEC	controller enclosure cabinet
CHDPE	corrugated high density polyethylene
CL	chain link
CNC	control and neutral conductors
Conc	concrete
Cond	conduit
CSP	corrugated steel pipe
CST	center strip
CV	check valve

D

Dia	diameter
DIP	ductile iron pipe
DN	diameter nominal

E

EA	each
Elect	electric/electrical
Elev	elevation
ENCL	enclosure
EP	edge of pavement
ES	edge of shoulder
EST	end strip
ESTB	establishment
ETW	edge of traveled way

F

F	full circle
F/P	full/part circle
FAU	filter assembly unit
FCV	flow control valve
FERT	fertilizer
FG	finished grade
FIPT	female iron pipe thread
FIS	fertilizer injector system
FL	flow line
FM	flow monitor
FS	flow sensor
Ft	foot/feet
FV	flush valve

G

GAL	Gallon(s)
Galv	galvanized
GARV	garden valve
GPH	gallons per hour
GPM	gallons per minute
GSP	galvanized steel pipe
GV	gate valve

H

H	half circle
HB	hose bib
HDPE	high density polyethylene
HP	horsepower/hinge point
HPL	high pressure line
Hwy	highway

I

IC	irrigation controller
ICC	irrigation controller(s) in controller enclosure cabinet
ID	inside diameter
In	inches
IFS	irrigation filtration system
IPS	iron pipe size
IPT	iron pipe thread
Irr	irrigation

L

L	length
LF	linear foot

M

Max	maximum
MBGR	metal beam guard railing
MCV	manual control valve
MIC	master irrigation controller
Min	minimum
MIPT	male iron pipe thread
Misc	miscellaneous
Mtl	material
MVP	maintenance vehicle pullout

N

NCN	no common name
NL	nozzle line
No.	number
NPT	national pipe thread

O

O/C	on center
OD	outside diameter
Oz	ounce

P

P	part circle
PB	pull box
PCC	portland cement concrete
PE	polyethylene
Pkt	packet
PL	plastic
PLT	plant/planting
PLT ESTB	plant establishment
PM	post mile
PR	pressure rated
PRLV	pressure relief valve
PSFM	polymer stabilized fiber matrix
PSI	pounds per square inch
PRV	pressure reducing valve
PVC	polyvinyl chloride
Pvmt	pavement

Q

Q	quarter circle
QCV	quick coupling valve

R

R	radius
RCP	reinforced concrete pipe
RCV	remote control valve
RCVM	remote control valve (master)
RCVMF	remote control valve (master) w/ flow meter
RCW	recycled/reclaimed water
RECP	rolled erosion control product
REQ	required
R/W	right of way

S

S	slip
SCC	sprinkler control conduit
SCH	schedule
SF	state-furnished
Shld	shoulder
SQFT	square foot/feet
SQYD	square yard(s)
SST	side strip
Sta	station
Std	standard
SW	sidewalk/sound wall

T

T	third circle/thread
TLS	truck loading standpipe
TQ	three quarter circle
TRM	turf reinforcement mat
TRVD	traveled
TT	two third circle
Typ	typical

U

UG	underground

V

VAU	valve assembly unit

W

W	width
W/	with
WM	water meter
WS	wye strainer
WSP	welded steel pipe
WWM	welded wire mesh

NOTE:

FOR ADDITIONAL ABBREVIATIONS, SEE STANDARD PLANS A10A AND A10B.

STATE OF CALIFORNIA
DEPARTMENT OF TRANSPORTATION

PLANTING AND IRRIGATION ABBREVIATIONS

NO SCALE

RSP H1 DATED JUNE 5, 2009 SUPERSEDES STANDARD PLAN H1
DATED MAY 1, 2006 - PAGE 201 OF THE STANDARD PLANS BOOK DATED MAY 2006.

REVISED STANDARD PLAN RSP H1

2006 REVISED STANDARD PLAN RSP H1

DIST	COUNTY	ROUTE	POST MILES TOTAL PROJECT	SHEET NO.	TOTAL SHEETS
12	Ora	405	5.0/5.6	76	92

LICENSED LANDSCAPE ARCHITECT

June 5, 2009
PLANS APPROVAL DATE

LICENSED LANDSCAPE ARCHITECT
Gregory A. Balzer 2016
9-10-09 Renewal Date
2-28-11 Renewal Date
5-14-09 Date
STATE OF CALIFORNIA

The State of California or its officers or agents shall not be responsible for the accuracy or completeness of electronic copies of this plan sheet.

To accompany plans dated 5-29-12

EXISTING	PROPOSED	ITEM DESCRIPTION
		WATER METER (WM)
		BACKFLOW PREVENTER ASSEMBLY (BPA)
		BACKFLOW PREVENTER ASSEMBLY IN ENCLOSURE (BPAE)
		BACKFLOW PREVENTER ENCLOSURE (BPE)
		BOOSTER PUMP (BP)
		TRUCK LOADING STANDPIPE (TLS)
FS	FS	FLOW SENSOR (FS)
X	X	MASTER IRRIGATION CONTROLLER (MIC)
		AUXILIARY IRRIGATION CONTROLLER (AIC)
		IRRIGATION CONTROLLER (IC)/ IRRIGATION CONTROLLER (IC) (BATTERY) IRRIGATION CONTROLLER (IC) (SOLAR)
		IRRIGATION CONTROLLER(S) IN CONTROLLER ENCLOSURE CABINET (ICC)
		CONTROL AND NEUTRAL CONDUCTORS (CNC)
SCC	SCC	SPRINKLER CONTROL CONDUIT (SCC)
		IRRIGATION CROSSOVER
		EXTEND IRRIGATION CROSSOVER
		IRRIGATION SLEEVE
dip	DIP	DUCTILE IRON PIPE (SUPPLY LINE) (MAIN) (DIP)
		GALVANIZED STEEL PIPE (SUPPLY LINE) (MAIN) (GSP)
		GALVANIZED STEEL PIPE (SUPPLY LINE) (LATERAL) (GSP)
		PLASTIC PIPE (PR 200) (SUPPLY LINE) (MAIN)
		PLASTIC PIPE (PR 200) (SUPPLY LINE) (LATERAL)
		PLASTIC PIPE (IRRIGATION LINE)
		REMOTE CONTROL VALVE (RCV) REMOTE CONTROL VALVE (MASTER) (RCVM) REMOTE CONTROL VALVE (MASTER) W/FLOW METER (RCVMF)
		MANUAL CONTROL VALVE (MCV)
		VALVE ASSEMBLY UNIT (VAU)
		WYE STRAINER (WS)
		FILTER ASSEMBLY UNIT (FAU)
		GATE VALVE (GV)
		BALL VALVE (BV)

EXISTING	PROPOSED	ITEM DESCRIPTION
		QUICK COUPLING VALVE (QCV)
		CAM COUPLER ASSEMBLY (CCA)
		PRESSURE REDUCING VALVE (PRV)
		PRESSURE RELIEF VALVE (PRLV)
		FLOW CONTROL VALVE (FCV)
		COMBINATION AIR RELEASE VALVE (CARV)
		CHECK VALVE (CV)
		FLUSH VALVE (FV)
		NOZZLE LINE W/TURNING UNION
		IRRIGATION SYSTEM
		IRRIGATION SYSTEM TO BE REMOVED
		CHAIN LINK GATE
		QUICK COUPLING VALVE W/SPRINKLER PROTECTOR
3	3	SPRINKLER W/SPRINKLER PROTECTOR
	C	CONNECT TO EXISTING SYSTEM
		CAP
		CAP EXISTING

VALVE CODE

RCV SIZE
IRRIGATION CONTROLLER
CONTROLLER STATION
VALVE IN PARALLEL (IF APPLICABLE)
GPM
QUANTITY OF SPRINKLERS (WHEN SHOWN)

* 2½"-A-2b-40 -60

MCV SIZE
VALVE NUMBER
GPM
QUANTITY OF TYPE SPRINKLERS (WHEN SHOWN)

* 2"-3-30 -50

* VALVE CODES FOR EXISTING VALVES ARE SHOWN IN A DASHED ENCLOSURE.

STATE OF CALIFORNIA
DEPARTMENT OF TRANSPORTATION

PLANTING AND IRRIGATION SYMBOLS

NO SCALE

RSP H2 DATED JUNE 5, 2009 SUPERSEDES RSP H2 DATED MARCH 7, 2008 AND STANDARD PLAN H2 DATED MAY 1, 2006 - PAGE 202 OF THE STANDARD PLANS BOOK DATED MAY 2006.

REVISED STANDARD PLAN RSP H2

2006 REVISED STANDARD PLAN RSP H2

5-11-09

DIST	COUNTY	ROUTE	POST MILES TOTAL PROJECT	SHEET NO.	TOTAL SHEETS
12	Ora	405	5.0/5.6	77	92

LICENSED LANDSCAPE ARCHITECT

June 5, 2009
PLANS APPROVAL DATE

The State of California or its officers or agents shall not be responsible for the accuracy or completeness of electronic copies of this plan sheet.

LICENSED LANDSCAPE ARCHITECT
Gregory A. Balzer 2576
Signature
2-28-11
Renewal Date
5-14-09
Date
STATE OF CALIFORNIA

To accompany plans dated 5-29-12

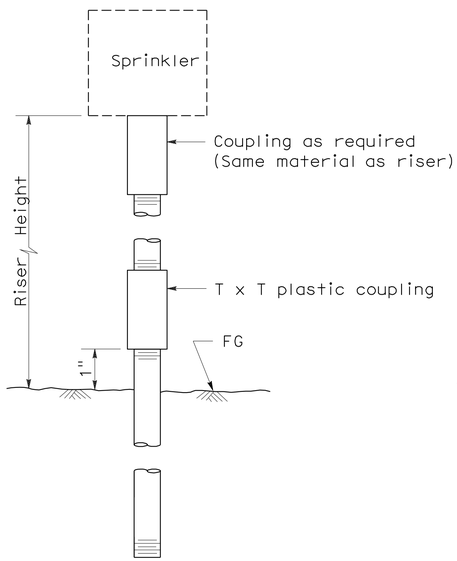

ELEVATION
RISER TYPE I

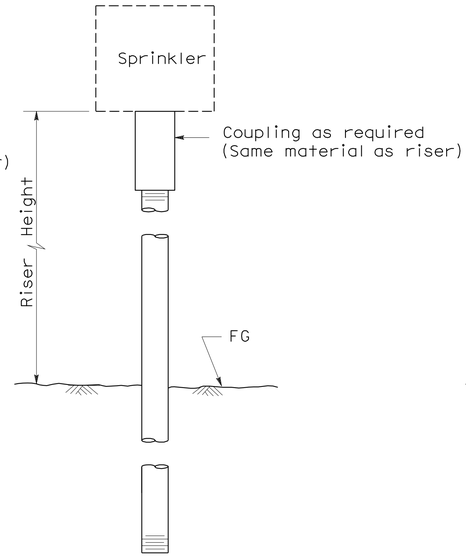

ELEVATION
RISER TYPE II

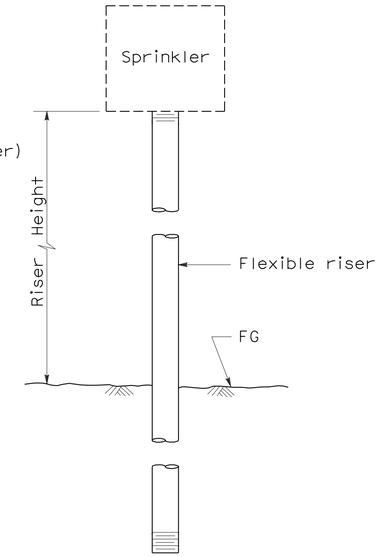

ELEVATION
RISER TYPE III

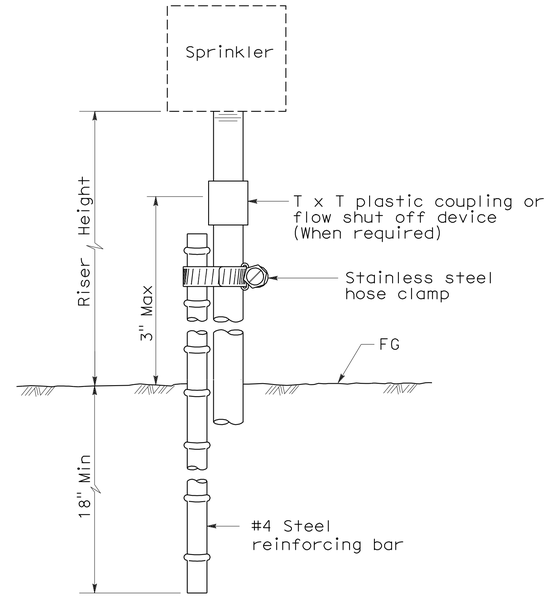

ELEVATION
RISER TYPE IV

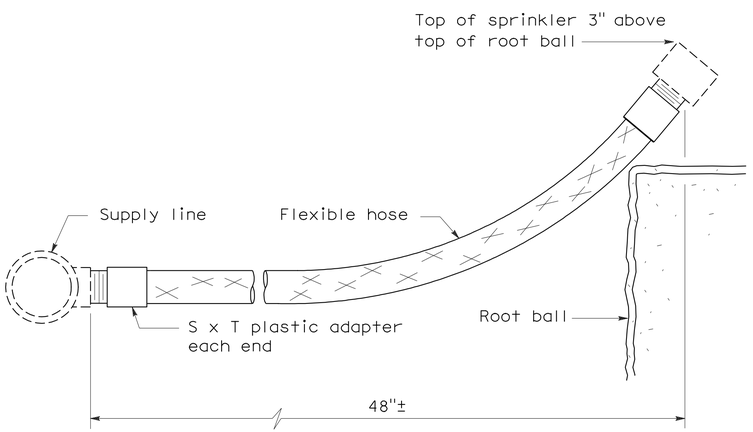

ELEVATION
RISER TYPE V

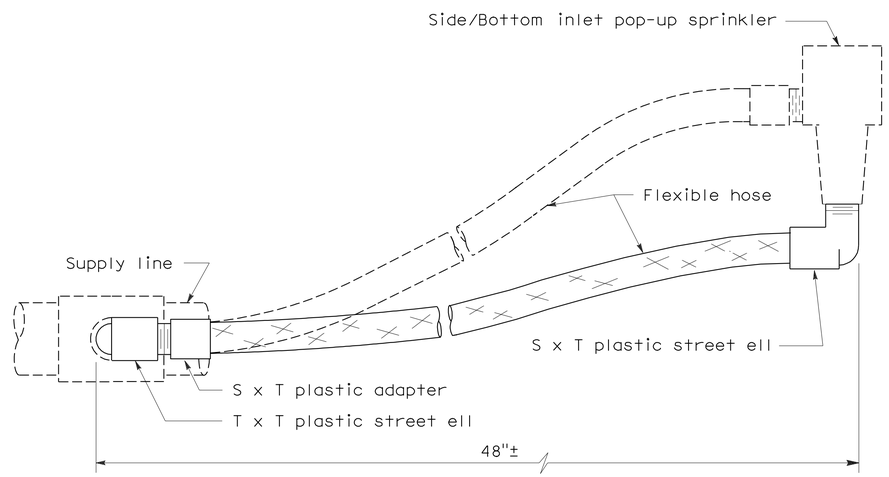

ELEVATION
RISER TYPE VI

STATE OF CALIFORNIA
DEPARTMENT OF TRANSPORTATION

PLANTING AND IRRIGATION DETAILS

NO SCALE

RSP H5 DATED JUNE 5, 2009 SUPERSEDES STANDARD PLAN H5
DATED MAY 1, 2006 - PAGE 205 OF THE STANDARD PLANS BOOK DATED MAY 2006.

REVISED STANDARD PLAN RSP H5

2006 REVISED STANDARD PLAN RSP H5

5-28-09

DIST	COUNTY	ROUTE	POST MILES TOTAL PROJECT	SHEET NO.	TOTAL SHEETS
12	Ora	405	5.0/5.6	78	92

LICENSED LANDSCAPE ARCHITECT

June 5, 2009
PLANS APPROVAL DATE

The State of California or its officers or agents shall not be responsible for the accuracy or completeness of electronic copies of this plan sheet.

LICENSED LANDSCAPE ARCHITECT Gregory A. Balzer 2576 STATE OF CALIFORNIA
9-10-09 Renewal Date
2-28-11 Renewal Date
5-14-09 Date

To accompany plans dated 5-29-12

2006 REVISED STANDARD PLAN RSP H7

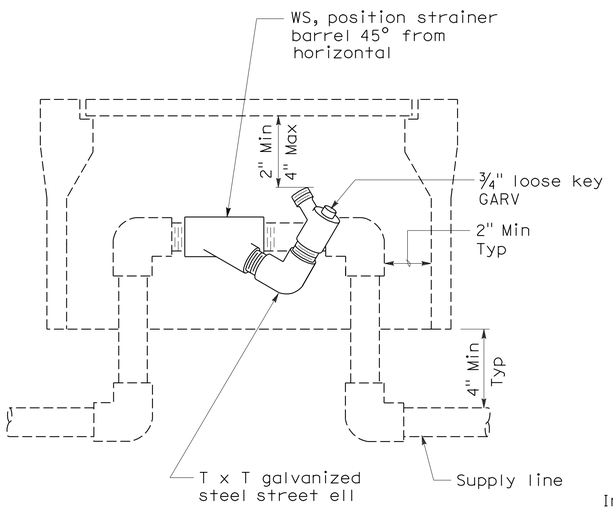

ELEVATION
WYE STRAINER

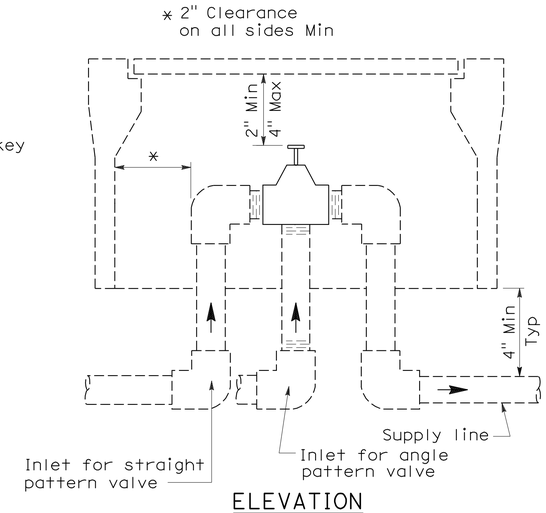

ELEVATION
VALVE

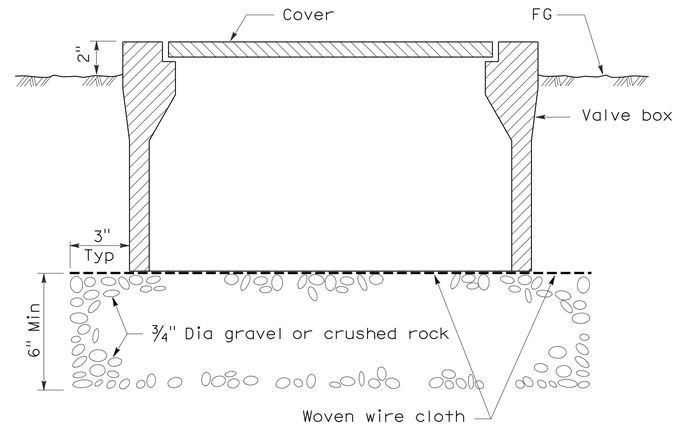

SECTION
VALVE BOX

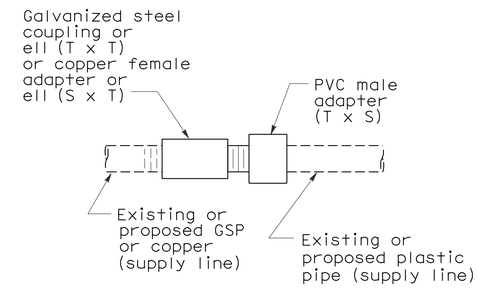

PLAN
GALVANIZED OR COPPER PIPE CONNECTION TO PLASTIC PIPE

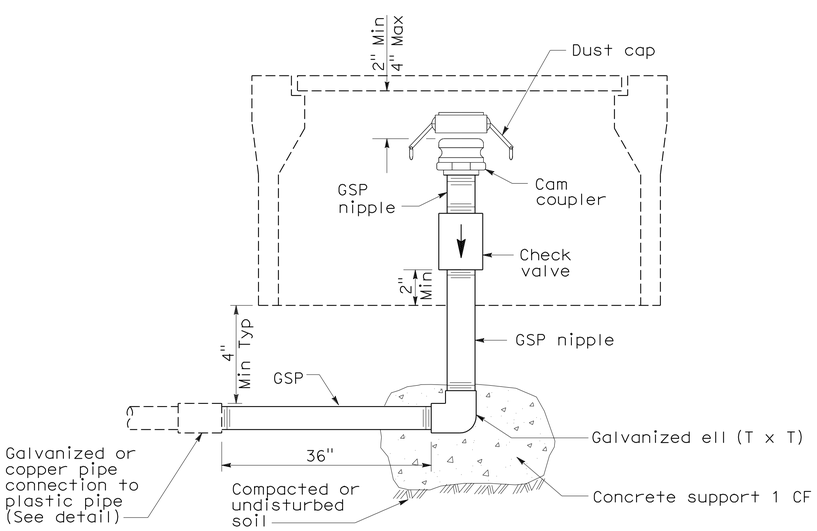

ELEVATION
CAM COUPLER ASSEMBLY

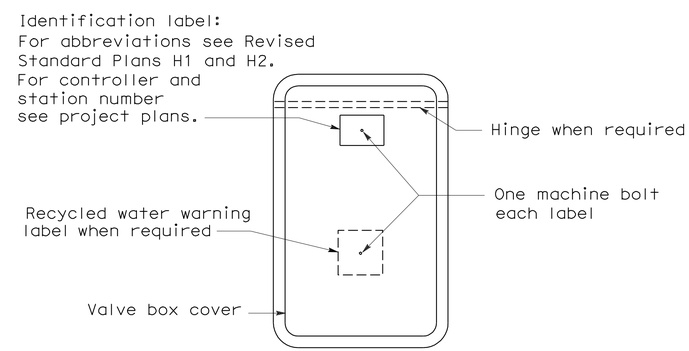

PLAN

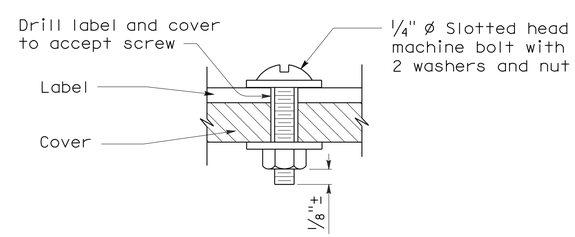

SECTION
VALVE BOX IDENTIFICATION

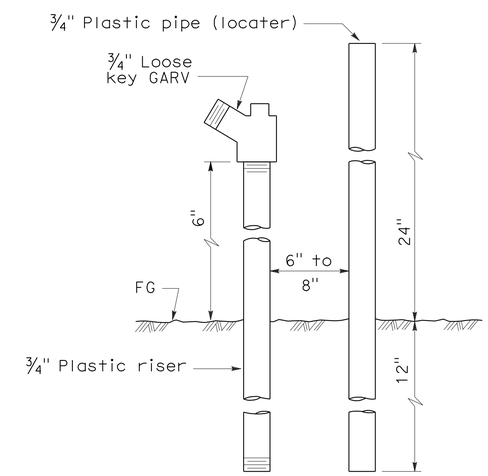

ELEVATION
FLUSH VALVE

STATE OF CALIFORNIA
DEPARTMENT OF TRANSPORTATION

PLANTING AND IRRIGATION DETAILS

NO SCALE

RSP H7 DATED JUNE 5, 2009 SUPERSEDES STANDARD PLAN H7
DATED MAY 1, 2006 - PAGE 207 OF THE STANDARD PLANS BOOK DATED MAY 2006.

REVISED STANDARD PLAN RSP H7

5-28-09

DIST	COUNTY	ROUTE	POST MILES TOTAL PROJECT	SHEET NO.	TOTAL SHEETS
12	Ora	405	5.0/5.6	79	92

Randell D. Hiatt
REGISTERED CIVIL ENGINEER

June 6, 2008
PLANS APPROVAL DATE

REGISTERED PROFESSIONAL ENGINEER
Randell D. Hiatt
No. C50200
Exp. 6-30-09
CIVIL
STATE OF CALIFORNIA

The State of California or its officers or agents shall not be responsible for the accuracy or completeness of electronic copies of this plan sheet.

To accompany plans dated 5-29-12

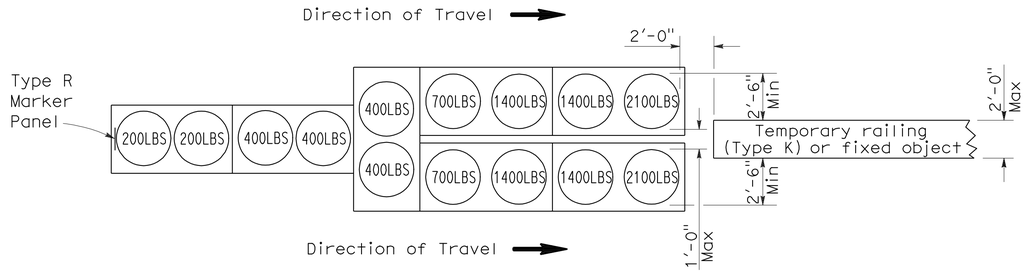

ARRAY 'TU14'

Approach speed 45 mph or more

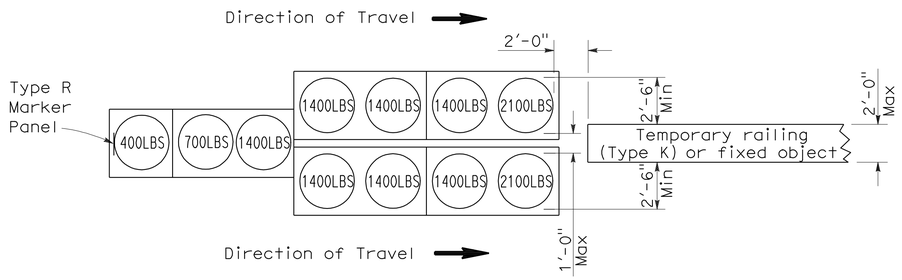

ARRAY 'TU11'

Approach speed less than 45 mph

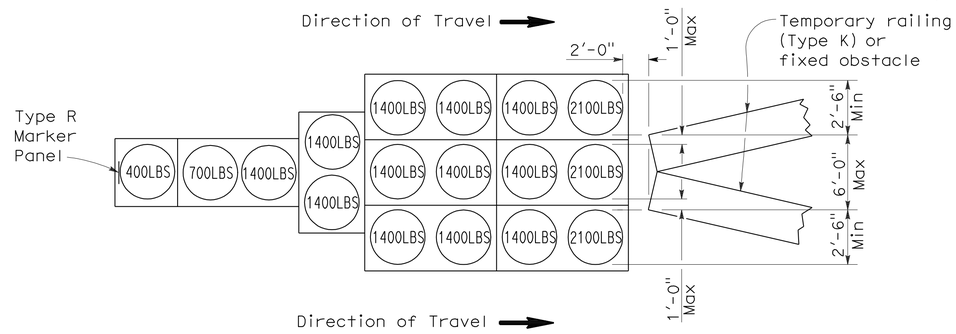

ARRAY 'TU17'

Approach speed less than 45 mph

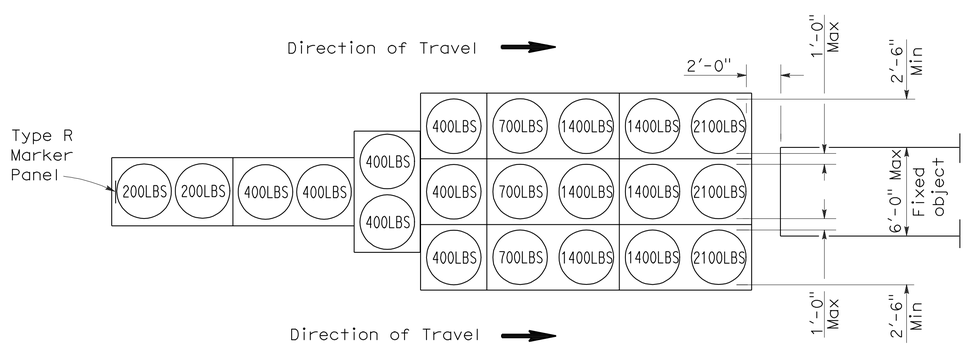

ARRAY 'TU21'

Approach speed 45 mph or more

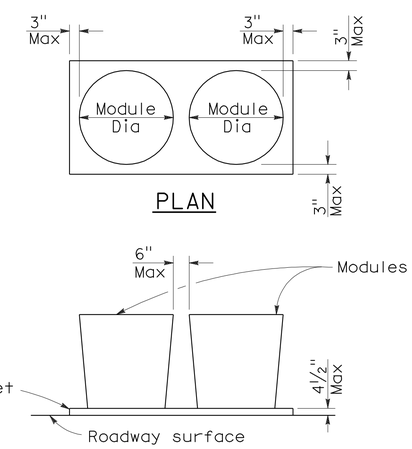

ELEVATION

CRASH CUSHION PALLET DETAIL

See Note 7

NOTES:

1. (XXX) Indicates sand filled module location and weight of sand in pounds for each module. Module spacing is based on the greater diameter of the module.
2. All sand weights are nominal.
3. Temporary crash cushion arrays shall not encroach on the traveled way.
4. Place the top of Type R marker panel 1" below the module lid.
5. Refer to Standard Plan A73B for marker details.
6. Approach speeds indicated conform to NCHRP 350 Report criteria.
7. Use of pallets is optional.

STATE OF CALIFORNIA
DEPARTMENT OF TRANSPORTATION

TEMPORARY CRASH CUSHION, SAND FILLED (UNIDIRECTIONAL)

NO SCALE

RSP T1A DATED JUNE 6, 2008 SUPERSEDES STANDARD PLAN T1A
DATED MAY 1, 2006 - PAGE 211 OF THE STANDARD PLANS BOOK DATED MAY 2006.

REVISED STANDARD PLAN RSP T1A

2006 REVISED STANDARD PLAN RSP T1A

DIST	COUNTY	ROUTE	POST MILES TOTAL PROJECT	SHEET NO.	TOTAL SHEETS
12	Ora	405	5.0/5.6	80	92

Randell D. Hiatt
REGISTERED CIVIL ENGINEER

June 6, 2008
PLANS APPROVAL DATE

REGISTERED PROFESSIONAL ENGINEER
Randell D. Hiatt
No. C50200
Exp. 6-30-09
CIVIL
STATE OF CALIFORNIA

The State of California or its officers or agents shall not be responsible for the accuracy or completeness of electronic copies of this plan sheet.

To accompany plans dated 5-29-12

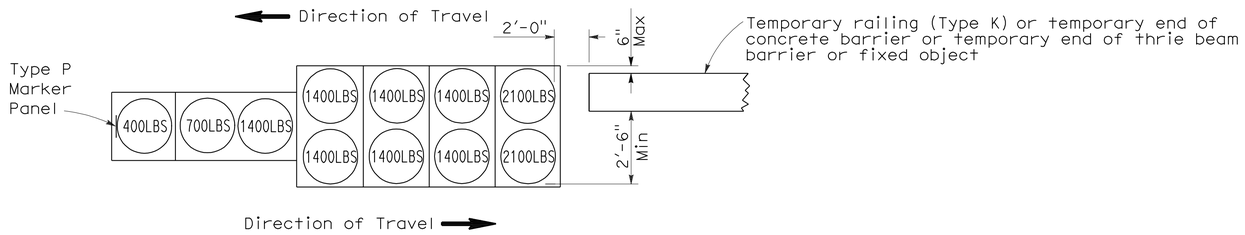

ARRAY 'TB11'

Approach speed less than 45 mph

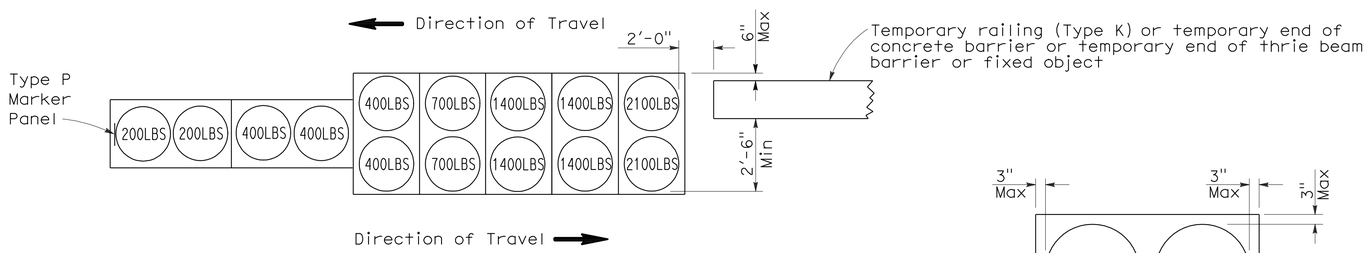

ARRAY 'TB14'

Approach speed 45 mph or more

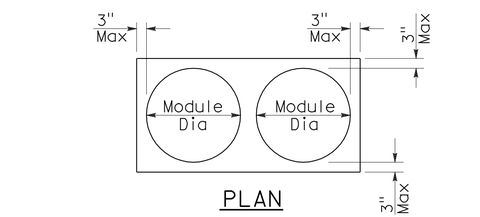

PLAN

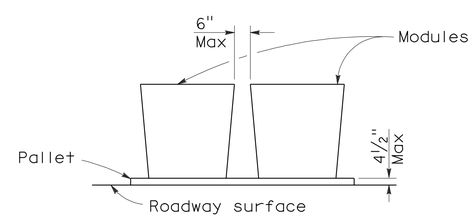

ELEVATION

CRASH CUSHION PALLET DETAIL

See Note 7

NOTES:

1. (XXX) Indicates sand filled module location and weight of sand in pounds for each module. Module spacing is based on the greater diameter of the module.
2. All sand weights are nominal.
3. Temporary crash cushion arrays shall not encroach on the traveled way.
4. Place the Type P marker panel so that the bottom of the panel rests upon the pallet.
5. Refer to Standard Plan A73B for marker details.
6. Approach speeds indicated conform to NCHRP 350 Report criteria.
7. Use of pallets is optional.

STATE OF CALIFORNIA
DEPARTMENT OF TRANSPORTATION

TEMPORARY CRASH CUSHION, SAND FILLED (BIDIRECTIONAL)

NO SCALE

RSP T1B DATED JUNE 6, 2008 SUPERSEDES STANDARD PLAN T1B
DATED MAY 1, 2006 - PAGE 212 OF THE STANDARD PLANS BOOK DATED MAY 2006.

REVISED STANDARD PLAN RSP T1B

2006 REVISED STANDARD PLAN RSP T1B

DIST	COUNTY	ROUTE	POST MILES TOTAL PROJECT	SHEET NO.	TOTAL SHEETS
12	Ora	405	5.0/5.6	81	92

Randell D. Hiatt
REGISTERED CIVIL ENGINEER

June 6, 2008
PLANS APPROVAL DATE

REGISTERED PROFESSIONAL ENGINEER
Randell D. Hiatt
No. C50200
Exp. 6-30-09
CIVIL
STATE OF CALIFORNIA

The State of California or its officers or agents shall not be responsible for the accuracy or completeness of electronic copies of this plan sheet.

To accompany plans dated 5-29-12

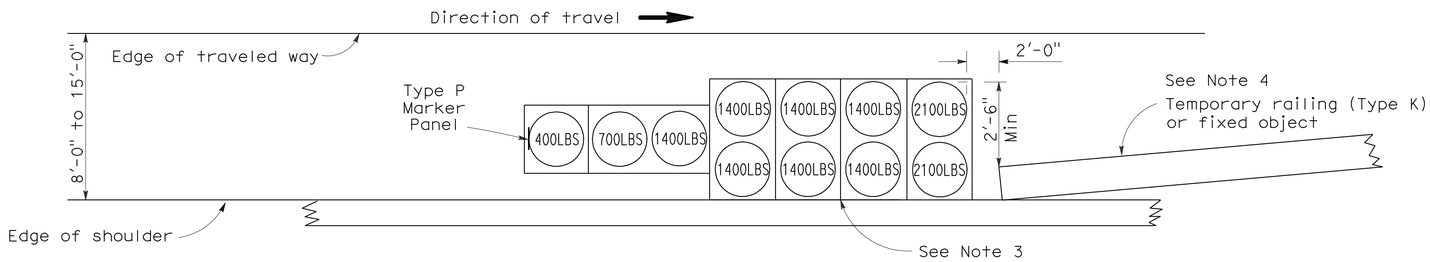

ARRAY 'TS11'

Approach speed less than 45 mph
See Note 9

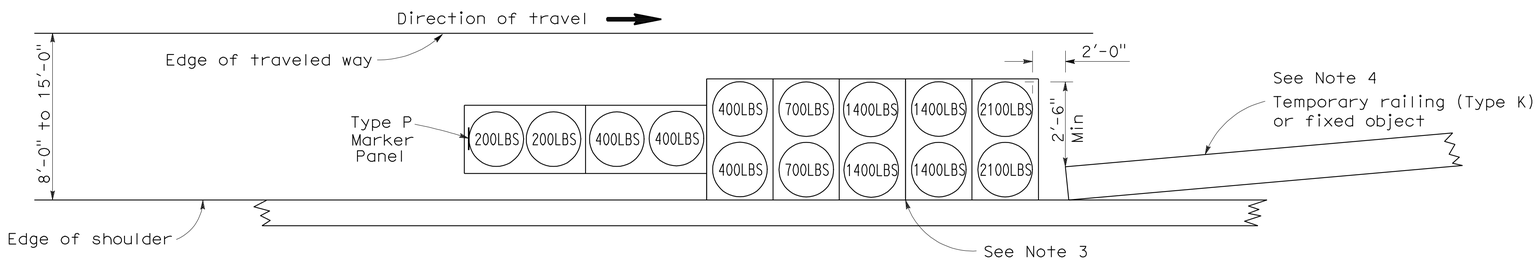

ARRAY 'TS14'

Approach speed 45 mph or more
See Note 9

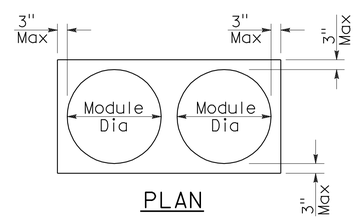

PLAN

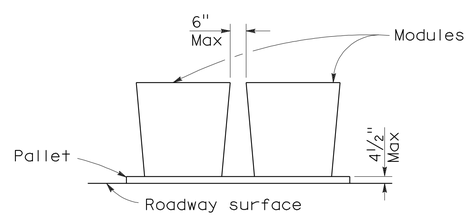

ELEVATION

CRASH CUSHION PALLET DETAIL

See Note 11

NOTES:

1. (XXX) Indicates sand filled module location and weight of sand in pounds for each module. Module spacing is based on the greater diameter of the module.
2. All sand weights are nominal.
3. The temporary crash cushion arrays shown on this plan shall be used only in locations where there will be traffic on one side of the temporary crash cushion array.
4. If the fixed object or approach end of the temporary railing is less than 15'-0" from the edge of traveled way, a temporary crash cushion is required in a construction or work zone.
5. Temporary crash cushion arrays shall not encroach on the traveled way.
6. Arrays for median shoulders shall conform to details shown on this plan for outside shoulders.
7. Place the Type P marker panel so that the bottom of the panel rests upon the pallet and faces traffic.
8. Refer to Standard Plan A73B for marker details.
9. For shoulder widths less than 8'-0", appropriate approved crash cushion protection, other than sand filled modules, shall be provided at fixed objects and at approach ends of temporary railing. The specific type of crash cushion shall be as shown on the project plans or as specified in the Special Provisions, or if not shown on the project plans or specified in the Special Provisions, shall be as approved by the Engineer.
10. Approach speeds indicated conform to NCHRP 350 Report criteria.
11. Use of pallets is optional.

STATE OF CALIFORNIA
DEPARTMENT OF TRANSPORTATION

TEMPORARY CRASH CUSHION, SAND FILLED (SHOULDER INSTALLATIONS)

NO SCALE

RSP T2 DATED JUNE 6, 2008 SUPERSEDES STANDARD PLAN T2
DATED MAY 1, 2006 - PAGE 213 OF THE STANDARD PLANS BOOK DATED MAY 2006.

REVISED STANDARD PLAN RSP T2

2006 REVISED STANDARD PLAN RSP T2

Dist	COUNTY	ROUTE	POST MILES TOTAL PROJECT	SHEET No.	TOTAL SHEETS
12	Ora	405	5.0/5.6	82	92

Randell D. Hiatt
REGISTERED CIVIL ENGINEER

May 20, 2011
PLANS APPROVAL DATE

REGISTERED PROFESSIONAL ENGINEER
Randell D. Hiatt
No. C50200
Exp. 6-30-11
CIVIL
STATE OF CALIFORNIA

The State of California or its officers or agents shall not be responsible for the accuracy or completeness of electronic copies of this plan sheet.

To accompany plans dated 5-29-12

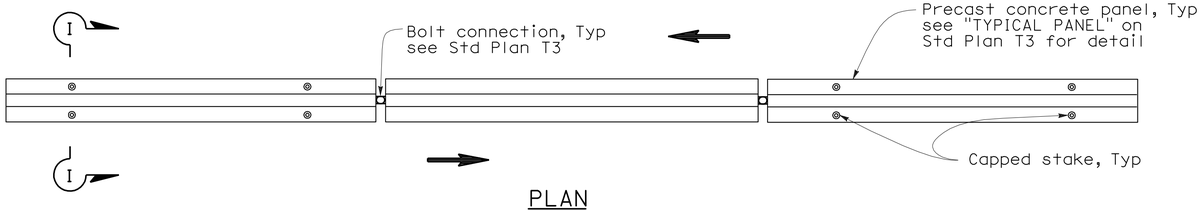

PLAN

RAILING STAKING CONFIGURATION FOR TWO-WAY TRAFFIC

See Note 1

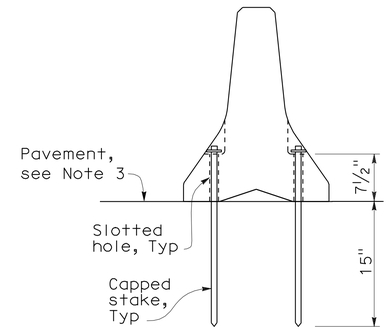

SECTION I-I

NOTES:

1. Where Type K Temporary Railing is placed as a temporary or long term barrier in two-way traffic on highways with less than 24" from the edge of traveled way, use four capped stakes per every other panel with end panels staked.
2. Where Type K Temporary Railing is placed 3" to 24" from the edge of an excavation on highways, use two capped stakes per panel along the traffic side.
3. Staked Type K Temporary Railing must be supported by at least 4" thick concrete, hot mix asphalt or existing asphalt concrete pavement.
4. The minimum yield strength for the washer must be 60,000 psi.
5. Direction of adjacent traffic indicated by ⟹.

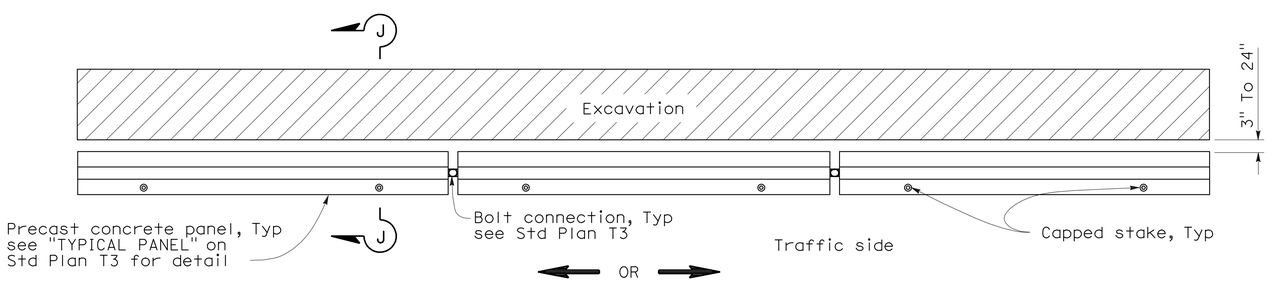

PLAN

RAILING STAKING CONFIGURATION ADJACENT TO AN EXCAVATION

See Note 2

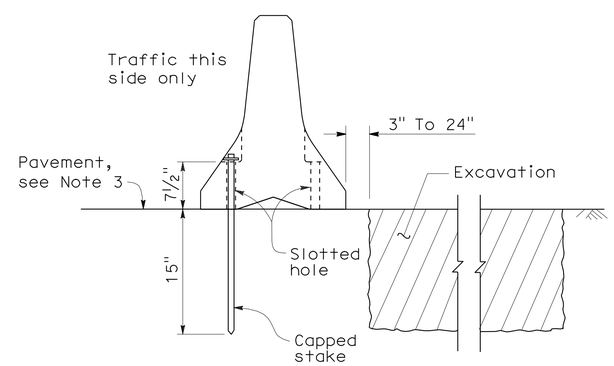

SECTION J-J

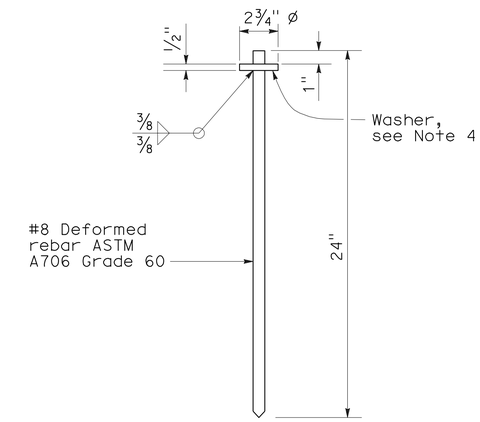

CAPPED STAKE DETAIL

STATE OF CALIFORNIA
DEPARTMENT OF TRANSPORTATION

TEMPORARY RAILING (TYPE K)

NO SCALE

NSP T3A DATED MAY 20, 2011 SUPPLEMENTS
THE STANDARD PLANS BOOK DATED MAY 2006.

NEW STANDARD PLAN NSP T3A

2006 NEW STANDARD PLAN NSP T3A

DIST	COUNTY	ROUTE	POST MILES TOTAL PROJECT	SHEET NO.	TOTAL SHEETS
12	Ora	405	5.0/5.6	83	92

REGISTERED CIVIL ENGINEER

November 17, 2006
PLANS APPROVAL DATE

REGISTERED PROFESSIONAL ENGINEER
Greg W. Edwards
No. C36386
Exp. 6-30-08
CIVIL
STATE OF CALIFORNIA

The State of California or its officers or agents shall not be responsible for the accuracy or completeness of electronic copies of this plan sheet.

To accompany plans dated 5-29-12

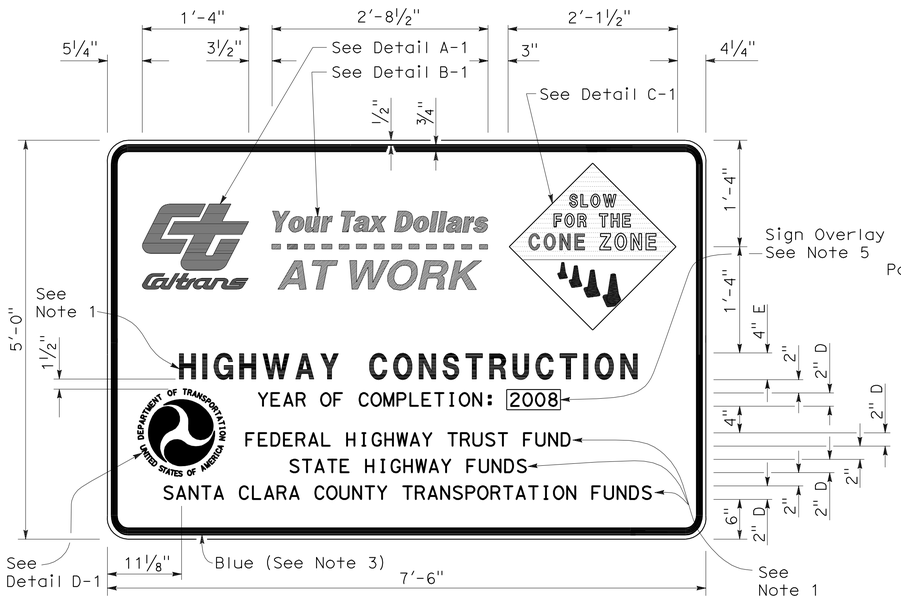

TYPE 1

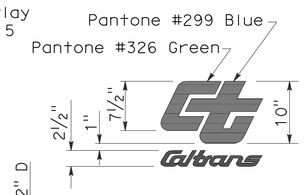

DETAIL A-1

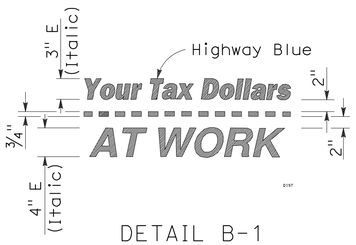

DETAIL B-1
(See Note 3)

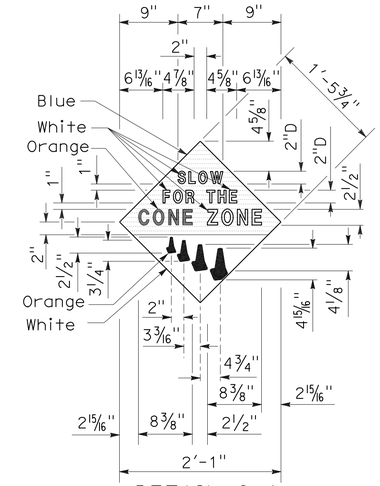

DETAIL C-1
(See Note 4)

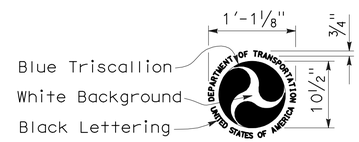

DETAIL D-1
(See Note 6)

NOTES:

1. The sign messages shown for type of project and fund types are examples only. See the Special Provisions for the applicable type of project and fund type messages to be used.
2. Except as otherwise shown, the legend of sign shall be black on a white background (non-reflective).
3. The border of the signs and details "B-1" and "B-2" shall be blue (non-reflective).
4. The diamond in details "C-1" and "C-2" shall be blue for the background of message, " SLOW FOR THE CONE ZONE", and white background for the orange cones. The color and type of font for the "SLOW FOR THE CONE ZONE" message shall be: "SLOW" white D; "FOR THE" white D; "CONE" orange Arial font; "ZONE" white Arial font.
5. Year of completion of project construction shown on the overlay is an example only. See the Special Provisions.
6. Use when the Project involves Federal Highway Trust Fund.

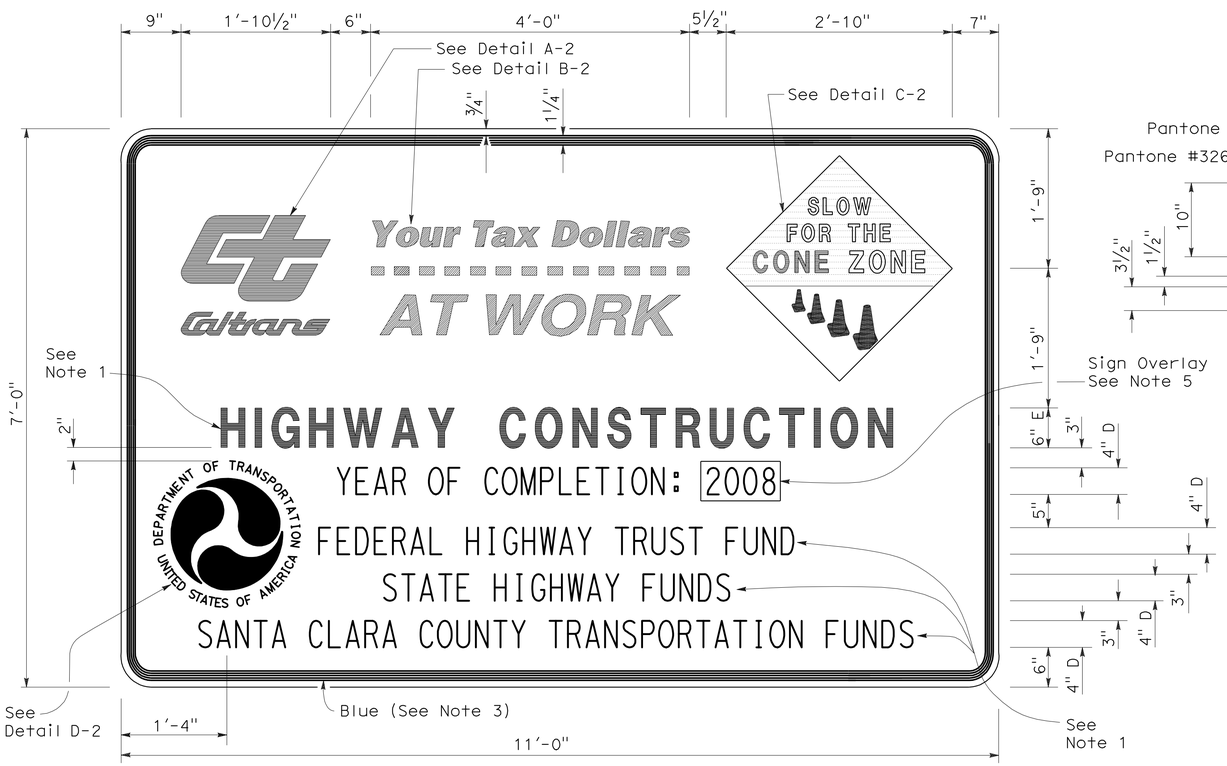

TYPE 2

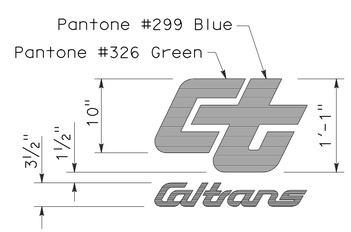

DETAIL A-2

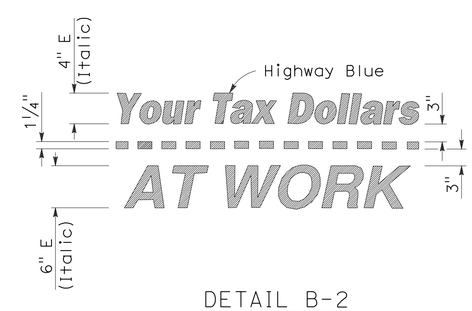

DETAIL B-2
(See Note 3)

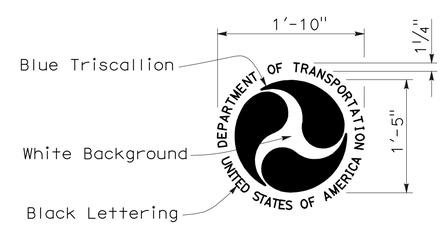

DETAIL D-2
(See Note 6)

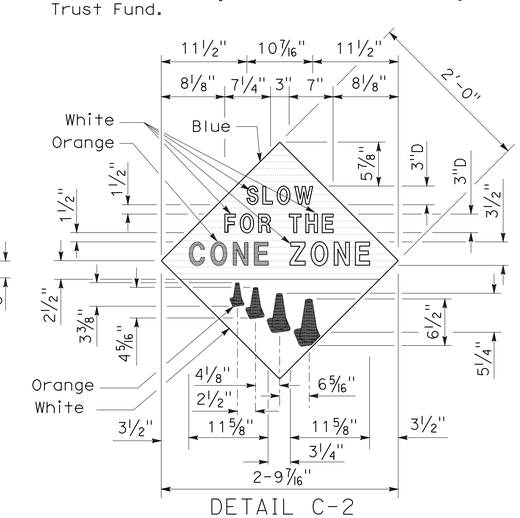

DETAIL C-2
(See Note 4)

STATE OF CALIFORNIA
DEPARTMENT OF TRANSPORTATION

CONSTRUCTION PROJECT FUNDING IDENTIFICATION SIGNS

NO SCALE

RSP T7 DATED NOVEMBER 17, 2006 SUPERSEDES STANDARD PLAN T7
DATED MAY 1, 2006 - PAGE 217 OF THE STANDARD PLANS BOOK DATED MAY 2006.

REVISED STANDARD PLAN RSP T7

2006 REVISED STANDARD PLAN RSP T7

9-7-06

DIST	COUNTY	ROUTE	POST MILES TOTAL PROJECT	SHEET NO.	TOTAL SHEETS
12	Ora	405	5.0/5.6	84	92

LICENSED LANDSCAPE ARCHITECT

April 3, 2009
PLANS APPROVAL DATE

The State of California or its officers or agents shall not be responsible for the accuracy or completeness of electronic copies of this plan sheet.

LICENSED LANDSCAPE ARCHITECT — Robert B. Schott — Signature — 11-30-10 Renewal Date — 2-25-09 Date — STATE OF CALIFORNIA

To accompany plans dated 5-29-12

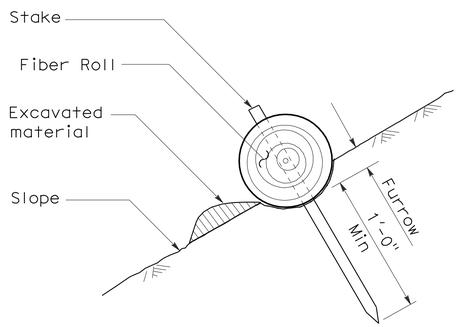

SECTION

TEMPORARY FIBER ROLL (TYPE 1)

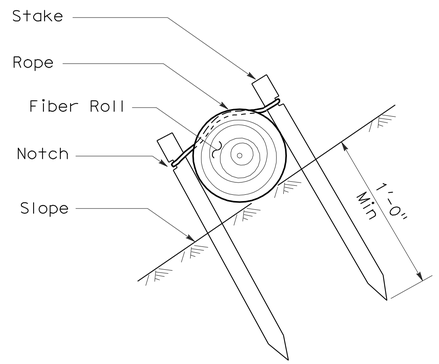

SECTION

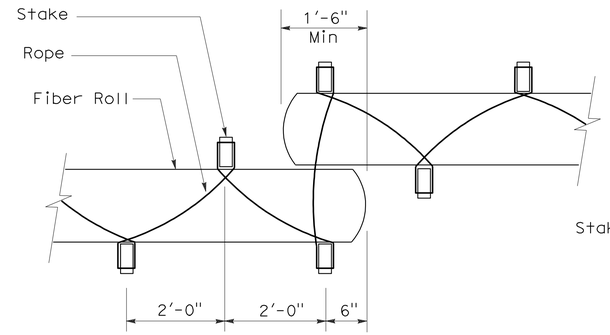

PLAN

TEMPORARY FIBER ROLL (TYPE 2)

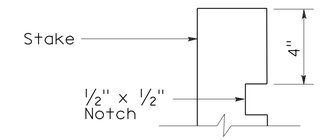

ELEVATION

STAKE NOTCH DETAIL

NOTES:

1. Temporary fiber roll spacing varies depending upon slope inclination.
2. Installations shown in the perspectives are for slope inclination of 10:1 and steeper.

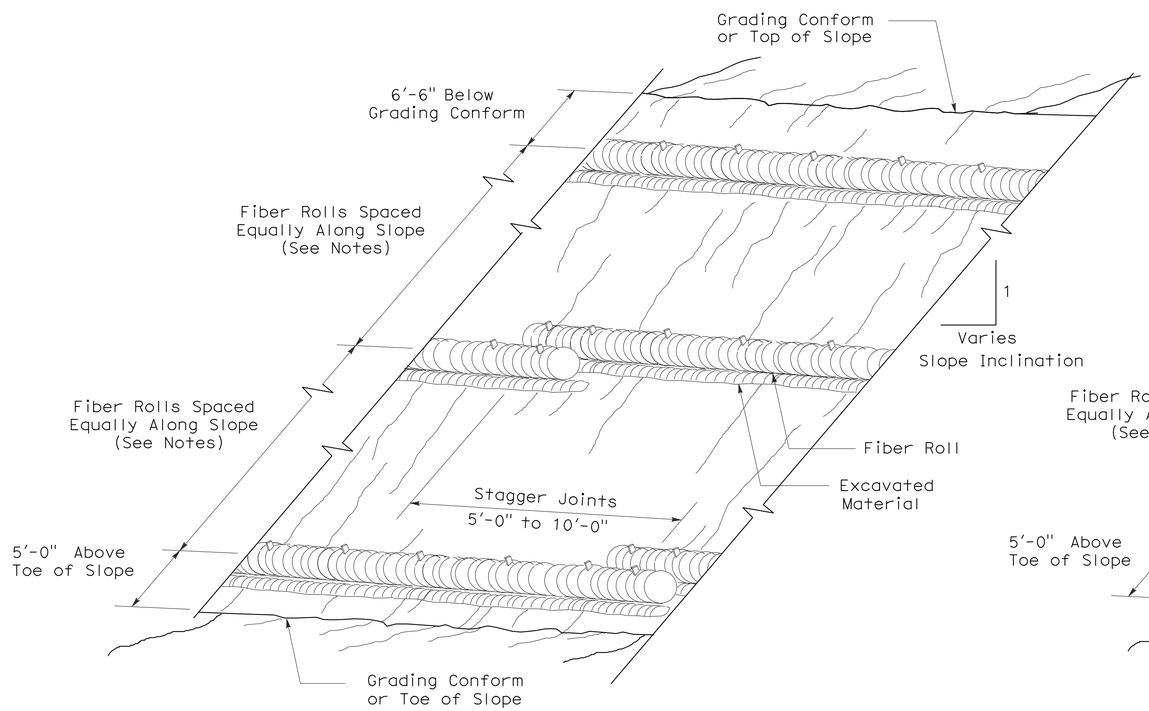

PERSPECTIVE

TEMPORARY FIBER ROLL (TYPE 1)

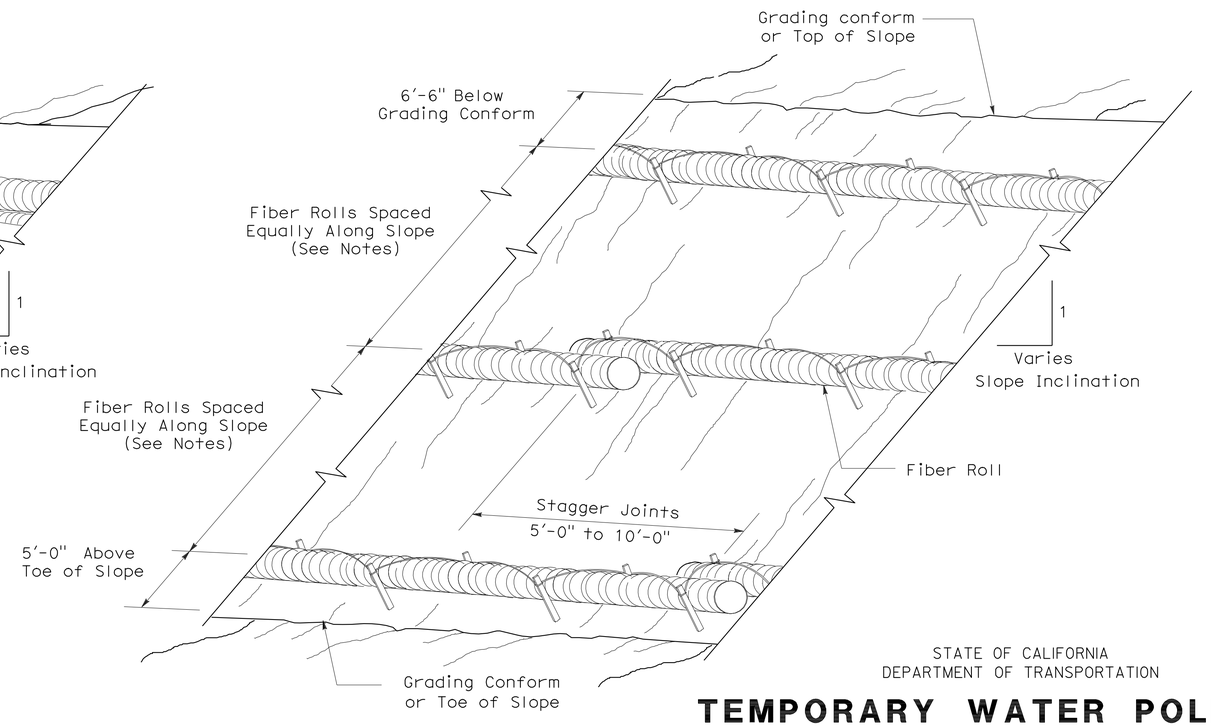

PERSPECTIVE

TEMPORARY FIBER ROLL (TYPE 2)

STATE OF CALIFORNIA
DEPARTMENT OF TRANSPORTATION

TEMPORARY WATER POLLUTION CONTROL DETAILS (TEMPORARY FIBER ROLL)

NO SCALE

RSP T56 DATED APRIL 3, 2009 SUPERSEDES STANDARD PLAN T56
DATED MAY 1, 2006 - PAGE 232 OF THE STANDARD PLANS BOOK DATED MAY 2006.

REVISED STANDARD PLAN RSP T56

2006 REVISED STANDARD PLAN RSP T56

2-23-09

DIST	COUNTY	ROUTE	POST MILES TOTAL PROJECT	SHEET NO.	TOTAL SHEETS
12	Ora	405	5.0/5.6	85	92

REGISTERED ELECTRICAL ENGINEER

October 5, 2007
PLANS APPROVAL DATE

REGISTERED PROFESSIONAL ENGINEER Jeffery G. McRae No. E14512 Exp. 6-30-08 ELECTRICAL STATE OF CALIFORNIA

The State of California or its officers or agents shall not be responsible for the accuracy or completeness of electronic copies of this plan sheet.

To accompany plans dated 5-29-12

ELECTROLIERS

STANDARD TYPES
15, 15D
15 STRUCTURE
21, 21D STRUCTURE
30
31
32
35
36-20A

High mast light pole

Double Arm lighting standard

Existing electrolier

Electrolier foundation (Future installation)

NOTES:

1. Luminaires shall be 310 W HPS when installed on Type 21, 21D, 30, 31, 32, 35 and 36-20A Standards, unless otherwise specified. Luminaires shall be 200 W HPS when installed on other type standards or poles, unless otherwise specified.
2. Luminaires shall be the cutoff type, ANSI Type Ⅲ medium cutoff lighting distribution, unless otherwise specified.
3. Variations noted adjacent to symbol on project plans.

Electrolier (see project notes or project plans)

Luminaire on wood pole

STANDARD NOTES:

- AB — Abandon. If applied to conduit, remove conductors.
- BC — Install pull box in existing conduit run.
- BP — Pedestrian barricade, type as indicated on plan.
- CB — Install conduit into existing pull box.
- CC — Connect new and existing conduit. Remove existing conductors and install conductors as indicated.
- CF — Conduit to remain for future use. Remove conductors. Install pull wire or rope.
- DH — Detector handhole.
- FA — Foundation to be abandoned.
- IS — Install sign on signal mast arm.
- NS — No slip base on standard.
- PEC — Photoelectric control.
- PEU — Photoelectric unit.
- RC — Equipment or material to be removed and become the property of the Contractor.
- RE — Remove electrolier, fuses and ballast. Tape ends of conductors.
- RL — Relocate equipment.
- RR — Remove and reuse equipment.
- RS — Remove and salvage equipment.
- SC — Splice new to existing conductors.
- SD — Service disconnect.
- SF — Standard to remain for future use. Remove luminaire, pole conductors, fuses and ballast.
- TSP — Telephone service point.

ABBREVIATIONS AND EQUIPMENT DESIGNATIONS

PROPOSED	EXISTING	
BBS	bbs	Battery backup system
BC	bc	Bolt circle
C	C	Conduit
CCTV	cctv	Closed circuit television
CKT	ckt	Circuit
CMS	cms	Changeable message sign
DLC	dlc	Loop detector lead-in cable
EMS	ems	Extinguishable message sign
EVC	evc	Emergency vehicle cable
EVD	evd	Emergency vehicle detector
FB	fb	Flashing beacon
FBCA	fbca	Flashing beacon control assembly
FBS	fbs	Flashing beacon with slip base
FO	fo	Fiber optic
G	G	Ground (Equipment Grounding Conductor)
GFCI	GFCI	Ground fault circuit interrupt
HAR	har	Highway advisory radio
HEX	hex	Hexagonal
HPS	hps	High pressure sodium
IISNS	iisns	Internally illuminated street name sign
ISL	isl	Induction sign lighting
LED	led	Light emitting diode
LMA	lma	Luminaire mast arm
LPS	lps	Low pressure sodium
LTG	ltg	Lighting
LUM	lum	Luminaire
MAT	mat	Mast arm mounting vehicle signal faces, top attachment
MAS	mas	Mast arm mounting vehicle signal faces, side attachment
MAS-4A	mas-4A	Mast arm mounting vehicle signal faces, side attachment - 4 signal section
MAS-4B	mas-4B	
MAS-4C	mas-4C	
MAS-5A	mas-5A	Mast arm mounting vehicle signal faces, side attachment - 5 signal section
MAS-5B	mas-5B	
MC	mc	Mercury contactor
M/M	m/m	Multiple to multiple transformer
MT	mt	Conduit with pull wire or rope only
MTG	mtg	Mounting
	mv	Mercury vapor lighting fixture
N	N	Neutral (Grounded Conductor)
NC	NC	Normally closed
NO	NO	Normally open
PB	pb	Pull box
PEC	pec	Photoelectric control (Type Ⅰ, Ⅱ, Ⅲ, Ⅳ or Ⅴ as shown)
PED	ped	Pedestrian
PEU	peu	Photoelectric unit
PPB	ppb	Pedestrian push button
RL		Relocated equipment
RM	rm	Ramp metering
SB	sb	Slip base
SIC	sic	Signal interconnect cable
SIG	sig	Signal
SMA	sma	Signal mast arm
SNS	sns	Street name sign
SP	sp	Service point
TDC	tdc	Telephone demarcation cabinet
TMS	tms	Traffic monitoring station
TOS	tos	Traffic Operations System
VEH	veh	Vehicle
XFMR	xfmr	Transformer
COMM	comm	Communication
RWIS	rwis	Roadway weather information system

SOFFIT AND WALL MOUNTED LUMINAIRES

Pendant, 70 W HPS unless otherwise specified.

Flush, 70 W HPS unless otherwise specified.

Wall surface, 70 W HPS unless otherwise specified.

Existing soffit or wall luminaire to remain unmodified.

Existing soffit or wall luminaire to be modified as specified.

NOTE:

Arrow indicates "street side" of luminaire.

STATE OF CALIFORNIA
DEPARTMENT OF TRANSPORTATION

ELECTRICAL SYSTEMS (SYMBOLS AND ABBREVIATIONS)

NO SCALE

RSP ES-1A DATED OCTOBER 5, 2007 SUPERSEDES STANDARD PLAN ES-1A DATED MAY 1, 2006 - PAGE 400 OF THE STANDARD PLANS BOOK DATED MAY 2006.

REVISED STANDARD PLAN RSP ES-1A

2006 REVISED STANDARD PLAN RSP ES-1A

DIST	COUNTY	ROUTE	POST MILES TOTAL PROJECT	SHEET NO.	TOTAL SHEETS
12	Ora	405	5.0/5.6	86	92

REGISTERED ELECTRICAL ENGINEER

October 5, 2007
PLANS APPROVAL DATE

REGISTERED PROFESSIONAL ENGINEER Jeffery G. McRae No. E14512 Exp. 6-30-08 ELECTRICAL STATE OF CALIFORNIA

The State of California or its officers or agents shall not be responsible for the accuracy or completeness of electronic copies of this plan sheet.

To accompany plans dated 5-29-12

CONDUIT

PROPOSED	EXISTING	
		Lighting Conduit, unless otherwise indicated or noted
		Traffic signal conduit
C	c	Communication conduit
T	t	Telephone conduit
F	f	Fire alarm conduit
FO	fo	Fiber optic conduit
		Conduit termination (RSP ES-9A C)
R	r	Conduit riser in/on structure or service pole

SERVICE EQUIPMENT

PROPOSED	EXISTING	
OH	oh	Overhead lines
U	U	Wood pole "U" indicates utility owned
		Pole guy with anchor
		Utility transformer - ground mounted
III		Service equipment enclosure type
		Service equipment enclosure door indicates front of enclosure
T	t	Telephone demarcation cabinet

POLE-MOUNTED SERVICE DESIGNATION

Type of installation

TYPE H SERVICE - 28'-10" ← Pole height above grade

ILLUMINATED OVERHEAD SIGN

PROPOSED	EXISTING	
		Overhead sign - Single post
		Overhead sign - Two post
		Overhead sign - Mounted on structure
		Overhead sign with electrolier

SIGNAL EQUIPMENT

PROPOSED	EXISTING	
		Pedestrian signal face
		Pedestrian push button post
		Pedestrian barricade
		Vehicle signal face (with backplate, 3-Section: red, yellow and green)
		Vehicle signal face with angle visors
PV	PV	Modifications of basic symbols: "L" indicates all non-arrow sections louvered "LG" indicates louvered green section only "PV" indicates 12" programmed visibility sections "8" indicates all 8" sections (only when specified)
		Type 15TS and Vehicle signal face
		Vehicle signal face with red, yellow and green left arrow sections
		Vehicle signal face with red and yellow sections and up green arrow
		Vehicle signal face (5 Section) with red, yellow and green sections and yellow and green right arrows
		Type 1 Standard and attached vehicle signal faces
		Standard with signal mast arm only and attached vehicle signal faces and internally illuminated street name sign
		Type 33 Standard, Left-turn vehicle signal face and sign
		Standard with luminaire and signal mast arms and attached vehicle signal faces
		Cantilever flashing beacon Type 9 Frame, with a sign unless otherwise specified or indicated
		Type 15-FBS Standard with two vehicle signal face sections with lens, backplate and visor with a sign
R	Y	Flashing beacon. One vehicle signal face section with lens, backplate and visor. "R" indicates red indication, "Y" indicates yellow indication
		Controller assembly. Door indicates front of cabinet

SIGNAL EQUIPMENT Cont

PROPOSED	EXISTING	
		Guard post
		Type 1 Standard with "Meter On" sign
		Emergency Vehicle detector

NOTES:

1. All signal sections shall be 12" unless shown otherwise.
2. Signal heads shall be provided with backplates unless shown otherwise.
3. Signal indication shall be LED.

STATE OF CALIFORNIA
DEPARTMENT OF TRANSPORTATION

ELECTRICAL SYSTEMS (SYMBOLS AND ABBREVIATIONS)

NO SCALE

RSP ES-1B DATED OCTOBER 5, 2007 SUPERCEDES STANDARD PLAN ES-1B DATED MAY 1, 2006 - PAGE 401 OF THE STANDARD PLANS BOOK DATED MAY 2006.

REVISED STANDARD PLAN RSP ES-1B

2006 REVISED STANDARD PLAN RSP ES-1B

DIST	COUNTY	ROUTE	POST MILES TOTAL PROJECT	SHEET NO.	TOTAL SHEETS
12	Ora	405	5.0/5.6	87	92

REGISTERED ELECTRICAL ENGINEER

October 5, 2007
PLANS APPROVAL DATE

REGISTERED PROFESSIONAL ENGINEER
Jeffery G. McRae
No. E14512
Exp. 6-30-08
ELECTRICAL
STATE OF CALIFORNIA

The State of California or its officers or agents shall not be responsible for the accuracy or completeness of electronic copies of this plan sheet.

To accompany plans dated 5-29-12

EQUIPMENT IDENTIFICATION

ILLUMINATED SIGN IDENTIFICATION NUMBER:

Sign No. 12345 — Sign number - Place on post or structure

10 ISL SCI 1.0

- 1.0 — Transformer rating (kVA)
- SCI — Lighting control type
- ISL — Number and type of fixtures

Do NOT place on standard or structure

ELECTROLIER OR EQUIPMENT IDENTIFICATION NUMBER:

12345 - 15'-0"

- 15'-0" — Mast arm length, if shown. Do not place on standard or structure.
- 12345 — Equipment number - Place on standard or structure. Existing equipment numbers are shown in parenthesis

CONDUIT AND CONDUCTOR IDENTIFICATION:

1½"C, 2#10, 15#14, 2 DLC

- 2#10, 15#14, 2 DLC — Number and size of conductors and cables
- 1½"C — Size of conduit in inches

Ø1, Ø2, Ø2P, etc.	Traffic phase identification for signal faces, detectors and phase diagrams
1 2 3	Project note numbers
A B C	Equipment description, installation or item numbers
1 2 3	Conduit run numbers

SIGNAL AND LIGHTING STANDARD (TYPICAL DESIGNATION):

19A - 3 - 100

- 100 — Wind velocity = 100 mph
- 3 — Case 3 arm loading
- 19A — Standard type
- Standard Plan sheet number
- Detail number or letter

MISCELLANEOUS EQUIPMENT

PROPOSED	EXISTING	
CMS	cms	Changeable message sign
		Closed circuit television camera
		Highway advisory radio pole and antenna
EMS	ems	Extinguishable message sign
M V	m v	Detection device M = Microwave sensor V = Video image sensor

WIRING DIAGRAM LEGEND

P	Pole
CB	Circuit breaker
A	Ampere
V	Volt
M	Metered
UM	Unmetered
NB	Neutral bus
GB	Ground bus
G	Equipment grounding conductor
N	Grounded conductor (Neutral)

- External conductor
- Conductor or bus
- Tie point
- Contactor coil
- Contactor, Contact NO
- Terminal blocks
- Contactor, Contact NC
- Enclosure bond
- Grounding electrode
- Circuit breaker
- Receptacle

PULL BOXES

PROPOSED EXISTING

Pull box-No. 5 unless otherwise indicated or noted.

3 — 9A(21)

Pull box-Additional designations or descriptions

3	= No. 3½ pull box
5	= No. 5 pull box
6	= No. 6 pull box
7	= No. 7 (Ceiling pull box)
8	= No. 8 (Pendant soffit pull box)
9	= No. 9 pull box
9A	= No. 9A pull box

(C) = Communications pull box
(E) = Pull box with extension
(S) = Sprinkler control pull box
(21) = Anchor bolts and conduit for future installation of Type 21 Standard
(T) = Traffic pull box

VEHICLE DETECTORS

5 J 9 U

- U = Upper
- L = Lower
- Slot number in input file
- Input file (I or J)
- Phase

PROPOSED	EXISTING	
		Type A detector loop. Outline of sawcut shown.
		Type B detector loop. Outline of sawcut shown.
		Type C detector loop. Outline of sawcut shown.
		Type D detector loop. Outline of sawcut shown.
		Type E detector loop. Outline of sawcut shown.
		Type Q detector loop. Outline of sawcut shown.
		Magnetic detector
DH	dh	Detector handhole
		Microwave or video detection zone

STATE OF CALIFORNIA
DEPARTMENT OF TRANSPORTATION

ELECTRICAL SYSTEMS (SYMBOLS AND ABBREVIATIONS)

NO SCALE

RSP ES-1C DATED OCTOBER 5, 2007 SUPERCEDES STANDARD PLAN ES-1C DATED MAY 1, 2006 - PAGE 402 OF THE STANDARD PLANS BOOK DATED MAY 2006.

REVISED STANDARD PLAN RSP ES-1C

2006 REVISED STANDARD PLAN RSP ES-1C

7-10-07

DIST	COUNTY	ROUTE	POST MILES TOTAL PROJECT	SHEET NO.	TOTAL SHEETS
12	Ora	405	5.0/5.6	88	92

REGISTERED ELECTRICAL ENGINEER

October 5, 2007
PLANS APPROVAL DATE

REGISTERED PROFESSIONAL ENGINEER Jeffery G. McRae No. E14512 Exp. 6-30-08 ELECTRICAL STATE OF CALIFORNIA

The State of California or its officers or agents shall not be responsible for the accuracy or completeness of electronic copies of this plan sheet.

To accompany plans dated 5-29-12

LOOP INSTALLATION PROCEDURE

1. Loops shall be centered in lanes.
2. Saw slots in pavement for loop conductors as shown in details.
3. Distance between side of loop and a lead-in saw cut from adjacent detectors shall be 2'-0" minimum. Distance between lead-in saw cuts shall be 6" minimum.
4. Bottom of saw slot shall be smooth with no sharp edges.
5. Slots shall be washed until clean, blown out and thoroughly dried before installing loop conductors.
6. Adjacent loops on the same sensor unit channel shall be wound in opposite directions.
7. Identify and tag loop circuit pairs in the pull box with loop number, start (S) and finish (F) of conductor. Identify and tag lead-in-cable with sensor number and phase.
8. Install loop conductor in slot using a 3/16" to 1/4" thick wood paddle. Hold loop conductors with wood paddles (at the bottom of the sawed slot) during sealant placement.
9. No more than 2 twisted pairs shall be installed in one sawed slot.
10. Allow additional 5'-0" of slack length of conductor for the lead-in run to pull box.
11. The additional length of each conductor for each loop shall be twisted together into a pair (6 turns per 3'-4" minimum) before being placed in the slot and conduit leading to pull box.
12. Test each loop circuit for continuity, circuit resistance and insulation resistance at the pull box before filling slots.
13. Fill slots as shown in details.
14. Splice loop conductors to lead-in-cable. Splices shall be soldered.
15. End of lead-in-cable and Type 2 loop conductor shall be waterproofed prior to installing in conduit to prevent moisture from entering the cable.
16. Lead-in-cable shall not be spliced between the pull box and the controller cabinet terminals.
17. Test each loop circuit for continuity, circuit resistance and insulation resistance at the controller cabinet location.
18. Where loop conductors are not to be spliced to a lead-in-cable, the ends of the conductors shall be taped and waterproofed with electrical insulating coating.

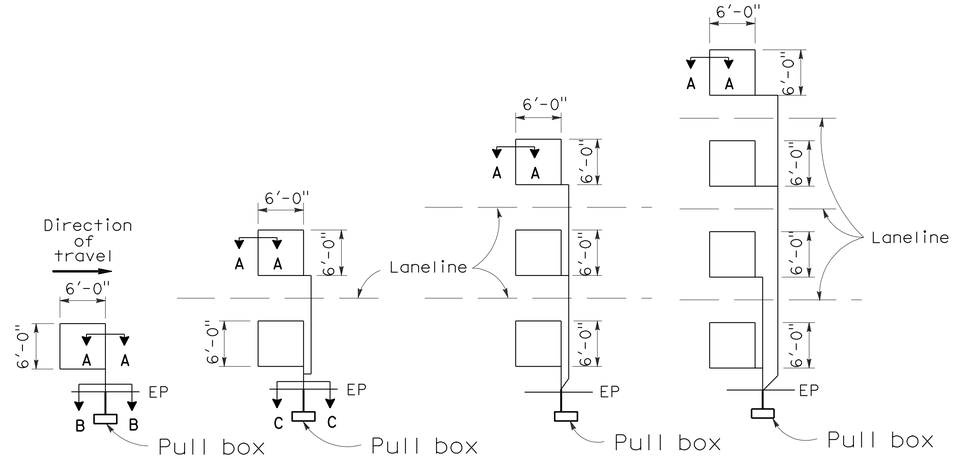

TYPE 1A INSTALLATION | TYPE 2A INSTALLATION | TYPE 3A INSTALLATION | TYPE 4A INSTALLATION

SAWCUT DETAILS

(Type A loop detector configurations illustrated)

1. 1A thru 4A = 1 Type A loop configuration in each lane.
2. 1B thru 4B = 1 Type B loop configuration in each lane.
3. 1C = 1 Type C loop configuration entering lanes as required.
4. 1D thru 4D = 1 Type D loop configuration in each lane.
5. 1E thru 4E = 1 Type E loop configuration in each lane.
6. 1Q thru 4Q = 1 Type Q loop configuration in each lane. (Use Type A, B, C, D, E or Q loop detector configurations only when specified or shown on plans)

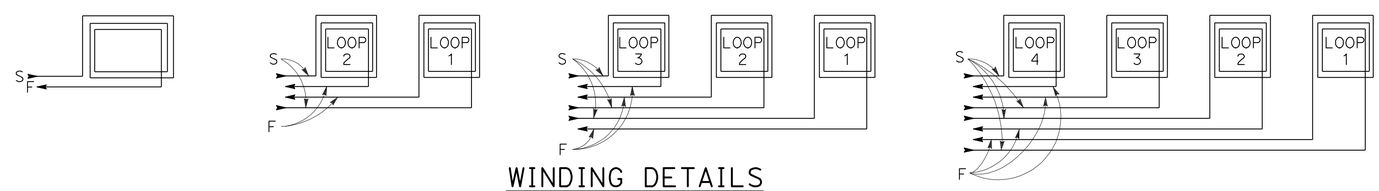

WINDING DETAILS

See Notes 6 and 7

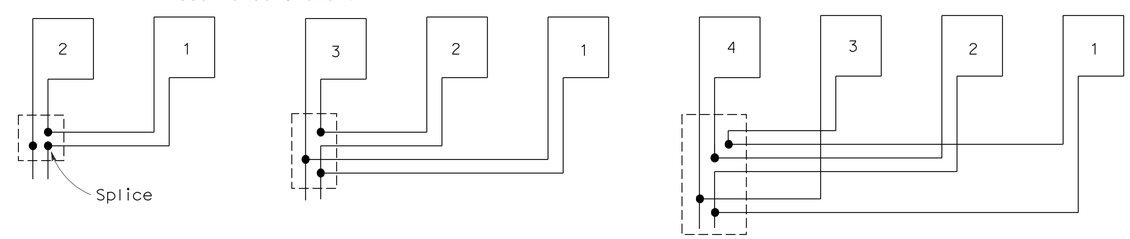

TYPICAL LOOP CONNECTIONS

(Dashed lines represent the pull box)

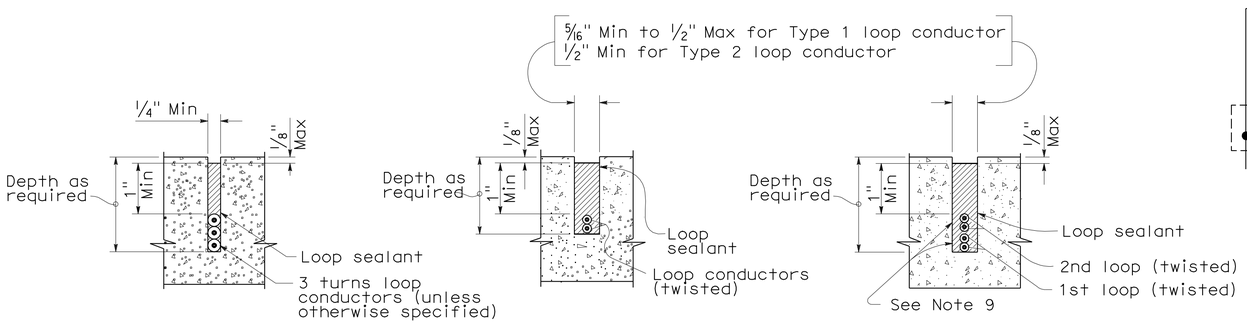

SECTION A-A | SECTION B-B | SECTION C-C

SLOT DETAILS - TYPE 1 AND TYPE 2 LOOP CONDUCTOR

STATE OF CALIFORNIA
DEPARTMENT OF TRANSPORTATION

ELECTRICAL SYSTEMS (DETECTORS)

NO SCALE

RSP ES-5A DATED OCTOBER 5, 2007 SUPERCEDES STANDARD PLAN ES-5A DATED MAY 1, 2006 - PAGE 423 OF THE STANDARD PLANS BOOK DATED MAY 2006.

REVISED STANDARD PLAN RSP ES-5A

2006 REVISED STANDARD PLAN RSP ES-5A

DIST	COUNTY	ROUTE	POST MILES TOTAL PROJECT	SHEET NO.	TOTAL SHEETS
12	Ora	405	5.0/5.6	89	92

REGISTERED CIVIL ENGINEER

January 18, 2008
PLANS APPROVAL DATE

REGISTERED PROFESSIONAL ENGINEER
Stanley P. Johnson
No. C57793
Exp. 03-31-08
CIVIL
STATE OF CALIFORNIA

The State of California or its officers or agents shall not be responsible for the accuracy or completeness of electronic copies of this plan sheet.

To accompany plans dated 5-29-12

LUMINAIRE ARM DATA

PROJECTED LENGTH	THICKNESS	MINIMUM OD @ POLE	MOUNTING HEIGHT
* 6'-0"	0.1196"	3¼"	36'-9"±
8'-0"		3½"	37'-3"±
10'-0"		3¾"	38'-0"±
12'-0"		3¾"	39'-0"±
15'-0"		4¼"	39'-6"±
** 20'-0"	0.1793"	5"	37'-0"±

* Type 30 - arm length 6'-0" - 15'-0" maximum
** Type 31 - arm lengths 20'-0"

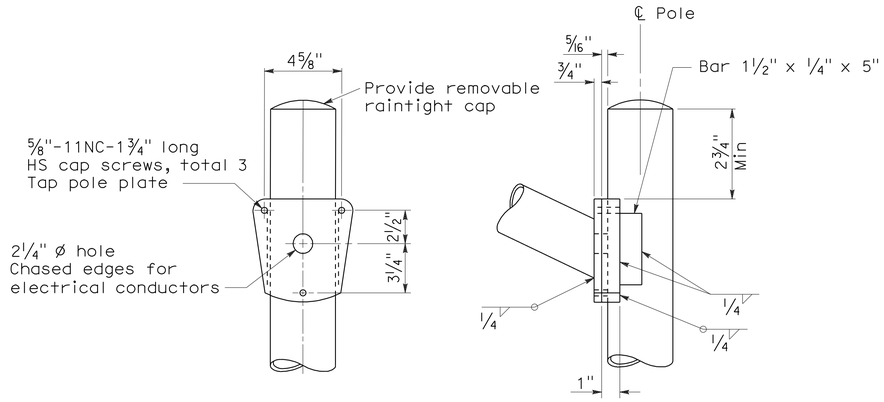

DETAIL A - TYPE 30

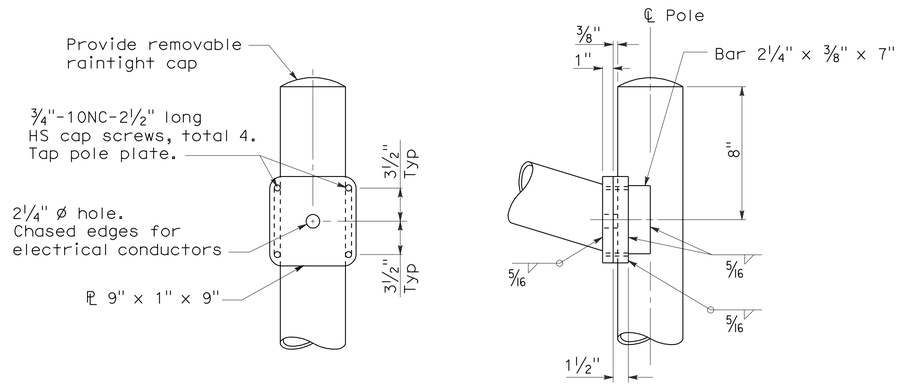

DETAIL A - TYPE 31

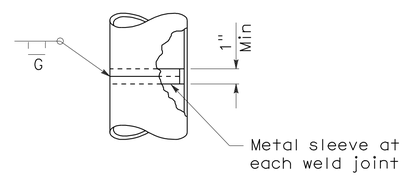

POLE SPLICE

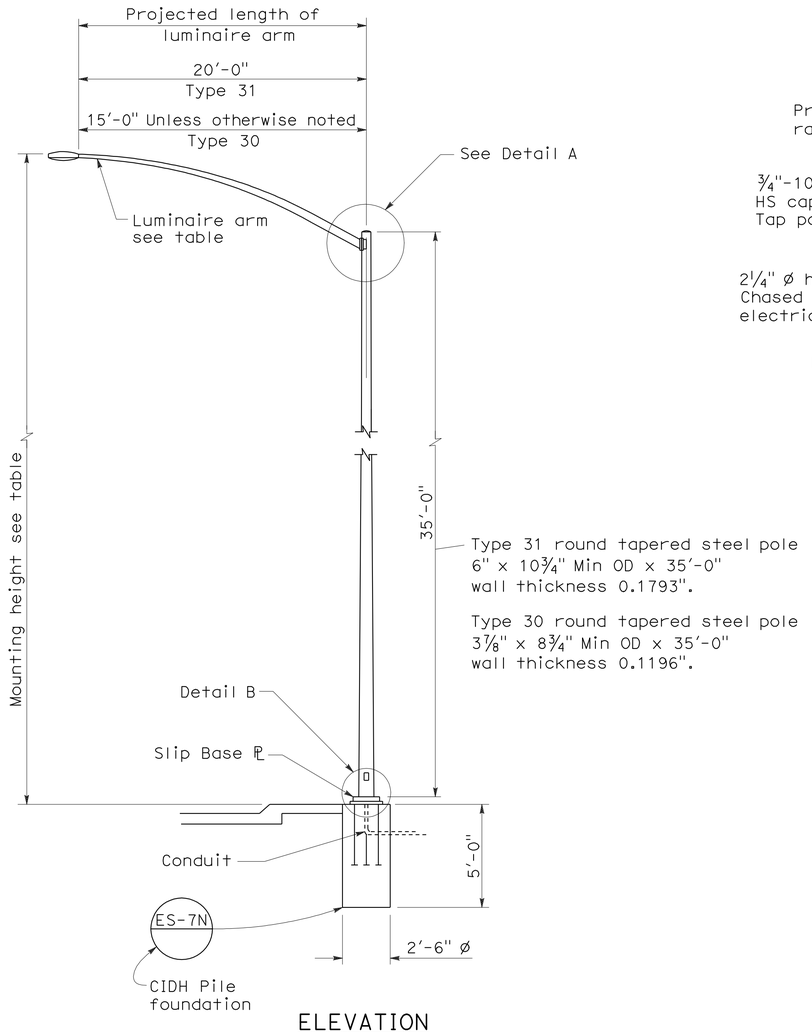

ELEVATION

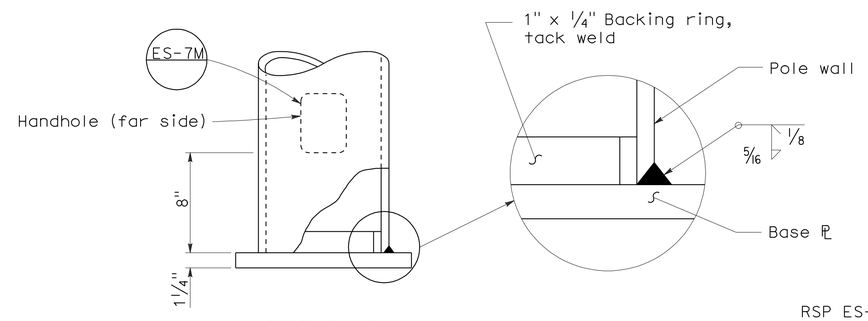

DETAIL B

NOTES:

1. Sheet steel shall have a minimum yield of 48,000 psi.
2. For slip base details see Standard Plan ES-6F.
3. For Type 30 fixed base use Type 15 base plate, and foundation shown on Revised Standard Plan RSP ES-6A. Use 1¼" Dia x 3'-6" x 4" anchor bolts.
4. For Type 31 fixed base use Type 32 base plate, anchor bolts and foundation on Standard Plan ES-6G.
5. Handhole shall be located on downstream side of traffic unless noted otherwise on plans.
6. For additional general notes refer to Standard Plan ES-7M.

STATE OF CALIFORNIA
DEPARTMENT OF TRANSPORTATION

ELECTRICAL SYSTEMS (LIGHTING STANDARD TYPES 30 AND 31)

NO SCALE

RSP ES-6E DATED JANUARY 18, 2008 SUPERCEDES STANDARD PLAN ES-6E DATED MAY 1, 2006 - PAGE 430 OF THE STANDARD PLANS BOOK DATED MAY 2006.

REVISED STANDARD PLAN RSP ES-6E

2006 REVISED STANDARD PLAN RSP ES-6E

11-19-07

DIST	COUNTY	ROUTE	POST MILES TOTAL PROJECT	SHEET NO.	TOTAL SHEETS
12	Ora	405	5.0/5.6	90	92

REGISTERED ELECTRICAL ENGINEER

January 20, 2012
PLANS APPROVAL DATE

REGISTERED PROFESSIONAL ENGINEER Jeffery G. McRae No. E14512 Exp. 6-30-12 ELECTRICAL STATE OF CALIFORNIA

The State of California or its officers or agents shall not be responsible for the accuracy or completeness of electronic copies of this plan sheet.

To accompany plans dated 5-29-12

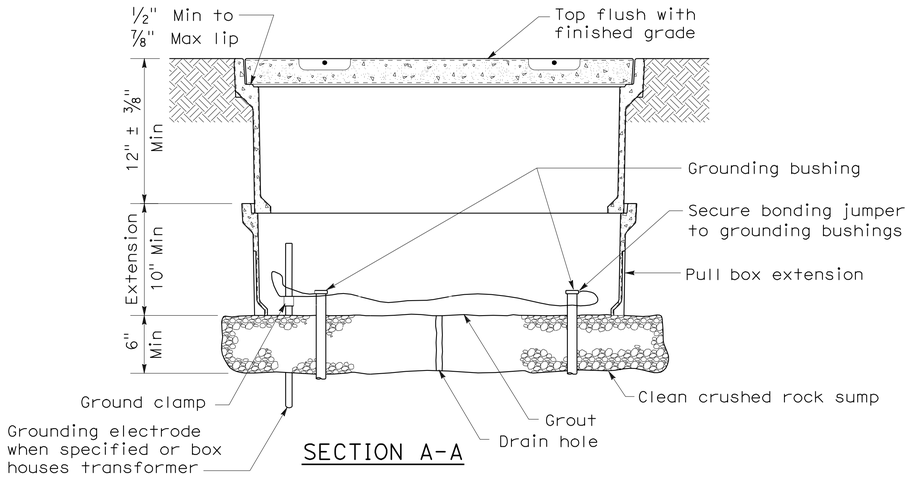

SECTION A-A

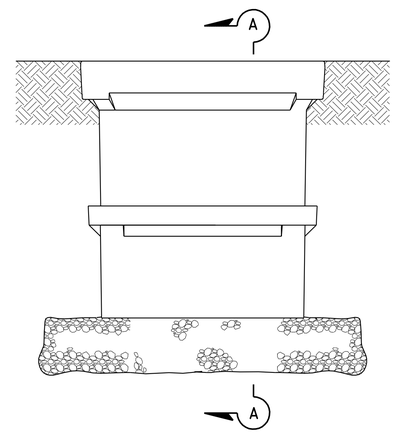

SIDE VIEW

INSTALLATION DETAILS

DETAIL A

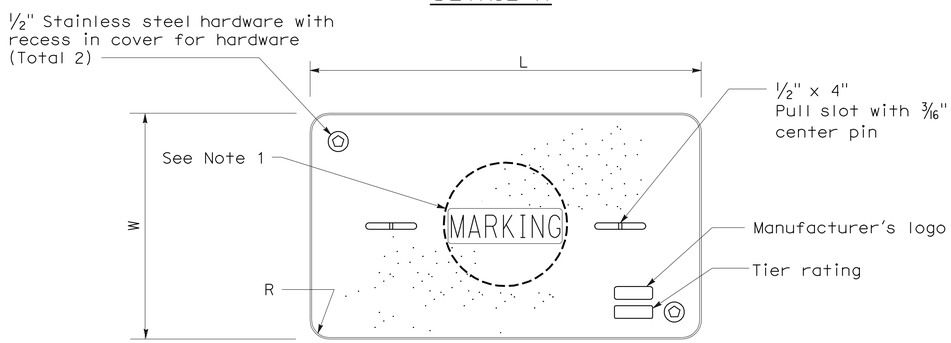

COVER TOP VIEW

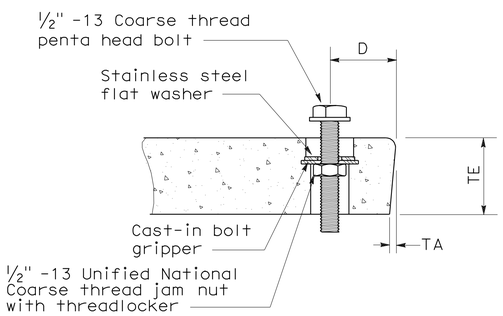

TYPICAL COVER CAPTIVE BOLT

(Or similar)

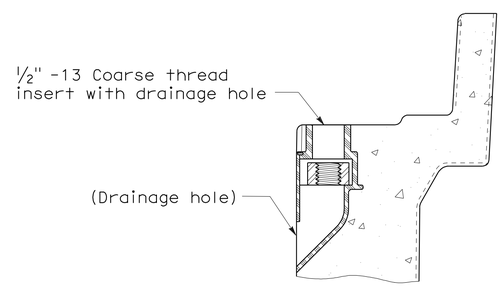

TYPICAL THREADED INSERT

(Or similar)

DIMENSION TABLE										
PULL BOX	PULL BOX			COVER						
	Minimum Depth Box	Minimum Depth Extension	Maximum Weight	L	W	R	TE	TA	D	Maximum Weight
No. 3 1/2	12"	N/A	40 lb	1' - 3 3/8"	10 1/8"	1 3/8"	2"	1/8"	1 3/4"	30 lb
No. 5	12"	10"	55 lb	1' - 11 1/4"	1' - 1 3/4"	1 3/8"	2"	1/8"	1 3/4"	60 lb
No. 6	12"	10"	70 lb	2' - 6 1/2"	1' - 5 1/2"	1 3/8"	2"	1/8"	2"	85 lb

NOTES ON PULL BOXES:

1. Pull box covers must be marked as follows: "SERVICE" Service circuits between service point and service disconnect; "SPRINKLER-CONTROL" sprinkler control circuits, 50 V or less; "CALTRANS" on all pull boxes, except pull boxes marked "SPRINKLER-CONTROL"; and "TELEPHONE" Telephone service;

   A) No. 3 1/2 pull box.
      1) "SIGNAL" - Traffic signal circuits with or without street or sign lighting circuits.
      2) "ST LIGHTING" - Street or sign lighting circuits where voltage is under 600 V.

   B) No. 5, 6, 9 or 9A pull box.
      1) "TRAFFIC SIGNAL" - Traffic signal circuits with or without street or sign lighting circuits.
      2) "STREET LIGHTING" - Street or sign lighting circuits where voltage is under 600 V.
      3) "STREET LIGHTING-HIGH VOLTAGE" - Street or sign lighting circuits where voltage is above 600 V.
      4) "IRRIGATION" - Circuits to irrigation controller 120 V or more.
      5) "RAMP METER" - Ramp meter circuits.
      6) "COUNT STATION" - Count or speed monitor circuits.
      7) "COMMUNICATIONS" - Communication circuits.
      8) "TOS COMMUNICATIONS" - TOS communication line.
      9) "TOS POWER" -TOS power.
      10) "TDC POWER" - Telephone demarcation cabinet power.
      11) "CCTV" - Closed circuit television circuits.
      12) "TMS" - Traffic monitoring station circuits.
      13) "CMS" - Changeable message sign circuits.
      14) "HAR" - Highway advisory radio circuits.

2. The nominal dimensions of the opening in which the cover sets must be the same as the cover dimensions (L and W) plus 1/8" or greater.

3. Covers and boxes must be interchangeable with California Standard. When interchanged with a standard, the top surfaces must be flush within 1/8". Top outside radius of covers and pull boxes must have a 1/8" radius.

4. Pull box extension may be another pull box as long as the bottom edge of the pull box can fit into the cover opening.

STATE OF CALIFORNIA
DEPARTMENT OF TRANSPORTATION

ELECTRICAL SYSTEMS (PULL BOX)

NO SCALE

NSP ES-8A DATED JANUARY 20, 2012 SUPPLEMENTS THE STANDARD PLANS BOOK DATED MAY 2006.

NEW STANDARD PLAN NSP ES-8A

2006 NEW STANDARD PLAN NSP ES-8A

9-28-11

DIST	COUNTY	ROUTE	POST MILES TOTAL PROJECT	SHEET NO.	TOTAL SHEETS
12	Ora	405	5.0/5.6	91	92

REGISTERED ELECTRICAL ENGINEER

January 20, 2012
PLANS APPROVAL DATE

REGISTERED PROFESSIONAL ENGINEER Jeffery G. McRae No. E14512 Exp. 6-30-12 ELECTRICAL STATE OF CALIFORNIA

The State of California or its officers or agents shall not be responsible for the accuracy or completeness of electronic copies of this plan sheet.

To accompany plans dated 5-29-12

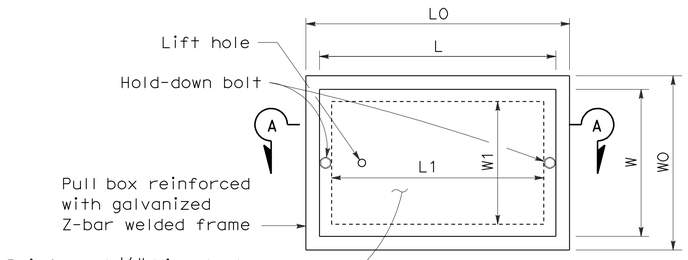

TOP VIEW

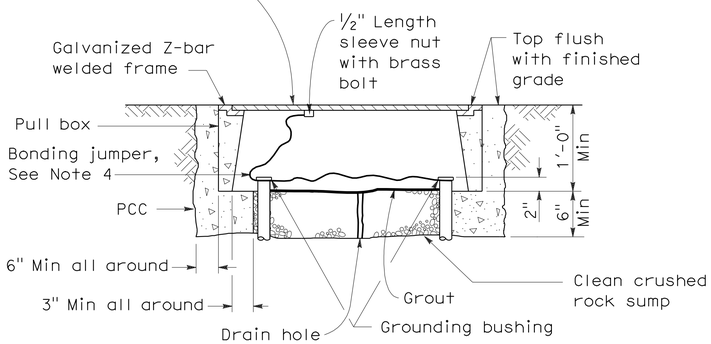

SECTION A-A

No. 3½(T), No. 5(T) AND No. 6(T) TRAFFIC PULL BOX

NOTES ON PULL BOXES:

1. Traffic pull box shall be provided with steel cover and special concrete footing. Steel cover shall have embossed non-skid pattern.
2. Steel reinforcing shall be as regularly used in the standard products of the respective manufacturer.
3. Pull box covers must be marked as follows: "SERVICE" Service circuits between service point and service disconnect; "SPRINKLER-CONTROL" Sprinkler control circuits, 50 V or less; "CALTRANS" On all pull boxes, except pull boxes marked "SPRINKLER-CONTROL"; and "TELEPHONE" Telephone service.
   A) No. 3½(T) pull box.
      1) "SIGNAL" - Traffic signal circuits with or without street or sign lighting circuits.
      2) "ST LIGHTING" - Street or sign lighting circuits where voltage is under 600 V.
   B) No. 5(T) or 6(T) pull box.
      1) "TRAFFIC SIGNAL" - Traffic signal circuits with or without street or sign lighting circuits.
      2) "STREET LIGHTING" - Street or sign lighting circuits where voltage is under 600 V.
      3) "STREET LIGHTING-HIGH VOLTAGE" - Street or sign lighting circuits where voltage is above 600 V.
      4) "IRRIGATION" - Circuits to irrigation controller 120 V or more.
      5) "RAMP METER" - Ramp meter circuits.
      6) "COUNT STATION" - Count or speed monitor circuits.
      7) "COMMUNICATION" - Communication circuits.
      8) "TOS COMMUNICATIONS" - TOS communications line.
      9) "TOS POWER" - TOS power.
      10) "TDC POWER" - Telephone demarcation cabinet power.
      11) "CCTV" - Closed circuit television circuits.
      12) "TMS" - Traffic monitoring station circuits.
      13) "CMS" - Changeable message sign circuits.
      14) "HAR" - Highway advisory radio circuits.
4. Bonding jumper for metal covers shall be 3' long, minimum.
5. The nominal dimensions of the opening in which the cover sets must be the same as the cover dimensions except the length and width dimensions shall be ⅛" greater.
6. Covers and boxes must be interchangeable with California standard male and female gages. When interchanged with a standard male or female gage, the top surfaces must be flush within ⅛".

DIMENSION TABLE

PULL BOX	BOX						COVER				
	Minimum * Thickness	Minimum Depth Box and Extension	WO	LO	L1	W1	L **	W **	R	Edge Thickness	Edge Taper
No. 3½(T)	1½"	1'-0"	1'-5"± 1"	1'-8⅞"±	1'-2½"±	10⅝"± 1"	1'-8"±	1'-1¾"±	0"	½"	None
No. 5(T)	1¾"	1'-0"	1'-11½"± 1"	2'-5½"±	1'-7"±	1'-1"± 1"	2'-3"±	1'-4"±	0"	½"	None
No. 6(T)	2"	1'-0"	2'-6"± 1"	2'-11½"±	1'-11½"±	1'-5"± 1"	2'-9"±	1'-8"±	0"	½"	None

* Excluding conduit web ** Top dimension

STATE OF CALIFORNIA
DEPARTMENT OF TRANSPORTATION

ELECTRICAL SYSTEMS (TRAFFIC RATED PULL BOX)

NO SCALE

NSP ES-8B DATED JANUARY 20, 2012 SUPPLEMENTS THE STANDARD PLANS BOOK DATED MAY 2006.

NEW STANDARD PLAN NSP ES-8B

2006 NEW STANDARD PLAN NSP ES-8B

DIST	COUNTY	ROUTE	POST MILES TOTAL PROJECT	SHEET NO.	TOTAL SHEETS
12	Ora	405	5.0/5.6	92	92

REGISTERED ELECTRICAL ENGINEER

October 5, 2007
PLANS APPROVAL DATE

REGISTERED PROFESSIONAL ENGINEER Jeffery G. McRae No. E14512 Exp. 6-30-08 ELECTRICAL STATE OF CALIFORNIA

The State of California or its officers or agents shall not be responsible for the accuracy or completeness of electronic copies of this plan sheet.

To accompany plans dated 5-29-12

NOTES: (FOR LIGHTING AND SIGN ILLUMINATION CONTROL)

1. The ballast voltages of lighting fixtures and luminaires shall match line service voltages.
2. Voltage rating of photoelectric controls shall conform to the service voltage indicated on the plans.
3. Terminal strip shall be provided for wiring to fixtures.
4. Type SC1A, SC2A, SC3A controls are similar to Types SC1, SC2 and SC3 controls respectively except test switch and wiring are not required.

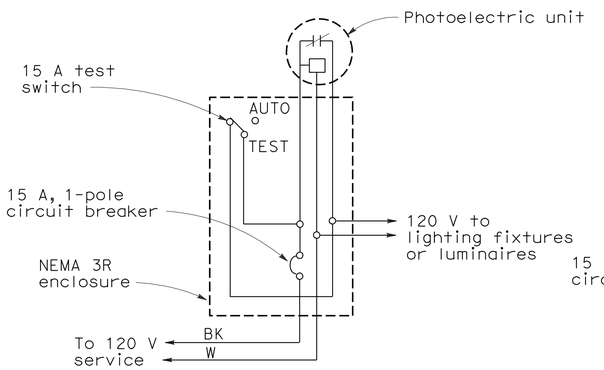

TYPE LC1 CONTROL

For 120 V unswitched circuit with no more than 800 W load.

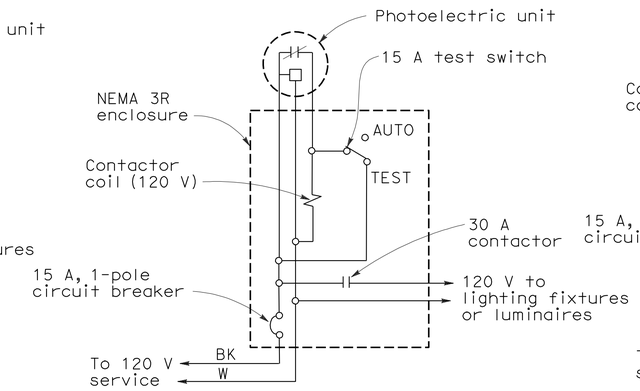

TYPE LC2 CONTROL

For 120 V unswitched circuit

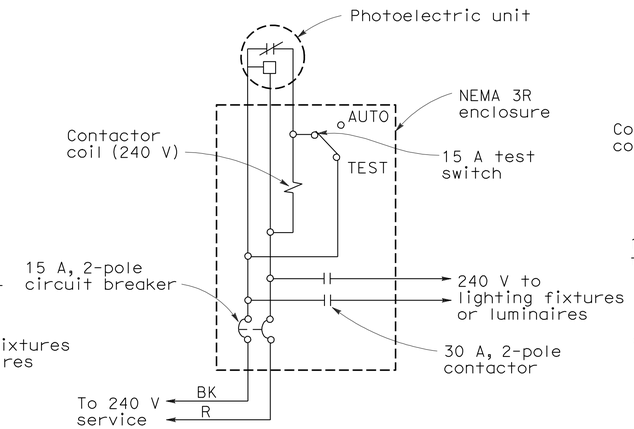

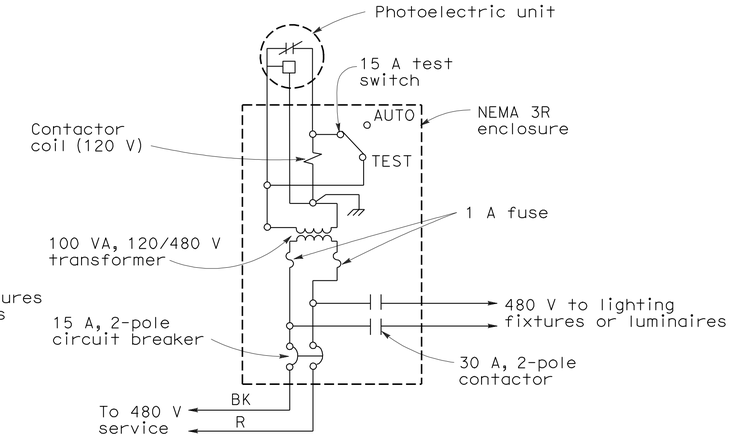

TYPE LC3 CONTROL

For 240 V and 480 V unswitched circuits

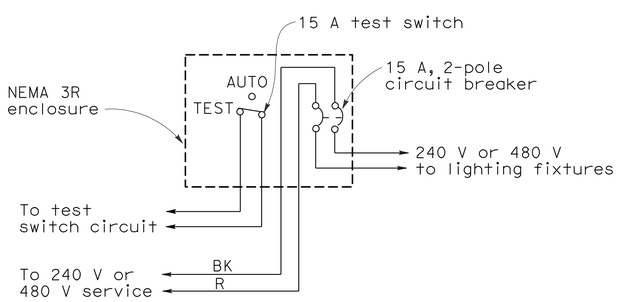

TYPE SC1 CONTROL

For 240 V or 480 V switched circuit, see Note 4 for Type SC1A

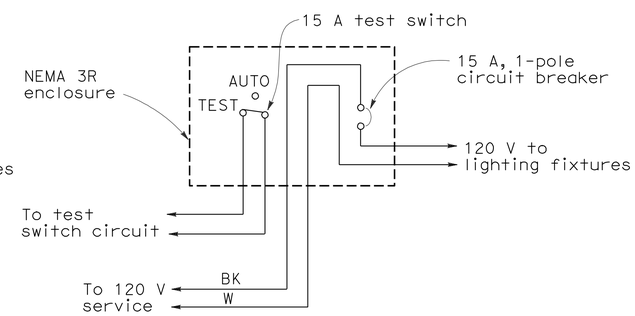

TYPE SC2 CONTROL

For 120 V switched circuit, see Note 4 for Type SC2A

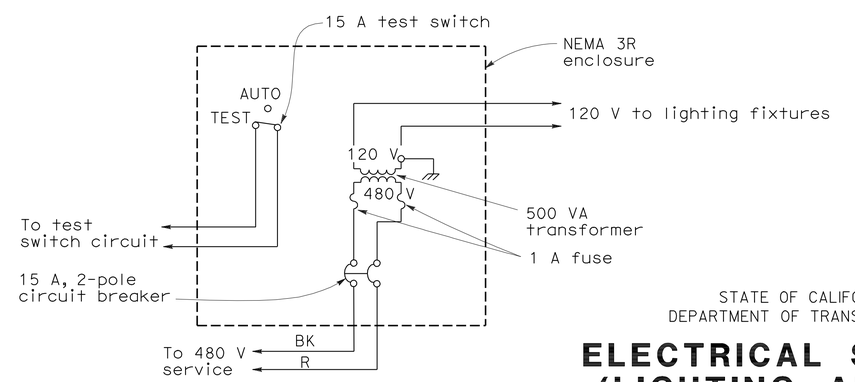

TYPE SC3 CONTROL

For 480 V switched sign circuit, see Note 4 for Type SC3A

STATE OF CALIFORNIA
DEPARTMENT OF TRANSPORTATION

ELECTRICAL SYSTEMS (LIGHTING AND SIGN ILLUMINATION CONTROL)

NO SCALE

RSP ES-15D DATED OCTOBER 5, 2007 SUPERCEDES STANDARD PLAN ES-15D DATED MAY 1, 2006 - PAGE 472 OF THE STANDARD PLANS BOOK DATED MAY 2006.

REVISED STANDARD PLAN RSP ES-15D

2006 REVISED STANDARD PLAN RSP ES-15D