Dist	COUNTY	ROUTE	POST MILES TOTAL PROJECT	SHEET No.	TOTAL SHEETS
12	Ora	39	18.3/22.6	1	20

STATE OF CALIFORNIA

DEPARTMENT OF TRANSPORTATION

PROJECT PLANS FOR CONSTRUCTION ON

STATE HIGHWAY

IN ORANGE COUNTY
IN LA HABRA
AT VARIOUS LOCATIONS
FROM 0.3 MILE SOUTH OF ROUTE 90
TO 0.1 MILE WEST OF HARBOR BOULEVARD

TO BE SUPPLEMENTED BY STANDARD PLANS DATED MAY 2006

INDEX OF PLANS

SHEET No.	DESCRIPTION
1	TITLE AND LOCATION MAP
2-8	DRAINAGE PLANS, PROFILES, DETAILS AND QUANTITIES
9-12	UTILITY PLANS
13	CONSTRUCTION AREA SIGNS
14-20	REVISED AND NEW STANDARD PLANS

THE STANDARD PLANS LIST APPLICABLE TO THIS CONTRACT IS INCLUDED IN THE NOTICE TO BIDDERS AND SPECIAL PROVISIONS BOOK.

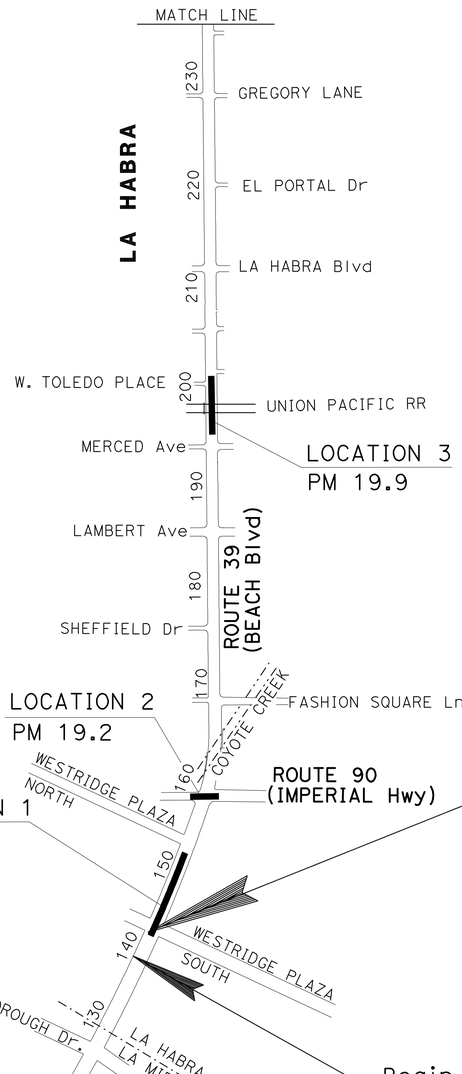

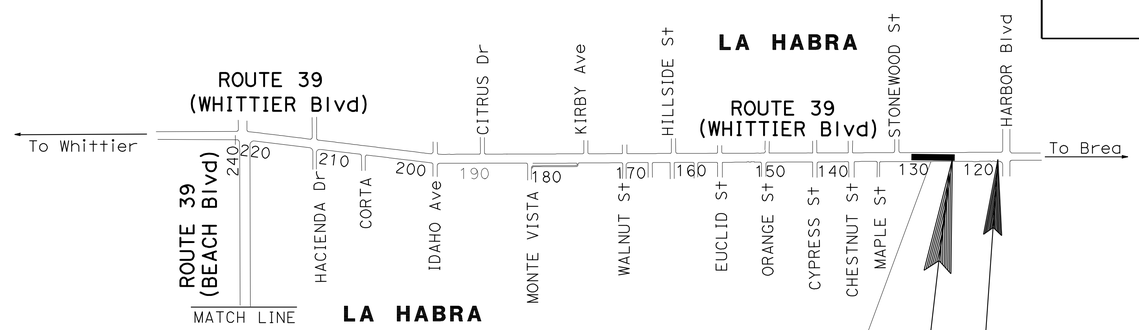

BEGIN CONSTRUCTION (ROUTE 39)
Sta 144+42 PM 18.3

END CONSTRUCTION (ROUTE 39)
Sta 130+60 PM 22.6

Begin Work (Route 39)
Sta 140+00

NO SCALE

LOCATION MAP

Caltrans

PROJECT MANAGER: VINH PHAM

DESIGN ENGINEER: NAM TU DAO

Nam Tu Dao 01-04-11
PROJECT ENGINEER REGISTERED CIVIL ENGINEER — DATE

REGISTERED PROFESSIONAL ENGINEER — NAM TU DAO — No. C 30349 — Exp. 3-31-12 — CIVIL — STATE OF CALIFORNIA

February 14, 2011
PLANS APPROVAL DATE

THE STATE OF CALIFORNIA OR ITS OFFICERS OR AGENTS SHALL NOT BE RESPONSIBLE FOR THE ACCURACY OR COMPLETENESS OF SCANNED COPIES OF THIS PLAN SHEET.

THE CONTRACTOR SHALL POSSESS THE CLASS (OR CLASSES) OF LICENSE AS SPECIFIED IN THE "NOTICE TO BIDDERS."

CONTRACT No.	12-0L1304
PROJECT ID	1200020055

LAST REVISION 12-23-10

DATE PLOTTED => 18-FEB-2011
TIME PLOTTED => 13:48

Dist	COUNTY	ROUTE	POST MILES TOTAL PROJECT	SHEET No.	TOTAL SHEETS
12	Ora	39	18.3/22.6	2	20

REGISTERED CIVIL ENGINEER 01-04-11 DATE

2-14-11
PLANS APPROVAL DATE

REGISTERED PROFESSIONAL ENGINEER NAM TU DAO No. C 30349 Exp. 3/31/12 CIVIL STATE OF CALIFORNIA

THE STATE OF CALIFORNIA OR ITS OFFICERS OR AGENTS SHALL NOT BE RESPONSIBLE FOR THE ACCURACY OR COMPLETENESS OF SCANNED COPIES OF THIS PLAN SHEET.

NOTES:

1. FOR COMPLETE RIGHT OF WAY AND ACCURATE ACCESS DATA, SEE RIGHT OF WAY RECORD MAPS AT DISTRICT OFFICE.
2. EXACT MANHOLE LOCATIONS TO BE DETERMINED BY ENGINEER.
3. CIPP LINER SHALL BEGIN OR END AT DRAINAGE INLETS OR MANHOLES UNLESS OTHERWISE NOTED.

LEGENDS:

(X) DRAINAGE SYSTEM NO.

(X) DRAINAGE UNIT

☐ TEMPORARY DRAINAGE INLET PROTECTION

ABBREVIATIONS:

CIPP CURED IN PLACE PIPE
CMPA CORRUGATED METAL PIPE ARCH

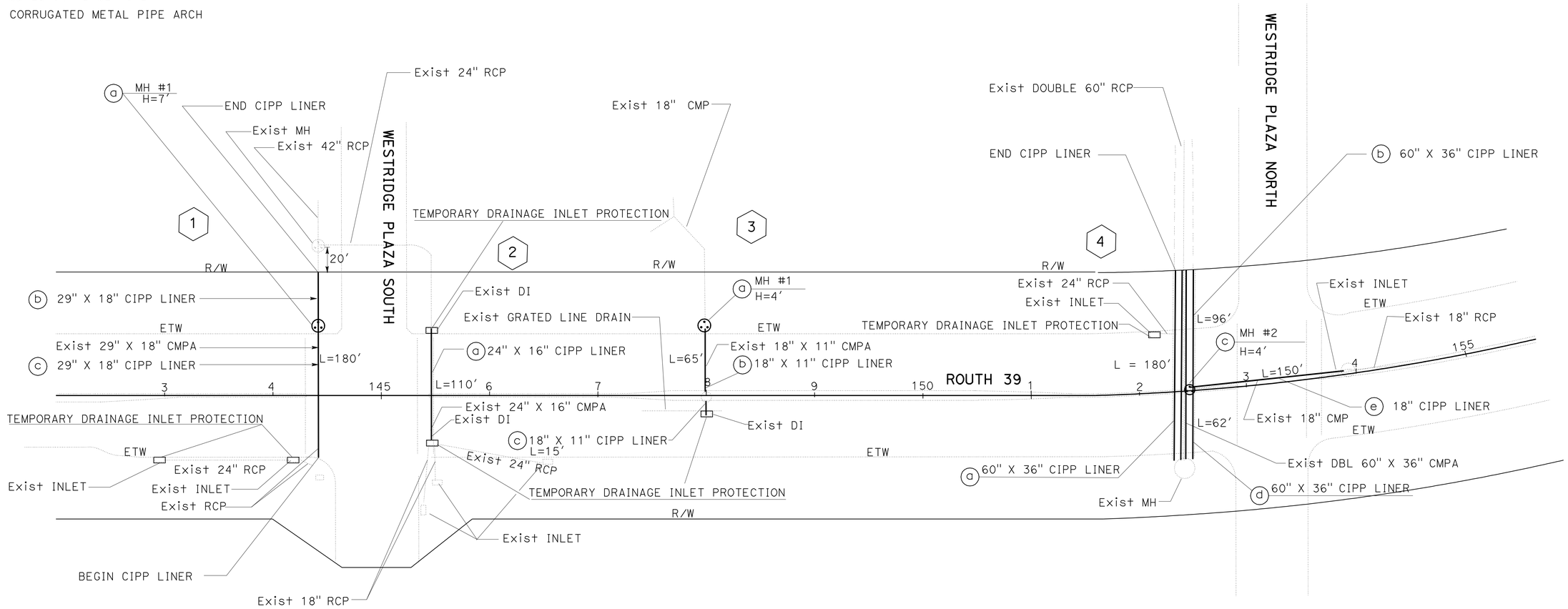

THIS PLAN ACCURATE FOR DRAINAGE WORK ONLY

DRAINAGE PLAN

SCALE: 1" = 50′

D-1

REVISED BY	NAM TU DAO
DATE REVISED	12-09-10
CALCULATED-DESIGNED BY	RAMPHA REAO
CHECKED BY	NAM TU DAO
FUNCTIONAL SUPERVISOR	MILI LIM STAMATION

STATE OF CALIFORNIA - DEPARTMENT OF TRANSPORTATION
Caltrans
DESIGN DIVISION

LAST REVISION 01-03-11
DATE PLOTTED => 18-FEB-2011
TIME PLOTTED => 13:49

Dist	COUNTY	ROUTE	POST MILES TOTAL PROJECT	SHEET No.	TOTAL SHEETS
12	Ora	39	18.3/22.6	3	20

Nam Tu Dao 01-04-11
REGISTERED CIVIL ENGINEER DATE

2-14-11
PLANS APPROVAL DATE

THE STATE OF CALIFORNIA OR ITS OFFICERS OR AGENTS SHALL NOT BE RESPONSIBLE FOR THE ACCURACY OR COMPLETENESS OF SCANNED COPIES OF THIS PLAN SHEET.

REGISTERED PROFESSIONAL ENGINEER
NAM TU DAO
No. C 30349
Exp. 3/31/12
CIVIL
STATE OF CALIFORNIA

NOTE:

FOR COMPLETE RIGHT OF WAY AND ACCURATE ACCESS DATA, SEE RIGHT OF WAY RECORD MAPS AT DISTRICT OFFICE.

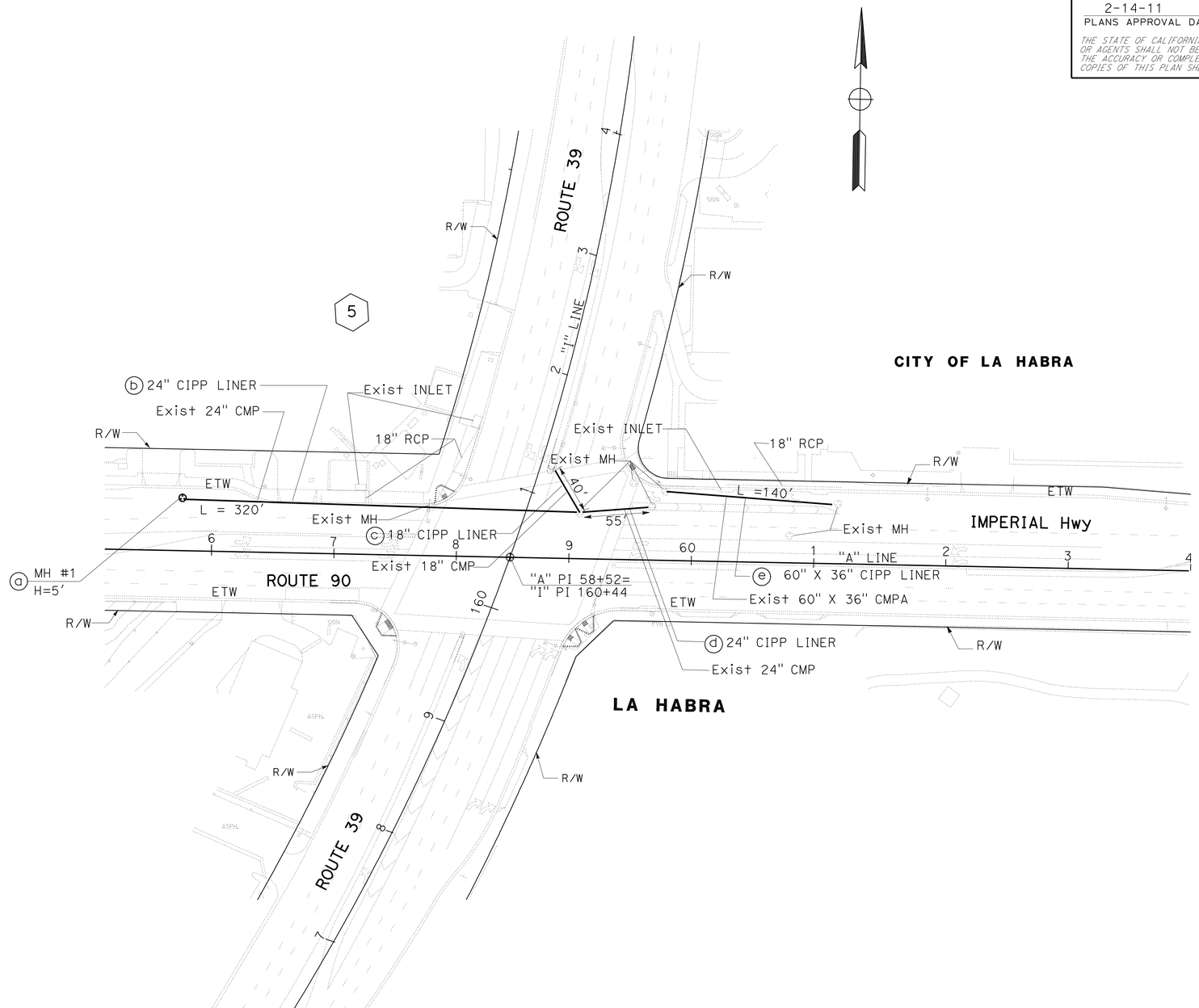

DRAINAGE PLAN

SCALE: 1" = 50'

D-2

THIS PLAN ACCURATE FOR DRAINAGE WORK ONLY

REVISED BY	DATE REVISED
NAM TU DAO	12-09-10

RAMPHA REAO — NAM TU DAO

CALCULATED-DESIGNED BY — CHECKED BY

FUNCTIONAL SUPERVISOR: MILI LIM STAMATION

STATE OF CALIFORNIA - DEPARTMENT OF TRANSPORTATION
Caltrans® DESIGN DIVISION

LAST REVISION 12-27-10 — DATE PLOTTED => 18-FEB-2011 — TIME PLOTTED => 13:49

Dist	COUNTY	ROUTE	POST MILES TOTAL PROJECT	SHEET No.	TOTAL SHEETS
12	Ora	39	18.3/22.6	4	20

Nam Tu Dao 01-04-11
REGISTERED CIVIL ENGINEER DATE

2-14-11
PLANS APPROVAL DATE

THE STATE OF CALIFORNIA OR ITS OFFICERS OR AGENTS SHALL NOT BE RESPONSIBLE FOR THE ACCURACY OR COMPLETENESS OF SCANNED COPIES OF THIS PLAN SHEET.

REGISTERED PROFESSIONAL ENGINEER
NAM TU DAO
No. C 30349
Exp. 3/31/12
CIVIL
STATE OF CALIFORNIA

NOTE:

FOR COMPLETE RIGHT OF WAY AND ACCURATE ACCESS DATA, SEE RIGHT OF WAY RECORD MAPS AT DISTRICT OFFICE.

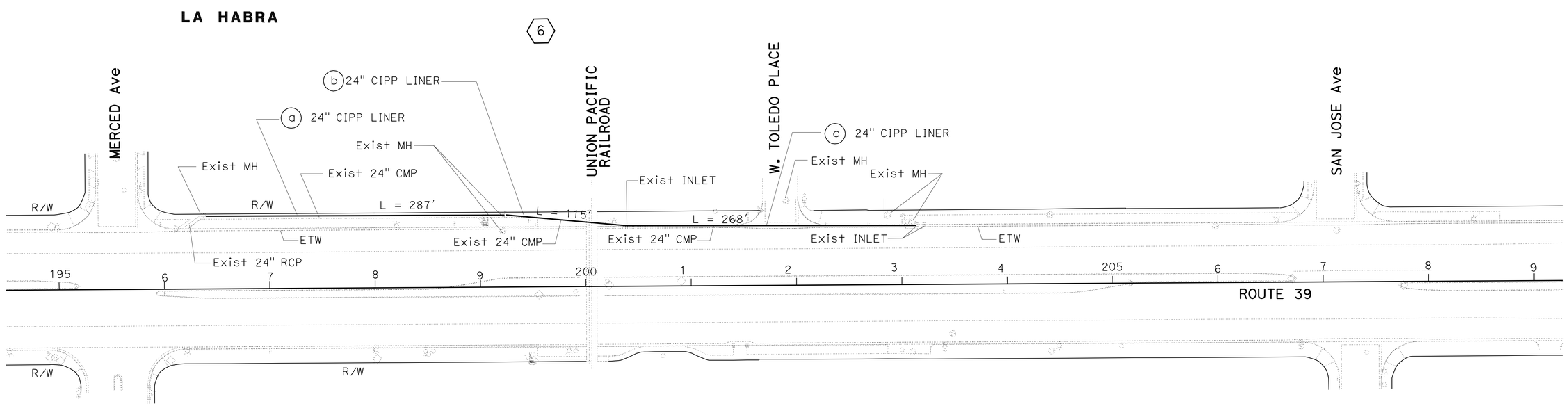

LA HABRA

DRAINAGE PLAN

SCALE: 1" = 50'

D-3

THIS PLAN ACCURATE FOR DRAINAGE WORK ONLY

STATE OF CALIFORNIA - DEPARTMENT OF TRANSPORTATION
Caltrans DESIGN DIVISION

FUNCTIONAL SUPERVISOR: MILI LIM STAMATION
CALCULATED-DESIGNED BY: RAMPHA REAO
CHECKED BY: NAM TU DAO
REVISED BY: NAM TU DAO
DATE REVISED: 12-09-10

LAST REVISION 12-27-10
DATE PLOTTED => 18-FEB-2011
TIME PLOTTED => 13:49

Dist	COUNTY	ROUTE	POST MILES TOTAL PROJECT	SHEET No.	TOTAL SHEETS
12	Ora	39	18.3/22.6	5	20

Nam Tu Dao 01-04-11
REGISTERED CIVIL ENGINEER DATE

2-14-11
PLANS APPROVAL DATE

THE STATE OF CALIFORNIA OR ITS OFFICERS OR AGENTS SHALL NOT BE RESPONSIBLE FOR THE ACCURACY OR COMPLETENESS OF SCANNED COPIES OF THIS PLAN SHEET.

REGISTERED PROFESSIONAL ENGINEER
NAM TU DAO
No. C 30349
Exp. 3/31/12
CIVIL
STATE OF CALIFORNIA

NOTE:

FOR COMPLETE RIGHT OF WAY AND ACCURATE ACCESS DATA, SEE RIGHT OF WAY RECORD MAPS AT DISTRICT OFFICE.

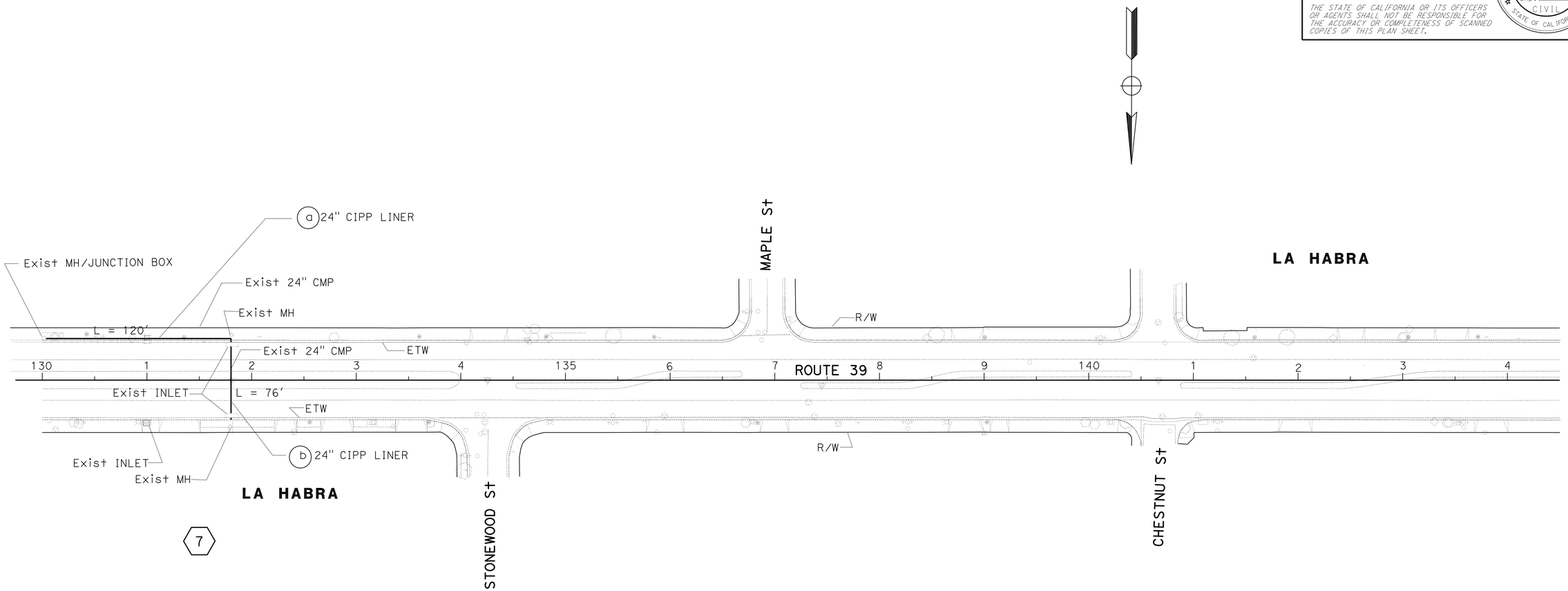

THIS PLAN ACCURATE FOR DRAINAGE WORK ONLY

DRAINAGE PLAN

SCALE: 1" = 50'

D-4

REVISED BY	DATE REVISED
NAM TU DAO	12-09-10

CALCULATED-DESIGNED BY	CHECKED BY
RAMPHA REAO	NAM TU DAO

FUNCTIONAL SUPERVISOR: MILI LIM STAMATION

STATE OF CALIFORNIA - DEPARTMENT OF TRANSPORTATION
Caltrans® DESIGN DIVISION

LAST REVISION 12-27-10
DATE PLOTTED => 18-FEB-2011
TIME PLOTTED => 13:49

Dist	COUNTY	ROUTE	POST MILES TOTAL PROJECT	SHEET No.	TOTAL SHEETS
12	Ora	39	18.3/22.6	6	20

Nam Tu Dao 01-04-11
REGISTERED CIVIL ENGINEER DATE

2-14-11
PLANS APPROVAL DATE

REGISTERED PROFESSIONAL ENGINEER
NAM TU DAO
No. C 30349
Exp. 3/31/12
CIVIL
STATE OF CALIFORNIA

THE STATE OF CALIFORNIA OR ITS OFFICERS OR AGENTS SHALL NOT BE RESPONSIBLE FOR THE ACCURACY OR COMPLETENESS OF SCANNED COPIES OF THIS PLAN SHEET.

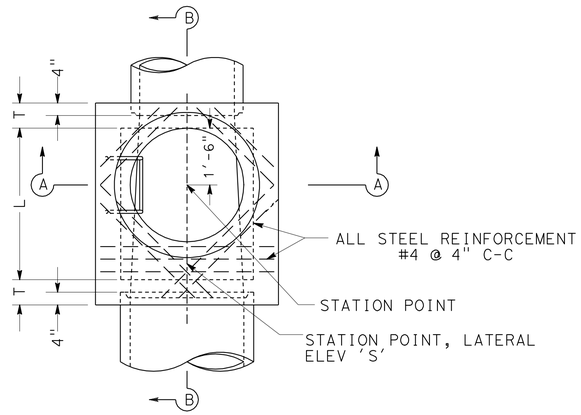

PLAN
(SHAFT NOT SHOWN)

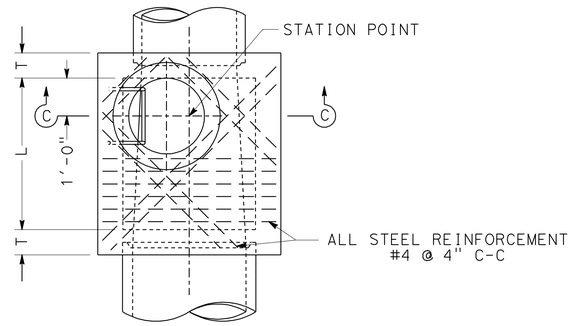

PLAN
DETAIL N
(SHAFT NOT SHOWN)

NOTES

1. HEIGHT 'H' (IN SEC A-A AND SEC B-B) SHALL BE NOT LESS THAN 4'-8", BUT MAY BE INCREASED PROVIDED THAT THE VALUE OF 'M' SHALL BE NOT LESS THAN THE MINIMUM SPECIFIED AND THAT THE REDUCER SHALL BE USED. FOR 'H' (IN SEC C-C) SEE NOTE 4.
2. LENGTH 'L' SHALL BE 4' UNLESS OTHERWISE SHOWN ON DRAINAGE PLAN.
3. SHAFT SHALL BE CONSTRUCTED AS PER SEC C-C AND DETAIL N WHEN DEPTH 'M' FROM STREET GRADE TO TOP OF BOX IS LESS THAN 2'-10½" FOR PAVED STREETS OR 3'-6" FOR UNPAVED STREETS.
4. DEPTH 'P' MAY BE REDUCED TO AN ABSOLUTE LIMIT OF 6" WHEN LARGER VALUES OF 'P' WOULD REDUCE 'H' (IN SEC C-C) TO 3'-6" OR LESS.
5. 'T' SHALL BE 8" FOR VALUES OF 'H' UP TO AND INCLUDING 8'. 'T' SHALL BE 10" FOR VALUES OF 'H' OVER 8'.
6. LOWEST STEP SHALL BE NOT MORE THAN 16" ABOVE THE LEDGE AT THE SIDE OF MANHOLE FLOOR.
7. BODY OF MANHOLE SHALL BE POURED IN ONE CONTINUOUS OPERATION, EXCEPT THAT THE CONTRACTOR SHALL HAVE THE OPTION OF PLACING AT THE SPRING LINE A CONSTRUCTION JOINT WITH A LONGITUDINAL KEYWAY.
8. REINFORCING STEEL SHALL BE 1½" CLEAR FROM FACE OF CONCRETE.
9. FLOOR OF MANHOLE SHALL BE STEEL-TROWELED TO SPRING LINE.
10. RINGS, REDUCER, AND PIPE FOR ACCESS SHAFT SHALL BE SEATED IN 1:2 CEMENT MORTAR AND NEATLY POINTED OR WIPED INSIDE SHAFT.
11. MANHOLE FRAME AND COVER PER STANDARD PLAN B7-11 DETAIL 'U45'.
12. STEP DETAIL PER STANDARD PLANS D74C AND D75.

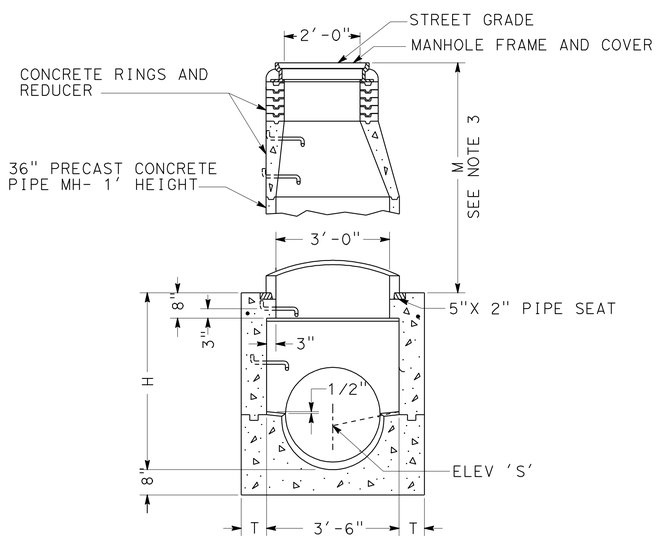

SECTION A-A

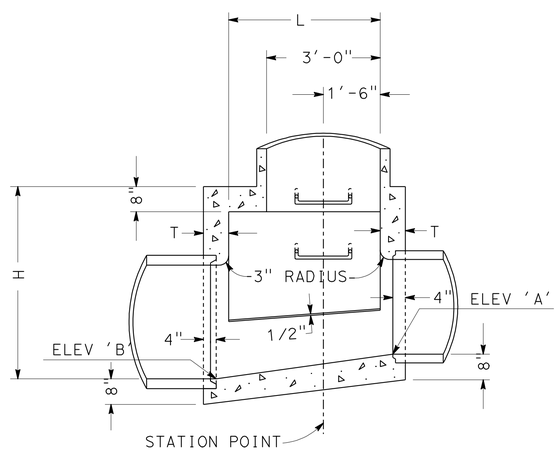

SECTION B-B

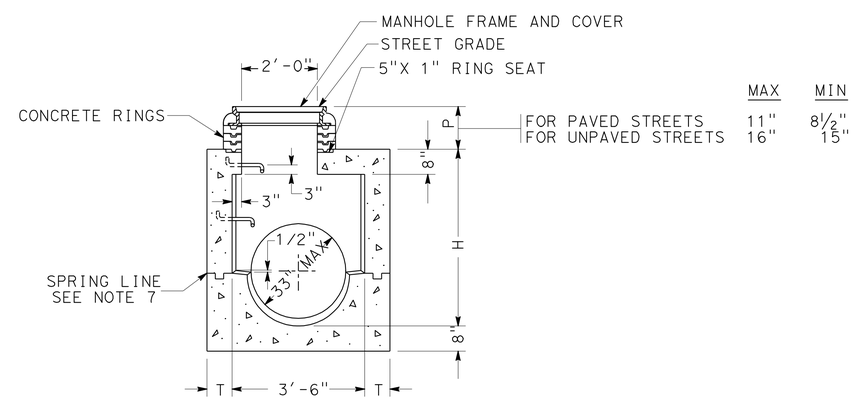

	MAX	MIN
FOR PAVED STREETS	11"	8½"
FOR UNPAVED STREETS	16"	15"

SECTION C-C

MANHOLE TYPE 1 (MH #1)

DRAINAGE DETAILS

NO SCALE

DD-1

REVISED BY	NAM TU DAO
DATE REVISED	12-09-10
CALCULATED-DESIGNED BY	RAMPHA REAO
CHECKED BY	NAM TU DAO
FUNCTIONAL SUPERVISOR	MILI LIM STAMATION

STATE OF CALIFORNIA - DEPARTMENT OF TRANSPORTATION
Caltrans
DESIGN DIVISION

LAST REVISION 12-27-10 | DATE PLOTTED => 18-FEB-2011 | TIME PLOTTED => 13:49

Dist	COUNTY	ROUTE	POST MILES TOTAL PROJECT	SHEET No.	TOTAL SHEETS
12	Ora	39	18.3/22.6	7	20

Nam Tu Dao 01-04-11
REGISTERED CIVIL ENGINEER DATE

2-14-11
PLANS APPROVAL DATE

THE STATE OF CALIFORNIA OR ITS OFFICERS OR AGENTS SHALL NOT BE RESPONSIBLE FOR THE ACCURACY OR COMPLETENESS OF SCANNED COPIES OF THIS PLAN SHEET.

REGISTERED PROFESSIONAL ENGINEER
NAM TU DAO
No. C 30349
Exp. 3/31/12
CIVIL
STATE OF CALIFORNIA

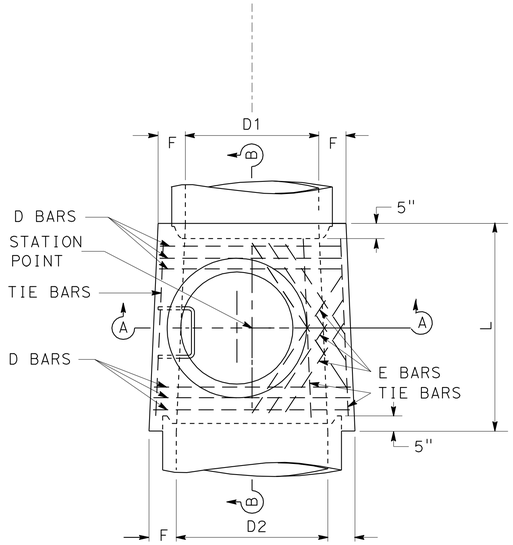

PLAN
(SHAFT NOT SHOWN)

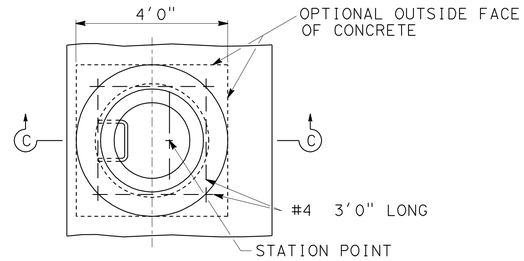

DETAIL N
(SHAFT NOT SHOWN)

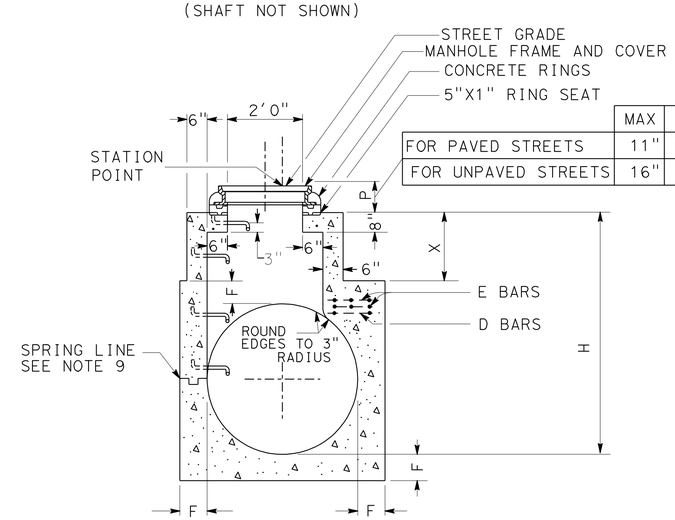

	MAX	MIN
FOR PAVED STREETS	11"	8 1/2"
FOR UNPAVED STREETS	16"	15"

SECTION C-C
(SEE NOTE 10)

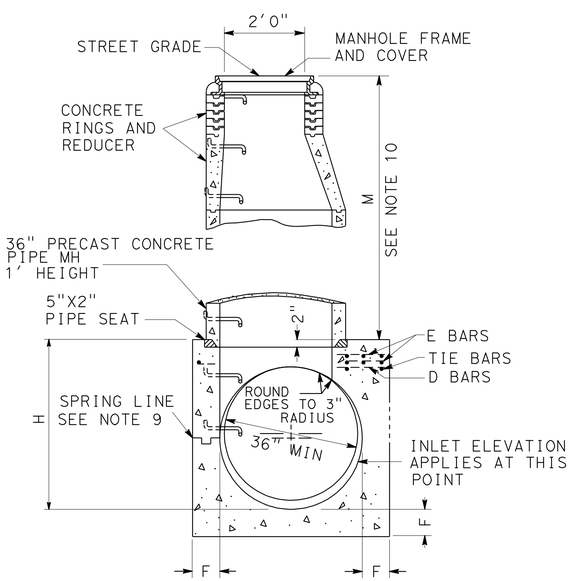

SECTION A-A'-A"

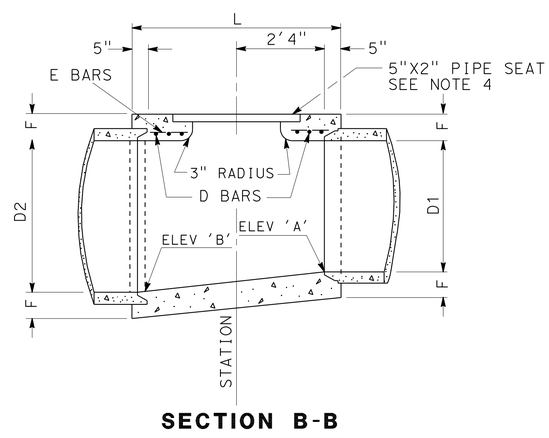

SECTION B-B

NOTES

1. VALUES FOR ELEV 'A', ELEV 'B', 'H', 'L', 'M' OR 'P' AND 'X' ARE SHOWN ON THE DRAINAGE PLAN.
2. CENTER OF MANHOLE SHAFT SHALL BE LOCATED OVER CENTERLINE OF STORM DRAIN WHEN DIAMETER 'D1' IS 48" OR LESS, IN WHICH CASE PLACE E BAR SYMMETRICALLY AROUND SHAFT AT 45° WITH CENTERLINE.
3. LENGTH 'L' SHALL BE 5'-6" UNLESS SHOWN OTHERWISE ON DRAINAGE PLAN.
4. THICKNESS OF 'F' SHALL VARY WHEN NECESSARY TO PROVIDE LEVEL PIPESEAT, BUT SHALL NOT BE LESS THAN TABULAR VALUES FOR 'F' SHOWN ON THIS PLAN.
5. REINFORCING STEEL SHALL BE 1½" CLEAR FROM FACE OF CONCRETE UNLESS SHOWN OTHERWISE. SIZES AND LENGTHS ARE SHOWN IN TABLE BELOW.
6. UNLESS OTHERWISE SHOWN, STEPS SHALL BE PLACED 12" ON CENTERS. THE LOWEST STEP SHALL BE NOT MORE THAN 16" ABOVE THE LEDGE AT SIDE OF MANHOLE FLOOR.
7. RINGS, REDUCER, AND PIPE FOR ACCESS SHAFT SHALL BE SEATED IN 1:2 CEMENT MORTAR AND NEATLY POINTED OR WIPED INSIDE THE SHAFT.
8. FLOOR OF MANHOLE SHALL BE STEEL-TROWELED TO SPRING LINE.
9. BODY OF MANHOLE SHALL BE POURED IN ONE CONTINOUS OPERATION, EXCEPT THAT THE CONTRACTOR SHALL HAVE THE OPTION OF PLACING AT THE SPRING LINE A CONSTRUCTION JOINT WITH A LONGITUDINAL KEYWAY.
10. SECTION C-C: WHEN DEPTH OF MANHOLE FROM STREET GRADE TO TOP OF BOX IS LESS THAN 2'-10½" FOR PAVED STREETS OR 3'-6" FOR UNPAVED STREETS, CONSTRUCT MONOLITHIC SHAFT AS PER SECTION. WHEN DIAMETER 'D' IS 48" OR LESS, CENTER OF SHAFT SHALL BE LOCATED AS PER NOTE 2.
11. MANHOLE FRAME AND COVER PER STANDARD PLAN B7-11 DETAIL 'U45'.
12. STEP DETAIL PER STANDARD PLANS D74C AND D75.
13. D BARS SHALL BE PLACED 3" C-C. E BARS SHALL BE SPACED 4" C-C. TIE BARS SHALL BE #3 SPACED 18" C-C OR LESS.
14. WHEN 'L' GREATER THAN 5'-6" IS SPECIFIED ON DRAINAGE PLAN, CONTINUE D BARS AT 6" C-C.
15. LENGTHS SHOWN IN TABLE ARE FOR LONGEST BARS. WHERE SHORTER BARS ARE REQUIRED, BEND OR CUT TO MEET FIELD REQUIREMENTS.

TABLE OF VALUES FOR F	
D2	F
36"	6 1/2"
39"	7"
42"	7 1/2"
45"	7 3/4"
48"	8"
51"	8 1/2"
54"	9"
57"	9 1/4"
60"	9 1/2"
63"	10"
66"	10 1/4"
69"	10 3/4"
72"	11"
78"	11 3/4"
84"	12 1/2"
90"	13 1/4"
96"	14"

STEEL TABLE						
D BARS				E BARS		
D2	NO REQ	SIZE	LENGTH	NO REQ	SIZE	LENGTH
36"	6	#4	3'-10"	4	#4	2'-9"
39"	6	"	4'-2"	4	"	2'-11"
42"	6	#5	4'-6"	4	"	3'-2"
45"	6	"	4'-10"	4	"	3'-5"
48"	6	"	5'-1"	4	"	3'-7"
51"	6	"	5'-5"	6	"	4'-9"
54"	6	"	5'-9"	6	"	5'-1"
57"	6	"	6'-1"	6	"	5'-6"
60"	6	"	6'-4"	6	"	5'-11"
63"	6	"	6'-8"	6	"	6'-3"
66"	6	"	7'-0"	8	"	6'-8"
69"	6	"	7'-4"	8	"	6'-8"
72"	6	"	7'-7"	8	"	6'-8"
78"	6	"	8'-3"	8	"	6'-8"
84"	6	"	8'-10"	10	"	6'-8"
90"	6	#6	9'-6"	10	"	6'-8"
	6	"	10'-1"	10	"	6'-8"

MANHOLE TYPE 2 (MH #2)

DRAINAGE DETAILS

NO SCALE

DD-2

STATE OF CALIFORNIA - DEPARTMENT OF TRANSPORTATION
Caltrans® DESIGN DIVISION

FUNCTIONAL SUPERVISOR: MILI LIM STAMATION
CALCULATED-DESIGNED BY: RAMPHA REAO
CHECKED BY: NAM TU DAO
REVISED BY: NAM TU DAO
DATE REVISED: 12-09-10

LAST REVISION 12-27-10
DATE PLOTTED => 18-FEB-2011
TIME PLOTTED => 13:49

Dist	COUNTY	ROUTE	POST MILES TOTAL PROJECT	SHEET No.	TOTAL SHEETS
12	Ora	39	18.3/22.6	8	20

Nam Tu Dao 01-04-11
REGISTERED CIVIL ENGINEER DATE

2-14-11
PLANS APPROVAL DATE

REGISTERED PROFESSIONAL ENGINEER NAM TU DAO No. C 30349 Exp. 3/31/12 CIVIL STATE OF CALIFORNIA

THE STATE OF CALIFORNIA OR ITS OFFICERS OR AGENTS SHALL NOT BE RESPONSIBLE FOR THE ACCURACY OR COMPLETENESS OF SCANNED COPIES OF THIS PLAN SHEET.

DRAINAGE QUANTITIES

DRAINAGE SHEET No.	DRAINAGE SYSTEM No.	DRAINAGE UNIT	CURED-IN-PLACE PIPELINER 18"	24"	18" X 11"	24" X 16"	29" X 18"	60" X 36"	CLEANING, INSPECTING AND PREPARING HOST PIPE	(N) "H" HIEGHT	MINOR CONCRETE (MINOR STRUCTURE)	ROADWAY EXCAVATION (TYPE Z-2) AERIALLY DEPOSTIED LEAD	(N) MANHOLE COVER	MISCELLANEOUS IRON AND STELL	36" PRECAST CONCRETE PIPE MANHOLE		STATION	DRAINAGE SHEET No.	DRAINAGE SYSTEM No.	DRAINAGE UNIT
			LF	LF	LF	LF	LF	LF	LF	LF	CY	CY	EA	LB	LF					
D-1	1	a								7	6	8	1	435	1	MANHOLE #1	144+42	D-1	1	a
		b					180		180							29" X 18" CIPP LINER				b
D-1	2	a				110			110							24" X 16" CIPP LINER	145+42	D-1	2	a
D-1	3	a								4	5	8	1	435	1	MANHOLE #1	180+00	D-1	3	a
		b			65				65							18" X 11" CIPP LINER				b
		c			15				15							18" X 11" CIPP LINER				c
D-1	4	a						180	180							60" X 36" CIPP LINER				a
		b						96	96							60" X 36" CIPP LINER				b
		c								4	6	10	1	435	1	MANHOLE #2				c
		d						62	62							60" X 36" CIPP LINER				d
		e	150						150							18" CIPP LINER				e
D-2	5	a								5	5	8	1	435	1	MANHOLE #1	55+77	D-2	5	a
		b		320					320							24" CIPP LINER				b
		c	40						40							18" CIPP LINER				c
		d		55					55							24" CIPP LINER				d
		e						140	140							60" X 36" CIPP LINER				e
D-3	6	a		287					287							24" CIPP LINER	196+38	D-3	6	a
		b		115					115							24" CIPP LINER				b
		c		268					268							24" CIPP LINER				c
D-4	7	a		120					120							24" CIPP LINER	129+80	D-4	7	a
		b		76					76							24" CIPP LINER				b
TOTAL			190	1241	80	110	180	478	2279		22	34	4	1740	4					

(N) - NOT A SEPARATE PAY ITEM, FOR INFORMATION ONLY

STATE OF CALIFORNIA - DEPARTMENT OF TRANSPORTATION
Caltrans DESIGN DIVISION

FUNCTIONAL SUPERVISOR: MILI LIM STAMATION
CALCULATED-DESIGNED BY: RAMPHA REAO
CHECKED BY: NAM TU DAO
REVISED BY: NAM TU DAO
DATE REVISED: 12-09-10

DRAINAGE QUANTITIES
DQ-1

LAST REVISION 01-03-11
DATE PLOTTED => 18-FEB-2011
TIME PLOTTED => 13:49

Dist	COUNTY	ROUTE	POST MILES TOTAL PROJECT	SHEET No.	TOTAL SHEETS
12	Ora	39	18.3/22.6	9	20

Kevin D. Pham 01-04-11
REGISTERED CIVIL ENGINEER DATE

2-14-11
PLANS APPROVAL DATE

REGISTERED PROFESSIONAL ENGINEER KEVIN D. PHAM No. C61965 Exp. 9/30/11 CIVIL STATE OF CALIFORNIA

THE STATE OF CALIFORNIA OR ITS OFFICERS OR AGENTS SHALL NOT BE RESPONSIBLE FOR THE ACCURACY OR COMPLETENESS OF SCANNED COPIES OF THIS PLAN SHEET.

NOTES:

1. FOR COMPLETE RIGHT OF WAY AND ACCURATE ACCESS DATA, SEE RIGHT OF WAY RECORD MAPS AT DISTRICT OFFICE.
2. LOCATIONS OF UTILITIES SHOWN ON THESE PLANS ARE APPROXIMATE AND SHALL BE VARIFIED BY THE CONTRACTOR PRIOR TO CONSTRUCTION.
3. ALL UTILITIES SHWN ARE EXISTING UNLESS OTHERWISE NOTED.

Abbreviations

SCE - SOUTHERN CALIFORNIA EDISON
SCG - SOUTHERN CALIFORNIA GAS
PB - PACIFIC BELL
LA HABRA - CITY OF LA HABRA
OCSD - ORANGE COUNTY SANITATION DISTRICT
GEN PET - GENERAL PETROLEUM
CDWC - CALIFORNIA DOMESTIC WATER COMPANY
DU - DUCT
CBL - CABLE
BUR - BURIED
ACP - ASBESTOS CEMENT PIPE
HG or HPG - HIGH PRESSURE GAS
RCSCP - REINFORCED CONCRETE STEEL CYLINDER PIPE
DIP - DUCTILE IRON PIPE
CML&CSP - CEMENT MORTAR LINED & COATED STEEL PIPE
STL - STEEL
SFM or FMS - FORCED MAIN SEWER
PE - POLYETHYLENE
CSG - CASING
COLH - CITY OF LA HABRA
MWD - METROPOLITAN WATER DISTRICT
GTE - GENERAL TELEPHONE & ELECTRONICS

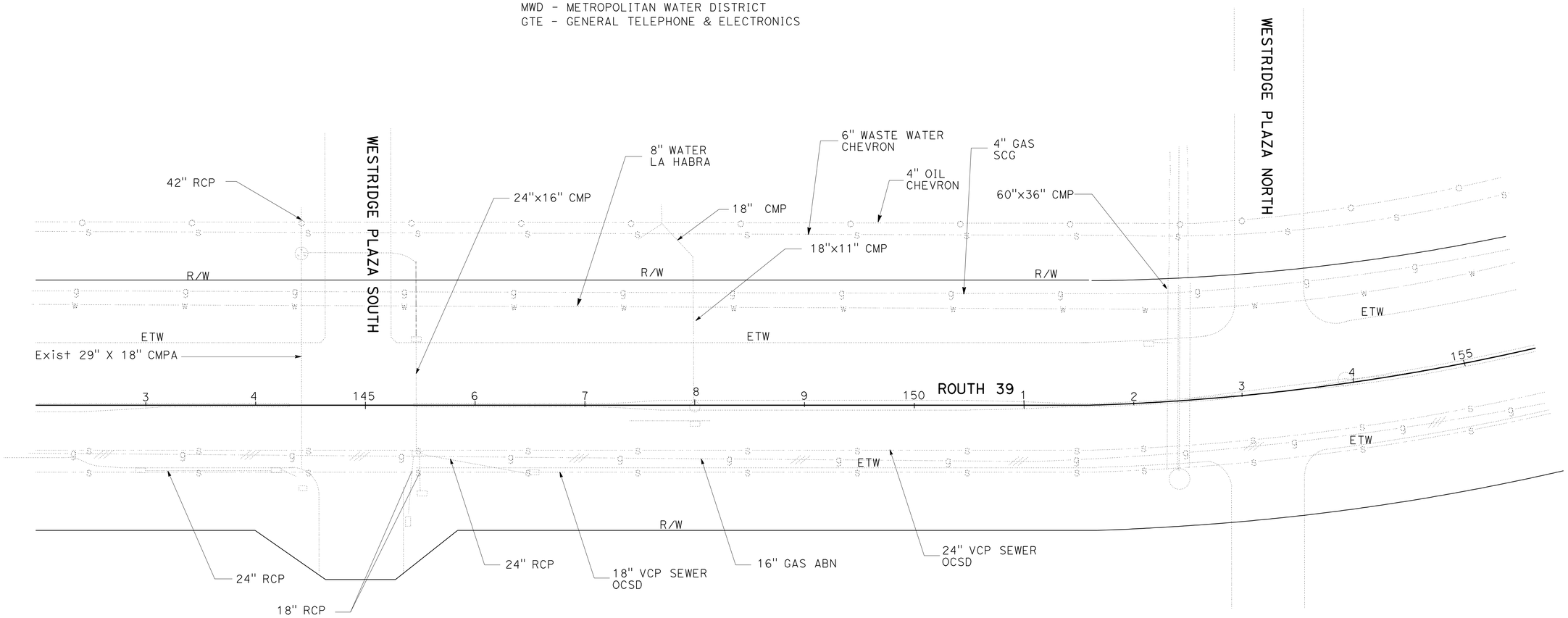

THIS PLAN ACCURATE FOR UTILITY INFORMATION ONLY

UTILITY PLAN

SCALE: 1" = 50'

U-1

STATE OF CALIFORNIA - DEPARTMENT OF TRANSPORTATION
Caltrans® DESIGN DIVISION

FUNCTIONAL SUPERVISOR: CHRISTOPHER LE
CALCULATED-DESIGNED BY: LAP NGUYEN
CHECKED BY: KEVIN PHAM
REVISED BY: NAM TU DAO
DATE REVISED: 12-29-10

LAST REVISION 01-04-11
DATE PLOTTED => 18-FEB-2011
TIME PLOTTED => 13:49

Dist	COUNTY	ROUTE	POST MILES TOTAL PROJECT	SHEET No.	TOTAL SHEETS
12	Ora	39	18.3/22.6	10	20

Kevin D. Pham 01-04-11
REGISTERED CIVIL ENGINEER DATE

2-14-11
PLANS APPROVAL DATE

REGISTERED PROFESSIONAL ENGINEER KEVIN D. PHAM No. C61965 Exp. 9/30/11 CIVIL STATE OF CALIFORNIA

THE STATE OF CALIFORNIA OR ITS OFFICERS OR AGENTS SHALL NOT BE RESPONSIBLE FOR THE ACCURACY OR COMPLETENESS OF SCANNED COPIES OF THIS PLAN SHEET.

NOTE:

FOR COMPLETE RIGHT OF WAY AND ACCESS DATA,
CONTACT RIGHT OF WAY ENGINEERING AT THE DISTRICT OFFICE.

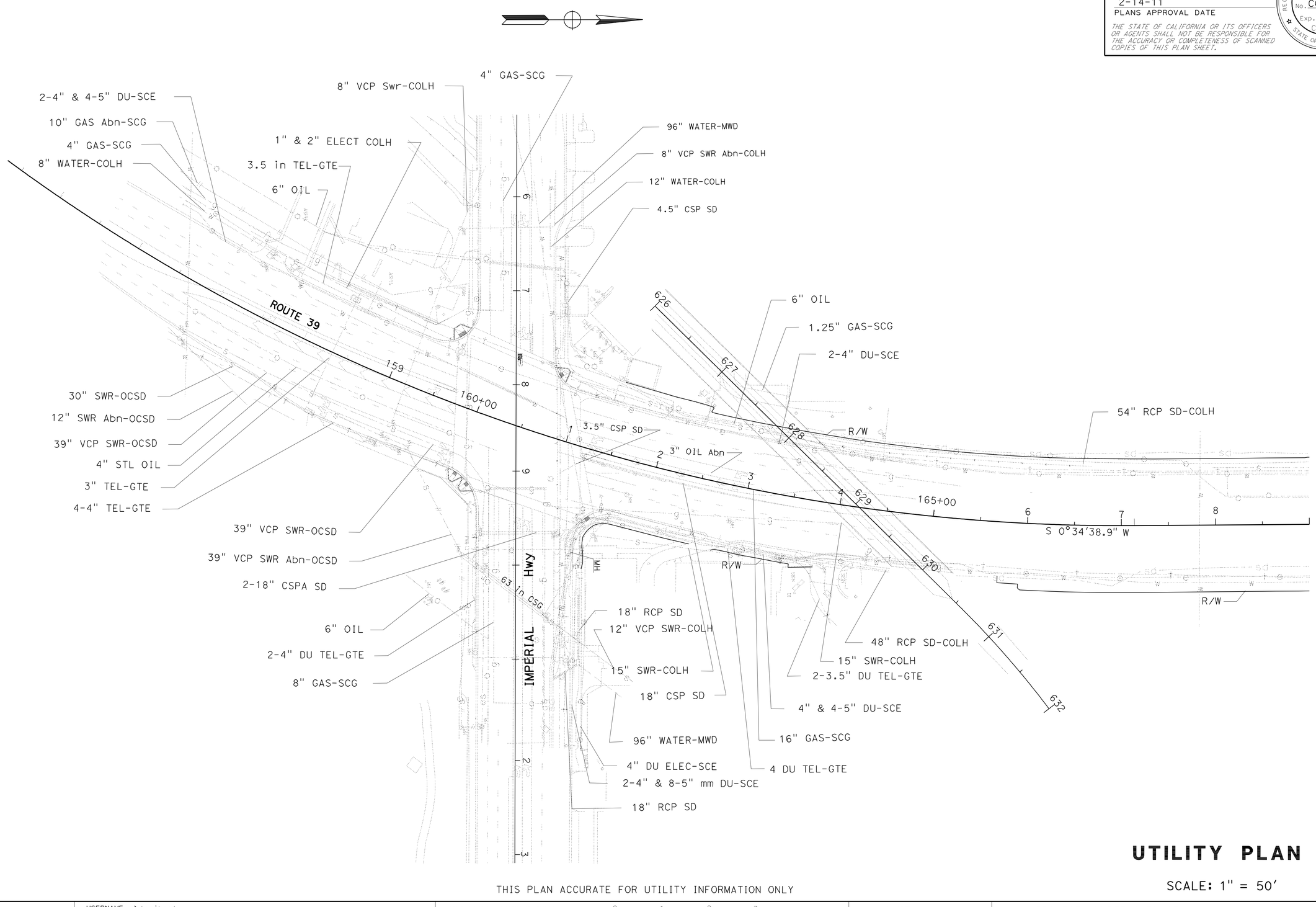

UTILITY PLAN

SCALE: 1" = 50'

U-2

THIS PLAN ACCURATE FOR UTILITY INFORMATION ONLY

STATE OF CALIFORNIA - DEPARTMENT OF TRANSPORTATION
Caltrans DESIGN DIVISION

FUNCTIONAL SUPERVISOR: CHRISTOPHER LE
CALCULATED-DESIGNED BY: LAP NGUYEN
CHECKED BY: KEVIN PHAM
REVISED BY: NAM TU DAO
DATE REVISED: 12-29-10

LAST REVISION 01-03-11
DATE PLOTTED => 18-FEB-2011
TIME PLOTTED => 13:50

Dist	COUNTY	LOCATION CODE	POST MILES TOTAL PROJECT	SHEET No.	TOTAL SHEETS
12	Ora	39	18.3/22.6	11	20

Kevin D. Pham 01-04-11
REGISTERED CIVIL ENGINEER DATE

2-14-11
PLANS APPROVAL DATE

REGISTERED PROFESSIONAL ENGINEER KEVIN D. PHAM No. C61965 Exp. 9/30/11 CIVIL STATE OF CALIFORNIA

THE STATE OF CALIFORNIA OR ITS OFFICERS OR AGENTS SHALL NOT BE RESPONSIBLE FOR THE ACCURACY OR COMPLETENESS OF SCANNED COPIES OF THIS PLAN SHEET.

NOTE:

FOR COMPLETE RIGHT OF WAY AND ACCESS DATA,
CONTACT RIGHT OF WAY ENGINEERING AT THE DISTRICT OFFICE.

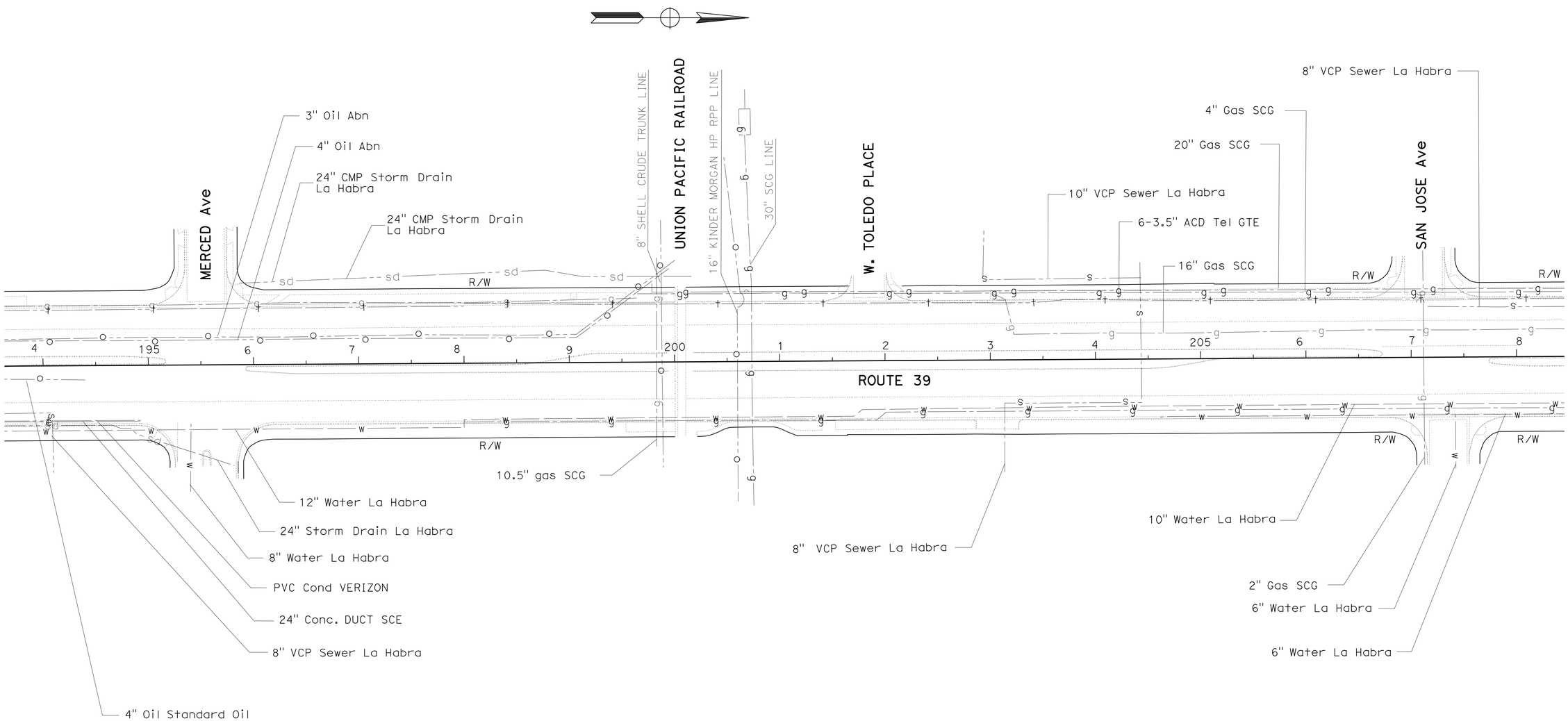

THIS PLAN ACCURATE FOR UTILITY INFORMATION ONLY

UTILITY PLAN

SCALE: 1" = 50'

U-3

STATE OF CALIFORNIA - DEPARTMENT OF TRANSPORTATION
Caltrans® DESIGN DIVISION

FUNCTIONAL SUPERVISOR: CHRISTOPHER LE
CALCULATED-DESIGNED BY: LAP NGUYEN
CHECKED BY: KEVIN PHAM
REVISED BY: NAM TU DAO
DATE REVISED: 12-29-10

LAST REVISION 01-03-11
DATE PLOTTED => 18-FEB-2011
TIME PLOTTED => 13:50

Dist	COUNTY	LOCATION CODE	POST MILES TOTAL PROJECT	SHEET No.	TOTAL SHEETS
12	Ora	39	18.3/22.6	12	20

Kevin D. Pham 01-04-11
REGISTERED CIVIL ENGINEER DATE

2-14-11
PLANS APPROVAL DATE

REGISTERED PROFESSIONAL ENGINEER
KEVIN D. PHAM
No. C61965
Exp. 9/30/11
CIVIL
STATE OF CALIFORNIA

THE STATE OF CALIFORNIA OR ITS OFFICERS OR AGENTS SHALL NOT BE RESPONSIBLE FOR THE ACCURACY OR COMPLETENESS OF SCANNED COPIES OF THIS PLAN SHEET.

NOTE:

FOR COMPLETE RIGHT OF WAY AND ACCESS DATA,
CONTACT RIGHT OF WAY ENGINEERING AT THE DISTRICT OFFICE.

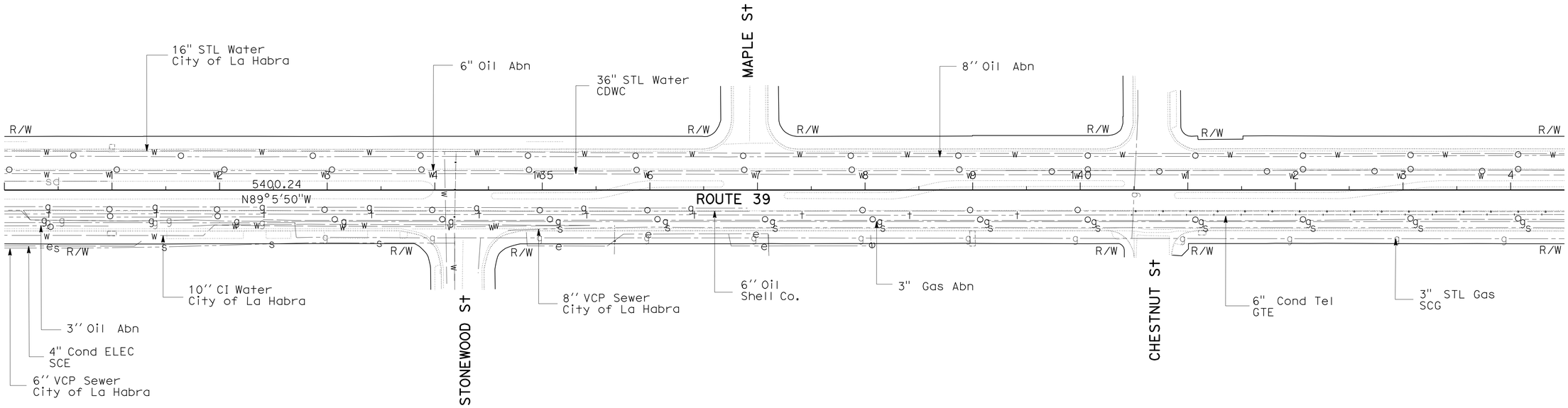

THIS PLAN ACCURATE FOR UTILITY INFORMATION ONLY

UTILITY PLAN

SCALE: 1" = 50'

U-4

CALCULATED-DESIGNED BY	LAP NGUYEN	REVISED BY	NAM TU DAO
CHECKED BY	KEVIN PHAM	DATE REVISED	12-29-10

FUNCTIONAL SUPERVISOR: CHRISTOPHER LE

STATE OF CALIFORNIA - DEPARTMENT OF TRANSPORTATION
Caltrans® DESIGN DIVISION

LAST REVISION 01-03-11
DATE PLOTTED => 18-FEB-2011
TIME PLOTTED => 13:50

Dist	COUNTY	LOCATION CODE	POST MILES TOTAL PROJECT	SHEET No.	TOTAL SHEETS
12	Ora	39	18.3/22.6	13	20

REGISTERED CIVIL ENGINEER 01-04-11 DATE

2-14-11
PLANS APPROVAL DATE

REGISTERED PROFESSIONAL ENGINEER NAM TU DAO No. C 30349 Exp. 3/31/12 CIVIL STATE OF CALIFORNIA

THE STATE OF CALIFORNIA OR ITS OFFICERS OR AGENTS SHALL NOT BE RESPONSIBLE FOR THE ACCURACY OR COMPLETENESS OF SCANNED COPIES OF THIS PLAN SHEET.

NOTE:

1. SIGN LOCATIONS ARE APPROXIMATE, EXACT SIGN LOCATIONS SHALL BE DETERMINED BY THE ENGINEER

LEGEND:

(X) CONSTRUCTION AREA SIGN

CONSTRUCTION AREA SIGN, ON TYPE II BARRICADE

PORTABLE CHANGEABLE MESSAGE SIGN

CONSTRUCTION AREA SIGNS

TYPE	PANEL SIZE	SIGN MESSAGE	No. OF SIGNS
(A) W20-1	36" x 36"	ROAD WORK AHEAD	14
(B) G20-2	36" x 36"	END ROAD WORK	9

PORTABLE CHANGABLE MESSAGE SIGN (PCMS)

SIGN CODE	SIGN MESSAGE	No. OF SIGNS
PCMS	LANE CLOSED AHEAD	8

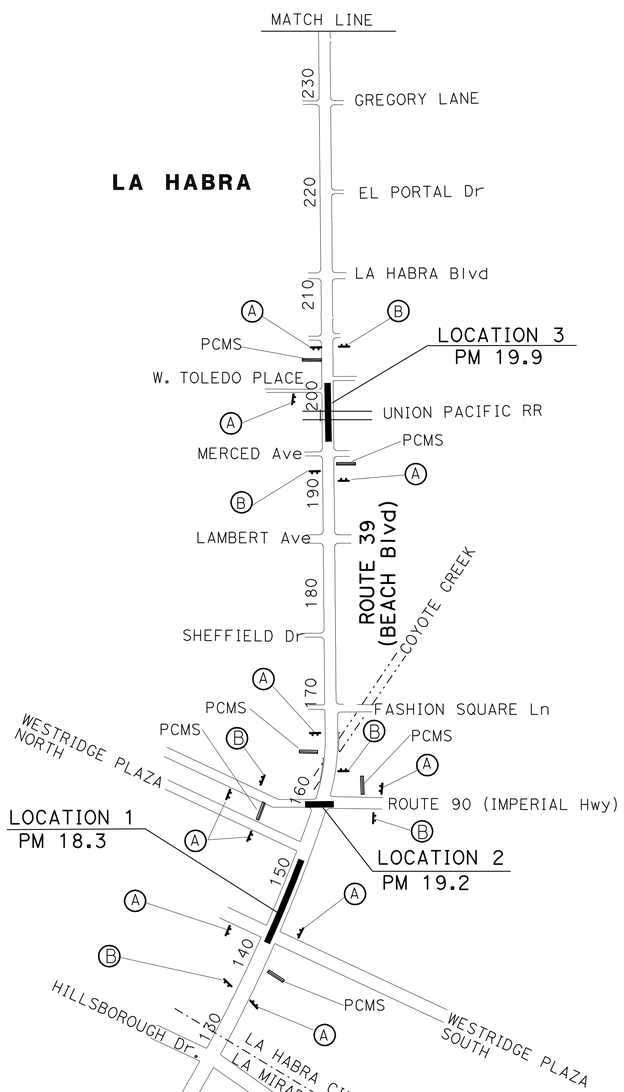

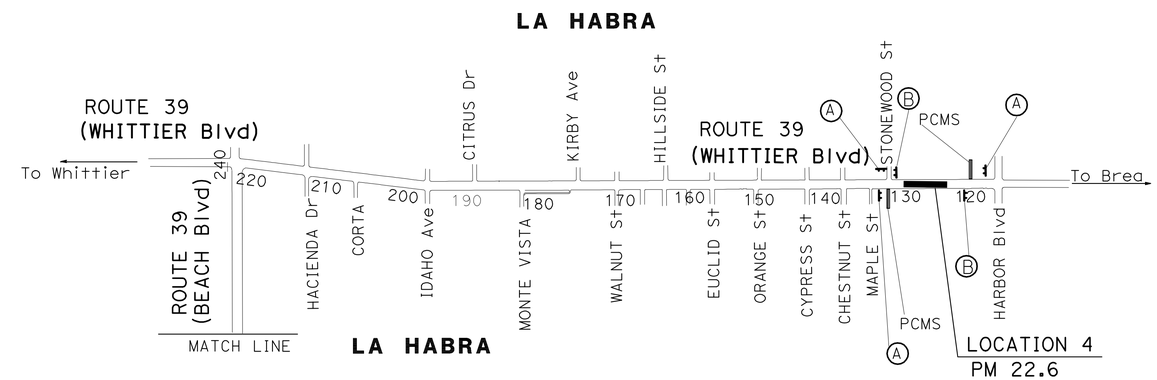

CONSTRUCTION AREA SIGNS AND TRAFFIC HANDLING PLAN

NO SCALE

CS-1

THIS PLAN ACCURATE FOR CONSTRUCTION AREA SIGN WORK ONLY

REVISED BY	DATE REVISED
NAM TU DAO	12-09-10

RAMPHA REAO — NAM TU DAO

CALCULATED-DESIGNED BY — CHECKED BY

FUNCTIONAL SUPERVISOR — MILI LIM STAMATION

STATE OF CALIFORNIA - DEPARTMENT OF TRANSPORTATION — Caltrans — DESIGN DIVISION

LAST REVISION 12-29-10 — DATE PLOTTED => 18-FEB-2011 — TIME PLOTTED => 13:50

DIST	COUNTY	ROUTE	POST MILES TOTAL PROJECT	SHEET NO.	TOTAL SHEETS
12	Ora	39	18.3/22.6	14	20

Randell D. Hiatt
REGISTERED CIVIL ENGINEER

June 6, 2008
PLANS APPROVAL DATE

REGISTERED PROFESSIONAL ENGINEER
Randell D. Hiatt
No. C50200
Exp. 6-30-09
CIVIL
STATE OF CALIFORNIA

The State of California or its officers or agents shall not be responsible for the accuracy or completeness of electronic copies of this plan sheet.

To accompany plans dated 2-14-11

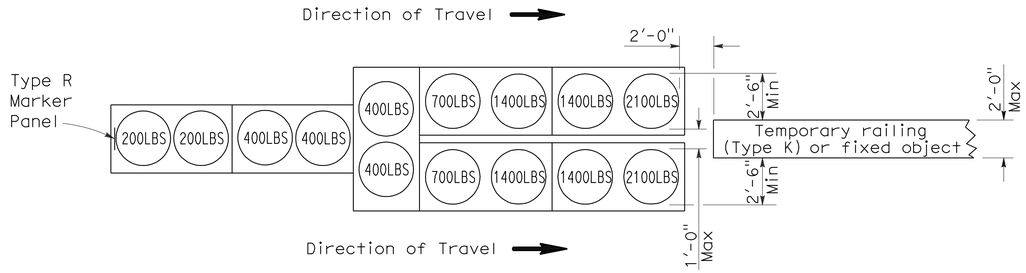

ARRAY 'TU14'

Approach speed 45 mph or more

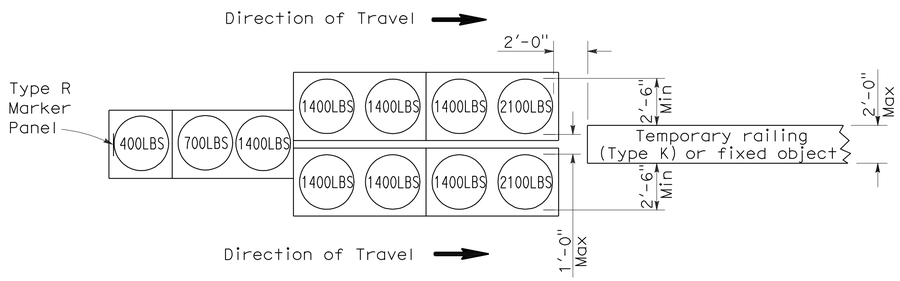

ARRAY 'TU11'

Approach speed less than 45 mph

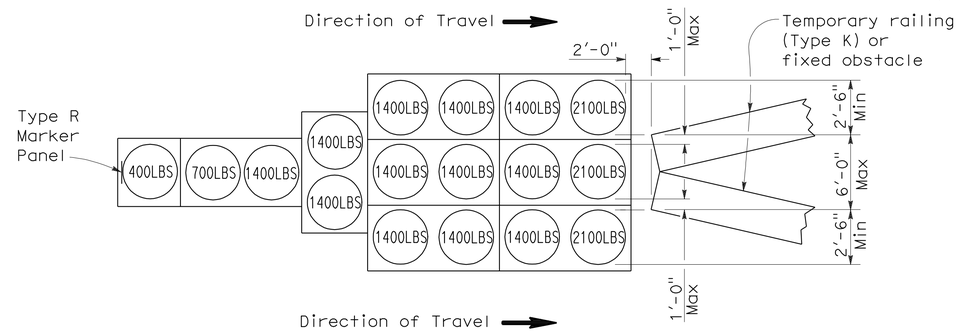

ARRAY 'TU17'

Approach speed less than 45 mph

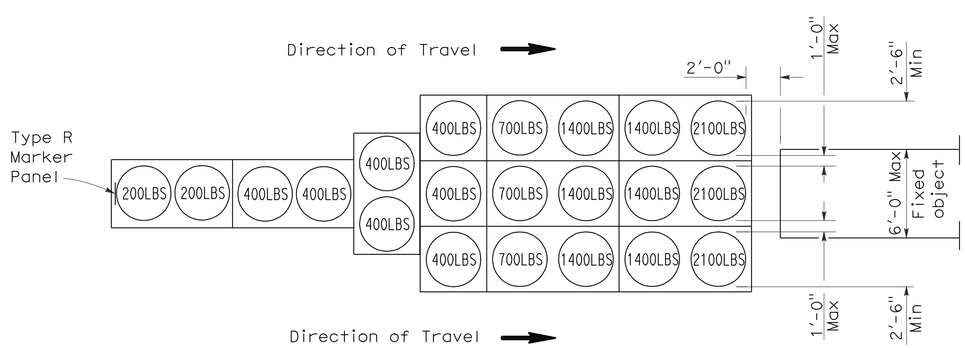

ARRAY 'TU21'

Approach speed 45 mph or more

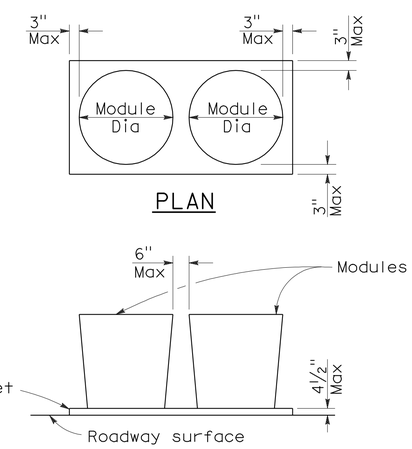

ELEVATION

CRASH CUSHION PALLET DETAIL

See Note 7

NOTES:

1. (XXX) Indicates sand filled module location and weight of sand in pounds for each module. Module spacing is based on the greater diameter of the module.
2. All sand weights are nominal.
3. Temporary crash cushion arrays shall not encroach on the traveled way.
4. Place the top of Type R marker panel 1" below the module lid.
5. Refer to Standard Plan A73B for marker details.
6. Approach speeds indicated conform to NCHRP 350 Report criteria.
7. Use of pallets is optional.

STATE OF CALIFORNIA
DEPARTMENT OF TRANSPORTATION

TEMPORARY CRASH CUSHION, SAND FILLED (UNIDIRECTIONAL)

NO SCALE

RSP T1A DATED JUNE 6, 2008 SUPERSEDES STANDARD PLAN T1A
DATED MAY 1, 2006 - PAGE 211 OF THE STANDARD PLANS BOOK DATED MAY 2006.

REVISED STANDARD PLAN RSP T1A

2006 REVISED STANDARD PLAN RSP T1A

5-15-08

DIST	COUNTY	ROUTE	POST MILES TOTAL PROJECT	SHEET NO.	TOTAL SHEETS
12	Ora	39	18.3/22.6	15	20

Randell D. Hiatt
REGISTERED CIVIL ENGINEER

June 6, 2008
PLANS APPROVAL DATE

REGISTERED PROFESSIONAL ENGINEER
Randell D. Hiatt
No. C50200
Exp. 6-30-09
CIVIL
STATE OF CALIFORNIA

The State of California or its officers or agents shall not be responsible for the accuracy or completeness of electronic copies of this plan sheet.

To accompany plans dated 2-14-11

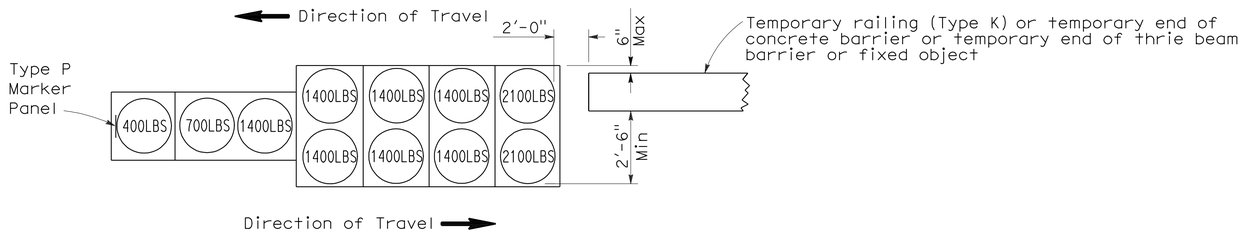

ARRAY 'TB11'

Approach speed less than 45 mph

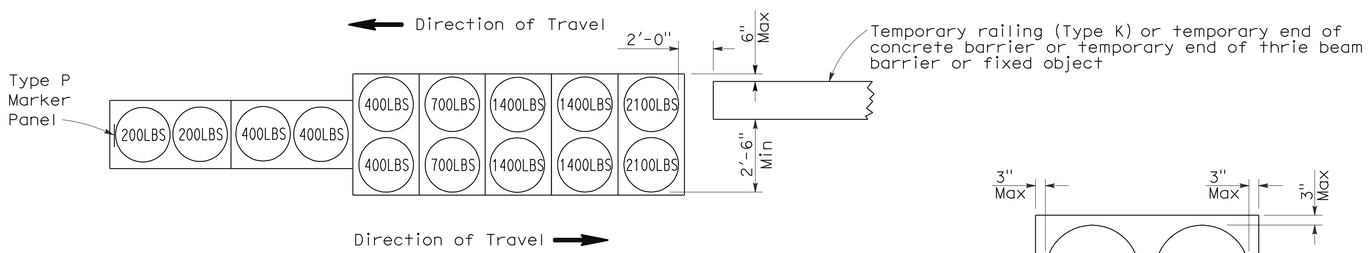

ARRAY 'TB14'

Approach speed 45 mph or more

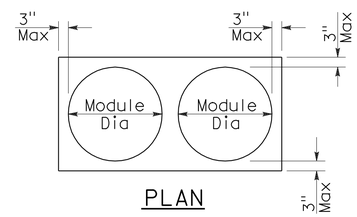

PLAN

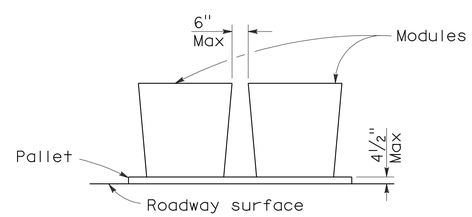

ELEVATION

CRASH CUSHION PALLET DETAIL

See Note 7

NOTES:

1. (XXX) Indicates sand filled module location and weight of sand in pounds for each module. Module spacing is based on the greater diameter of the module.
2. All sand weights are nominal.
3. Temporary crash cushion arrays shall not encroach on the traveled way.
4. Place the Type P marker panel so that the bottom of the panel rests upon the pallet.
5. Refer to Standard Plan A73B for marker details.
6. Approach speeds indicated conform to NCHRP 350 Report criteria.
7. Use of pallets is optional.

STATE OF CALIFORNIA
DEPARTMENT OF TRANSPORTATION

TEMPORARY CRASH CUSHION, SAND FILLED (BIDIRECTIONAL)

NO SCALE

RSP T1B DATED JUNE 6, 2008 SUPERSEDES STANDARD PLAN T1B
DATED MAY 1, 2006 - PAGE 212 OF THE STANDARD PLANS BOOK DATED MAY 2006.

REVISED STANDARD PLAN RSP T1B

2006 REVISED STANDARD PLAN RSP T1B

5-15-08

DIST	COUNTY	ROUTE	POST MILES TOTAL PROJECT	SHEET NO.	TOTAL SHEETS
12	Ora	39	18.3/22.6	16	20

Randell D. Hiatt
REGISTERED CIVIL ENGINEER

June 6, 2008
PLANS APPROVAL DATE

REGISTERED PROFESSIONAL ENGINEER
Randell D. Hiatt
No. C50200
Exp. 6-30-09
CIVIL
STATE OF CALIFORNIA

The State of California or its officers or agents shall not be responsible for the accuracy or completeness of electronic copies of this plan sheet.

To accompany plans dated 2-14-11

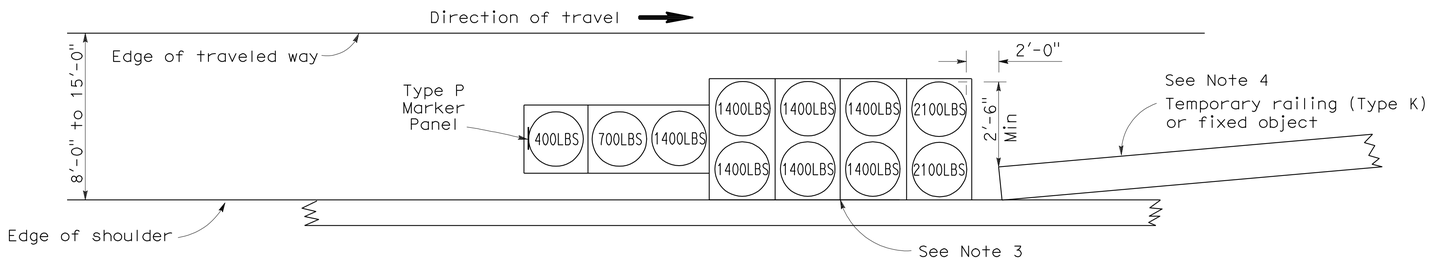

ARRAY 'TS11'

Approach speed less than 45 mph
See Note 9

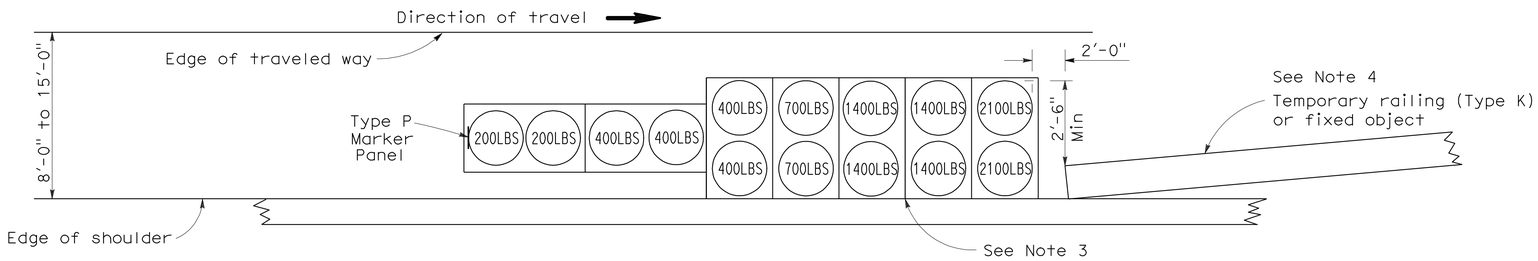

ARRAY 'TS14'

Approach speed 45 mph or more
See Note 9

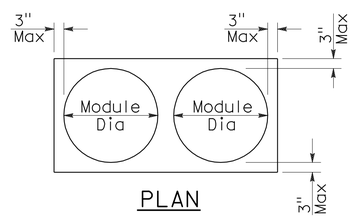

PLAN

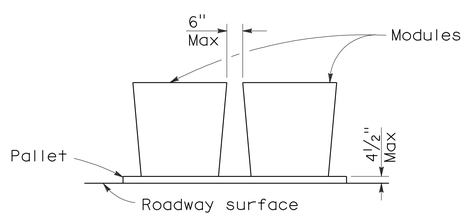

ELEVATION

CRASH CUSHION PALLET DETAIL

See Note 11

NOTES:

1. (XXX) Indicates sand filled module location and weight of sand in pounds for each module. Module spacing is based on the greater diameter of the module.
2. All sand weights are nominal.
3. The temporary crash cushion arrays shown on this plan shall be used only in locations where there will be traffic on one side of the temporary crash cushion array.
4. If the fixed object or approach end of the temporary railing is less than 15'-0" from the edge of traveled way, a temporary crash cushion is required in a construction or work zone.
5. Temporary crash cushion arrays shall not encroach on the traveled way.
6. Arrays for median shoulders shall conform to details shown on this plan for outside shoulders.
7. Place the Type P marker panel so that the bottom of the panel rests upon the pallet and faces traffic.
8. Refer to Standard Plan A73B for marker details.
9. For shoulder widths less than 8'-0", appropriate approved crash cushion protection, other than sand filled modules, shall be provided at fixed objects and at approach ends of temporary railing. The specific type of crash cushion shall be as shown on the project plans or as specified in the Special Provisions, or if not shown on the project plans or specified in the Special Provisions, shall be as approved by the Engineer.
10. Approach speeds indicated conform to NCHRP 350 Report criteria.
11. Use of pallets is optional.

STATE OF CALIFORNIA
DEPARTMENT OF TRANSPORTATION

TEMPORARY CRASH CUSHION, SAND FILLED (SHOULDER INSTALLATIONS)

NO SCALE

RSP T2 DATED JUNE 6, 2008 SUPERSEDES STANDARD PLAN T2
DATED MAY 1, 2006 - PAGE 213 OF THE STANDARD PLANS BOOK DATED MAY 2006.

REVISED STANDARD PLAN RSP T2

2006 REVISED STANDARD PLAN RSP T2

5-15-08

DIST	COUNTY	ROUTE	POST MILES TOTAL PROJECT	SHEET NO.	TOTAL SHEETS
12	Ora	39	18.3/22.6	17	20

Robert B Schott
LICENSED LANDSCAPE ARCHITECT

August 15, 2008
PLANS Approval DATE

LICENSED LANDSCAPE ARCHITECT
Robert B. Schott 3695
Robert B Schott
Signature
11-04-08
Renewal Date
08-11-08
Date
STATE OF CALIFORNIA

The State of California or its officers or agents shall not be responsible for the accuracy or completeness of electronic copies of this plan sheet.

To accompany plans dated 2-14-11

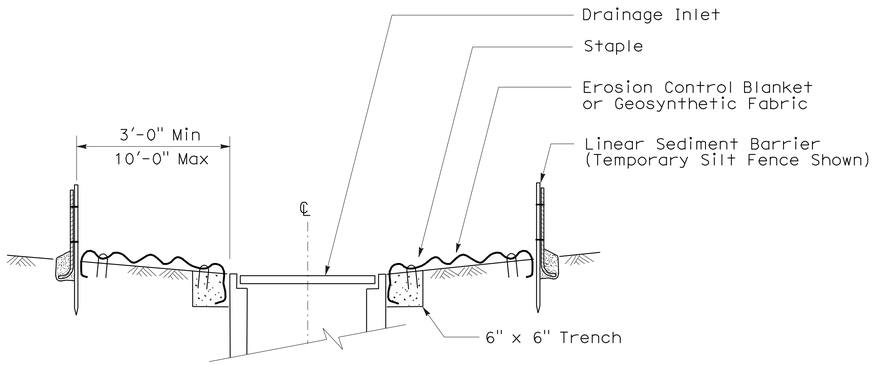

SECTION A-A

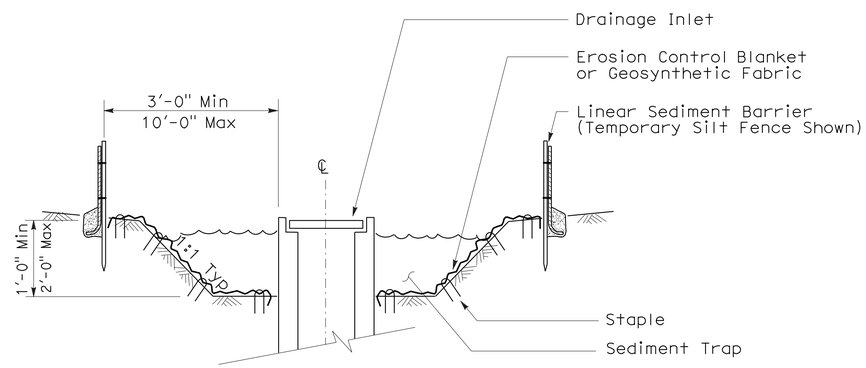

SECTION B-B

NOTES:

1. See Standard Plan T51 for Temporary Silt Fence.
2. Dimensions may vary to fit field conditions.

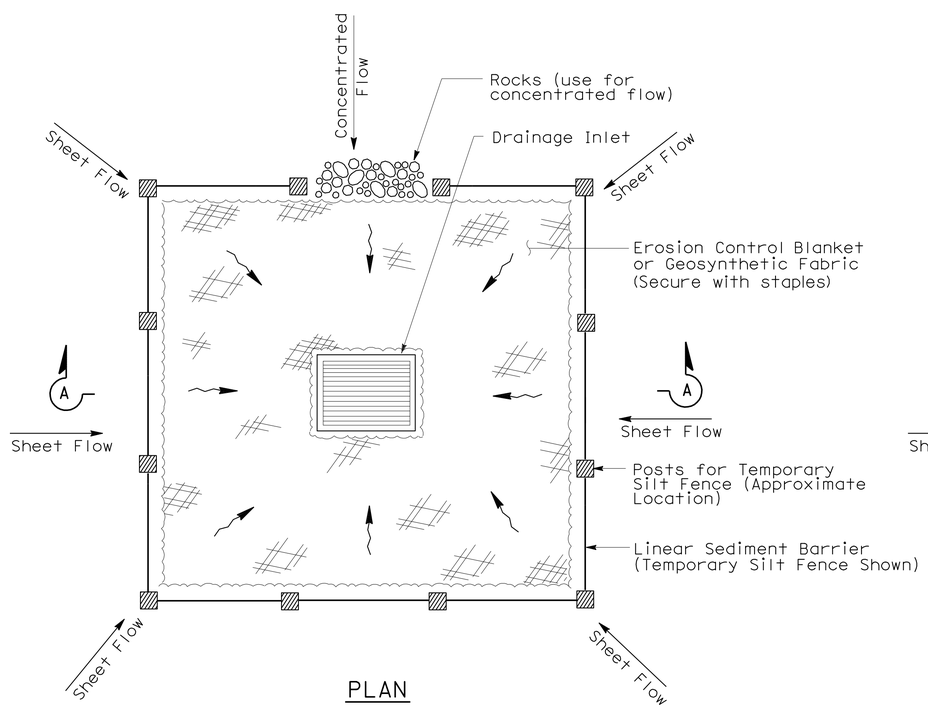

PLAN

TEMPORARY DRAINAGE INLET PROTECTION (TYPE 1)

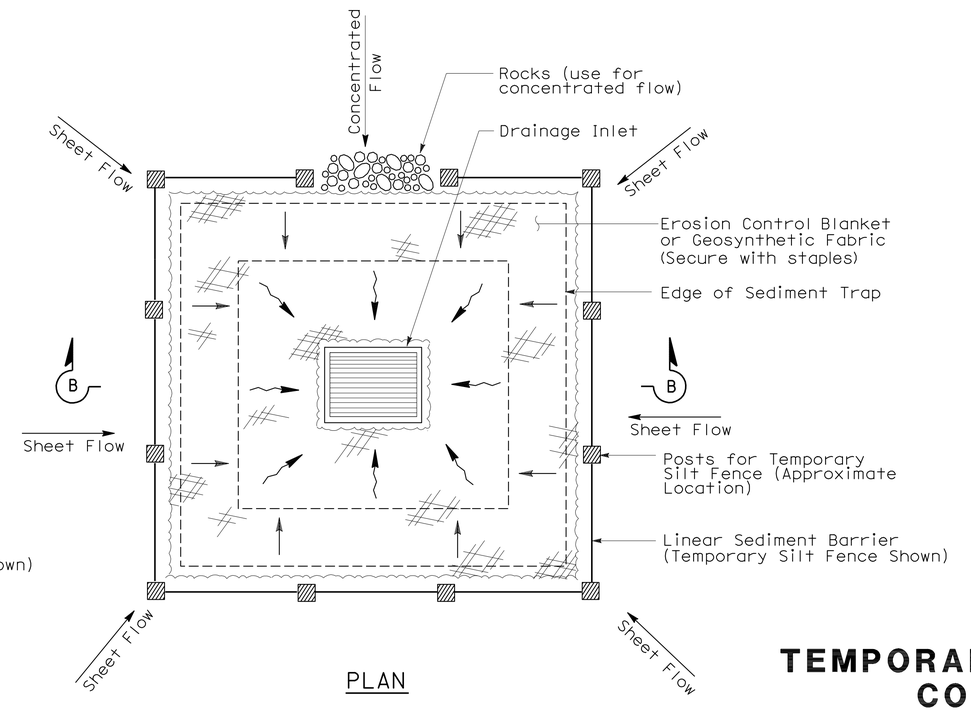

PLAN

TEMPORARY DRAINAGE INLET PROTECTION (TYPE 2) (EXCAVATED SEDIMENT TRAP)

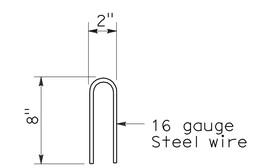

STAPLE DETAIL

STATE OF CALIFORNIA
DEPARTMENT OF TRANSPORTATION

TEMPORARY WATER POLLUTION CONTROL DETAILS (TEMPORARY DRAINAGE INLET PROTECTION)

NO SCALE

NSP T61 DATED AUGUST 15, 2008 SUPPLEMENTS
THE STANDARD PLANS BOOK DATED MAY 2006.

NEW STANDARD PLAN NSP T61

2006 NEW STANDARD PLAN NSP T61

7-11-08

DIST	COUNTY	ROUTE	POST MILES TOTAL PROJECT	SHEET NO.	TOTAL SHEETS
12	Ora	39	18.3/22.6	18	20

LICENSED LANDSCAPE ARCHITECT

August 15, 2008
PLANS APPROVAL DATE

The State of California or its officers or agents shall not be responsible for the accuracy or completeness of electronic copies of this plan sheet.

LICENSED LANDSCAPE ARCHITECT — Robert B. Schott — Signature — 11-04-08 Renewal Date — 08-11-08 Date — STATE OF CALIFORNIA

To accompany plans dated 2-14-11

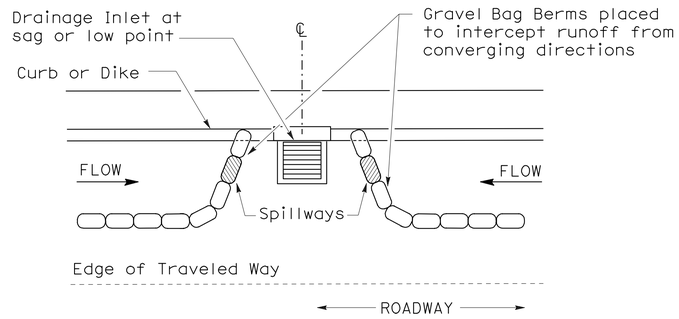

PLAN

CONFIGURATION FOR SAG POINT INLET (GRAVEL BAG BERM)

GRAVEL BAG BERM (TYPE 3A) SPACING TABLE

SLOPE OF ROADWAY (PERCENT)	1 to 3.9	4 to 5.9	6 to 7.9	8 to 10	10+
INTERVAL BETWEEN BERM	100′	75′	50′	25′	12′

For slope of less than 1%, install barriers only if erosion/sediment is prevalent

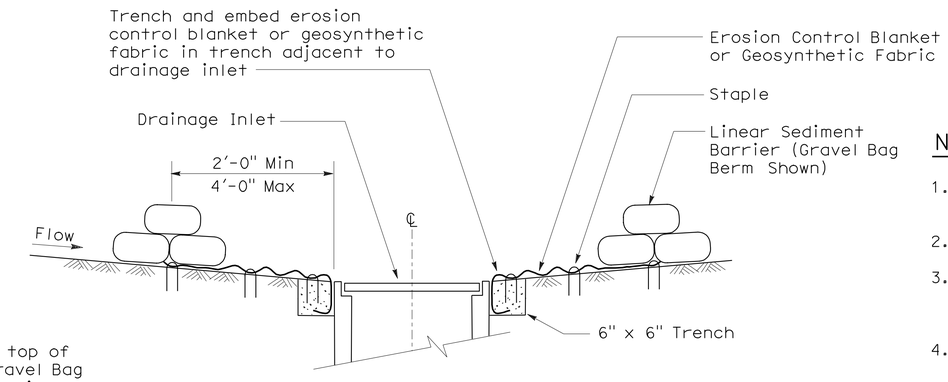

SECTION A-A

NOTES:

1. Place safety cones adjacent to drainage inlet protection.
2. Dimensions may vary to fit field conditions.
3. Install a minimum of 3 gravel bag berms upstream of each drainage inlet to be protected.
4. Position erosion control blanket or geosynthetic fabric at edge of concrete apron and secure in trench.
5. Erosion control blanket or geosynthetic fabric is not required if the area adjacent to the drainage inlet is vegetated or paved.

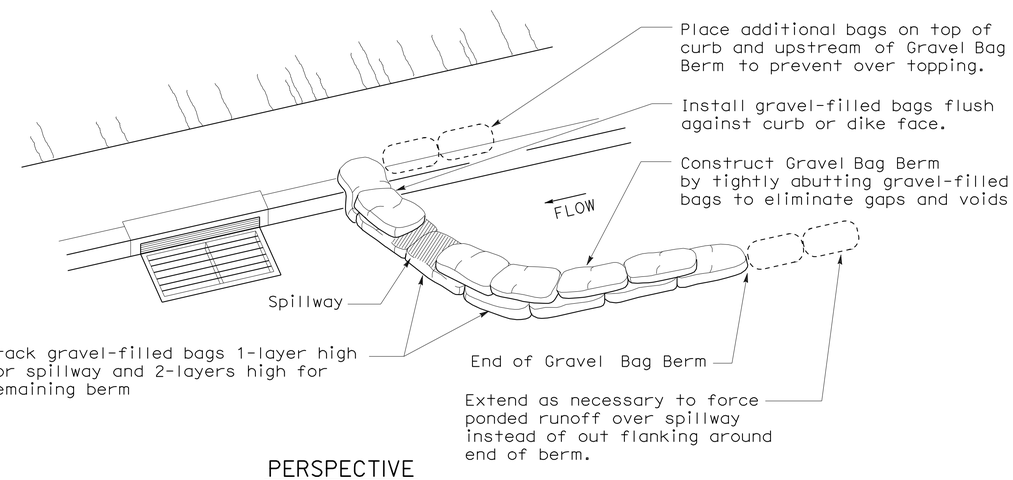

PERSPECTIVE

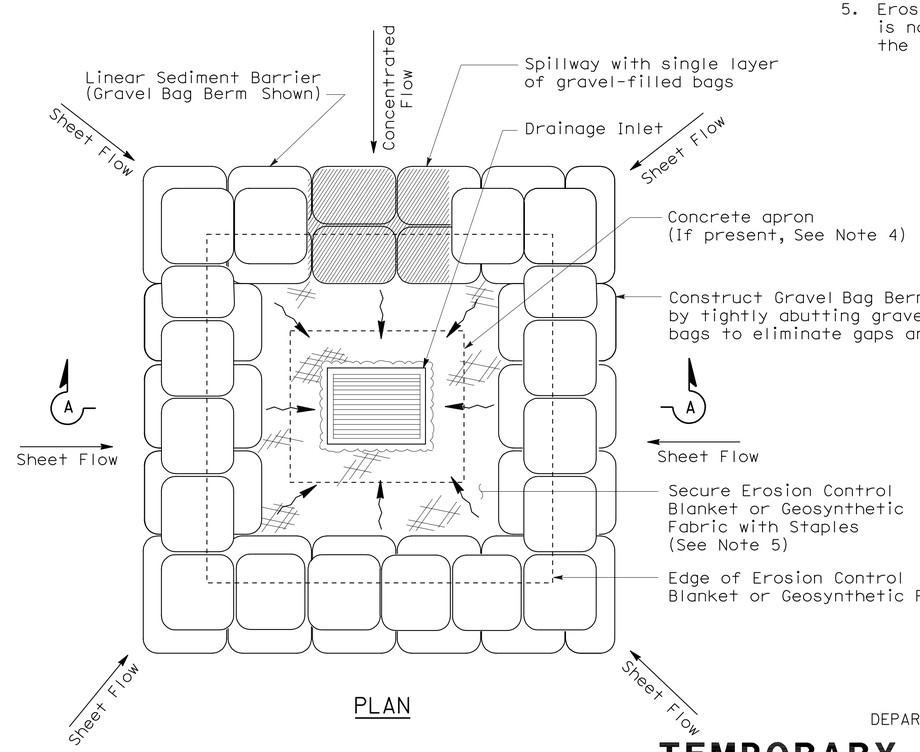

PLAN

TEMPORARY DRAINAGE INLET PROTECTION (TYPE 3B)

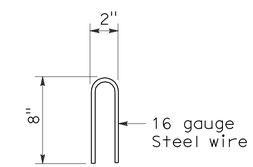

STAPLE DETAIL

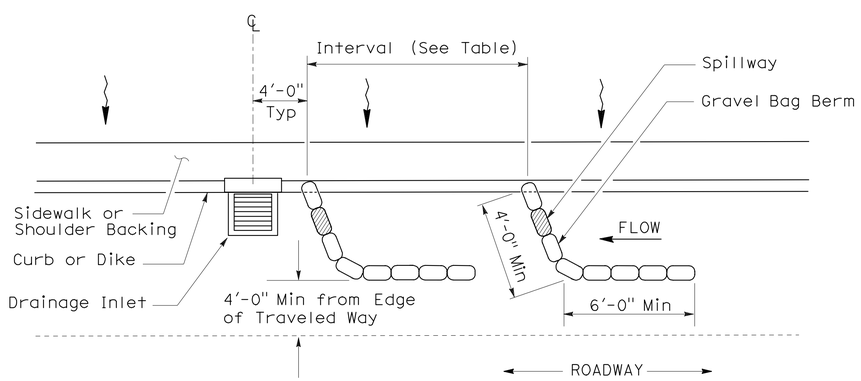

PLAN

TEMPORARY DRAINAGE INLET PROTECTION (TYPE 3A) (GRAVEL BAG BERM)

STATE OF CALIFORNIA
DEPARTMENT OF TRANSPORTATION

TEMPORARY WATER POLLUTION CONTROL DETAILS (TEMPORARY DRAINAGE INLET PROTECTION)

NO SCALE

NSP T62 DATED AUGUST 15, 2008 SUPPLEMENTS THE STANDARD PLANS BOOK DATED MAY 2006.

NEW STANDARD PLAN NSP T62

2006 NEW STANDARD PLAN NSP T62

7-11-08

DIST	COUNTY	ROUTE	POST MILES TOTAL PROJECT	SHEET NO.	TOTAL SHEETS
12	Ora	39	18.3/22.6	19	20

Robert B Schott
LICENSED LANDSCAPE ARCHITECT

August 15, 2008
PLANS APPROVAL DATE

LICENSED LANDSCAPE ARCHITECT Robert B. Schott 3025 Signature 11-04-08 Renewal Date 08-11-08 Date STATE OF CALIFORNIA

The State of California or its officers or agents shall not be responsible for the accuracy or completeness of electronic copies of this plan sheet.

To accompany plans dated 2-14-11

FLEXIBLE SEDIMENT BARRIER SPACING TABLE

SLOPE OF ROADWAY (PERCENT)	0 to 0.9	1 to 1.9	2 to 2.9	3 to 4	5+
INTERVAL BETWEEN BARRIERS	50′	35′	30′	25′	20′
ANGLE FROM FACE OF CURB	70°	70°	70°	45°	45°
SUGGESTED BARRIER LENGTH	6′	6′	6′	6′	6′

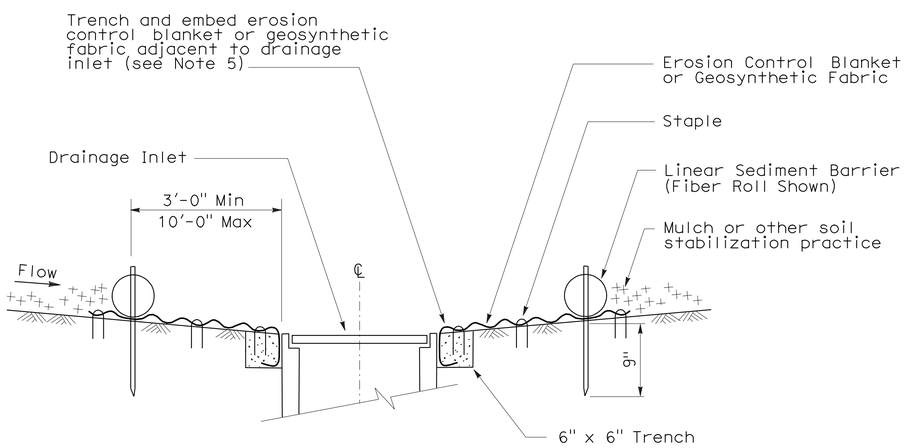

SECTION A-A

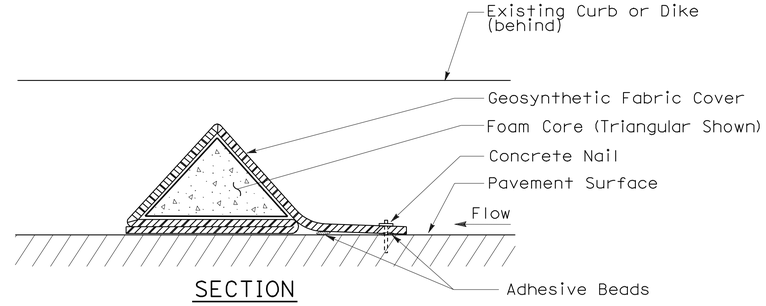

SECTION

FLEXIBLE SEDIMENT BARRIER DETAIL (FOAM BARRIER SHOWN)

NOTES:

1. See Standard Plan T51 for Temporary Silt Fence.
2. Dimensions may vary to fit field conditions.
3. Install a minimum of 3 flexible sediment barriers upstream of each drainage inlet to be protected.
4. Position erosion control blanket or geosynthetic fabric at edge of concrete apron and secure in trench.
5. Erosion control blanket or geosynthetic fabric is not required if the area adjacent to the drainage inlet is vegetated.

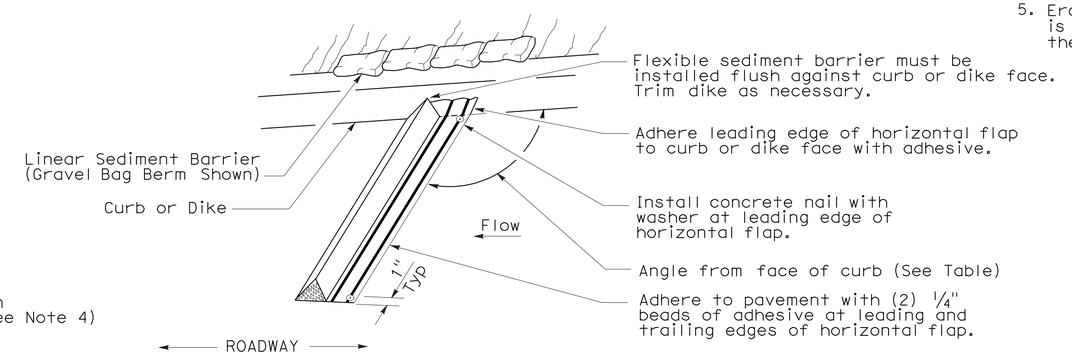

PERSPECTIVE

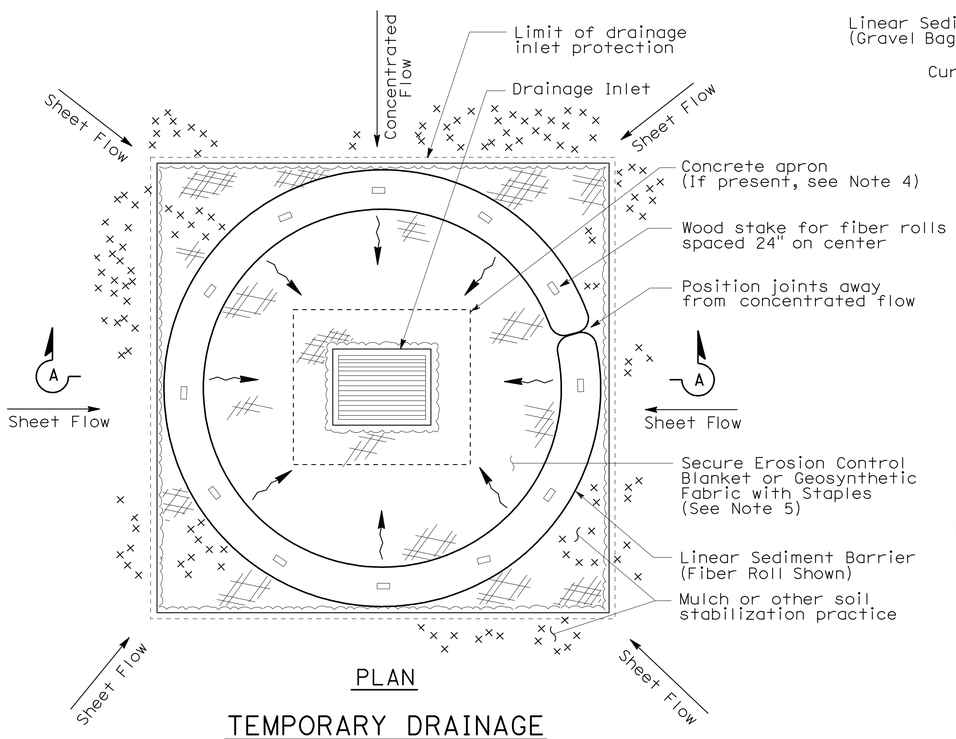

PLAN

TEMPORARY DRAINAGE INLET PROTECTION (TYPE 4A)

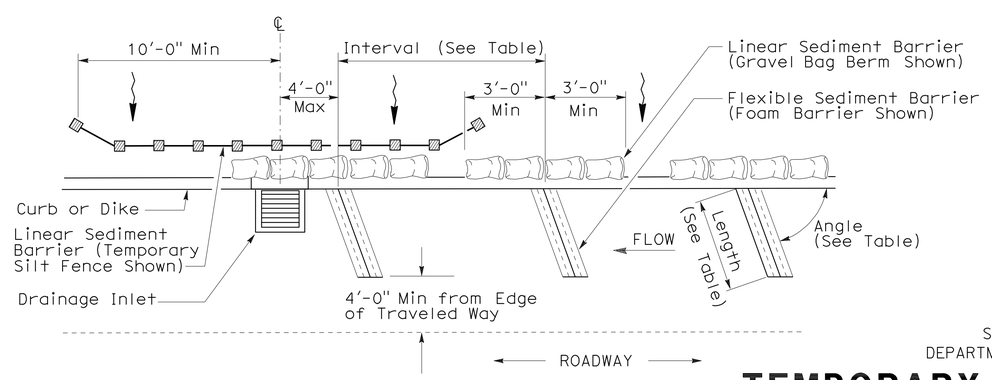

PLAN

TEMPORARY DRAINAGE INLET PROTECTION (TYPE 4B) FLEXIBLE SEDIMENT BARRIER

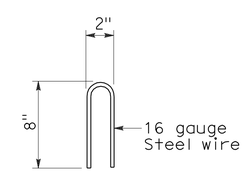

STAPLE DETAIL

STATE OF CALIFORNIA
DEPARTMENT OF TRANSPORTATION

TEMPORARY WATER POLLUTION CONTROL DETAILS (TEMPORARY DRAINAGE INLET PROTECTION)

NO SCALE

NSP T63 DATED AUGUST 15, 2008 SUPPLEMENTS THE STANDARD PLANS BOOK DATED MAY 2006.

NEW STANDARD PLAN NSP T63

2006 NEW STANDARD PLAN NSP T63

7-11-08

DIST	COUNTY	ROUTE	POST MILES TOTAL PROJECT	SHEET NO.	TOTAL SHEETS
12	Ora	39	18.3/22.6	20	20

Robert B Schott
LICENSED LANDSCAPE ARCHITECT

August 15, 2008
PLANS APPROVAL DATE

LICENSED LANDSCAPE ARCHITECT
Robert B. Schott 3695
Signature
11-04-08
Renewal Date
08-11-08
Date
STATE OF CALIFORNIA

The State of California or its officers or agents shall not be responsible for the accuracy or completeness of electronic copies of this plan sheet.

To accompany plans dated 2-14-11

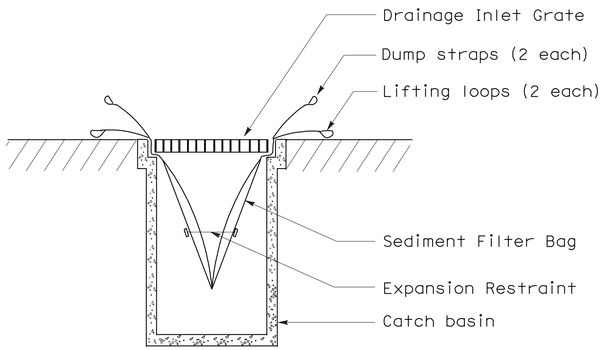

SECTION B-B

SEDIMENT FILTER BAG DETAIL

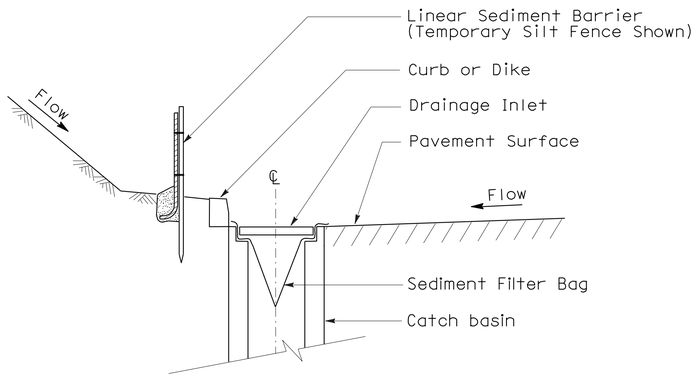

SECTION A-A

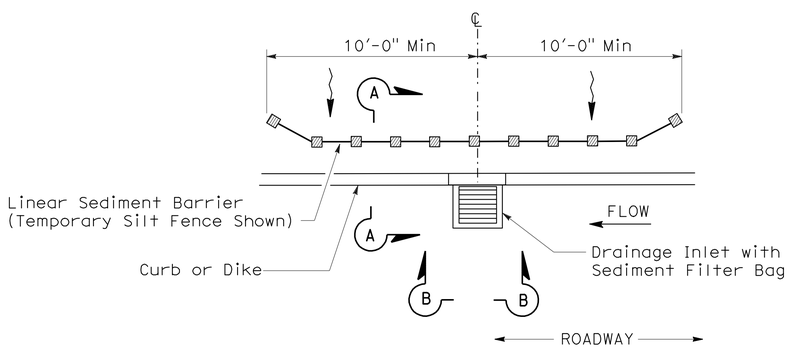

PLAN

TEMPORARY DRAINAGE INLET PROTECTION (TYPE 5) (SEDIMENT FILTER BAG)

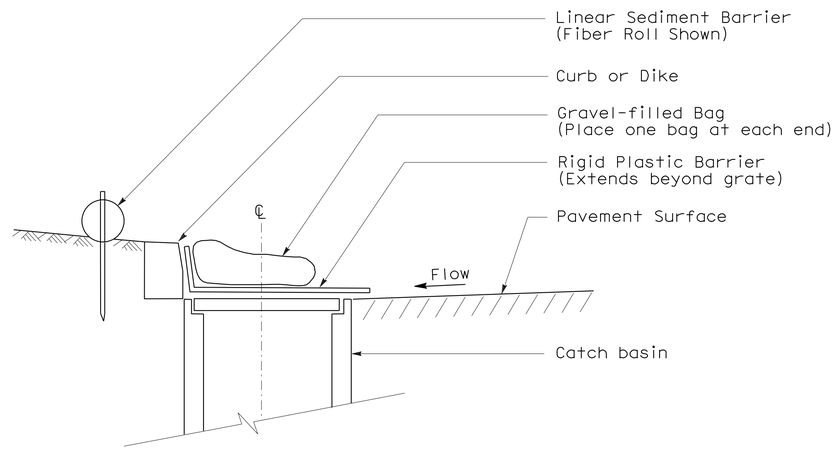

SECTION

TEMPORARY DRAINAGE INLET PROTECTION (TYPE 6A) (CATCH BASIN WITH GRATE)

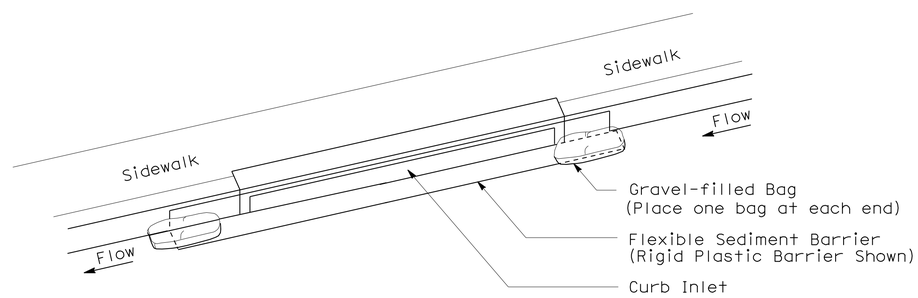

PERSPECTIVE

TEMPORARY DRAINAGE INLET PROTECTION (TYPE 6B) (CURB INLET WITHOUT GRATE)

NOTES:

1. See Standard Plan T51 for Temporary Silt Fence.
2. Dimensions may vary to fit field conditions.

STATE OF CALIFORNIA
DEPARTMENT OF TRANSPORTATION

TEMPORARY WATER POLLUTION CONTROL DETAILS (TEMPORARY DRAINAGE INLET PROTECTION)

NO SCALE

NSP T64 DATED AUGUST 15, 2008 SUPPLEMENTS
THE STANDARD PLANS BOOK DATED MAY 2006.

NEW STANDARD PLAN NSP T64

2006 NEW STANDARD PLAN NSP T64

7-11-08