Dist	COUNTY	ROUTE	POST MILES TOTAL PROJECT	SHEET No.	TOTAL SHEETS
12	Ora	22	12.6	1	34

STATE OF CALIFORNIA

DEPARTMENT OF TRANSPORTATION

PROJECT PLANS FOR CONSTRUCTION ON

STATE HIGHWAY

IN ORANGE COUNTY

IN ORANGE

AT TUSTIN STREET OVERCROSSING AND UNDERCROSSING

TO BE SUPPLEMENTED BY STANDARD PLANS DATED MAY 2006

INDEX OF PLANS

SHEET No.	DESCRIPTION
1	TITLE AND LOCATION MAP
2	LAYOUTS
3	CONSTRUCTION DETAILS
4	UTILITY PLANS
5-8	TRAFFIC HANDLING PLANS
9-10	CONSTRUCTION AREA SIGNS
11	PAVEMENT DELINEATION PLAN, DETAILS AND QUANTITIES
12	SUMMARY OF QUANTITIES
13-15	SIGN PLANS, DETAILS AND QUANTITIES
16-20	ELECTRICAL PLANS
21-34	REVISED AND NEW STANDARD PLANS

THE STANDARD PLANS LIST APPLICABLE TO THIS CONTRACT IS INCLUDED IN THE NOTICE TO BIDDERS AND SPECIAL PROVISIONS BOOK.

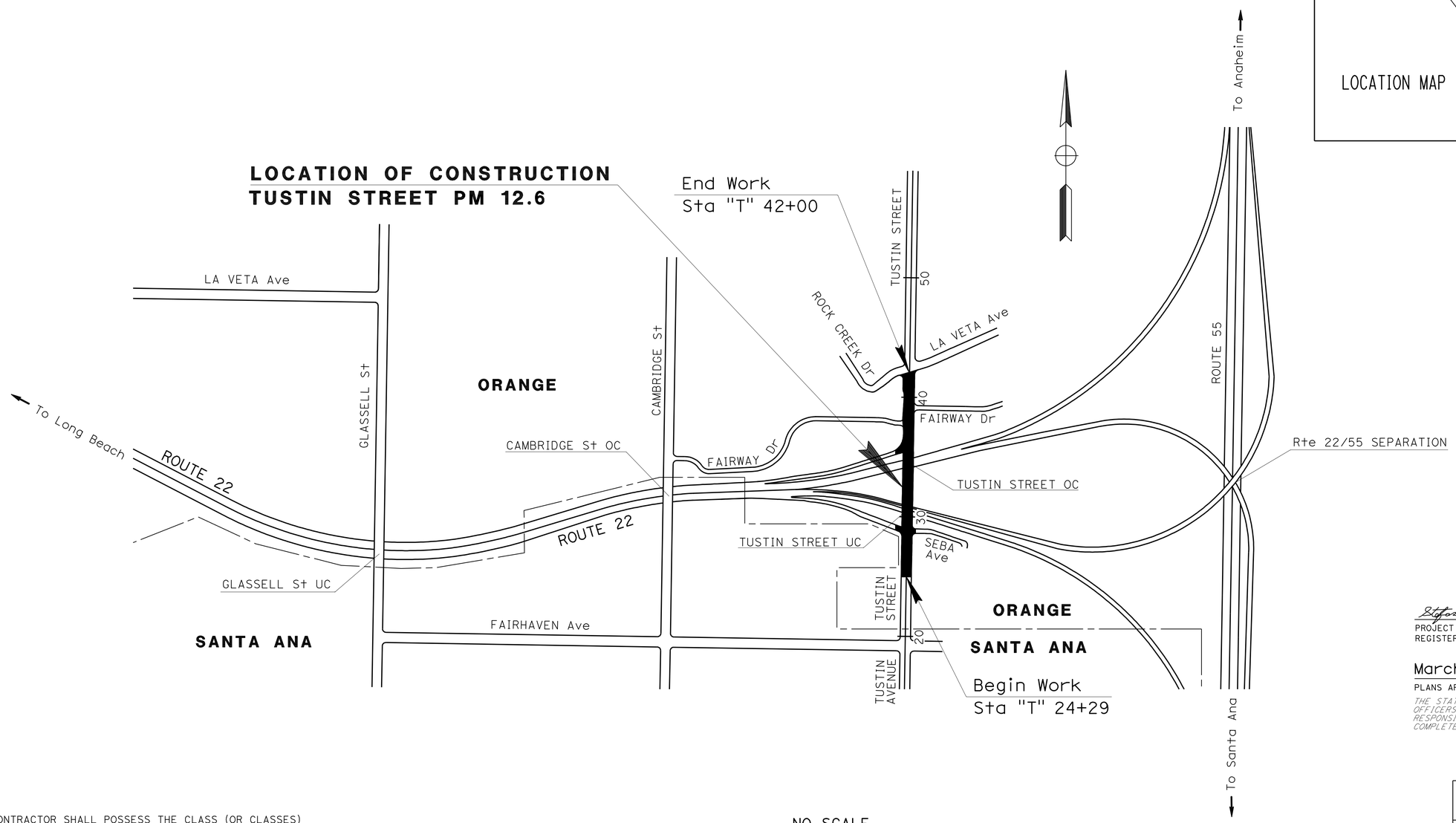

Stefan Hoffmeister 1/26/10
PROJECT ENGINEER DATE
REGISTERED CIVIL ENGINEER

March 8, 2010
PLANS APPROVAL DATE

REGISTERED PROFESSIONAL ENGINEER
STEFAN HOFFMEISTER
No. 70129
Exp. 9/30/10
CIVIL
STATE OF CALIFORNIA

THE STATE OF CALIFORNIA OR ITS OFFICERS OR AGENTS SHALL NOT BE RESPONSIBLE FOR THE ACCURACY OR COMPLETENESS OF SCANNED COPIES OF THIS PLAN SHEET.

RBF CONSULTING
14725 ALTON PKWY
IRVINE, CA 92618

CONTRACT No. **12-0K5804**

THE CONTRACTOR SHALL POSSESS THE CLASS (OR CLASSES) OF LICENSE AS SPECIFIED IN THE "NOTICE TO BIDDERS."

NO SCALE

APPROVED AS TO IMPACT ON STATE FACILITIES AND CONFORMANCE WITH APPLICABLE STATE STANDARDS AND PRACTICES AND THAT TECHNICAL OVERSIGHT WAS PERFORMED.

08-MAR-2010 12:56

trmikesl

CONSULTANT DESIGN ENGINEER	REGISTRATION No.	LICENSE Exp DATE	DATE SIGNED
STEFAN HOFFMEISTER	C63419	09-30-10	01-27-10

CALTRANS DESIGN OVERSIGHT APPROVAL
CHARLES MAKSOUDIAN

U:\d0K580\mainline\c0K580ab001.dgn

LAST REVISION 01-25-10
DATE PLOTTED => 08-MAR-2010
TIME PLOTTED => 12:56

Dist	COUNTY	ROUTE	POST MILES TOTAL PROJECT	SHEET No.	TOTAL SHEETS
12	Ora	22	12.6	2	34

REGISTERED CIVIL ENGINEER 1/26/10 DATE

3-8-10
PLANS APPROVAL DATE

REGISTERED PROFESSIONAL ENGINEER STEFAN HOFFMEISTER No. 70129 Exp 9/30/10 CIVIL STATE OF CALIFORNIA

THE STATE OF CALIFORNIA OR ITS OFFICERS OR AGENTS SHALL NOT BE RESPONSIBLE FOR THE ACCURACY OR COMPLETENESS OF SCANNED COPIES OF THIS PLAN SHEET.

RBF CONSULTING
14725 ALTON PKWY
IRVINE, CA. 92618-2027

NOTE:

1. FOR ACCURATE RIGHT OF WAY AND ACCESS DATA, CONTACT RIGHT OF WAY ENGINEERING AT THE DISTRICT OFFICE.

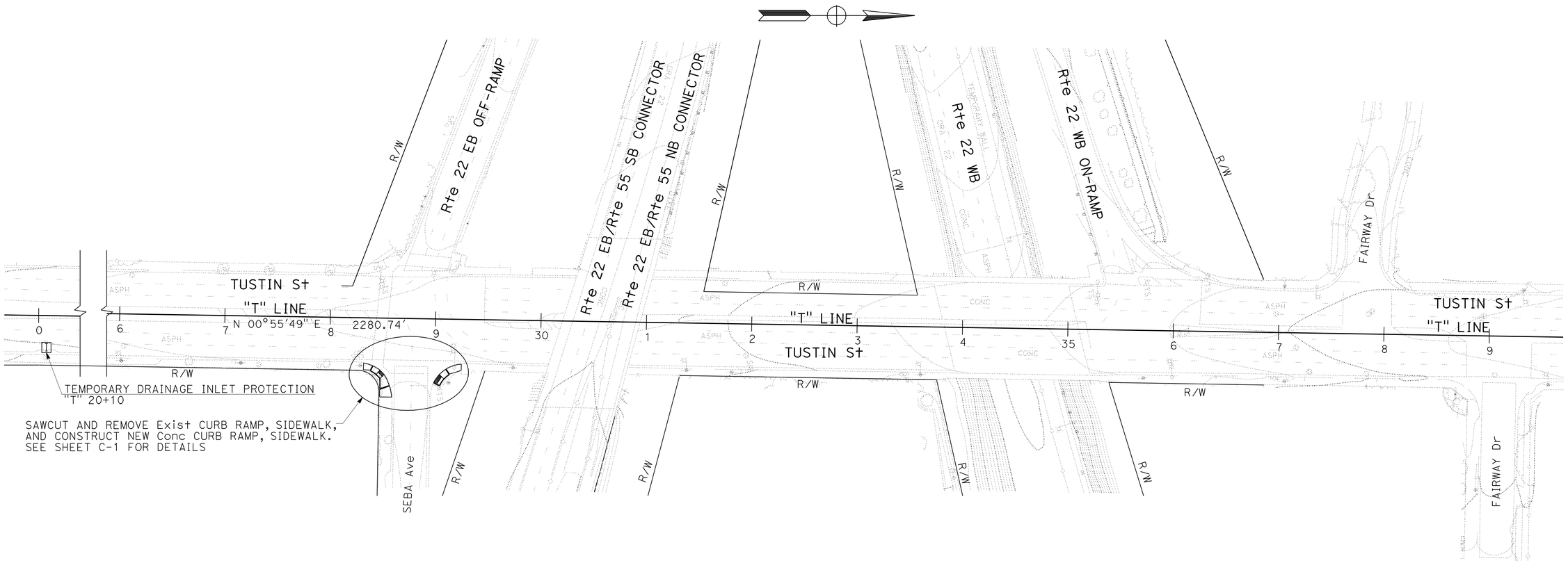

LAYOUT

SCALE: 1" = 50'

L-1

STATE OF CALIFORNIA - DEPARTMENT OF TRANSPORTATION
Caltrans

CONSULTANT FUNCTIONAL SUPERVISOR: MIKE CHESNEY
CALCULATED-DESIGNED BY: STEFAN HOFFMEISTER
CHECKED BY: RANDY RATZLAFF
REVISED BY
DATE REVISED

H:\pdata\10106777\CADD\TransPW\Cad_Out\FINAL\DGN\c0K580ea001.dgn
trmikesl 08-MAR-2010 12:44

LAST REVISION 01-05-10
DATE PLOTTED => 08-MAR-2010
TIME PLOTTED => 12:44

Dist	COUNTY	ROUTE	POST MILES TOTAL PROJECT	SHEET No.	TOTAL SHEETS
12	Ora	22	12.6	3	34

REGISTERED CIVIL ENGINEER 1/26/10 DATE

3-8-10
PLANS APPROVAL DATE

REGISTERED PROFESSIONAL ENGINEER STEFAN HOFFMEISTER No. 70129 Exp. 9/30/10 CIVIL STATE OF CALIFORNIA

THE STATE OF CALIFORNIA OR ITS OFFICERS OR AGENTS SHALL NOT BE RESPONSIBLE FOR THE ACCURACY OR COMPLETENESS OF SCANNED COPIES OF THIS PLAN SHEET.

RBF CONSULTING
14725 ALTON PKWY
IRVINE, CA. 92618-2027

NOTES:

1. FOR ACCURATE RIGHT OF WAY AND ACCESS DATA, CONTACT RIGHT OF WAY ENGINEERING AT THE DISTRICT OFFICE.
2. SAWCUT Exist Conc CURB TO CONFORM TO SLOPE OF NEW CURB RAMP AND FLARE.

ABBREVIATIONS:

PIP	TO REMAIN IN PLACE
BW	BACK OF SIDEWALK
TCB	BACK OF CURB

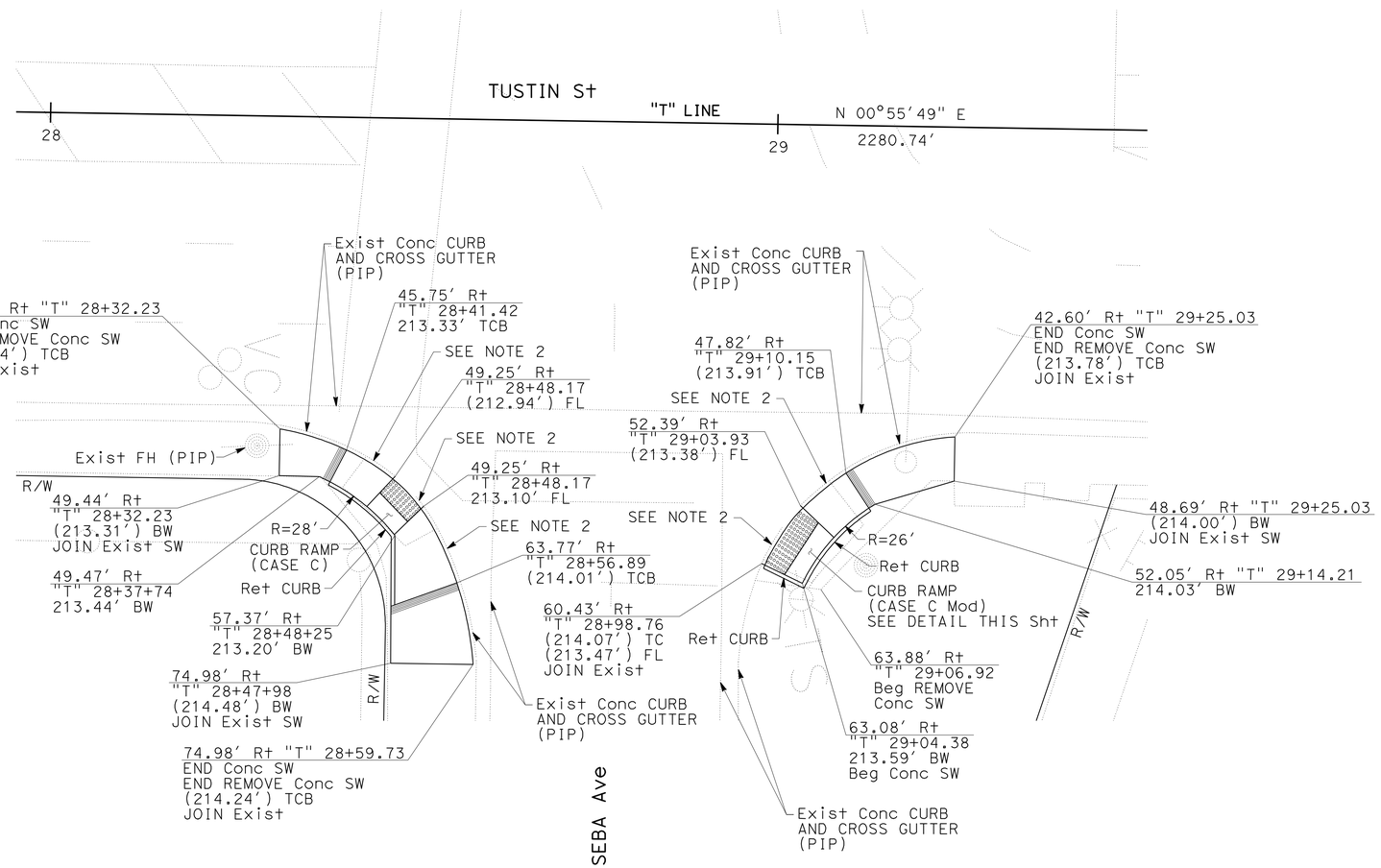

SCALE: 1" = 10'

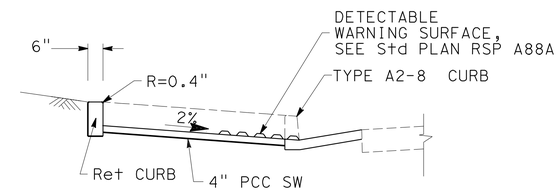

SECTION B-B

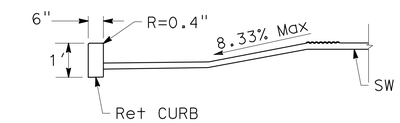

SECTION A-A

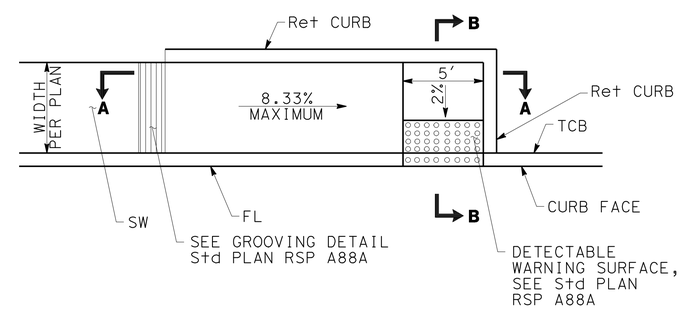

CASE C Mod CURB RAMP DETAIL

NO SCALE

CONSTRUCTION DETAILS

C-1

STATE OF CALIFORNIA - DEPARTMENT OF TRANSPORTATION
Caltrans

CONSULTANT FUNCTIONAL SUPERVISOR	CALCULATED-DESIGNED BY	CHECKED BY	REVISED BY	DATE REVISED
MIKE CHESNEY	STEFAN HOFFMEISTER	RANDY RATZLAFF		

H:\pdata\10106777\CADD\TransPW\Cad_Out\FINAL\DGN\c0K580ga001.dgn trmikesl 08-MAR-2010 12:45

LAST REVISION 01-05-10 | DATE PLOTTED => 08-MAR-2010 | TIME PLOTTED => 12:45

Dist	COUNTY	ROUTE	POST MILES TOTAL PROJECT	SHEET No.	TOTAL SHEETS
12	Ora	22	12.6	4	34

REGISTERED CIVIL ENGINEER 1/26/10 DATE

3-8-10
PLANS APPROVAL DATE

REGISTERED PROFESSIONAL ENGINEER STEFAN HOFFMEISTER No. 70129 Exp 9/30/10 CIVIL STATE OF CALIFORNIA

THE STATE OF CALIFORNIA OR ITS OFFICERS OR AGENTS SHALL NOT BE RESPONSIBLE FOR THE ACCURACY OR COMPLETENESS OF SCANNED COPIES OF THIS PLAN SHEET.

RBF CONSULTING
14725 ALTON PKWY
IRVINE, CA. 92618-2027

NOTES:

1. FOR ACCURATE RIGHT OF WAY AND ACCESS DATA, CONTACT RIGHT OF WAY ENGINEERING AT THE DISTRICT OFFICE.
2. LOCATIONS OF UTILITY FACILITIES SHOWN ON THESE PLANS ARE APPROXIMATE AND SHALL BE VERIFIED BY THE CONTRACTOR PRIOR TO CONSTRUCTION.

LEGEND:

⊗ - POT HOLE LOCATION

ABBREVIATIONS:

COO CITY OF ORANGE
DIP DUCTILE IRON PIPE
UG UNDER GROUND

UTILITY OWNERSHIP ON THIS PROJECT:
MWD - METROPOLITAN WATER DISTRICT
SCE - SOUTHERN CALIFORNIA EDISON
SCG - SOUTHERN CALIFORNIA GAS COMPANY
TWC - TIME WARNER CABLE
AT&T - AT&T CALIFORNIA (AT&T/PACBELL/SBC)
L3 - LEVEL 3 COMMUNICATIONS
VERIZON - VERIZON COMMUNICATIONS

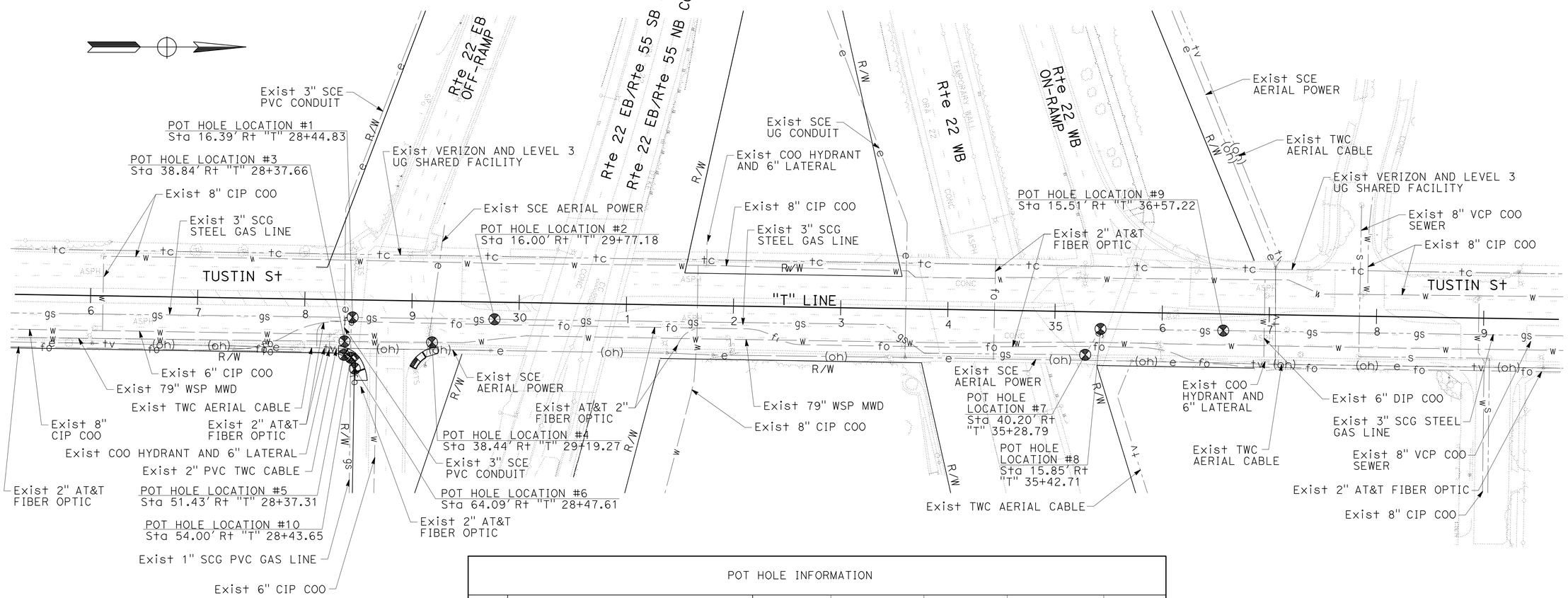

POT HOLE INFORMATION

No.	FACILITY	STATION	OFFSET	OG Elev	TOP OF FACILITY Elev	DEPTH
1	3" GAS (STEEL)	28+44.83	16.39' Rt	213.49'	210.08'	3.41'
2	3" GAS (STEEL)	29+77.18	16.00' Rt	214.39'	210.94'	3.45'
3	79" WELDED STEEL PIPE (WATER)	28+37.66	38.84' Rt	212.62'	204.14'	8.48'
	3" SCE CONDUIT (PVC)			212.62'	209.54'	3.08'
4	79" WELDED STEEL PIPE (WATER)	29+19+27	38.44' Rt	213.20'	204.72'	8.48'
5	2" AT&T FIBER OPTIC	28+37.31	51.43' Rt	213.55'	210.71'	2.84'
	2" TWC CABLE (PVC)			213.55'	210.71'	2.84'
6	2" AT&T FIBER OPTIC	28+47.61	64.09' Rt	214.24'	210.75'	3.49'
7	3" GAS (STEEL)	35+28.79	40.20' Rt	219.88'	217.91'	1.97'
8	3" GAS (STEEL)	35+42.71	15.85' Rt	220.72'	216.60'	4.12'
9	3" GAS (STEEL)	36+57.22	15.51' Rt	222.02'	219.22'	2.80'
10	1" GAS (PVC)	28+43.65	54.00' Rt	213.79'	209.86'	3.93'

UTILITY PLAN

SCALE: 1" = 50'

THIS PLAN ACCURATE FOR UTILITY INFORMATION ONLY

U-1

STATE OF CALIFORNIA - DEPARTMENT OF TRANSPORTATION
Caltrans
CONSULTANT FUNCTIONAL SUPERVISOR: MIKE CHESNEY
CHECKED BY: RANDY RATZLAFF
CALCULATED-DESIGNED BY: STEFAN HOFFMEISTER
REVISED BY / DATE REVISED
H:\pdata\10106777\CADD\TransPW\Cad_Out\FINAL\DGN\c0K580ka001.dgn trmikesl 08-MAR-2010 12:45

LAST REVISION 01-25-10 | DATE PLOTTED => 08-MAR-2010 | TIME PLOTTED => 12:45

BORDER LAST REVISED 4/11/2008 | RELATIVE BORDER SCALE IS IN INCHES 0 1 2 3 | USERNAME => trmikesl | DGN FILE => c0K580ka001.dgn | CU 12221 | EA 0K5801

Dist	COUNTY	ROUTE	POST MILES TOTAL PROJECT	SHEET No.	TOTAL SHEETS
12	Ora	22	12.6	5	34

REGISTERED CIVIL ENGINEER 1/26/10 DATE

3-8-10
PLANS APPROVAL DATE

REGISTERED PROFESSIONAL ENGINEER ARMANDO SOLIS No. 72012 Exp 9/30/10 CIVIL STATE OF CALIFORNIA

THE STATE OF CALIFORNIA OR ITS OFFICERS OR AGENTS SHALL NOT BE RESPONSIBLE FOR THE ACCURACY OR COMPLETENESS OF SCANNED COPIES OF THIS PLAN SHEET.

RBF CONSULTING
14725 ALTON PKWY
IRVINE, CA. 92618-2027

NOTES:

1. FOR ACCURATE RIGHT OF WAY AND ACCESS DATA, CONTACT RIGHT OF WAY ENGINEERING AT THE DISTRICT OFFICE.
2. DURING STRIPING AND LOOP DETECTION INSTALLATION, IF BOTH NB LEFT TURN LANES AT THE TUSTIN St/WB SR-22 INTERSECTION ARE TEMPORARILY CLOSED, THE CONTRACTOR SHALL PROHIBIT U-TURN MOVEMENTS WITH R3-4 SIGNS AT FAIRHAVEN Dr AND LA VETA Ave.

LEGEND:

- [E] EXISTING SIGN AND/OR STRIPING TO REMAIN
- CONSTRUCTION AREA
- TYPE II BARRICADE WITH SIGN AS NOTED
- TRAFFIC CONE
- FLASHING ARROW SIGN (FAS)
- TEMPORARY SIGN
- DIRECTION OF TRAVEL
- 12′ CONSTRUCTION LANE DIMENSION
- (12′) EXISTING LANE DIMENSIONS

CONSTRUCTION NOTES:

- [1] INSTALL TEMPORARY SIGN, BARRICADES, CONES OR FLASHING ARROW SIGN AS NOTED
- [2] COVER SIGN

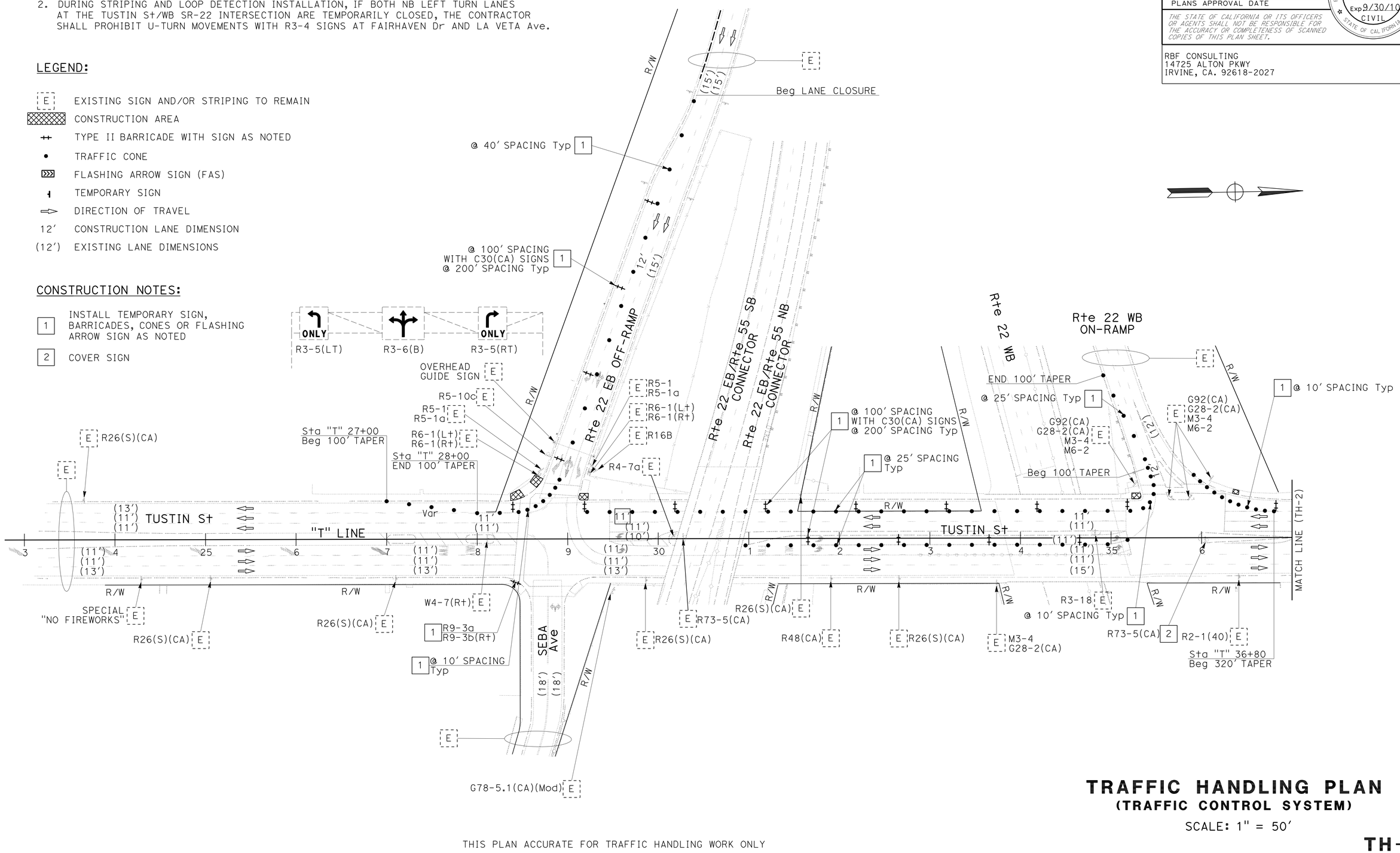

TRAFFIC HANDLING PLAN
(TRAFFIC CONTROL SYSTEM)

SCALE: 1" = 50′

THIS PLAN ACCURATE FOR TRAFFIC HANDLING WORK ONLY

TH-1

STATE OF CALIFORNIA - DEPARTMENT OF TRANSPORTATION
Caltrans

CONSULTANT FUNCTIONAL SUPERVISOR: MARK ESPOSITO
CALCULATED-DESIGNED BY: ROSALVA NAVARRO
CHECKED BY: ARMANDO SOLIS
REVISED BY / DATE REVISED

H:\pdata\10106777\CADD\TransPW\Cad_Out\FINAL\DGN\c0K580md001.dgn trmikesl 08-MAR-2010 12:45

LAST REVISION 01-25-10
DATE PLOTTED => 08-MAR-2010
TIME PLOTTED => 12:45

Dist	COUNTY	ROUTE	POST MILES TOTAL PROJECT	SHEET No.	TOTAL SHEETS
12	Ora	22	12.6	6	34

REGISTERED CIVIL ENGINEER 1/26/10 DATE

3-8-10
PLANS APPROVAL DATE

REGISTERED PROFESSIONAL ENGINEER ARMANDO SOLIS No. 72012 Exp 9/30/10 CIVIL STATE OF CALIFORNIA

THE STATE OF CALIFORNIA OR ITS OFFICERS OR AGENTS SHALL NOT BE RESPONSIBLE FOR THE ACCURACY OR COMPLETENESS OF SCANNED COPIES OF THIS PLAN SHEET.

RBF CONSULTING
14725 ALTON PKWY
IRVINE, CA. 92618-2027

NOTES:

1. FOR ACCURATE RIGHT OF WAY AND ACCESS DATA, CONTACT RIGHT OF WAY ENGINEERING AT THE DISTRICT OFFICE.
2. FOR LEGEND, CONSTRUCTION NOTES, AND GENERAL NOTES, SEE SHEET TH-1.

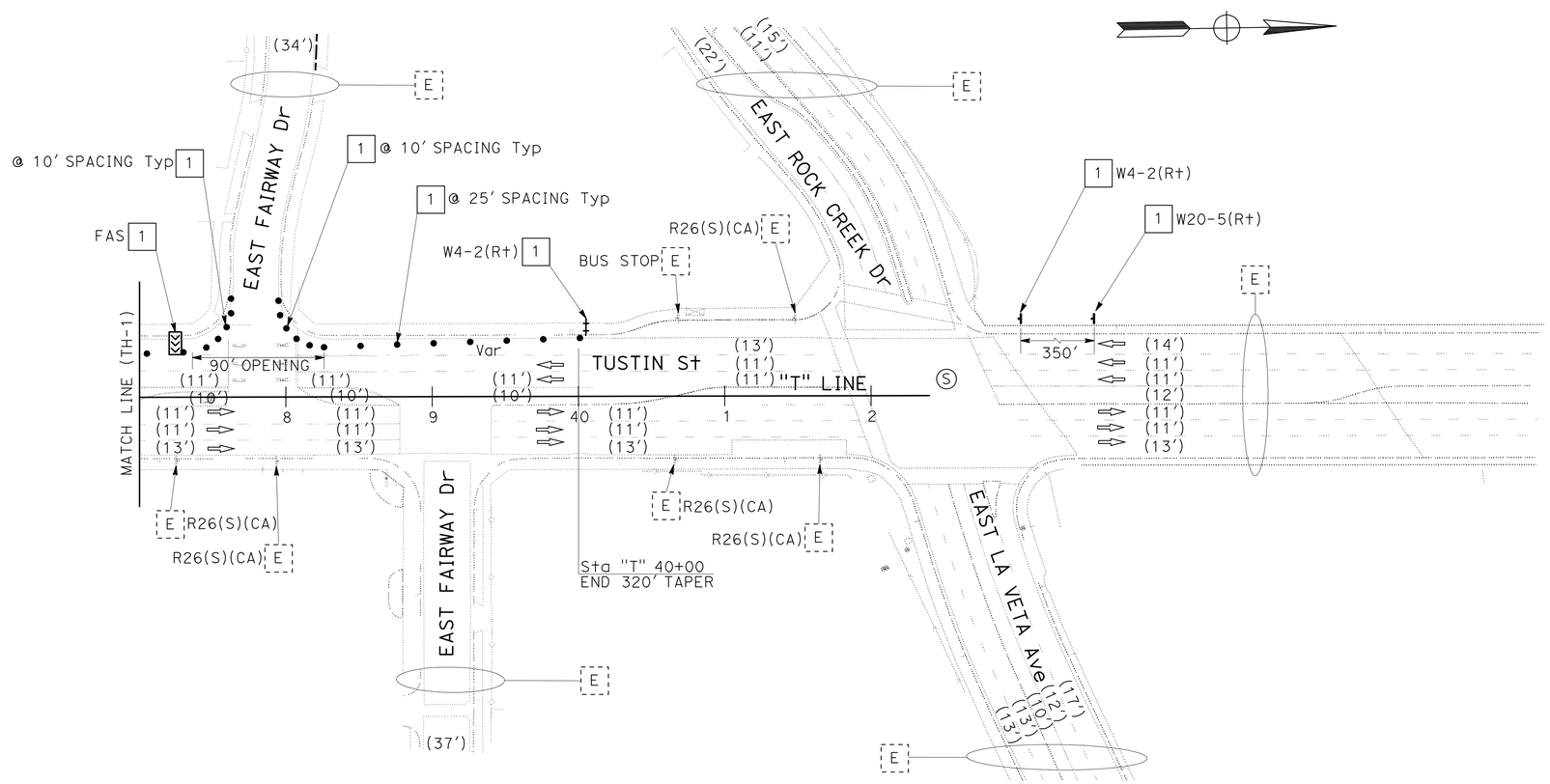

TRAFFIC HANDLING PLAN
(TRAFFIC CONTROL SYSTEM)

SCALE: 1" = 50'

THIS PLAN ACCURATE FOR TRAFFIC HANDLING WORK ONLY

TH-2

LAST REVISION 01-25-10 | DATE PLOTTED => 08-MAR-2010 | TIME PLOTTED => 12:45

STATE OF CALIFORNIA - DEPARTMENT OF TRANSPORTATION
Caltrans
CONSULTANT FUNCTIONAL SUPERVISOR: MARK ESPOSITO
CALCULATED-DESIGNED BY: ROSALVA NAVARRO
CHECKED BY: ARMANDO SOLIS
REVISED BY
DATE REVISED
H:\pdata\10106777\CADD\TransPW\Cad_Out\FINAL\DGN\c0K580md002.dgn trmikesl 08-MAR-2010 12:45

Dist	COUNTY	ROUTE	POST MILES TOTAL PROJECT	SHEET No.	TOTAL SHEETS
12	Ora	22	12.6	7	34

REGISTERED CIVIL ENGINEER 1/26/10 DATE

3-8-10
PLANS APPROVAL DATE

REGISTERED PROFESSIONAL ENGINEER ARMANDO SOLIS No. 72012 Exp 9/30/10 CIVIL STATE OF CALIFORNIA

THE STATE OF CALIFORNIA OR ITS OFFICERS OR AGENTS SHALL NOT BE RESPONSIBLE FOR THE ACCURACY OR COMPLETENESS OF SCANNED COPIES OF THIS PLAN SHEET.

RBF CONSULTING
14725 ALTON PKWY
IRVINE, CA. 92618-2027

NOTES:

1. FOR ACCURATE RIGHT OF WAY AND ACCESS DATA, CONTACT RIGHT OF WAY ENGINEERING AT THE DISTRICT OFFICE.
2. FOR LEGEND, CONSTRUCTION NOTES, AND GENERAL NOTES, SEE SHEET TH-1.

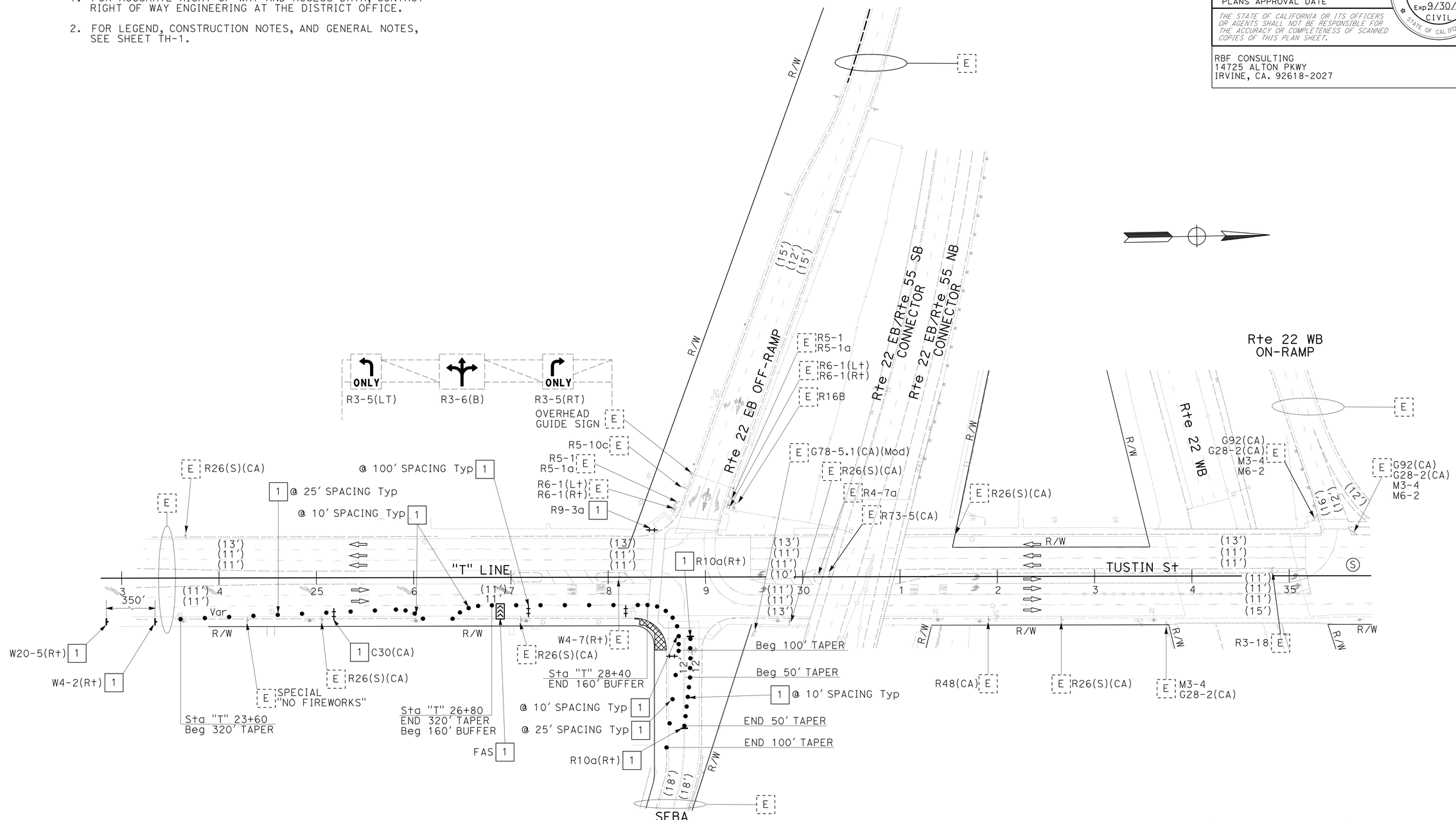

TRAFFIC HANDLING PLAN

(TRAFFIC CONTROL SYSTEM)

SCALE: 1" = 50'

THIS PLAN ACCURATE FOR TRAFFIC HANDLING WORK ONLY

TH-3

REVISED BY	DATE REVISED

CALCULATED-DESIGNED BY: ROSALVA NAVARRO
CHECKED BY: ARMANDO SOLIS
CONSULTANT FUNCTIONAL SUPERVISOR: MARK ESPOSITO

STATE OF CALIFORNIA - DEPARTMENT OF TRANSPORTATION
Caltrans

H:\pdata\10106777\CADD\TransPW\Cad_Out\FINAL\DGN\c0K580md003.dgn
trmikesl 08-MAR-2010 12:45

LAST REVISION 01-25-10
DATE PLOTTED => 08-MAR-2010
TIME PLOTTED => 12:45

Dist	COUNTY	ROUTE	POST MILES TOTAL PROJECT	SHEET No.	TOTAL SHEETS
12	Ora	22	12.6	8	34

REGISTERED CIVIL ENGINEER 1/26/10 DATE

3-8-10
PLANS APPROVAL DATE

REGISTERED PROFESSIONAL ENGINEER ARMANDO SOLIS No. 72012 Exp 9/30/10 CIVIL STATE OF CALIFORNIA

THE STATE OF CALIFORNIA OR ITS OFFICERS OR AGENTS SHALL NOT BE RESPONSIBLE FOR THE ACCURACY OR COMPLETENESS OF SCANNED COPIES OF THIS PLAN SHEET.

RBF CONSULTING
14725 ALTON PKWY
IRVINE, CA. 92618-2027

NOTES:

1. FOR ACCURATE RIGHT OF WAY AND ACCESS DATA, CONTACT RIGHT OF WAY ENGINEERING AT THE DISTRICT OFFICE.
2. FOR LEGEND, CONSTRUCTION NOTES, AND GENERAL NOTES, SEE SHEET TH-1.

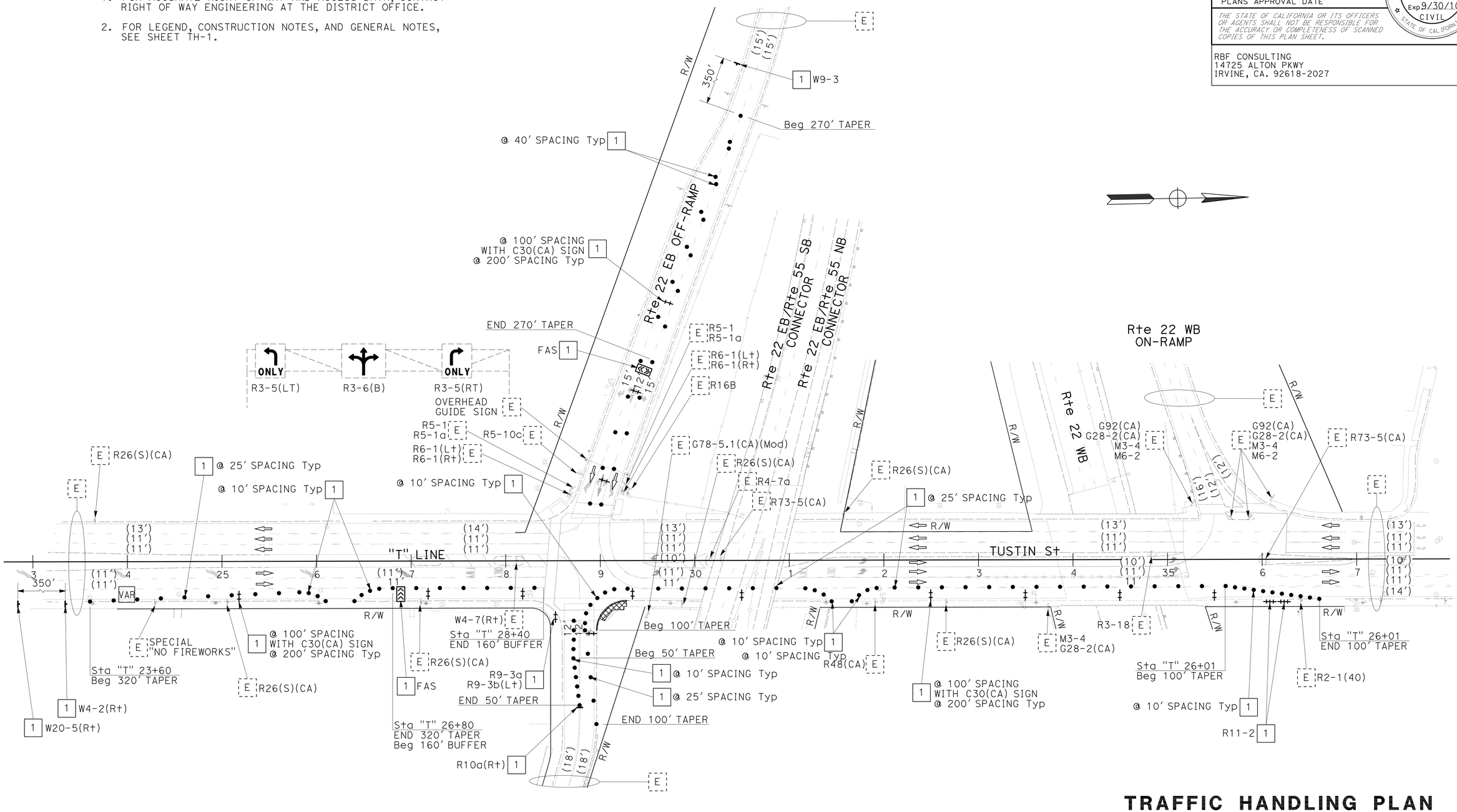

TRAFFIC HANDLING PLAN

(TRAFFIC CONTROL SYSTEM)

SCALE: 1" = 50'

THIS PLAN ACCURATE FOR TRAFFIC HANDLING WORK ONLY

TH-4

REVISED BY	DATE REVISED

CALCULATED-DESIGNED BY: ROSALVA NAVARRO
CHECKED BY: ARMANDO SOLIS
CONSULTANT FUNCTIONAL SUPERVISOR: MARK ESPOSITO

STATE OF CALIFORNIA - DEPARTMENT OF TRANSPORTATION

Caltrans

H:\pdata\10106777\CADD\TransPW\Cad_Out\FINAL\DGN\c0K580md004.dgn trmikesl 08-MAR-2010 12:45

LAST REVISION 01-25-10
DATE PLOTTED => 08-MAR-2010
TIME PLOTTED => 12:45

Dist	COUNTY	ROUTE	POST MILES TOTAL PROJECT	SHEET No.	TOTAL SHEETS
12	Ora	22	12.6	9	34

REGISTERED CIVIL ENGINEER 1/26/10 DATE

3-8-10
PLANS APPROVAL DATE

REGISTERED PROFESSIONAL ENGINEER ARMANDO SOLIS No. 72012 Exp 9/30/10 CIVIL STATE OF CALIFORNIA

THE STATE OF CALIFORNIA OR ITS OFFICERS OR AGENTS SHALL NOT BE RESPONSIBLE FOR THE ACCURACY OR COMPLETENESS OF SCANNED COPIES OF THIS PLAN SHEET.

RBF CONSULTING
14725 ALTON PKWY
IRVINE, CA. 92618-2027

LEGEND:

(1) CONSTRUCTION AREA SIGN No.

(A) CONSTRUCTION AREA SIGN (SIDEWALK CLOSURE) WITH LETTER

‡ TYPE II BARRICADE WITH SIGN AS NOTED

NOTES:

1. LOCATIONS OF CONSTRUCTION AREA SIGNS SHOWN ARE APPROXIMATE. EXACT LOCATIONS WILL BE DETERMINED BY THE ENGINEER.

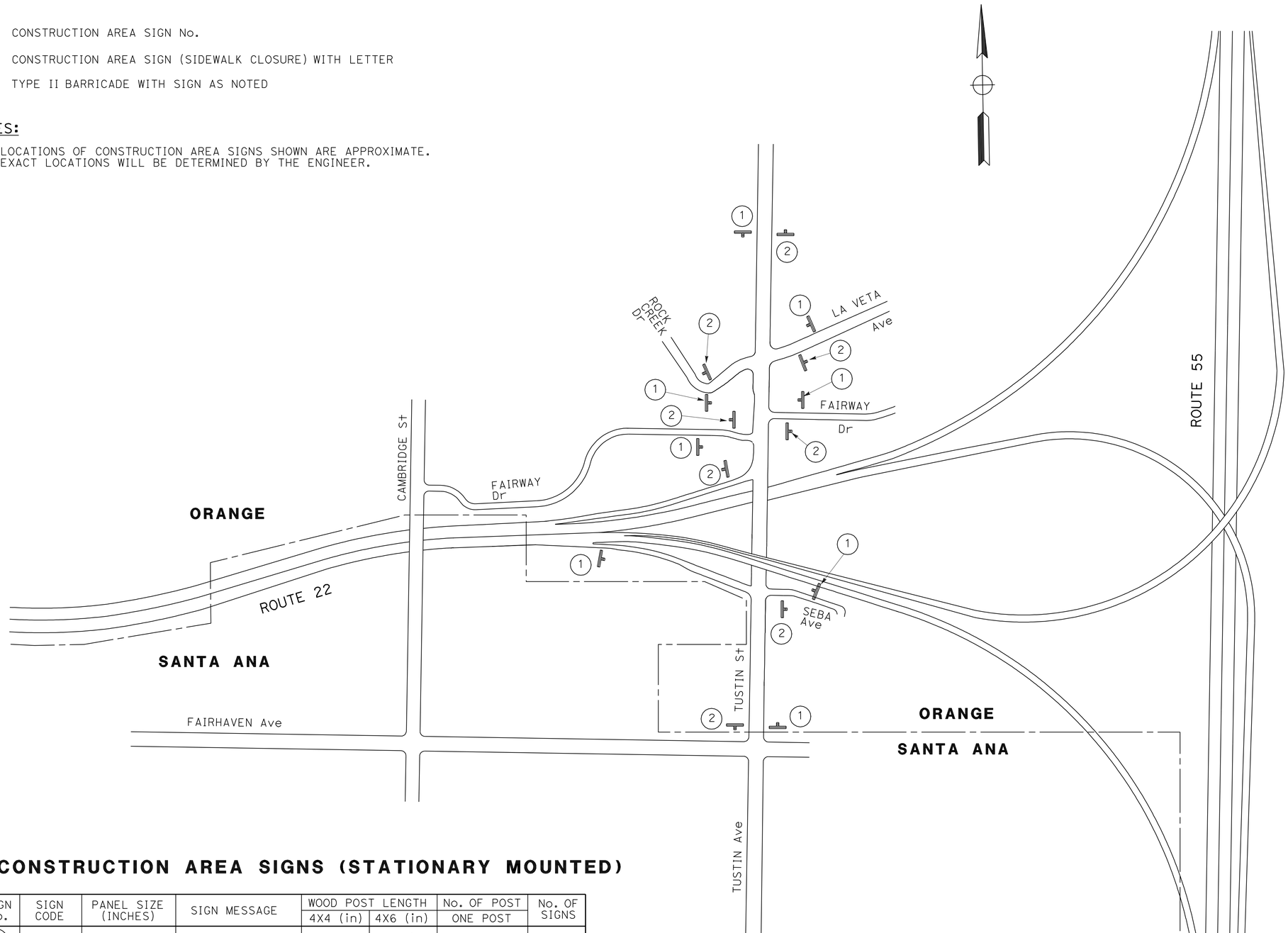

CONSTRUCTION AREA SIGNS (STATIONARY MOUNTED)

SIGN No.	SIGN CODE	PANEL SIZE (INCHES)	SIGN MESSAGE	WOOD POST LENGTH 4X4 (in)	WOOD POST LENGTH 4X6 (in)	No. OF POST ONE POST	No. OF SIGNS
1	W20-1	36 X 36	ROAD WORK AHEAD		16′	X	8
2	G20-2	36 X 18	END ROAD WORK	12′		X	8

FOR ADDITIONAL QUANTITIES OF CONSTRUCTION AREA SIGNS, SEE Sht CS-2.

CONSTRUCTION AREA SIGNS

NO SCALE

THIS PLAN ACCURATE FOR CONSTRUCTION AREA SIGN WORK ONLY

CS-1

REVISED BY | DATE REVISED
ROSALVA NAVARRO | ARMANDO SOLIS
CALCULATED-DESIGNED BY | CHECKED BY
MARK ESPOSITO
CONSULTANT FUNCTIONAL SUPERVISOR
STATE OF CALIFORNIA - DEPARTMENT OF TRANSPORTATION
Caltrans
08-MAR-2010 12:45
trmikesl
H:\pdata\10106777\CADD\TransPW\Cad_Out\FINAL\DGN\c0K5801a001.dgn

LAST REVISION 01-25-10 | DATE PLOTTED => 08-MAR-2010 | TIME PLOTTED => 12:45

Dist	COUNTY	ROUTE	POST MILES TOTAL PROJECT	SHEET No.	TOTAL SHEETS
12	Ora	22	12.6	10	34

REGISTERED CIVIL ENGINEER 1/26/10 DATE

3-8-10
PLANS APPROVAL DATE

REGISTERED PROFESSIONAL ENGINEER ARMANDO SOLIS No. 72012 Exp 9/30/10 CIVIL STATE OF CALIFORNIA

THE STATE OF CALIFORNIA OR ITS OFFICERS OR AGENTS SHALL NOT BE RESPONSIBLE FOR THE ACCURACY OR COMPLETENESS OF SCANNED COPIES OF THIS PLAN SHEET.

RBF CONSULTING
14725 ALTON PKWY
IRVINE, CA. 92618-2027

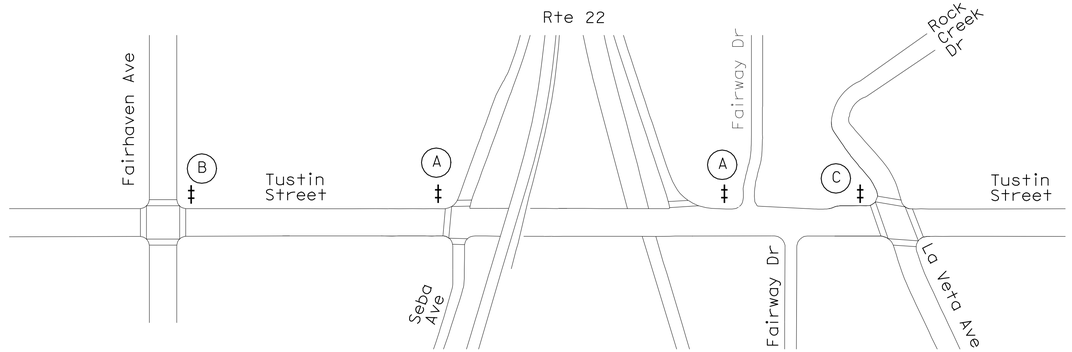

SIDEWALK CLOSURE PLAN
(SOUTHBOUND TUSTIN STREET SIDEWALK CLOSURE)

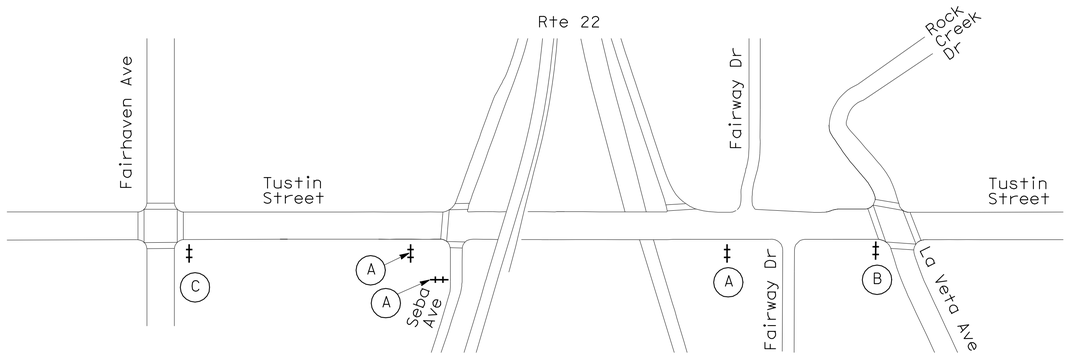

SIDEWALK CLOSURE PLAN
(NORTHBOUND TUSTIN STREET SIDEWALK CLOSURE)

CONSTRUCTION AREA SIGNS (BARRICADE MOUNTED)

SIGN No.	SIGN CODE	PANEL SIZE (INCHES)	SIGN MESSAGE	No. OF SIGNS
A	R9-9	24 X 12	SIDEWALK CLOSED	5
B	R9-11(Rt)	24 X 12	SIDEWALK CLOSED AHEAD, (Rt ARROW) CROSS HERE	2
C	R9-11(Lt)	24 X 12	SIDEWALK CLOSED AHEAD, (Lt ARROW) CROSS HERE	2

FOR ADDITIONAL QUANTITIES OF CONSTRUCTION AREA SIGNS, SEE Sht CS-1.

TYPE II BARRICADE

DESCRIPTION & LOCATION		TYPE II BARRICADE
SHEET	LOCATION	EA
CS-2	SOUTHBOUND TUSTIN St SIDEWALK, Lt "T"	4
CS-2	NORTHBOUND TUSTIN St SIDEWALK, Rt "T"	5
TOTAL		9

THIS PLAN ACCURATE FOR CONSTRUCTION AREA SIGN WORK ONLY

CONSTRUCTION AREA SIGNS
(SIDEWALK CLOSURE)

NO SCALE

CS-2

STATE OF CALIFORNIA - DEPARTMENT OF TRANSPORTATION
Caltrans
CONSULTANT FUNCTIONAL SUPERVISOR: MARK ESPOSITO
CALCULATED-DESIGNED BY: ROSALVA NAVARRO
CHECKED BY: ARMANDO SOLIS
REVISED BY
DATE REVISED
H:\pdata\10106777\CADD\TransPW\Cad_Out\FINAL\DGN\c0K5801a002.dgn trmikesl 08-MAR-2010 12:45

LAST REVISION 01-05-10
DATE PLOTTED => 08-MAR-2010
TIME PLOTTED => 12:45

Dist	COUNTY	ROUTE	POST MILES TOTAL PROJECT	SHEET No.	TOTAL SHEETS
12	Ora	22	12.6	11	34

REGISTERED CIVIL ENGINEER 1/26/10 DATE

3-8-10
PLANS APPROVAL DATE

REGISTERED PROFESSIONAL ENGINEER ARMANDO SOLIS No. 72012 Exp 9/30/10 CIVIL STATE OF CALIFORNIA

THE STATE OF CALIFORNIA OR ITS OFFICERS OR AGENTS SHALL NOT BE RESPONSIBLE FOR THE ACCURACY OR COMPLETENESS OF SCANNED COPIES OF THIS PLAN SHEET.

RBF CONSULTING
14725 ALTON PKWY
IRVINE, CA. 92618-2027

LEGEND:

- (#) PAVEMENT DELINEATION DETAIL NUMBER
- (PM) PAVEMENT MARKING AS SHOWN
- (RP) REMOVE TRAFFIC STRIPE OR PAVEMENT MARKING AS SHOWN
- [E] EXISTING TO REMAIN
- CHANGE OF PAVEMENT DELINEATION DETAIL
- • DELINEATOR (CLASS 1)
- X′ WIDTH
- (X′) EXISTING WIDTH

NOTES:

1. FOR ACCURATE RIGHT OF WAY AND ACCESS DATA, CONTACT RIGHT OF WAY ENGINEERING AT THE DISTRICT OFFICE.
2. REMOVE ALL CONFLICTING TRAFFIC STRIPES, PAVEMENT MARKINGS AND PAVEMENT MARKERS.
3. ALL TRAFFIC STRIPES AND PAVEMENT MARKINGS ARE THERMOPLASTIC UNLESS OTHERWISE NOTED.
4. PLACE ARROWS 20 FEET BEFORE LIMIT LINE OR CROSSWALK.
5. ALL CROSSWALKS SHALL HAVE A 10 FEET INSIDE WIDTH.
6. EXACT LOCATION OF PAVEMENT MARKINGS TO BE DETERMINED BY THE ENGINEER.
7. DIMENSIONS ALONG CURB AND GUTTER ARE GIVEN TO FACE OF CURB.

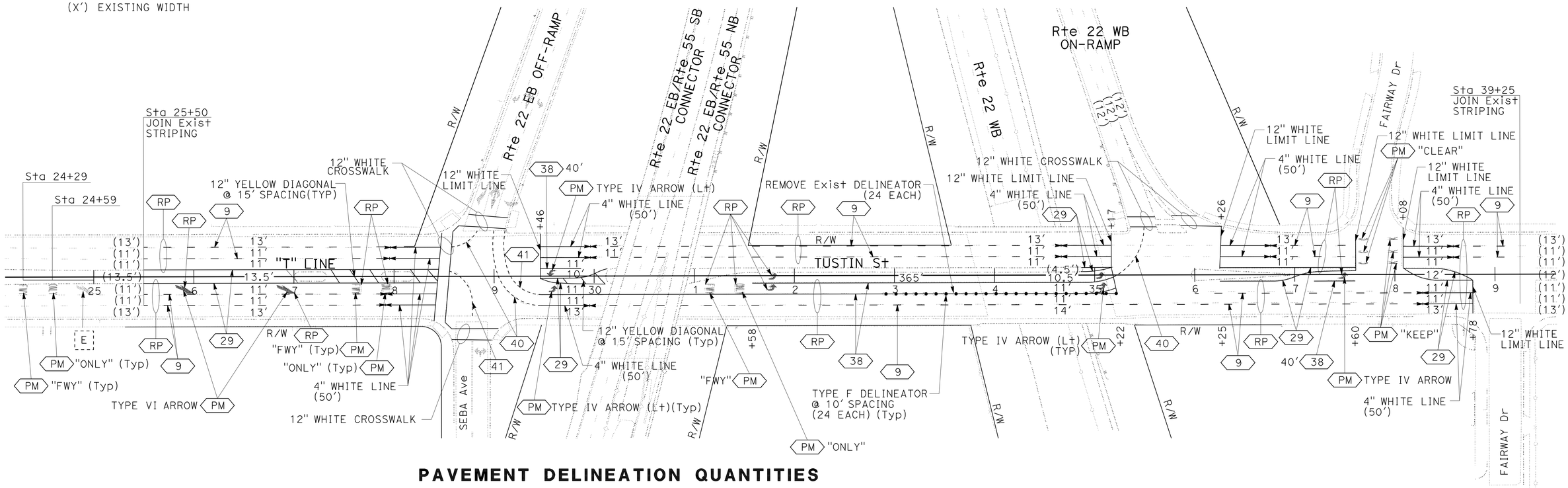

PAVEMENT DELINEATION QUANTITIES

SHEET No.	STATION LIMITS	DIRECTION	THERMOPLASTIC TRAFFIC STRIPE 4" SOLID YELLOW DETAIL 29	4" SOLID WHITE LINE	4" BROKEN WHITE (6 - 1) DETAIL 40	4" BROKEN YELLOW (6 - 1) DETAIL 41	4" BROKEN WHITE (17 - 7) DETAIL 9	8" SOLID WHITE LINE, DETAIL 38	THERMOPLASTIC PAVEMENT MARKING LIMIT LINE/CROSSWALK (WHITE)	DIAGONAL (YELLOW)	ARROW/SYMBOL (WHITE)	PAVEMENT MARKER RETROREFLECTIVE TYPE D	TYPE G	DELINEATOR (CLASS 1) TYPE F	REMOVE THERMOPLASTIC YELLOW TRAFFIC STRIPE (HAZARDOUS WASTE)	TRAFFIC STRIPE	PAVEMENT MARKING	PAVEMENT MARKER	DELINEATOR
			LF	LF	LF	LF	LF	LF	SQFT	SQFT	SQFT	EA	EA	EA	LF	LF	SQFT	EA	EA
PD-1	"T" 24+29 TO 24+59	NB									38								
PD-1	"T" 25+50 TO 39+25	NB & SB	2400	750	196	140	3278	1030	682	110	442	100	111	24	2455	5254	1234	211	24
TOTAL			3150		335		3278	1030	1278			211		24	2455	5254	1234	211	24

PAVEMENT DELINEATION PLAN

SCALE: 1" = 50′

PD-1

THIS PLAN ACCURATE FOR PAVEMENT DELINEATION WORK ONLY

STATE OF CALIFORNIA - DEPARTMENT OF TRANSPORTATION
Caltrans

CONSULTANT FUNCTIONAL SUPERVISOR: MARK ESPOSITO
CALCULATED-DESIGNED BY: ROSALVA NAVARRO
CHECKED BY: ARMANDO SOLIS
REVISED BY / DATE REVISED

08-MAR-2010 12:46
trmikesl
H:\pdata\10106777\CADD\TransPW\Cad_Out\FINAL\DGN\c0K580na001.dgn

LAST REVISION 01-27-10
DATE PLOTTED => 08-MAR-2010
TIME PLOTTED => 12:46

Dist	COUNTY	ROUTE	POST MILES TOTAL PROJECT	SHEET No.	TOTAL SHEETS
12	Ora	22	12.6	12	34

REGISTERED CIVIL ENGINEER 1/26/10 DATE

3-8-10
PLANS APPROVAL DATE

REGISTERED PROFESSIONAL ENGINEER STEFAN HOFFMEISTER No. 70129 Exp 9/30/10 CIVIL STATE OF CALIFORNIA

THE STATE OF CALIFORNIA OR ITS OFFICERS OR AGENTS SHALL NOT BE RESPONSIBLE FOR THE ACCURACY OR COMPLETENESS OF SCANNED COPIES OF THIS PLAN SHEET.

RBF CONSULTING
14725 ALTON PKWY
IRVINE, CA. 92618-2027

MINOR CONCRETE (MISCELLANEOUS CONSTRUCTION)

DESCRIPTION & LOCATION			MINOR Conc (Misc Const)		
			CURB RAMP (CASE C)	CURB RAMP (CASE C Mod)	Conc SIDEWALK
SHEET	STATION	LOCATION	CY	CY	CY
L-1 & C-1	28+32.23 TO 28+59.73	Rt "T"	1.7		1.7
L-1 & C-1	29+04.38 TO 29+25.03	Rt "T"		1.2	1.1
SUB TOTAL			1.7	1.2	2.8
TOTAL			5.7		

TEMPORARY DRAINAGE INLET PROTECTION

DESCRIPTION & LOCATION			TEMPORARY DRAINAGE INLET PROTECTION
SHEET	STATION	LOCATION	EA
L-1	20+10	Rt "T"	1
TOTAL			1

REMOVE CONCRETE

DESCRIPTION & LOCATION			REMOVE Conc	
			SIDEWALK	CURB RAMP
SHEET	STATION	LOCATION	CY	CY
L-1 & C-1	28+32.23 TO 28+59.73	Rt "T"	2.7	0.8
L-1 & C-1	29+06.92 TO 29+25.03	Rt "T"	1.6	1.1
SUB TOTAL			4.3	1.9
TOTAL			6.2	

SUMMARY OF QUANTITIES

Q-1

H:\pdata\10106777\CADD\TransPW\Cad_Out\FINAL\DGN\c0K580pa001.dgn 08-MAR-2010 12:46 trmikesl

STATE OF CALIFORNIA - DEPARTMENT OF TRANSPORTATION Caltrans

CONSULTANT FUNCTIONAL SUPERVISOR	MIKE CHESNEY	REVISED BY	
CALCULATED-DESIGNED BY	STEFAN HOFFMEISTER	DATE REVISED	
CHECKED BY	RANDY RATZLAFF		

LAST REVISION 01-25-10 | DATE PLOTTED => 08-MAR-2010 | TIME PLOTTED => 12:46

Dist	COUNTY	ROUTE	POST MILES TOTAL PROJECT	SHEET No.	TOTAL SHEETS
12	Ora	22	12.6	13	34

REGISTERED CIVIL ENGINEER 1/26/10 DATE

3-8-10
PLANS APPROVAL DATE

REGISTERED PROFESSIONAL ENGINEER ARMANDO SOLIS No. 72012 Exp 9/30/10 CIVIL STATE OF CALIFORNIA

THE STATE OF CALIFORNIA OR ITS OFFICERS OR AGENTS SHALL NOT BE RESPONSIBLE FOR THE ACCURACY OR COMPLETENESS OF SCANNED COPIES OF THIS PLAN SHEET.

RBF CONSULTING
14725 ALTON PKWY
IRVINE, CA. 92618-2027

LEGEND:

- X-X — SHEET No. — SIGN No. — ROADSIDE SIGN (WITH NUMBER)
- ROADSIDE SIGN, 1 POST
- ROADSIDE SIGN, 2 POST
- ROADSIDE SIGN (STRAP AND SADDLE BRACKET METHOD)
- EXISTING ROADSIDE SIGN, 1 POST
- EXISTING ROADSIDE SIGN, 2 POST
- EXISTING ROADSIDE SIGN ON POST
- E — EXISTING TO REMAIN

ABBREVIATIONS:

IS	INSTALL ROADSIDE SIGN
ISB	INSTALL SIGN (STRAP AND SADDLE BRACKET METHOD)
SM	INSTALL SIGN (MAST ARM MOUNTED), SEE ELECTRICAL PLANS
SP	INSTALL SIGN (PEDESTRIAN BARRICADE), SEE ELECTRICAL PLANS
RM	REMOVE ROADSIDE SIGN
(CA)	SIGN(S) PER 2006 CALIFORNIA MUTCD

NOTES:

1. FOR ACCURATE RIGHT OF WAY AND ACCESS DATA, CONTACT RIGHT OF WAY ENGINEERING AT THE DISTRICT OFFICE.
2. SIGN LOCATIONS SHOWN ARE APPROXIMATE. EXACT LOCATION OF ROADSIDE SIGNS WILL BE DETERMINED BY THE ENGINEER.

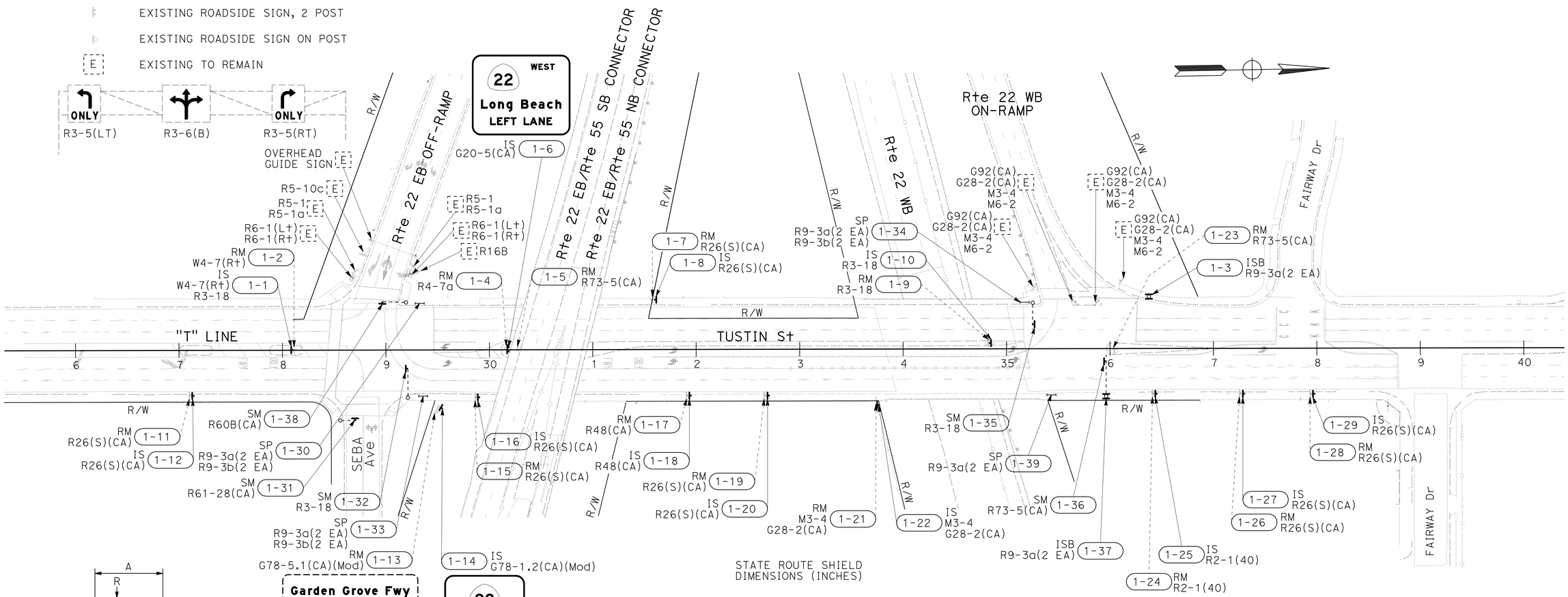

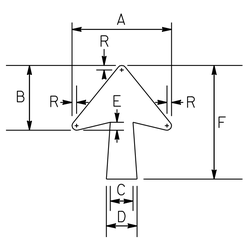

HORIZONTAL ARROW DETAIL DIMENSION (INCHES)

A	B	C	D	E	F	R
8 7/16	5 7/16	2 5/16	2 15/16	5/8	9 9/16	1/2

STATE ROUTE SHIELD DIMENSIONS (INCHES)

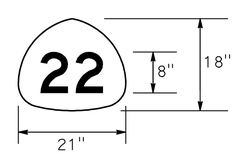

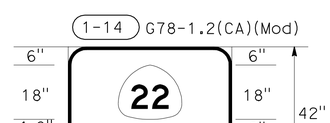

6" Radius, 1" Border, White on Green:
State Route Shield 21" X 18";
Standard Horizontal Arrow Custom 8 7/16" X 9 9/16";
[WEST] 8" UC SERIES E(Mod)

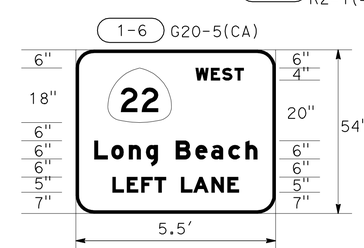

6" Radius, 1" Border, White on Green;
State Route Shield 21" X 18";
[WEST] 4" UC, SERIES E(Mod);
[Long Beach] 6" UC, 4 1/2" LC SERIES E(Mod);
[LEFT LANE] 5" UC SERIES E(Mod)

SIGN PLAN

SCALE: 1" = 50'

THIS PLAN ACCURATE FOR SIGN WORK ONLY

S-1

REVISED BY | DATE REVISED
ROSALVA NAVARRO | ARMANDO SOLIS
CALCULATED-DESIGNED BY | CHECKED BY
MARK ESPOSITO
CONSULTANT FUNCTIONAL SUPERVISOR
STATE OF CALIFORNIA - DEPARTMENT OF TRANSPORTATION
Caltrans
H:\pdata\10106777\CADD\TransPW\Cad_Out\FINAL\DGN\c0K580aa001.dgn
08-MAR-2010 12:46
trmikesl

LAST REVISION 01-25-10 | DATE PLOTTED => 08-MAR-2010 | TIME PLOTTED => 12:46

Dist	COUNTY	ROUTE	POST MILES TOTAL PROJECT	SHEET No.	TOTAL SHEETS
12	Ora	22	12.6	14	34

REGISTERED CIVIL ENGINEER 1/26/10 DATE

3-8-10
PLANS APPROVAL DATE

REGISTERED PROFESSIONAL ENGINEER ARMANDO SOLIS No. 72012 Exp 9/30/10 CIVIL STATE OF CALIFORNIA

THE STATE OF CALIFORNIA OR ITS OFFICERS OR AGENTS SHALL NOT BE RESPONSIBLE FOR THE ACCURACY OR COMPLETENESS OF SCANNED COPIES OF THIS PLAN SHEET.

RBF CONSULTING
14725 ALTON PKWY
IRVINE, CA. 92618-2027

CONTRACTOR-FURNISHED SIGNS

MATERIAL SUMMARY

SIGN No.	SIGN CODE	SIGN SIZE L x D (in x in)	SINGLE FACED	DOUBLE FACED	BACKGROUND SHEETING COLOR	BACKGROUND RETROFLECTIVE ASTM TYPE	LEGEND SHEETING COLOR	LEGEND RETROFLECTIVE ASTM TYPE	GRAFFITI FILM STANDARD	GRAFFITI FILM PREMIUM	FURNISH SINGLE SHEET FRAMED ALUMINUM 0.063" SQFT	FURNISH SINGLE SHEET UNFRAMED ALUMINUM 0.063" SQFT	FURNISH SINGLE SHEET UNFRAMED ALUMINUM 0.080" SQFT
1-1	W4-7(R+)	30X30	X		YELLOW	III	BLACK	Non		X		6.25	
	R3-18	24X24	X		WHITE	III	RED & BLACK	III	X			4.00	
1-3	R9-3a (2 EA)	18X18	X		WHITE	III	RED & BLACK	III	X			4.50	
1-6	G20-5(CA)	66X54	X		GREEN	IV	WHITE	IV		X	24.75		
1-8	R26(S)(CA)	12X18	X		WHITE	IV	RED	IV	X			1.50	
1-10	R3-18	24X24	X		WHITE	III	RED & BLACK	III	X			4.00	
1-12	R26(S)(CA)	12X18	X		WHITE	IV	RED	IV	X			1.50	
1-14	G78-1.2(CA)(Mod)	54X42	X		GREEN	IV	WHITE	IV		X			15.75
1-16	R26(S)(CA)	12X18	X		WHITE	IV	RED	IV	X			1.50	
1-18	R48(CA)	24X30	X		WHITE	III	BLACK	Non	X			5.00	
1-20	R26(S)(CA)	12X18	X		WHITE	IV	RED	IV	X			1.50	
1-22	M3-4	24X12	X		WHITE	III	BLACK	Non	X			2.00	
	G28-2(CA)	30X31.25	X		GREEN	IV	WHITE	IV		X		6.51	
1-25	R2-1(40)	24X30	X		WHITE	III	BLACK	Non	X			5.00	
1-27	R26(S)(CA)	12X18	X		WHITE	IV	RED	IV	X			1.50	
1-29	R26(S)(CA)	12X18	X		WHITE	IV	RED	IV	X			1.50	
1-30	R9-3a (2 EA)	18X18	X		WHITE	III	RED & BLACK	III	X			4.50	
	R9-3b (2 EA)	18X12	X		WHITE	III	BLACK	Non	X			3.00	
1-31	R61-28(CA)	48X30	X		WHITE	III	BLACK	Non	X				10.00
1-32	R3-18	24X24	X		WHITE	III	RED & BLACK	III	X			4.00	
1-33	R9-3a (2 EA)	18X18	X		WHITE	III	RED & BLACK	III	X			4.50	
	R9-3b (2 EA)	18X12	X		WHITE	III	BLACK	Non	X			3.00	
1-34	R9-3a (2 EA)	18X18	X		WHITE	III	RED & BLACK	III	X			4.50	
	R9-3b (2 EA)	18X12	X		WHITE	III	BLACK	Non	X			3.00	
1-35	R3-18	24X24	X		WHITE	III	RED & BLACK	III	X			4.00	
1-36	R73-5(CA)	36X36	X		WHITE	III	BLACK	Non	X			9.00	
1-37	R9-3a (2 EA)	18X18	X		WHITE	III	RED & BLACK	III	X			4.50	
1-38	R60B(CA)	45X36	X		WHITE	III	BLACK	Non	X			11.25	
1-39	R9-3a (2 EA)	18X18	X		WHITE	III	RED & BLACK	III	X			4.50	
										TOTAL	24.75	106.01	25.75

L = LENGTH
D = DEPTH

SIGN QUANTITIES

SQ-2

REVISED BY | DATE REVISED
ROSALVA NAVARRO | ARMANDO SOLIS
CALCULATED-DESIGNED BY | CHECKED BY
CONSULTANT FUNCTIONAL SUPERVISOR: MARK ESPOSITO
STATE OF CALIFORNIA - DEPARTMENT OF TRANSPORTATION
Caltrans

H:\pdata\10106777\CADD\TransPW\Cad_Out\FINAL\DGN\c0K580oc002.dgn 08-MAR-2010 12:46 trmikesl

LAST REVISION 01-05-10 | DATE PLOTTED => 08-MAR-2010 | TIME PLOTTED => 12:46

Dist	COUNTY	ROUTE	POST MILES TOTAL PROJECT	SHEET No.	TOTAL SHEETS
12	Ora	22	12.6	15	34

REGISTERED CIVIL ENGINEER 1/26/10 DATE

3-8-10
PLANS APPROVAL DATE

REGISTERED PROFESSIONAL ENGINEER ARMANDO SOLIS No. 72012 Exp 9/30/10 CIVIL STATE OF CALIFORNIA

THE STATE OF CALIFORNIA OR ITS OFFICERS OR AGENTS SHALL NOT BE RESPONSIBLE FOR THE ACCURACY OR COMPLETENESS OF SCANNED COPIES OF THIS PLAN SHEET.

RBF CONSULTING
14725 ALTON PKWY
IRVINE, CA. 92618-2027

ROADSIDE SIGNS

SHEET No.	SIGN No.	SIGN CODE	PANEL SIZE in	POST SIZE & LENGTH 4 X 4 (in)	POST SIZE & LENGTH 4 X 6 (in)	ROADSIDE SIGN ONE POST	ROADSIDE SIGN TWO POST	INSTALL SIGN (STRAP & SADDLE METHOD)	INSTALL SIGN (MAST-ARM MOUNTED) (N)	INSTALL SIGN (PEDESTRIAN BARRICADE) (N)	REMOVE ROADSIDE SIGN	REMARKS
				LF	LF	EA	EA	EA	EA	EA	EA	
S-1	1-1	W4-7(R+)	30X30		16	1						
		R3-18	24X24									
S-1	1-2	W4-7(R+)									1	
S-1	1-3	R9-3a	18X18					2				
S-1	1-4	R4-7a									1	
S-1	1-5	R73-5(CA)									1	
S-1	1-6	G20-5(CA)	66X54	15			1					
S-1	1-7	R26(S)(CA)									1	
S-1	1-8	R26(S)(CA)	12X18	12		1						
S-1	1-9	R3-18									1	
S-1	1-10	R3-18	24X24	13		1						
S-1	1-11	R26(S)(CA)									1	
S-1	1-12	R26(S)(CA)	12X18	12		1						
S-1	1-13	G78-5.1(CA)(Mod)									1	
S-1	1-14	G78-1.2(CA)(Mod)	54X42		15	1						
S-1	1-15	R26(S)(CA)									1	
S-1	1-16	R26(S)(CA)	12X18	12		1						
S-1	1-17	R48(CA)									1	
S-1	1-18	R48(CA)	24X30	13		1						
S-1	1-19	R26(S)(CA)									1	
S-1	1-20	R26(S)(CA)	12X18	12		1						
S-1	1-21	M3-4									1	
		G28-2(CA)										
S-1	1-22	M3-4	24X12		14	1						
		G28-2(CA)	30X31.25									
S-1	1-23	R73-5(CA)									1	
S-1	1-24	R2-1(40)									1	
S-1	1-25	R2-1(40)	24X30	13		1						
S-1	1-26	R26(S)(CA)									1	
S-1	1-27	R26(S)(CA)	12X18	12		1						
S-1	1-28	R26(S)(CA)									1	
S-1	1-29	R26(S)(CA)	12X18	12		1						
S-1	1-30	R9-3a	18X18							2		SEE ELECTRICAL PLANS
		R9-3b	18X12							2		SEE ELECTRICAL PLANS
S-1	1-31	R61-28(CA)	48X30						1			SEE ELECTRICAL PLANS
S-1	1-32	R3-18	24X24						1			SEE ELECTRICAL PLANS
S-1	1-33	R9-3a	18X18							2		SEE ELECTRICAL PLANS
		R9-3b	18X12							2		SEE ELECTRICAL PLANS
S-1	1-34	R9-3a	18X18							2		SEE ELECTRICAL PLANS
		R9-3b	18X12							2		SEE ELECTRICAL PLANS
S-1	1-35	R3-18	24X24						1			SEE ELECTRICAL PLANS
S-1	1-36	R73-5(CA)	24X24						1			SEE ELECTRICAL PLANS
S-1	1-37	R9-3a	18X18					2				
S-1	1-38	R60B(CA)	45X36						1			SEE ELECTRICAL PLANS
S-1	1-39	R9-3a	18X18							2		SEE ELECTRICAL PLANS
TOTAL						12	1	4			15	

(N) - NOT A SEPARATE PAY ITEM, FOR INFORMATION ONLY

SIGN QUANTITIES

SQ-1

REVISED BY | DATE REVISED

ROSALVA NAVARRO | ARMANDO SOLIS

CALCULATED-DESIGNED BY | CHECKED BY

CONSULTANT FUNCTIONAL SUPERVISOR: MARK ESPOSITO

STATE OF CALIFORNIA - DEPARTMENT OF TRANSPORTATION

Caltrans

H:\pdata\10106777\CADD\TransPW\Cad_Out\FINAL\DGN\c0K580oc001.dgn trmikesl 08-MAR-2010 12:46

LAST REVISION 01-25-10 | DATE PLOTTED => 08-MAR-2010 | TIME PLOTTED => 12:46

Dist	COUNTY	ROUTE	POST MILES TOTAL PROJECT	SHEET No.	TOTAL SHEETS
12	Ora	22	12.6	16	34

REGISTERED CIVIL ENGINEER 1/26/10 DATE

3-8-10
PLANS APPROVAL DATE

REGISTERED PROFESSIONAL ENGINEER ARMANDO SOLIS No. 72012 Exp. 9/30/10 CIVIL STATE OF CALIFORNIA

THE STATE OF CALIFORNIA OR ITS OFFICERS OR AGENTS SHALL NOT BE RESPONSIBLE FOR THE ACCURACY OR COMPLETENESS OF SCANNED COPIES OF THIS PLAN SHEET.

RBF CONSULTING
14725 ALTON PKWY
IRVINE, CA. 92618-2027

NOTE (THIS SHEET ONLY):

FOR ACCURATE RIGHT OF WAY DATA, CONTACT RIGHT OF WAY ENGINEERING AT THE DISTRICT OFFICE.

ABBREVIATIONS:

SMFO SINGLEMODE FIBER OPTIC

LEGEND:

V EXISTING SPLICE VAULT

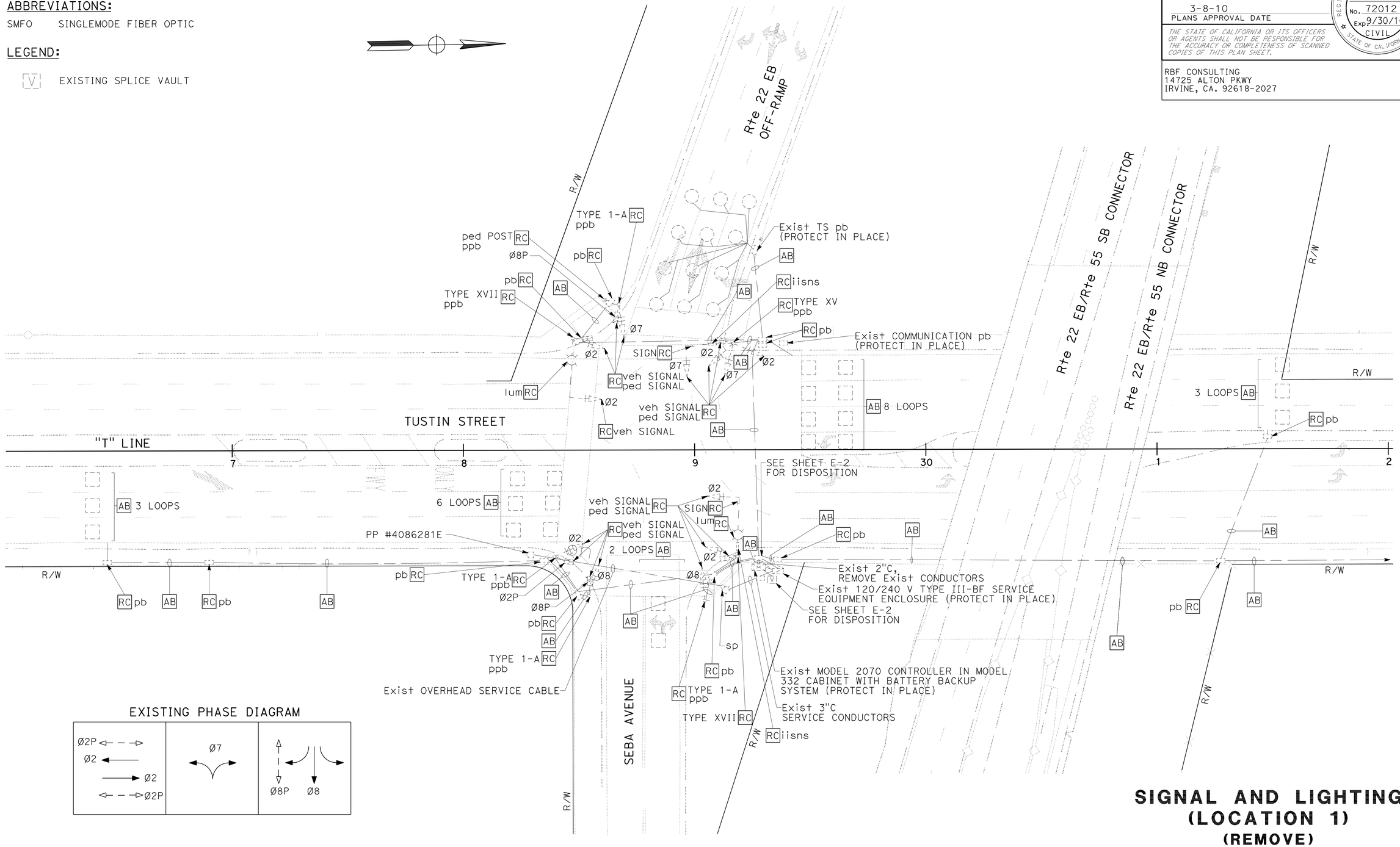

SIGNAL AND LIGHTING (LOCATION 1) (REMOVE)

SCALE: 1" = 20'

E-1

THIS PLAN IS ACCURATE FOR ELECTRICAL WORK ONLY.

STATE OF CALIFORNIA - DEPARTMENT OF TRANSPORTATION
Caltrans
CONSULTANT FUNCTIONAL SUPERVISOR: MARK ESPOSITO
CALCULATED-DESIGNED BY: ROSALVA NAVARRO
CHECKED BY: ARMANDO SOLIS
REVISED BY
DATE REVISED
08-MAR-2010 12:46
trmikesl
H:\pdata\10106777\CADD\TransPW\Cad_Out\FINAL\DGN\c0K580ua001.dgn

LAST REVISION 01-25-10
DATE PLOTTED => 08-MAR-2010
TIME PLOTTED => 12:46

Dist	COUNTY	ROUTE	POST MILES TOTAL PROJECT	SHEET No.	TOTAL SHEETS
12	Ora	22	12.6	17	34

REGISTERED CIVIL ENGINEER 1/26/10 DATE

3-8-10
PLANS APPROVAL DATE

REGISTERED PROFESSIONAL ENGINEER ARMANDO SOLIS No. 72012 Exp. 9/30/10 CIVIL STATE OF CALIFORNIA

THE STATE OF CALIFORNIA OR ITS OFFICERS OR AGENTS SHALL NOT BE RESPONSIBLE FOR THE ACCURACY OR COMPLETENESS OF SCANNED COPIES OF THIS PLAN SHEET.

RBF CONSULTING
14725 ALTON PKWY
IRVINE, CA. 92618-2027

NOTES: (THIS SHEET ONLY):

FOR ACCURATE RIGHT OF WAY DATA, CONTACT RIGHT OF WAY ENGINEERING AT THE DISTRICT OFFICE.

1. REMOVE EXISTING CONTROLLER CABINET FOUNDATION AND INSTALL NEW FOUNDATION IN PLACE. RE-INSTALL EXISTING MODEL 2070 CONTROLLER IN MODEL 332 CABINET WITH BATTERY BACKUP SYSTEM ON NEW FOUNDATION.
2. EXISTING 120/240 V TYPE III-BF METERED SERVICE EQUIPMENT ENCLOSURE. PROTECT IN PLACE.
3. INSTALL SIGN AS NOTED PER STATE STANDARD PLAN ES-7N, DETAIL "U". SEE SHEET SQ-2 FOR SIGN QUANTITIES.
4. INSTALL PEDESTRIAN BARRICADE TYPE I WITH SIGNS AS NOTED. SEE SHEET SQ-2 FOR SIGN QUANTITIES.
5. REPLACE EXISTING PULL BOX WITH NEW PULL BOX.
6. PULL BACK EXISTING 12-SMFO CABLE FROM EXISTING CONTROLLER TO EXISTING COMMUNICATIONS SPLICE VAULT. REPULL 12-SMFO CABLE INTO RE-INSTALLED CONTROLLER CABINET AND TERMINATE IN EXISTING FDU.

CONDUCTOR AND CONDUIT SCHEDULE

CONDUCTORS DESIGNATION				NUMBER OF CONDUCTORS						
				RUN NUMBER						
CABLE TYPE	POLE	PHASE		1	2	3	4	5	6	7
VEH-PED 12CSC / PPB 3CSC	A	4,4P	2PPB	– / –	– / –	– / –	– / –	1 / 1	1 / 1	1 / 1
	B	6,2P	4PPB	– / –	– / –	– / –	1 / 1	1 / 1	1 / 1	1 / 1
	C	2	–	– / –	– / –	– / –	1 / –	1 / –	1 / –	1 / –
	D	6,6P	4PPB	1 / 1	1 / 1	1 / 1	– / –	– / –	– / –	1 / 1
	E	3,4,4P	6PPB	– / –	1 / 1	1 / 1	– / –	– / –	– / –	1 / 1
	F	3,6,6P	6PPB	– / –	– / –	1 / 1	– / –	– / –	– / –	1 / 1
	G	2,2P	–	– / –	– / –	– / –	– / –	– / –	– / –	1 / –
	H	3,4	2PPB	– / –	– / –	– / –	– / –	– / –	1 / 1	1 / 1
TOTAL CABLES				1 / 1	2 / 2	3 / 3	2 / 1	3 / 2	4 / 3	8 / 6
No. 10	IISNS			2	2	2	–	2	2	–
	STREET LIGHTING			2	2	2	–	2	2	–
TOTAL No. 10 CONDUCTORS				4	4	4	–	4	4	–
TYPE C DLC	Ø2			–	–	–	5	5	5	5
	Ø3			–	–	–	–	–	1	1
	Ø4			–	–	3	–	–	–	3
	Ø6			–	–	6	–	–	–	6
TOTAL DLC PER RUN				–	–	9	5	5	6	15
SIC (12 PAIR No. 19)				–	–	–	–	–	–	1
CONDUIT SIZE				2"	3"	4"	3"	3½"	4"	2-4"

POLE AND EQUIPMENT SCHEDULE

No.	STANDARD			VEH SIG MTG		PED SIG MTG	PPB		HPS LUM	IISNS
	TYPE	SMA	LMA	MAST ARM	POLE		Ø	ARROW		
A	19-4-100	20′	15′	MAS-4B	SV-1-T	SP-1-T	2	←	200 W	Tustin
B	1-A	–	–	–	TV-1-T	SP-1-T	4	→	–	–
C	1-A	–	–	–	TV-1-T	–	–	–	–	–
D	19-4-100	30′	15′	2-MAS	SV-1-T	SP-1-T	4	←	200 W	← Seba
E	1-A	–	–	–	TV-2-T	SP-1-T	6	→	–	–
F	18-4-100	25′	–	MAS-4B	SV-2-TA	SP-1-T	6	←	–	Tustin
G	19-4-100	30′	15′	2-MAS	SV-1-T	SP-1-T	–	–	200 W	Seba →
H	1-A	–	–	–	TV-2-T	–	2	→	–	–

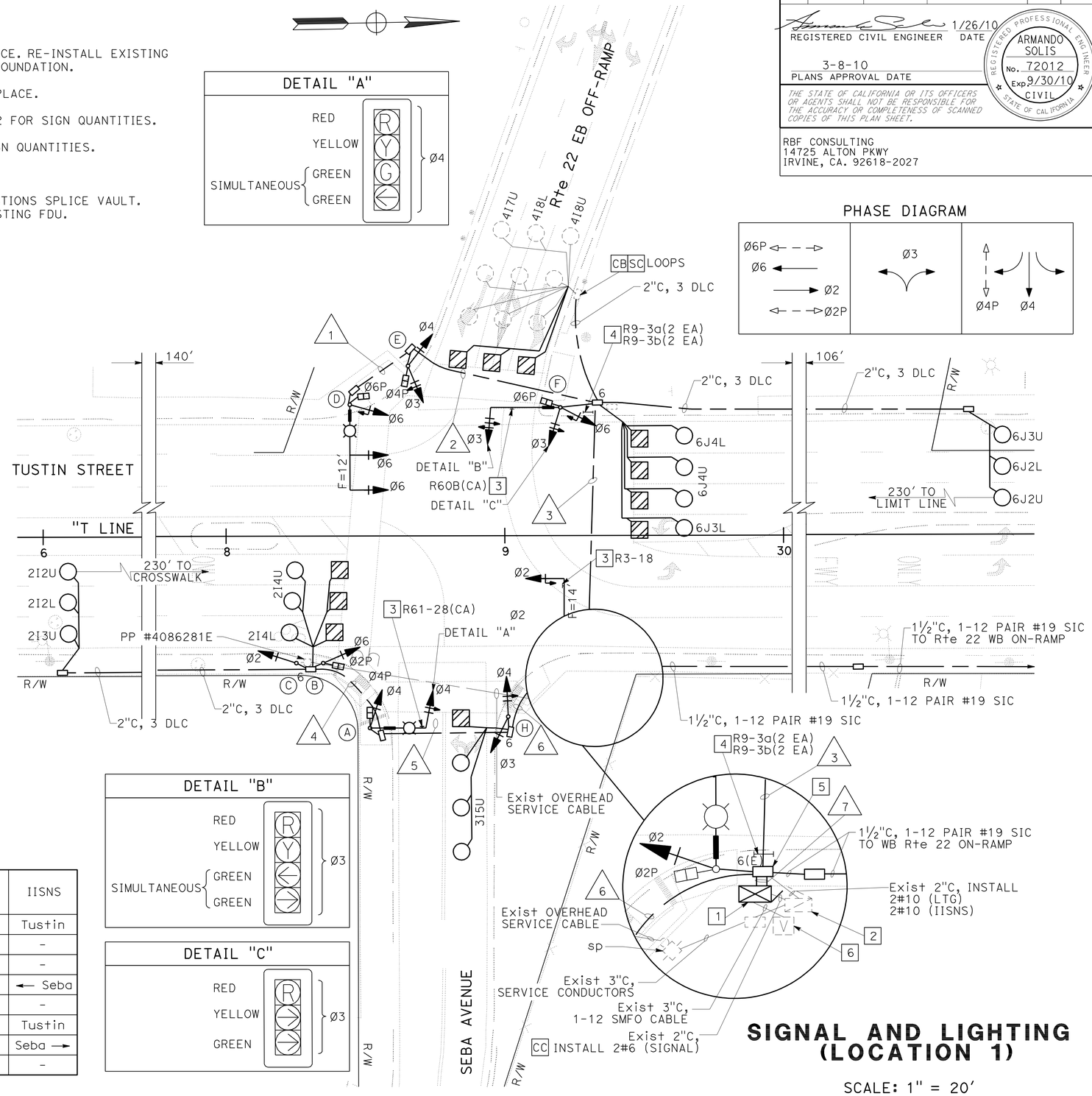

SIGNAL AND LIGHTING (LOCATION 1)

SCALE: 1" = 20′

THIS PLAN IS ACCURATE FOR ELECTRICAL WORK ONLY.

E-2

REVISED BY | DATE REVISED
ROSALVA NAVARRO | ARMANDO SOLIS
CALCULATED-DESIGNED BY | CHECKED BY
MARK ESPOSITO
CONSULTANT FUNCTIONAL SUPERVISOR
STATE OF CALIFORNIA - DEPARTMENT OF TRANSPORTATION
Caltrans
08-MAR-2010 13:43
trmikesl
H:\pdata\10106777\CADD\TransPW\Cad_Out\FINAL\DGN\c0K580ua002.dgn

LAST REVISION 01-25-10 | DATE PLOTTED => 08-MAR-2010 | TIME PLOTTED => 13:43

Dist	COUNTY	ROUTE	POST MILES TOTAL PROJECT	SHEET No.	TOTAL SHEETS
12	Ora	22	12.6	18	34

REGISTERED CIVIL ENGINEER 1/26/10 DATE

3-8-10
PLANS APPROVAL DATE

REGISTERED PROFESSIONAL ENGINEER ARMANDO SOLIS No. 72012 Exp. 9/30/10 CIVIL STATE OF CALIFORNIA

THE STATE OF CALIFORNIA OR ITS OFFICERS OR AGENTS SHALL NOT BE RESPONSIBLE FOR THE ACCURACY OR COMPLETENESS OF SCANNED COPIES OF THIS PLAN SHEET.

RBF CONSULTING
14725 ALTON PKWY
IRVINE, CA. 92618-2027

NOTE:

FOR ACCURATE RIGHT OF WAY DATA, CONTACT RIGHT OF WAY ENGINEERING AT THE DISTRICT OFFICE.

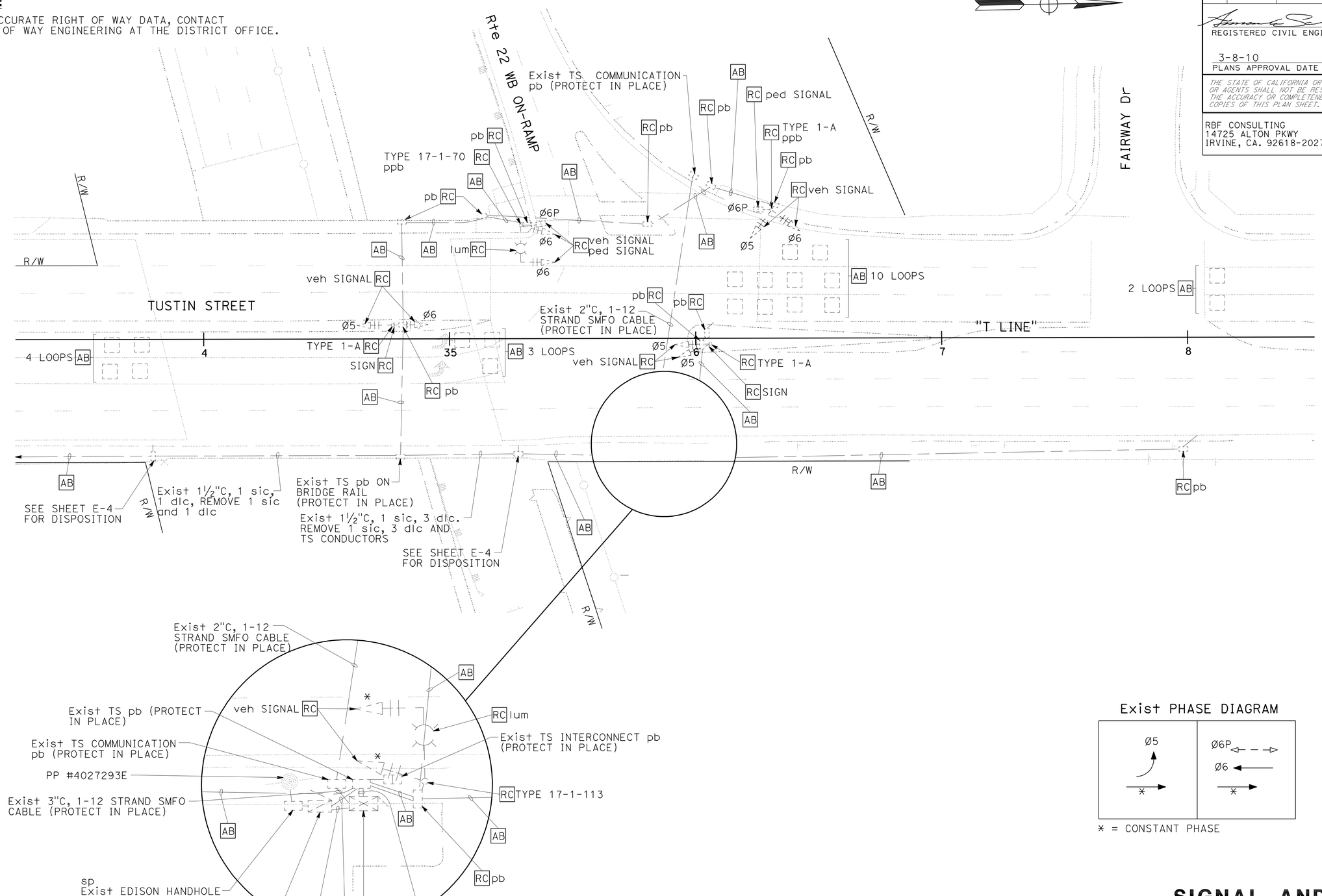

Exist PHASE DIAGRAM

* = CONSTANT PHASE

THIS PLAN IS ACCURATE FOR ELECTRICAL WORK ONLY

SIGNAL AND LIGHTING (LOCATION 2)

(REMOVE)

SCALE: 1" = 20'

E-3

STATE OF CALIFORNIA - DEPARTMENT OF TRANSPORTATION
Caltrans®
CONSULTANT FUNCTIONAL SUPERVISOR: MARK ESPOSITO
CALCULATED-DESIGNED BY: ROSALVA NAVARRO
CHECKED BY: ARMANDO SOLIS
REVISED BY / DATE REVISED
08-MAR-2010 12:47
H:\pdata\10106777\CADD\TransPW\Cad_Out\FINAL\DGN\c0K580ua003.dgn
trmikesl

LAST REVISION 01-25-10 | DATE PLOTTED => 08-MAR-2010 | TIME PLOTTED => 12:47

BORDER LAST REVISED 4/11/2008 | RELATIVE BORDER SCALE IS IN INCHES 0 1 2 3 | USERNAME => trmikesl | DGN FILE => c0K580ua003.dgn | CU 12221 | EA 0K5801

Dist	COUNTY	ROUTE	POST MILES TOTAL PROJECT	SHEET No.	TOTAL SHEETS
12	Ora	22	12.6	19	34

REGISTERED CIVIL ENGINEER 1/26/10 DATE

3-8-10
PLANS APPROVAL DATE

REGISTERED PROFESSIONAL ENGINEER ARMANDO SOLIS No. 72012 Exp. 9/30/10 CIVIL STATE OF CALIFORNIA

THE STATE OF CALIFORNIA OR ITS OFFICERS OR AGENTS SHALL NOT BE RESPONSIBLE FOR THE ACCURACY OR COMPLETENESS OF SCANNED COPIES OF THIS PLAN SHEET.

RBF CONSULTING
14725 ALTON PKWY
IRVINE, CA. 92618-2027

NOTES: (THIS SHEET ONLY):

FOR ACCURATE RIGHT OF WAY DATA, CONTACT RIGHT OF WAY ENGINEERING AT THE DISTRICT OFFICE.

1. EXISTING MODEL 2070 CONTROLLER IN MODEL 332 CABINET WITH BATTERY BACKUP SYSTEM. PROTECT IN PLACE. INSTALL VIDEO IMAGE VEHICLE DETECTION SYSTEM (VIVDS) IN EXISTING INPUT FILES.
2. EXISTING 120/240 V TYPE III-BF METERED SERVICE EQUIPMENT ENCLOSURE. PROTECT IN PLACE. ID: 12-55-022-0-012.803-SCE. INSTALL NEW 15 A, 120 V, 1P, CIRCUIT BREAKER AND 30 A, 2PNO CONTACTOR FOR NEW IISNS CIRCUIT.
3. INSTALL SIGN AS NOTED PER STATE STANDARD PLAN ES-7N, DETAIL "U". SEE SHEET SQ-2 FOR SIGN QUANTITIES.
4. NOT AN ELECTRICAL PAY ITEM, FOR INFORMATION ONLY.
5. INSTALL VIDEO DETECTION CAMERA ON MAST ARM PER DETAIL ON SHEET E-5.
6. REPLACE EXISTING PULL BOX WITH NEW PULL BOX.
7. TERMINATE SIC IN TS CONTROLLER.
8. INSTALL PEDESTRIAN BARRICADE TYPE I WITH SIGNS AS NOTED. SEE SHEET SQ-2 FOR SIGN QUANTITIES.

DETAIL "A"

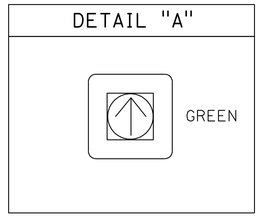

PHASE DIAGRAM

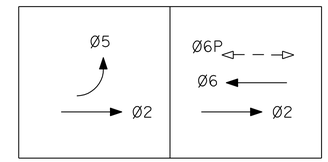

Ø2 CONSTANT GREEN

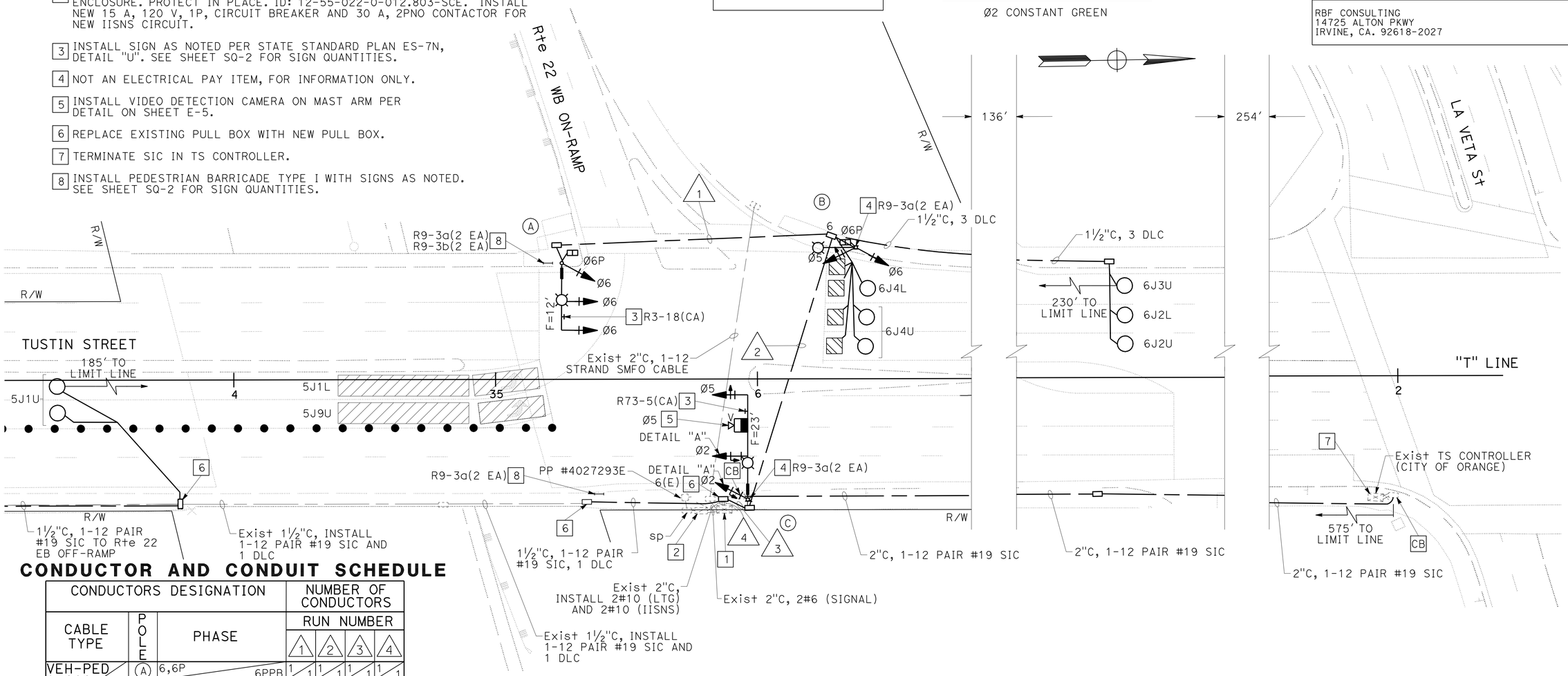

CONDUCTOR AND CONDUIT SCHEDULE

CONDUCTORS DESIGNATION			NUMBER OF CONDUCTORS			
CABLE TYPE	POLE	PHASE	RUN NUMBER 1	2	3	4
VEH-PED 12CSC / PPB 3CSC	A	6,6P / 6PPB	1 / 1	1 / 1	1 / 1	1 / 1
	B	5,6,6P / 6PPB	– / –	1 / 1	1 / 1	1 / 1
	C	2, 5 / –	– / –	– / –	1 / –	1 / –
TOTAL CABLES			1 / 1	2 / 2	3 / 2	3 / 2
#10		IISNS	2	2	2	–
		STREET LIGHTING	2	2	2	–
TOTAL #10 CONDUCTORS			4	4	4	–
TYPE C DLC		Ø5	–	–	–	1
		Ø6	–	5	5	5
TOTAL DLCs PER RUN			–	5	5	6
12 PAIR #19 SIC			–	–	–	2
VIDEO COAXIAL CABLE (Ø5)			–	–	1	1
3#16 VIDEO POWER CABLE			–	–	1	1
CONDUIT SIZE			2"	3"	3"	2-3" (E)

(E) = Exist

POLE AND EQUIPMENT SCHEDULE

No.	STANDARD TYPE	SMA	LMA	VEH SIG MTG MAST ARM	POLE	PED SIG MTG	PPB Ø	PPB ARROW	HPS LUM	IISNS
A	19-4-100	25′	15′	2-MAS	SV-1-T	SP-1-T	6	←	200 W	WB SR-22 →
B	15TS	–	15′	–	SV-2-TA	SP-1-T	6	→	200 W	–
C	26-4-100	40′	15′	1-MAS 1-MAT	SV-1-T	–	–	–	200 W	← WB SR-22

THIS PLAN IS ACCURATE FOR ELECTRICAL WORK ONLY.

SIGNAL AND LIGHTING (LOCATION 2)

SCALE: 1" = 20′

E-4

STATE OF CALIFORNIA - DEPARTMENT OF TRANSPORTATION
Caltrans
CONSULTANT FUNCTIONAL SUPERVISOR: MARK ESPOSITO
CALCULATED-DESIGNED BY: ROSALVA NAVARRO
CHECKED BY: ARMANDO SOLIS
REVISED BY / DATE REVISED
trmikesl 08-MAR-2010 13:43
H:\pdata\10106777\CADD\TransPW\Cad_Out\FINAL\DGN\c0K580ua004.dgn

LAST REVISION DATE PLOTTED => 08-MAR-2010
01-25-10 TIME PLOTTED => 13:43

Dist	COUNTY	ROUTE	POST MILES TOTAL PROJECT	SHEET No.	TOTAL SHEETS
12	Ora	22	12.6	20	34

REGISTERED CIVIL ENGINEER 1/26/10 DATE

3-8-10
PLANS APPROVAL DATE

REGISTERED PROFESSIONAL ENGINEER
ARMANDO SOLIS
No. 72012
Exp 9/30/10
CIVIL
STATE OF CALIFORNIA

THE STATE OF CALIFORNIA OR ITS OFFICERS OR AGENTS SHALL NOT BE RESPONSIBLE FOR THE ACCURACY OR COMPLETENESS OF SCANNED COPIES OF THIS PLAN SHEET.

RBF CONSULTING
14725 ALTON PKWY
IRVINE, CA. 92618-2027

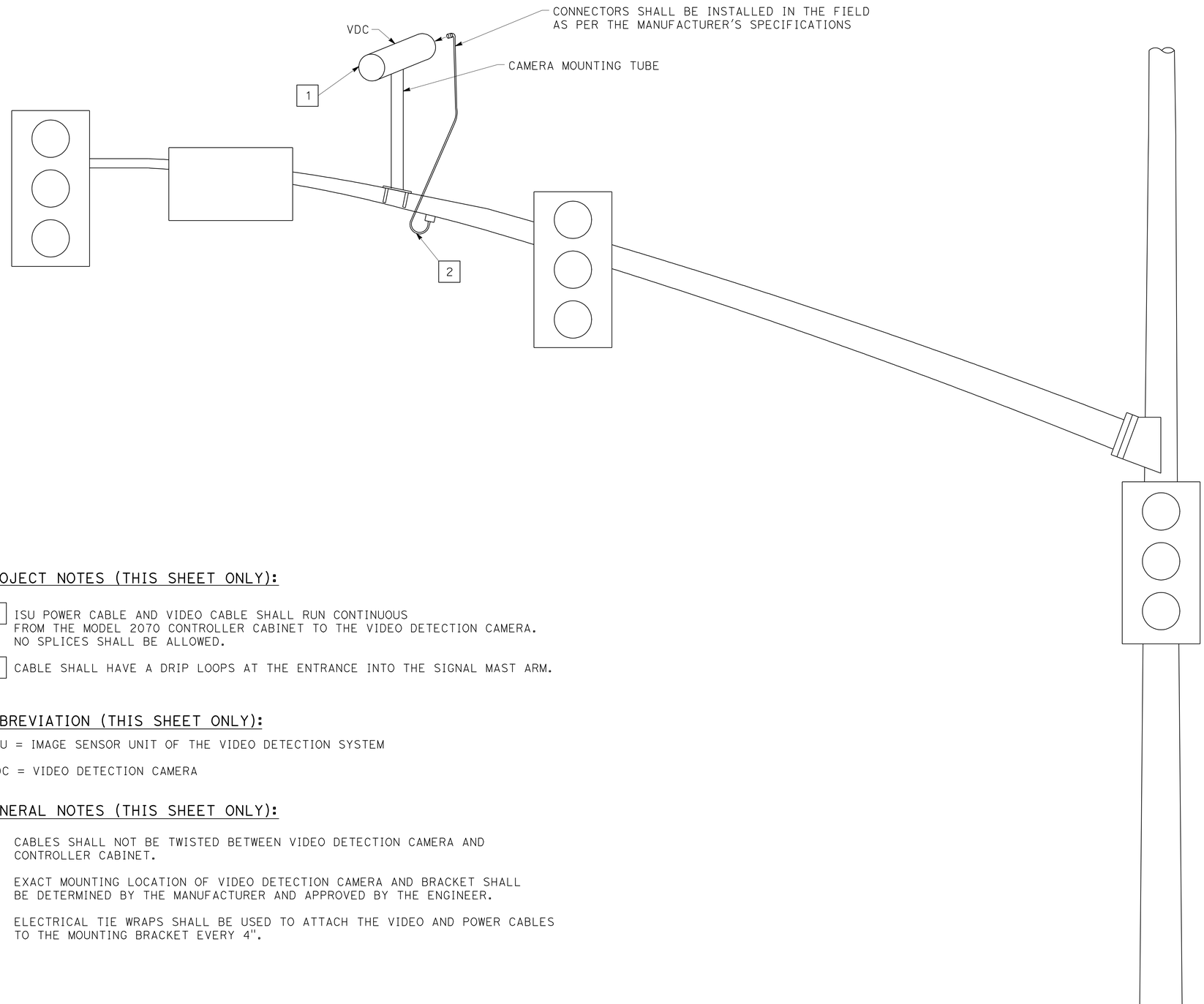

PROJECT NOTES (THIS SHEET ONLY):

1. ISU POWER CABLE AND VIDEO CABLE SHALL RUN CONTINUOUS FROM THE MODEL 2070 CONTROLLER CABINET TO THE VIDEO DETECTION CAMERA. NO SPLICES SHALL BE ALLOWED.
2. CABLE SHALL HAVE A DRIP LOOPS AT THE ENTRANCE INTO THE SIGNAL MAST ARM.

ABBREVIATION (THIS SHEET ONLY):

ISU = IMAGE SENSOR UNIT OF THE VIDEO DETECTION SYSTEM

VDC = VIDEO DETECTION CAMERA

GENERAL NOTES (THIS SHEET ONLY):

1. CABLES SHALL NOT BE TWISTED BETWEEN VIDEO DETECTION CAMERA AND CONTROLLER CABINET.
2. EXACT MOUNTING LOCATION OF VIDEO DETECTION CAMERA AND BRACKET SHALL BE DETERMINED BY THE MANUFACTURER AND APPROVED BY THE ENGINEER.
3. ELECTRICAL TIE WRAPS SHALL BE USED TO ATTACH THE VIDEO AND POWER CABLES TO THE MOUNTING BRACKET EVERY 4".

THIS PLAN IS ACCURATE FOR ELECTRICAL WORK ONLY.

SIGNAL AND LIGHTING (LOCATION 2) (VIDEO DETECTION CAMERA MOUNTING DETAILS)

NO SCALE

E-5

REVISED BY	DATE REVISED

CALCULATED-DESIGNED BY: ROSALVA NAVARRO
CHECKED BY: ARMANDO SOLIS
CONSULTANT FUNCTIONAL SUPERVISOR: MARK ESPOSITO

STATE OF CALIFORNIA - DEPARTMENT OF TRANSPORTATION
Caltrans

H:\pdata\10106777\CADD\TransPW\Cad_Out\FINAL\DGN\c0K580ug005.dgn trmikesl 08-MAR-2010 12:47

LAST REVISION 01-25-10
DATE PLOTTED => 08-MAR-2010
TIME PLOTTED => 12:47

DIST	COUNTY	ROUTE	POST MILES TOTAL PROJECT	SHEET NO.	TOTAL SHEETS
12	Ora	22	12.6	21	34

REGISTERED CIVIL ENGINEER

June 6, 2008
PLANS APPROVAL DATE

REGISTERED PROFESSIONAL ENGINEER
Donald E. Howe
No. C46402
Exp. 3-31-09
CIVIL
STATE OF CALIFORNIA

The State of California or its officers or agents shall not be responsible for the accuracy or completeness of electronic copies of this plan sheet.

To accompany plans dated 3-8-10

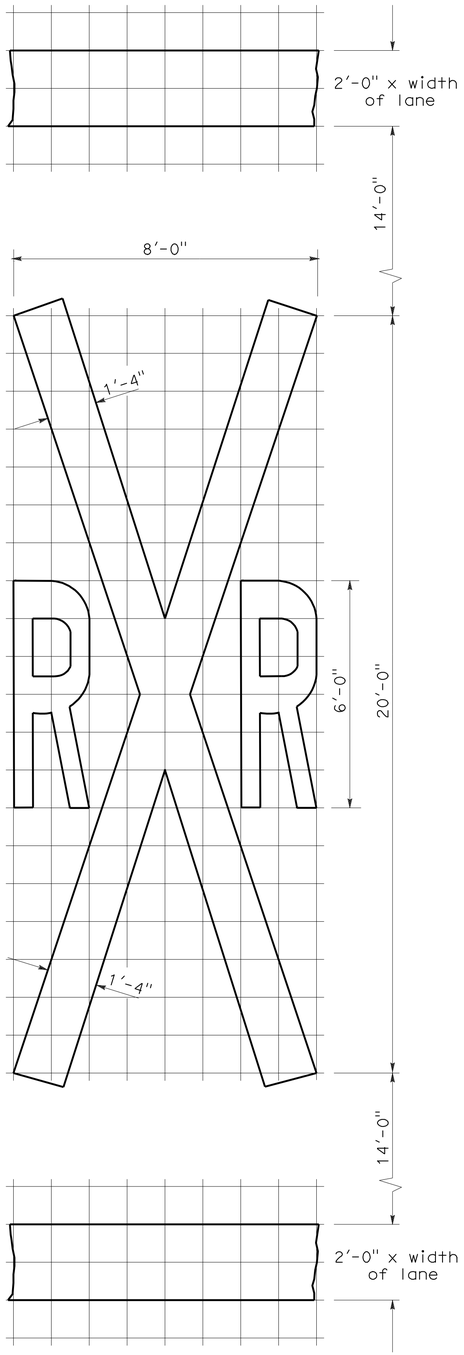

1'-0" GRID
A=70 sq ft ✳

RAILROAD CROSSING SYMBOL

✳70 sq ft DOES NOT INCLUDE THE 2'-0" x VARIABLE WIDTH TRANSVERSE LINES.

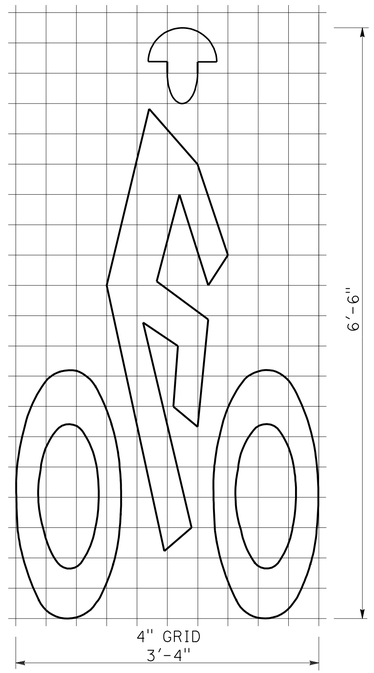

A=7 sq ft

BIKE LANE SYMBOL

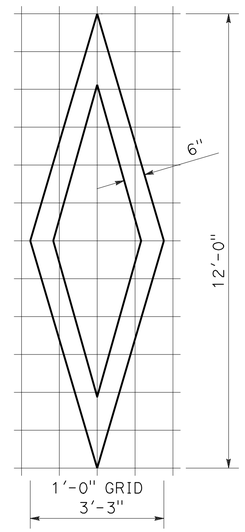

A=11 sq ft

DIAMOND SYMBOL

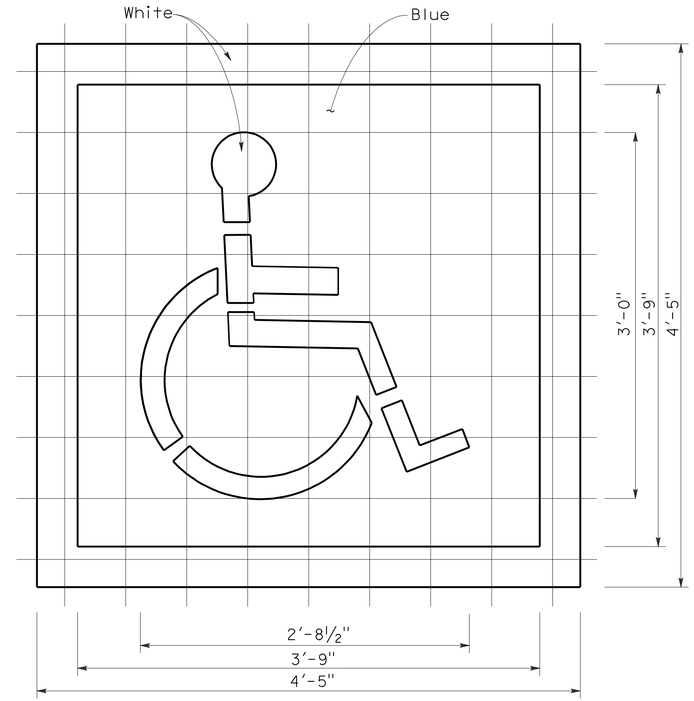

6" GRID
A (White) =9 sq ft
A (Blue) =14 sq ft

INTERNATIONAL SYMBOL OF ACCESSIBILITY MARKING

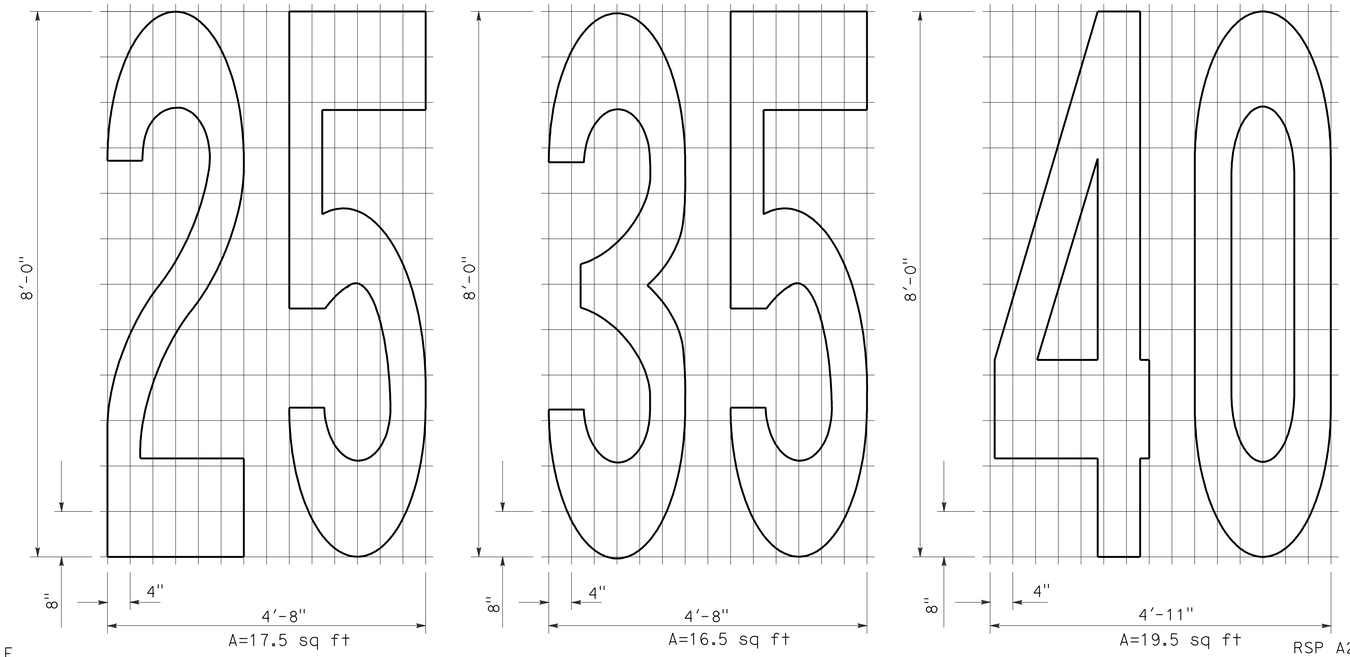

A=17.5 sq ft
A=16.5 sq ft
A=19.5 sq ft

NUMERALS

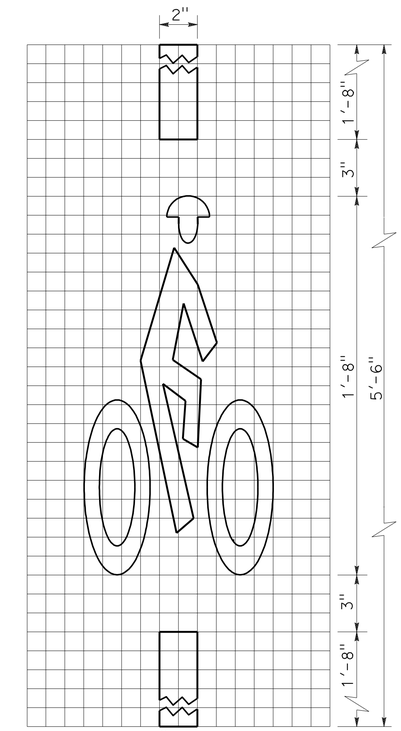

A=2 sq ft

BICYCLE LOOP DETECTOR SYMBOL

NOTE:

1. Minor variations in dimensions may be accepted by the Engineer.

STATE OF CALIFORNIA
DEPARTMENT OF TRANSPORTATION

PAVEMENT MARKINGS SYMBOLS AND NUMERALS

NO SCALE

RSP A24C DATED JUNE 6, 2008 SUPERSEDES STANDARD PLAN A24C DATED MAY 1, 2006 - PAGE 11 OF THE STANDARD PLANS BOOK DATED MAY 2006.

REVISED STANDARD PLAN RSP A24C

2006 REVISED STANDARD PLAN RSP A24C

5-27-08

DIST	COUNTY	ROUTE	POST MILES TOTAL PROJECT	SHEET NO.	TOTAL SHEETS
12	Ora	22	12.6	22	34

REGISTERED CIVIL ENGINEER

September 1, 2006
PLANS APPROVAL DATE

REGISTERED PROFESSIONAL ENGINEER — Hector David Cordova — No. C41957 — Exp. 3-31-08 — CIVIL — STATE OF CALIFORNIA

The State of California or its officers or agents shall not be responsible for the accuracy or completeness of electronic copies of this plan sheet.

To accompany plans dated 3-8-10

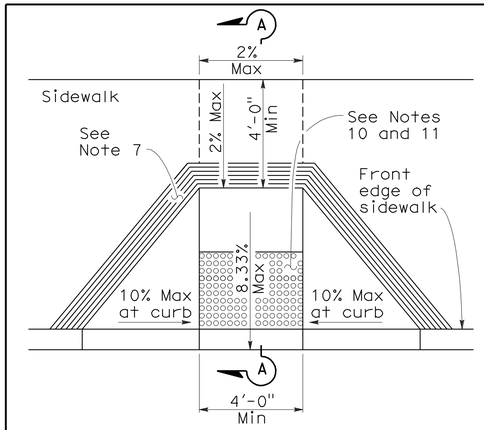

CASE A

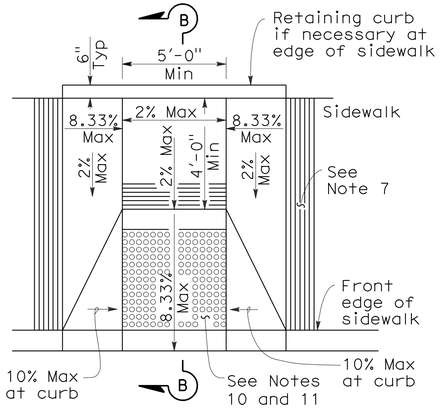

CASE B

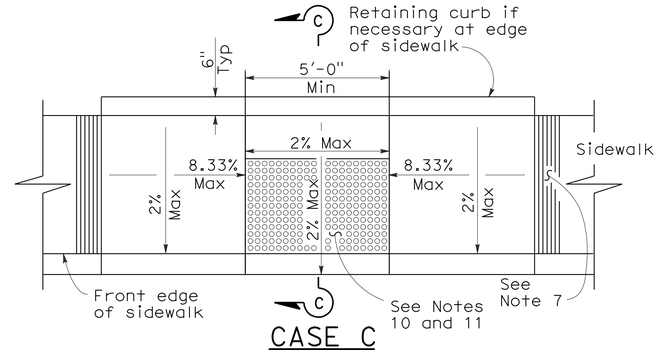

CASE C

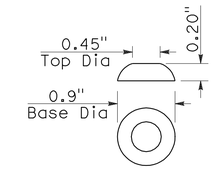

RAISED TRUNCATED DOME

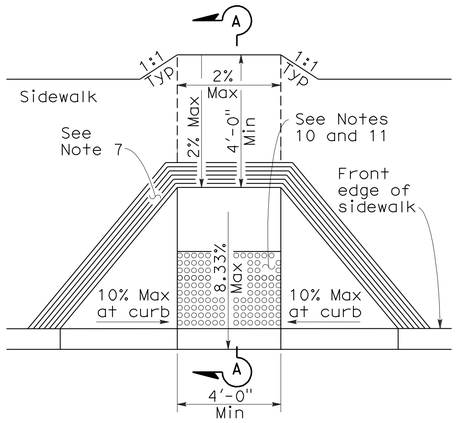

CASE D

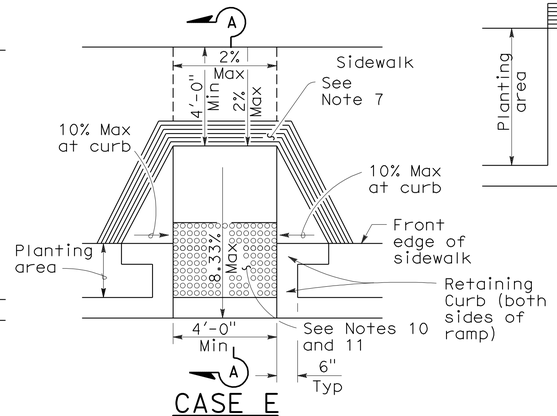

CASE E

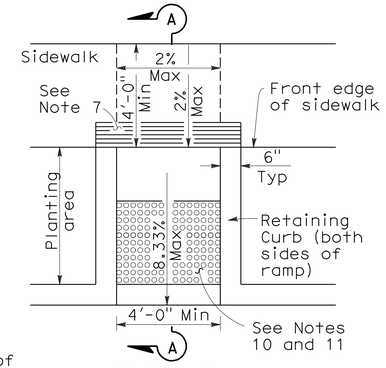

CASE F

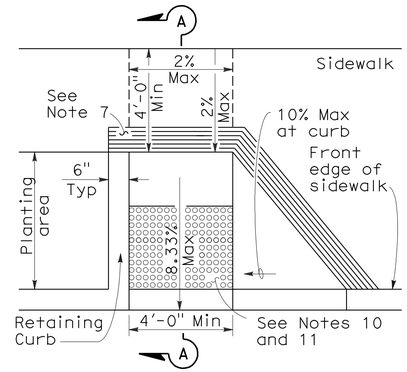

CASE G

See Note 4

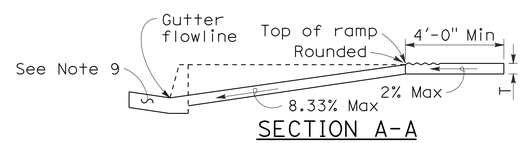

SECTION A-A

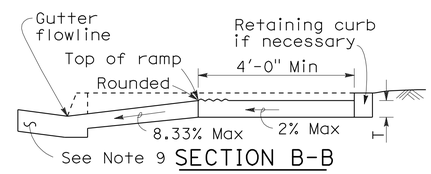

SECTION B-B

Depress entire sidewalk as required

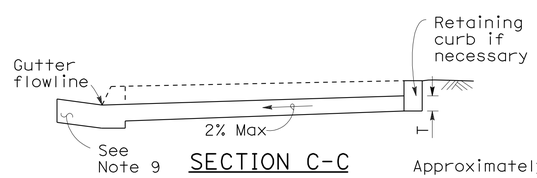

SECTION C-C

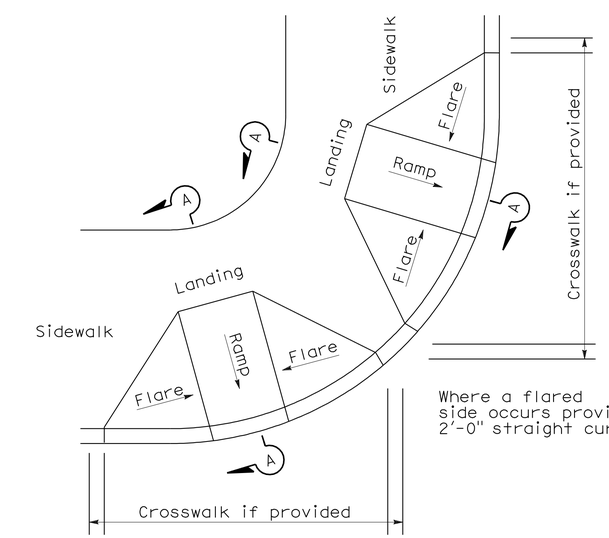

DETAIL A

TYPICAL TWO-RAMP CORNER INSTALLATION

See Note 1

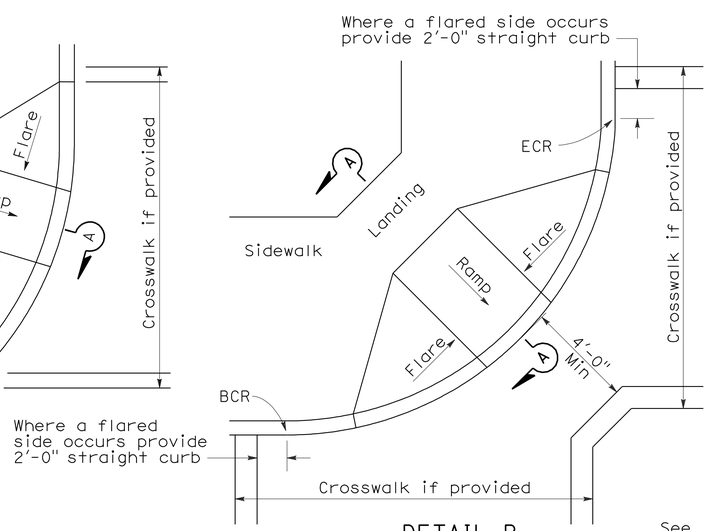

DETAIL B

TYPICAL ONE-RAMP CORNER INSTALLATION

See Notes 1 and 3

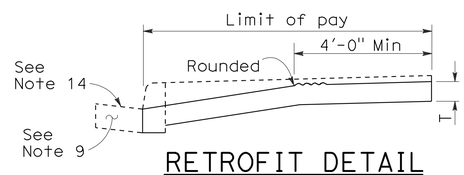

RETROFIT DETAIL

Existing curb and sidewalk

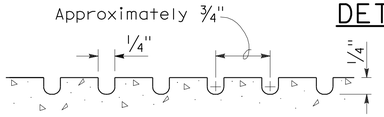

GROOVING DETAIL

NOTES:

1. As site conditions dictate, Case A through Case G curb ramps may be used for corner installations similar to those shown in Detail A and Detail B. The case of curb ramps used in Detail A do not have to be the same. Case A through Case G curb ramps also may be used at mid block locations, as site conditions dictate.
2. If distance from curb to back of sidewalk is too short to accommodate ramp and 4'-0" platform (landing) as shown in Case A, the sidewalk may be depressed longitudinally as in Case B, or C or may be widened as in Case D.
3. When ramp is located in center of curb return, crosswalk configuration must be similar to that shown for Detail B.
4. As site conditions dictate, the retaining curb side and the flared side of the Case G ramp shall be constructed in reversed position.
5. If located on a curve, the sides of the ramp need not be parallel, but the minimum width of the ramp shall be 4'-0".
6. Side slope of ramp flares vary uniformly from a maximum of 10% at curb to conform with longitudinal sidewalk slope adjacent to top of the ramp, except in Case C and Case F.
7. The curb ramp shall be outlined, as shown, with a 1'-0" wide border with 1/4" grooves approximately 3/4" on center. See grooving detail.
8. Transitions from ramps and landing to walks, gutters or streets shall be flush and free of abrupt changes.
9. Maximum slopes of adjoining gutters, the road surface immediately adjacent to the curb ramp or accessible route shall not exceed 5 percent within 4'-0" of the top and bottom of the curb ramp.
10. Curb ramps shall have a detectable warning surface that extends the full width and 3'-0" depth of the ramp. Detectable Warning Surfaces shall conform to the details on this plan and the requirements in the Special Provisions.
11. The edge of the detectable warning surface nearest the street shall be between 6" and 8" from the gutter flowline.
12. Sidewalk and ramp thickness, "T", shall be 3½" minimum.
13. Utility pull boxes, manholes, vaults and all other utility facilities within the boundaries of the curb ramp will be relocated or adjusted to grade by the owner prior to, or in conjunction with, curb ramp construction.
14. For retrofit conditions, removal and replacement of curb apron will be at the Contractor's option, unless otherwise shown on project plans.

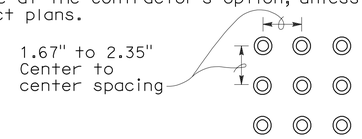

RAISED TRUNCATED DOME PATTERN (IN-LINE)

DETECTABLE WARNING SURFACE

See Note 10

STATE OF CALIFORNIA
DEPARTMENT OF TRANSPORTATION

CURB RAMP DETAILS

NO SCALE

RSP A88A DATED SEPTEMBER 1, 2006 SUPERSEDES STANDARD PLAN A88A DATED MAY 1, 2006 - PAGE 115 OF THE STANDARD PLANS BOOK DATED MAY 2006.

REVISED STANDARD PLAN RSP A88A

2006 REVISED STANDARD PLAN RSP A88A

8-3-06

DIST	COUNTY	ROUTE	POST MILES TOTAL PROJECT	SHEET NO.	TOTAL SHEETS
12	Ora	22	12.6	23	34

Randell D. Hiatt
REGISTERED CIVIL ENGINEER

June 6, 2008
PLANS APPROVAL DATE

REGISTERED PROFESSIONAL ENGINEER
Randell D. Hiatt
No. C50200
Exp. 6-30-09
CIVIL
STATE OF CALIFORNIA

The State of California or its officers or agents shall not be responsible for the accuracy or completeness of electronic copies of this plan sheet.

To accompany plans dated 3-8-10

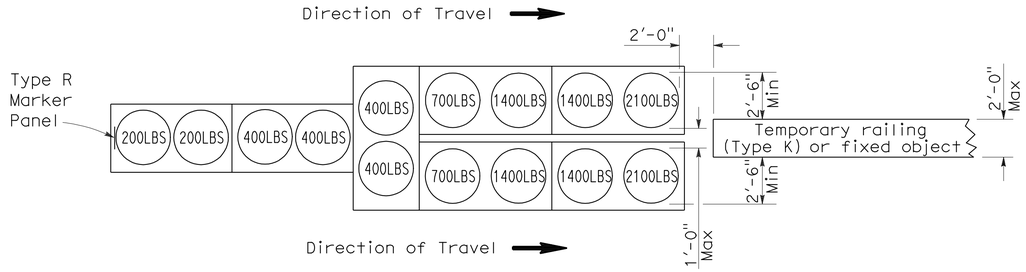

ARRAY 'TU14'

Approach speed 45 mph or more

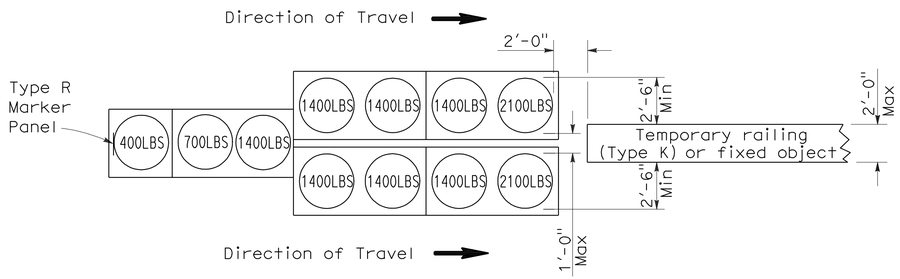

ARRAY 'TU11'

Approach speed less than 45 mph

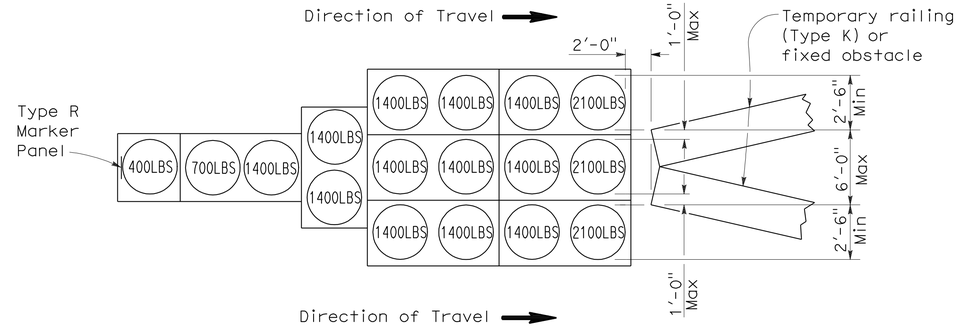

ARRAY 'TU17'

Approach speed less than 45 mph

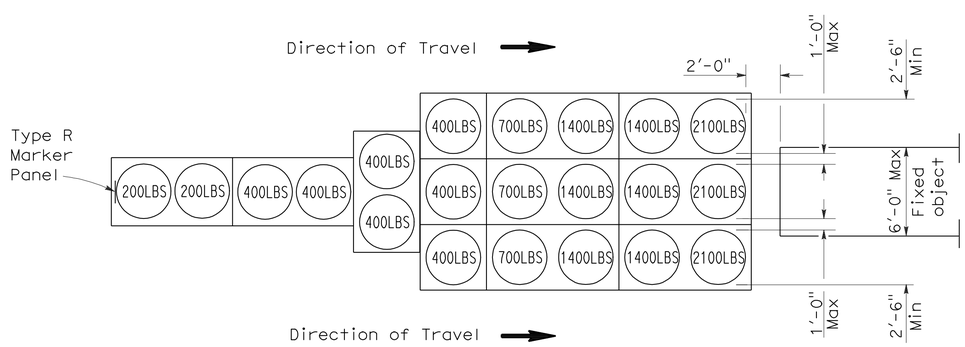

ARRAY 'TU21'

Approach speed 45 mph or more

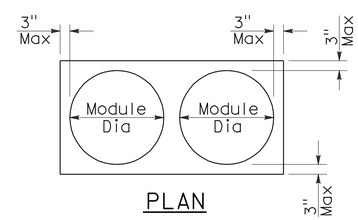

PLAN

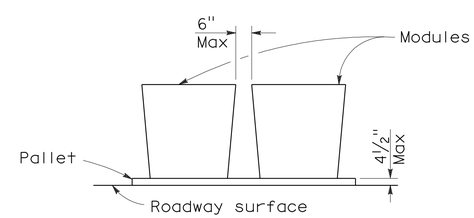

ELEVATION

CRASH CUSHION PALLET DETAIL

See Note 7

NOTES:

1. (XXX) Indicates sand filled module location and weight of sand in pounds for each module. Module spacing is based on the greater diameter of the module.
2. All sand weights are nominal.
3. Temporary crash cushion arrays shall not encroach on the traveled way.
4. Place the top of Type R marker panel 1" below the module lid.
5. Refer to Standard Plan A73B for marker details.
6. Approach speeds indicated conform to NCHRP 350 Report criteria.
7. Use of pallets is optional.

STATE OF CALIFORNIA
DEPARTMENT OF TRANSPORTATION

TEMPORARY CRASH CUSHION, SAND FILLED (UNIDIRECTIONAL)

NO SCALE

RSP T1A DATED JUNE 6, 2008 SUPERSEDES STANDARD PLAN T1A
DATED MAY 1, 2006 - PAGE 211 OF THE STANDARD PLANS BOOK DATED MAY 2006.

REVISED STANDARD PLAN RSP T1A

2006 REVISED STANDARD PLAN RSP T1A

DIST	COUNTY	ROUTE	POST MILES TOTAL PROJECT	SHEET NO.	TOTAL SHEETS
12	Ora	22	12.6	24	34

Randell D. Hiatt
REGISTERED CIVIL ENGINEER

June 6, 2008
PLANS APPROVAL DATE

REGISTERED PROFESSIONAL ENGINEER
Randell D. Hiatt
No. C50200
Exp. 6-30-09
CIVIL
STATE OF CALIFORNIA

The State of California or its officers or agents shall not be responsible for the accuracy or completeness of electronic copies of this plan sheet.

To accompany plans dated 3-8-10

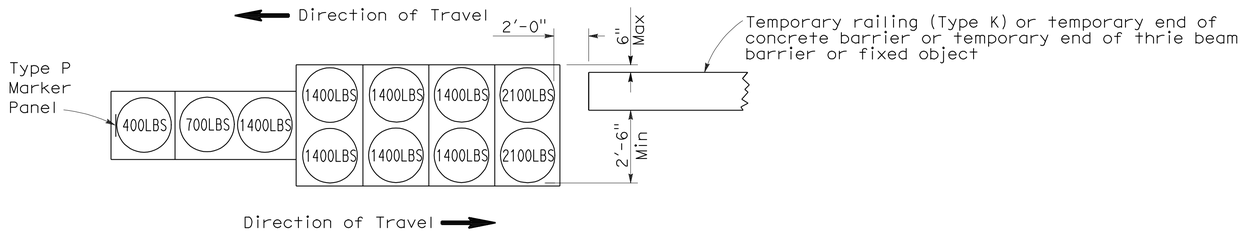

ARRAY 'TB11'

Approach speed less than 45 mph

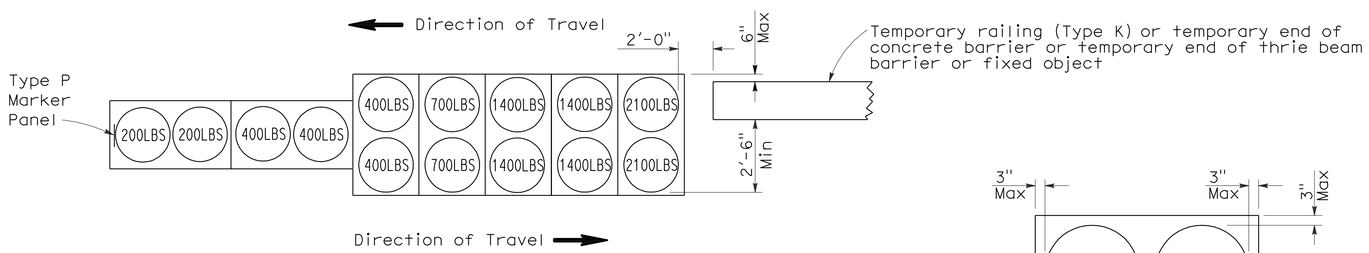

ARRAY 'TB14'

Approach speed 45 mph or more

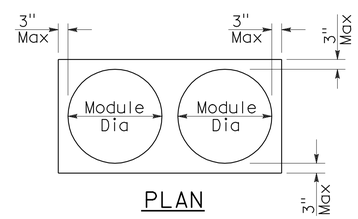

PLAN

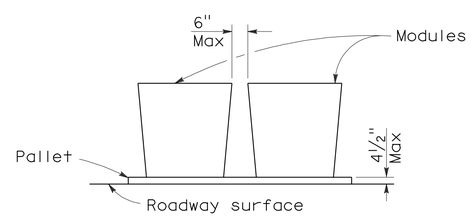

ELEVATION

CRASH CUSHION PALLET DETAIL

See Note 7

NOTES:

1. (XXX) Indicates sand filled module location and weight of sand in pounds for each module. Module spacing is based on the greater diameter of the module.
2. All sand weights are nominal.
3. Temporary crash cushion arrays shall not encroach on the traveled way.
4. Place the Type P marker panel so that the bottom of the panel rests upon the pallet.
5. Refer to Standard Plan A73B for marker details.
6. Approach speeds indicated conform to NCHRP 350 Report criteria.
7. Use of pallets is optional.

STATE OF CALIFORNIA
DEPARTMENT OF TRANSPORTATION

TEMPORARY CRASH CUSHION, SAND FILLED (BIDIRECTIONAL)

NO SCALE

RSP T1B DATED JUNE 6, 2008 SUPERSEDES STANDARD PLAN T1B
DATED MAY 1, 2006 - PAGE 212 OF THE STANDARD PLANS BOOK DATED MAY 2006.

REVISED STANDARD PLAN RSP T1B

2006 REVISED STANDARD PLAN RSP T1B

5-15-08

DIST	COUNTY	ROUTE	POST MILES TOTAL PROJECT	SHEET NO.	TOTAL SHEETS
12	Ora	22	12.6	25	34

Randell D. Hiatt
REGISTERED CIVIL ENGINEER

June 6, 2008
PLANS APPROVAL DATE

REGISTERED PROFESSIONAL ENGINEER
Randell D. Hiatt
No. C50200
Exp. 6-30-09
CIVIL
STATE OF CALIFORNIA

The State of California or its officers or agents shall not be responsible for the accuracy or completeness of electronic copies of this plan sheet.

To accompany plans dated 3-8-10

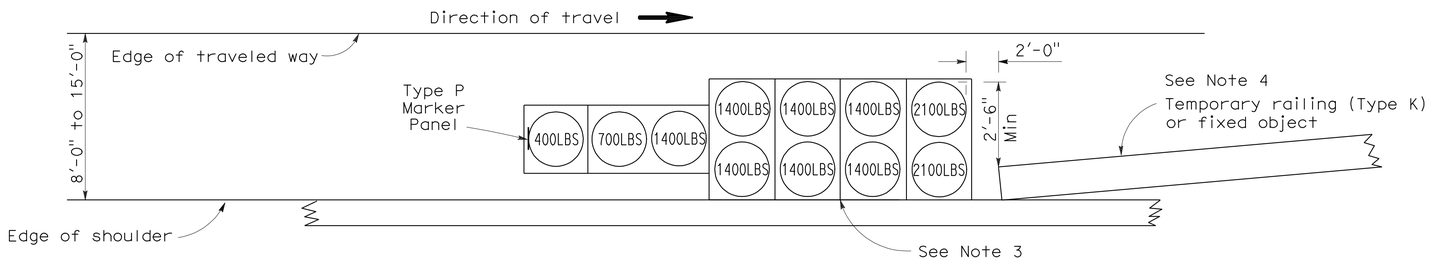

ARRAY 'TS11'

Approach speed less than 45 mph
See Note 9

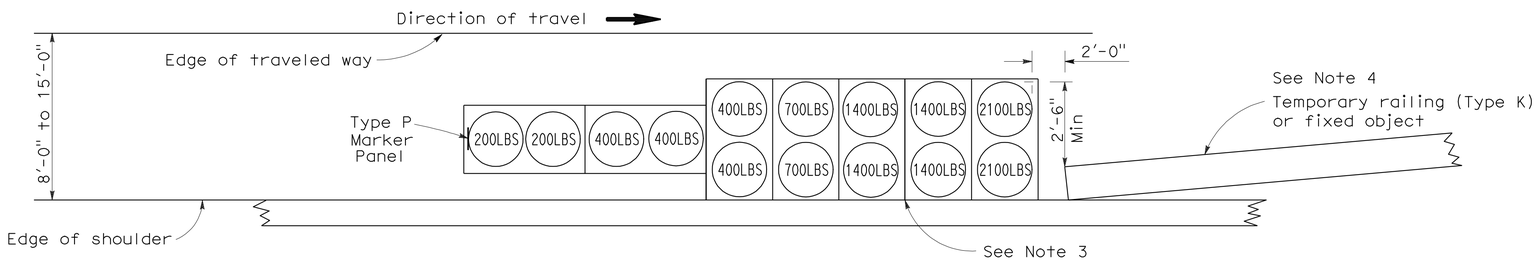

ARRAY 'TS14'

Approach speed 45 mph or more
See Note 9

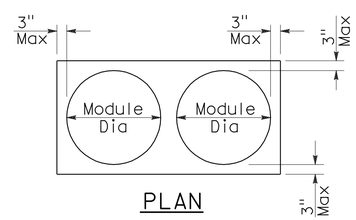

PLAN

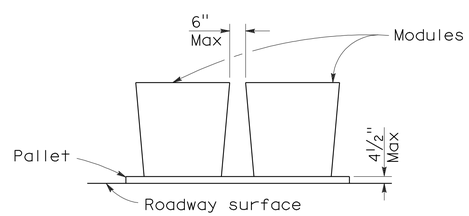

ELEVATION

CRASH CUSHION PALLET DETAIL

See Note 11

NOTES:

1. (XXX) Indicates sand filled module location and weight of sand in pounds for each module. Module spacing is based on the greater diameter of the module.
2. All sand weights are nominal.
3. The temporary crash cushion arrays shown on this plan shall be used only in locations where there will be traffic on one side of the temporary crash cushion array.
4. If the fixed object or approach end of the temporary railing is less than 15'-0" from the edge of traveled way, a temporary crash cushion is required in a construction or work zone.
5. Temporary crash cushion arrays shall not encroach on the traveled way.
6. Arrays for median shoulders shall conform to details shown on this plan for outside shoulders.
7. Place the Type P marker panel so that the bottom of the panel rests upon the pallet and faces traffic.
8. Refer to Standard Plan A73B for marker details.
9. For shoulder widths less than 8'-0", appropriate approved crash cushion protection, other than sand filled modules, shall be provided at fixed objects and at approach ends of temporary railing. The specific type of crash cushion shall be as shown on the project plans or as specified in the Special Provisions, or if not shown on the project plans or specified in the Special Provisions, shall be as approved by the Engineer.
10. Approach speeds indicated conform to NCHRP 350 Report criteria.
11. Use of pallets is optional.

STATE OF CALIFORNIA
DEPARTMENT OF TRANSPORTATION

TEMPORARY CRASH CUSHION, SAND FILLED (SHOULDER INSTALLATIONS)

NO SCALE

RSP T2 DATED JUNE 6, 2008 SUPERSEDES STANDARD PLAN T2
DATED MAY 1, 2006 - PAGE 213 OF THE STANDARD PLANS BOOK DATED MAY 2006.

REVISED STANDARD PLAN RSP T2

2006 REVISED STANDARD PLAN RSP T2

5-15-08

DIST	COUNTY	ROUTE	POST MILES TOTAL PROJECT	SHEET NO.	TOTAL SHEETS
12	Ora	22	12.6	26	34

LICENSED LANDSCAPE ARCHITECT

August 15, 2008
PLANS APPROVAL DATE

LICENSED LANDSCAPE ARCHITECT
Robert B. Schott 3625
Signature
11-04-08
Renewal Date
08-11-08
Date
STATE OF CALIFORNIA

The State of California or its officers or agents shall not be responsible for the accuracy or completeness of electronic copies of this plan sheet.

To accompany plans dated 3-8-10

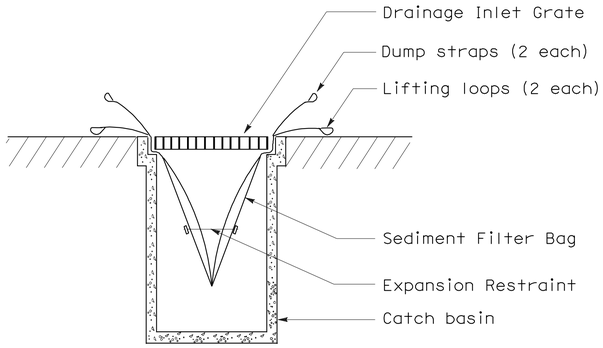

SECTION B-B

SEDIMENT FILTER BAG DETAIL

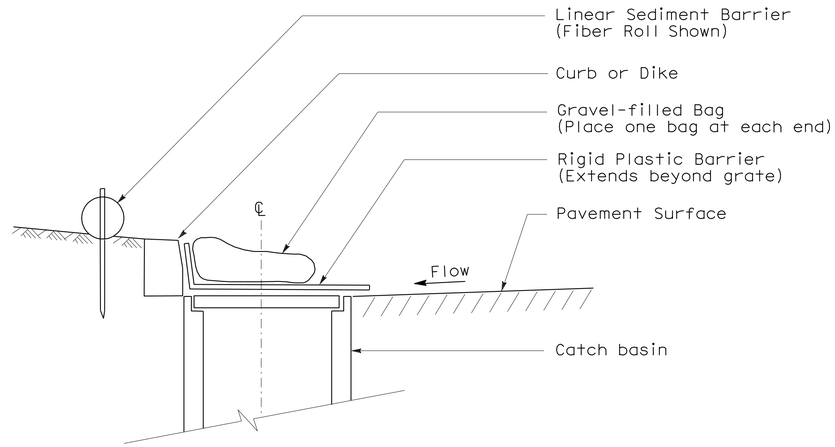

SECTION

TEMPORARY DRAINAGE INLET PROTECTION (TYPE 6A) (CATCH BASIN WITH GRATE)

NOTES:

1. See Standard Plan T51 for Temporary Silt Fence.
2. Dimensions may vary to fit field conditions.

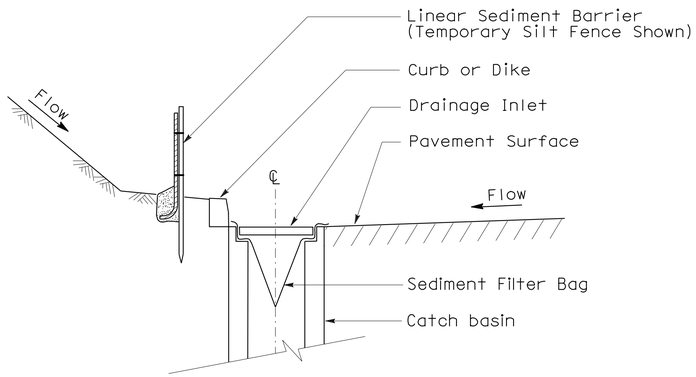

SECTION A-A

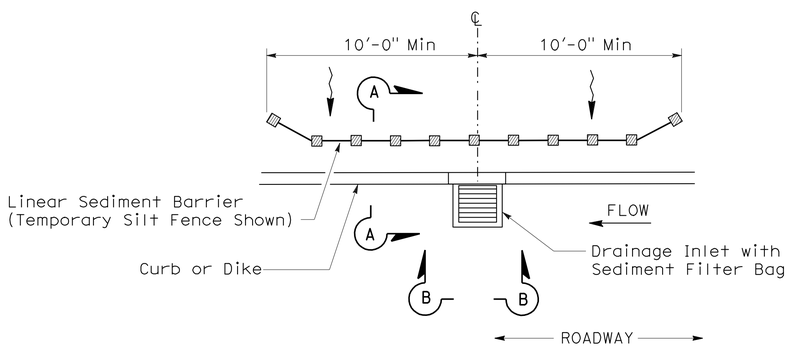

PLAN

TEMPORARY DRAINAGE INLET PROTECTION (TYPE 5) (SEDIMENT FILTER BAG)

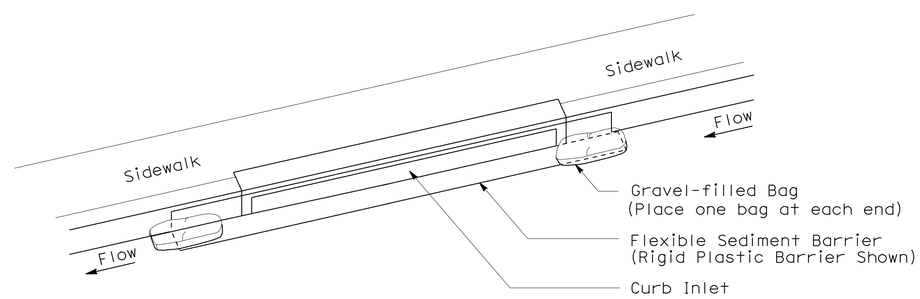

PERSPECTIVE

TEMPORARY DRAINAGE INLET PROTECTION (TYPE 6B) (CURB INLET WITHOUT GRATE)

STATE OF CALIFORNIA
DEPARTMENT OF TRANSPORTATION

TEMPORARY WATER POLLUTION CONTROL DETAILS (TEMPORARY DRAINAGE INLET PROTECTION)

NO SCALE

NSP T64 DATED AUGUST 15, 2008 SUPPLEMENTS
THE STANDARD PLANS BOOK DATED MAY 2006.

NEW STANDARD PLAN NSP T64

2006 NEW STANDARD PLAN NSP T64

7-11-08

DIST	COUNTY	ROUTE	POST MILES TOTAL PROJECT	SHEET NO.	TOTAL SHEETS
12	Ora	22	12.6	27	34

REGISTERED ELECTRICAL ENGINEER

October 5, 2007
PLANS APPROVAL DATE

REGISTERED PROFESSIONAL ENGINEER Jeffery G. McRae No. E14512 Exp. 6-30-08 ELECTRICAL STATE OF CALIFORNIA

The State of California or its officers or agents shall not be responsible for the accuracy or completeness of electronic copies of this plan sheet.

To accompany plans dated 3-8-10

2006 REVISED STANDARD PLAN RSP ES-1A

ELECTROLIERS

STANDARD TYPES
15, 15D
15 STRUCTURE
21, 21D STRUCTURE
30
31
32
35
36-20A

High mast light pole

Double Arm lighting standard

Existing electrolier

Electrolier foundation (Future installation)

NOTES:

1. Luminaires shall be 310 W HPS when installed on Type 21, 21D, 30, 31, 32, 35 and 36-20A Standards, unless otherwise specified. Luminaires shall be 200 W HPS when installed on other type standards or poles, unless otherwise specified.
2. Luminaires shall be the cutoff type, ANSI Type Ⅲ medium cutoff lighting distribution, unless otherwise specified.
3. Variations noted adjacent to symbol on project plans.

Electrolier (see project notes or project plans)

Luminaire on wood pole

STANDARD NOTES:

- AB Abandon. If applied to conduit, remove conductors.
- BC Install pull box in existing conduit run.
- BP Pedestrian barricade, type as indicated on plan.
- CB Install conduit into existing pull box.
- CC Connect new and existing conduit. Remove existing conductors and install conductors as indicated.
- CF Conduit to remain for future use. Remove conductors. Install pull wire or rope.
- DH Detector handhole.
- FA Foundation to be abandoned.
- IS Install sign on signal mast arm.
- NS No slip base on standard.
- PEC Photoelectric control.
- PEU Photoelectric unit.
- RC Equipment or material to be removed and become the property of the Contractor.
- RE Remove electrolier, fuses and ballast. Tape ends of conductors.
- RL Relocate equipment.
- RR Remove and reuse equipment.
- RS Remove and salvage equipment.
- SC Splice new to existing conductors.
- SD Service disconnect.
- SF Standard to remain for future use. Remove luminaire, pole conductors, fuses and ballast.
- TSP Telephone service point.

ABBREVIATIONS AND EQUIPMENT DESIGNATIONS

PROPOSED	EXISTING	
BBS	bbs	Battery backup system
BC	bc	Bolt circle
C	C	Conduit
CCTV	cctv	Closed circuit television
CKT	ckt	Circuit
CMS	cms	Changeable message sign
DLC	dlc	Loop detector lead-in cable
EMS	ems	Extinguishable message sign
EVC	evc	Emergency vehicle cable
EVD	evd	Emergency vehicle detector
FB	fb	Flashing beacon
FBCA	fbca	Flashing beacon control assembly
FBS	fbs	Flashing beacon with slip base
FO	fo	Fiber optic
G	G	Ground (Equipment Grounding Conductor)
GFCI	GFCI	Ground fault circuit interrupt
HAR	har	Highway advisory radio
HEX	hex	Hexagonal
HPS	hps	High pressure sodium
IISNS	iisns	Internally illuminated street name sign
ISL	isl	Induction sign lighting
LED	led	Light emitting diode
LMA	lma	Luminaire mast arm
LPS	lps	Low pressure sodium
LTG	ltg	Lighting
LUM	lum	Luminaire
MAT	mat	Mast arm mounting vehicle signal faces, top attachment
MAS	mas	Mast arm mounting vehicle signal faces, side attachment
MAS-4A	mas-4A	Mast arm mounting vehicle signal faces, side attachment - 4 signal section
MAS-4B	mas-4B	
MAS-4C	mas-4C	
MAS-5A	mas-5A	Mast arm mounting vehicle signal faces, side attachment - 5 signal section
MAS-5B	mas-5B	
MC	mc	Mercury contactor
M/M	m/m	Multiple to multiple transformer
MT	mt	Conduit with pull wire or rope only
MTG	mtg	Mounting
	mv	Mercury vapor lighting fixture
N	N	Neutral (Grounded Conductor)
NC	NC	Normally closed
NO	NO	Normally open
PB	pb	Pull box
PEC	pec	Photoelectric control (Type Ⅰ, Ⅱ, Ⅲ, Ⅳ or Ⅴ as shown)
PED	ped	Pedestrian
PEU	peu	Photoelectric unit
PPB	ppb	Pedestrian push button
RL		Relocated equipment
RM	rm	Ramp metering
SB	sb	Slip base
SIC	sic	Signal interconnect cable
SIG	sig	Signal
SMA	sma	Signal mast arm
SNS	sns	Street name sign
SP	sp	Service point
TDC	tdc	Telephone demarcation cabinet
TMS	tms	Traffic monitoring station
TOS	tos	Traffic Operations System
VEH	veh	Vehicle
XFMR	xfmr	Transformer
COMM	comm	Communication
RWIS	rwis	Roadway weather information system

SOFFIT AND WALL MOUNTED LUMINAIRES

Pendant, 70 W HPS unless otherwise specified.

Flush, 70 W HPS unless otherwise specified.

Wall surface, 70 W HPS unless otherwise specified.

Existing soffit or wall luminaire to remain unmodified.

Existing soffit or wall luminaire to be modified as specified.

NOTE:

Arrow indicates "street side" of luminaire.

STATE OF CALIFORNIA
DEPARTMENT OF TRANSPORTATION

ELECTRICAL SYSTEMS (SYMBOLS AND ABBREVIATIONS)

NO SCALE

RSP ES-1A DATED OCTOBER 5, 2007 SUPERSEDES STANDARD PLAN ES-1A DATED MAY 1, 2006 - PAGE 400 OF THE STANDARD PLANS BOOK DATED MAY 2006.

REVISED STANDARD PLAN RSP ES-1A

DIST	COUNTY	ROUTE	POST MILES TOTAL PROJECT	SHEET NO.	TOTAL SHEETS
12	Ora	22	12.6	28	34

REGISTERED ELECTRICAL ENGINEER

October 5, 2007
PLANS APPROVAL DATE

REGISTERED PROFESSIONAL ENGINEER Jeffery G. McRae No. E14512 Exp. 6-30-08 ELECTRICAL STATE OF CALIFORNIA

The State of California or its officers or agents shall not be responsible for the accuracy or completeness of electronic copies of this plan sheet.

To accompany plans dated 3-8-10

CONDUIT

PROPOSED	EXISTING	
		Lighting Conduit, unless otherwise indicated or noted
		Traffic signal conduit
C	c	Communication conduit
T	t	Telephone conduit
F	f	Fire alarm conduit
FO	fo	Fiber optic conduit
		Conduit termination (RSP ES-9A C)
R	r	Conduit riser in/on structure or service pole

SERVICE EQUIPMENT

PROPOSED	EXISTING	
OH	oh	Overhead lines
U	U	Wood pole "U" indicates utility owned
		Pole guy with anchor
		Utility transformer - ground mounted
III		Service equipment enclosure type
		Service equipment enclosure door indicates front of enclosure
T	t	Telephone demarcation cabinet

POLE-MOUNTED SERVICE DESIGNATION

Type of installation

TYPE H SERVICE - 28'-10" ← Pole height above grade

ILLUMINATED OVERHEAD SIGN

PROPOSED	EXISTING	
		Overhead sign - Single post
		Overhead sign - Two post
		Overhead sign - Mounted on structure
		Overhead sign with electrolier

SIGNAL EQUIPMENT

PROPOSED	EXISTING	
		Pedestrian signal face
		Pedestrian push button post
		Pedestrian barricade
		Vehicle signal face (with backplate, 3-Section: red, yellow and green)
		Vehicle signal face with angle visors
PV	PV	Modifications of basic symbols: "L" indicates all non-arrow sections louvered "LG" indicates louvered green section only "PV" indicates 12" programmed visibility sections "8" indicates all 8" sections (only when specified)
		Type 15TS and Vehicle signal face
		Vehicle signal face with red, yellow and green left arrow sections
		Vehicle signal face with red and yellow sections and up green arrow
		Vehicle signal face (5 Section) with red, yellow and green sections and yellow and green right arrows
		Type 1 Standard and attached vehicle signal faces
		Standard with signal mast arm only and attached vehicle signal faces and internally illuminated street name sign
		Type 33 Standard, Left-turn vehicle signal face and sign
		Standard with luminaire and signal mast arms and attached vehicle signal faces
		Cantilever flashing beacon Type 9 Frame, with a sign unless otherwise specified or indicated
		Type 15-FBS Standard with two vehicle signal face sections with lens, backplate and visor with a sign
R	Y	Flashing beacon. One vehicle signal face section with lens, backplate and visor. "R" indicates red indication, "Y" indicates yellow indication
		Controller assembly. Door indicates front of cabinet

SIGNAL EQUIPMENT Cont

PROPOSED	EXISTING	
		Guard post
		Type 1 Standard with "Meter On" sign
		Emergency Vehicle detector

NOTES:

1. All signal sections shall be 12" unless shown otherwise.
2. Signal heads shall be provided with backplates unless shown otherwise.
3. Signal indication shall be LED.

STATE OF CALIFORNIA
DEPARTMENT OF TRANSPORTATION

ELECTRICAL SYSTEMS (SYMBOLS AND ABBREVIATIONS)

NO SCALE

RSP ES-1B DATED OCTOBER 5, 2007 SUPERCEDES STANDARD PLAN ES-1B DATED MAY 1, 2006 - PAGE 401 OF THE STANDARD PLANS BOOK DATED MAY 2006.

REVISED STANDARD PLAN RSP ES-1B

2006 REVISED STANDARD PLAN RSP ES-1B

7-10-07

DIST	COUNTY	ROUTE	POST MILES TOTAL PROJECT	SHEET NO.	TOTAL SHEETS
12	Ora	22	12.6	29	34

REGISTERED ELECTRICAL ENGINEER

October 5, 2007
PLANS APPROVAL DATE

The State of California or its officers or agents shall not be responsible for the accuracy or completeness of electronic copies of this plan sheet.

REGISTERED PROFESSIONAL ENGINEER
Jeffery G. McRae
No. E14512
Exp. 6-30-08
ELECTRICAL
STATE OF CALIFORNIA

To accompany plans dated 3-8-10

EQUIPMENT IDENTIFICATION

ILLUMINATED SIGN IDENTIFICATION NUMBER:

Sign No. 12345 — Sign number - Place on post or structure

10 ISL SCI 1.0

- 1.0 — Transformer rating (kVA)
- SCI — Lighting control type
- ISL — Number and type of fixtures

Do NOT place on standard or structure

ELECTROLIER OR EQUIPMENT IDENTIFICATION NUMBER:

12345 - 15'-0"

- 15'-0" — Mast arm length, if shown. Do not place on standard or structure.
- 12345 — Equipment number - Place on standard or structure. Existing equipment numbers are shown in parenthesis

CONDUIT AND CONDUCTOR IDENTIFICATION:

1½"C, 2#10, 15#14, 2 DLC

- 2#10, 15#14, 2 DLC — Number and size of conductors and cables
- 1½"C — Size of conduit in inches

Ø1, Ø2, Ø2P, etc.	Traffic phase identification for signal faces, detectors and phase diagrams
1 2 3	Project note numbers
A B C	Equipment description, installation or item numbers
1 2 3	Conduit run numbers

SIGNAL AND LIGHTING STANDARD (TYPICAL DESIGNATION):

19A - 3 - 100

- 100 — Wind velocity = 100 mph
- 3 — Case 3 arm loading
- 19A — Standard type
- Standard Plan sheet number
- Detail number or letter

MISCELLANEOUS EQUIPMENT

PROPOSED	EXISTING	
CMS	cms	Changeable message sign
		Closed circuit television camera
		Highway advisory radio pole and antenna
EMS	ems	Extinguishable message sign
M V	m v	Detection device M = Microwave sensor V = Video image sensor

WIRING DIAGRAM LEGEND

P	Pole
CB	Circuit breaker
A	Ampere
V	Volt
M	Metered
UM	Unmetered
NB	Neutral bus
GB	Ground bus
G	Equipment grounding conductor
N	Grounded conductor (Neutral)

- External conductor
- Conductor or bus
- Tie point
- Contactor coil
- Contactor, Contact NO
- Terminal blocks
- Contactor, Contact NC
- Enclosure bond
- Grounding electrode
- Circuit breaker
- Receptacle

PULL BOXES

PROPOSED EXISTING

Pull box-No. 5 unless otherwise indicated or noted.

3 — 9A(21)

Pull box-Additional designations or descriptions

- 3 = No. 3½ pull box
- 5 = No. 5 pull box
- 6 = No. 6 pull box
- 7 = No. 7 (Ceiling pull box)
- 8 = No. 8 (Pendant soffit pull box)
- 9 = No. 9 pull box
- 9A = No. 9A pull box

- (C) = Communications pull box
- (E) = Pull box with extension
- (S) = Sprinkler control pull box
- (21) = Anchor bolts and conduit for future installation of Type 21 Standard
- (T) = Traffic pull box

VEHICLE DETECTORS

5 J 9 U

- U = Upper
- L = Lower
- Slot number in input file
- Input file (I or J)
- Phase

PROPOSED	EXISTING	
		Type A detector loop. Outline of sawcut shown.
		Type B detector loop. Outline of sawcut shown.
		Type C detector loop. Outline of sawcut shown.
		Type D detector loop. Outline of sawcut shown.
		Type E detector loop. Outline of sawcut shown.
		Type Q detector loop. Outline of sawcut shown.
		Magnetic detector
DH	dh	Detector handhole
		Microwave or video detection zone

STATE OF CALIFORNIA
DEPARTMENT OF TRANSPORTATION

ELECTRICAL SYSTEMS (SYMBOLS AND ABBREVIATIONS)

NO SCALE

RSP ES-1C DATED OCTOBER 5, 2007 SUPERCEDES STANDARD PLAN ES-1C DATED MAY 1, 2006 - PAGE 402 OF THE STANDARD PLANS BOOK DATED MAY 2006.

REVISED STANDARD PLAN RSP ES-1C

2006 REVISED STANDARD PLAN RSP ES-1C

DIST	COUNTY	ROUTE	POST MILES TOTAL PROJECT	SHEET NO.	TOTAL SHEETS
12	Ora	22	12.6	30	34

REGISTERED ELECTRICAL ENGINEER

June 6, 2008
PLANS APPROVAL DATE

REGISTERED PROFESSIONAL ENGINEER
Jeffery G. McRae
No. E14512
Exp. 6-30-10
ELECTRICAL
STATE OF CALIFORNIA

The State of California or its officers or agents shall not be responsible for the accuracy or completeness of electronic copies of this plan sheet.

To accompany plans dated 3-8-10

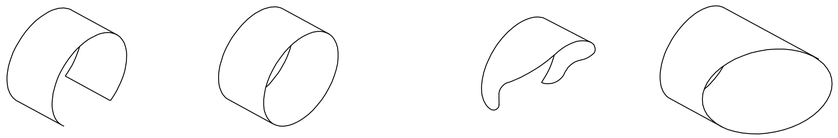

VISORS

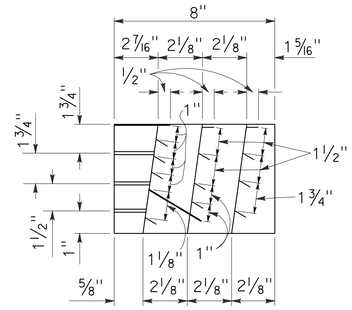

SECTION A-A

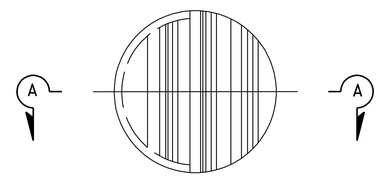

FRONT VIEW

DIRECTIONAL LOUVER

Directional louvers shall be oriented as directed by the Engineer and secured in place with one plated brass machine screw and nut.

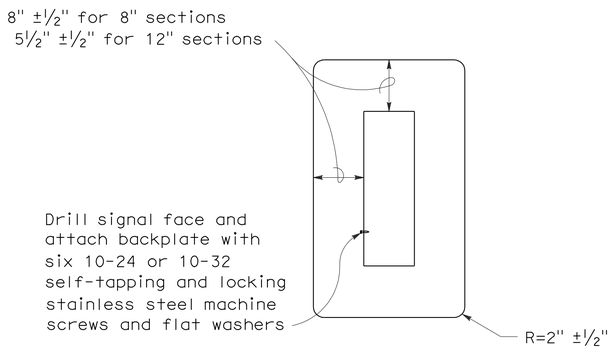

8" AND 12" SECTIONS

BACKPLATE

1/16" minimum thickness
3001-14 aluminum, or plastic when specified

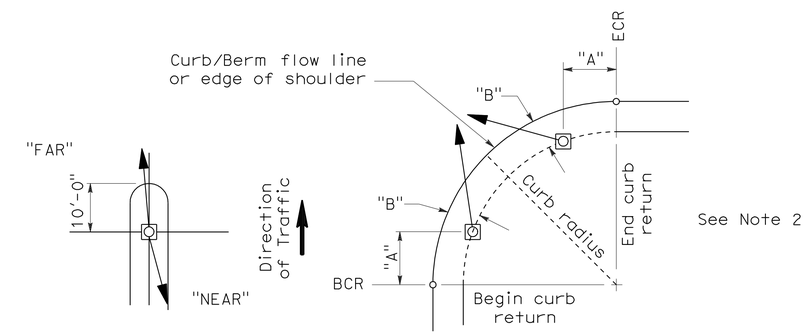

NOTES:

1. Typical signal pole placement unless dimensioned on plans.
2. For "A" and "B" dimensions, see Pole Schedule, or as directed by the Engineer.

SIGNAL STANDARD PLACEMENT DIMENSIONS AND EQUIPMENT LOCATIONS

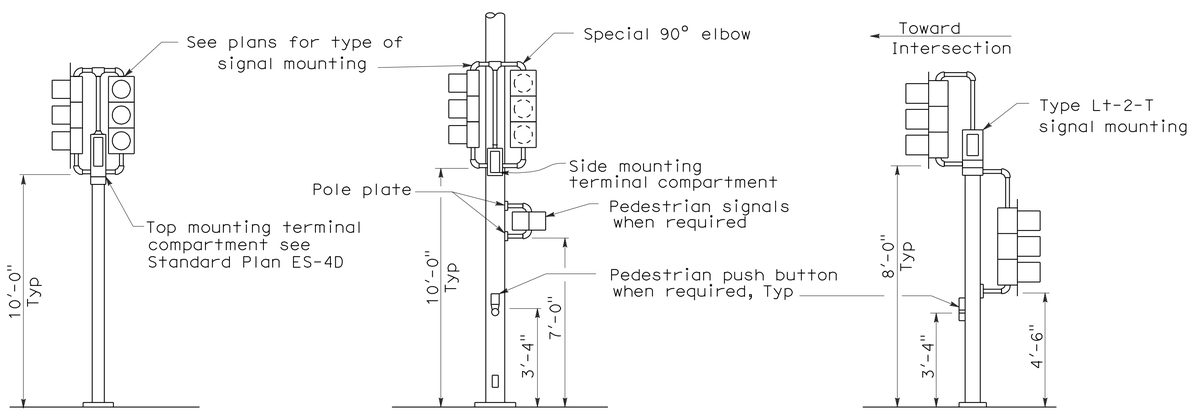

TOP MOUNTED SIGNALS (TV)
Type 1-A, 1-B, 1-C and 1-D standard as indicated on the plans

SIDE MOUNTED SIGNALS (SV AND SP)
Normally used on standards with luminaire or signal mast arm

LEFT TURN LANE SIGNAL
Type 1-A, 1-B, 1-C and 1-D standard as indicated on plans

TYPICAL SIGNAL INSTALLATIONS

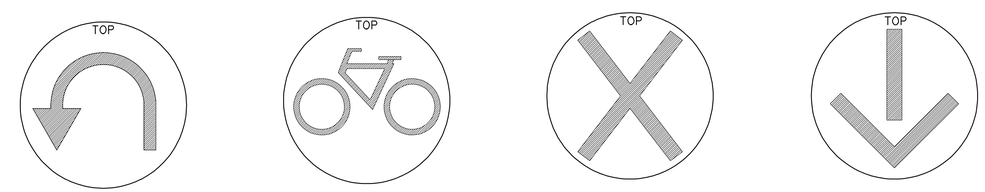

U-TURN SIGNAL FACE

BICYCLE SIGNAL FACE

LANE CONTROL SIGNAL FACE

LANE CONTROL SIGNAL FACE

STATE OF CALIFORNIA
DEPARTMENT OF TRANSPORTATION

ELECTRICAL SYSTEMS (SIGNAL HEADS AND MOUNTINGS)

NO SCALE

RSP ES-4C DATED JUNE 6, 2008 SUPERSEDES STANDARD PLAN ES-4C DATED MAY 1, 2006 - PAGE 420 OF THE STANDARD PLANS BOOK DATED MAY 2006.

REVISED STANDARD PLAN RSP ES-4C

2006 REVISED STANDARD PLAN RSP ES-4C

5-19-08

DIST	COUNTY	ROUTE	POST MILES TOTAL PROJECT	SHEET NO.	TOTAL SHEETS
12	Ora	22	12.6	31	34

REGISTERED ELECTRICAL ENGINEER

June 6, 2008
PLANS APPROVAL DATE

REGISTERED PROFESSIONAL ENGINEER Jeffery G. McRae No. E14512 Exp. 6-30-10 ELECTRICAL STATE OF CALIFORNIA

The State of California or its officers or agents shall not be responsible for the accuracy or completeness of electronic copies of this plan sheet.

To accompany plans dated 3-8-10

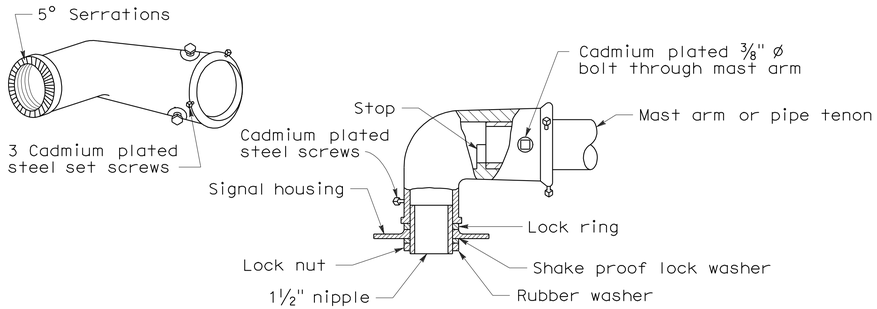

MAST ARM MOUNTING - TYPE "MAT"

For 2 NPS pipe, see Note 1.

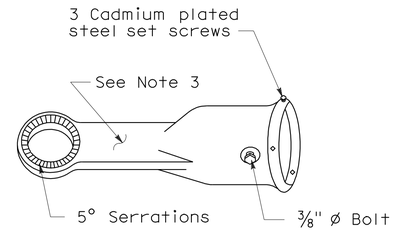

MAST ARM MOUNTING - TYPE "MAS"

For 2 NPS pipe. See Note 1.

SIGNAL SLIP FITTERS

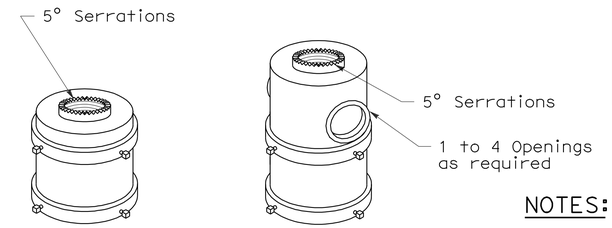

For one mounting — For mulitiple mountings

TOP MOUNTINGS

For 4 NPS pipe, see Note 2.

NOTES:

1. After mast arm signal has been plumbed and secured, drill 7/16" hole through mast arm tenon in line with slip fitter hole. Place a cadmium plated ⅜" ø galvanized bolt with washer under bolt head through hole and secure with washer, nut, and locknut. Seal openings between mast arm mountings and mast arm with mastic.
2. (a) Threaded top mounted slip fitter openings shall be 1½ NPS.
   (b) Serrations in fittings shall match those on bottom of signal heads or in lock ring.
   (c) Top opening shall be offset when backplate is used.
3. Wireway shall have a cross section area of 0.95 square inch minimum. Minimum width of ½".

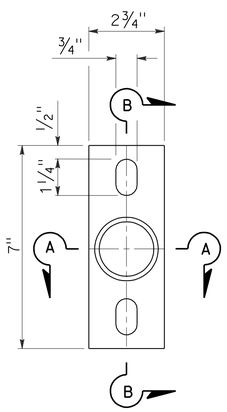

POLE PLATE

For side mountings

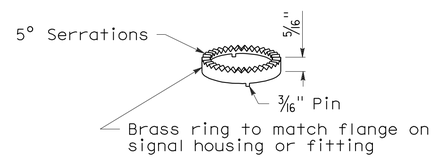

LOCK RING

Use where locking ring is not integral with signal housing or fitting.

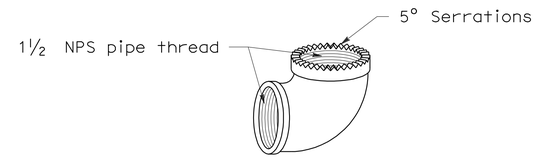

SPECIAL 90° ELBOW

One for each signal head, except those with special slip fitter mounting

MISCELLANEOUS MOUNTING HARDWARE

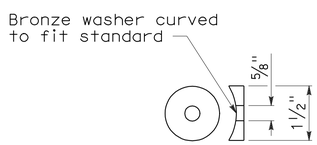

DETAIL "C"

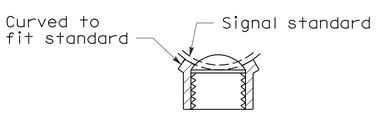

SECTION A-A

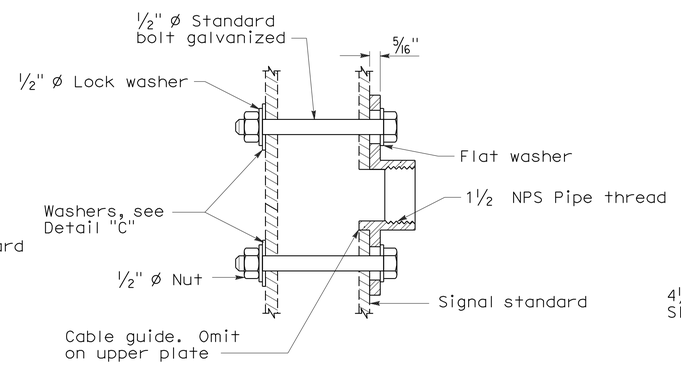

SECTION B-B

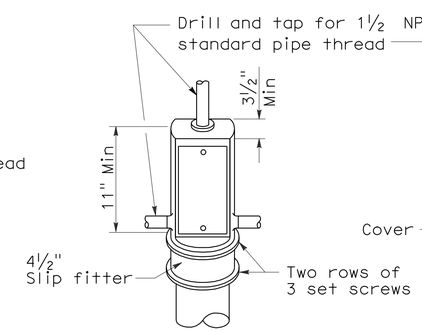

TOP MOUNTING

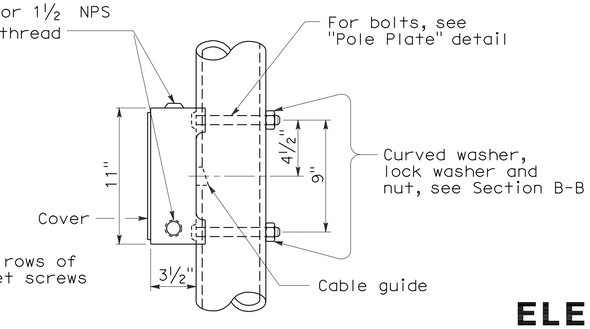

SIDE MOUNTING

TERMINAL COMPARTMENTS

STATE OF CALIFORNIA
DEPARTMENT OF TRANSPORTATION

ELECTRICAL SYSTEMS (SIGNAL HEADS AND MOUNTINGS)

NO SCALE

RSP ES-4D DATED June 6, 2008 SUPERSEDES STANDARD PLAN ES-4D
DATED MAY 1, 2006 - PAGE 421 OF THE STANDARD PLANS BOOK DATED MAY 2006.

REVISED STANDARD PLAN RSP ES-4D

2006 REVISED STANDARD PLAN RSP ES-4D

5-19-08

DIST	COUNTY	ROUTE	POST MILES TOTAL PROJECT	SHEET NO.	TOTAL SHEETS
12	Ora	22	12.6	32	34

REGISTERED ELECTRICAL ENGINEER

October 5, 2007
PLANS APPROVAL DATE

REGISTERED PROFESSIONAL ENGINEER Jeffery G. McRae No. E14512 Exp. 6-30-08 ELECTRICAL STATE OF CALIFORNIA

The State of California or its officers or agents shall not be responsible for the accuracy or completeness of electronic copies of this plan sheet.

To accompany plans dated 3-8-10

LOOP INSTALLATION PROCEDURE

1. Loops shall be centered in lanes.
2. Saw slots in pavement for loop conductors as shown in details.
3. Distance between side of loop and a lead-in saw cut from adjacent detectors shall be 2'-0" minimum. Distance between lead-in saw cuts shall be 6" minimum.
4. Bottom of saw slot shall be smooth with no sharp edges.
5. Slots shall be washed until clean, blown out and thoroughly dried before installing loop conductors.
6. Adjacent loops on the same sensor unit channel shall be wound in opposite directions.
7. Identify and tag loop circuit pairs in the pull box with loop number, start (S) and finish (F) of conductor. Identify and tag lead-in-cable with sensor number and phase.
8. Install loop conductor in slot using a 3/16" to 1/4" thick wood paddle. Hold loop conductors with wood paddles (at the bottom of the sawed slot) during sealant placement.
9. No more than 2 twisted pairs shall be installed in one sawed slot.
10. Allow additional 5'-0" of slack length of conductor for the lead-in run to pull box.
11. The additional length of each conductor for each loop shall be twisted together into a pair (6 turns per 3'-4" minimum) before being placed in the slot and conduit leading to pull box.
12. Test each loop circuit for continuity, circuit resistance and insulation resistance at the pull box before filling slots.
13. Fill slots as shown in details.
14. Splice loop conductors to lead-in-cable. Splices shall be soldered.
15. End of lead-in-cable and Type 2 loop conductor shall be waterproofed prior to installing in conduit to prevent moisture from entering the cable.
16. Lead-in-cable shall not be spliced between the pull box and the controller cabinet terminals.
17. Test each loop circuit for continuity, circuit resistance and insulation resistance at the controller cabinet location.
18. Where loop conductors are not to be spliced to a lead-in-cable, the ends of the conductors shall be taped and waterproofed with electrical insulating coating.

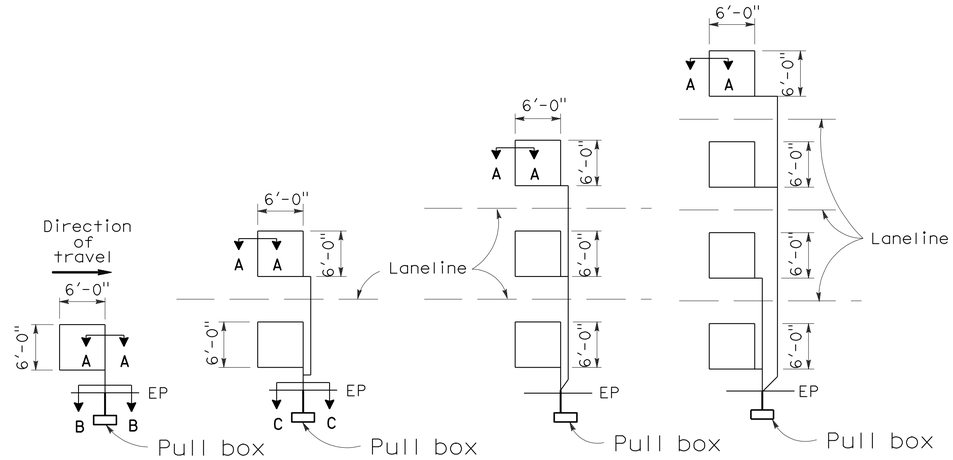

TYPE 1A INSTALLATION | TYPE 2A INSTALLATION | TYPE 3A INSTALLATION | TYPE 4A INSTALLATION

SAWCUT DETAILS

(Type A loop detector configurations illustrated)

1. 1A thru 4A = 1 Type A loop configuration in each lane.
2. 1B thru 4B = 1 Type B loop configuration in each lane.
3. 1C = 1 Type C loop configuration entering lanes as required.
4. 1D thru 4D = 1 Type D loop configuration in each lane.
5. 1E thru 4E = 1 Type E loop configuration in each lane.
6. 1Q thru 4Q = 1 Type Q loop configuration in each lane. (Use Type A, B, C, D, E or Q loop detector configurations only when specified or shown on plans)

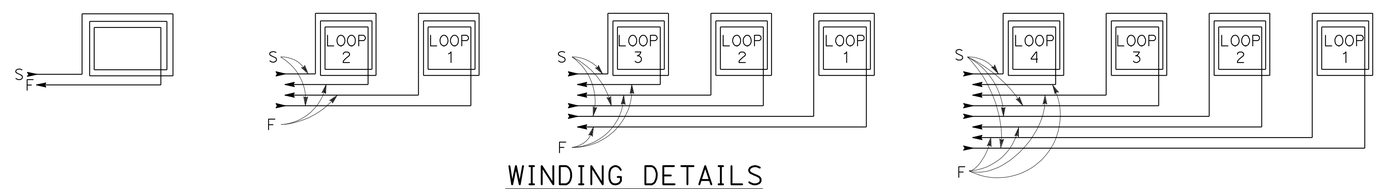

WINDING DETAILS

See Notes 6 and 7

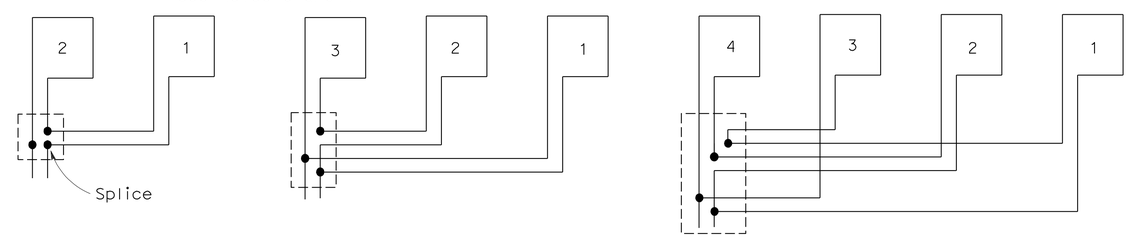

TYPICAL LOOP CONNECTIONS

(Dashed lines represent the pull box)

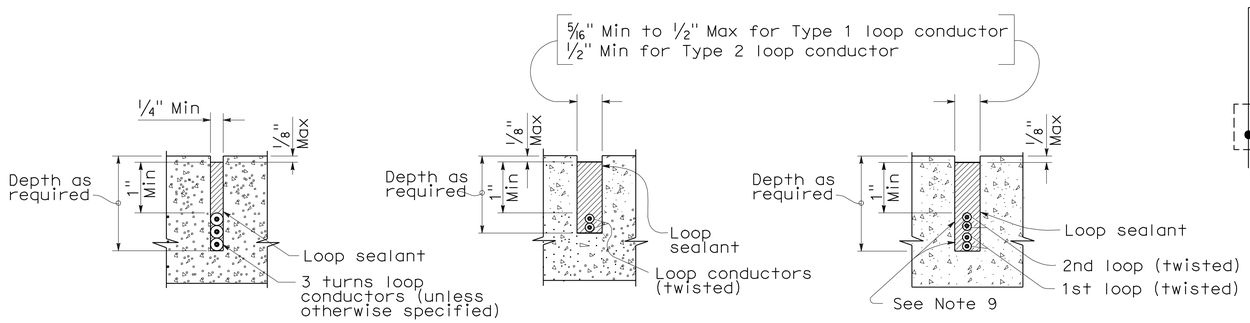

SECTION A-A | SECTION B-B | SECTION C-C

SLOT DETAILS - TYPE 1 AND TYPE 2 LOOP CONDUCTOR

STATE OF CALIFORNIA
DEPARTMENT OF TRANSPORTATION

ELECTRICAL SYSTEMS (DETECTORS)

NO SCALE

RSP ES-5A DATED OCTOBER 5, 2007 SUPERCEDES STANDARD PLAN ES-5A DATED MAY 1, 2006 - PAGE 423 OF THE STANDARD PLANS BOOK DATED MAY 2006.

REVISED STANDARD PLAN RSP ES-5A

2006 REVISED STANDARD PLAN RSP ES-5A

8-17-07

DIST	COUNTY	ROUTE	POST MILES TOTAL PROJECT	SHEET NO.	TOTAL SHEETS
12	Ora	22	12.6	33	34

REGISTERED CIVIL ENGINEER

October 5, 2007
PLANS APPROVAL DATE

REGISTERED PROFESSIONAL ENGINEER Stanley P. Johnson No. C57793 Exp. 3-31-08 CIVIL STATE OF CALIFORNIA

The State of California or its officers or agents shall not be responsible for the accuracy or completeness of electronic copies of this plan sheet.

To accompany plans dated 3-8-10

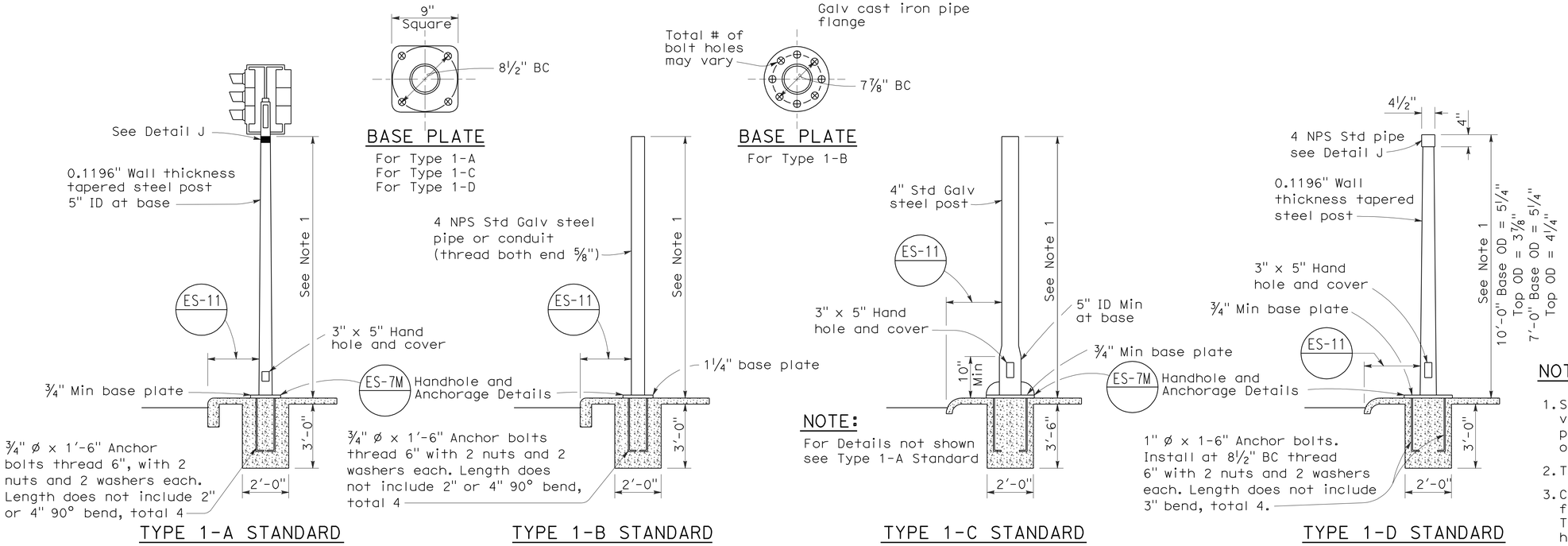

TYPE 1 SIGNAL STANDARDS

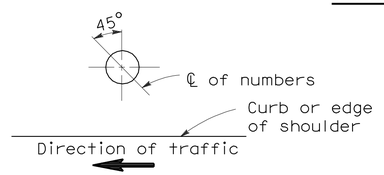

PLAN

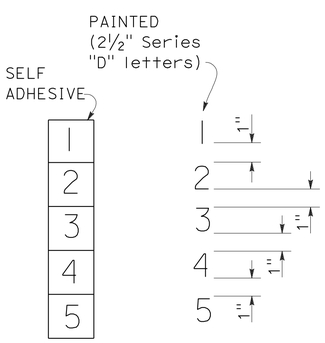

NUMBER DETAIL

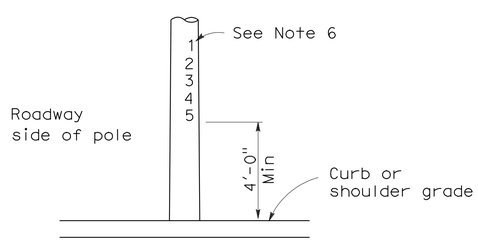

TYPICAL NUMBER FORMAT

LOCATION OF EQUIPMENT NUMBERS ON STANDARDS AND POSTS

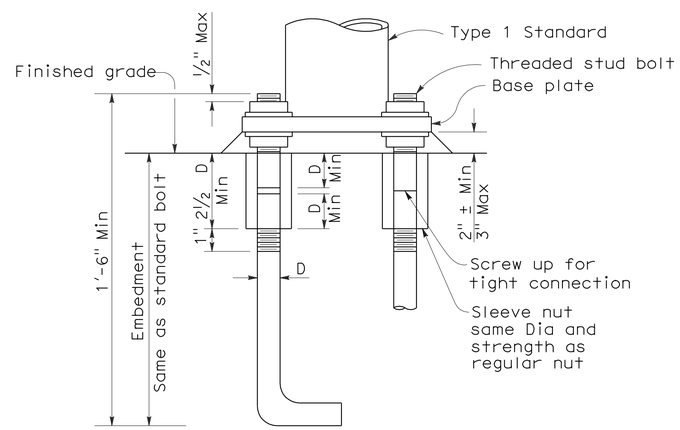

ANCHOR BOLTS WITH SLEEVE NUTS

Sleeve nuts to be used only when shown or specified on Project Plans

D = Diameter of anchor bolt

NOTES:

1. Standards shall be 10'-0" ± 2" for vehicle signals and 7'-0" ± 2" for pedestrian signals unless otherwise noted on plans.
2. Top of standards shall be 4½" OD.
3. Conduits shall extend 2" maximum above finished surface of foundation and for Types 1-A, 1-C and 1-D shall be sloped toward handhole.
4. Anchor bolts shall be bonded to conduit or grounding conductor.
5. Conduit between standard and adjacent pull box shall be 2" minimum.
6. Paint numbers on roadway side facing traffic when electrolier or post is left of direction of traffic.

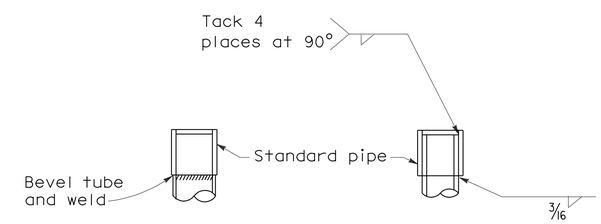

DETAIL J

Tube may be inserted into pipe or butted as required

STATE OF CALIFORNIA
DEPARTMENT OF TRANSPORTATION

ELECTRICAL SYSTEMS (SIGNAL AND LIGHTING STANDARD TYPE 1 STANDARD AND EQUIPMENT NUMBERING)

NO SCALE

RSP ES-7B DATED OCTOBER 5, 2007 SUPERCEDES STANDARD PLAN ES-7B DATED MAY 1, 2006 - PAGE 438 OF THE STANDARD PLANS BOOK DATED MAY 2006.

REVISED STANDARD PLAN RSP ES-7B

2006 REVISED STANDARD PLAN RSP ES-7B

DIST	COUNTY	ROUTE	POST MILES TOTAL PROJECT	SHEET NO.	TOTAL SHEETS
12	Ora	22	12.6	34	34

REGISTERED CIVIL ENGINEER

October 5, 2007
PLANS APPROVAL DATE

Stanley P. Johnson
No. C57793
Exp. 3-31-08
CIVIL
REGISTERED PROFESSIONAL ENGINEER
STATE OF CALIFORNIA

The State of California or its officers or agents shall not be responsible for the accuracy or completeness of electronic copies of this plan sheet.

To accompany plans dated 3-8-10

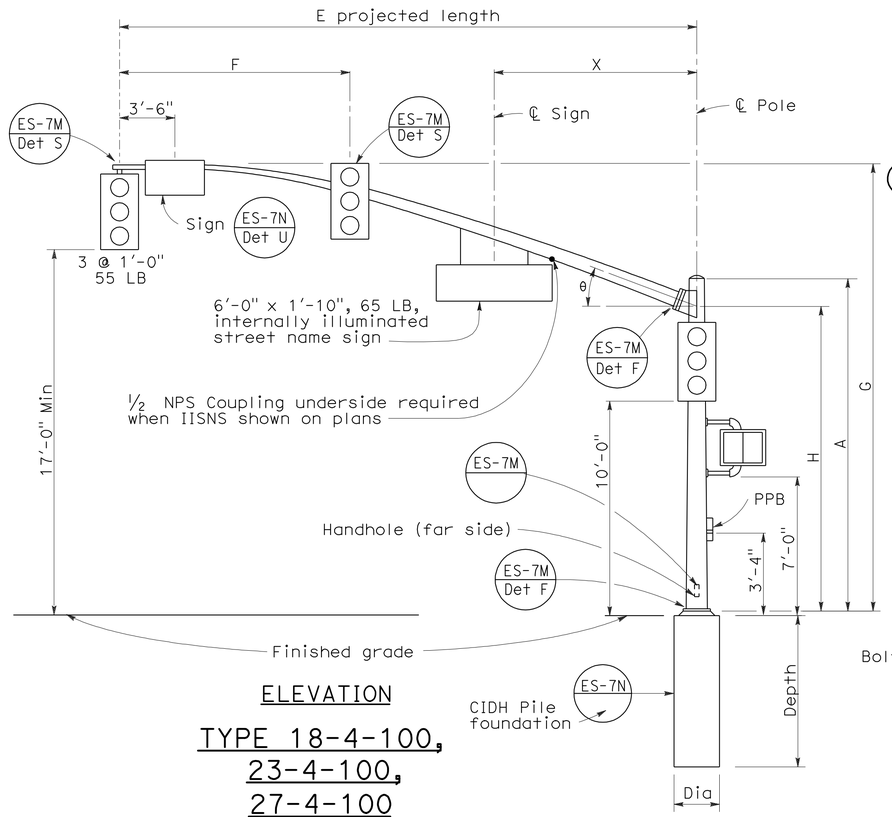

ELEVATION

TYPE 18-4-100, 23-4-100, 27-4-100

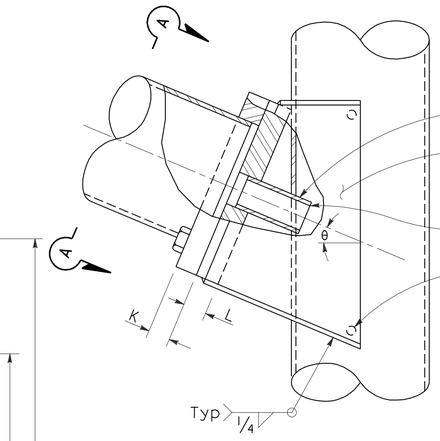

ELEVATION

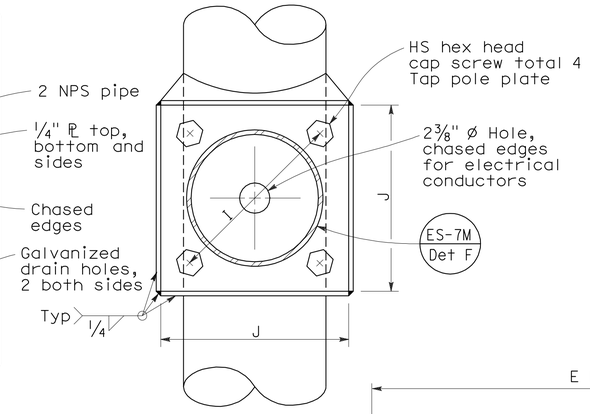

VIEW A-A

SIGNAL ARM CONNECTION DETAILS

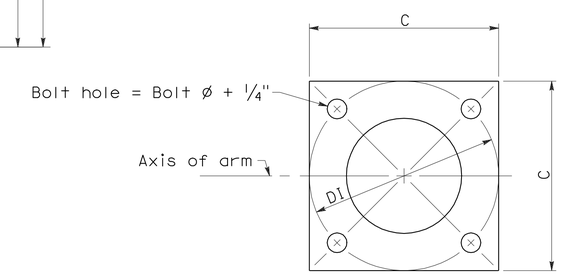

BASE PLATE

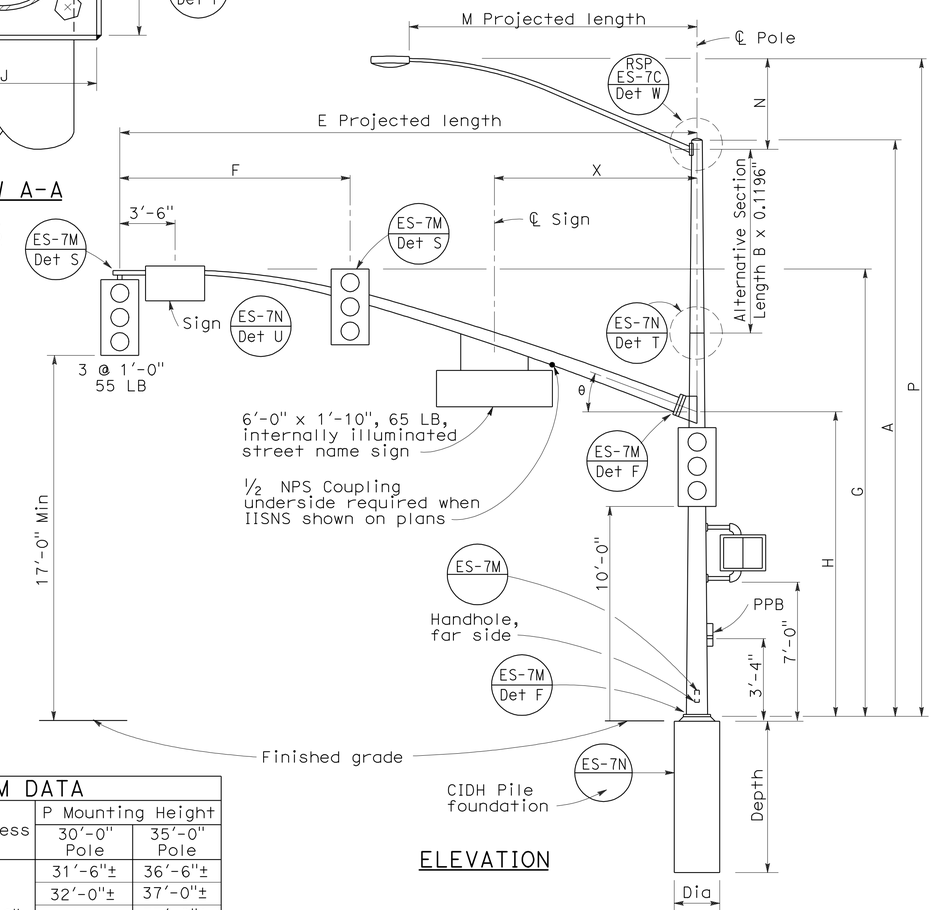

ELEVATION

TYPE 19-4-100, 19A-4-100, 24-4-100, 24A-4-100, 26-4-100, 26A-4-100

SIGNAL ARM DATA												
E Projected Length	F Min Spacing	G Mounting Height	H	Min OD at Pole	Thickness	I Bolt Circle	HS Cap Screws	J Plate Size	K Arm PL Thickness	L Pole PL Thickness	θ	X Max
25'-0"	10'-0"	22'-8"±	16'-0"	7 5/16"	0.2391"	12"	1¼"-7NC-3"	1'-0"	1¼"	1½"	23°	10'-6"
30'-0"	12'-0"	23'-0"±		8"								
35'-0"	14'-0"			8 11/16"		13½"		1'-1½"	1½"	1¾"	21°	
40'-0"	15'-0"			9⅜"							15°	13'-0"
45'-0"		23'-8"±		10¼"								

LUMINAIRE ARM DATA					
M Projected Length	N Rise	Min OD at Pole	Thickness	P Mounting Height 30'-0" Pole	P Mounting Height 35'-0" Pole
6'-0"	2'-0"±	3¼"	0.1196"	31'-6"±	36'-6"±
8'-0"	2'-6"±	3½"		32'-0"±	37'-0"±
10'-0"	3'-3"±	3⅞"		32'-9"±	37'-9"±
12'-0"	4'-3"±			33'-9"±	38'-9"±
15'-0"	4'-9"±	4¼"		34'-3"±	39'-3"±

POLE DATA									BASE PLATE DATA				Luminaire Arm	Signal Arm	CIDH PILE FOUNDATION		
Pole Type	Load Case	Wind Velocity mph	A Height	Min OD Base	Min OD Top	Thickness	Alternative Section B Length	Alternative Section Bottom	Alternative Section Top	C	DI Bolt Circle	Thickness	Anchor Bolts Size			Dia	Depth	Reinforced
18-4-100	4	100	17'-0"	12"	9"	0.2391"	None			1'-6"	1'-6"	1½"	2" Ø x 42" x 6"	None	25'-0", [30'-0"]	3'-0"	9'-0"	Yes
19-4-100			30'-0"		8"		10'-0"	9⅜"	8"					6'-15' [12'-0"]				
19A-4-100			35'-0"		7 5/16"		15'-0'		7 5/16"					6'-15' [15'-0"]				
23-4-100			17'-0"		9"		None							None	35'-0"			
24-4-100			30'-0"		8"		10'-0"	9⅜"	8"					6'-15' [12'-0"]				
24A-4-100			35'-0"		7 5/16"		15'-0"		7 5/16"					6'-15' [15'-0"]				
26-4-100			30'-0"	12½"	8"	0.3125"	10'-0"	9¾"	8⅜"					6'-15' [12'-0"]	40'-0", [45'-0"]			
26A-4-100			35'-0"		7 5/16"		15'-0"		7 11/16"					6'-15' [15'-0"]				
27-4-100			17'-0"		9¾"		None							None				

☐ Indicates arm length to be used unless otherwise noted on plans.

STATE OF CALIFORNIA
DEPARTMENT OF TRANSPORTATION

ELECTRICAL SYSTEMS (SIGNAL AND LIGHTING STANDARD CASE 4 ARM LOADING WIND VELOCITY=100 MPH ARM LENGTHS 25' TO 45')

NO SCALE

RSP ES-7F DATED OCTOBER 5, 2007 SUPERCEDES RSP ES-7F DATED NOVEMBER 17, 2006 AND STANDARD PLAN ES-7F DATED MAY 1, 2006 - PAGE 442 OF THE STANDARD PLANS BOOK DATED MAY 2006.

REVISED STANDARD PLAN RSP ES-7F

2006 REVISED STANDARD PLAN RSP ES-7F

7-10-07