Dist	COUNTY	ROUTE	POST MILES TOTAL PROJECT	SHEET No.	TOTAL SHEETS
12	Ora	57	20.1/21.8	1	48

HSNH-P057(056)E

STATE OF CALIFORNIA
DEPARTMENT OF TRANSPORTATION

PROJECT PLANS FOR CONSTRUCTION ON
STATE HIGHWAY
IN ORANGE COUNTY
IN BREA
FROM IMPERIAL HIGHWAY OVERCROSSING
TO 0.07 MILE SOUTH OF TONNER CANYON ROAD

TO BE SUPPLEMENTED BY STANDARD PLANS DATED MAY 2006

INDEX OF PLANS

SHEET No.	DESCRIPTION
1	TITLE AND LOCATION MAP
2	TYPICAL CROSS SECTIONS
3-10	LAYOUTS
11-12	CONSTRUCTION DETAILS
13-16	TRAFFIC HANDLING PLANS, DETAILS AND QUANTITIES
17	CONSTRUCTION AREA SIGNS
18-29	PAVEMENT DELINEATION PLANS, DETAILS AND QUANTITIES
30	SUMMARY OF QUANTITIES
31	SIGN QUANTITIES
32-37	ELECTRICAL PLANS
35-45	REVISED AND NEW STANDARD PLANS

STRUCTURE PLANS

46-48	Rte 57 VARIOUS LOCATIONS

THE STANDARD PLANS LIST APPLICABLE TO THIS CONTRACT IS INCLUDED IN THE NOTICE TO BIDDERS AND SPECIAL PROVISIONS BOOK.

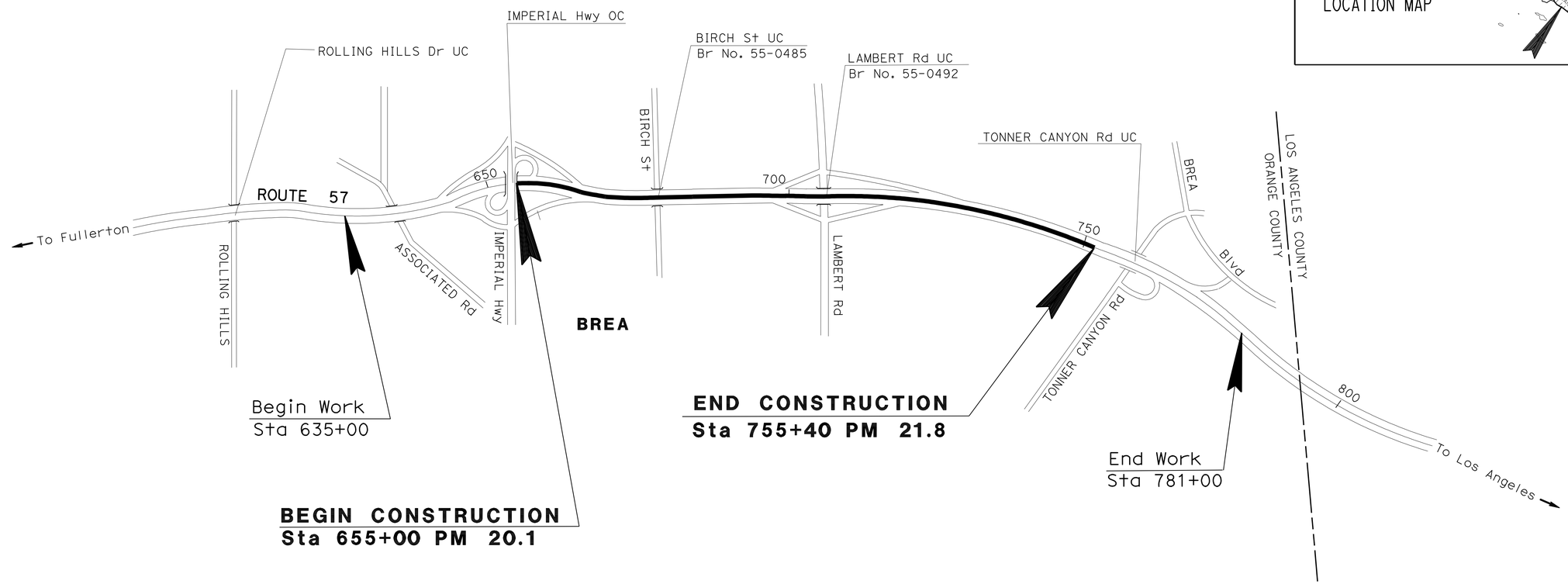

NO SCALE

THE CONTRACTOR SHALL POSSESS THE CLASS (OR CLASSES) OF LICENSE AS SPECIFIED IN THE "NOTICE TO BIDDERS."

PROJECT MANAGER: PIJA ANSARI

DESIGN ENGINEER: MILI LIM STAMATION

Nam Tu Dao 06-02-10
PROJECT ENGINEER REGISTERED CIVIL ENGINEER — DATE

REGISTERED PROFESSIONAL ENGINEER — NAM TU DAO — No. C 30349 — Exp. 3/31/12 — CIVIL — STATE OF CALIFORNIA

July 6, 2010
PLANS APPROVAL DATE

THE STATE OF CALIFORNIA OR ITS OFFICERS OR AGENTS SHALL NOT BE RESPONSIBLE FOR THE ACCURACY OR COMPLETENESS OF ELECTRONIC COPIES OF THIS PLAN SHEET.

CONTRACT No.	12-0K5404
PROJECT ID	1200000355

LAST REVISION 05-11-10

DATE PLOTTED => 15-SEP-2010
TIME PLOTTED => 05:58

Dist	COUNTY	ROUTE	POST MILES TOTAL PROJECT	SHEET No.	TOTAL SHEETS
12	Ora	57	20.1/21.8	2	48

Nam Tu Dao 06-02-10
REGISTERED CIVIL ENGINEER DATE

7-6-10
PLANS APPROVAL DATE

REGISTERED PROFESSIONAL ENGINEER NAM TU DAO No. C 30349 Exp. 3/31/12 CIVIL STATE OF CALIFORNIA

THE STATE OF CALIFORNIA OR ITS OFFICERS OR AGENTS SHALL NOT BE RESPONSIBLE FOR THE ACCURACY OR COMPLETENESS OF SCANNED COPIES OF THIS PLAN SHEET.

NOTES:

1. DIMENSIONSS OF THE STRUCTURAL SECTIONS ARE SUBJECT TO TOLERANCES SPECIIFIED IN THE STANDARD SPECIFICATIONS.
2. SUPERELEVATIONS AS SHOWN OR AS DIRECTED BY THE ENGINEER.

ABBREVIATIONS

HMA (OG) = Hot Mix Asphalt (Open Graded)

STRUCTURAL SECTIONS

1 - GRIND AND GROOVE EXIST CONCRETE PAVEMENT

2 - OVERLAY WITH 0.1′ HMA (OG)

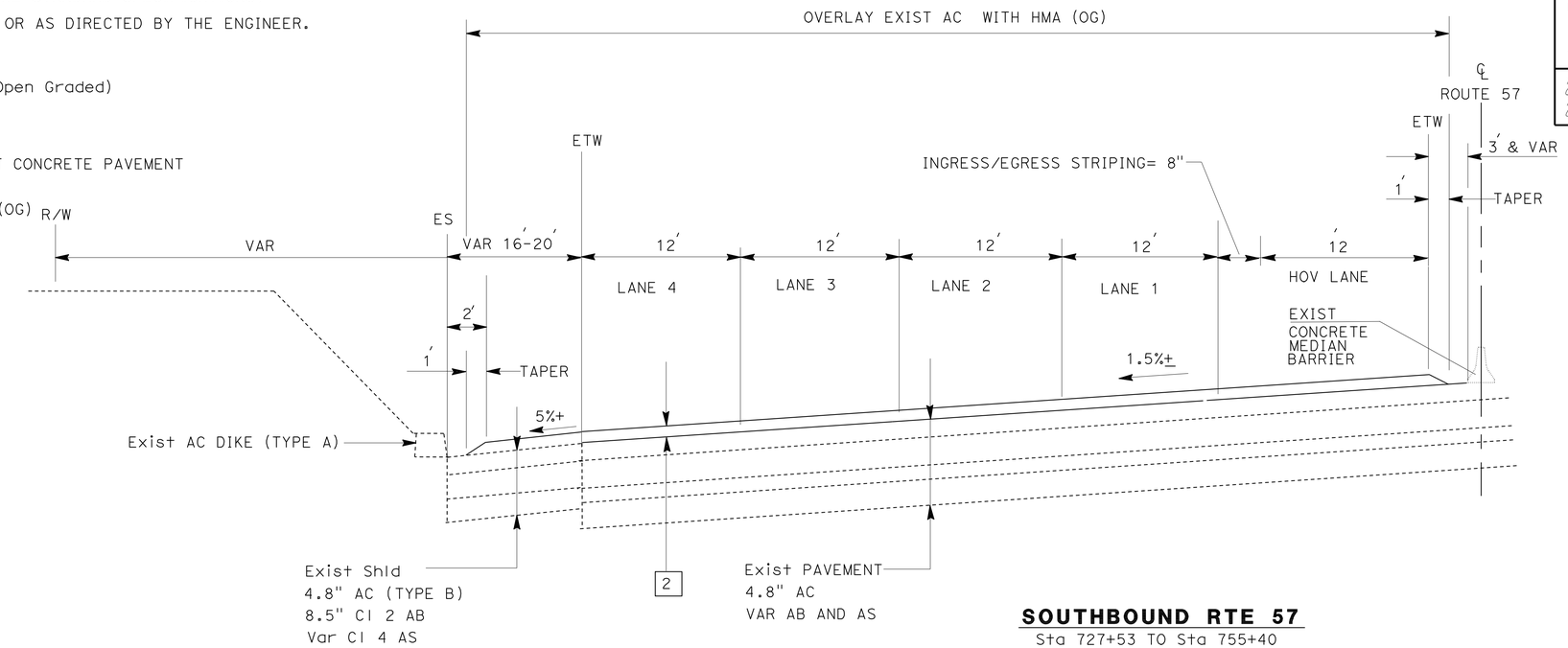

SOUTHBOUND RTE 57
Sta 727+53 TO Sta 755+40

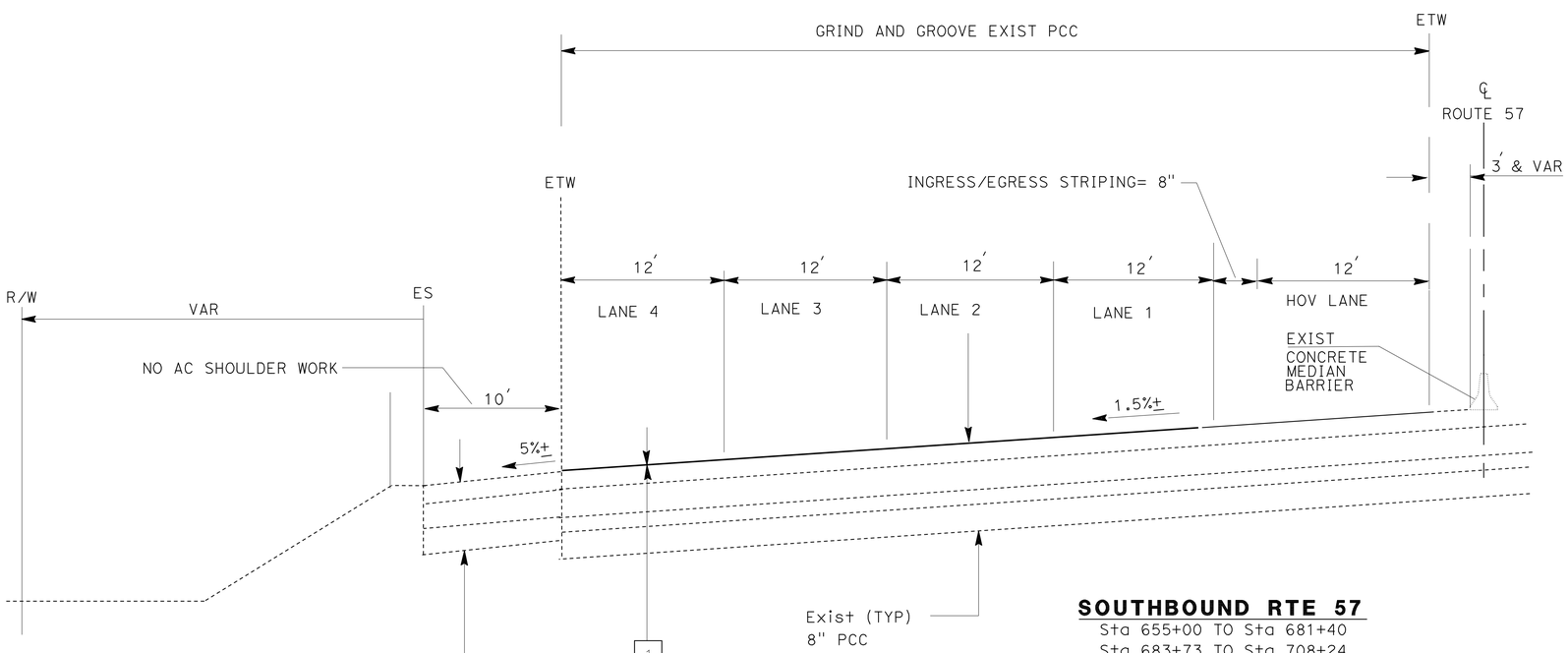

SOUTHBOUND RTE 57
Sta 655+00 TO Sta 681+40
Sta 683+73 TO Sta 708+24
Sta 710+61 TO Sta 727+53

TYPICAL CROSS SECTIONS

NO SCALE

X-1

REVISED BY	DATE REVISED
NAM TU DAO	05-19-10

CALCULATED-DESIGNED BY	CHECKED BY
RAMPHA REAO	NAM TU DAO

FUNCTIONAL SUPERVISOR: MILI LIM STAMATION

STATE OF CALIFORNIA - DEPARTMENT OF TRANSPORTATION
Caltrans DESIGN DIVISION

LAST REVISION 06-02-10
DATE PLOTTED => 08-JUL-2010
TIME PLOTTED => 13:51

Dist	COUNTY	ROUTE	POST MILES TOTAL PROJECT	SHEET No.	TOTAL SHEETS
12	Ora	57	20.1/21.8	3	48

Nam Tu Dao 06-29-10
REGISTERED CIVIL ENGINEER DATE

7-6-10
PLANS APPROVAL DATE

REGISTERED PROFESSIONAL ENGINEER
NAM TU DAO
No. C 30349
Exp. 3/31/12
CIVIL
STATE OF CALIFORNIA

THE STATE OF CALIFORNIA OR ITS OFFICERS OR AGENTS SHALL NOT BE RESPONSIBLE FOR THE ACCURACY OR COMPLETENESS OF SCANNED COPIES OF THIS PLAN SHEET.

NOTES:

1. FOR COMPLETE RIGHT OF WAY AND ACCURATE ACCESS DATA, SEE RIGHT OF WAY RECORD MAPS AT DISTRICT OFFICE.
2. EXISTING UTILITY FACILITIES HAVE NOT BEEN PLOTTED ON THESE PLANS.

LEGEND:

[1] STRUCTURAL SECTION No.

(2) CURVE DATA

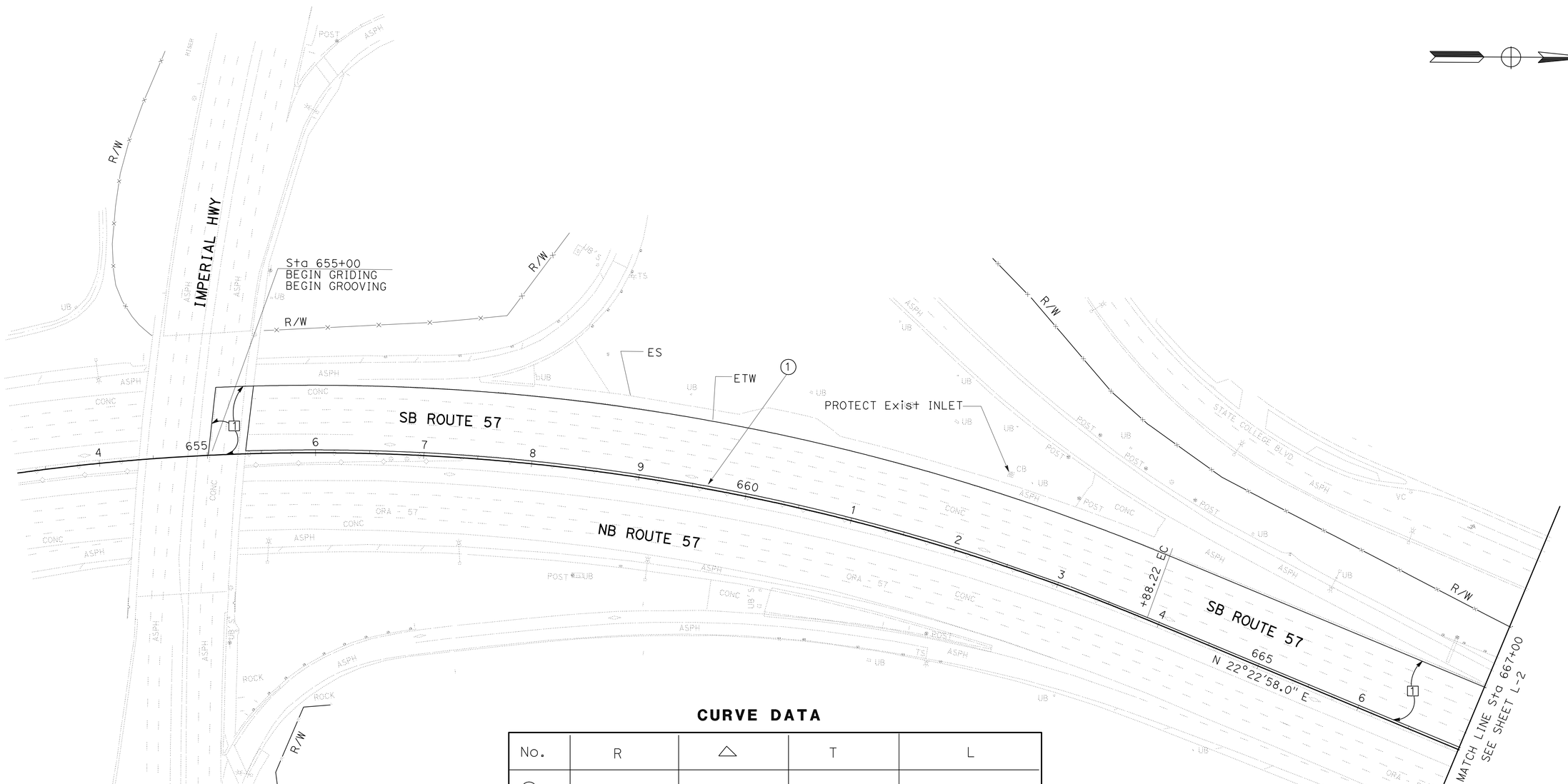

CURVE DATA

No.	R	△	T	L
(1)	2000.00′	40°30′03″	922.03′	1727.90′

LAYOUT

SCALE: 1" = 50′

L-1

REVISED BY	NAM TU DAO
DATE REVISED	05-19-10
CALCULATED-DESIGNED BY	RAMPHA REAO
CHECKED BY	NAM TU DAO
FUNCTIONAL SUPERVISOR	MILI LIM STAMATION

STATE OF CALIFORNIA - DEPARTMENT OF TRANSPORTATION
Caltrans® DESIGN DIVISION

LAST REVISION 06-28-10 | DATE PLOTTED => 08-JUL-2010 | TIME PLOTTED => 13:52

Dist	COUNTY	ROUTE	POST MILES TOTAL PROJECT	SHEET No.	TOTAL SHEETS
12	Ora	57	20.1/21.8	4	48

Nam Tu Dao 06-29-10
REGISTERED CIVIL ENGINEER DATE

7-6-10
PLANS APPROVAL DATE

REGISTERED PROFESSIONAL ENGINEER
NAM TU DAO
No. C 30349
Exp. 3/31/12
CIVIL
STATE OF CALIFORNIA

THE STATE OF CALIFORNIA OR ITS OFFICERS OR AGENTS SHALL NOT BE RESPONSIBLE FOR THE ACCURACY OR COMPLETENESS OF SCANNED COPIES OF THIS PLAN SHEET.

NOTES:

1. FOR COMPLETE RIGHT OF WAY AND ACCURATE ACCESS DATA, SEE RIGHT OF WAY RECORD MAPS AT DISTRICT OFFICE.
2. EXISTING UTILITY FACILITIES HAVE NOT BEEN PLOTTED ON THESE PLANS.

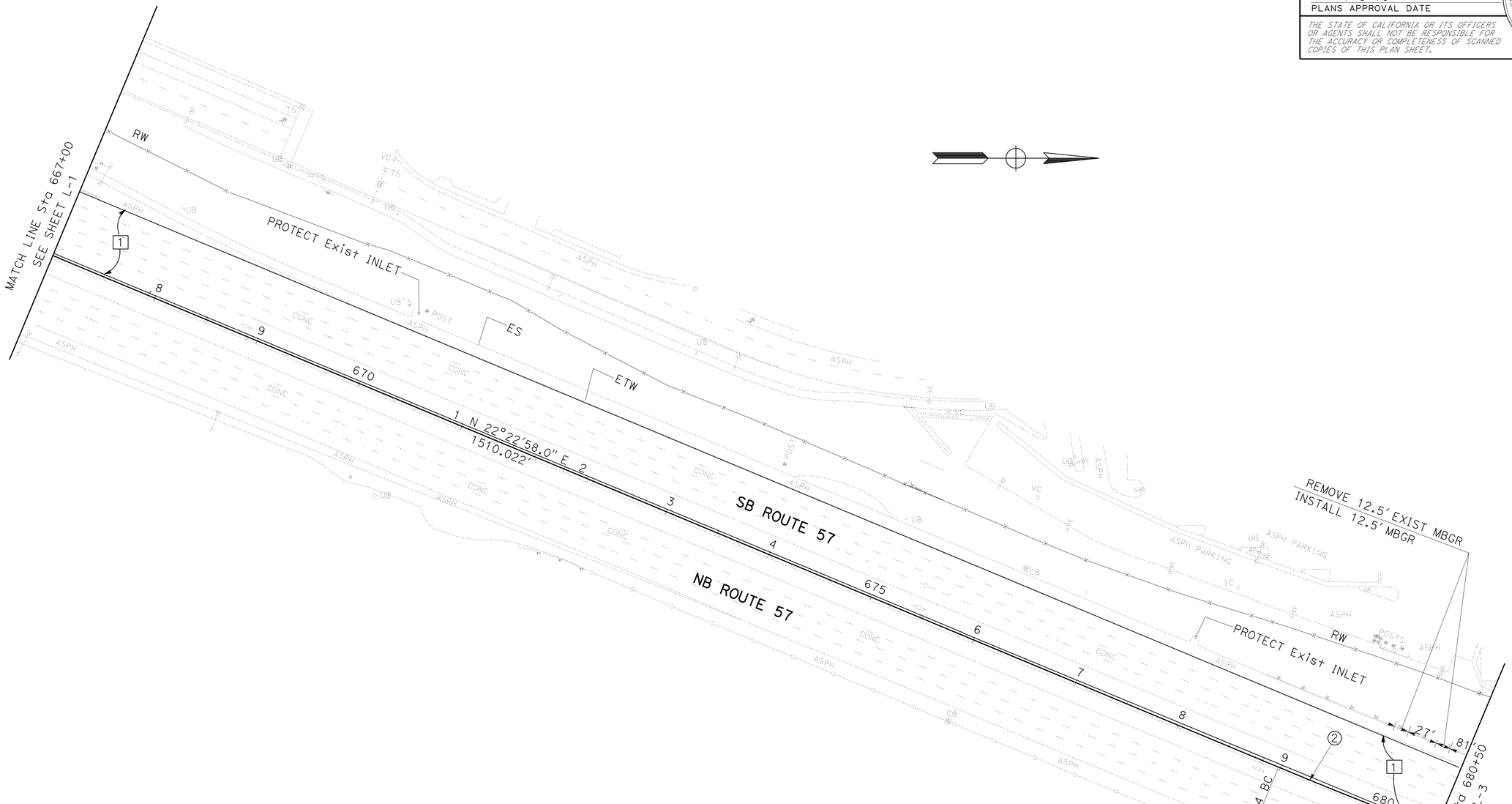

CURVE DATA

No.	R	△	T	L
②	5000.00′	21°18′33"	940.66′	1859.58′

LAYOUT

SCALE: 1" = 50′

L-2

STATE OF CALIFORNIA - DEPARTMENT OF TRANSPORTATION
Caltrans® DESIGN DIVISION

FUNCTIONAL SUPERVISOR: MILI LIM STAMATION
CALCULATED-DESIGNED BY: RAMPHA REAO
CHECKED BY: NAM TU DAO
REVISED BY: NAM TU DAO
DATE REVISED: 05-19-10

LAST REVISION 06-28-10
DATE PLOTTED => 08-JUL-2010
TIME PLOTTED => 13:52

Dist	COUNTY	ROUTE	POST MILES TOTAL PROJECT	SHEET No.	TOTAL SHEETS
12	Ora	57	20.1/21.8	5	48

Nam Tu Dao 06-29-10
REGISTERED CIVIL ENGINEER DATE

7-6-10
PLANS APPROVAL DATE

REGISTERED PROFESSIONAL ENGINEER
NAM TU DAO
No. C 30349
Exp. 3/31/12
CIVIL
STATE OF CALIFORNIA

THE STATE OF CALIFORNIA OR ITS OFFICERS OR AGENTS SHALL NOT BE RESPONSIBLE FOR THE ACCURACY OR COMPLETENESS OF SCANNED COPIES OF THIS PLAN SHEET.

NOTES:

1. FOR COMPLETE RIGHT OF WAY AND ACCURATE ACCESS DATA, SEE RIGHT OF WAY RECORD MAPS AT DISTRICT OFFICE.
2. EXISTING UTILITY FACILITIES HAVE NOT BEEN PLOTTED ON THESE PLANS.

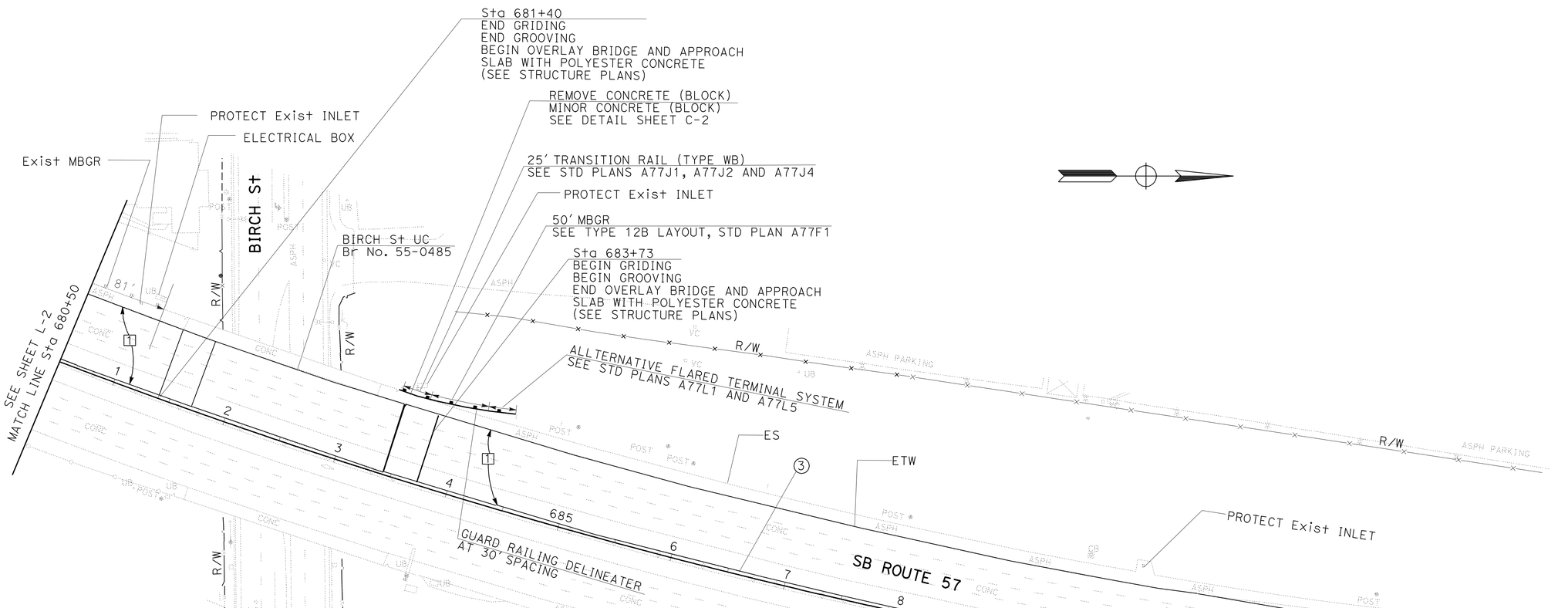

CURVE DATA

No.	R	△	T	L
3	5000.00'	21°18'33"	940.66'	1859.58'

LAYOUT

SCALE: 1" = 50'

L-3

REVISED BY	DATE REVISED
NAM TU DAO	05-19-10

RAMPHA REAO — NAM TU DAO

CALCULATED-DESIGNED BY — CHECKED BY

FUNCTIONAL SUPERVISOR — MILI LIM STAMATION

STATE OF CALIFORNIA - DEPARTMENT OF TRANSPORTATION
Caltrans® DESIGN DIVISION

LAST REVISION 06-28-10 — DATE PLOTTED => 08-JUL-2010 — TIME PLOTTED => 17:44

Dist	COUNTY	ROUTE	POST MILES TOTAL PROJECT	SHEET No.	TOTAL SHEETS
12	Ora	57	20.1/21.8	6	48

Nam Tu Dao 06-29-10
REGISTERED CIVIL ENGINEER DATE

7-6-10
PLANS APPROVAL DATE

REGISTERED PROFESSIONAL ENGINEER
NAM TU DAO
No. C 30349
Exp. 3/31/12
CIVIL
STATE OF CALIFORNIA

THE STATE OF CALIFORNIA OR ITS OFFICERS OR AGENTS SHALL NOT BE RESPONSIBLE FOR THE ACCURACY OR COMPLETENESS OF SCANNED COPIES OF THIS PLAN SHEET.

NOTES:

1. FOR COMPLETE RIGHT OF WAY AND ACCURATE ACCESS DATA, SEE RIGHT OF WAY RECORD MAPS AT DISTRICT OFFICE.
2. EXISTING UTILITY FACILITIES HAVE NOT BEEN PLOTTED ON THESE PLANS.

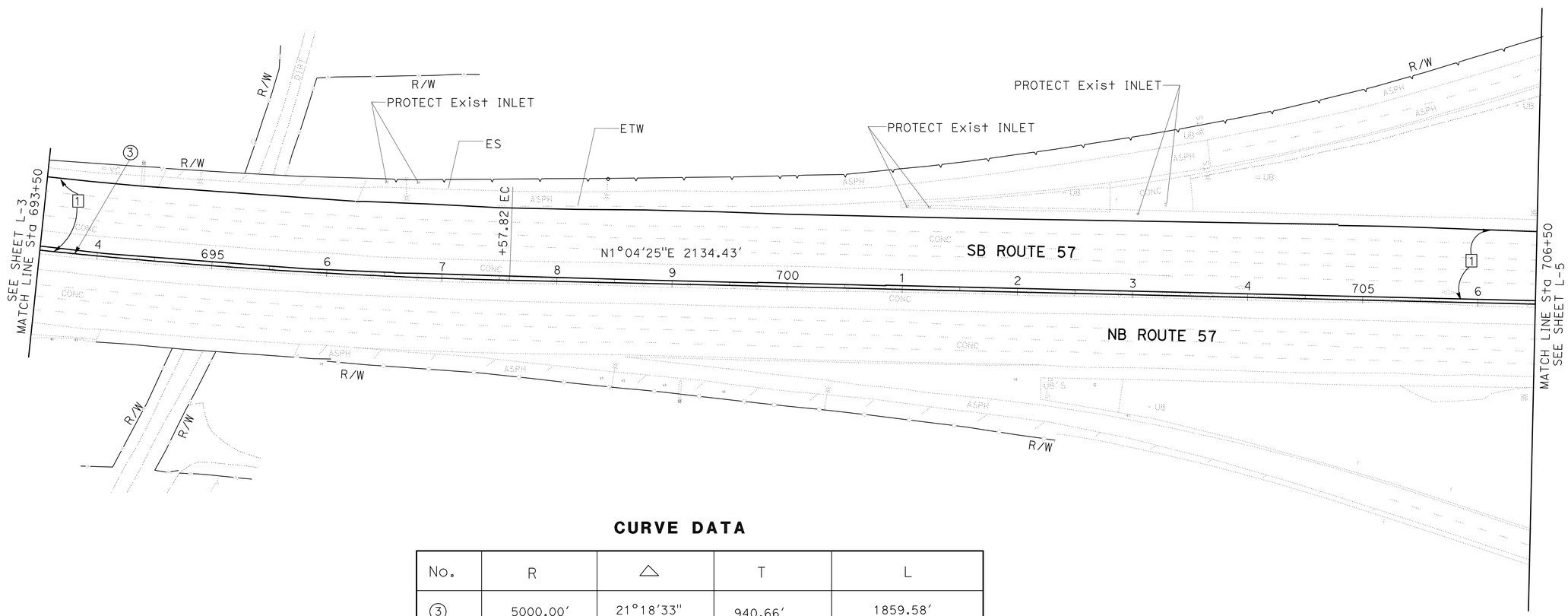

CURVE DATA

No.	R	△	T	L
3	5000.00′	21°18′33"	940.66′	1859.58′

LAYOUT

SCALE: 1" = 50′

L-4

STATE OF CALIFORNIA - DEPARTMENT OF TRANSPORTATION
Caltrans® DESIGN DIVISION

FUNCTIONAL SUPERVISOR: MILI LIM STAMATION
CALCULATED-DESIGNED BY: RAMPHA REAO
CHECKED BY: NAM TU DAO
REVISED BY: NAM TU DAO
DATE REVISED: 05-03-10

LAST REVISION 06-28-10 | DATE PLOTTED => 08-JUL-2010 | TIME PLOTTED => 17:44

BORDER LAST REVISED 4/11/2008 | RELATIVE BORDER SCALE IS IN INCHES 0 1 2 3 | USERNAME => trlim | DGN FILE => c0k540ea004.dgn | CU 12220 | EA 0K5401

Dist	COUNTY	ROUTE	POST MILES TOTAL PROJECT	SHEET No.	TOTAL SHEETS
12	Ora	57	20.1/21.8	7	48

Nam Tu Dao 06-29-10
REGISTERED CIVIL ENGINEER DATE

7-6-10
PLANS APPROVAL DATE

REGISTERED PROFESSIONAL ENGINEER
NAM TU DAO
No. C 30349
Exp. 3/31/12
CIVIL
STATE OF CALIFORNIA

THE STATE OF CALIFORNIA OR ITS OFFICERS OR AGENTS SHALL NOT BE RESPONSIBLE FOR THE ACCURACY OR COMPLETENESS OF SCANNED COPIES OF THIS PLAN SHEET.

NOTES:

1. FOR COMPLETE RIGHT OF WAY AND ACCURATE ACCESS DATA, SEE RIGHT OF WAY RECORD MAPS AT DISTRICT OFFICE.
2. EXISTING UTILITY FACILITIES HAVE NOT BEEN PLOTTED ON THESE PLANS.

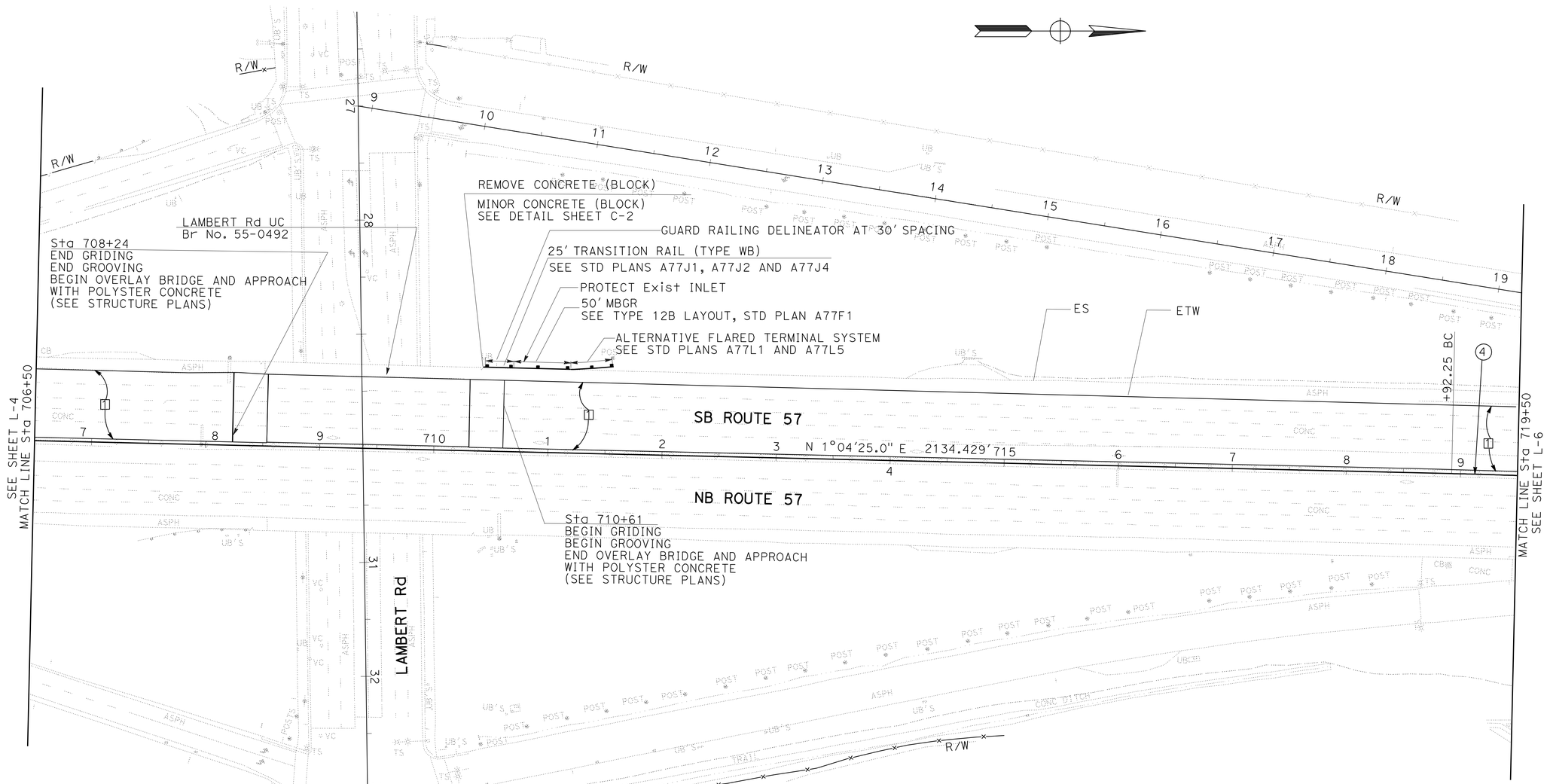

CURVE DATA

No.	R	△	T	L
4	5000.00'	15°27'26"	678.57	1348.90

LAYOUT

SCALE: 1" = 50'

L-5

REVISED BY	DATE REVISED
NAM TU DAO	05-19-10

CALCULATED-DESIGNED BY: RAMPHA REAO
CHECKED BY: NAM TU DAO
FUNCTIONAL SUPERVISOR: MILI LIM STAMATION

STATE OF CALIFORNIA - DEPARTMENT OF TRANSPORTATION
Caltrans® DESIGN DIVISION

LAST REVISION 06-28-10 | DATE PLOTTED => 08-JUL-2010 | TIME PLOTTED => 17:44

Dist	COUNTY	ROUTE	POST MILES TOTAL PROJECT	SHEET No.	TOTAL SHEETS
12	Ora	57	20.1/21.8	8	48

Nam Tu Dao 06-29-10
REGISTERED CIVIL ENGINEER DATE

7-6-10
PLANS APPROVAL DATE

REGISTERED PROFESSIONAL ENGINEER
NAM TU DAO
No. C 30349
Exp. 3/31/12
CIVIL
STATE OF CALIFORNIA

THE STATE OF CALIFORNIA OR ITS OFFICERS OR AGENTS SHALL NOT BE RESPONSIBLE FOR THE ACCURACY OR COMPLETENESS OF SCANNED COPIES OF THIS PLAN SHEET.

NOTES:

1. FOR COMPLETE RIGHT OF WAY AND ACCURATE ACCESS DATA, SEE RIGHT OF WAY RECORD MAPS AT DISTRICT OFFICE.
2. EXISTING UTILITY FACILITIES HAVE NOT BEEN PLOTTED ON THESE PLANS.

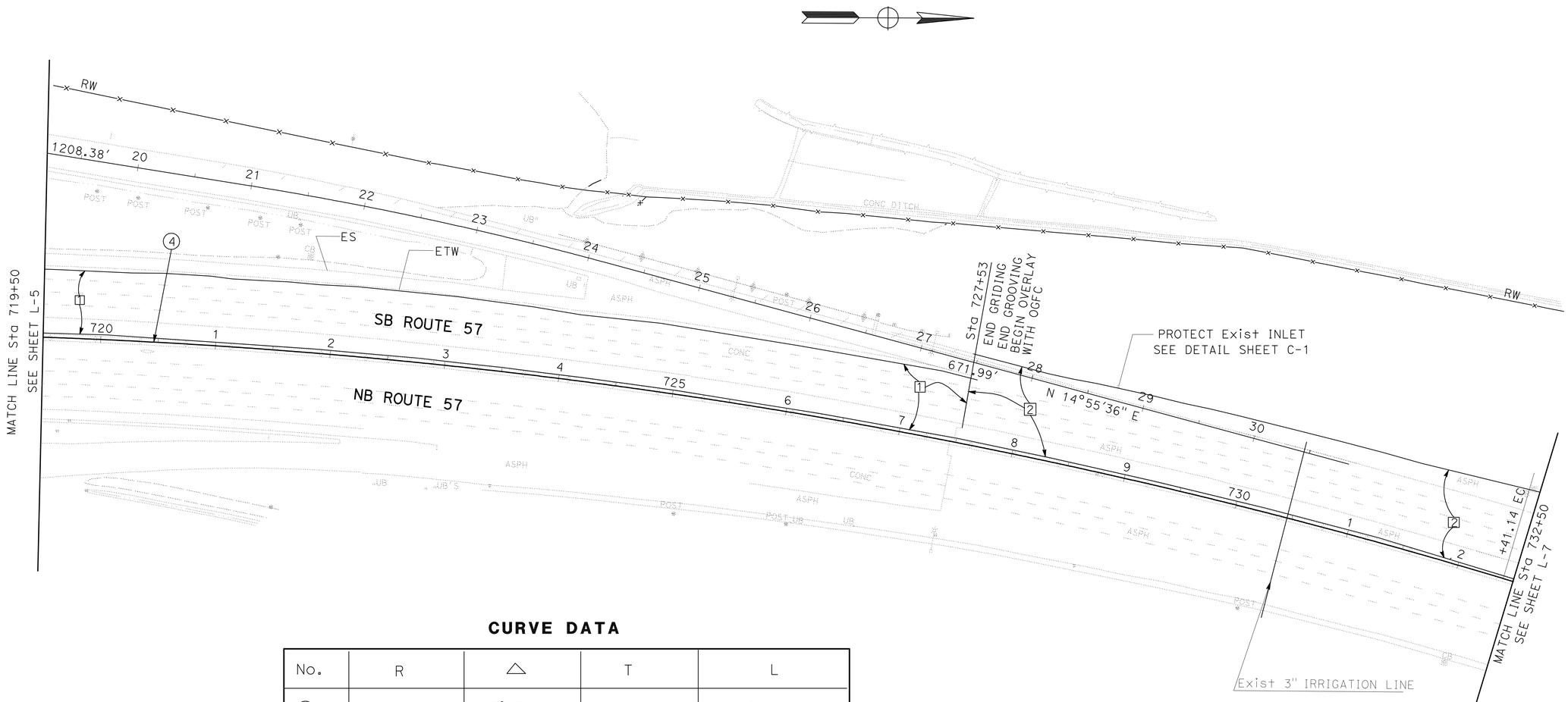

CURVE DATA

No.	R	△	T	L
4	5000.00'	15°27'26"	678.57	1348.90

LAYOUT

SCALE: 1" = 50'

L-6

REVISED BY	DATE REVISED
NAM TU DAO	05-04-10

RAMPHA REAO — NAM TU DAO

CALCULATED-DESIGNED BY — CHECKED BY

FUNCTIONAL SUPERVISOR — MILI LIM STAMATION

STATE OF CALIFORNIA - DEPARTMENT OF TRANSPORTATION
Caltrans DESIGN DIVISION

LAST REVISION 06-29-10 | DATE PLOTTED => 08-JUL-2010 | TIME PLOTTED => 13:41

Dist	COUNTY	ROUTE	POST MILES TOTAL PROJECT	SHEET No.	TOTAL SHEETS
12	Ora	57	20.1/21.8	9	48

REGISTERED CIVIL ENGINEER 06-29-10 DATE

7-6-10
PLANS APPROVAL DATE

REGISTERED PROFESSIONAL ENGINEER NAM TU DAO No. C 30349 Exp. 3/31/12 CIVIL STATE OF CALIFORNIA

THE STATE OF CALIFORNIA OR ITS OFFICERS OR AGENTS SHALL NOT BE RESPONSIBLE FOR THE ACCURACY OR COMPLETENESS OF SCANNED COPIES OF THIS PLAN SHEET.

NOTES:

1. FOR COMPLETE RIGHT OF WAY AND ACCURATE ACCESS DATA, SEE RIGHT OF WAY RECORD MAPS AT DISTRICT OFFICE.
2. EXISTING UTILITY FACILITIES HAVE NOT BEEN PLOTTED ON THESE PLANS.

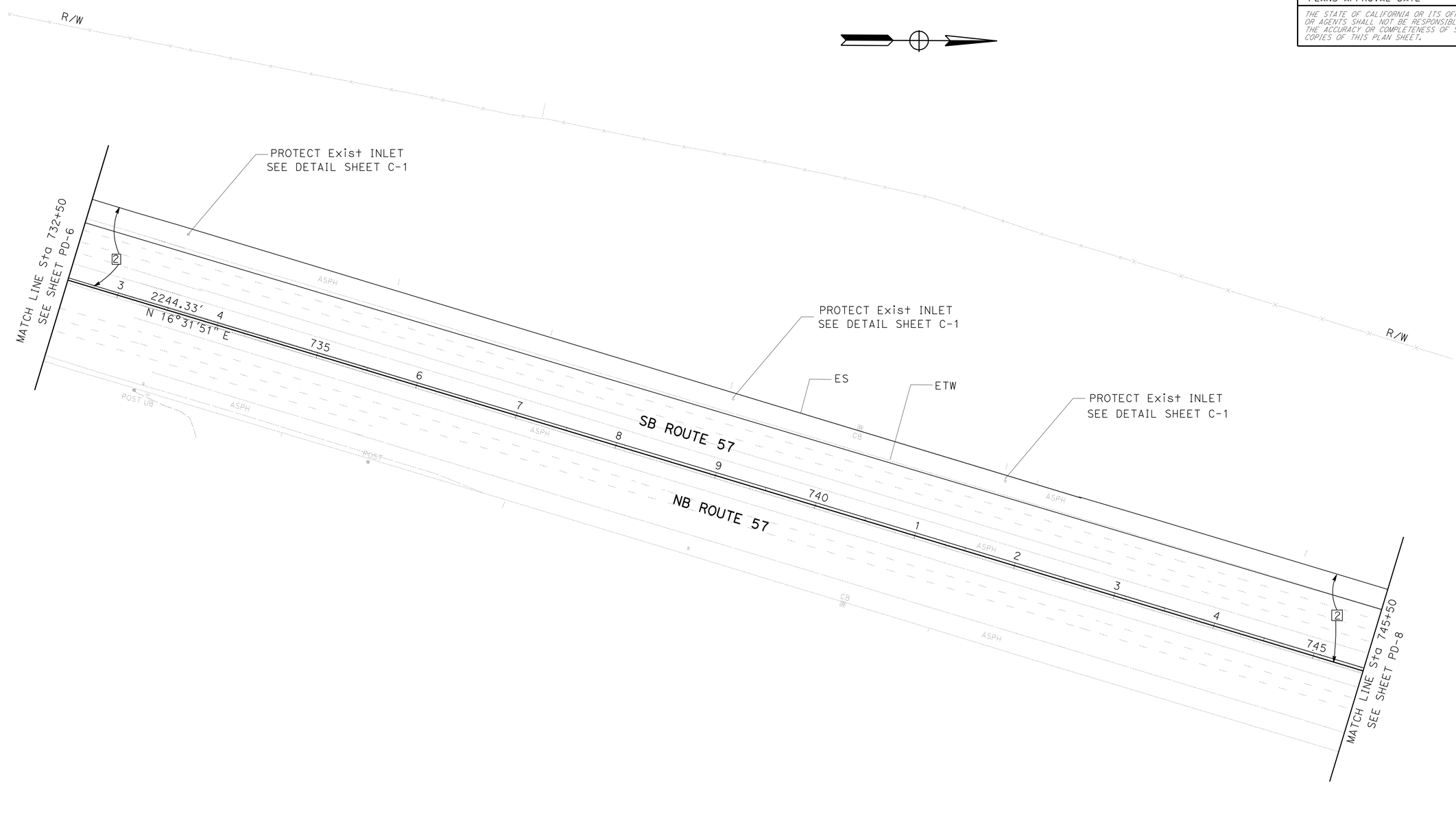

LAYOUT

SCALE: 1" = 50'

L-7

STATE OF CALIFORNIA - DEPARTMENT OF TRANSPORTATION	FUNCTIONAL SUPERVISOR	CALCULATED-DESIGNED BY	RAMPHA REAO	REVISED BY	NAM TU DAO
Caltrans® DESIGN DIVISION	MILI LIM STAMATION	CHECKED BY	NAM TU DAO	DATE REVISED	05-04-10

LAST REVISION 06-28-10 | DATE PLOTTED => 08-JUL-2010 | TIME PLOTTED => 13:41

Dist	COUNTY	ROUTE	POST MILES TOTAL PROJECT	SHEET No.	TOTAL SHEETS
12	Ora	57	20.1/21.8	10	48

REGISTERED CIVIL ENGINEER 06-29-10 DATE

7-6-10
PLANS APPROVAL DATE

REGISTERED PROFESSIONAL ENGINEER NAM TU DAO No. C 30349 Exp. 3/31/12 CIVIL STATE OF CALIFORNIA

THE STATE OF CALIFORNIA OR ITS OFFICERS OR AGENTS SHALL NOT BE RESPONSIBLE FOR THE ACCURACY OR COMPLETENESS OF SCANNED COPIES OF THIS PLAN SHEET.

NOTES:

1. FOR COMPLETE RIGHT OF WAY AND ACCURATE ACCESS DATA, SEE RIGHT OF WAY RECORD MAPS AT DISTRICT OFFICE.
2. EXISTING UTILITY FACILITIES HAVE NOT BEEN PLOTTED ON THESE PLANS.

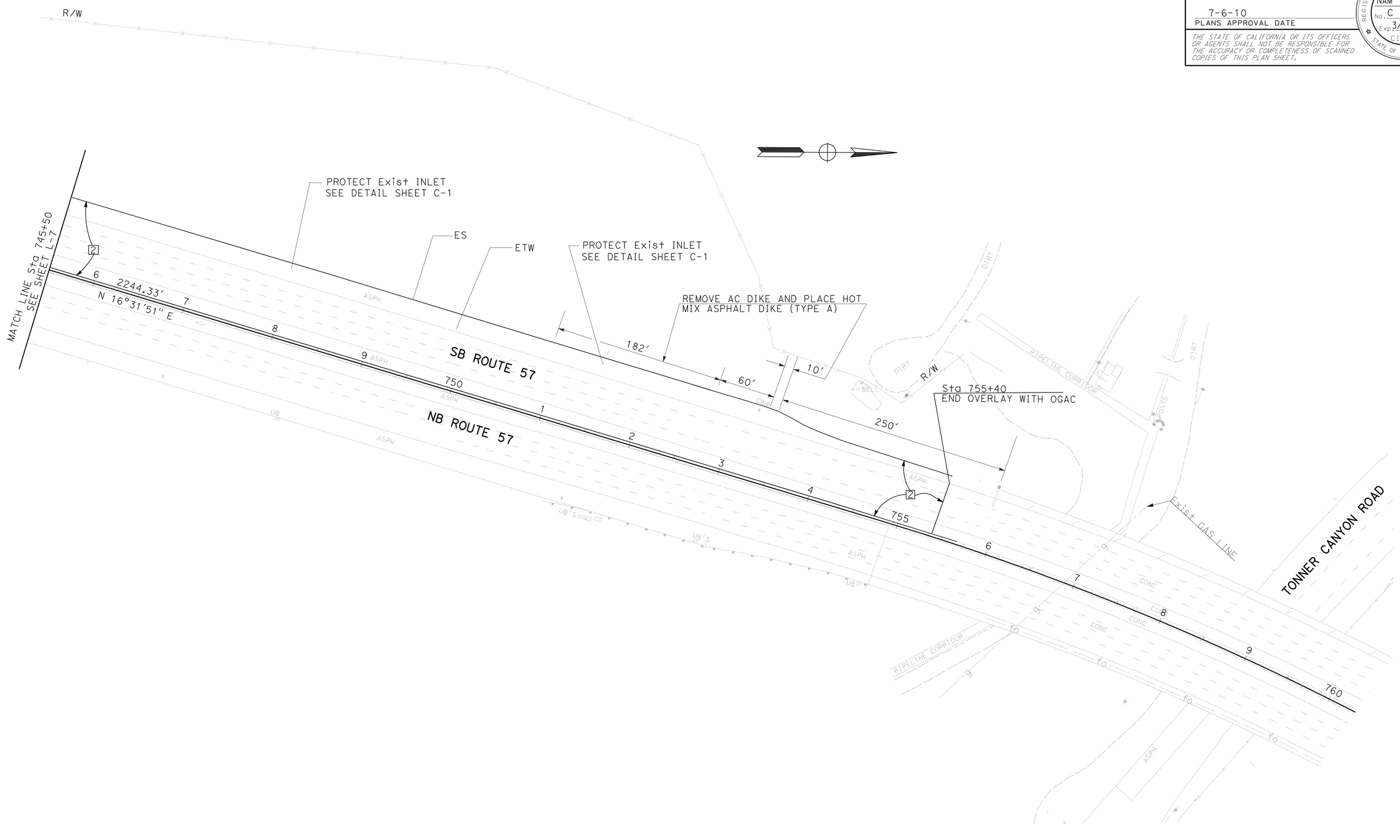

LAYOUT

SCALE: 1" = 50'

L-8

REVISED BY	DATE REVISED
NAM TU DAO	05-04-10

RAMPHA REAO — NAM TU DAO

CALCULATED-DESIGNED BY — CHECKED BY

FUNCTIONAL SUPERVISOR: MILI LIM STAMATION

STATE OF CALIFORNIA - DEPARTMENT OF TRANSPORTATION
Caltrans® DESIGN DIVISION

LAST REVISION 06-29-10 | DATE PLOTTED => 08-JUL-2010 | TIME PLOTTED => 13:41

Dist	COUNTY	ROUTE	POST MILES TOTAL PROJECT	SHEET No.	TOTAL SHEETS
12	Ora	57	20.1/21.8	11	48

REGISTERED CIVIL ENGINEER 06-02-10 DATE

7-6-10
PLANS APPROVAL DATE

REGISTERED PROFESSIONAL ENGINEER NAM TU DAO No. C 30349 Exp. 3/31/12 CIVIL STATE OF CALIFORNIA

THE STATE OF CALIFORNIA OR ITS OFFICERS OR AGENTS SHALL NOT BE RESPONSIBLE FOR THE ACCURACY OR COMPLETENESS OF SCANNED COPIES OF THIS PLAN SHEET.

STRUCTURE SECTION NUMBER

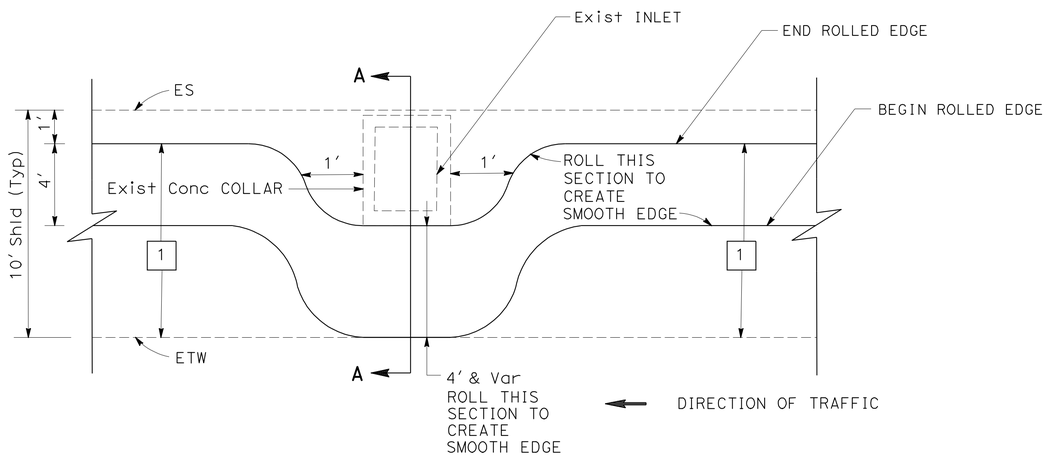

DETAIL A

OVERLAY DETAIL OUTSIDE SHOULDER WITH INLET

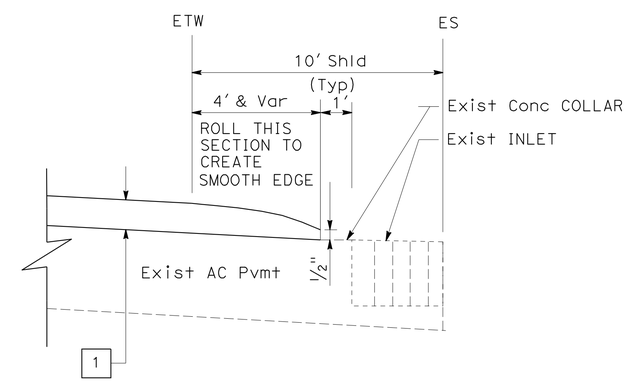

SECTION A-A

CONSTRUCTION DETAILS

NO SCALE

C-1

REVISED BY	NAM TU DAO
DATE REVISED	05-18-10
CALCULATED-DESIGNED BY	RAMPHA REAO
CHECKED BY	NAM TU DAO
FUNCTIONAL SUPERVISOR	MILI LIM STAMATION

STATE OF CALIFORNIA - DEPARTMENT OF TRANSPORTATION
Caltrans DESIGN DIVISION

LAST REVISION 05-25-10 | DATE PLOTTED => 08-JUL-2010 | TIME PLOTTED => 13:41

Dist	COUNTY	ROUTE	POST MILES TOTAL PROJECT	SHEET No.	TOTAL SHEETS
12	Ora	57	20.1/21.8	12	48

Nam Tu Dao 06-02-10
REGISTERED CIVIL ENGINEER DATE

7-6-10
PLANS APPROVAL DATE

REGISTERED PROFESSIONAL ENGINEER NAM TU DAO No. C 30349 Exp. 3/31/12 CIVIL STATE OF CALIFORNIA

THE STATE OF CALIFORNIA OR ITS OFFICERS OR AGENTS SHALL NOT BE RESPONSIBLE FOR THE ACCURACY OR COMPLETENESS OF SCANNED COPIES OF THIS PLAN SHEET.

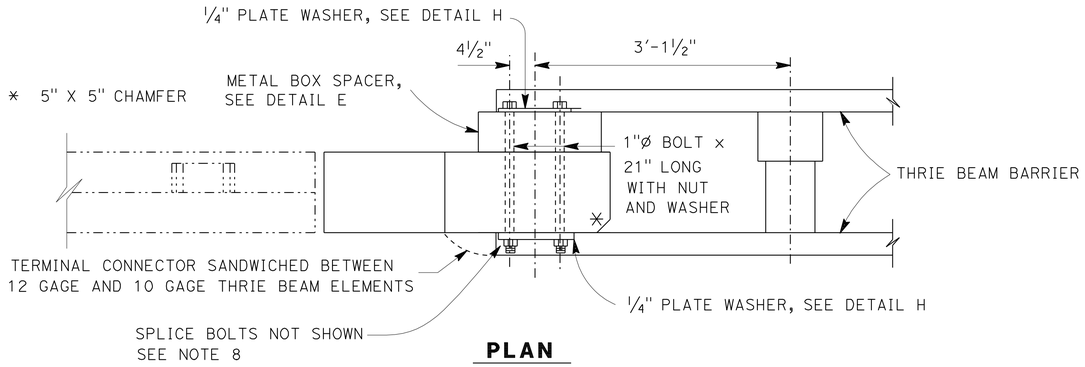

PLAN

NOTES:

1. FOR DETAILS NOT SHOWN, SEE STANDARD PLANS.
2. DEPENDENT DIMENSIONS WILL BE VERIFIED IN THE FIELD BEFORE FABRICATING ANY END CONNECTION TO CONFORM WITH EXISTING PAVED CONDITIONS.
3. WHEN END SECTION IS CALLED FOR, MODIFY TYPICAL TERMINAL SECTION TO FIT. SEE DETAIL E.
4. FOR MBGR CONNECTION, SEE STANDARD PLAN A77J4.
5. ALL PLATES AND BOLTS ARE GALVANIZED.
6. CUT AND REMOVE THAT PORTION OF TYPE 9, AND BAGR AS REQUIRED.
7. IF RAIL IS NOT CONTINUOUS OVER 2 POSTS, USE SPLICE AT EXPANSION JOINT.
8. EXTERIOR SPLICE BOLT HOLES SHALL BE THE STANDARD 7/8" x 1 1/8" SLOT SIZE FOR RAIL SPLICES AT POST # T4 AND THE CONNECTION TO THE RAILING. INTERIOR SPLICE BOLT HOLES MAY BE INCREASED UP TO 1 1/8" Dia. WASHERS SHALL BE USED WITH SPLICE BOLTS ON BACK SIDE OF RAIL ELEMENT AT POST # T4 AND CONNECTION TO THE RAILING.
9. TAPER THE TOP OF THE END OF THE BRIDGE RAILING AT 4:1 TO MATCH THE TOP ELEVATION OF THE MBGR.

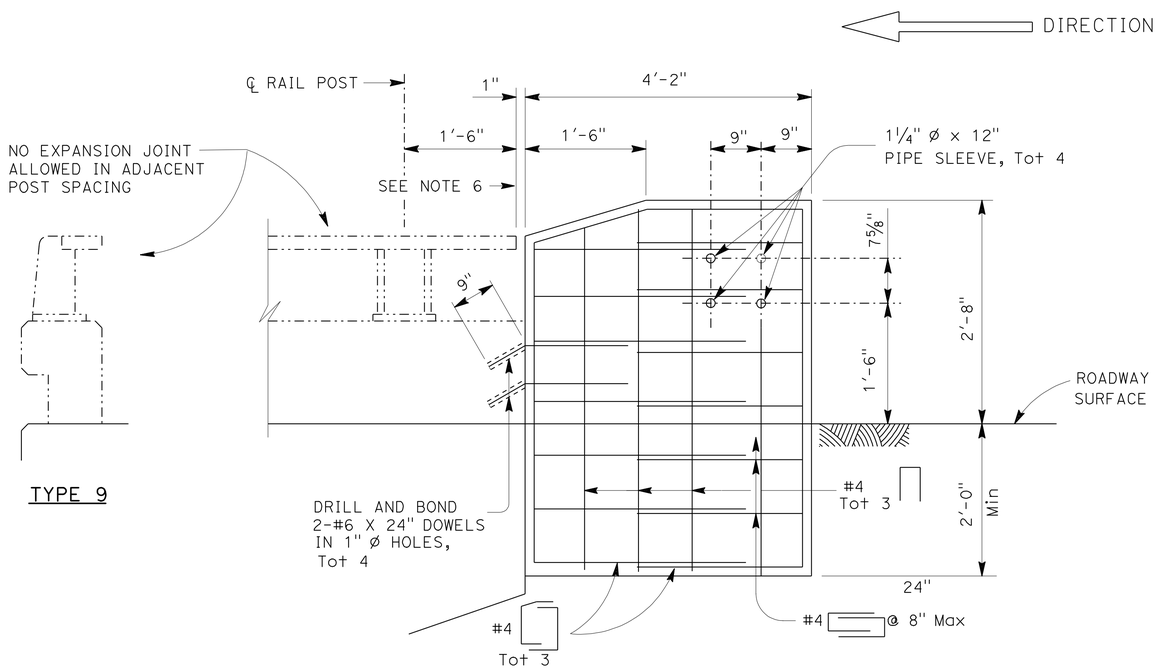

ELEVATION

EXISTING BARRIER RAILING TYPE 9

ALTERNATIVE 1

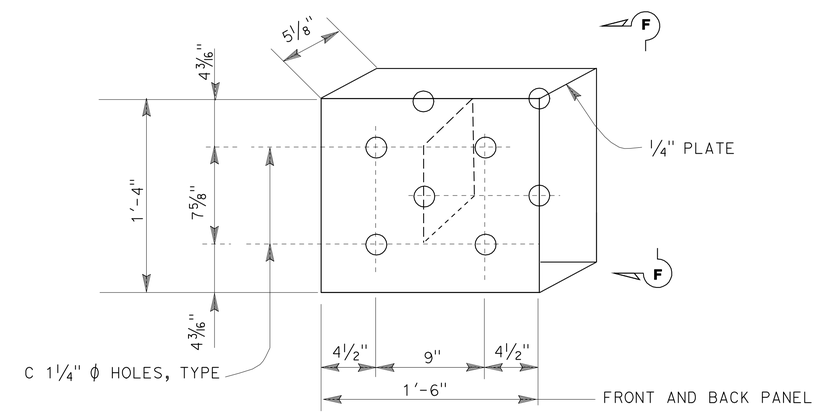

DETAIL E

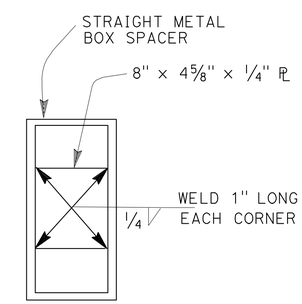

VIEW F-F

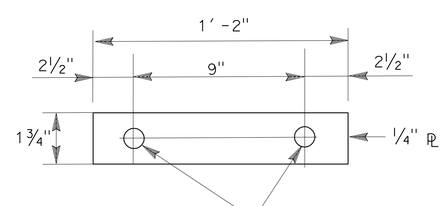

DETAIL H

CONSTRUCTION DETAILS

NO SCALE

C-2

STATE OF CALIFORNIA - DEPARTMENT OF TRANSPORTATION
Caltrans DESIGN DIVISION

FUNCTIONAL SUPERVISOR: MILI LIM STAMATION
CALCULATED-DESIGNED BY: RAMPHA REAO
CHECKED BY: NAM TU DAO
REVISED BY: NAM TU DAO
DATE REVISED: 05-18-10

LAST REVISION 06-02-10
DATE PLOTTED => 08-JUL-2010
TIME PLOTTED => 13:41

Dist	COUNTY	ROUTE	POST MILES TOTAL PROJECT	SHEET No.	TOTAL SHEETS
12	Ora	57	20.1/21.8	13	48

REGISTERED CIVIL ENGINEER 06-29-10 DATE

7-6-10
PLANS APPROVAL DATE

REGISTERED PROFESSIONAL ENGINEER NAM TU DAO No. C 30349 Exp. 3/31/12 CIVIL STATE OF CALIFORNIA

THE STATE OF CALIFORNIA OR ITS OFFICERS OR AGENTS SHALL NOT BE RESPONSIBLE FOR THE ACCURACY OR COMPLETENESS OF SCANNED COPIES OF THIS PLAN SHEET.

NOTE:

EXACT SIGN LOCATIONS TO BE DETERMINED BY THE ENGINEER AND PLACED WITHIN THE STATE R/W.

LEGEND:

- SIGN 1- POST
- (X) CONSTRUCTION DETOUR SIGN
- [X] PORTABLE CHANGEABLE MESSAGE SIGN
- ← DIRECTION OF TRAVEL (DETOUR)

ABBREVIATION:

PCMS PORTABLE CHANGEABLE MESSAGE SIGN

PORTABLE CONSTRUCTION DETOUR SIGNS

SIGN No.	SIGN CODE	SIGN MESSAGE	PANEL SIZE (IN X IN)	No. OF POST AND SIZE (IN X IN)	No. OF SIGNS
1	G28-2(CA)	State Route Marker	21 x 18	1- 4X6	7
	M3-3	SOUTH	21 x 9		
	SC3 (CA)	DETOUR (with arrow)	48 x 18		
2	G28-2(CA)	State Route Marker	21 x 18	1- 4X6	7
	M3-3	SOUTH	21 x 9		
	M4-10 (LT)	Detour Arrow Lt	48 x 18		
3	G28-2(CA)	State Route Marker	21 x 18	1- 4X6	1
	M3-3	SOUTH	21 x 9		
	M4-10 (RT)	Detour Arrow Rt	48 x 18		
4	SC6-4 (CA)	RAMP CLOSED	48 x 30	1- 4X6	6
5	D-3	LAMBERT Rd	48 x 24	1- 4X6	3
	M4-10 (RT)	Detour Arrow Rt	48 x 18		
6	D-3	IMPERIAL Hwy	48 x 24	1- 4X6	3
	SC3 (CA)	DETOUR (with arrow)	48 x 18		
7	D-3	IMPERIAL Hwy	48 x 24	1- 4X6	3
	M4-10 (RT)	Detour Arrow Rt	48 x 18		
8	M4-8a	END DETOUR	30 x 18	1- 4X6	7

PORTABLE CHANGEABLE MESSAGE SIGN

SIGN SYMBOL	SIGN MESSAGE(*)	No. OF SIGNS
[1]	SB 57 ON-RAMP CLOSED AHEAD USE S BREA CANYON Rd DETOUR	3

(*) EXACT MESSAGE ON PCMS TO BE DETERMINED BY THE ENGINEER.

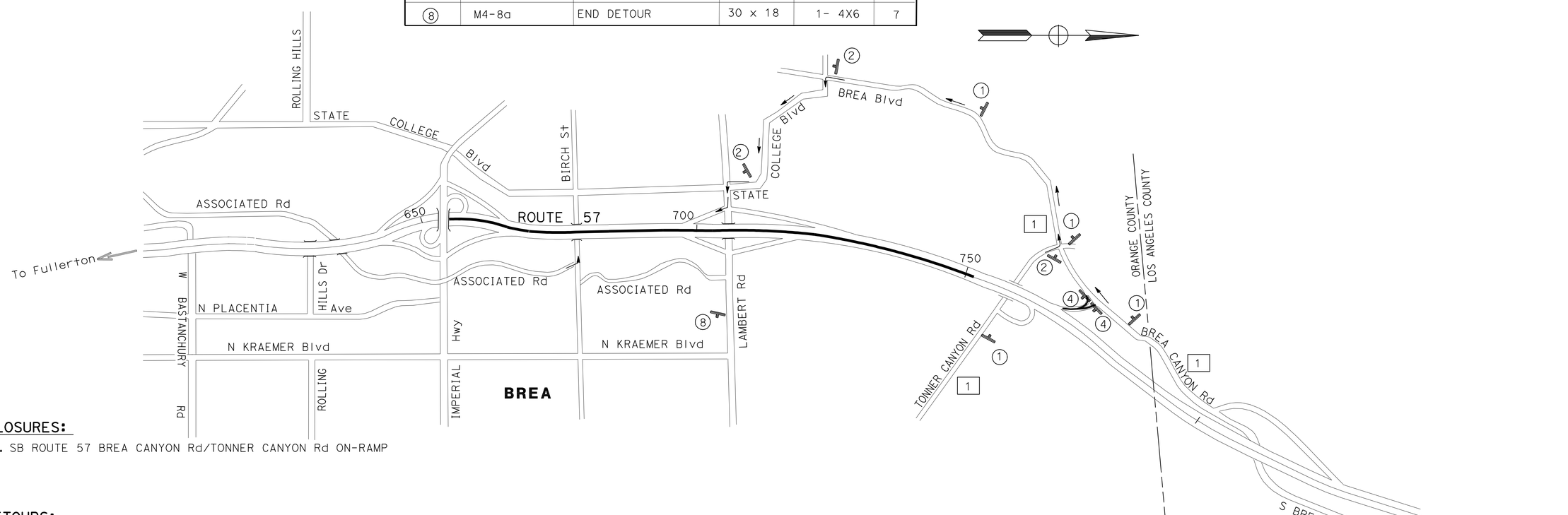

CLOSURES:

1. SB ROUTE 57 BREA CANYON Rd/TONNER CANYON Rd ON-RAMP

DETOURS:

1. BREA CANYON Rd / TONNER CANYON Rd TO SB STATE COLLEGE Blvd TO EB LAMBERT Rd TO SB 57 ON-RAMP

TRAFFIC HANDLING PLAN (DETOUR)

THIS PLAN ACCURATE FOR TRAFFIC HANDLING WORK ONLY

NO SCALE

TH-1

REVISED BY	DATE REVISED
NAM TU DAO	04-27-10

CALCULATED-DESIGNED BY	CHECKED BY
RAMPHA REAO	NAM TU DAO

FUNCTIONAL SUPERVISOR: MILI LIM STAMATION

STATE OF CALIFORNIA - DEPARTMENT OF TRANSPORTATION
Caltrans® DESIGN DIVISION

LAST REVISION 06-28-10 | DATE PLOTTED => 08-JUL-2010 | TIME PLOTTED => 17:13

Dist	COUNTY	ROUTE	POST MILES TOTAL PROJECT	SHEET No.	TOTAL SHEETS
12	Ora	57	20.1/21.8	14	48

Nam Tu Dao 06-02-10
REGISTERED CIVIL ENGINEER DATE

7-6-10
PLANS APPROVAL DATE

REGISTERED PROFESSIONAL ENGINEER NAM TU DAO No. C 30349 Exp. 3/31/12 CIVIL STATE OF CALIFORNIA

THE STATE OF CALIFORNIA OR ITS OFFICERS OR AGENTS SHALL NOT BE RESPONSIBLE FOR THE ACCURACY OR COMPLETENESS OF SCANNED COPIES OF THIS PLAN SHEET.

NOTE:

EXACT SIGN LOCATIONS TO BE DETERMINED BY THE ENGINEER AND PLACED WITHIN THE STATE R/W.

PORTABLE CHANGABLE MESSAGE SIGN

SIGN SYMBOL	SIGN MESSAGE(*)	No. OF SIGNS
2	SB 57 OFF-RAMP CLOSED AHEAD USE IMPERIAL Hwy DETOUR	1
3	SB 57 ON-RAMP CLOSED AHEAD USE S STATE COLLEGE Blvd DETOUR	3

(*) EXACT MESSAGE ON PCMS TO BE DETERMINED BY THE ENGINEER.

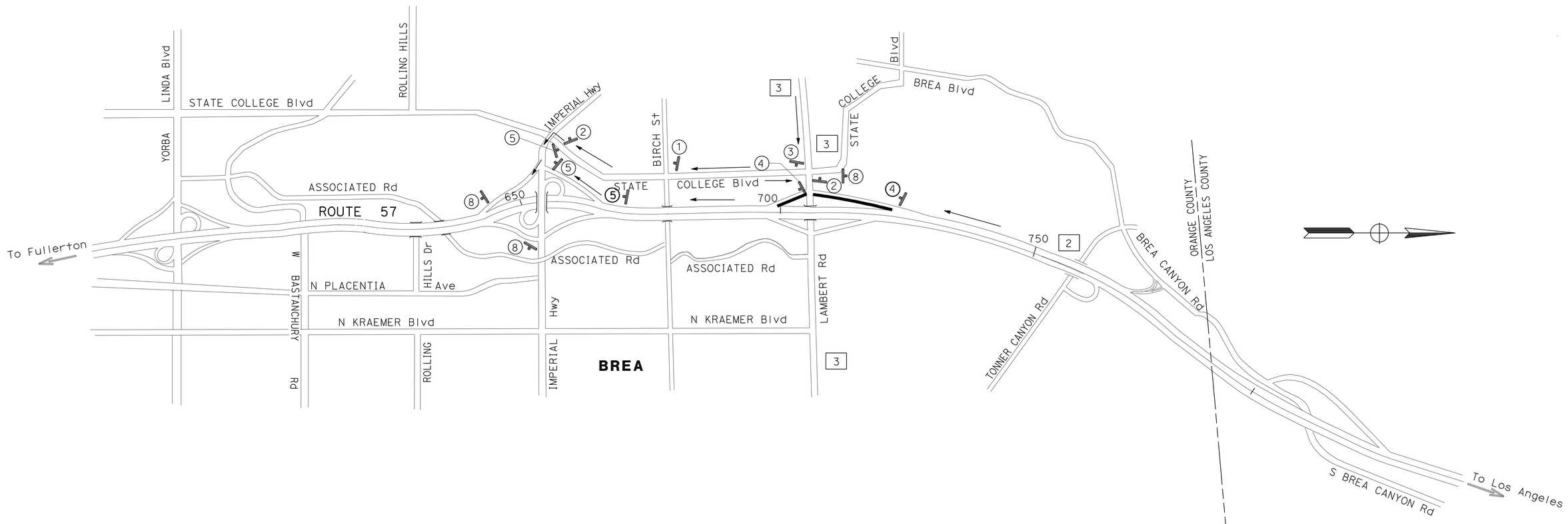

CLOSURES:

2. SB ROUTE 57 LAMBERT Rd OFF-RAMP
3. SB ROUTE 57 LAMBERT Rd ON-RAMP

DETOURS:

2a. SB 57 TO IMPERIAL Hwy OFF-RAMP TO NB STATE COLLEGE Blvd TO LAMBERT Rd
3a. WB/EB LAMBERT Rd TO SB STATE COLLEGE Blvd TO EB IMPERIAL Hwy TO SB 57 ON-RAMP

TRAFFIC HANDLING PLAN (DETOUR)

NO SCALE

THIS PLAN ACCURATE FOR TRAFFIC HANDLING WORK ONLY

TH-2

REVISED BY	DATE REVISED
NAM TU DAO	04-27-10

CALCULATED-DESIGNED BY	CHECKED BY
RAMPHA REAO	NAM TU DAO

FUNCTIONAL SUPERVISOR: MILI LIM STAMATION

STATE OF CALIFORNIA - DEPARTMENT OF TRANSPORTATION
Caltrans DESIGN DIVISION

LAST REVISION 05-04-10 | DATE PLOTTED => 08-JUL-2010 | TIME PLOTTED => 17:14

Dist	COUNTY	ROUTE	POST MILES TOTAL PROJECT	SHEET No.	TOTAL SHEETS
12	Ora	57	20.1/21.8	15	48

REGISTERED CIVIL ENGINEER 06-02-10 DATE

7-6-10
PLANS APPROVAL DATE

REGISTERED PROFESSIONAL ENGINEER NAM TU DAO No. C 30349 Exp. 3/31/12 CIVIL STATE OF CALIFORNIA

THE STATE OF CALIFORNIA OR ITS OFFICERS OR AGENTS SHALL NOT BE RESPONSIBLE FOR THE ACCURACY OR COMPLETENESS OF SCANNED COPIES OF THIS PLAN SHEET.

NOTE:

EXACT SIGN LOCATIONS TO BE DETERMINED BY THE ENGINEER AND PLACED WITHIN THE STATE R/W.

PORTABLE CHANGABLE MESSAGE SIGN

SIGN SYMBOL	SIGN MESSAGE(*)	No. OF SIGNS
4	SB 57 OFF-RAMP CLOSED AHEAD USE YORBA LINDA Blvd DETOUR	1
5	SB 57 LOOP ON-RAMP CLOSED AHEAD USE S STATE COLLEGE Blvd DETOUR	1

(*) EXACT MESSAGE ON PCMS TO BE DETERMINED BY THE ENGINEER.

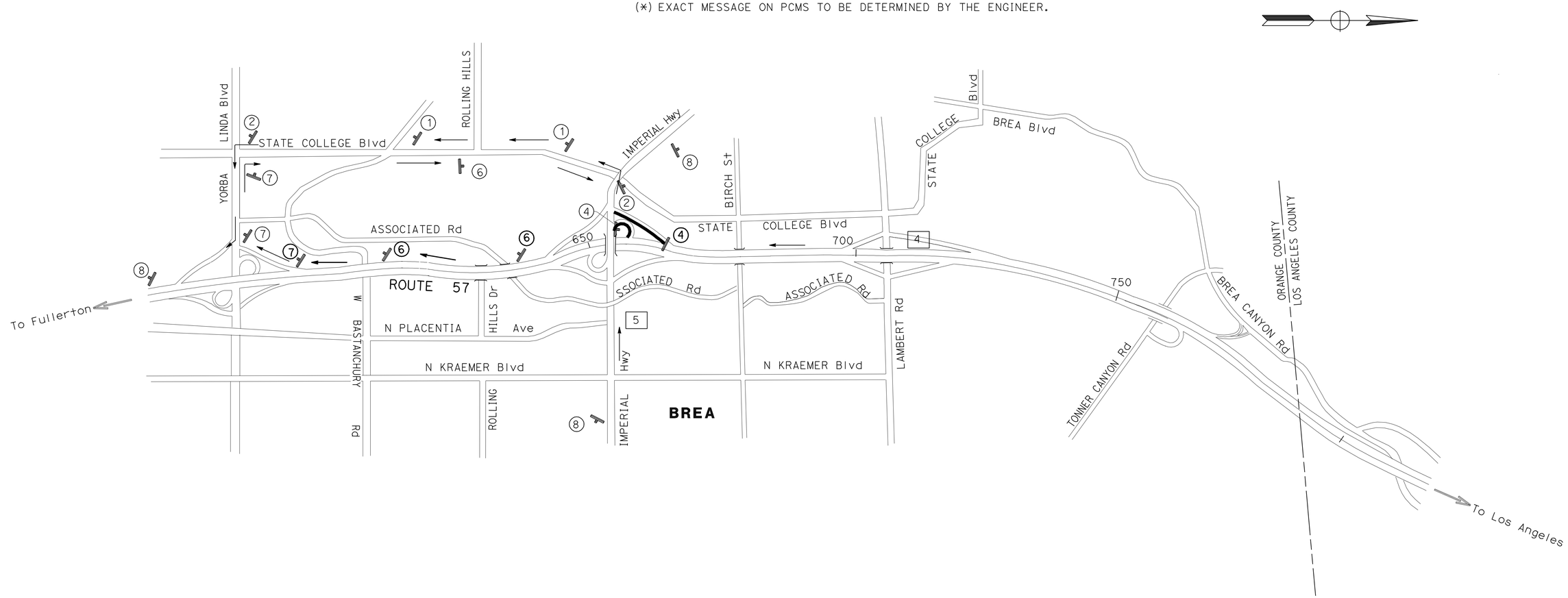

CLOSURES:

4. SB ROUTE 57 IMPERIAL Hwy OFF-RAMP
5. SB ROUTE 57 IMPERIAL Hwy LOOP ON-RAMP

DETOURS:

4. SB 57 TO YORBA LINDA Blvd OFF-RAMP TO NB STATE COLLEGE Blvd TO IMPERIAL Hwy
5. WB IMPERIAL Hwy UTURN AT STATE COLLEGE Blvd TO SB 57 ON-RAMP

TRAFFIC HANDLING PLAN (DETOUR)

NO SCALE

THIS PLAN ACCURATE FOR TRAFFIC HANDLING WORK ONLY

TH-3

REVISED BY	DATE REVISED
NAM TU DAO	04-27-10

CALCULATED-DESIGNED BY: RAMPHA REAO
CHECKED BY: NAM TU DAO
FUNCTIONAL SUPERVISOR: MILI LIM STAMATION

STATE OF CALIFORNIA - DEPARTMENT OF TRANSPORTATION
Caltrans® DESIGN DIVISION

LAST REVISION 05-04-10
DATE PLOTTED => 08-JUL-2010
TIME PLOTTED => 13:58

Dist	COUNTY	ROUTE	POST MILES TOTAL PROJECT	SHEET No.	TOTAL SHEETS
12	Ora	57	20.1/21.8	16	48

REGISTERED CIVIL ENGINEER 06-02-10 DATE

7-6-10
PLANS APPROVAL DATE

REGISTERED PROFESSIONAL ENGINEER
NAM TU DAO
No. C 30349
Exp. 3/31/12
CIVIL
STATE OF CALIFORNIA

THE STATE OF CALIFORNIA OR ITS OFFICERS OR AGENTS SHALL NOT BE RESPONSIBLE FOR THE ACCURACY OR COMPLETENESS OF SCANNED COPIES OF THIS PLAN SHEET.

NOTE:

1. HEIGHT, LATERAL POSITION, AND COLOR OF SIGNS SHALL BE IN ACCORDANCE WITH THE "MANUAL ON UNIFORM TRAFFIC CONTROL DEVICES" FOR STREETS AND HIGHWAYS, 2003 EDITION.

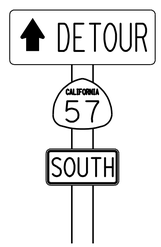

SC3 (CA)
G28-2 (57)
M3-3
1

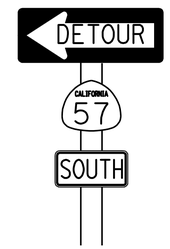

M4-10 (Lt)
G28-2 (57)
M3-3
2

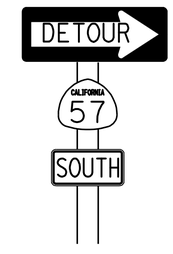

M4-10 (Rt)
G28-2 (57)
M3-3
3

SC6-4 (CA)
4

M4-10 (Rt)
D-3
5

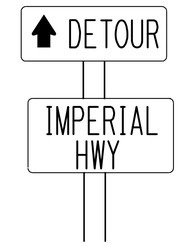

SC3 (CA)
D-3
6

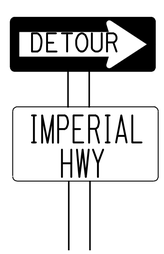

M4-10 (Rt)
D-3
7

M4-8a
8

TRAFFIC HANDLING DETAILS

NO SCALE

THD-1

STATE OF CALIFORNIA - DEPARTMENT OF TRANSPORTATION
Caltrans® DESIGN DIVISION

FUNCTIONAL SUPERVISOR: MILI LIM STAMATION

CALCULATED-DESIGNED BY: RAMPHA REAO
CHECKED BY: NAM TU DAO

REVISED BY: NAM TU DAO
DATE REVISED: 05-18-10

LAST REVISION 05-25-10
DATE PLOTTED => 08-JUL-2010
TIME PLOTTED => 13:58

Dist	COUNTY	ROUTE	POST MILES TOTAL PROJECT	SHEET No.	TOTAL SHEETS
12	Ora	57	20.1/21.8	17	48

REGISTERED CIVIL ENGINEER 06-02-10 DATE

7-6-10
PLANS APPROVAL DATE

REGISTERED PROFESSIONAL ENGINEER NAM TU DAO No. C 30349 Exp. 3/31/12 CIVIL STATE OF CALIFORNIA

THE STATE OF CALIFORNIA OR ITS OFFICERS OR AGENTS SHALL NOT BE RESPONSIBLE FOR THE ACCURACY OR COMPLETENESS OF SCANNED COPIES OF THIS PLAN SHEET.

NOTE:

EXACT SIGN LOCATIONS TO BE DETERMINED BY THE ENGINEER AND PLACED WITHIN THE STATE R/W.

LEGEND:

SIGN 1- POST

(X) CONSTRUCTION AREA SIGN

STATIONARY MOUNTED CONSTRUCTION AREA SIGNS

SIGN No.	SIGN CODE	PANEL SIZE (IN)	SIGN MESSAGE	No. OF POST AND SIZE (IN)	No. OF SIGNS
(A)	W20-1	48 x 48	ROAD WORK AHEAD	1- 4 x 6	3
(B)	G20-2	48 x 18	END ROAD WORK	1- 4 x 4	3

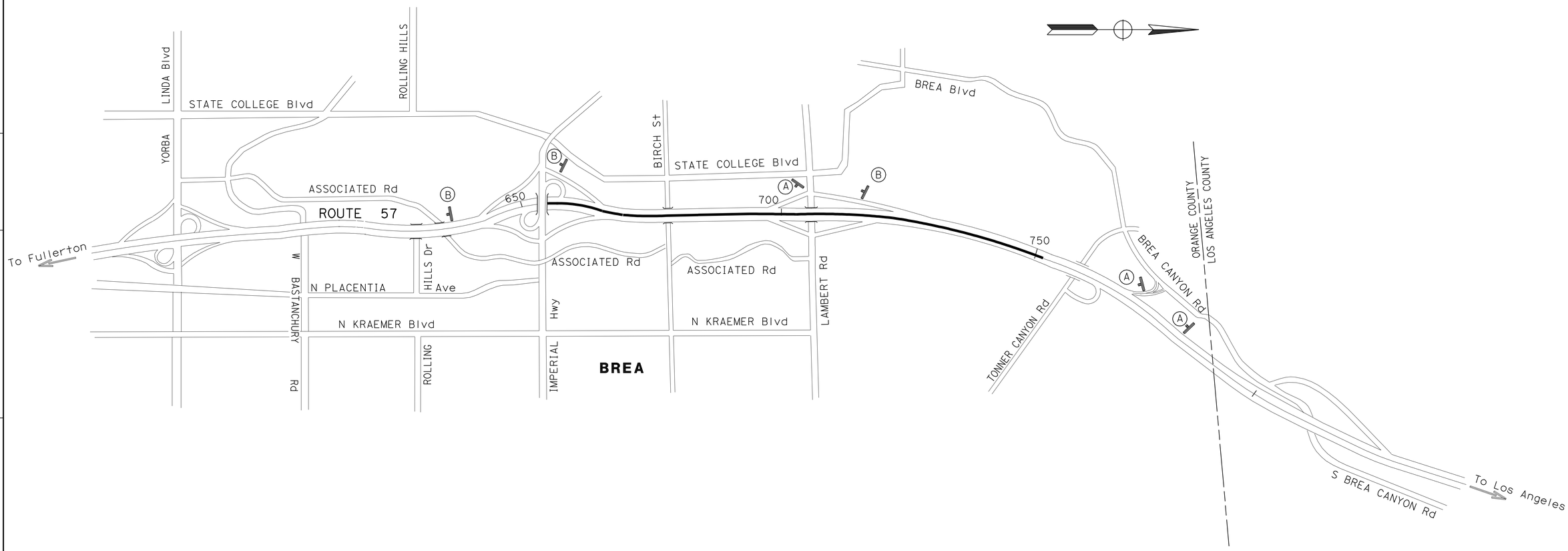

CONSTRUCTION AREA SIGNS

THIS PLAN ACCURATE FOR CONSTRUCTION AREA SIGN WORK ONLY.

NO SCALE

CS-1

REVISED BY	DATE REVISED
NAM TU DAO	04-27-10

RAMPHA REAO — CALCULATED-DESIGNED BY
NAM TU DAO — CHECKED BY

FUNCTIONAL SUPERVISOR
MILI LIM STAMATION

STATE OF CALIFORNIA - DEPARTMENT OF TRANSPORTATION
Caltrans® DESIGN DIVISION

LAST REVISION 05-04-10 | DATE PLOTTED => 08-JUL-2010 | TIME PLOTTED => 16:55

BORDER LAST REVISED 4/11/2008 | RELATIVE BORDER SCALE IS IN INCHES 0 1 2 3 | USERNAME => trlim | DGN FILE => c0k5401a001.dgn | CU 12220 | EA 0K5401

Dist	COUNTY	ROUTE	POST MILES TOTAL PROJECT	SHEET No.	TOTAL SHEETS
12	Ora	57	20.1/21.8	18	48

REGISTERED CIVIL ENGINEER 06-29-10 DATE

7-6-10
PLANS APPROVAL DATE

REGISTERED PROFESSIONAL ENGINEER NAM TU DAO No. C 30349 Exp. 3/31/12 CIVIL STATE OF CALIFORNIA

THE STATE OF CALIFORNIA OR ITS OFFICERS OR AGENTS SHALL NOT BE RESPONSIBLE FOR THE ACCURACY OR COMPLETENESS OF SCANNED COPIES OF THIS PLAN SHEET.

NOTES:

1. ALL TRAFFIC STRIPES AND PAVEMENT MARKINGS ARE THERMOPLASTIC UNLESS OTHERWISE NOTED.
2. REMOVE ALL CONFLICTING PAVEMENT DELINEATION.
3. EXACT LOCATION OF PAVEMENT MARKINGS SHALL BE DETERMINED BY THE ENGINEER.

LEGEND:

- [#] PAVEMENT DELINEATION DETAIL NUMBER
- (X) ROAD SIGN IDENTIFICATION NUMBER
- CHANGE IN PAVEMENT DELINEATION

ABBREVIATIONS:

- C "CAR" PAVEMENT MARKING
- P "POOL" PAVEMENT MARKING
- O "ONLY" PAVEMENT MARKING

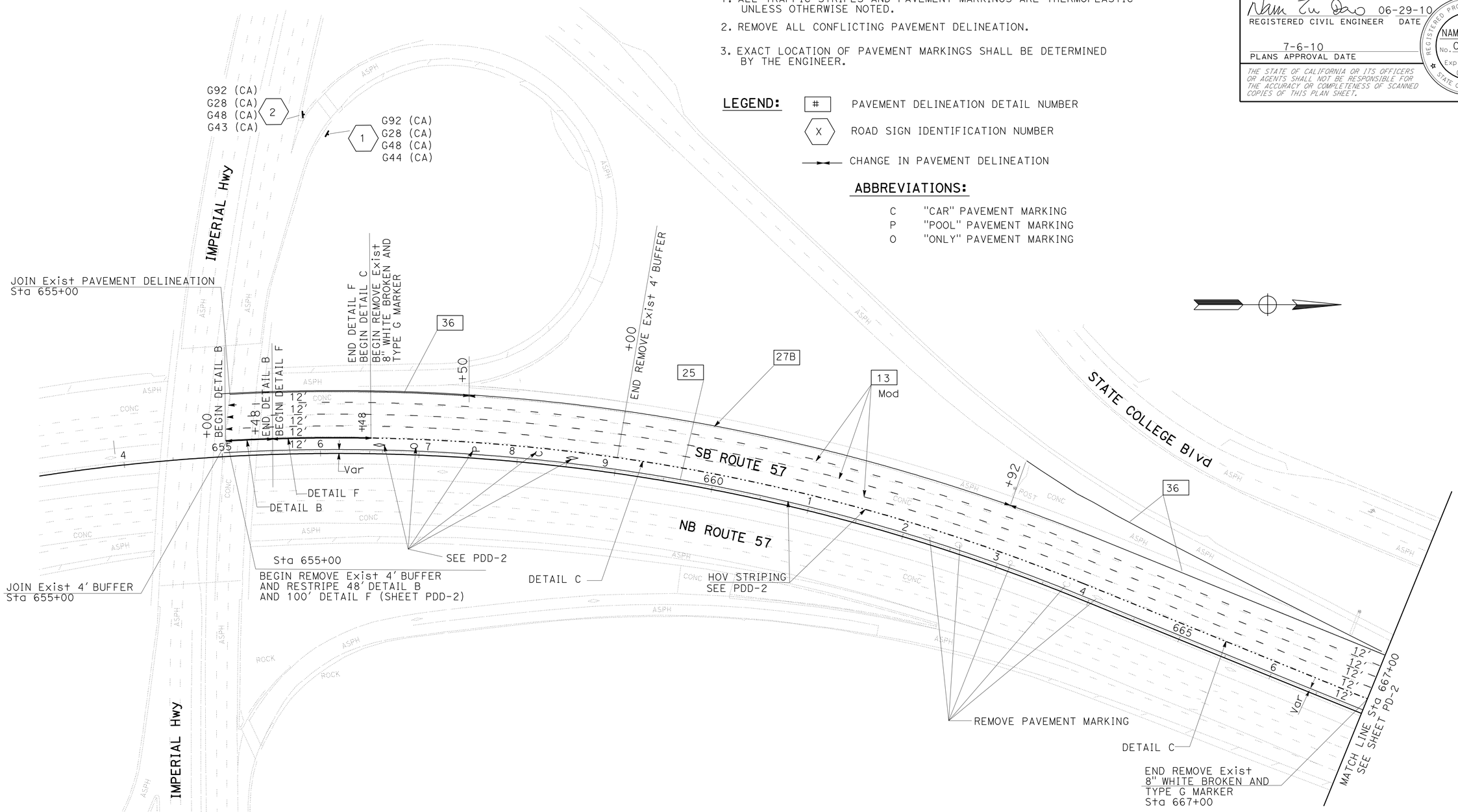

PAVEMENT DELINEATION AND SIGN PLAN

SCALE: 1" = 50'

PD-1

THIS PLAN ACCURATE FOR PAVEMENT DELINEATION AND SIGNING ONLY

STATE OF CALIFORNIA - DEPARTMENT OF TRANSPORTATION
Caltrans® DESIGN DIVISION

FUNCTIONAL SUPERVISOR: MILI LIM STAMATION

CALCULATED-DESIGNED BY: RAMPHA REAO
CHECKED BY: NAM TU DAO

REVISED BY: NAM TU DAO
DATE REVISED: 05-18-10

LAST REVISION 06-28+10
DATE PLOTTED => 08-JUL-2010
TIME PLOTTED => 13:58

BORDER LAST REVISED 4/11/2008
RELATIVE BORDER SCALE IS IN INCHES 0 1 2 3
USERNAME => trlim
DGN FILE => c0k540na001.dgn
CU 12220
EA 0K5401

Dist	COUNTY	ROUTE	POST MILES TOTAL PROJECT	SHEET No.	TOTAL SHEETS
12	Ora	57	20.1/21.8	19	48

Nam Tu Dao 06-29-10
REGISTERED CIVIL ENGINEER DATE

7-6-10
PLANS APPROVAL DATE

REGISTERED PROFESSIONAL ENGINEER
NAM TU DAO
No. C 30349
Exp. 3/31/12
CIVIL
STATE OF CALIFORNIA

THE STATE OF CALIFORNIA OR ITS OFFICERS OR AGENTS SHALL NOT BE RESPONSIBLE FOR THE ACCURACY OR COMPLETENESS OF SCANNED COPIES OF THIS PLAN SHEET.

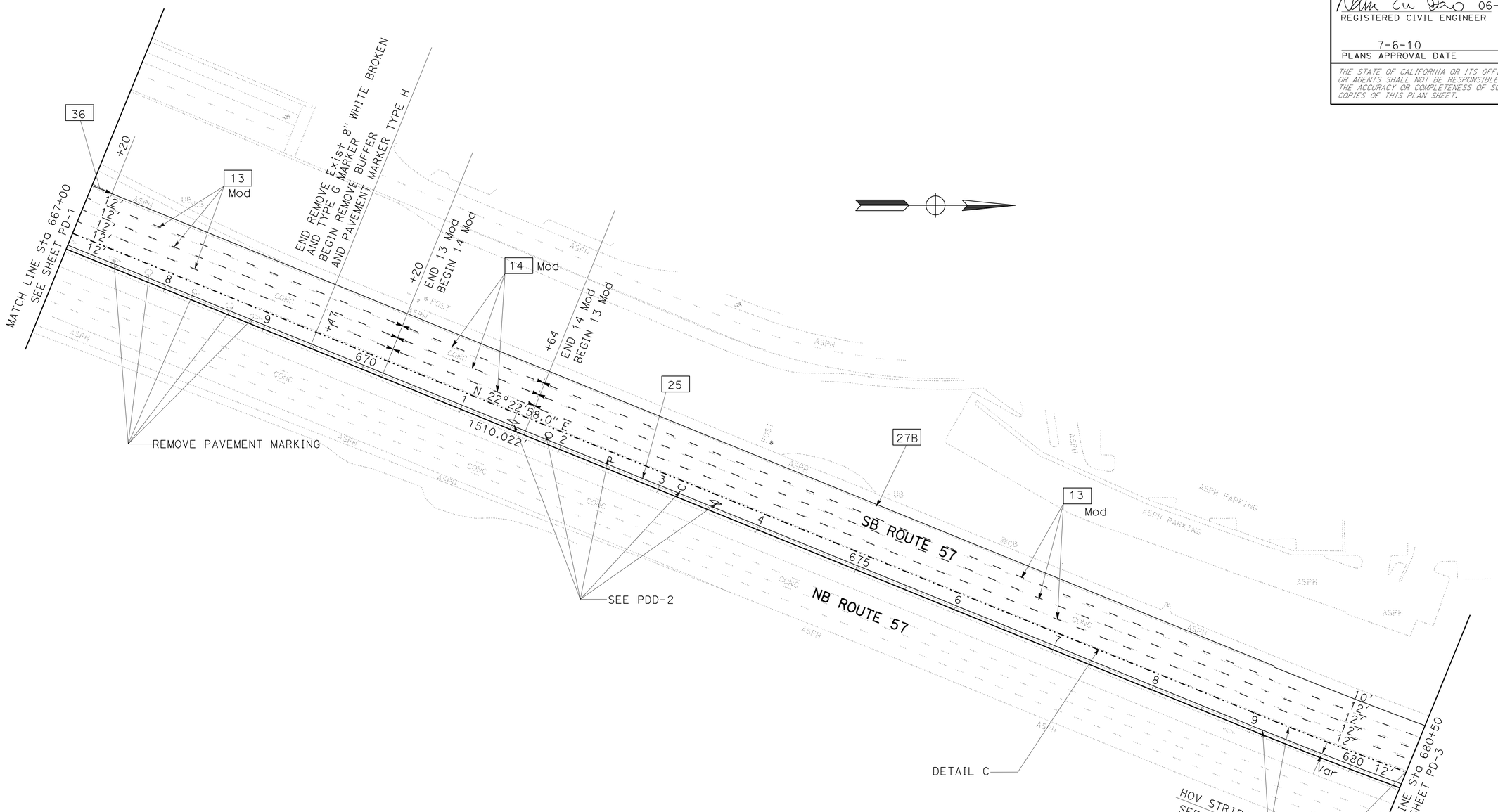

PAVEMENT DELINEATION PLAN

THIS PLAN ACCURATE FOR PAVEMENT DELINEATION AND SIGNING ONLY

SCALE: 1" = 50'

PD-2

STATE OF CALIFORNIA - DEPARTMENT OF TRANSPORTATION
Caltrans® DESIGN DIVISION

FUNCTIONAL SUPERVISOR: MILI LIM STAMATION
CALCULATED-DESIGNED BY: RAMPHA REAO
CHECKED BY: NAM TU DAO
REVISED BY: NAM TU DAO
DATE REVISED: 05-04-10

LAST REVISION 06-28-10
DATE PLOTTED => 08-JUL-2010
TIME PLOTTED => 13:59

BORDER LAST REVISED 4/11/2008
RELATIVE BORDER SCALE IS IN INCHES 0 1 2 3
USERNAME => trlim
DGN FILE => c0k540na002.dgn
CU 12220
EA 0K5401

Dist	COUNTY	ROUTE	POST MILES TOTAL PROJECT	SHEET No.	TOTAL SHEETS
12	Ora	57	20.1/21.8	20	48

Nam Tu Dao 06-29-10
REGISTERED CIVIL ENGINEER DATE

7-6-10
PLANS APPROVAL DATE

REGISTERED PROFESSIONAL ENGINEER
NAM TU DAO
No. C 30349
Exp. 3/31/12
CIVIL
STATE OF CALIFORNIA

THE STATE OF CALIFORNIA OR ITS OFFICERS OR AGENTS SHALL NOT BE RESPONSIBLE FOR THE ACCURACY OR COMPLETENESS OF SCANNED COPIES OF THIS PLAN SHEET.

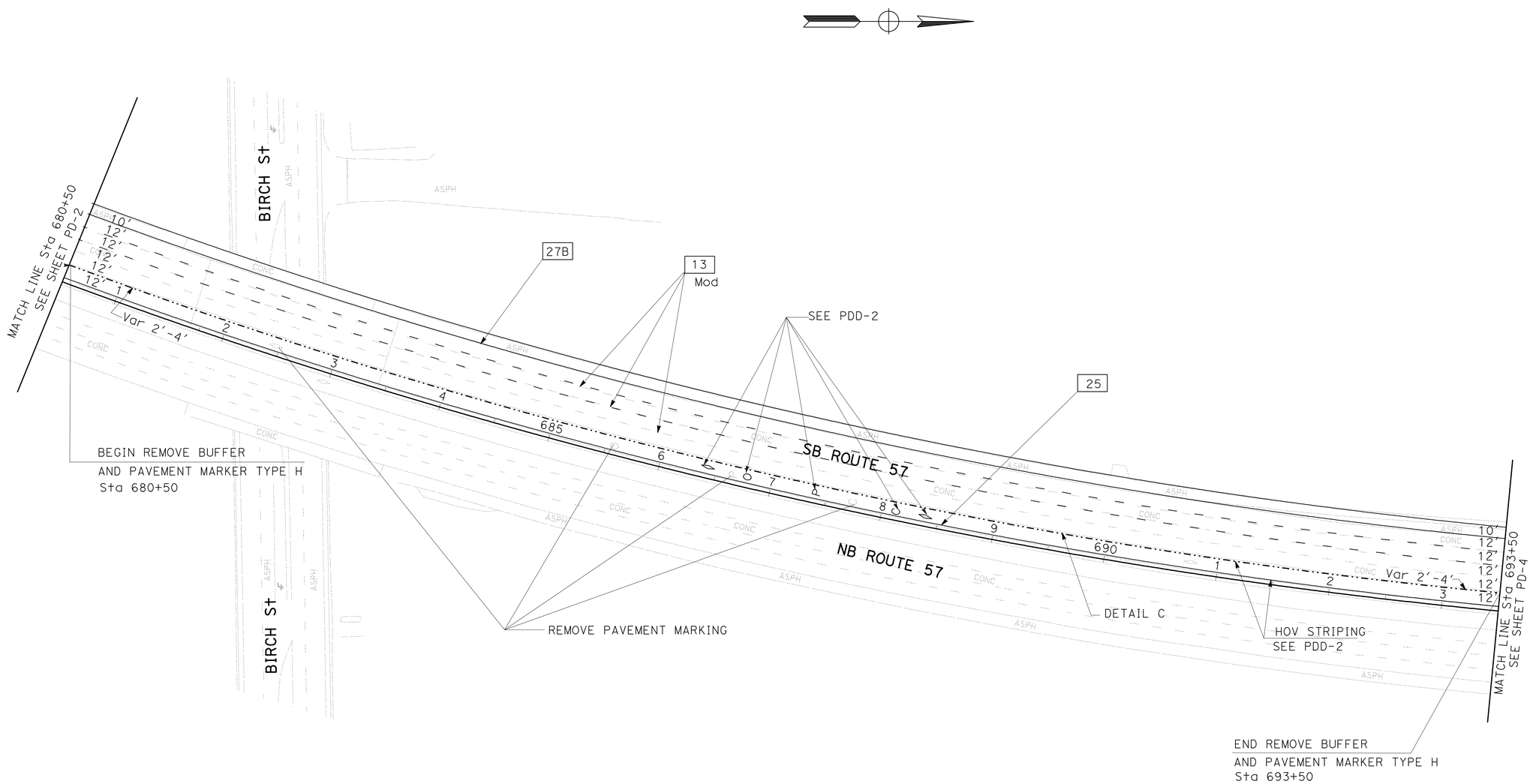

PAVEMENT DELINEATION PLAN

THIS PLAN ACCURATE FOR PAVEMENT DELINEATION AND SIGNING ONLY

SCALE: 1" = 50'

PD-3

REVISED BY	DATE REVISED
NAM TU DAO	05-04-10

CALCULATED-DESIGNED BY	CHECKED BY
RAMPHA REAO	NAM TU DAO

FUNCTIONAL SUPERVISOR: MILI LIM STAMATION

STATE OF CALIFORNIA - DEPARTMENT OF TRANSPORTATION
Caltrans® DESIGN DIVISION

LAST REVISION 06-28-10 | DATE PLOTTED => 08-JUL-2010 | TIME PLOTTED => 13:59

Dist	COUNTY	ROUTE	POST MILES TOTAL PROJECT	SHEET No.	TOTAL SHEETS
12	Ora	57	20.1/21.8	21	48

Nam Tu Dao 06-29-10
REGISTERED CIVIL ENGINEER DATE

7-6-10
PLANS APPROVAL DATE

REGISTERED PROFESSIONAL ENGINEER
NAM TU DAO
No. C 30349
Exp. 3/31/12
CIVIL
STATE OF CALIFORNIA

THE STATE OF CALIFORNIA OR ITS OFFICERS OR AGENTS SHALL NOT BE RESPONSIBLE FOR THE ACCURACY OR COMPLETENESS OF SCANNED COPIES OF THIS PLAN SHEET.

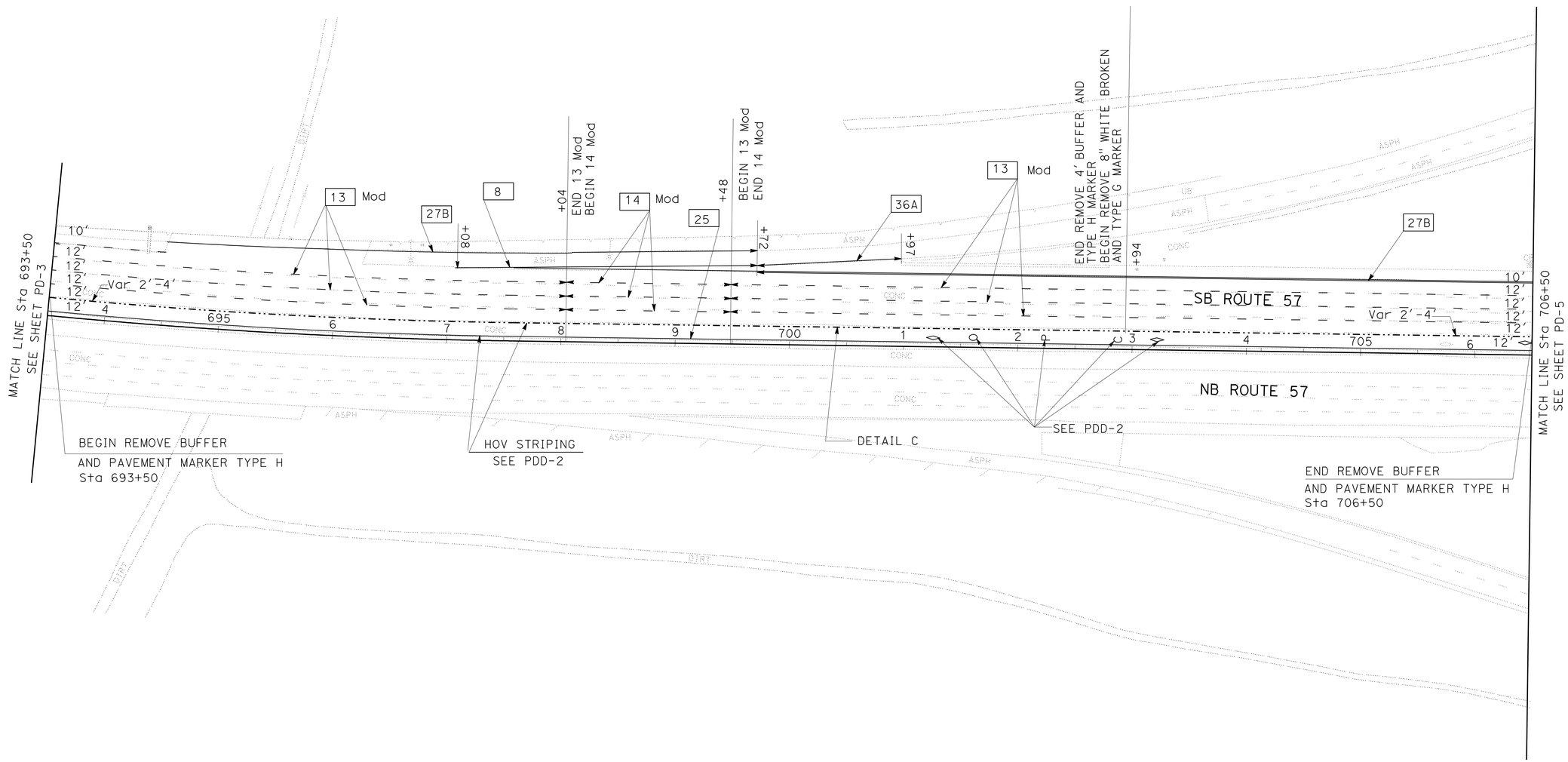

PAVEMENT DELINEATION PLAN

THIS PLAN ACCURATE FOR PAVEMENT DELINEATION AND SIGNING ONLY

SCALE: 1" = 50'

PD-4

REVISED BY	DATE REVISED
NAM TU DAO	05-04-10

CALCULATED-DESIGNED BY	CHECKED BY
RAMPHA REAO	NAM TU DAO

FUNCTIONAL SUPERVISOR: MILI LIM STAMATION

STATE OF CALIFORNIA - DEPARTMENT OF TRANSPORTATION
Caltrans
DESIGN DIVISION

LAST REVISION 06-28-10
DATE PLOTTED => 08-JUL-2010
TIME PLOTTED => 13:59

Dist	COUNTY	ROUTE	POST MILES TOTAL PROJECT	SHEET No.	TOTAL SHEETS
12	Ora	57	20.1/21.8	22	48

Nam Tu Dao 06-29-10
REGISTERED CIVIL ENGINEER DATE

7-6-10
PLANS APPROVAL DATE

REGISTERED PROFESSIONAL ENGINEER
NAM TU DAO
No. C 30349
Exp. 3/31/12
CIVIL
STATE OF CALIFORNIA

THE STATE OF CALIFORNIA OR ITS OFFICERS OR AGENTS SHALL NOT BE RESPONSIBLE FOR THE ACCURACY OR COMPLETENESS OF SCANNED COPIES OF THIS PLAN SHEET.

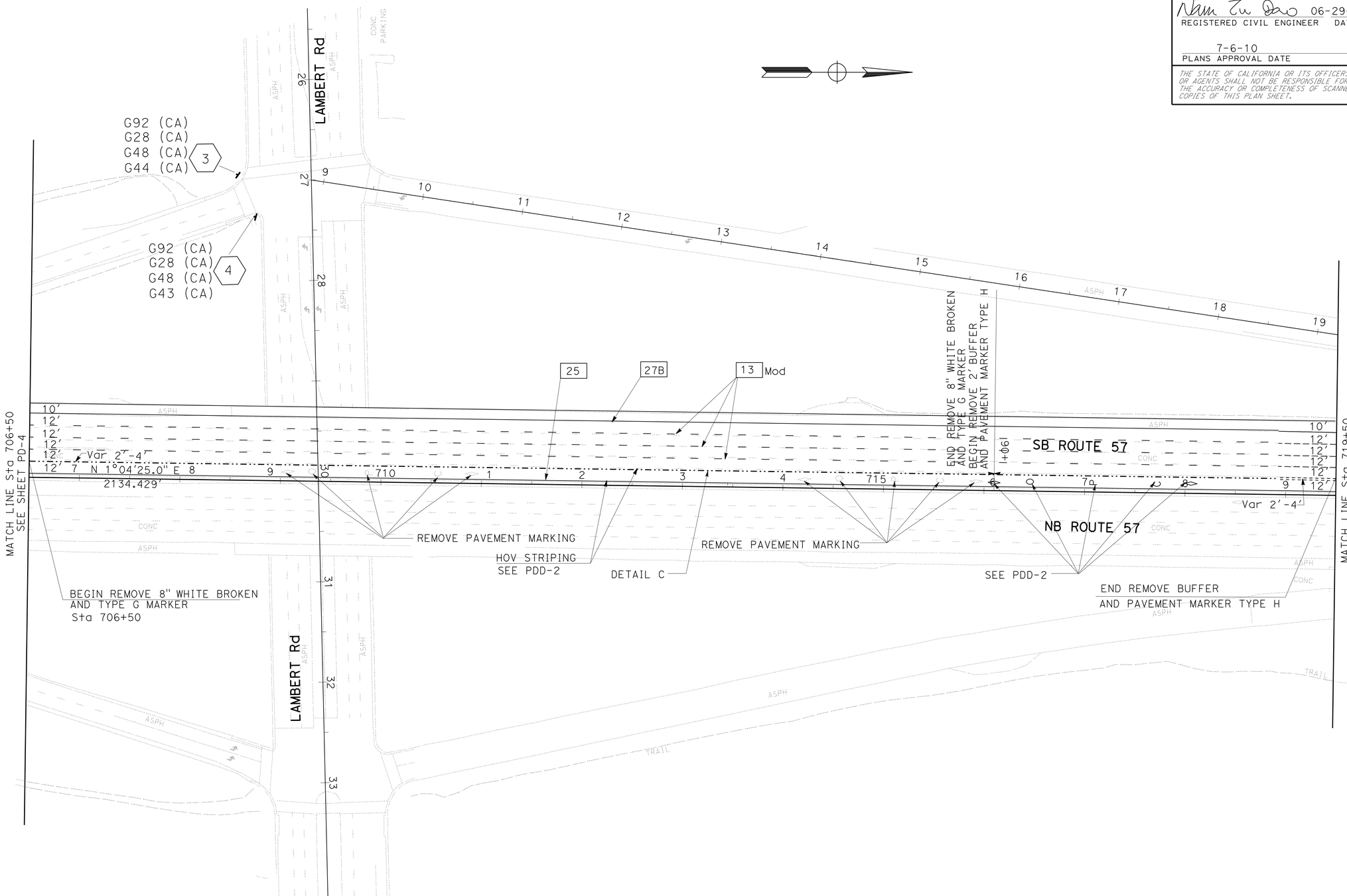

PAVEMENT DELINEATION AND SIGN PLAN

THIS PLAN ACCURATE FOR PAVEMENT DELINEATION AND SIGNING ONLY

SCALE: 1" = 50'

PD-5

REVISED BY	DATE REVISED
NAM TU DAO	05-04-10

CALCULATED-DESIGNED BY: RAMPHA REAO
CHECKED BY: NAM TU DAO
FUNCTIONAL SUPERVISOR: MILI LIM STAMATION

STATE OF CALIFORNIA - DEPARTMENT OF TRANSPORTATION
Caltrans® DESIGN DIVISION

LAST REVISION 06-28-10
DATE PLOTTED => 08-JUL-2010
TIME PLOTTED => 13:59

Dist	COUNTY	ROUTE	POST MILES TOTAL PROJECT	SHEET No.	TOTAL SHEETS
12	Ora	57	20.1/21.8	23	48

Nam Tu Dao 06-29-10
REGISTERED CIVIL ENGINEER DATE

7-6-10
PLANS APPROVAL DATE

REGISTERED PROFESSIONAL ENGINEER
NAM TU DAO
No. C 30349
Exp. 3/31/12
CIVIL
STATE OF CALIFORNIA

THE STATE OF CALIFORNIA OR ITS OFFICERS OR AGENTS SHALL NOT BE RESPONSIBLE FOR THE ACCURACY OR COMPLETENESS OF SCANNED COPIES OF THIS PLAN SHEET.

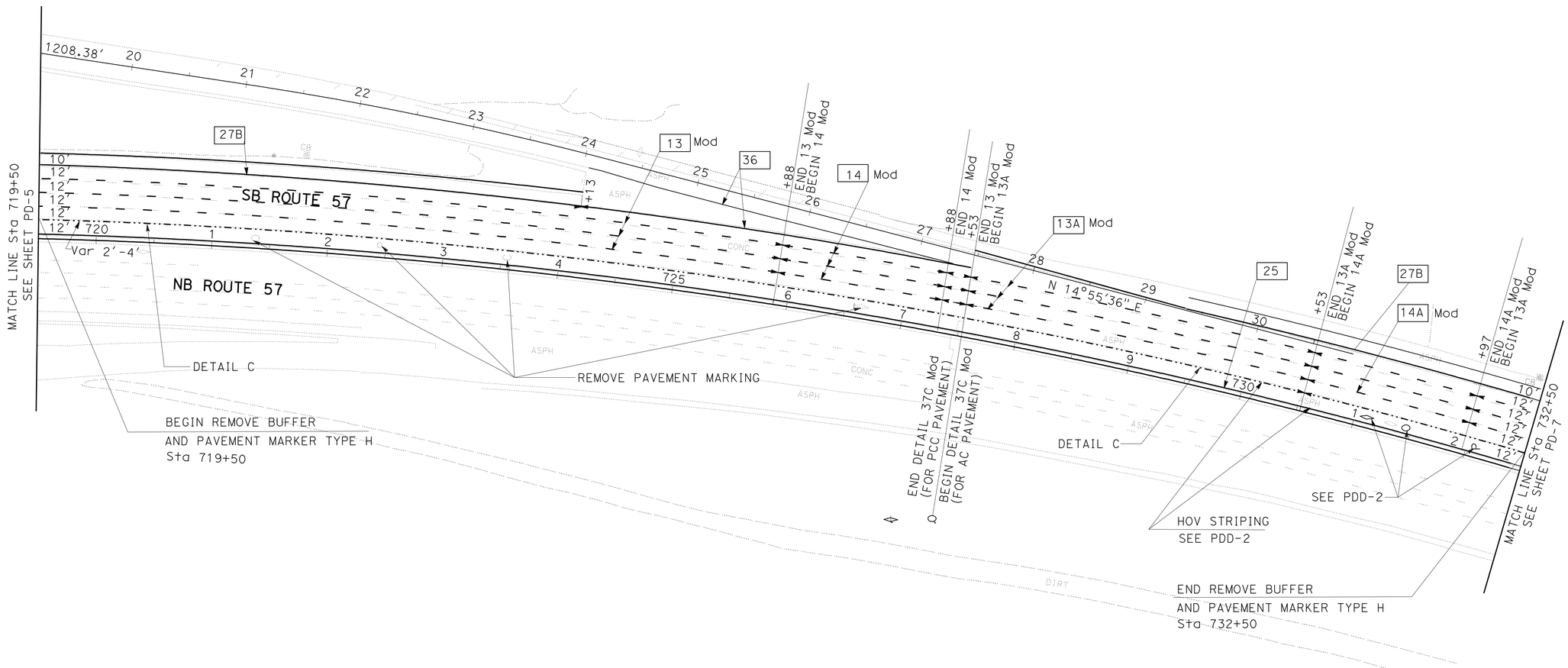

PAVEMENT DELINEATION PLAN

THIS PLAN ACCURATE FOR PAVEMENT DELINEATION AND SIGNING ONLY

SCALE: 1" = 50'

PD-6

REVISED BY	DATE REVISED
NAM TU DAO	05-04-10

CALCULATED-DESIGNED BY: RAMPHA REAO
CHECKED BY: NAM TU DAO

FUNCTIONAL SUPERVISOR: MILI LIM STAMATION

STATE OF CALIFORNIA - DEPARTMENT OF TRANSPORTATION
Caltrans
DESIGN DIVISION

LAST REVISION 06-28-10
DATE PLOTTED => 08-JUL-2010
TIME PLOTTED => 13:59

Dist	COUNTY	ROUTE	POST MILES TOTAL PROJECT	SHEET No.	TOTAL SHEETS
12	Ora	57	20.1/21.8	24	48

Nam Tu Dao 06-29-10
REGISTERED CIVIL ENGINEER DATE

7-6-10
PLANS APPROVAL DATE

REGISTERED PROFESSIONAL ENGINEER
NAM TU DAO
No. C 30349
Exp. 3/31/12
CIVIL
STATE OF CALIFORNIA

THE STATE OF CALIFORNIA OR ITS OFFICERS OR AGENTS SHALL NOT BE RESPONSIBLE FOR THE ACCURACY OR COMPLETENESS OF SCANNED COPIES OF THIS PLAN SHEET.

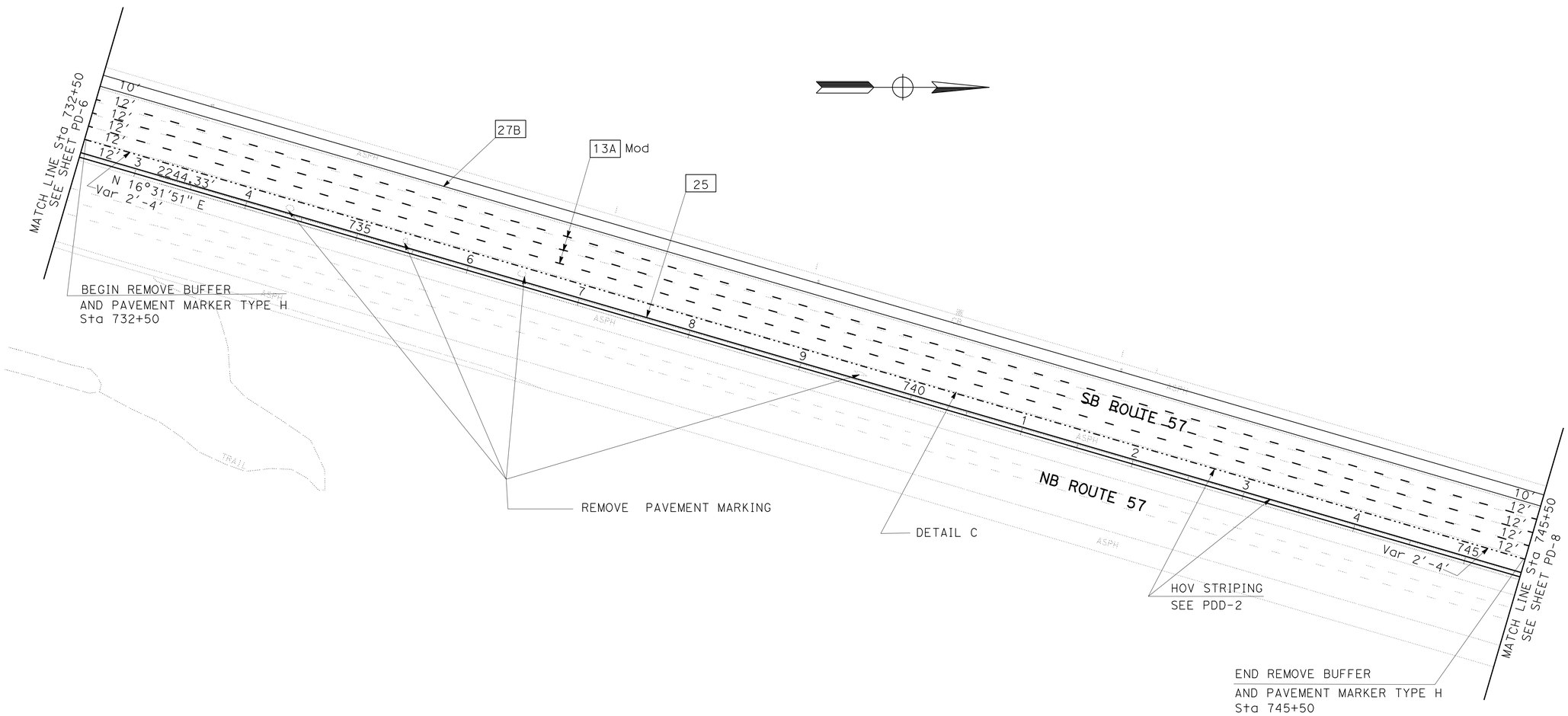

PAVEMENT DELIEATION PLAN

THIS PLAN ACCURATE FOR PAVEMENT DELINEATION AND SIGNING ONLY

SCALE: 1" = 50'

PD-7

REVISED BY	DATE REVISED
NAM TU DAO	05-04-10

RAMPHA REAO — NAM TU DAO

CALCULATED-DESIGNED BY — CHECKED BY

FUNCTIONAL SUPERVISOR — MILI LIM STAMATION

STATE OF CALIFORNIA - DEPARTMENT OF TRANSPORTATION
Caltrans® DESIGN DIVISION

LAST REVISION 06-28-10 | DATE PLOTTED => 08-JUL-2010 | TIME PLOTTED => 13:59

Dist	COUNTY	ROUTE	POST MILES TOTAL PROJECT	SHEET No.	TOTAL SHEETS
12	Ora	57	20.1/21.8	25	48

Nam Tu Dao 06-29-10
REGISTERED CIVIL ENGINEER DATE

7-6-10
PLANS APPROVAL DATE

REGISTERED PROFESSIONAL ENGINEER
NAM TU DAO
No. C 30349
Exp. 3/31/12
CIVIL
STATE OF CALIFORNIA

THE STATE OF CALIFORNIA OR ITS OFFICERS OR AGENTS SHALL NOT BE RESPONSIBLE FOR THE ACCURACY OR COMPLETENESS OF SCANNED COPIES OF THIS PLAN SHEET.

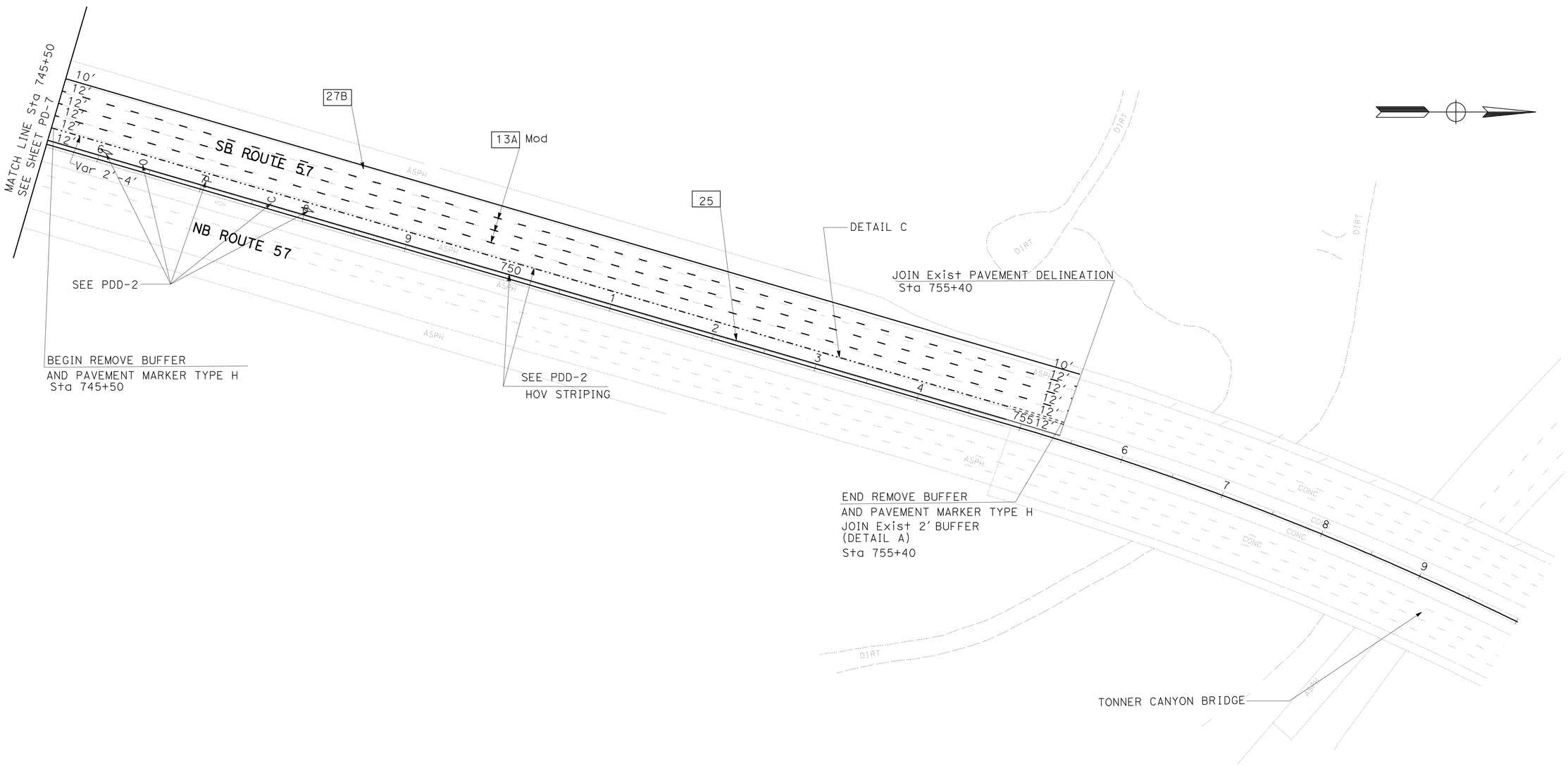

PAVEMENT DELINEATION PLAN

THIS PLAN ACCURATE FOR PAVEMENT DELINEATION AND SIGNING ONLY

SCALE: 1" = 50'

PD-8

REVISED BY	DATE REVISED
NAM TU DAO	05-04-10

RAMPHA REAO — NAM TU DAO

CALCULATED-DESIGNED BY — CHECKED BY

FUNCTIONAL SUPERVISOR — MILI LIM STAMATION

STATE OF CALIFORNIA - DEPARTMENT OF TRANSPORTATION
Caltrans DESIGN DIVISION

LAST REVISION 06-28-10 | DATE PLOTTED => 08-JUL-2010 | TIME PLOTTED => 13:59

Dist	COUNTY	ROUTE	POST MILES TOTAL PROJECT	SHEET No.	TOTAL SHEETS
12	Ora	57	20.1/21.8	26	48

Nam Tu Dao 06-02-10
REGISTERED CIVIL ENGINEER DATE

7-6-10
PLANS APPROVAL DATE

REGISTERED PROFESSIONAL ENGINEER NAM TU DAO No. C 30349 Exp. 3/31/12 CIVIL STATE OF CALIFORNIA

THE STATE OF CALIFORNIA OR ITS OFFICERS OR AGENTS SHALL NOT BE RESPONSIBLE FOR THE ACCURACY OR COMPLETENESS OF SCANNED COPIES OF THIS PLAN SHEET.

NOTES:

1. NON-REFLECTIVE PAVEMENT MARKERS FOR DETAILS 13 Mod AND DETAIL 14 Mod SHALL BE INSTALLED PRIOR TO APPLYING THERMOPLASTIC TRAFFIC STRIPES.
2. EXISTING PAVEMENT DELINEATION SHALL BE REMOVED AND REPLACED AT THE SAME LOCATION.

LEGENDS:

TRAFFIC DIRECTION

CHANGE IN PAVEMENT DELINEATION DETAILS

ABBREVIATION:

HOV: HIGH OCCUPANCY VEHICLE

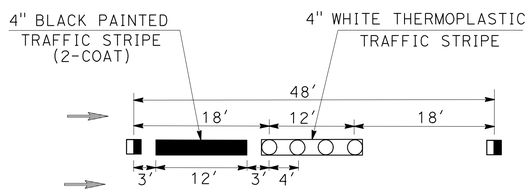

DETAIL 13 Mod
(FOR PCC PAVEMENT)

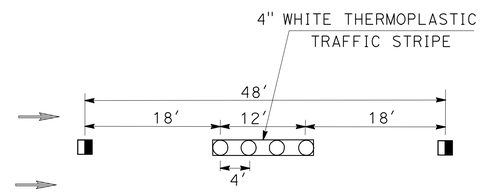

DETAIL 13A Mod
(FOR AC PAVEMENT)

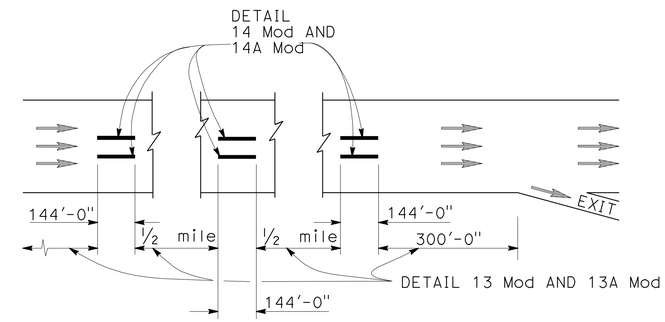

TYPICAL LANE LINE DELINEATION IN ADVANCE OF EXIT RAMP

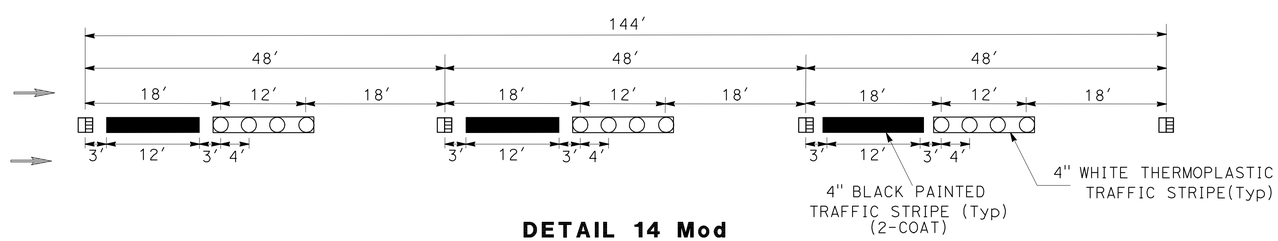

DETAIL 14 Mod
(FOR PCC PAVEMENT)

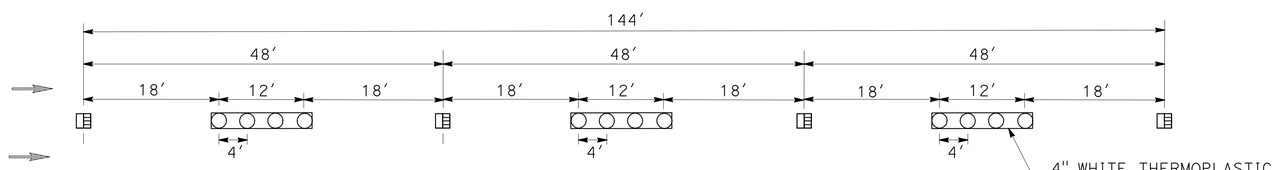

DETAIL 14A Mod
(FOR AC PAVEMENT)

PAVEMENT DELINEATION DETAILS

NO SCALE

PDD-1

CALCULATED-DESIGNED BY	NAM TU DAO
CHECKED BY	05-04-10
REVISED BY	NAM TU DAO
DATE REVISED	05-04-10
FUNCTIONAL SUPERVISOR	MILI LIM STAMATION

STATE OF CALIFORNIA - DEPARTMENT OF TRANSPORTATION
Caltrans® DESIGN DIVISION

LAST REVISION 05-04-10 | DATE PLOTTED => 08-JUL-2010 | TIME PLOTTED => 13:55

Dist	COUNTY	ROUTE	POST MILES TOTAL PROJECT	SHEET No.	TOTAL SHEETS
12	Ora	57	20.1/21.8	27	48

REGISTERED CIVIL ENGINEER 06-02-10 DATE

7-6-10
PLANS APPROVAL DATE

REGISTERED PROFESSIONAL ENGINEER NAM TU DAO No. C 30349 Exp. 3/31/12 CIVIL STATE OF CALIFORNIA

THE STATE OF CALIFORNIA OR ITS OFFICERS OR AGENTS SHALL NOT BE RESPONSIBLE FOR THE ACCURACY OR COMPLETENESS OF SCANNED COPIES OF THIS PLAN SHEET.

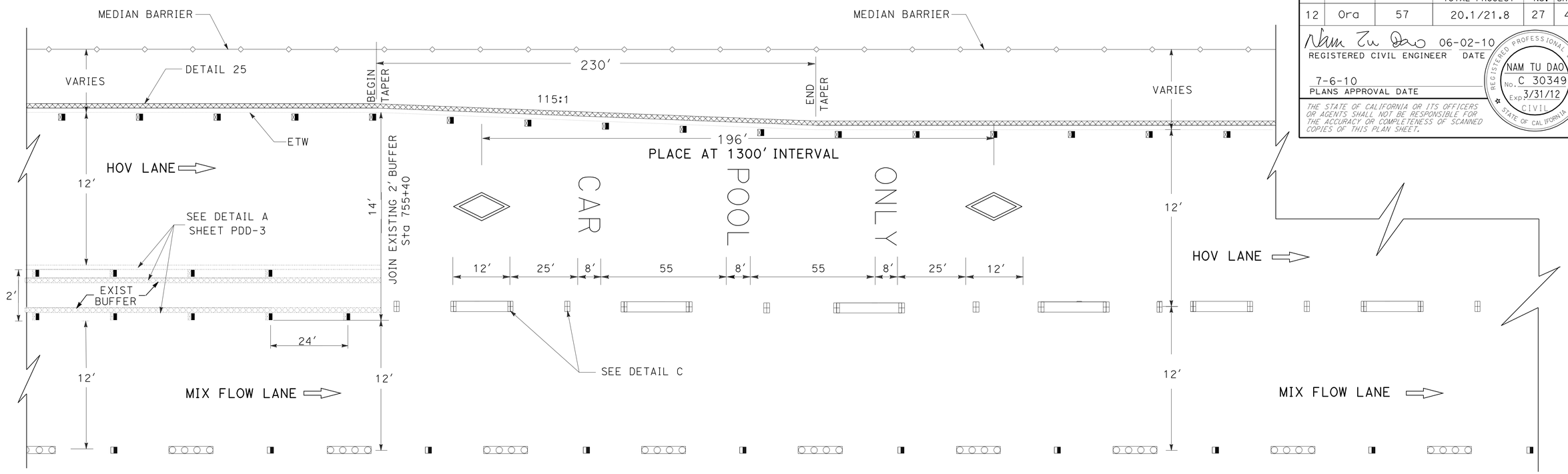

SB SR-57 DETAIL E

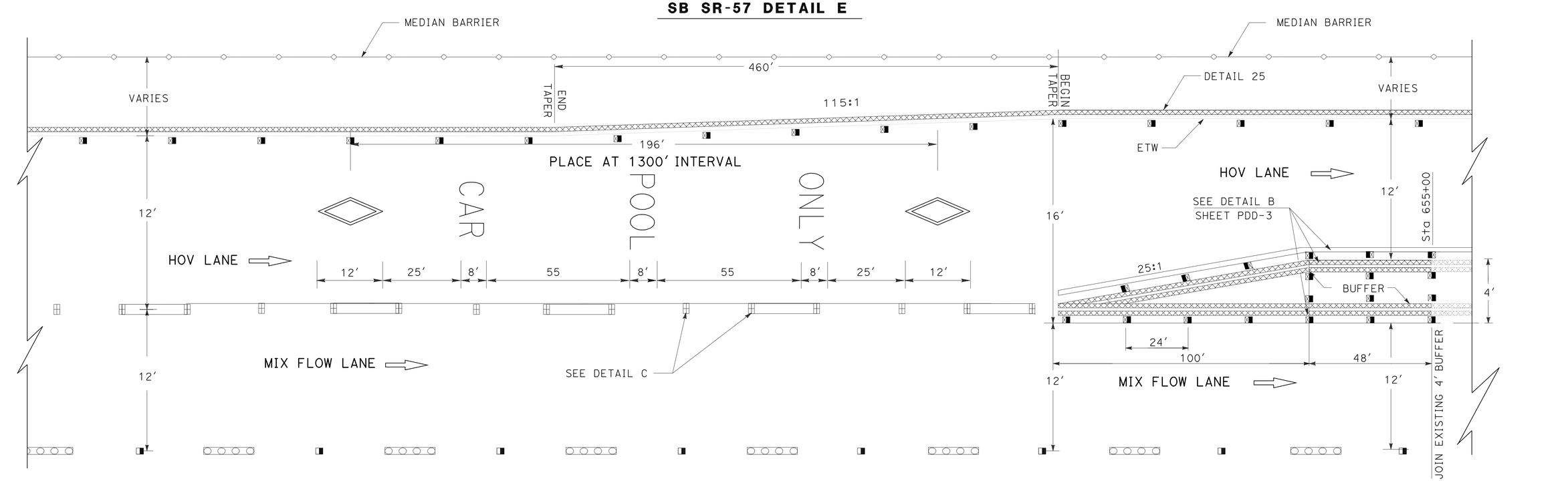

SB SR-57 DETAIL F

PAVEMENT DELINEATION DETAILS (HOV STRIPING AND MARKING)

NO SCALE

PDD-2

REVISED BY	NAM TU DAO
DATE REVISED	05-18-10
RAMPHA REAO	NAM TU DAO
CALCULATED-DESIGNED BY	
CHECKED BY	
FUNCTIONAL SUPERVISOR	MILI LIM STAMATION

STATE OF CALIFORNIA - DEPARTMENT OF TRANSPORTATION
Caltrans® DESIGN DIVISION

LAST REVISION 05-18-10 | DATE PLOTTED => 08-JUL-2010 | TIME PLOTTED => 13:55

Dist	COUNTY	ROUTE	POST MILES TOTAL PROJECT	SHEET No.	TOTAL SHEETS
12	Ora	57	20.1/21.8	28	48

Nam Tu Dao 06-02-10
REGISTERED CIVIL ENGINEER DATE

7-6-10
PLANS APPROVAL DATE

REGISTERED PROFESSIONAL ENGINEER
NAM TU DAO
No. C 30349
Exp. 3/31/12
CIVIL
STATE OF CALIFORNIA

THE STATE OF CALIFORNIA OR ITS OFFICERS OR AGENTS SHALL NOT BE RESPONSIBLE FOR THE ACCURACY OR COMPLETENESS OF SCANNED COPIES OF THIS PLAN SHEET.

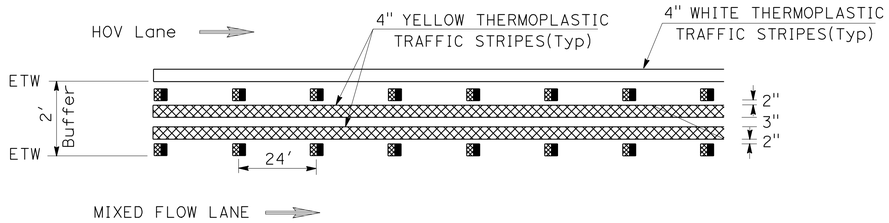

DETAIL A
2' BUFFER

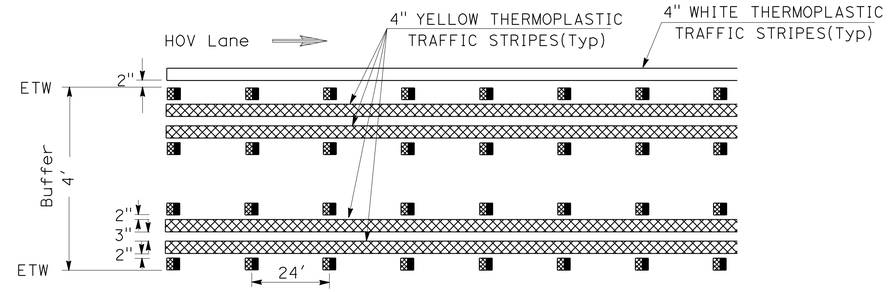

DETAIL B
4' BUFFER

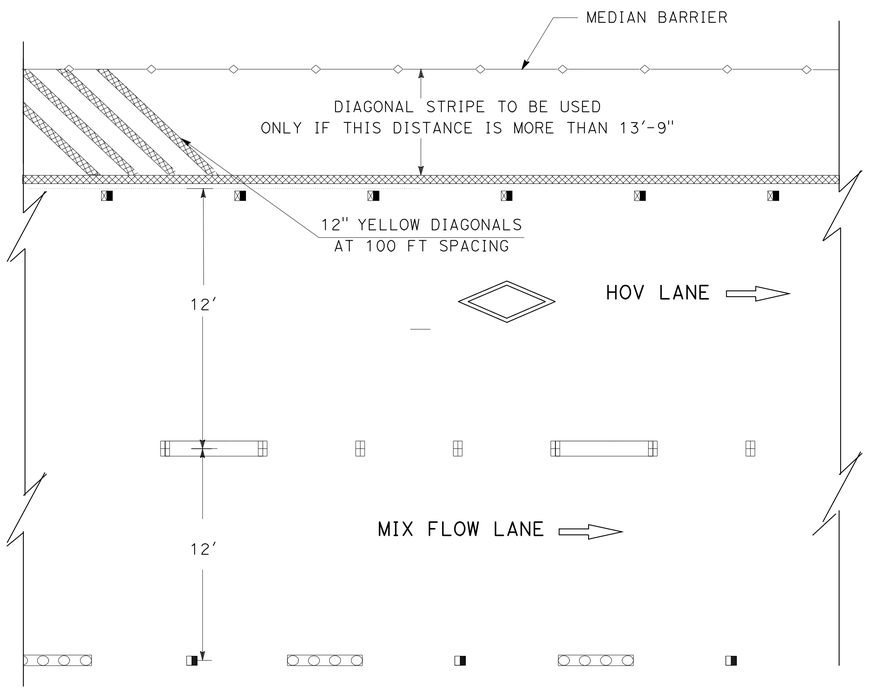

DETAIL D
DIAGONAL DETAIL

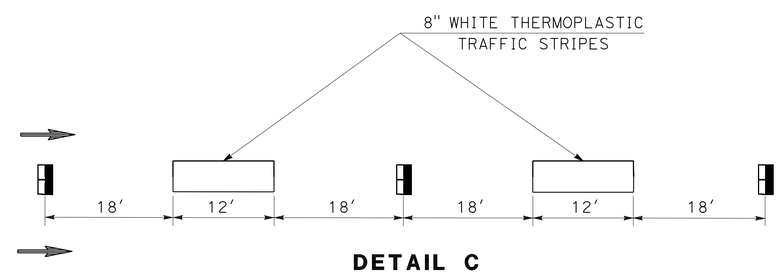

DETAIL C
INGRESS/EGRESS STRIPING
(USE TYPE C RED-CLEAR REFLECTIVE PAVEMENT MARKERS ADJACENT TO DETAIL 14Mod IN MIXED FLOW LANES)

PAVEMENT DELINEATION DETAILS (HOV STRIPING AND MARKING)

NO SCALE

PDD-3

REVISED BY	DATE REVISED
NAM TU DAO	05-04-10

RAMPHA REAO — NAM TU DAO
CALCULATED-DESIGNED BY — CHECKED BY
FUNCTIONAL SUPERVISOR — MILI LIM STAMATION

STATE OF CALIFORNIA - DEPARTMENT OF TRANSPORTATION
Caltrans® DESIGN DIVISION

LAST REVISION 05-04-10 | DATE PLOTTED => 08-JUL-2010 | TIME PLOTTED => 13:55

Dist	COUNTY	ROUTE	POST MILES TOTAL PROJECT	SHEET No.	TOTAL SHEETS
12	Ora	57	20.1/21.8	29	48

Nam Tu Dao 06-29-10
REGISTERED CIVIL ENGINEER DATE

7-6-10
PLANS APPROVAL DATE

REGISTERED PROFESSIONAL ENGINEER NAM TU DAO No. C 30349 Exp. 3/31/12 CIVIL STATE OF CALIFORNIA

THE STATE OF CALIFORNIA OR ITS OFFICERS OR AGENTS SHALL NOT BE RESPONSIBLE FOR THE ACCURACY OR COMPLETENESS OF SCANNED COPIES OF THIS PLAN SHEET.

PAVEMENT DELINEATION QUANTITIES

SHEET No.	STATION	PAINT TRAFFIC STRIPE		THERMOPLASTIC TRAFFIC STRIPE									PAVEMENT MARKER						THERMOPLASTIC PAVEMENT MARKING
		DETAIL 13 Mod 4" BLACK (2-COAT) (36'-12')	DETAIL 14 Mod 4" BLACK (2-COAT) (36'-12')	DETAIL 8 4" WHITE BROKEN (17'-7')	DETAIL 13 Mod 13A Mod 4" WHITE BROKEN (36'-12')	DETAIL 14 Mod 14A Mod 4" WHITE BROKEN (36'-12')	DET 27B 4" SOLID WHITE	HOV BUFFER 4" SOLID WHITE	DETAIL 25 4" SOLID YELLOW	HOV BUFFER 4" SOLID YELLOW	DETAIL 36, 36A 8" SOLID WHITE	DETAIL C 8" WHITE BROKEN (36'-12')	NON-REFLECTIVE	RETROREFLECTIVE					WORDS & SYMBOL
													TYPE A	TYPE C	TYPE G		TYPE H		
																HOV		HOV	
		LF	LF	LF	LF	LF	LF	LF	LF	LF	LF	LF	EA	EA	EA	EA	EA	EA	SQFT
PD-1	654+00 TO 667+00	3600	-	-	3600	-	542	100	1200	400	1066	1100	300	-	124	48	26	24	84
PD-2	667+00 TO 680+50	3618	432	-	3618	432	1100		1350		40	1350	339	12	84	58	28		84
PD-3	680+50 TO 693+50	3900	-	-	3900	-	1300		1300		-	1300	327	-	84	56	28		84
PD-4	693+50 TO 706+50	3468	432	264	3468	432	1300		1300		225	1300	327	12	84	56	28		84
PD-5	706+50 TO 719+50	3900	-	-	3900	-	1300		1300			1300	327	-	84	56	28		84
PD-6	719+50 TO 732+50	1977	-	432	3036	864	963		1300		680	1300	327	3	114	56	28		84
PD-7	732+50 TO 745+50	-	-	-	3900	-	1300		1300		-	1300	327	9	84	56	28	0	-
PD-8	745+40 TO 755+40	-	-	-	2970	-	990	-	990	-	-	990	249	-	84	43	28	0	84
SUBTOTAL		20463	1296	264	28392	1728	8795	100	10040	400	2011	9940	2523	36	724	429	222	24	588
TOTAL		21759		264	30120		19335				2011	9940	2523	1435					588

REMOVE PAVEMENT DELINEATION QUANTITIES

SHEET No.	STATION	REMOVE THERMOPLASTIC TRAFFIC STRIPE			REMOVE	
		DETAIL 25, 4" SOLID YELLOW (HAZARDOUS WASTE)	HOV BUFFER 4" SOLID YELLOW (HAZARDOUS WASTE)	4" AND 8" WHITE	THERMOPLASTIC PAVEMENT MARKING	PAVEMENT MARKER
		LF	LF	LF	SQFT	EA
PD-1	654+00 TO 667+00	1200	400	3390	168	628
PD-2	667+00 TO 680+50	1350	4412	3318	84	536
PD-3	680+50 TO 693+50	1300	5200	3575	84	631
PD-4	693+50 TO 706+50	5476		3981	84	729
PD-5	706+50 TO 719+50	1988		3097	168	616
PD-6	706+50 TO 719+50	3900		3912	84	525
PD-7	719+50 TO 732+50	3900		3575	-	618
PD-8	732+50 TO 745+40	2970		2723	-	417
SUBTOTAL		22084	10012	26370	1201	9571
TOTAL		32096		26370	1201	9571

PAVEMENT DELINEATION QUANTITIES

PDQ-1

REVISED BY	DATE REVISED	RAMPHA REAO	NAM TU DAO	NAM TU DAO	05-04-10
CALCULATED-DESIGNED BY	CHECKED BY	FUNCTIONAL SUPERVISOR	MILI LIM STAMATION		

STATE OF CALIFORNIA - DEPARTMENT OF TRANSPORTATION
Caltrans® DESIGN DIVISION

LAST REVISION 06-28-10 | DATE PLOTTED => 08-JUL-2010 | TIME PLOTTED => 13:55

Dist	COUNTY	ROUTE	POST MILES TOTAL PROJECT	SHEET No.	TOTAL SHEETS
12	Ora	57	20.1/21.8	30	48

Nam Tu Dao 06-29-10
REGISTERED CIVIL ENGINEER DATE

7-6-10
PLANS APPROVAL DATE

REGISTERED PROFESSIONAL ENGINEER
NAM TU DAO
No. C 30349
Exp. 3/31/12
CIVIL
STATE OF CALIFORNIA

THE STATE OF CALIFORNIA OR ITS OFFICERS OR AGENTS SHALL NOT BE RESPONSIBLE FOR THE ACCURACY OR COMPLETENESS OF SCANNED COPIES OF THIS PLAN SHEET.

ROADWAY ITEMS

SHEET No.	STATION	HOT MIX ASPHALT (OPEN GRADED)	TACK COAT	GRIND EXISTING CONCRETE PAVEMENT	GROOVE EXISTING CONCRETE PAVEMENT AND POLYESTER CONCRETE OVERLAY	REMOVE AC DIKE	HMA DIKE (TYPE A)	HOT MIX ASPHALT (TYPE A)	REMOVE MBGR	MBGR (WOOD POST)	TRANSITION RAILING (TYPE WB)	REMOVE CONCRETE (BLOCK)	MINOR CONCRETE (MINOR STRUCTURE)	GUARD RAILING DELINEATOR	ALTERNATIVE FLARED TERMINAL SYSTEM	END CAP (TYPE TC)
		TON	TON	SQYD	SQYD	LF	LF	TON	LF	LF	EA	CY	CY	EA	EA	EA
L-1	655+00 TO 667+00	-	-	8000	8000											
L-2	667+00 TO 680+50	-	-	9000	9000		-		27	27						
L-3	680+50 TO 693+50	-	-	7114	8987		-		25	50	1	0.5	0.75	6	1	1
L-4	693+50 TO 706+50	-	-	8667	8667		-									
L-5	706+50 TO 708+24 710+61 TO 719+50	-	-	7087	8983		-		25	50	1	0.5	0.75	6	1	1
L-6	719+50 TO 727+53	-	-	5354	5354		-									
L-6	727+53 TO 732+50	278	7	-			-									
L-7	719+50 TO 732+50	720		-			-									
L-8	732+50 TO 745+40	554		-		192	192	6								
TOTAL		1552	7	45222	48991	192	192	6	77	127	2	1	1.50	12	2	2

SUMMARY OF QUANTITIES

Q-1

STATE OF CALIFORNIA - DEPARTMENT OF TRANSPORTATION
Caltrans® DESIGN DIVISION

FUNCTIONAL SUPERVISOR: MILI LIM STAMATION
CALCULATED-DESIGNED BY: RAMPHA REAO
CHECKED BY: NAM TU DAO
REVISED BY: NAM TU DAO
DATE REVISED: 05-19-10

LAST REVISION 06-29-10 | DATE PLOTTED => 15-SEP-2010 | TIME PLOTTED => 06:32

Dist	COUNTY	ROUTE	POST MILES TOTAL PROJECT	SHEET No.	TOTAL SHEETS
12	Ora	57	20.1/21.8	31	48

Nam Tu Dao 06-02-10
REGISTERED CIVIL ENGINEER DATE

7-6-10
PLANS APPROVAL DATE

REGISTERED PROFESSIONAL ENGINEER
NAM TU DAO
No. C 30349
Exp. 3/31/12
CIVIL
STATE OF CALIFORNIA

THE STATE OF CALIFORNIA OR ITS OFFICERS OR AGENTS SHALL NOT BE RESPONSIBLE FOR THE ACCURACY OR COMPLETENESS OF SCANNED COPIES OF THIS PLAN SHEET.

ROADSIDE SIGN QUANTITIES

SHEET No.	SIGN No.	SIGN CODE	PANEL SIZE	POST SIZE	POST LENGHT	ROADSIDE SIGN ONE POST	REMOVE ROADSIDE SIGN
			INCH	INCH	LF	EA	EA
PD-1	1	G92 (CA) G28 (CA) G48 (CA) G44 (CA)	48 X 30 24 X 25 26 X 12 21 X 15	4 X 6	13.5	4	4
PD-1	2	G92 (CA) G28 (CA) G48 (CA) G43 (CA)	48 X 30 24 X 25 26 X 12 21 X 15	4 X 6	13.5	4	4
PD-5	3	G92 (CA) G28 (CA) G48 (CA) G44 (CA)	48 X 30 24 X 25 26 X 12 21 X 15	4 X 6	13.5	4	4
PD-5	4	G92 (CA) G28 (CA) G48 (CA) G43 (CA)	48 X 30 24 X 25 26 X 12 21 X 15	4 X 6	13.5	4	4
				TOTAL		16	16

MATERIAL SUMMARY - CONTRACTOR FURNISHED SIGNS

SHEET No.	SIGN No.	SIGN CODE	PANEL SIZE	SIGN AREA	SINGLE FACED	BACKGROUND		LEGEND		PROTECTIVE FILM		FURNISH	
												SINGLE SHEET UNFRAMED ALUMINUM	
						SHEETING COLOR	RETROFLECTIVE ASTM TYPE	SHEETING COLOR	RETROFLECTIVE ASTM TYPE	STANDARD	PREMIUM	0.063 INCH	0.080 INCH
			INCH	SQFT								SQFT	SQFT
PD-1	1	G92 (CA)	48 X 30	10	X	G	III	W	III	X			10
		G28 (CA)	24 X 25	4.2								4.2	
		G48 (CA)	26 X 12	2.2								2.2	
		G44 (CA)	21 X 15	2.2								2.2	
PD-1	2	G92 (CA)	48 X 30	10									10
		G28 (CA)	24 X 25	4.2								4.2	
		G48 (CA)	26 X 12	2.2								2.2	
		G43 (CA)	21 X 15	2.2								2.2	
PD-5	3	G92 (CA)	48 X 30	10									10
		G28 (CA)	24 X 25	4.2								4.2	
		G48 (CA)	26 X 12	2.2								2.2	
		G44 (CA)	21 X 15	2.2								2.2	
PD-5	4	G92 (CA)	48 X 30	10									10
		G28 (CA)	24 X 25	4.2								4.2	
		G48 (CA)	26 X 12	2.2								2.2	
		G43 (CA)	21 X 15	2.2								2.2	
TOTAL				74.4								34.4	40

SIGN QUANTITIES

SQ-1

REVISED BY	DATE REVISED
NAM TU DAO	05-04-10

CALCULATED-DESIGNED BY	CHECKED BY
RAMPHA REAO	NAM TU DAO

FUNCTIONAL SUPERVISOR: MILI LIM STAMATION

STATE OF CALIFORNIA - DEPARTMENT OF TRANSPORTATION
Caltrans® DESIGN DIVISION

LAST REVISION 05-04-10 | DATE PLOTTED => 15-SEP-2010 | TIME PLOTTED => 06:32

Dist	COUNTY	ROUTE	POST MILES TOTAL PROJECT	SHEET No.	TOTAL SHEETS
12	Ora	57	20.1/21.8	32	48

06-02-10
REGISTERED ELECTRICAL ENGINEER DATE

7-6-10
PLANS APPROVAL DATE

REGISTERED PROFESSIONAL ENGINEER
SHAHRAM SHAHRIARI
No. E13485
Exp 9/30/10
ELECTRICAL
STATE OF CALIFORNIA

THE STATE OF CALIFORNIA OR ITS OFFICERS OR AGENTS SHALL NOT BE RESPONSIBLE FOR THE ACCURACY OR COMPLETENESS OF SCANNED COPIES OF THIS PLAN SHEET.

NOTES:

1. FOR ACCURATE RIGHT OF WAY AND ACCESS DATA, CONTACT RIGHT OF WAY ENGINEERING AT THE DISTRICT OFFICE.
2. EXISTING UTILITY FACILITIES HAVE NOT BEEN PLOTTED ON THESE PLANS.

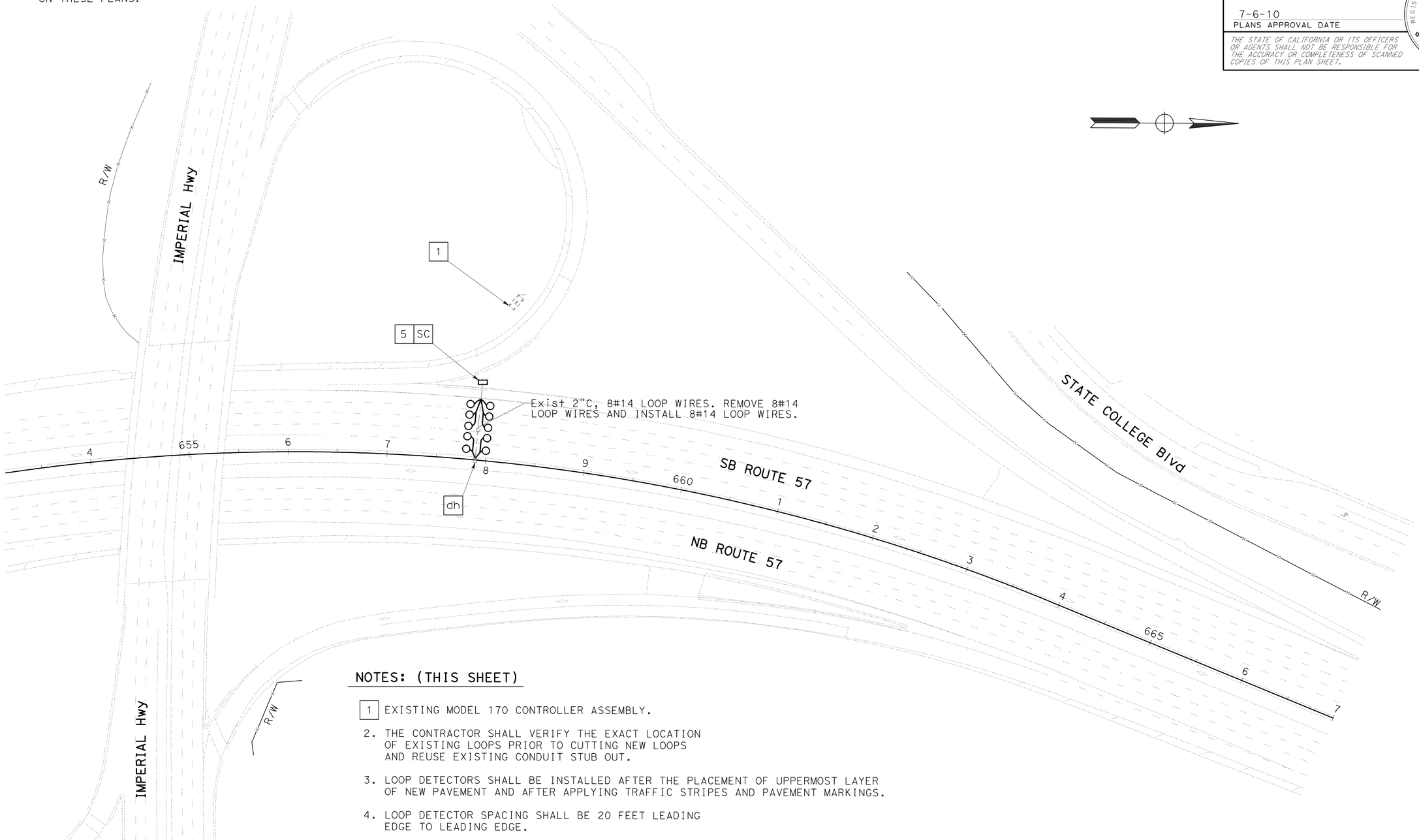

NOTES: (THIS SHEET)

1. EXISTING MODEL 170 CONTROLLER ASSEMBLY.
2. THE CONTRACTOR SHALL VERIFY THE EXACT LOCATION OF EXISTING LOOPS PRIOR TO CUTTING NEW LOOPS AND REUSE EXISTING CONDUIT STUB OUT.
3. LOOP DETECTORS SHALL BE INSTALLED AFTER THE PLACEMENT OF UPPERMOST LAYER OF NEW PAVEMENT AND AFTER APPLYING TRAFFIC STRIPES AND PAVEMENT MARKINGS.
4. LOOP DETECTOR SPACING SHALL BE 20 FEET LEADING EDGE TO LEADING EDGE.
5. RC EXISTING PULL BOX. INSTALL NEW PULL BOX.
6. AB EXISTING LOOPS WHERE NEW LOOPS ARE CUT.

INDUCTIVE LOOP DETECTOR

SCALE: 1" = 50'

E-1

THIS PLAN IS ACCURATE FOR ELECTRICAL WORK ONLY.

STATE OF CALIFORNIA - DEPARTMENT OF TRANSPORTATION
Caltrans
ELECTRICAL DESIGN

FUNCTIONAL SUPERVISOR: SHAHRAM SHAHRIARI
CALCULATED-DESIGNED BY: FRANCIS M. ALVIAR
CHECKED BY: VANESSA V. TRUONG
REVISED BY
DATE REVISED

LAST REVISION 06-01-10
DATE PLOTTED => 15-SEP-2010
TIME PLOTTED => 06:32

Dist	COUNTY	ROUTE	POST MILES TOTAL PROJECT	SHEET No.	TOTAL SHEETS
12	Ora	57	20.1/21.8	33	48

06-02-10
REGISTERED ELECTRICAL ENGINEER DATE

7-6-10
PLANS APPROVAL DATE

REGISTERED PROFESSIONAL ENGINEER
SHAHRAM SHAHRIARI
No. E13485
Exp 9/30/10
ELECTRICAL
STATE OF CALIFORNIA

THE STATE OF CALIFORNIA OR ITS OFFICERS OR AGENTS SHALL NOT BE RESPONSIBLE FOR THE ACCURACY OR COMPLETENESS OF SCANNED COPIES OF THIS PLAN SHEET.

NOTES:

1. FOR ACCURATE RIGHT OF WAY AND ACCESS DATA, CONTACT RIGHT OF WAY ENGINEERING AT THE DISTRICT OFFICE.
2. EXISTING UTILITY FACILITIES HAVE NOT BEEN PLOTTED ON THESE PLANS.

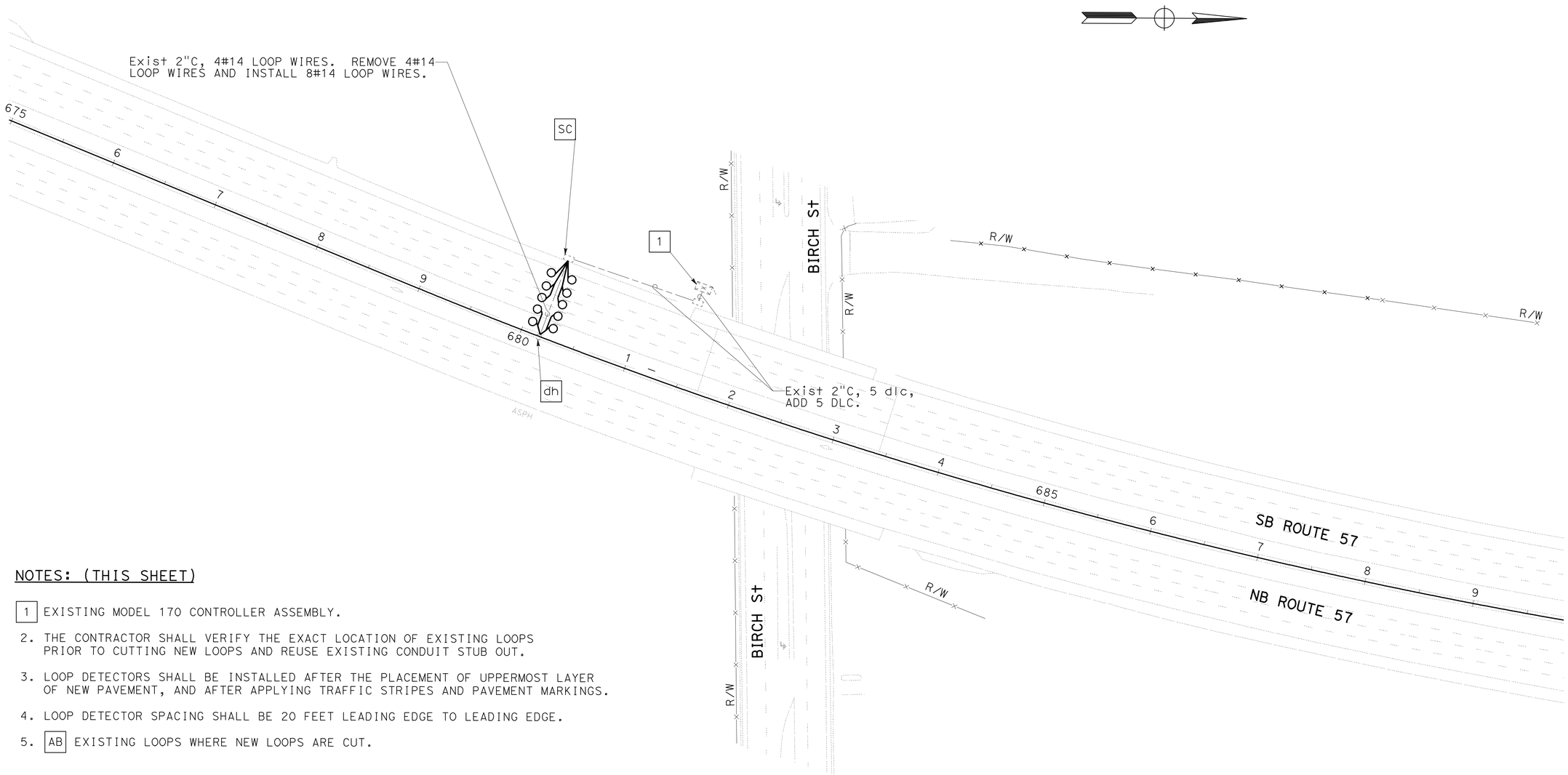

NOTES: (THIS SHEET)

1. EXISTING MODEL 170 CONTROLLER ASSEMBLY.
2. THE CONTRACTOR SHALL VERIFY THE EXACT LOCATION OF EXISTING LOOPS PRIOR TO CUTTING NEW LOOPS AND REUSE EXISTING CONDUIT STUB OUT.
3. LOOP DETECTORS SHALL BE INSTALLED AFTER THE PLACEMENT OF UPPERMOST LAYER OF NEW PAVEMENT, AND AFTER APPLYING TRAFFIC STRIPES AND PAVEMENT MARKINGS.
4. LOOP DETECTOR SPACING SHALL BE 20 FEET LEADING EDGE TO LEADING EDGE.
5. AB EXISTING LOOPS WHERE NEW LOOPS ARE CUT.

INDUCTIVE LOOP DETECTOR

SCALE: 1" = 50'

E-2

THIS PLAN IS ACCURATE FOR ELECTRICAL WORK ONLY.

STATE OF CALIFORNIA - DEPARTMENT OF TRANSPORTATION
Caltrans
ELECTRICAL DESIGN

FUNCTIONAL SUPERVISOR: SHAHRAM SHAHRIARI
CALCULATED-DESIGNED BY: FRANCIS M. ALVIAR
CHECKED BY: VANESSA V. TRUONG
REVISED BY
DATE REVISED

LAST REVISION 06-01-10
DATE PLOTTED => 08-JUL-2010
TIME PLOTTED => 14:03

Dist	COUNTY	ROUTE	POST MILES TOTAL PROJECT	SHEET No.	TOTAL SHEETS
12	Ora	57	20.1/21.8	34	48

06-02-10
REGISTERED ELECTRICAL ENGINEER DATE

7-6-10
PLANS APPROVAL DATE

REGISTERED PROFESSIONAL ENGINEER
SHAHRAM SHAHRIARI
No. E13485
Exp 9/30/10
ELECTRICAL
STATE OF CALIFORNIA

THE STATE OF CALIFORNIA OR ITS OFFICERS OR AGENTS SHALL NOT BE RESPONSIBLE FOR THE ACCURACY OR COMPLETENESS OF SCANNED COPIES OF THIS PLAN SHEET.

NOTES:

1. FOR ACCURATE RIGHT OF WAY AND ACCESS DATA, CONTACT RIGHT OF WAY ENGINEERING AT THE DISTRICT OFFICE.
2. EXISTING UTILITY FACILITIES HAVE NOT BEEN PLOTTED ON THESE PLANS.

NOTES: (THIS SHEET)

1. [1] EXISTING MODEL 170 CONTROLLER ASSEMBLY.
2. THE CONTRACTOR SHALL VERIFY THE EXACT LOCATION OF EXISTING LOOPS PRIOR TO CUTTING NEW LOOPS AND REUSE EXISTING CONDUIT STUB OUT.
3. LOOP DETECTORS SHALL BE INSTALLED AFTER THE PLACEMENT OF UPPERMOST LAYER OF NEW PAVEMENT, AND AFTER APPLYING TRAFFIC STRIPES AND PAVEMENT MARKINGS.
4. LOOP DETECTOR SPACING SHALL BE 20 FEET LEADING EDGE TO LEADING EDGE.
5. [AB] EXISTING LOOPS WHERE NEW LOOPS ARE CUT.

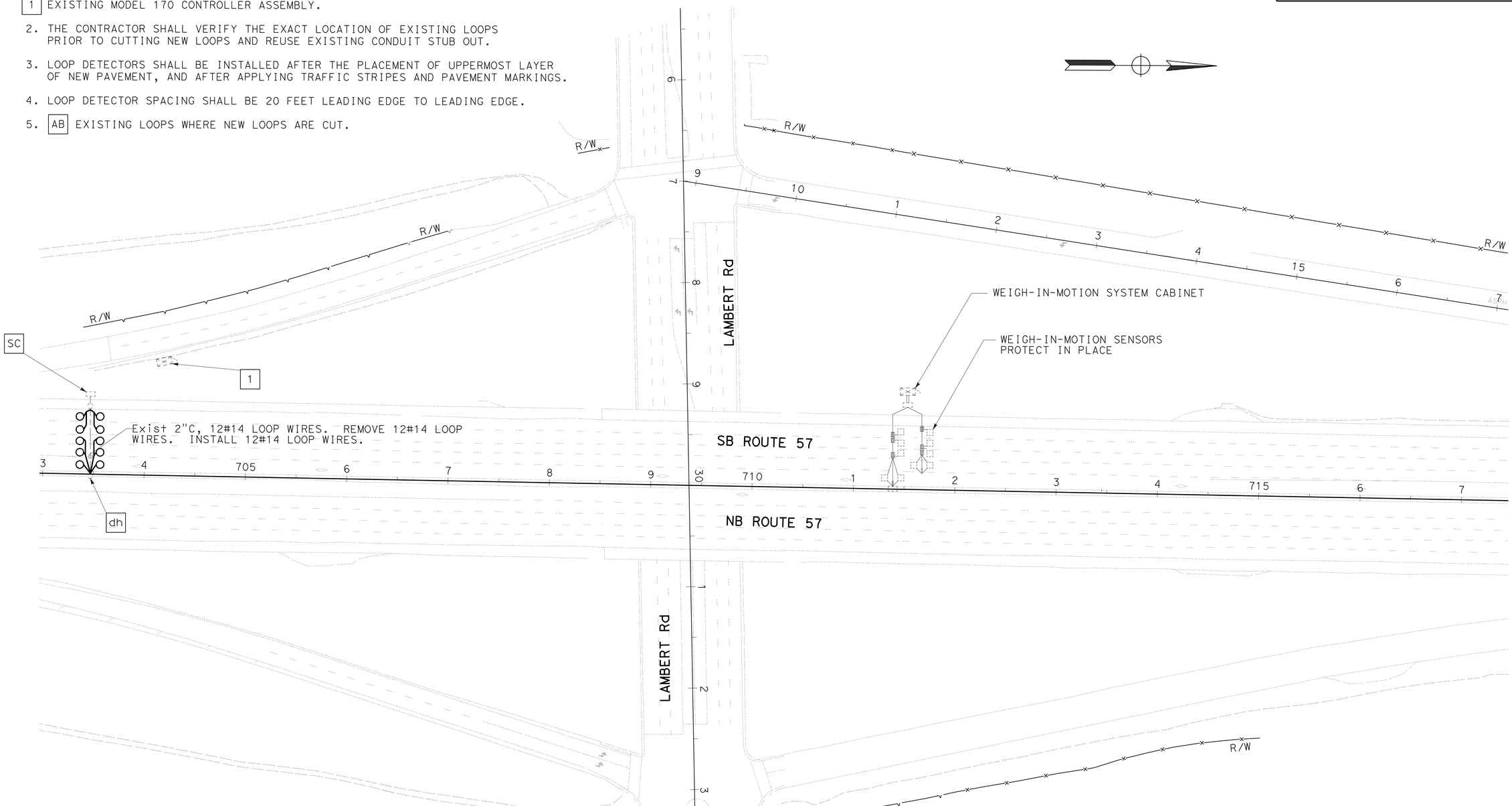

THIS PLAN IS ACCURATE FOR ELECTRICAL WORK ONLY.

INDUCTIVE LOOP DETECTOR

SCALE: 1" = 50'

E-3

STATE OF CALIFORNIA - DEPARTMENT OF TRANSPORTATION
Caltrans
ELECTRICAL DESIGN

FUNCTIONAL SUPERVISOR: SHAHRAM SHAHRIARI
CALCULATED-DESIGNED BY: FRANCIS M. ALVIAR
CHECKED BY: VANESSA V. TRUONG
REVISED BY / DATE REVISED

LAST REVISION 06-01-10
DATE PLOTTED => 09-JUL-2010
TIME PLOTTED => 09:14

DIST	COUNTY	ROUTE	POST MILES TOTAL PROJECT	SHEET NO.	TOTAL SHEETS
12	Ora	57	20.1/21.8	35	48

REGISTERED CIVIL ENGINEER

June 6, 2008
PLANS APPROVAL DATE

REGISTERED PROFESSIONAL ENGINEER
Donald E. Howe
No. C46402
Exp. 3-31-09
CIVIL
STATE OF CALIFORNIA

The State of California or its officers or agents shall not be responsible for the accuracy or completeness of electronic copies of this plan sheet.

To accompany plans dated 7-6-10

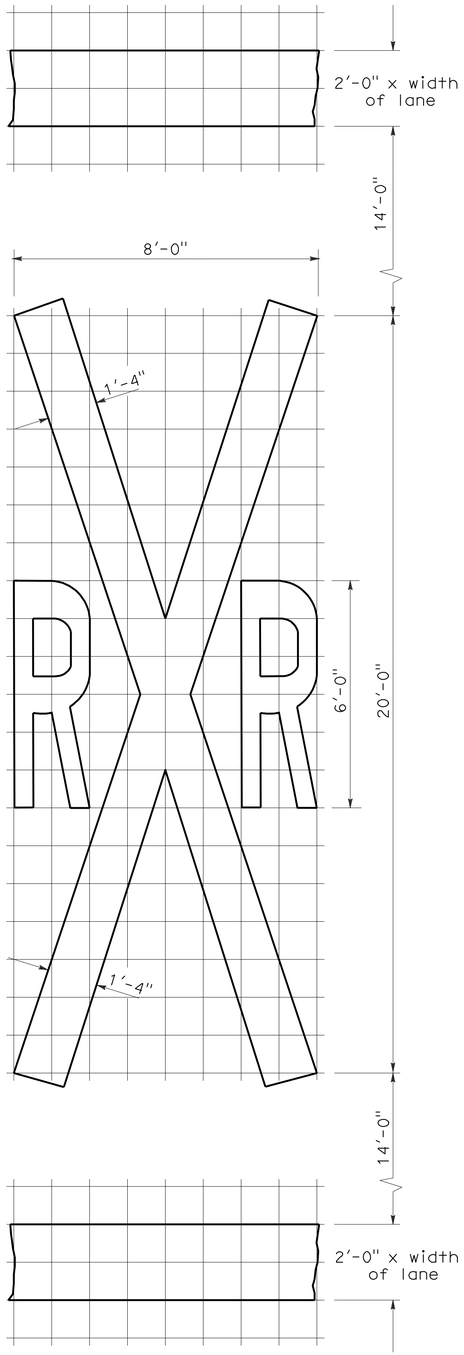

RAILROAD CROSSING SYMBOL

✳70 sq ft DOES NOT INCLUDE THE 2'-0" x VARIABLE WIDTH TRANSVERSE LINES.

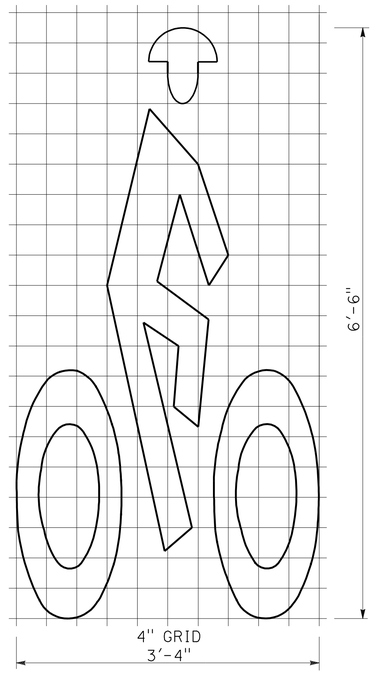

BIKE LANE SYMBOL

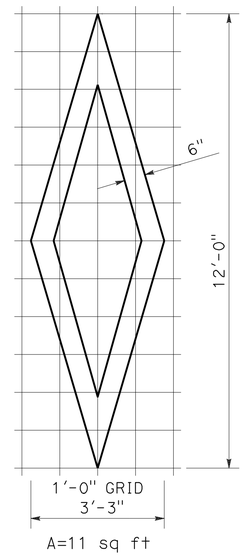

DIAMOND SYMBOL

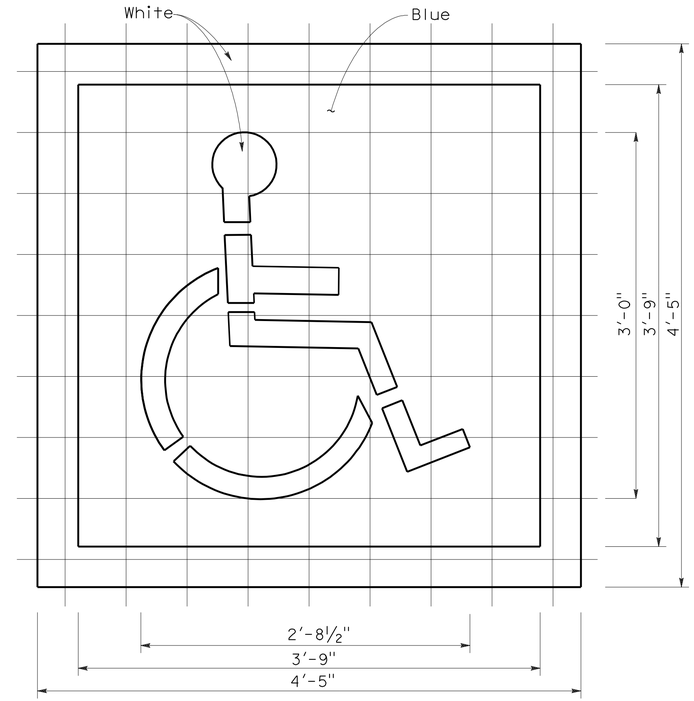

INTERNATIONAL SYMBOL OF ACCESSIBILITY MARKING

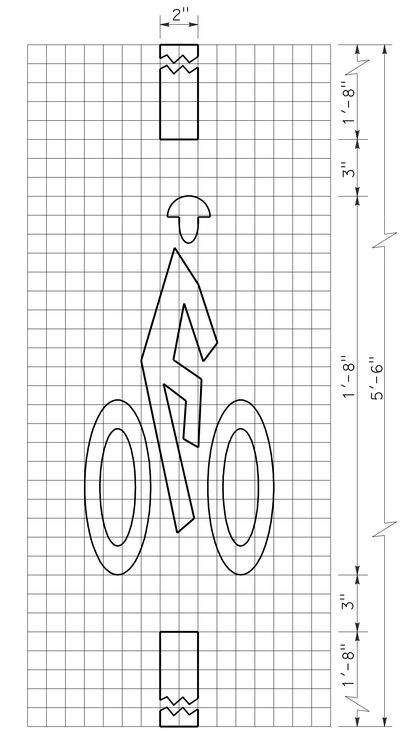

BICYCLE LOOP DETECTOR SYMBOL

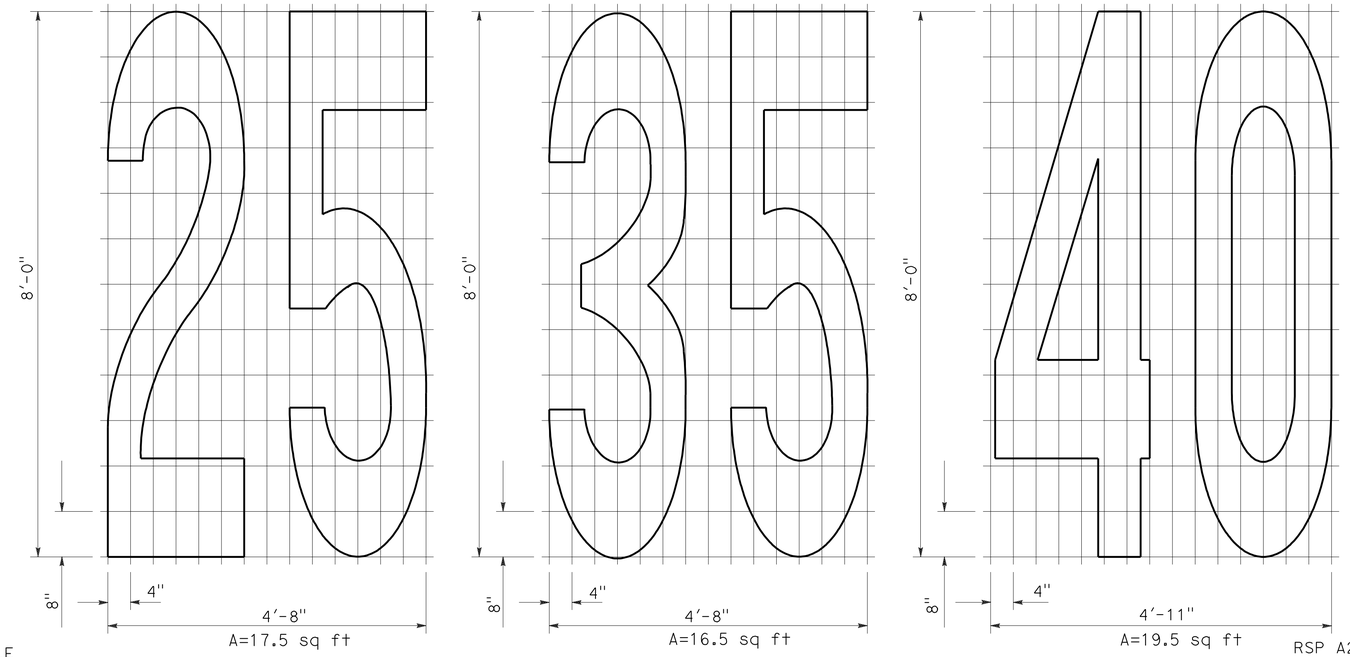

NUMERALS

NOTE:

1. Minor variations in dimensions may be accepted by the Engineer.

STATE OF CALIFORNIA
DEPARTMENT OF TRANSPORTATION

PAVEMENT MARKINGS SYMBOLS AND NUMERALS

NO SCALE

RSP A24C DATED JUNE 6, 2008 SUPERSEDES STANDARD PLAN A24C DATED MAY 1, 2006 - PAGE 11 OF THE STANDARD PLANS BOOK DATED MAY 2006.

REVISED STANDARD PLAN RSP A24C

2006 REVISED STANDARD PLAN RSP A24C

5-27-08

DIST	COUNTY	ROUTE	POST MILES TOTAL PROJECT	SHEET NO.	TOTAL SHEETS
12	Ora	57	20.1/21.8	36	48

Randell D. Hiatt
REGISTERED CIVIL ENGINEER

June 5, 2009
PLANS APPROVAL DATE

REGISTERED PROFESSIONAL ENGINEER
Randell D. Hiatt
No. C50200
Exp. 6-30-09
CIVIL
STATE OF CALIFORNIA

The State of California or its officers or agents shall not be responsible for the accuracy or completeness of electronic copies of this plan sheet.

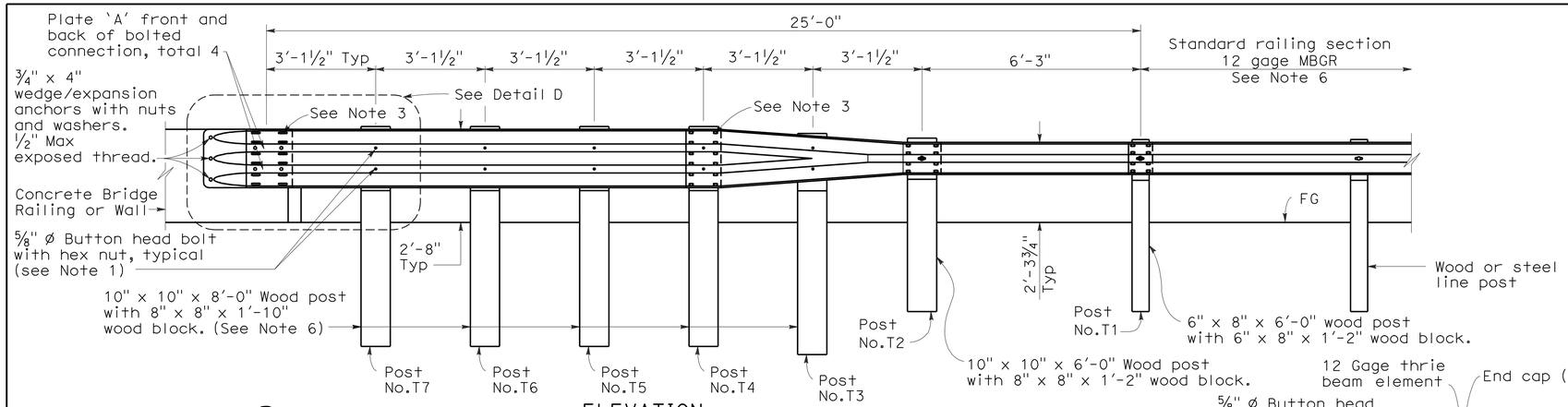

ELEVATION

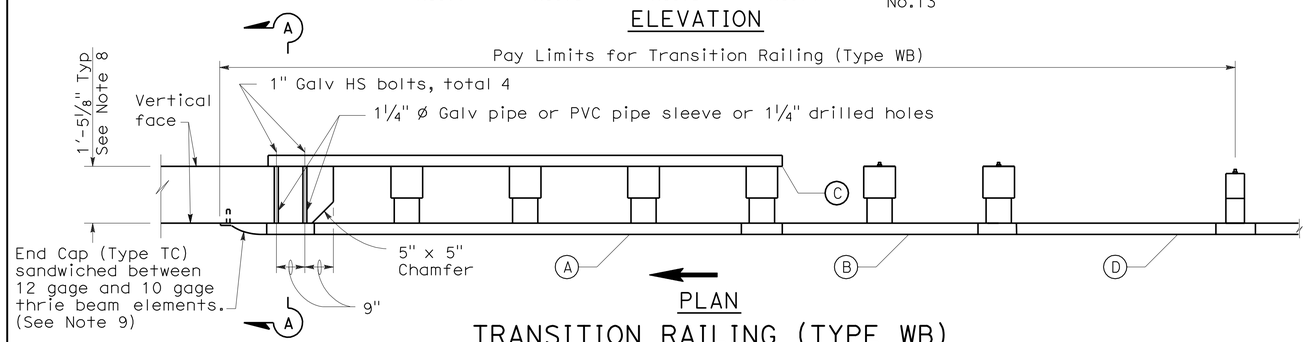

PLAN

TRANSITION RAILING (TYPE WB)

(No Blockout Attachment)

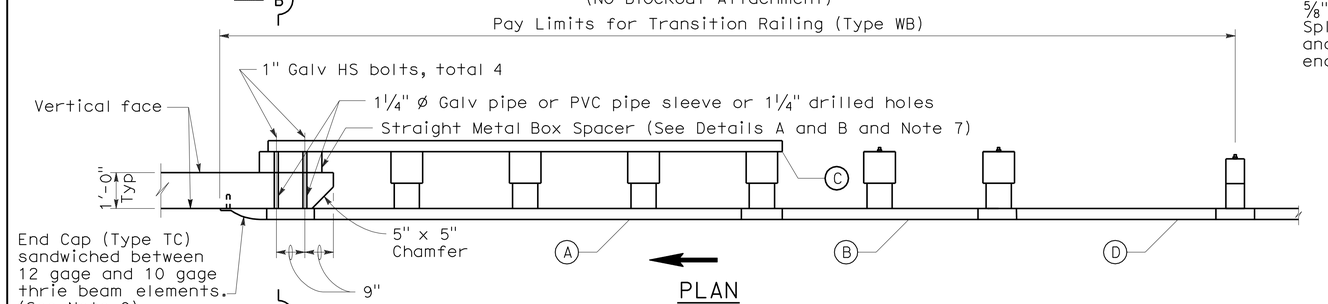

PLAN

TRANSITION RAILING (TYPE WB)

(Blockout Attachment)

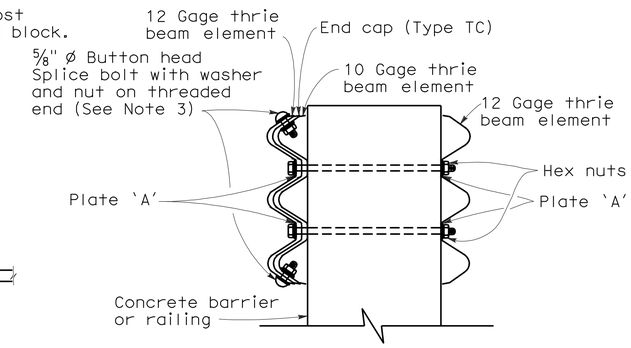

SECTION A-A

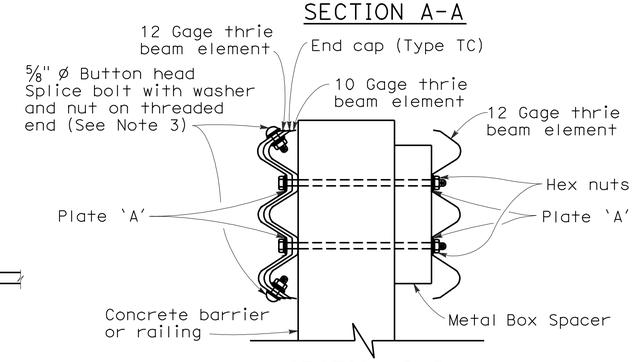

SECTION B-B

LEGEND

(A) Nested thrie beam elements (one 12 gage element nested over one 10 gage element).

(B) One 10 gage "W" beam to thrie beam element.

(C) One 12 gage thrie beam element.

(D) One 10 gage "W" beam rail element (7'-3½" length)

10 gage = 0.135" thick

12 gage = 0.108" thick

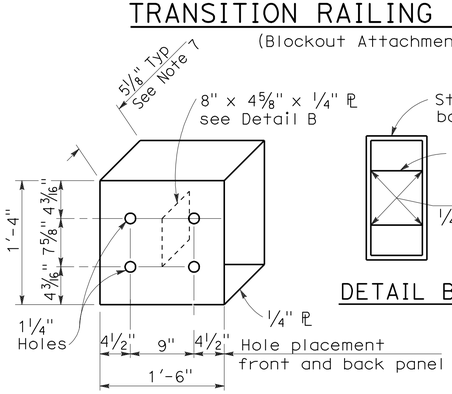

DETAIL A

STRAIGHT METAL BOX SPACER

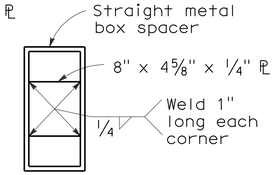

DETAIL B

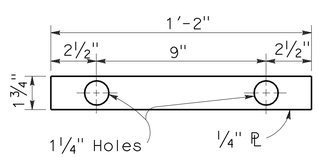

DETAIL C

PLATE 'A'

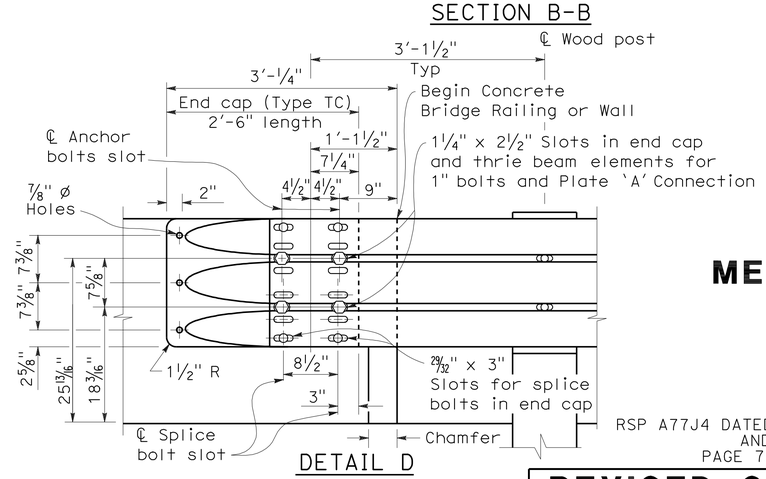

DETAIL D

NOTES:

To accompany plans dated 7-6-10

1. Use 5/8 " ø Button head bolts and hex nuts for connections to posts. No washer on rail face for bolted connections to post.
2. The nested rail elements, end cap, and 'W' beam to thrie beam element may be spliced together prior to bolting the elements to the wood post and concrete barrier or railing.
3. Exterior splice bolt holes for rail element splices at Post No.T4 and the connection to the concrete barrier or railing shall be the standard 29/32 " x 1 1/8 " slot size. Interior splice bolt holes at these locations may be increased up to 1 1/4 " ø. Only the top 2 and the bottom 2 splice bolts with washers and nuts are required for rail splices at Post No.T4 and the connection to the concrete barrier or railing.
4. Direction of adjacent traffic indicated by →.
5. The top elevation of Post Nos.T2 through T7 shall not project more than 1" above the top elevation of the rail element.
6. Typically, the railing connected to Transition Railing (Type WB) will be either standard railing section of metal beam guard railing or an approved Caltrans end treatment attached to Post No.T1.
7. The depth of the metal box spacer varies from the 5 1/8 " to 1 1/2 " and is dependent on the width of the concrete railing or wall. The combined dimension for the depth of the metal box spacer plus the width of railing or wall is typically 17 1/8 ". Where the space between the backside of the concrete railing or wall and the rear thrie beam element is less than 1 1/2 ", metal plates similar to Plate 'A' are to be used as spacers.
8. Where the width of the concrete railing or wall is greater than 17 1/8 ", wood blocks are to be used to fill the space created between the backside of Posts No.4 through No.7 and the rear thrie beam element. These wood blocks shall be 8" in width and 1'-2" in length. The dimension between the front thrie beam element and the rear thrie beam element is to match the width of the concrete railing or wall.
9. End cap may be installed over 12 gage and 10 gage thrie beam elements where transition railing is installed on the departure end of bridge railing.

STATE OF CALIFORNIA
DEPARTMENT OF TRANSPORTATION

METAL BEAM GUARD RAILING TRANSITION RAILING (TYPE WB)

NO SCALE

RSP A77J4 DATED JUNE 5, 2009 SUPERSEDES RSP A77J4 DATED JUNE 6, 2008 AND STANDARD PLAN A77J4 DATED MAY 1, 2006 - PAGE 75 OF THE STANDARD PLANS BOOK DATED MAY 2006.

REVISED STANDARD PLAN RSP A77J4

2006 REVISED STANDARD PLAN RSP A77J4

5-14-09

DIST	COUNTY	ROUTE	POST MILES TOTAL PROJECT	SHEET NO.	TOTAL SHEETS
12	Ora	57	20.1/21.8	37	48

Randell D. Hiatt
REGISTERED CIVIL ENGINEER

June 6, 2008
PLANS APPROVAL DATE

REGISTERED PROFESSIONAL ENGINEER
Randell D. Hiatt
No. C50200
Exp. 6-30-09
CIVIL
STATE OF CALIFORNIA

The State of California or its officers or agents shall not be responsible for the accuracy or completeness of electronic copies of this plan sheet.

To accompany plans dated 7-6-10

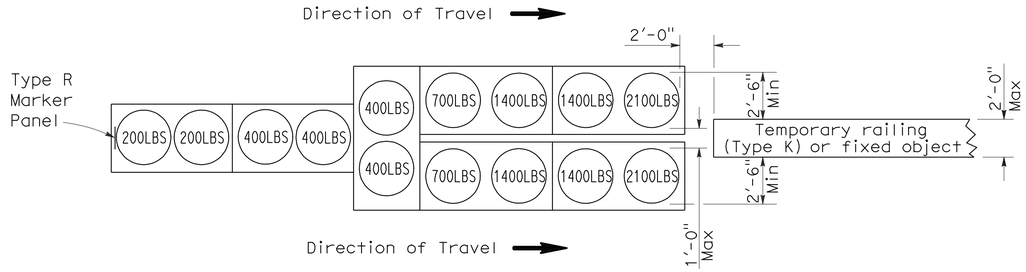

ARRAY 'TU14'

Approach speed 45 mph or more

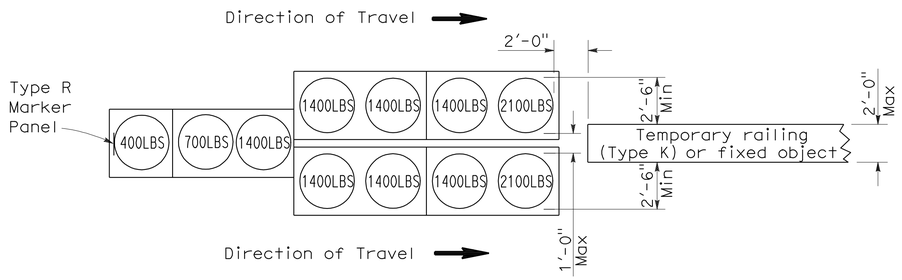

ARRAY 'TU11'

Approach speed less than 45 mph

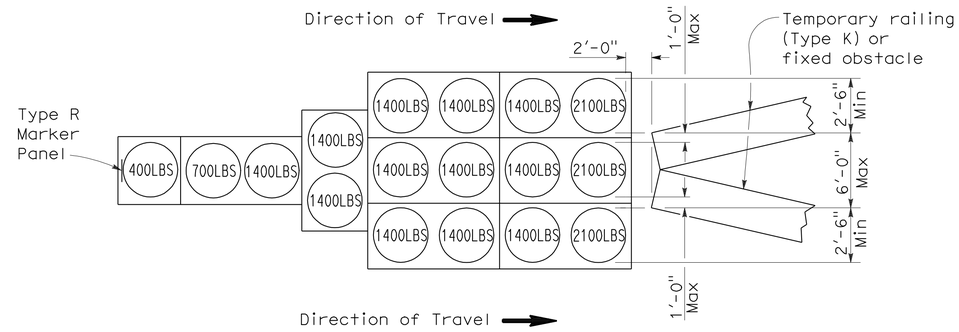

ARRAY 'TU17'

Approach speed less than 45 mph

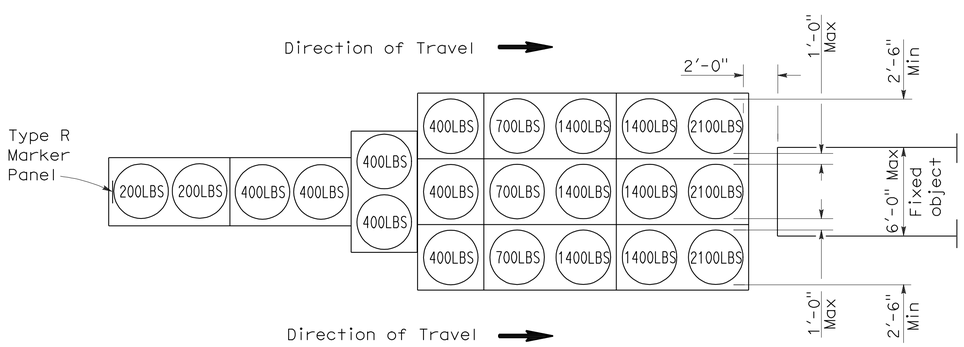

ARRAY 'TU21'

Approach speed 45 mph or more

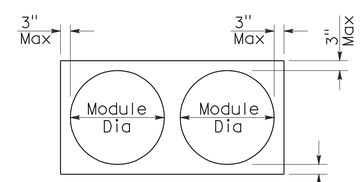

PLAN

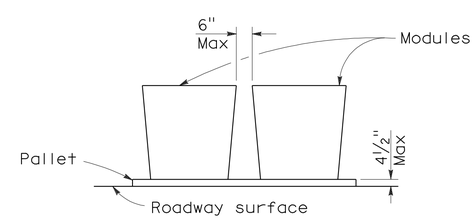

ELEVATION

CRASH CUSHION PALLET DETAIL

See Note 7

NOTES:

1. (XXX) Indicates sand filled module location and weight of sand in pounds for each module. Module spacing is based on the greater diameter of the module.
2. All sand weights are nominal.
3. Temporary crash cushion arrays shall not encroach on the traveled way.
4. Place the top of Type R marker panel 1" below the module lid.
5. Refer to Standard Plan A73B for marker details.
6. Approach speeds indicated conform to NCHRP 350 Report criteria.
7. Use of pallets is optional.

STATE OF CALIFORNIA
DEPARTMENT OF TRANSPORTATION

TEMPORARY CRASH CUSHION, SAND FILLED (UNIDIRECTIONAL)

NO SCALE

RSP T1A DATED JUNE 6, 2008 SUPERSEDES STANDARD PLAN T1A
DATED MAY 1, 2006 - PAGE 211 OF THE STANDARD PLANS BOOK DATED MAY 2006.

REVISED STANDARD PLAN RSP T1A

2006 REVISED STANDARD PLAN RSP T1A

DIST	COUNTY	ROUTE	POST MILES TOTAL PROJECT	SHEET NO.	TOTAL SHEETS
12	Ora	57	20.1/21.8	38	48

Randell D. Hiatt
REGISTERED CIVIL ENGINEER

June 6, 2008
PLANS APPROVAL DATE

REGISTERED PROFESSIONAL ENGINEER
Randell D. Hiatt
No. C50200
Exp. 6-30-09
CIVIL
STATE OF CALIFORNIA

The State of California or its officers or agents shall not be responsible for the accuracy or completeness of electronic copies of this plan sheet.

To accompany plans dated 7-6-10

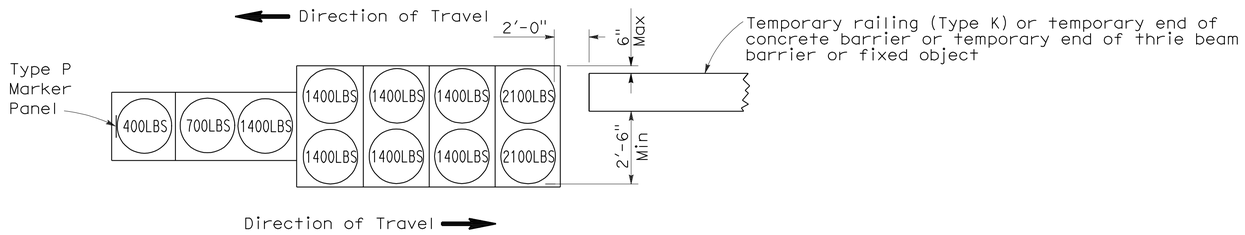

ARRAY 'TB11'

Approach speed less than 45 mph

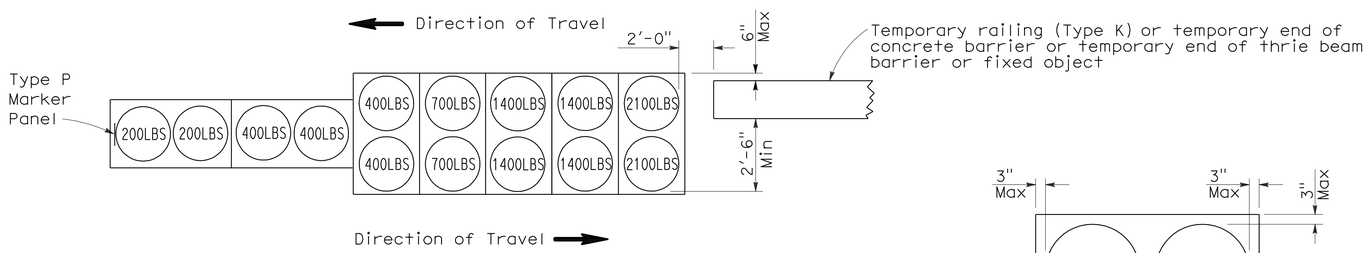

ARRAY 'TB14'

Approach speed 45 mph or more

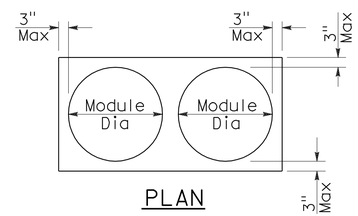

PLAN

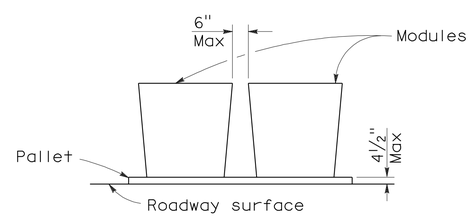

ELEVATION

CRASH CUSHION PALLET DETAIL

See Note 7

NOTES:

1. (XXX) Indicates sand filled module location and weight of sand in pounds for each module. Module spacing is based on the greater diameter of the module.
2. All sand weights are nominal.
3. Temporary crash cushion arrays shall not encroach on the traveled way.
4. Place the Type P marker panel so that the bottom of the panel rests upon the pallet.
5. Refer to Standard Plan A73B for marker details.
6. Approach speeds indicated conform to NCHRP 350 Report criteria.
7. Use of pallets is optional.

STATE OF CALIFORNIA
DEPARTMENT OF TRANSPORTATION

TEMPORARY CRASH CUSHION, SAND FILLED (BIDIRECTIONAL)

NO SCALE

RSP T1B DATED JUNE 6, 2008 SUPERSEDES STANDARD PLAN T1B
DATED MAY 1, 2006 - PAGE 212 OF THE STANDARD PLANS BOOK DATED MAY 2006.

REVISED STANDARD PLAN RSP T1B

2006 REVISED STANDARD PLAN RSP T1B

5-15-08

DIST	COUNTY	ROUTE	POST MILES TOTAL PROJECT	SHEET NO.	TOTAL SHEETS
12	Ora	57	20.1/21.8	39	48

Randell D. Hiatt
REGISTERED CIVIL ENGINEER

June 6, 2008
PLANS APPROVAL DATE

REGISTERED PROFESSIONAL ENGINEER
Randell D. Hiatt
No. C50200
Exp. 6-30-09
CIVIL
STATE OF CALIFORNIA

The State of California or its officers or agents shall not be responsible for the accuracy or completeness of electronic copies of this plan sheet.

To accompany plans dated 7-6-10

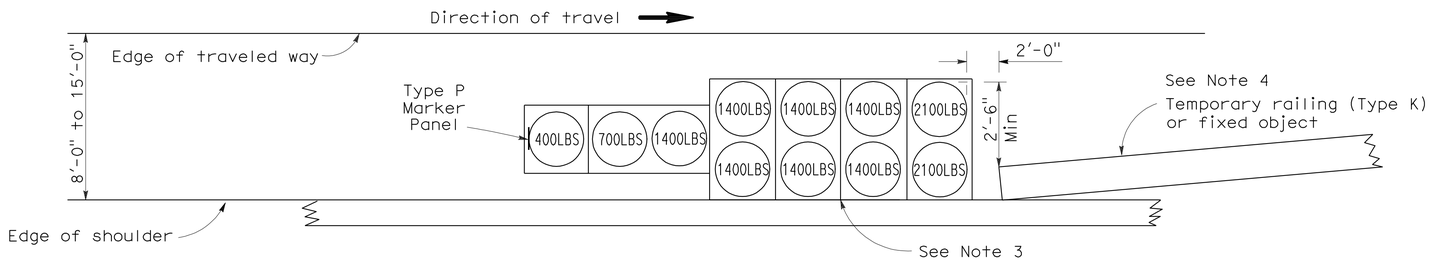

ARRAY 'TS11'

Approach speed less than 45 mph
See Note 9

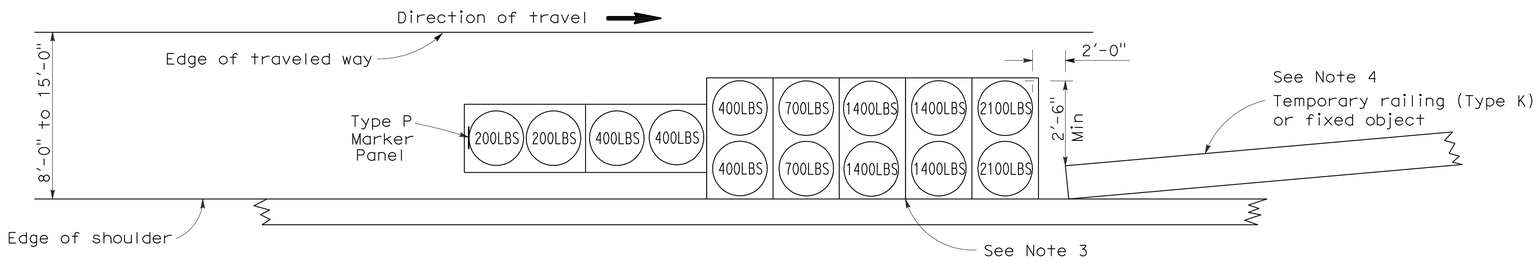

ARRAY 'TS14'

Approach speed 45 mph or more
See Note 9

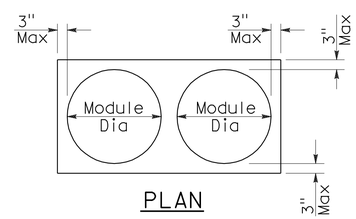

PLAN

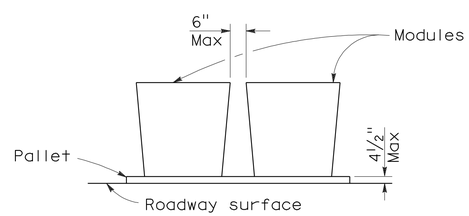

ELEVATION

CRASH CUSHION PALLET DETAIL

See Note 11

NOTES:

1. (XXX) Indicates sand filled module location and weight of sand in pounds for each module. Module spacing is based on the greater diameter of the module.
2. All sand weights are nominal.
3. The temporary crash cushion arrays shown on this plan shall be used only in locations where there will be traffic on one side of the temporary crash cushion array.
4. If the fixed object or approach end of the temporary railing is less than 15'-0" from the edge of traveled way, a temporary crash cushion is required in a construction or work zone.
5. Temporary crash cushion arrays shall not encroach on the traveled way.
6. Arrays for median shoulders shall conform to details shown on this plan for outside shoulders.
7. Place the Type P marker panel so that the bottom of the panel rests upon the pallet and faces traffic.
8. Refer to Standard Plan A73B for marker details.
9. For shoulder widths less than 8'-0", appropriate approved crash cushion protection, other than sand filled modules, shall be provided at fixed objects and at approach ends of temporary railing. The specific type of crash cushion shall be as shown on the project plans or as specified in the Special Provisions, or if not shown on the project plans or specified in the Special Provisions, shall be as approved by the Engineer.
10. Approach speeds indicated conform to NCHRP 350 Report criteria.
11. Use of pallets is optional.

STATE OF CALIFORNIA
DEPARTMENT OF TRANSPORTATION

TEMPORARY CRASH CUSHION, SAND FILLED (SHOULDER INSTALLATIONS)

NO SCALE

RSP T2 DATED JUNE 6, 2008 SUPERSEDES STANDARD PLAN T2
DATED MAY 1, 2006 - PAGE 213 OF THE STANDARD PLANS BOOK DATED MAY 2006.

REVISED STANDARD PLAN RSP T2

2006 REVISED STANDARD PLAN RSP T2

5-15-08

DIST	COUNTY	ROUTE	POST MILES TOTAL PROJECT	SHEET NO.	TOTAL SHEETS
12	Ora	57	20.1/21.8	40	48

Robert B Schott
LICENSED LANDSCAPE ARCHITECT

August 15, 2008
PLANS APPROVAL DATE

LICENSED LANDSCAPE ARCHITECT Robert B. Schott 3025 Signature 11-04-08 Renewal Date 08-11-08 Date STATE OF CALIFORNIA

The State of California or its officers or agents shall not be responsible for the accuracy or completeness of electronic copies of this plan sheet.

To accompany plans dated 7-6-10

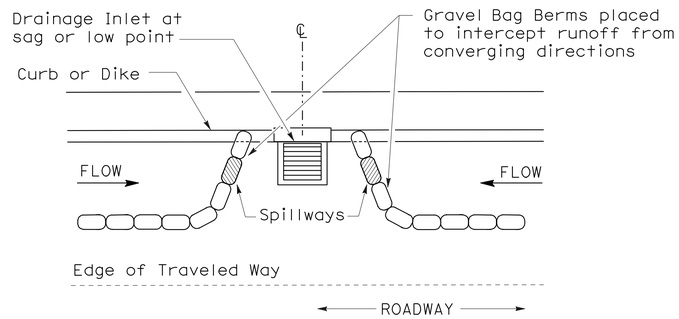

PLAN

CONFIGURATION FOR SAG POINT INLET (GRAVEL BAG BERM)

GRAVEL BAG BERM (TYPE 3A) SPACING TABLE

SLOPE OF ROADWAY (PERCENT)	1 to 3.9	4 to 5.9	6 to 7.9	8 to 10	10+
INTERVAL BETWEEN BERM	100′	75′	50′	25′	12′

For slope of less than 1%, install barriers only if erosion/sediment is prevalent

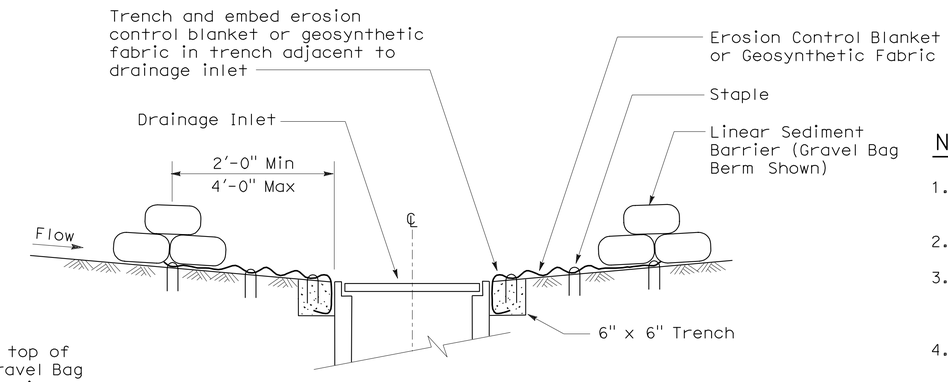

SECTION A-A

NOTES:

1. Place safety cones adjacent to drainage inlet protection.
2. Dimensions may vary to fit field conditions.
3. Install a minimum of 3 gravel bag berms upstream of each drainage inlet to be protected.
4. Position erosion control blanket or geosynthetic fabric at edge of concrete apron and secure in trench.
5. Erosion control blanket or geosynthetic fabric is not required if the area adjacent to the drainage inlet is vegetated or paved.

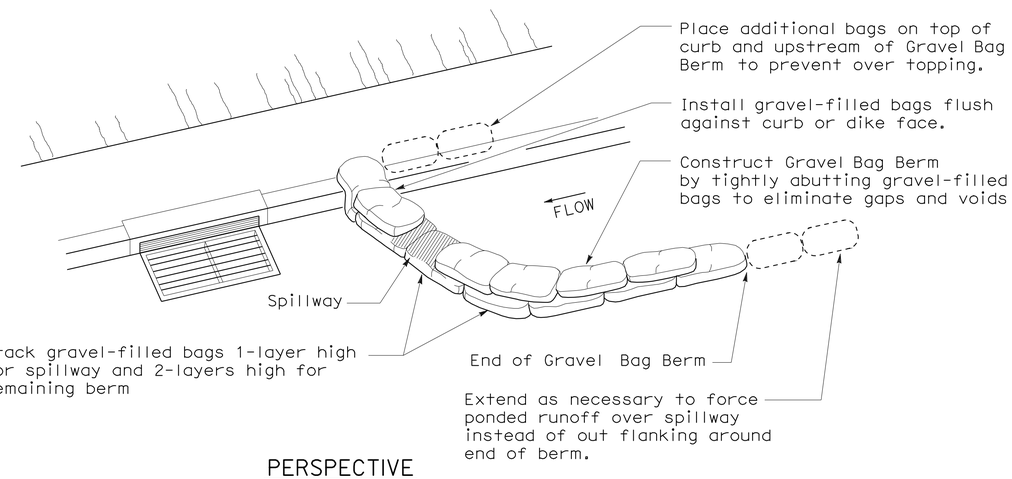

PERSPECTIVE

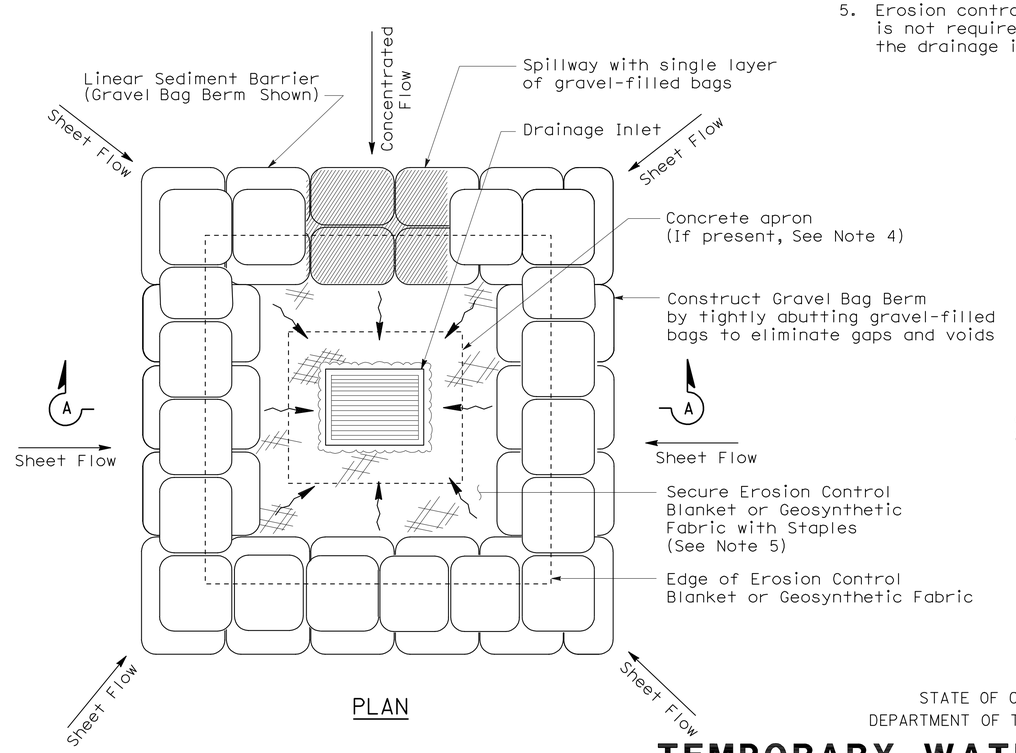

PLAN

TEMPORARY DRAINAGE INLET PROTECTION (TYPE 3B)

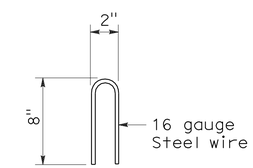

STAPLE DETAIL

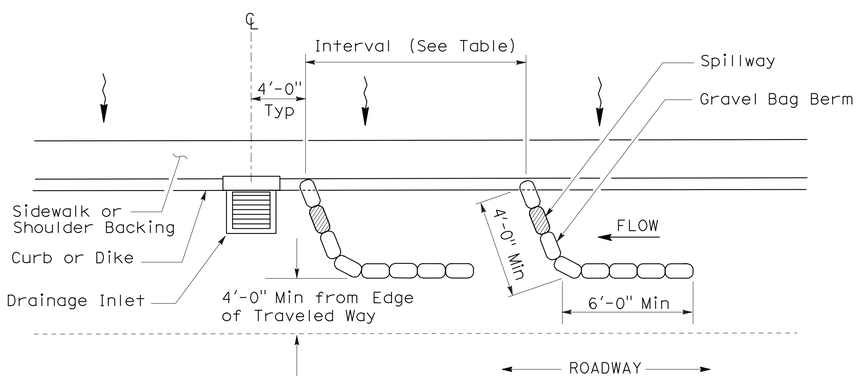

PLAN

TEMPORARY DRAINAGE INLET PROTECTION (TYPE 3A) (GRAVEL BAG BERM)

STATE OF CALIFORNIA
DEPARTMENT OF TRANSPORTATION

TEMPORARY WATER POLLUTION CONTROL DETAILS (TEMPORARY DRAINAGE INLET PROTECTION)

NO SCALE

NSP T62 DATED AUGUST 15, 2008 SUPPLEMENTS THE STANDARD PLANS BOOK DATED MAY 2006.

NEW STANDARD PLAN NSP T62

2006 NEW STANDARD PLAN NSP T62

DIST	COUNTY	ROUTE	POST MILES TOTAL PROJECT	SHEET NO.	TOTAL SHEETS
12	Ora	57	20.1/21.8	41	48

REGISTERED CIVIL ENGINEER

October 5, 2007
PLANS APPROVAL DATE

REGISTERED PROFESSIONAL ENGINEER Efthymios Delis No. C51434 Exp. 6-30-08 CIVIL STATE OF CALIFORNIA

The State of California or its officers or agents shall not be responsible for the accuracy or completeness of electronic copies of this plan sheet.

To accompany plans dated 7-6-10

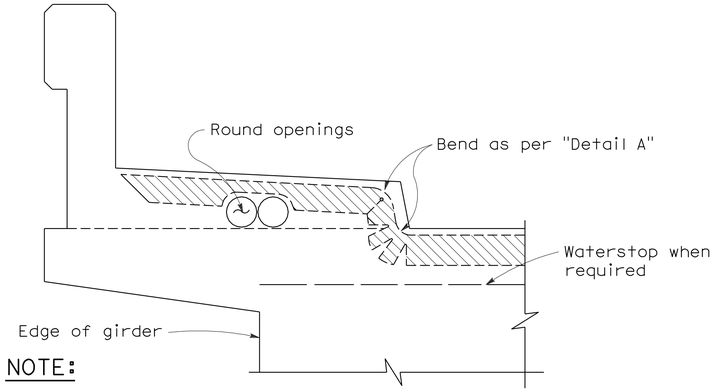

NOTE:

Type "B" seal shown. Type "A" seals to comform to the general path of seal shown, cuts for bending not required. Bend Type "A" seals 3" up into curb or barrier rail on only the low end of the seal.

CONCRETE BARRIER AND SIDEWALK

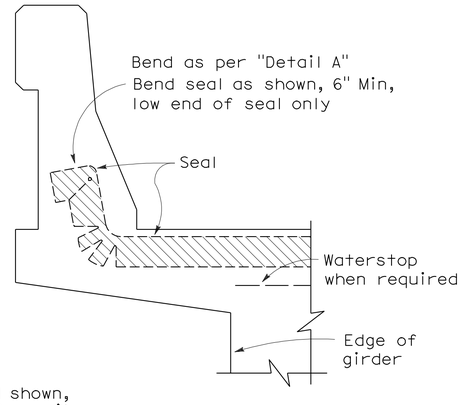

CONCRETE BARRIER

JOINT SEALS DETAILS

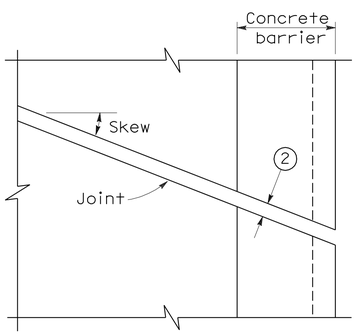

PLAN OF JOINT (SKEW ≤ 20°)

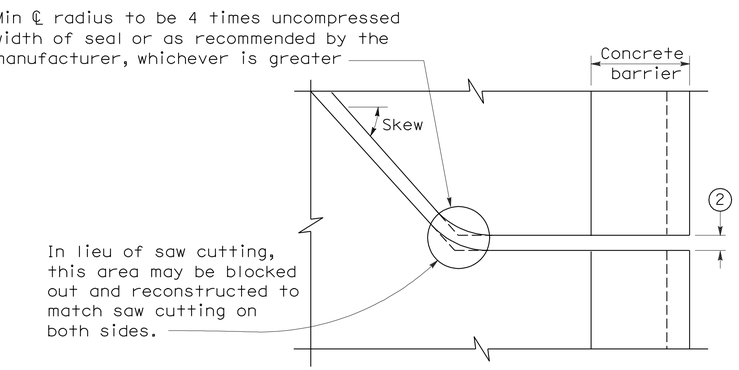

PLAN OF JOINT (SKEW > 20°)

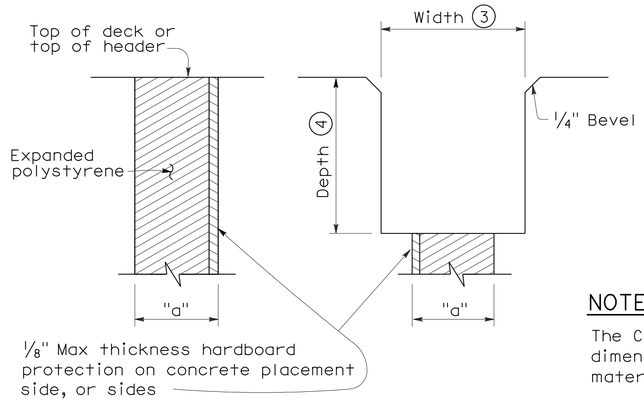

FORMING DETAIL SAWCUT DETAIL

NOTE:

The Contractor shall verify all controlling field dimensions before ordering or fabricatiing any material.

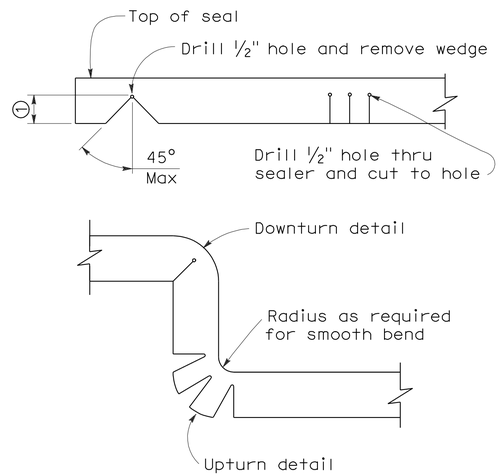

DETAIL A

NOTES:

1. Make smooth cuts from the bottom of seal to 1½" clear of top leaving at least one complete cell between the top of the cut and top of the seal. When necessary cut back of seal to clear conduit and round openings.
2. Opening in barrier to match width of sawn deck joint.
3. Sawcut groove widths shall be as ordered by the Engineer.
4. Depth of sawcut: Type A - Depth to be 2" minimum.
   Type B - Depth to be equal to or greater than the depth of seal measured along the contact surface, when compressed to minimum width position (W_2) plus dimensions shown.
5. MR (movement rating) as shown on other plan sheets.
6. Other depths must be approved by the Engineer.

DIMENSIONS "a" OF JOINT REQUIRED

Movement Rating (MR) 5	Bridge Type	"a" Dimension Deck Concrete Placed		
		Winter	Fall-Spring	Summer
2"	All except CIP/PS	1½"	1¼"	¾"
	CIP/PS	1¼"	1"	½"
1½"	All except CIP/PS	1¼"	1"	½"
	CIP/PS	1"	¾"	½"
1"	All except CIP/PS	1"	¾"	½"
	CIP/PS	¾"	½"	½"
½"	All except CIP/PS	¾"	¾"	½"
	CIP/PS	½"	½"	½"

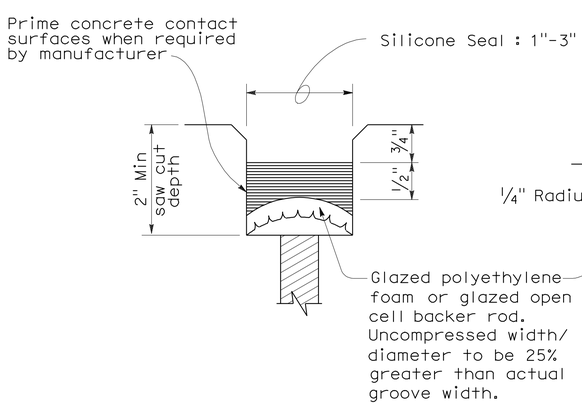

TYPE A SEAL

Movement rating : Silicone = 1" Max

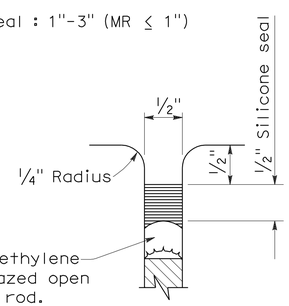

TYPE AL SEAL

Longitudinal joints only

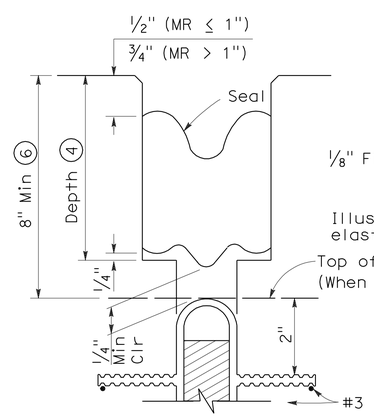

TYPE B JOINT SEAL
IN MINIMUM WIDTH POSITION (W_2)

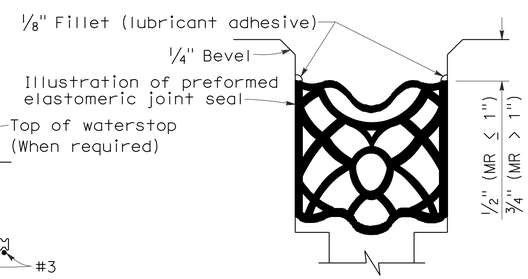

TYPE B SEAL

Movement Rating ≤ 2"

STATE OF CALIFORNIA
DEPARTMENT OF TRANSPORTATION

JOINT SEALS (MAXIMUM MOVEMENT RATING = 2")

NO SCALE

RSP B6-21 DATED OCTOBER 5, 2007 SUPERSEDES STANDARD PLAN B6-21 DATED MAY 1, 2006 - PAGE 258 OF THE STANDARD PLANS BOOK DATED MAY 2006.

REVISED STANDARD PLAN RSP B6-21

2006 REVISED STANDARD PLAN RSP B6-21

5-8-07

DIST	COUNTY	ROUTE	POST MILES TOTAL PROJECT	SHEET NO.	TOTAL SHEETS
12	Ora	57	20.1/21.8	42	48

REGISTERED ELECTRICAL ENGINEER

October 5, 2007
PLANS APPROVAL DATE

REGISTERED PROFESSIONAL ENGINEER
Jeffery G. McRae
No. E14512
Exp. 6-30-08
ELECTRICAL
STATE OF CALIFORNIA

The State of California or its officers or agents shall not be responsible for the accuracy or completeness of electronic copies of this plan sheet.

To accompany plans dated 7-6-10

ELECTROLIERS

STANDARD TYPES
15, 15D
15 STRUCTURE
21, 21D STRUCTURE
30
31
32
35
36-20A

High mast light pole

Double Arm lighting standard

Existing electrolier

Electrolier foundation (Future installation)

NOTES:

1. Luminaires shall be 310 W HPS when installed on Type 21, 21D, 30, 31, 32, 35 and 36-20A Standards, unless otherwise specified. Luminaires shall be 200 W HPS when installed on other type standards or poles, unless otherwise specified.
2. Luminaires shall be the cutoff type, ANSI Type Ⅲ medium cutoff lighting distribution, unless otherwise specified.
3. Variations noted adjacent to symbol on project plans.

Electrolier (see project notes or project plans)

Luminaire on wood pole

STANDARD NOTES:

- AB — Abandon. If applied to conduit, remove conductors.
- BC — Install pull box in existing conduit run.
- BP — Pedestrian barricade, type as indicated on plan.
- CB — Install conduit into existing pull box.
- CC — Connect new and existing conduit. Remove existing conductors and install conductors as indicated.
- CF — Conduit to remain for future use. Remove conductors. Install pull wire or rope.
- DH — Detector handhole.
- FA — Foundation to be abandoned.
- IS — Install sign on signal mast arm.
- NS — No slip base on standard.
- PEC — Photoelectric control.
- PEU — Photoelectric unit.
- RC — Equipment or material to be removed and become the property of the Contractor.
- RE — Remove electrolier, fuses and ballast. Tape ends of conductors.
- RL — Relocate equipment.
- RR — Remove and reuse equipment.
- RS — Remove and salvage equipment.
- SC — Splice new to existing conductors.
- SD — Service disconnect.
- SF — Standard to remain for future use. Remove luminaire, pole conductors, fuses and ballast.
- TSP — Telephone service point.

ABBREVIATIONS AND EQUIPMENT DESIGNATIONS

PROPOSED	EXISTING	
BBS	bbs	Battery backup system
BC	bc	Bolt circle
C	C	Conduit
CCTV	cctv	Closed circuit television
CKT	ckt	Circuit
CMS	cms	Changeable message sign
DLC	dlc	Loop detector lead-in cable
EMS	ems	Extinguishable message sign
EVC	evc	Emergency vehicle cable
EVD	evd	Emergency vehicle detector
FB	fb	Flashing beacon
FBCA	fbca	Flashing beacon control assembly
FBS	fbs	Flashing beacon with slip base
FO	fo	Fiber optic
G	G	Ground (Equipment Grounding Conductor)
GFCI	GFCI	Ground fault circuit interrupt
HAR	har	Highway advisory radio
HEX	hex	Hexagonal
HPS	hps	High pressure sodium
IISNS	iisns	Internally illuminated street name sign
ISL	isl	Induction sign lighting
LED	led	Light emitting diode
LMA	lma	Luminaire mast arm
LPS	lps	Low pressure sodium
LTG	ltg	Lighting
LUM	lum	Luminaire
MAT	mat	Mast arm mounting vehicle signal faces, top attachment
MAS	mas	Mast arm mounting vehicle signal faces, side attachment
MAS-4A	mas-4A	Mast arm mounting vehicle signal faces, side attachment - 4 signal section
MAS-4B	mas-4B	
MAS-4C	mas-4C	
MAS-5A	mas-5A	Mast arm mounting vehicle signal faces, side attachment - 5 signal section
MAS-5B	mas-5B	
MC	mc	Mercury contactor
M/M	m/m	Multiple to multiple transformer
MT	mt	Conduit with pull wire or rope only
MTG	mtg	Mounting
	mv	Mercury vapor lighting fixture
N	N	Neutral (Grounded Conductor)
NC	NC	Normally closed
NO	NO	Normally open
PB	pb	Pull box
PEC	pec	Photoelectric control (Type Ⅰ, Ⅱ, Ⅲ, Ⅳ or Ⅴ as shown)
PED	ped	Pedestrian
PEU	peu	Photoelectric unit
PPB	ppb	Pedestrian push button
RL		Relocated equipment
RM	rm	Ramp metering
SB	sb	Slip base
SIC	sic	Signal interconnect cable
SIG	sig	Signal
SMA	sma	Signal mast arm
SNS	sns	Street name sign
SP	sp	Service point
TDC	tdc	Telephone demarcation cabinet
TMS	tms	Traffic monitoring station
TOS	tos	Traffic Operations System
VEH	veh	Vehicle
XFMR	xfmr	Transformer
COMM	comm	Communication
RWIS	rwis	Roadway weather information system

SOFFIT AND WALL MOUNTED LUMINAIRES

Pendant, 70 W HPS unless otherwise specified.

Flush, 70 W HPS unless otherwise specified.

Wall surface, 70 W HPS unless otherwise specified.

Existing soffit or wall luminaire to remain unmodified.

Existing soffit or wall luminaire to be modified as specified.

NOTE:

Arrow indicates "street side" of luminaire.

STATE OF CALIFORNIA
DEPARTMENT OF TRANSPORTATION

ELECTRICAL SYSTEMS (SYMBOLS AND ABBREVIATIONS)

NO SCALE

RSP ES-1A DATED OCTOBER 5, 2007 SUPERSEDES STANDARD PLAN ES-1A
DATED MAY 1, 2006 - PAGE 400 OF THE STANDARD PLANS BOOK DATED MAY 2006.

REVISED STANDARD PLAN RSP ES-1A

2006 REVISED STANDARD PLAN RSP ES-1A

DIST	COUNTY	ROUTE	POST MILES TOTAL PROJECT	SHEET NO.	TOTAL SHEETS
12	Ora	57	20.1/21.8	43	48

REGISTERED ELECTRICAL ENGINEER

October 5, 2007
PLANS APPROVAL DATE

REGISTERED PROFESSIONAL ENGINEER Jeffery G. McRae No. E14512 Exp. 6-30-08 ELECTRICAL STATE OF CALIFORNIA

The State of California or its officers or agents shall not be responsible for the accuracy or completeness of electronic copies of this plan sheet.

To accompany plans dated 7-6-10

CONDUIT

PROPOSED	EXISTING	
		Lighting Conduit, unless otherwise indicated or noted
		Traffic signal conduit
C	c	Communication conduit
T	t	Telephone conduit
F	f	Fire alarm conduit
FO	fo	Fiber optic conduit
		Conduit termination (RSP ES-9A C)
R	r	Conduit riser in/on structure or service pole

SERVICE EQUIPMENT

PROPOSED	EXISTING	
OH	oh	Overhead lines
U	U	Wood pole "U" indicates utility owned
		Pole guy with anchor
		Utility transformer - ground mounted
III		Service equipment enclosure type
		Service equipment enclosure door indicates front of enclosure
T	t	Telephone demarcation cabinet

POLE-MOUNTED SERVICE DESIGNATION

Type of installation

TYPE H SERVICE - 28'-10" ← Pole height above grade

ILLUMINATED OVERHEAD SIGN

PROPOSED	EXISTING	
		Overhead sign - Single post
		Overhead sign - Two post
		Overhead sign - Mounted on structure
		Overhead sign with electrolier

SIGNAL EQUIPMENT

PROPOSED	EXISTING	
		Pedestrian signal face
		Pedestrian push button post
		Pedestrian barricade
		Vehicle signal face (with backplate, 3-Section: red, yellow and green)
		Vehicle signal face with angle visors
PV	PV	Modifications of basic symbols: "L" indicates all non-arrow sections louvered "LG" indicates louvered green section only "PV" indicates 12" programmed visibility sections "8" indicates all 8" sections (only when specified)
		Type 15TS and Vehicle signal face
		Vehicle signal face with red, yellow and green left arrow sections
		Vehicle signal face with red and yellow sections and up green arrow
		Vehicle signal face (5 Section) with red, yellow and green sections and yellow and green right arrows
		Type 1 Standard and attached vehicle signal faces
		Standard with signal mast arm only and attached vehicle signal faces and internally illuminated street name sign
		Type 33 Standard, Left-turn vehicle signal face and sign
		Standard with luminaire and signal mast arms and attached vehicle signal faces
		Cantilever flashing beacon Type 9 Frame, with a sign unless otherwise specified or indicated
		Type 15-FBS Standard with two vehicle signal face sections with lens, backplate and visor with a sign
R	Y	Flashing beacon. One vehicle signal face section with lens, backplate and visor. "R" indicates red indication, "Y" indicates yellow indication
		Controller assembly. Door indicates front of cabinet

SIGNAL EQUIPMENT Cont

PROPOSED	EXISTING	
		Guard post
		Type 1 Standard with "Meter On" sign
		Emergency Vehicle detector

NOTES:

1. All signal sections shall be 12" unless shown otherwise.
2. Signal heads shall be provided with backplates unless shown otherwise.
3. Signal indication shall be LED.

STATE OF CALIFORNIA
DEPARTMENT OF TRANSPORTATION

ELECTRICAL SYSTEMS (SYMBOLS AND ABBREVIATIONS)

NO SCALE

RSP ES-1B DATED OCTOBER 5, 2007 SUPERCEDES STANDARD PLAN ES-1B DATED MAY 1, 2006 - PAGE 401 OF THE STANDARD PLANS BOOK DATED MAY 2006.

REVISED STANDARD PLAN RSP ES-1B

2006 REVISED STANDARD PLAN RSP ES-1B

DIST	COUNTY	ROUTE	POST MILES TOTAL PROJECT	SHEET NO.	TOTAL SHEETS
12	Ora	57	20.1/21.8	44	48

REGISTERED ELECTRICAL ENGINEER

October 5, 2007
PLANS APPROVAL DATE

REGISTERED PROFESSIONAL ENGINEER
Jeffery G. McRae
No. E14512
Exp. 6-30-08
ELECTRICAL
STATE OF CALIFORNIA

The State of California or its officers or agents shall not be responsible for the accuracy or completeness of electronic copies of this plan sheet.

To accompany plans dated 7-6-10

EQUIPMENT IDENTIFICATION

ILLUMINATED SIGN IDENTIFICATION NUMBER:

Sign No. 12345 — Sign number - Place on post or structure

10 ISL SCI 1.0

- 1.0 — Transformer rating (kVA)
- SCI — Lighting control type
- ISL — Number and type of fixtures

Do NOT place on standard or structure

ELECTROLIER OR EQUIPMENT IDENTIFICATION NUMBER:

12345 - 15'-0"

- 15'-0" — Mast arm length, if shown. Do not place on standard or structure.
- 12345 — Equipment number - Place on standard or structure. Existing equipment numbers are shown in parenthesis

CONDUIT AND CONDUCTOR IDENTIFICATION:

1½"C, 2#10, 15#14, 2 DLC

- 2#10, 15#14, 2 DLC — Number and size of conductors and cables
- 1½"C — Size of conduit in inches

Ø1, Ø2, Ø2P, etc.	Traffic phase identification for signal faces, detectors and phase diagrams
1 2 3	Project note numbers
A B C	Equipment description, installation or item numbers
1 2 3	Conduit run numbers

SIGNAL AND LIGHTING STANDARD (TYPICAL DESIGNATION):

19A - 3 - 100

- 100 — Wind velocity = 100 mph
- 3 — Case 3 arm loading
- 19A — Standard type
- Standard Plan sheet number
- Detail number or letter

MISCELLANEOUS EQUIPMENT

PROPOSED	EXISTING	
CMS	cms	Changeable message sign
		Closed circuit television camera
		Highway advisory radio pole and antenna
EMS	ems	Extinguishable message sign
M V	m v	Detection device M = Microwave sensor V = Video image sensor

WIRING DIAGRAM LEGEND

P	Pole
CB	Circuit breaker
A	Ampere
V	Volt
M	Metered
UM	Unmetered
NB	Neutral bus
GB	Ground bus
G	Equipment grounding conductor
N	Grounded conductor (Neutral)

- External conductor
- Conductor or bus
- Tie point
- Contactor coil
- Contactor, Contact NO
- Terminal blocks
- Contactor, Contact NC
- Enclosure bond
- Grounding electrode
- Circuit breaker
- Receptacle

PULL BOXES

PROPOSED	EXISTING	
		Pull box-No. 5 unless otherwise indicated or noted.
3	9A(21)	Pull box-Additional designations or descriptions

3 = No. 3½ pull box
5 = No. 5 pull box
6 = No. 6 pull box
7 = No. 7 (Ceiling pull box)
8 = No. 8 (Pendant soffit pull box)
9 = No. 9 pull box
9A = No. 9A pull box

(C) = Communications pull box
(E) = Pull box with extension
(S) = Sprinkler control pull box
(21) = Anchor bolts and conduit for future installation of Type 21 Standard
(T) = Traffic pull box

VEHICLE DETECTORS

5 J 9 U

- U = Upper
- L = Lower
- Slot number in input file
- Input file (I or J)
- Phase — Vehicle detector designation

PROPOSED	EXISTING	
		Type A detector loop. Outline of sawcut shown.
		Type B detector loop. Outline of sawcut shown.
		Type C detector loop. Outline of sawcut shown.
		Type D detector loop. Outline of sawcut shown.
		Type E detector loop. Outline of sawcut shown.
		Type Q detector loop. Outline of sawcut shown.
		Magnetic detector
DH	dh	Detector handhole
		Microwave or video detection zone

STATE OF CALIFORNIA
DEPARTMENT OF TRANSPORTATION

ELECTRICAL SYSTEMS (SYMBOLS AND ABBREVIATIONS)

NO SCALE

RSP ES-1C DATED OCTOBER 5, 2007 SUPERCEDES STANDARD PLAN ES-1C DATED MAY 1, 2006 - PAGE 402 OF THE STANDARD PLANS BOOK DATED MAY 2006.

REVISED STANDARD PLAN RSP ES-1C

2006 REVISED STANDARD PLAN RSP ES-1C

DIST	COUNTY	ROUTE	POST MILES TOTAL PROJECT	SHEET NO.	TOTAL SHEETS
12	Ora	57	20.1/21.8	45	48

Jeffery G. McRae
REGISTERED ELECTRICAL ENGINEER

October 5, 2007
PLANS APPROVAL DATE

REGISTERED PROFESSIONAL ENGINEER
Jeffery G. McRae
No. E14512
Exp. 6-30-08
ELECTRICAL
STATE OF CALIFORNIA

The State of California or its officers or agents shall not be responsible for the accuracy or completeness of electronic copies of this plan sheet.

To accompany plans dated 7-6-10

LOOP INSTALLATION PROCEDURE

1. Loops shall be centered in lanes.
2. Saw slots in pavement for loop conductors as shown in details.
3. Distance between side of loop and a lead-in saw cut from adjacent detectors shall be 2'-0" minimum. Distance between lead-in saw cuts shall be 6" minimum.
4. Bottom of saw slot shall be smooth with no sharp edges.
5. Slots shall be washed until clean, blown out and thoroughly dried before installing loop conductors.
6. Adjacent loops on the same sensor unit channel shall be wound in opposite directions.
7. Identify and tag loop circuit pairs in the pull box with loop number, start (S) and finish (F) of conductor. Identify and tag lead-in-cable with sensor number and phase.
8. Install loop conductor in slot using a 3/16" to 1/4" thick wood paddle. Hold loop conductors with wood paddles (at the bottom of the sawed slot) during sealant placement.
9. No more than 2 twisted pairs shall be installed in one sawed slot.
10. Allow additional 5'-0" of slack length of conductor for the lead-in run to pull box.
11. The additional length of each conductor for each loop shall be twisted together into a pair (6 turns per 3'-4" minimum) before being placed in the slot and conduit leading to pull box.
12. Test each loop circuit for continuity, circuit resistance and insulation resistance at the pull box before filling slots.
13. Fill slots as shown in details.
14. Splice loop conductors to lead-in-cable. Splices shall be soldered.
15. End of lead-in-cable and Type 2 loop conductor shall be waterproofed prior to installing in conduit to prevent moisture from entering the cable.
16. Lead-in-cable shall not be spliced between the pull box and the controller cabinet terminals.
17. Test each loop circuit for continuity, circuit resistance and insulation resistance at the controller cabinet location.
18. Where loop conductors are not to be spliced to a lead-in-cable, the ends of the conductors shall be taped and waterproofed with electrical insulating coating.

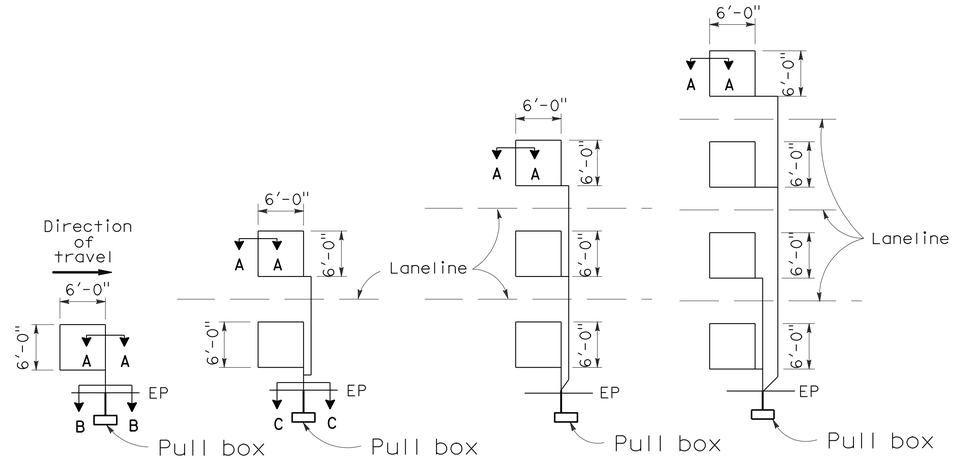

TYPE 1A INSTALLATION | TYPE 2A INSTALLATION | TYPE 3A INSTALLATION | TYPE 4A INSTALLATION

SAWCUT DETAILS

(Type A loop detector configurations illustrated)

1. 1A thru 4A = 1 Type A loop configuration in each lane.
2. 1B thru 4B = 1 Type B loop configuration in each lane.
3. 1C = 1 Type C loop configuration entering lanes as required.
4. 1D thru 4D = 1 Type D loop configuration in each lane.
5. 1E thru 4E = 1 Type E loop configuration in each lane.
6. 1Q thru 4Q = 1 Type Q loop configuration in each lane. (Use Type A, B, C, D, E or Q loop detector configurations only when specified or shown on plans)

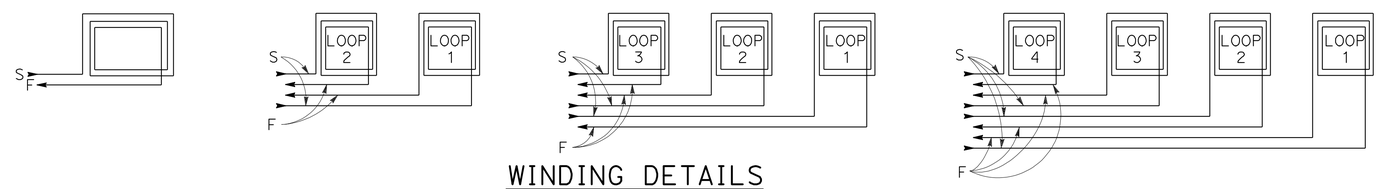

WINDING DETAILS

See Notes 6 and 7

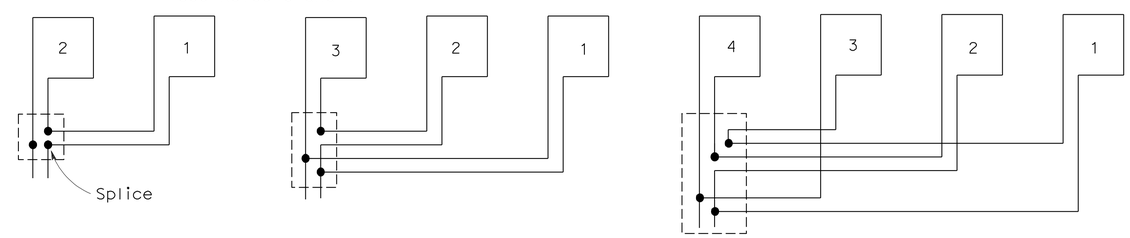

TYPICAL LOOP CONNECTIONS

(Dashed lines represent the pull box)

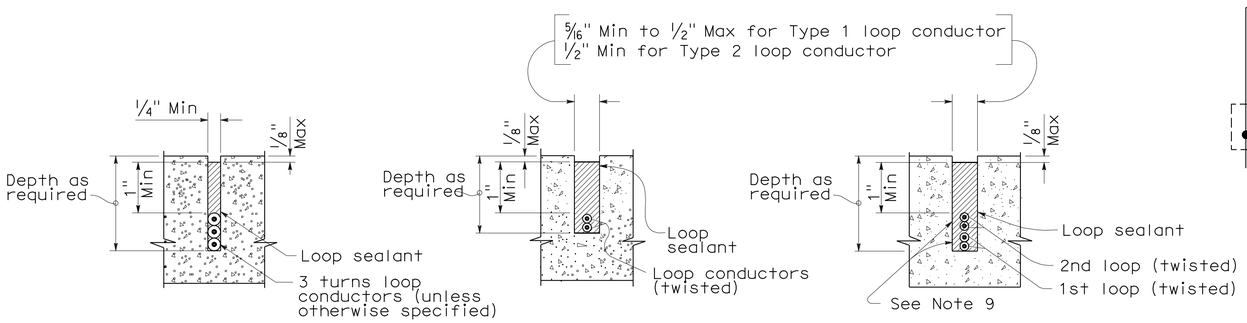

SECTION A-A | SECTION B-B | SECTION C-C

SLOT DETAILS - TYPE 1 AND TYPE 2 LOOP CONDUCTOR

STATE OF CALIFORNIA
DEPARTMENT OF TRANSPORTATION

ELECTRICAL SYSTEMS (DETECTORS)

NO SCALE

RSP ES-5A DATED OCTOBER 5, 2007 SUPERCEDES STANDARD PLAN ES-5A DATED MAY 1, 2006 - PAGE 423 OF THE STANDARD PLANS BOOK DATED MAY 2006.

REVISED STANDARD PLAN RSP ES-5A

2006 REVISED STANDARD PLAN RSP ES-5A

DIST	COUNTY	ROUTE	POST MILES TOTAL PROJECT	SHEET No	TOTAL SHEETS
12	Ora	57	20.1/21.8	46	48

REGISTERED CIVIL ENGINEER 04/14/10 DATE

7-6-10
PLANS APPROVAL DATE

REGISTERED PROFESSIONAL ENGINEER KUMAR K. GHOSH No. C 72555 Exp. 6/30/10 CIVIL STATE OF CALIFORNIA

The State of California or its officers or agents shall not be responsible for the accuracy or completeness of electronic copies of this plan sheet.

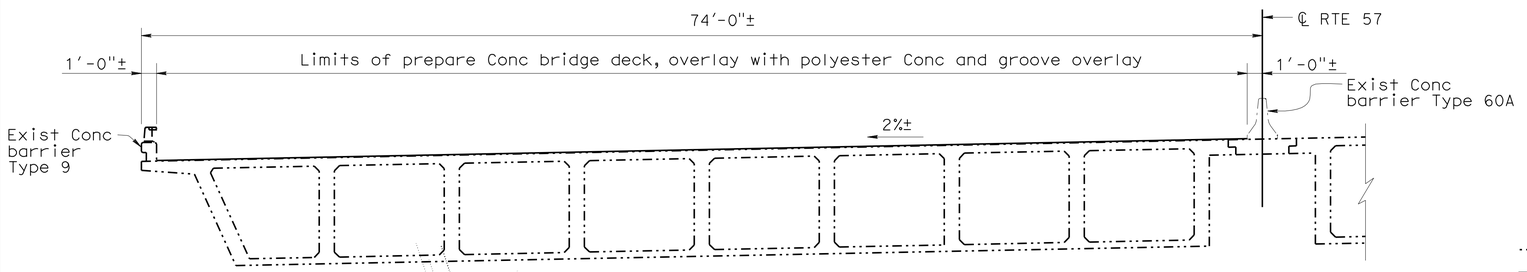

TYPICAL SECTION - BIRCH ST UC

1" = 5'
(Bridge No. 55-0485, PM 20.4)

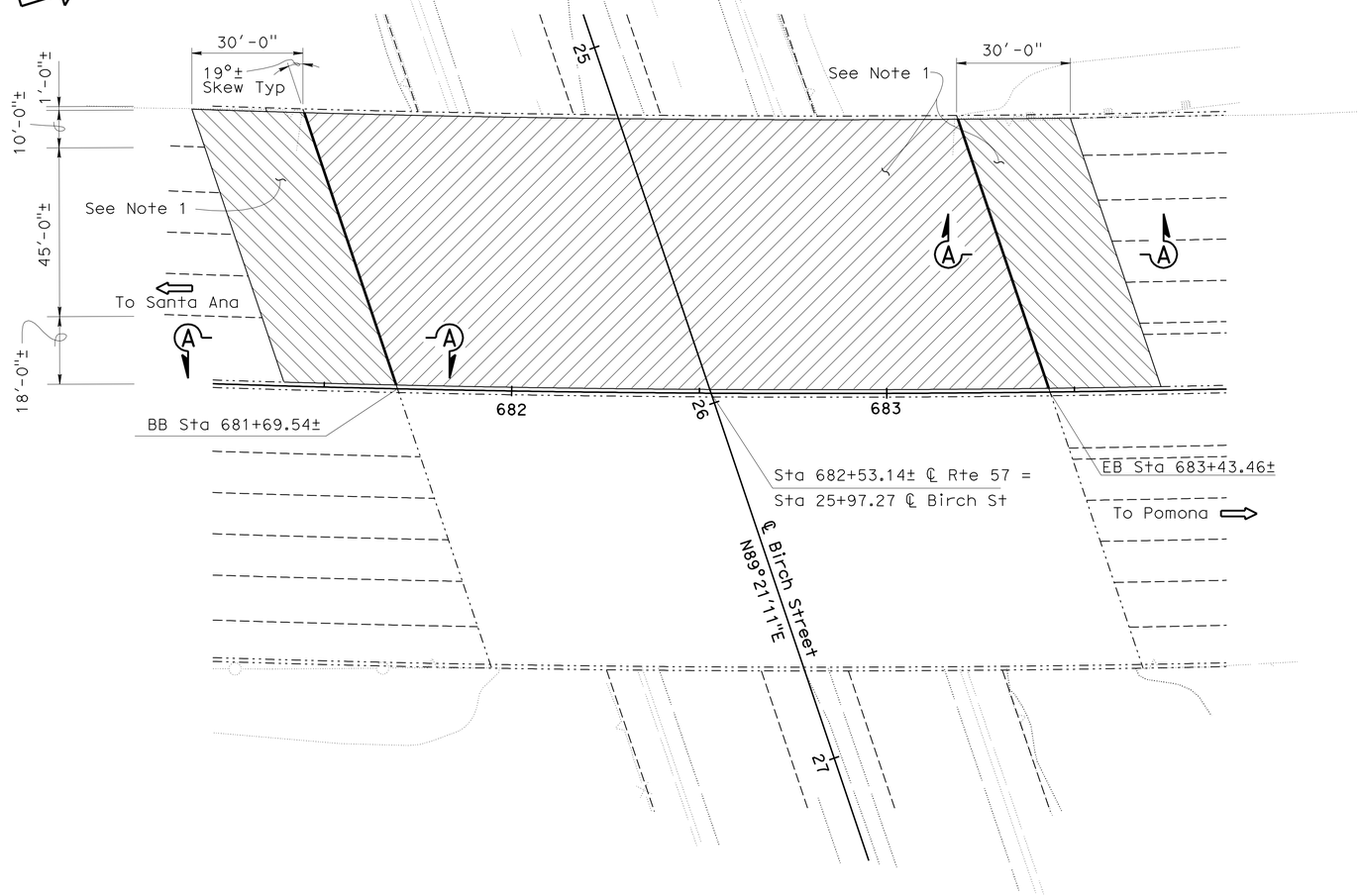

PLAN - BIRCH ST UC

1" = 20'
(Bridge No. 55-0485, PM 20.4)

NOTE:
THE CONTRACTOR SHALL VERIFY ALL CONTROLLING FIELD DIMENSIONS BEFORE ORDERING OR FABRICATING ANY MATERIAL.

LEGEND:

- Indicates existing
- Indicates limits of removal of unsound concrete and patch with rapid setting concrete patches, prepare concrete bridge deck and place new ¾" minimum depth polyester concrete overlay. See "MISCELLANEOUS DETAILS" sheet for "DECK REPAIR DETAIL"
- Indicates limits of removal of existing approach slab surface, prepare approach slab surface, and place polyester concrete overlay to conform to existing roadway and bridge deck polyester concrete overlay. See"MISCELLANEOUS DETAILS" sheet for "SECTION A-A"
- Indicates location of remove and place new joint seal

NOTE:

1. Overlay to be grooved after cure, see "Road Plans."

STANDARD PLANS DATED MAY 2006

	SHEET NO.	TITLE
	A10A	ABBREVIATIONS
	A10B	ABBREVIATIONS
RSP	B6-21	JOINT SEALS (MAXIMUM MOVEMENT RATING = 2")

INDEX TO PLANS

SHEET NO.	TITLE
1	GENERAL PLAN NO. 1
2	GENERAL PLAN NO. 2
3	MISCELLANEOUS DETAILS

QUANTITIES - BIRCH ST UC

REMOVE CONCRETE APPROACH SLAB SURFACE	4,320	SQFT
REMOVE UNSOUND CONCRETE	31	CF
PREPARE CONCRETE BRIDGE DECK SURFACE	16,842	SQFT
CLEAN EXPANSION JOINT	154	LF
RAPID SETTING CONCRETE (PATCH)	31	CF
FURNISH POLYESTER CONCRETE OVERLAY	1,053	CF
PLACE POLYESTER CONCRETE OVERLAY	16,842	SQFT
JOINT SEAL (MR 1")	77	LF
JOINT SEAL (MR 1½")	77	LF
PUBLIC SAFETY PLAN	LUMP	SUM

ALL DIMENSIONS ARE IN FT UNLESS OTHERWISE NOTED

CHUNG-YUAN WEN
DESIGN ENGINEER

	BY	CHECKED
DESIGN	K. Ghosh	K. Kim
DETAILS	M. Kingra	K. Ghosh
QUANTITIES	K. Kim	S. Yeh
LAYOUT	M. Singh	K. Ghosh
SPECIFICATIONS	D. Klein	PLANS AND SPECS COMPARED

STATE OF CALIFORNIA
DEPARTMENT OF TRANSPORTATION

DIVISION OF ENGINEERING SERVICES
STRUCTURE DESIGN
DESIGN BRANCH 21

CU 12
EA 0K5401

BRIDGE NO. VARIOUS
POST MILE VARIES

Rte 57 PAVEMENT OVERLAY AND GROOVING
GENERAL PLAN NO. 1

DISREGARD PRINTS BEARING EARLIER REVISION DATES
REVISION DATES 01/22/10 02/17/10 03/09/10 04/12/10
SHEET 1 OF 3

STRUCTURES DESIGN GENERAL PLAN SHEET (ENGLISH) (REV. 10/25/05)
ORIGINAL SCALE IN INCHES FOR REDUCED PLANS 0 1 2 3
FILE => 56-0587-a-gp01.dgn
STRUCTURES DESIGN GENERAL PLAN SHEET (ENGLISH) (REV.07-24-06)
USERNAME => trcgro1 DATE PLOTTED => 08-JUL-2010 TIME PLOTTED => 13:42

DIST	COUNTY	ROUTE	POST MILES TOTAL PROJECT	SHEET No	TOTAL SHEETS
12	Ora	57	20.1/21.8	47	48

REGISTERED CIVIL ENGINEER 04/14/10 DATE

7-6-10
PLANS APPROVAL DATE

REGISTERED PROFESSIONAL ENGINEER KUMAR K. GHOSH No. C 72555 Exp. 6/30/10 CIVIL STATE OF CALIFORNIA

The State of California or its officers or agents shall not be responsible for the accuracy or completeness of electronic copies of this plan sheet.

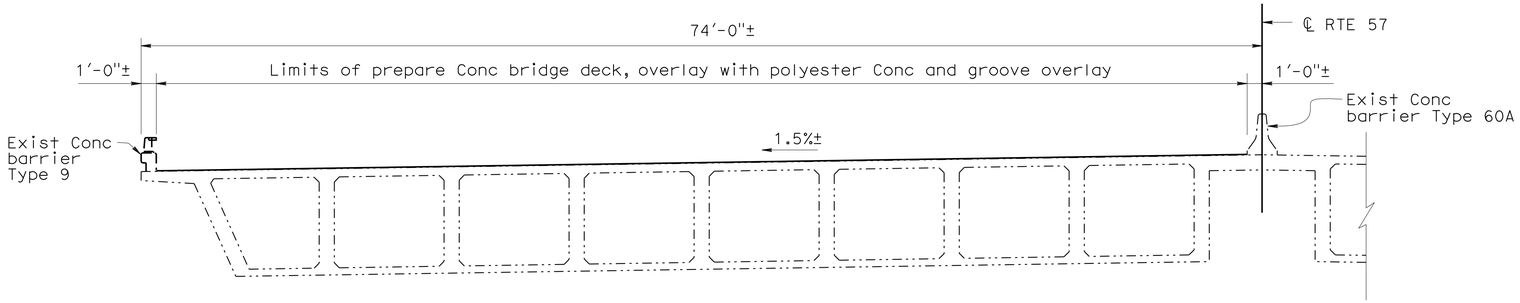

TYPICAL SECTION - LAMBERT ROAD UC

1" = 5'
(BRIDGE NO. 55-0492, PM 20.9)

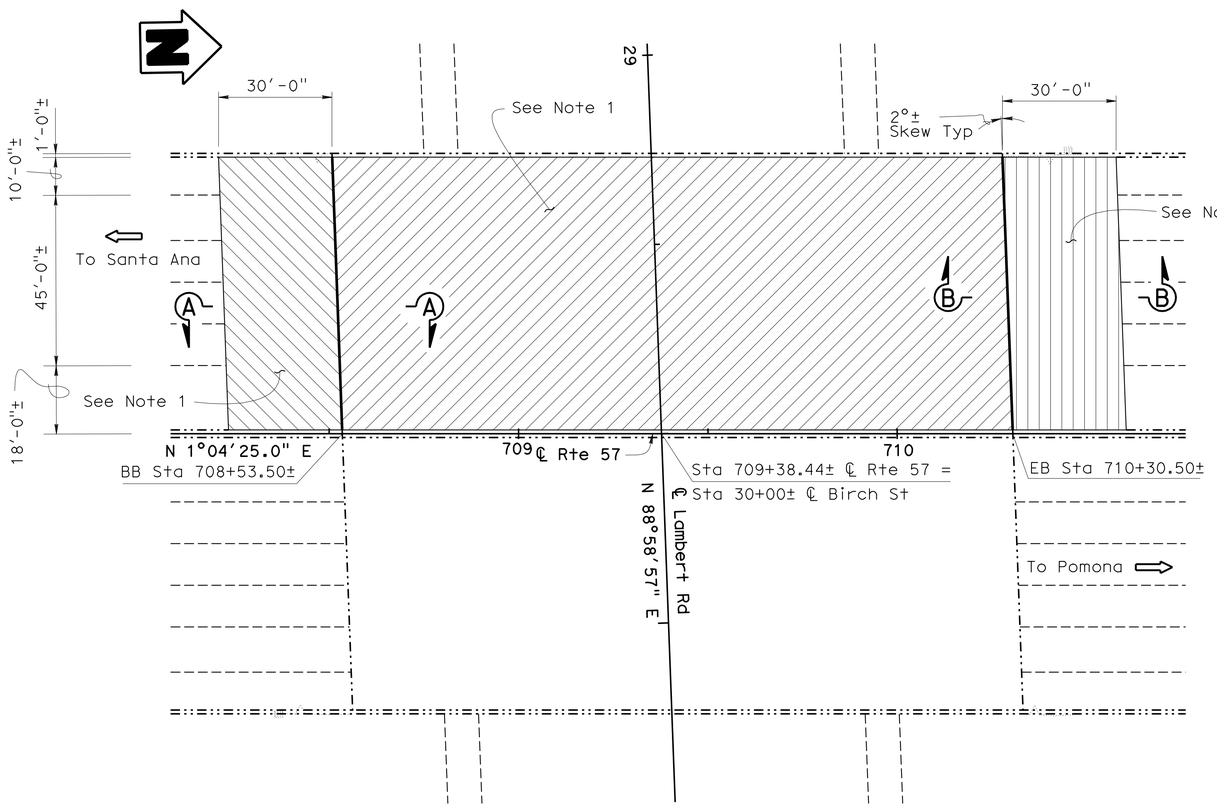

PLAN - LAMBERT ROAD UC

1" = 20'
(BRIDGE NO. 55-0492, PM 20.9)

NOTE:
THE CONTRACTOR SHALL VERIFY ALL CONTROLLING FIELD DIMENSIONS BEFORE ORDERING OR FABRICATING ANY MATERIAL.

LEGEND:

- Indicates existing
- Indicates limits of removal of unsound concrete and patch with rapid setting concrete patches, prepare concrete bridge deck and place new ¾" minimum depth polyester concrete overlay. See "MISCELLANEOUS DETAILS" sheet for "DECK REPAIR DETAIL"
- Indicates limits of removal of existing approach slab surface, prepare approach slab surface, and place polyester concrete overlay to conform to existing roadway and bridge deck polyester concrete overlay. See"MISCELLANEOUS DETAILS" sheet for "SECTION A-A"
- Indicates limits to prepare existing concrete approach slab surface and place polyester concrete overlay to conform to roadway OGAC overlay and bridge deck polyester concrete overlay.See"MISCELLANEOUS DETAILS" sheet for"SECTION B-B"
- Indicates location of remove and place new joint seal

NOTE:

1. Overylay to be grooved after cure, see "Road Plans."

QUANTITIES - LAMBERT RD UC

REMOVE CONCRETE APPROACH SLAB SURFACE	4,320	SQFT
REMOVE UNSOUND CONCRETE	32	CF
PREPARE CONCRETE BRIDGE DECK SURFACE	17,064	SQFT
CLEAN EXPANSION JOINT	146	LF
RAPID SETTING CONCRETE (PATCH)	32	CF
FURNISH POLYESTER CONCRETE OVERLAY	1,067	CF
PLACE POLYESTER CONCRETE OVERLAY	17,064	SQFT
JOINT SEAL (MR 1")	73	LF
JOINT SEAL (MR 1½")	73	LF

ALL DIMENSIONS ARE IN FT UNLESS OTHERWISE NOTED

CHUNG-YUAN WEN
DESIGN ENGINEER

	BY	CHECKED		BY	CHECKED
DESIGN	K. Ghosh	K. Kim			
DETAILS	M. Kingra	K. Ghosh	LAYOUT	M. Kingra	K. Ghosh
QUANTITIES	K. Kim	S. Yeh	SPECIFICATIONS	D. Klein	PLANS AND SPECS COMPARED

STATE OF CALIFORNIA
DEPARTMENT OF TRANSPORTATION

DIVISION OF ENGINEERING SERVICES
STRUCTURE DESIGN
DESIGN BRANCH 21

BRIDGE NO. VARIOUS
POST MILE VARIES

Rte 57 PAVEMENT OVERLAY AND GROOVING
GENERAL PLAN NO. 2

STRUCTURES DESIGN GENERAL PLAN SHEET (ENGLISH) (REV. 10/25/05)

ORIGINAL SCALE IN INCHES FOR REDUCED PLANS 0 1 2 3

CU 12
EA 0K5401

DISREGARD PRINTS BEARING EARLIER REVISION DATES

REVISION DATES: 01/07/09 01/26/10 02/17/10 04/12/10

SHEET 2 OF 3

FILE => 56-0587-a-gp02.dgn

STRUCTURES DESIGN GENERAL PLAN SHEET (ENGLISH) (REV.07-24-06)

USERNAME => frcarto1 DATE PLOTTED => 08-JUL-2010 TIME PLOTTED => 13:43

DIST	COUNTY	ROUTE	POST MILES TOTAL PROJECT	SHEET No	TOTAL SHEETS
12	Ora	57	20.1/21.8	48	48

REGISTERED CIVIL ENGINEER 04/14/10 DATE

7-6-10
PLANS APPROVAL DATE

REGISTERED PROFESSIONAL ENGINEER KUMAR K. GHOSH No. C 72555 Exp. 6/30/10 CIVIL STATE OF CALIFORNIA

The State of California or its officers or agents shall not be responsible for the accuracy or completeness of electronic copies of this plan sheet.

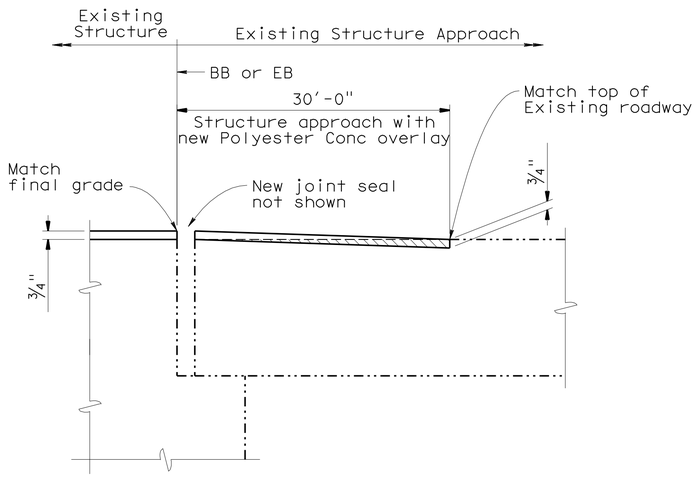

SECTION A-A

NO SCALE

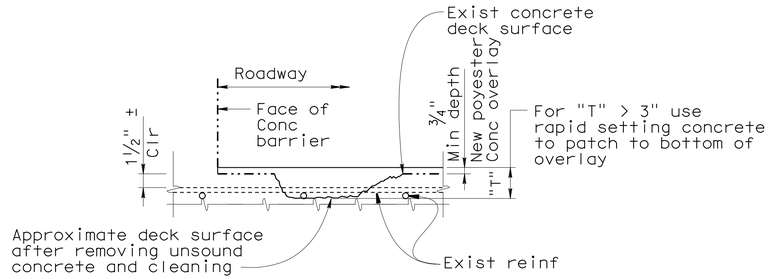

DECK REPAIR DETAIL

Reinforcement will be encountered during deck concrete removal.
NO SCALE

DECK REPAIR TABLE

BRIDGE NAME	BRIDGE NUMBER	APPROX AREA DAMAGED (PERCENT)	APPROX DEPTH (IN)
BIRCH ST. UC	55-0485	1	3
LAMBERT RD. UC	55-0492	1	3

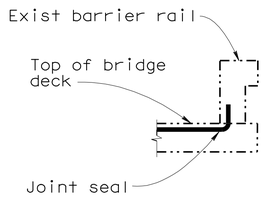

JOINT SEAL AT LOW SIDE OF DECK

Details shown for illustration purposes only.
For use only where deck joint matches the sidewalk, curb or barrier rail joint.
NO SCALE

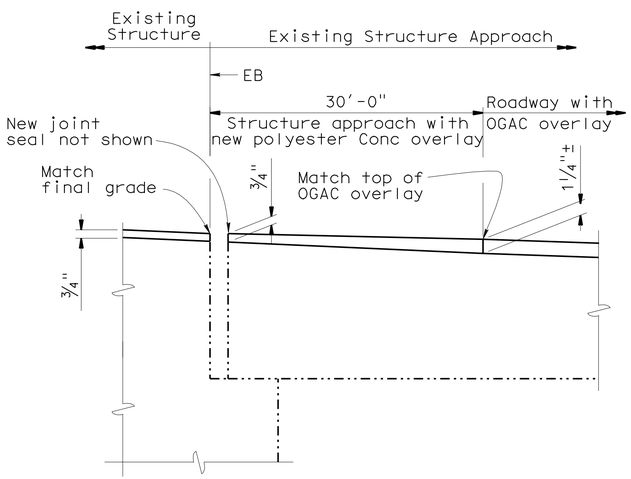

SECTION B-B

NO SCALE

JOINT SEAL TABLE

BRIDGE NUMBER	JOINT SEAL LOCATION	MINIMUM "MR" (inches)	APPROXIMATE LENGTH (ft)	EXISTING WATERSTOP	APPROX DEPTH TO CLEAN EXP JOINT (inches)
55-0485	Abutment 1	1	77±	No	12
	Abutment 2	1½	77±	No	12
55-0492	Abutment 1	1	73±	No	12
	Abutment 2	1½	73±	No	12

NOTES:

The following notes apply to JOINT SEAL TYPE B:

1) Seal must satisfy both minimum Movement Rating (MR) shown in the "JOINT SEAL TABLE" and minimum W1 requirements.
2) Minimum W1 is the calculated maximum width of the joint based on field measurements. After the joints have been cleaned, minimum W1 is to be recalculated by the Engineer.
3) W1 shall be the smaller of the values determined as follows:
   A) 0.85 times the manufacturer's designed minimum uncompressed width of the seal.
   B) The width of the seal on the third successive test cycle of the pressure deflection test, when compressed to an average pressure of 3 psi.
4) Bend Type B joint seal 6" up into curb or rail on the low side of the deck where deck joint matches curb or rail joint.
5) For details not shown see B6-21

LEGEND:

Indicates limits of removal of existing concrete surface

NOTE:
THE CONTRACTOR SHALL VERIFY ALL CONTROLLING FIELD DIMENSIONS BEFORE ORDERING OR FABRICATING ANY MATERIAL.

	BY	CHECKED
DESIGN	K. Ghosh	K. Kim
DETAILS	M. Kingra	K. Ghosh
QUANTITIES	K. Kim	S. Yeh

STATE OF CALIFORNIA
DEPARTMENT OF TRANSPORTATION

DIVISION OF ENGINEERING SERVICES
STRUCTURE DESIGN
DESIGN BRANCH 21

BRIDGE NO. VARIOUS
POST MILE VARIES

Rte 57 PAVEMENT OVERLAY AND GROOVING
MISCELLANEOUS DETAILS

STRUCTURES DESIGN DETAIL SHEET (ENGLISH) (REV. 10/25/05)

ORIGINAL SCALE IN INCHES FOR REDUCED PLANS 0 1 2 3

CU 12
EA 0K5401

DISREGARD PRINTS BEARING EARLIER REVISION DATES 02/17/10 04/12/10

REVISION DATES

SHEET 3 OF 3

FILE => 56-0587-c-misc_dt.dgn

USERNAME => trcarol DATE PLOTTED => 08-JUL-2010 TIME PLOTTED => 13:43