Dist	COUNTY	ROUTE	POST MILES TOTAL PROJECT	SHEET No.	TOTAL SHEETS
12	Ora	22	R3.6/R12.7	1	61

INDEX OF PLANS

SHEET No.	DESCRIPTION
1	TITLE AND LOCATION MAP
2	TYPICAL CROSS SECTIONS
3-5	TEMPORARY WATER POLLUTION CONTROL PLANS
6-8	UTILITY PLANS
9	CONSTRUCTION AREA SIGNS
10-11	STAGE CONSTRUCTION AND TRAFFIC HANDLING PLAN AND QUANTITIES
12-40	SOUND WALL PLANS, DETAILS, QUANTITIES AND LOG OF TEST BORING SHEET
41	ELECTRICAL PLAN
42-61	REVISED AND NEW STANDARD PLANS

THE STANDARD PLANS LIST APPLICABLE TO THIS CONTRACT IS INCLUDED IN THE NOTICE TO BIDDERS AND SPECIAL PROVISIONS BOOK.

STATE OF CALIFORNIA

DEPARTMENT OF TRANSPORTATION

PROJECT PLANS FOR CONSTRUCTION ON

STATE HIGHWAY

IN ORANGE COUNTY
IN GARDEN GROVE, ORANGE AND SANTA ANA
AT VARIOUS LOCATIONS

TO BE SUPPLEMENTED BY STANDARD PLANS DATED MAY 2006

LOCATION MAP

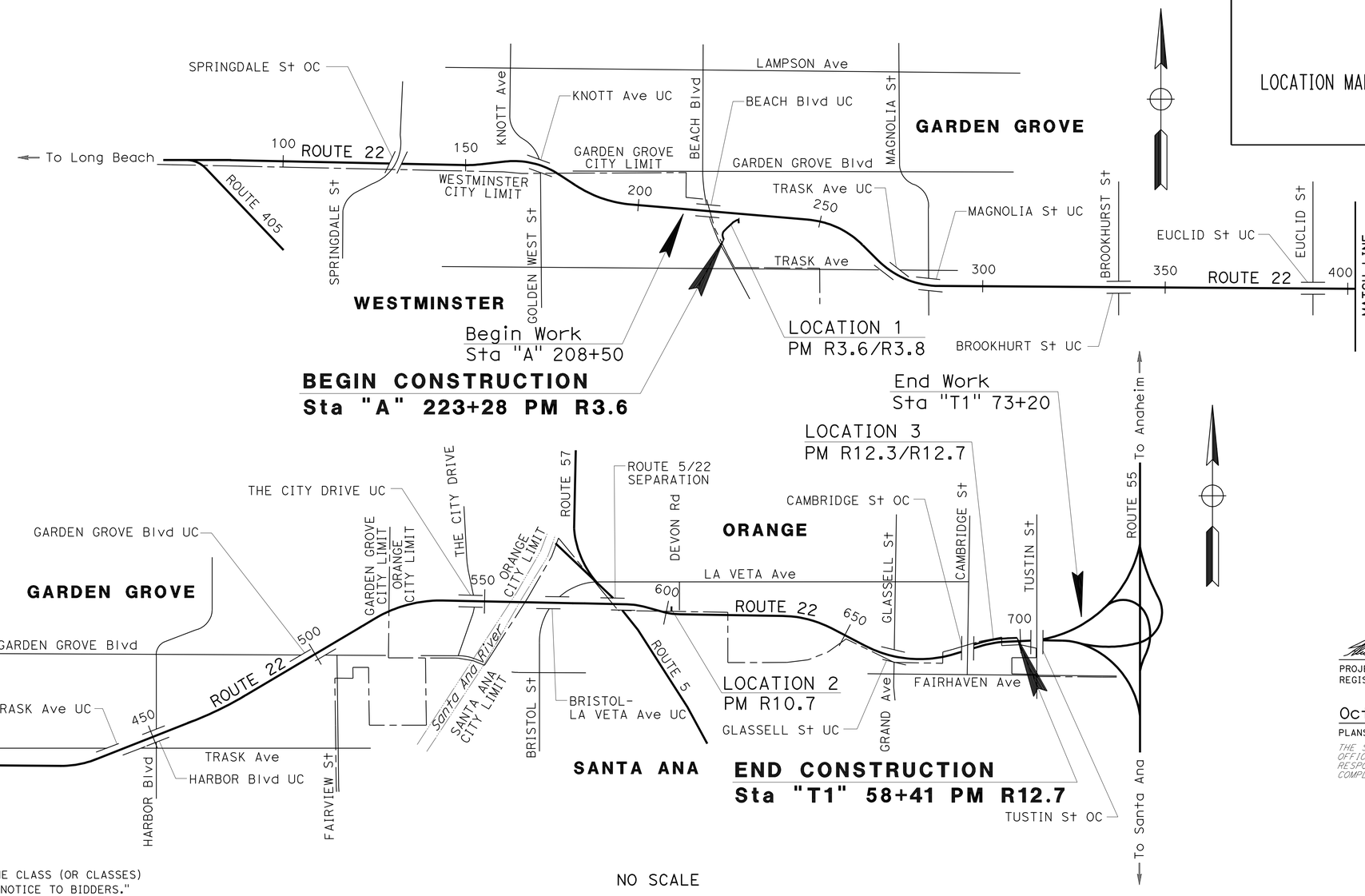

THE CONTRACTOR SHALL POSSESS THE CLASS (OR CLASSES) OF LICENSE AS SPECIFIED IN THE "NOTICE TO BIDDERS."

NO SCALE

PROJECT ENGINEER REGISTERED CIVIL ENGINEER — DATE 05/05/09

October 26, 2009
PLANS APPROVAL DATE

REGISTERED PROFESSIONAL ENGINEER — ALAEDIN MOUBAYED — No. 55268 — Exp. 9/30/10 — CIVIL — STATE OF CALIFORNIA

THE STATE OF CALIFORNIA OR ITS OFFICERS OR AGENTS SHALL NOT BE RESPONSIBLE FOR THE ACCURACY OR COMPLETENESS OF SCANNED COPIES OF THIS PLAN SHEET.

PBS&J
625 THE CITY DRIVE SOUTH, SUITE 200
ORANGE, CA 92868

ORANGE COUNTY TRANSPORTATION AUTHORITY
550 SOUTH MAIN STREET
ORANGE, CA 92863

CONTRACT No. **12-0J9604**

APPROVED AS TO IMPACT ON STATE FACILITIES AND CONFORMANCE WITH APPLICABLE STATE STANDARDS AND PRACTICES AND THAT TECHNICAL OVERSIGHT WAS PERFORMED.

CONSULTANT DESIGN ENGINEER	REGISTRATION No.	LICENSE Exp DATE	DATE SIGNED
ALAEDIN MOUBAYED	46382	03/31/11	06-18-09

CALTRANS DESIGN OVERSIGHT APPROVAL: LISA ALVISO

LAST REVISION 05-05-09 — DATE PLOTTED => 02-NOV-2009 — TIME PLOTTED => 10:40

Dist	COUNTY	ROUTE	POST MILES TOTAL PROJECT	SHEET No.	TOTAL SHEETS
12	Ora	22	R3.6/R12.7	2	61

REGISTERED CIVIL ENGINEER 5/5/09 DATE

10-26-09
PLANS APPROVAL DATE

REGISTERED PROFESSIONAL ENGINEER MICHAEL C. HAN No. C61893 Exp. 9/30/11 CIVIL STATE OF CALIFORNIA

THE STATE OF CALIFORNIA OR ITS OFFICERS OR AGENTS SHALL NOT BE RESPONSIBLE FOR THE ACCURACY OR COMPLETENESS OF SCANNED COPIES OF THIS PLAN SHEET.

ORANGE COUNTY
TRANSPORTATION AUTHORITY
550 SOUTH MAIN STREET
ORANGE, CA 92863

RMC, INC.
6 HUTTON CENTRE DRIVE
SUITE 1250
SANTA ANA, CA 92707

NOTE:
SEE SOUNDWALL SHEETS FOR SOUNDWALL DETAILS.

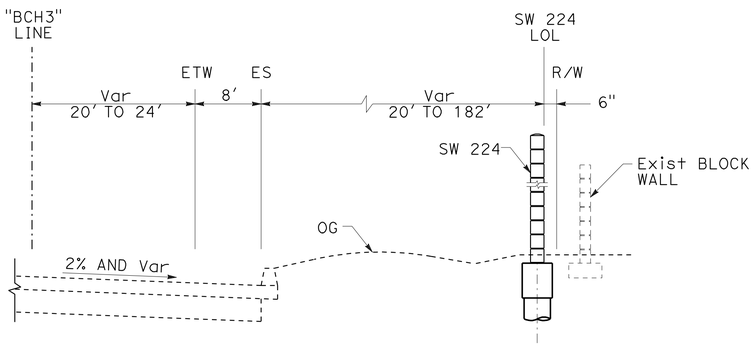

SW 224
Sta 17+77 TO 24+24.02
LOCATION 1

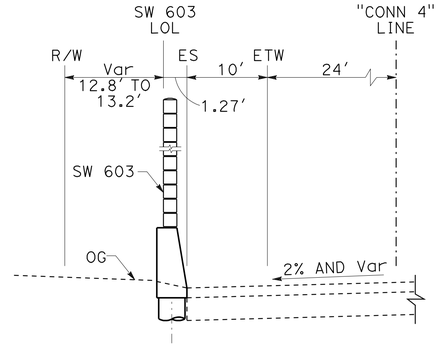

SW 603
Sta 10+35.86 TO 10+47.41
LOCATION 2

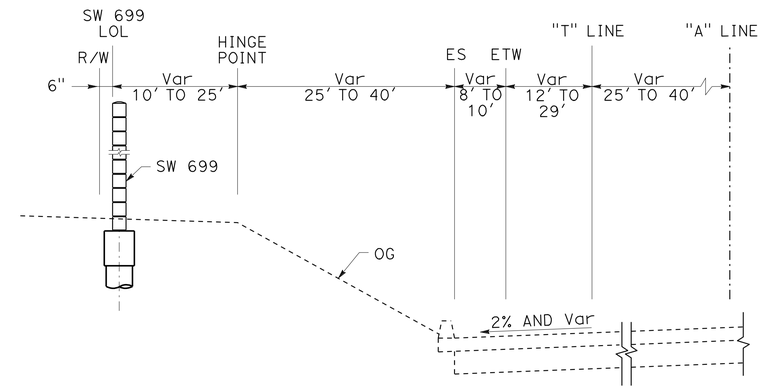

SW 699
Sta 20+68.91 TO 28+80.15
LOCATION 3

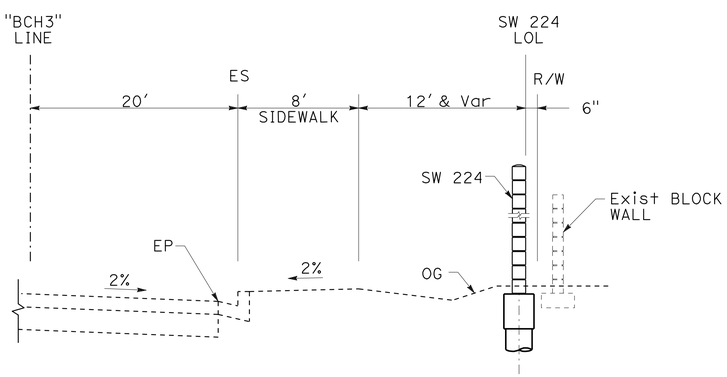

SW 224
Sta 16+42.85 TO 17+77
LOCATION 1

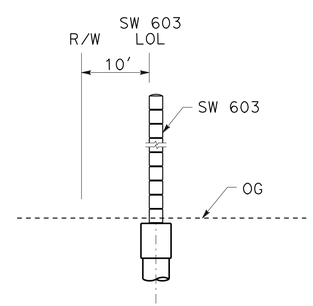

SW 603
Sta 10+00 TO 10+35.86
LOCATION 2

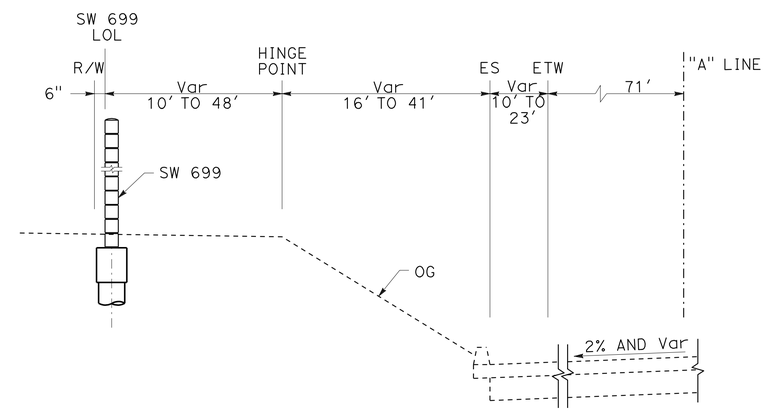

SW 699
Sta 8+70.91 TO 20+68.91
LOCATION 3

TYPICAL CROSS SECTIONS

NO SCALE

X-1

REVISED BY	DATE REVISED
MH	5/5/09

CALCULATED-DESIGNED BY: MICHAEL HAN
CHECKED BY: JOSEPH SAWTELLE
CONSULTANT FUNCTIONAL SUPERVISOR: JAMAL SALMAN

STATE OF CALIFORNIA - DEPARTMENT OF TRANSPORTATION
Caltrans

LAST REVISION 05-05-09
DATE PLOTTED => 02-NOV-2009
TIME PLOTTED => 10:40

Dist	COUNTY	ROUTE	POST MILES TOTAL PROJECT	SHEET No.	TOTAL SHEETS
12	Ora	22	R3.6/R12.7	3	61

REGISTERED CIVIL ENGINEER 05-05-09 DATE

10-26-09
PLANS APPROVAL DATE

REGISTERED PROFESSIONAL ENGINEER ALAEDIN MOUBAYED No. 55268 Exp. 9/30/10 CIVIL STATE OF CALIFORNIA

THE STATE OF CALIFORNIA OR ITS OFFICERS OR AGENTS SHALL NOT BE RESPONSIBLE FOR THE ACCURACY OR COMPLETENESS OF SCANNED COPIES OF THIS PLAN SHEET.

ORANGE COUNTY
TRANSPORTATION AUTHORITY
550 SOUTH MAIN STREET
ORANGE, CA 92863

PBS&J
625 THE CITY DRIVE
SOUTH, SUITE 200
ORANGE, CA 92868

NOTES:

1. PERMANENT EROSION CONTROL WILL BE INSTALLED AS AREAS DETERMINED TO BE SUBSTANTIALLY COMPLETED.
2. FIELD CONDITIONS MAY NECESSITATE MODIFICATIONS TO THESE DRAWINGS.
3. THE INFORMATION ON THIS PLAN INTENDED TO BE USED AS GUIDLEINES FOR THE CONTRACTOR AND SUBCONTRACTORS.

LEGEND

- TEMPORARY DRAINAGE INLET PROTECTION
- SURFACE FLOW DIRECTION
- GB — TEMPORARY GRAVEL BAGS
- DISCHARGE POINT
- FR — TEMPORARY FIBER ROLLS
- STABILIZED CONSTRUCTION ENTRANCE/EXIT
- CWM WASH CWM — Conc WASH-OUT AREA

WATER POLLUTION CONTROL QUANTITIES		
ITEM DESCRIPTION	UNIT	ESITIMATED QUANTITY
TEMPORARY GRAVEL BAG BERM	LF	780
TEMPORARY CONSTRUCTION ENTRANCE	EA	1
TEMPORARY FIBER ROLLS	LF	1,520
TEMPORARY DRAINAGE INLET PROTECTION	EA	16
TEMPORARY Conc WASHOUT BIN	EA	1

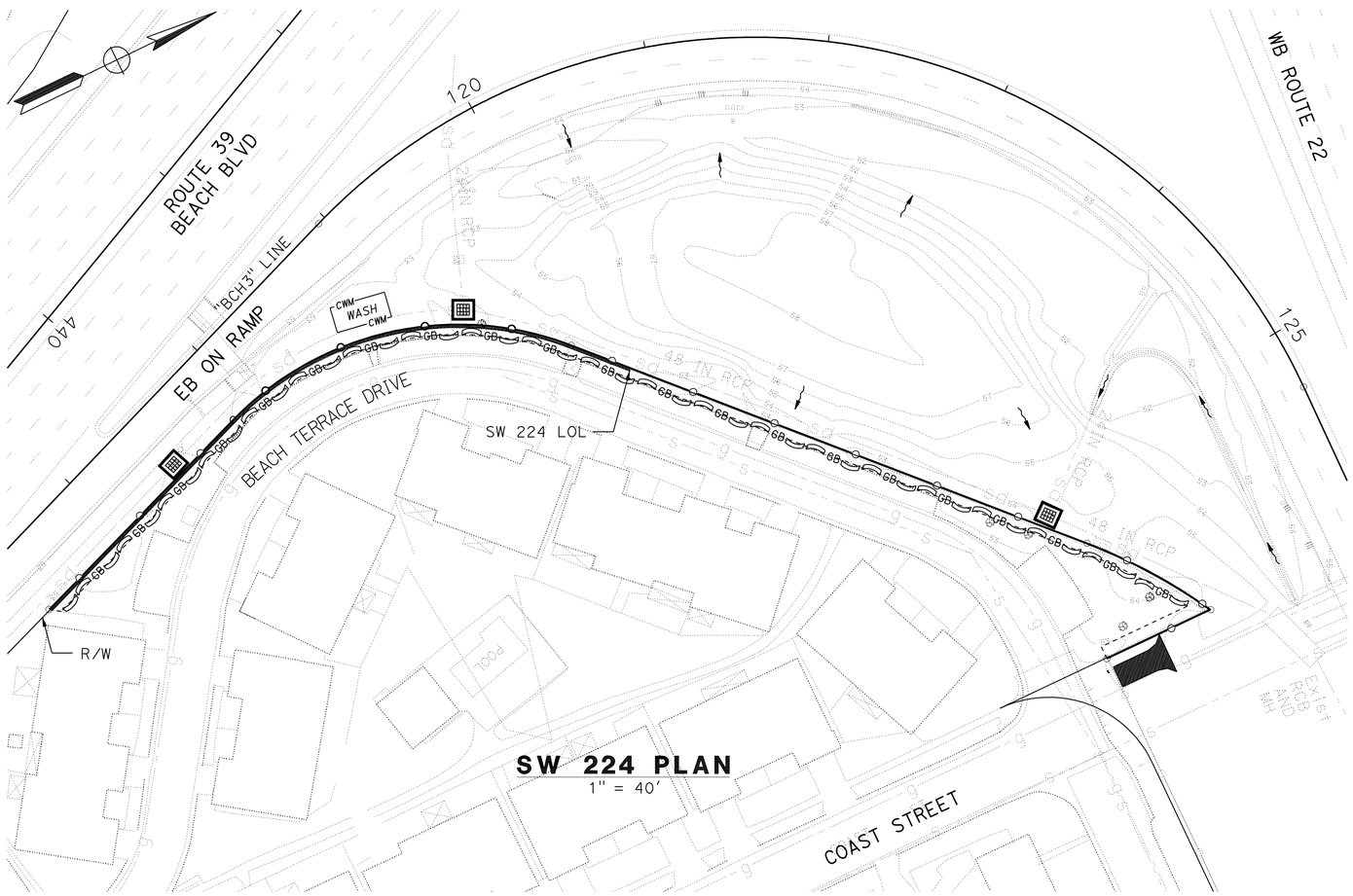

SW 224 PLAN
1" = 40'

SW 603 PLAN
1" = 40'

TEMPORARY WATER POLLUTION CONTROL PLAN

SCALE AS SHOWN

WPC-1

THIS PLAN ACCURATE FOR TEMPORARY WATER POLLUTION CONTROL WORK ONLY.

STATE OF CALIFORNIA - DEPARTMENT OF TRANSPORTATION
Caltrans

CONSULTANT FUNCTIONAL SUPERVISOR: ALAEDIN MOUBAYED
CALCULATED-DESIGNED BY: ALAEDIN MOUBAYED
CHECKED BY: SAM XIE
REVISED BY: IK
DATE REVISED: 05-05-09

LAST REVISION 05-05-09
DATE PLOTTED => 02-NOV-2009
TIME PLOTTED => 10:41

Dist	COUNTY	ROUTE	POST MILES TOTAL PROJECT	SHEET No.	TOTAL SHEETS
12	Ora	22	R3.6/R12.7	4	61

REGISTERED CIVIL ENGINEER 05-05-09 DATE

10-26-09
PLANS APPROVAL DATE

REGISTERED PROFESSIONAL ENGINEER
ALAEDIN MOUBAYED
No. 55268
Exp. 9/30/10
CIVIL
STATE OF CALIFORNIA

THE STATE OF CALIFORNIA OR ITS OFFICERS OR AGENTS SHALL NOT BE RESPONSIBLE FOR THE ACCURACY OR COMPLETENESS OF SCANNED COPIES OF THIS PLAN SHEET.

ORANGE COUNTY
TRANSPORTATION AUTHORITY
550 SOUTH MAIN STREET
ORANGE, CA 92863

PBS&J
625 THE CITY DRIVE
SOUTH, SUITE 200
ORANGE, CA 92868

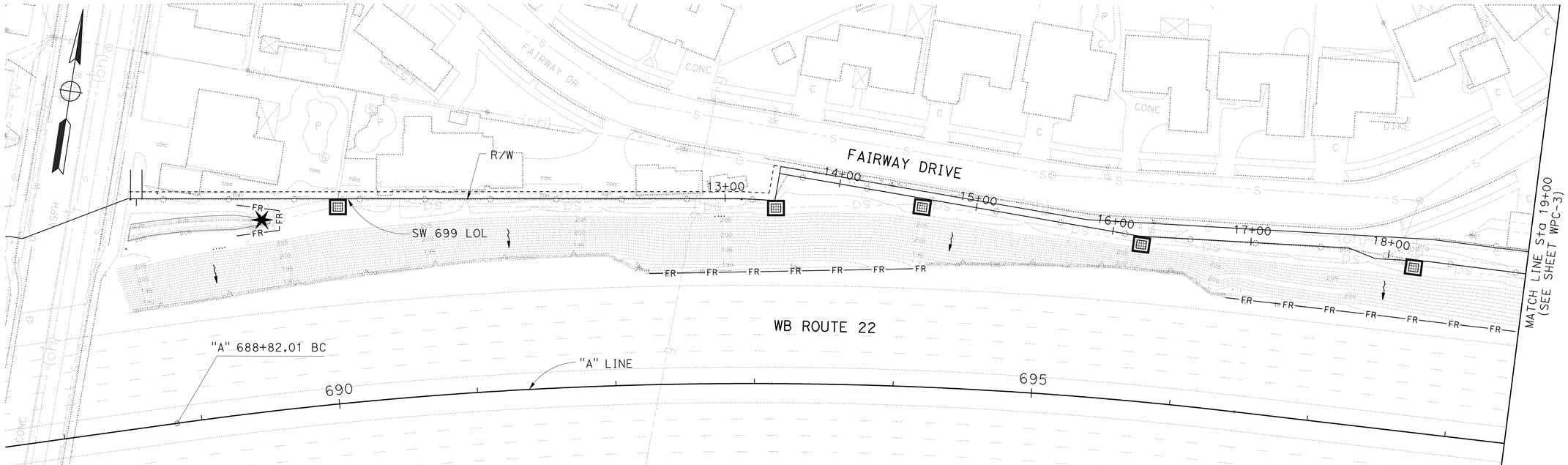

PLAN
1" = 40'

THIS PLAN ACCURATE FOR TEMPORARY WATER POLLUTION CONTROL WORK ONLY.

TEMPORARY WATER POLLUTION CONTROL PLAN
SCALE AS SHOWN

WPC-2

REVISED BY	IK
DATE REVISED	05-05-09
CALCULATED-DESIGNED BY	ALAEDIN MOUBAYED
CHECKED BY	SAM XIE
CONSULTANT FUNCTIONAL SUPERVISOR	ALAEDIN MOUBAYED

STATE OF CALIFORNIA - DEPARTMENT OF TRANSPORTATION
Caltrans

LAST REVISION 05-05-09
DATE PLOTTED => 02-NOV-2009
TIME PLOTTED => 10:41

Dist	COUNTY	ROUTE	POST MILES TOTAL PROJECT	SHEET No.	TOTAL SHEETS
12	Ora	22	R3.6/R12.7	5	61

REGISTERED CIVIL ENGINEER 05-05-09 DATE

10-26-09
PLANS APPROVAL DATE

REGISTERED PROFESSIONAL ENGINEER
ALAEDIN MOUBAYED
No. 55268
Exp. 9/30/10
CIVIL
STATE OF CALIFORNIA

THE STATE OF CALIFORNIA OR ITS OFFICERS OR AGENTS SHALL NOT BE RESPONSIBLE FOR THE ACCURACY OR COMPLETENESS OF SCANNED COPIES OF THIS PLAN SHEET.

ORANGE COUNTY
TRANSPORTATION AUTHORITY
550 SOUTH MAIN STREET
ORANGE, CA 92863

PBS&J
625 THE CITY DRIVE
SOUTH, SUITE 200
ORANGE, CA 92868

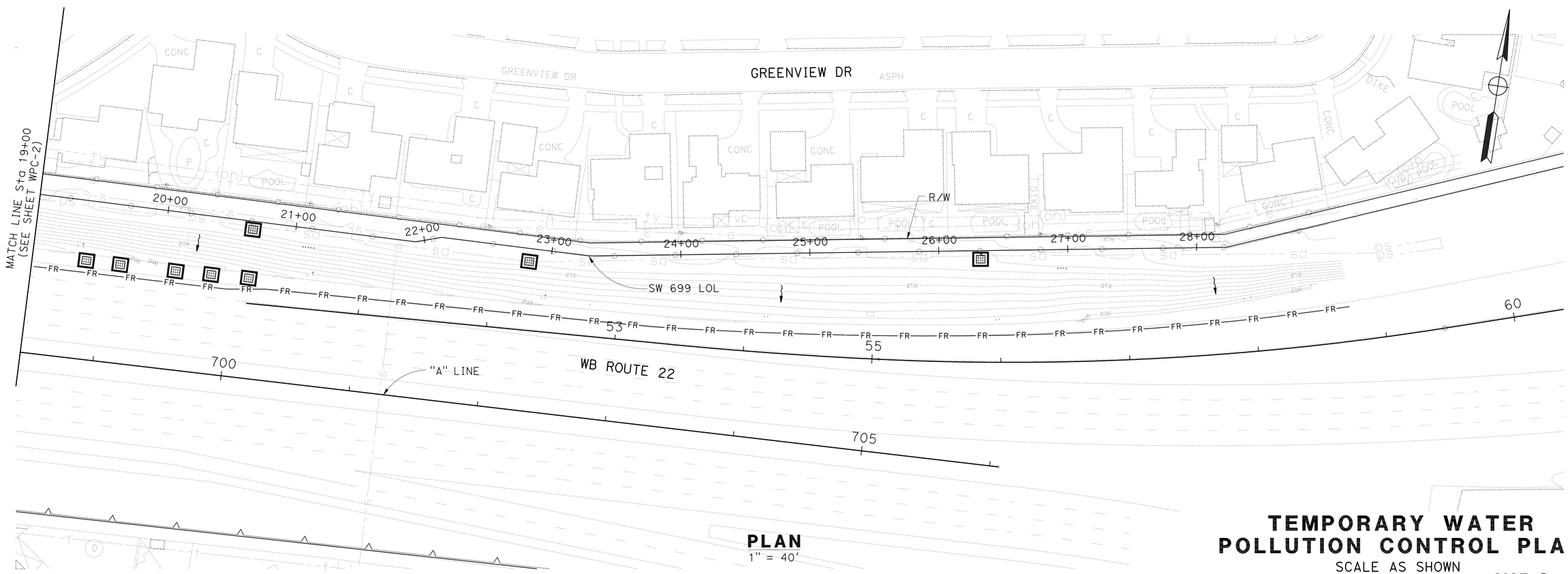

PLAN
1" = 40'

THIS PLAN ACCURATE FOR TEMPORARY WATER POLLUTION CONTROL WORK ONLY.

TEMPORARY WATER POLLUTION CONTROL PLAN

SCALE AS SHOWN

WPC-3

STATE OF CALIFORNIA - DEPARTMENT OF TRANSPORTATION
Caltrans

CONSULTANT FUNCTIONAL SUPERVISOR: ALAEDIN MOUBAYED
CALCULATED-DESIGNED BY: ALAEDIN MOUBAYED
CHECKED BY: SAM XIE
REVISED BY: IK
DATE REVISED: 05-05-09

LAST REVISION 05-05-09
DATE PLOTTED => 02-NOV-2009
TIME PLOTTED => 10:41

Dist	COUNTY	ROUTE	POST MILES TOTAL PROJECT	SHEET No.	TOTAL SHEETS
12	Ora	22	R3.6/R12.7	6	61

REGISTERED CIVIL ENGINEER 5/5/09 DATE

10-26-09
PLANS APPROVAL DATE

REGISTERED PROFESSIONAL ENGINEER MICHAEL C. HAN No. C61893 Exp. 9/30/11 CIVIL STATE OF CALIFORNIA

THE STATE OF CALIFORNIA OR ITS OFFICERS OR AGENTS SHALL NOT BE RESPONSIBLE FOR THE ACCURACY OR COMPLETENESS OF SCANNED COPIES OF THIS PLAN SHEET.

ORANGE COUNTY
TRANSPORTATION AUTHORITY
550 SOUTH MAIN STREET
ORANGE, CA 92863

RMC, INC.
6 HUTTON CENTRE DRIVE
SUITE 1250
SANTA ANA, CA 92707

NOTE:
FOR COMPLETE RIGHT OF WAY AND ACCURATE ACCESS DATA, SEE RIGHT OF WAY RECORD MAPS AT DISTRICT OFFICE.

THIS PLAN ACCURATE FOR UTILITIES WORK ONLY.

ABBREVIATIONS:

TV	TELEVISION
UG	UNDERGROUND

NOTES:

1. FOR COMPLETE RIGHT OF WAY AND ACCURATE ACCESS DATA, SEE RIGHT OF WAY RECORD MAPS AT DISTRICT OFFICE.
2. UTILITY OWNERSHIP ON THIS PROJECT:

OCSD	ORANGE COUNTY SANITATION DISTRICT
SBC	SOUTHWESTERN BELL CORPORATION
SCE	SOUTHERN CALIFORNIA EDISON
SCG	SOUTHERN CALIFORNIA GAS
TWC	TIME WARNER CABLE

UTILITY PLAN

SCALE: 1"=50'

U-1

STATE OF CALIFORNIA - DEPARTMENT OF TRANSPORTATION
Caltrans

CONSULTANT FUNCTIONAL SUPERVISOR	CALCULATED-DESIGNED BY	CHECKED BY	REVISED BY	DATE REVISED
JAMAL SALMAN	MICHAEL HAN	JOSEPH SAWTELLE	MH	5/5/09

LAST REVISION 05-05-09 | DATE PLOTTED => 02-NOV-2009 | TIME PLOTTED => 10:41

NOTE:
FOR COMPLETE RIGHT OF WAY AND ACCURATE ACCESS DATA, SEE RIGHT OF WAY RECORD MAPS AT DISTRICT OFFICE.

Dist	COUNTY	ROUTE	POST MILES TOTAL PROJECT	SHEET No.	TOTAL SHEETS
12	Ora	22	R3.6/R12.7	7	61

REGISTERED CIVIL ENGINEER 5/5/09 DATE

10-26-09
PLANS APPROVAL DATE

REGISTERED PROFESSIONAL ENGINEER MICHAEL C. HAN No. C61893 Exp. 9/30/11 CIVIL STATE OF CALIFORNIA

THE STATE OF CALIFORNIA OR ITS OFFICERS OR AGENTS SHALL NOT BE RESPONSIBLE FOR THE ACCURACY OR COMPLETENESS OF SCANNED COPIES OF THIS PLAN SHEET.

ORANGE COUNTY
TRANSPORTATION AUTHORITY
550 SOUTH MAIN STREET
ORANGE, CA 92863

RMC, INC.
6 HUTTON CENTRE DRIVE
SUITE 1250
SANTA ANA, CA 92707

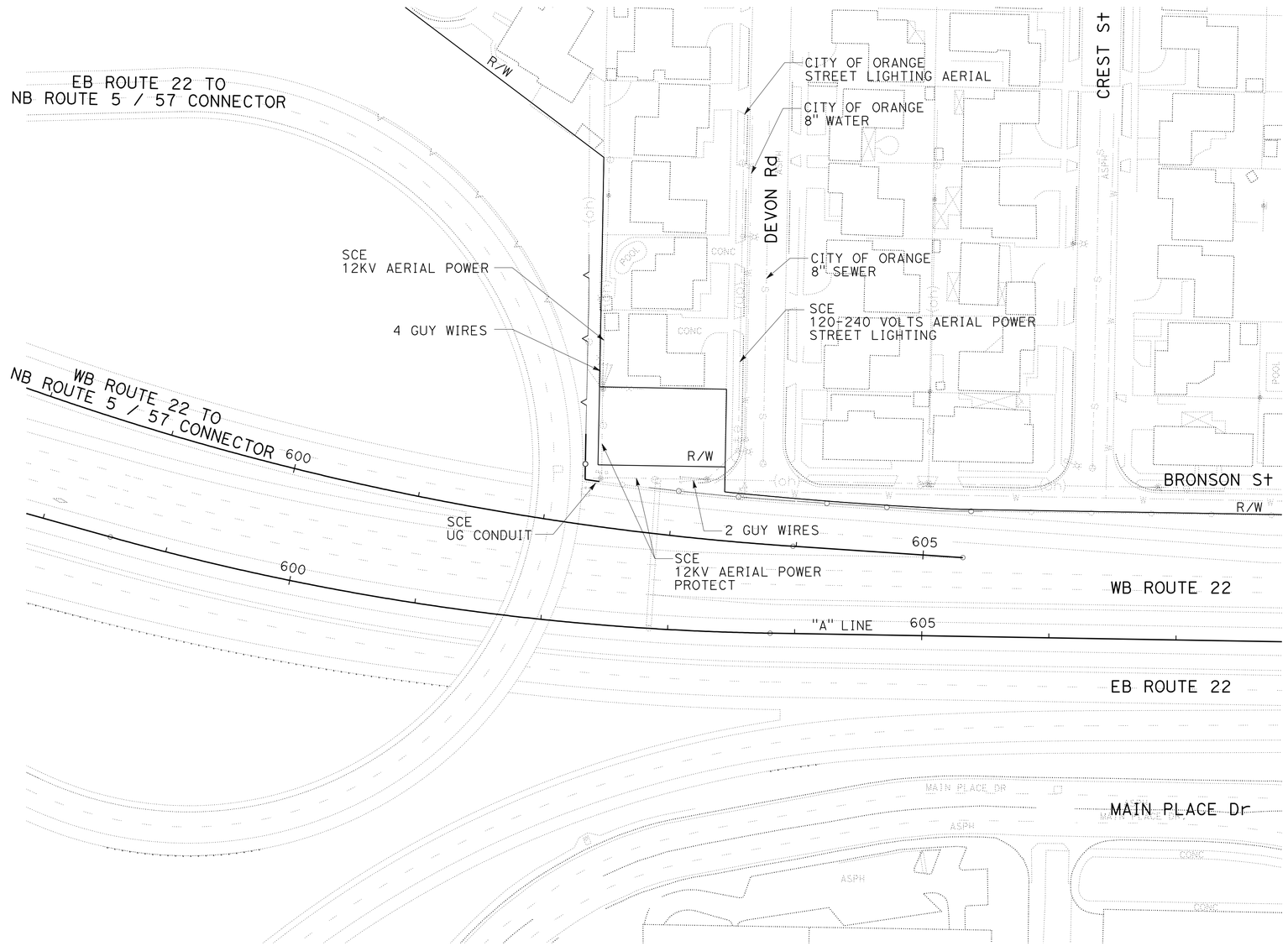

THIS PLAN ACCURATE FOR UTILITIES WORK ONLY.

UTILITY PLAN

SCALE: 1"=50'

U-2

MICHAEL HAN	JOSEPH SAWTELLE	REVISED BY MH	DATE REVISED 5/5/09
CALCULATED-DESIGNED BY	CHECKED BY		
CONSULTANT FUNCTIONAL SUPERVISOR	JAMAL SALMAN		

STATE OF CALIFORNIA - DEPARTMENT OF TRANSPORTATION
Caltrans

LAST REVISION 05-05-09 | DATE PLOTTED => 02-NOV-2009 | TIME PLOTTED => 10:41

Dist	COUNTY	ROUTE	POST MILES TOTAL PROJECT	SHEET No.	TOTAL SHEETS
12	Ora	22	R3.6/R12.7	8	61

REGISTERED CIVIL ENGINEER 5/5/09 DATE

10-26-09
PLANS APPROVAL DATE

REGISTERED PROFESSIONAL ENGINEER MICHAEL C. HAN No. C61893 Exp. 9/30/11 CIVIL STATE OF CALIFORNIA

THE STATE OF CALIFORNIA OR ITS OFFICERS OR AGENTS SHALL NOT BE RESPONSIBLE FOR THE ACCURACY OR COMPLETENESS OF SCANNED COPIES OF THIS PLAN SHEET.

ORANGE COUNTY
TRANSPORTATION AUTHORITY
550 SOUTH MAIN STREET
ORANGE, CA 92863

RMC, INC.
6 HUTTON CENTRE DRIVE
SUITE 1250
SANTA ANA, CA 92707

NOTE:
FOR COMPLETE RIGHT OF WAY AND ACCURATE ACCESS DATA, SEE RIGHT OF WAY RECORD MAPS AT DISTRICT OFFICE.

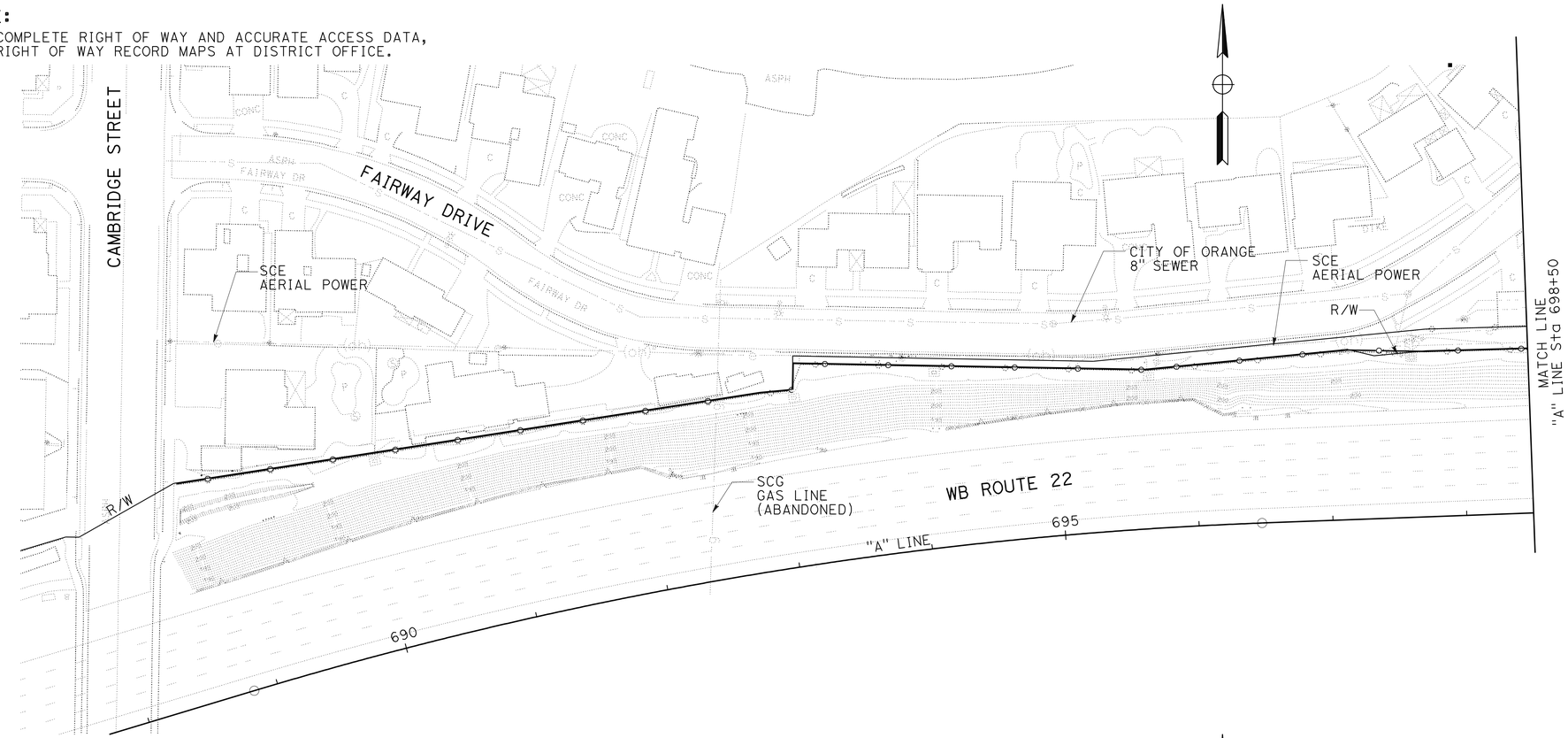

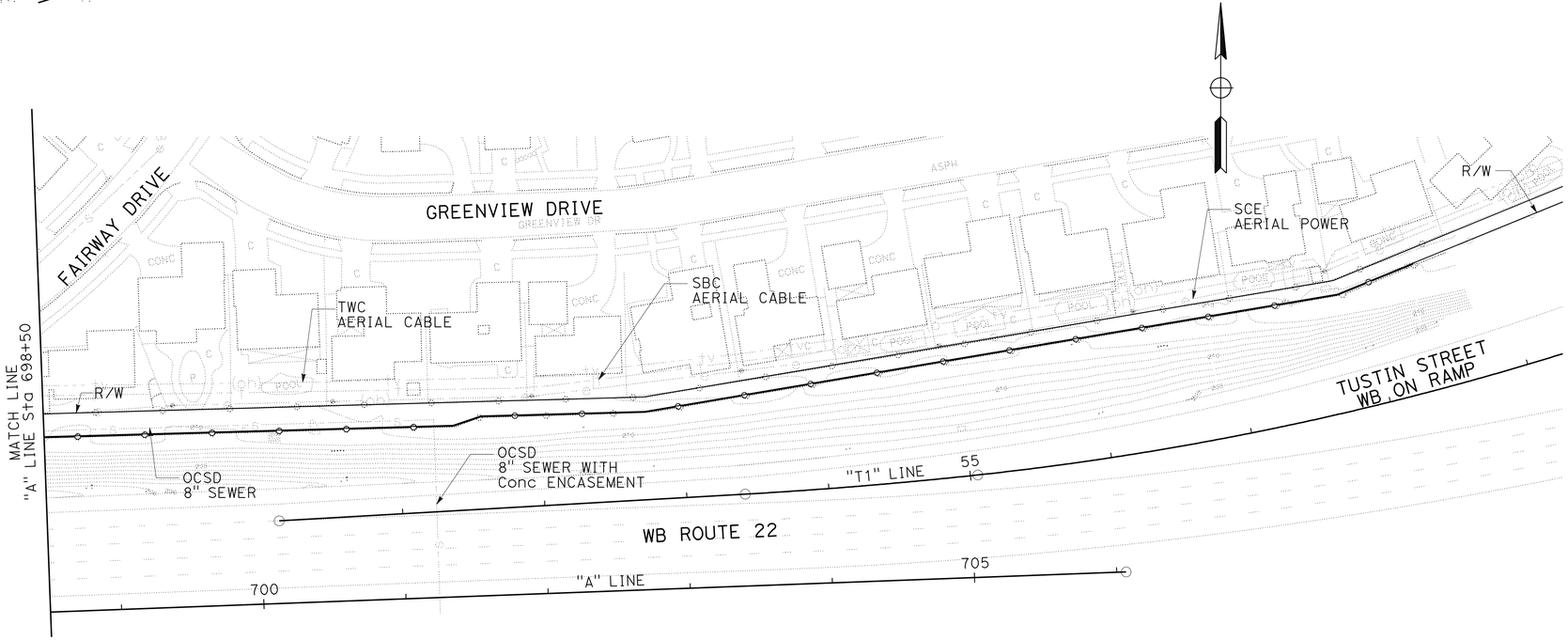

THIS PLAN ACCURATE FOR UTILITIES WORK ONLY.

UTILITY PLAN

SCALE: 1"=50'

U-3

REVISED BY	MH	MICHAEL HAN	CALCULATED-DESIGNED BY
DATE REVISED	5/5/09	JOSEPH SAWTELLE	CHECKED BY

CONSULTANT FUNCTIONAL SUPERVISOR: JAMAL SALMAN

STATE OF CALIFORNIA - DEPARTMENT OF TRANSPORTATION

Caltrans

LAST REVISION 05-05-09

DATE PLOTTED => 02-NOV-2009
TIME PLOTTED => 10:42

Dist	COUNTY	ROUTE	POST MILES TOTAL PROJECT	SHEET No.	TOTAL SHEETS
12	Ora	22	R3.6/R12.7	9	61

REGISTERED CIVIL ENGINEER 5/5/09 DATE

10-26-09
PLANS APPROVAL DATE

REGISTERED PROFESSIONAL ENGINEER MICHAEL C. HAN No. C61893 Exp. 9/30/11 CIVIL STATE OF CALIFORNIA

THE STATE OF CALIFORNIA OR ITS OFFICERS OR AGENTS SHALL NOT BE RESPONSIBLE FOR THE ACCURACY OR COMPLETENESS OF SCANNED COPIES OF THIS PLAN SHEET.

ORANGE COUNTY
TRANSPORTATION AUTHORITY
550 SOUTH MAIN STREET
ORANGE, CA 92863

RMC, INC.
6 HUTTON CENTRE DRIVE
SUITE 1250
SANTA ANA, CA 92707

NOTES:
1. LOCATIONS OF CONSTRUCTION AREA SIGNS ARE APPROXIMATE. EXACT LOCATION WILL BE DETERMINED BY THE ENGINEER.

STATIONARY MOUNTED CONSTRUCTION AREA SIGNS

SIGN No.	SIGN CODE	PANEL SIZE (INCHES)	SIGN MESSAGE	POST No.	POST SIZE (INCHES)	No. OF SIGNS
A	W20-1	48 X 48	ROAD WORK AHEAD	1	4 X 6	4
B	G20-2	48 X 24	END ROAD WORK	1	4 X 4	4
C	W21-5bR	48 X 48	RIGHT SHOULDER CLOSED AHEAD	1	4 X 6	1
D	W21-5aR	48 X 48	RIGHT SHOULDER CLOSED	1	4 X 6	1

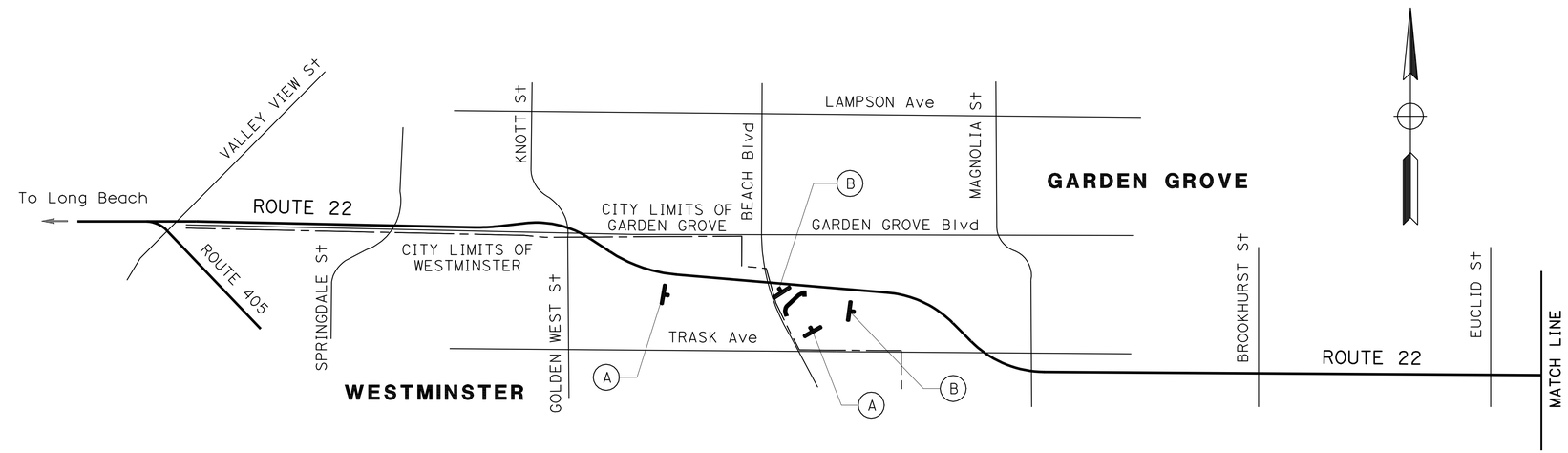

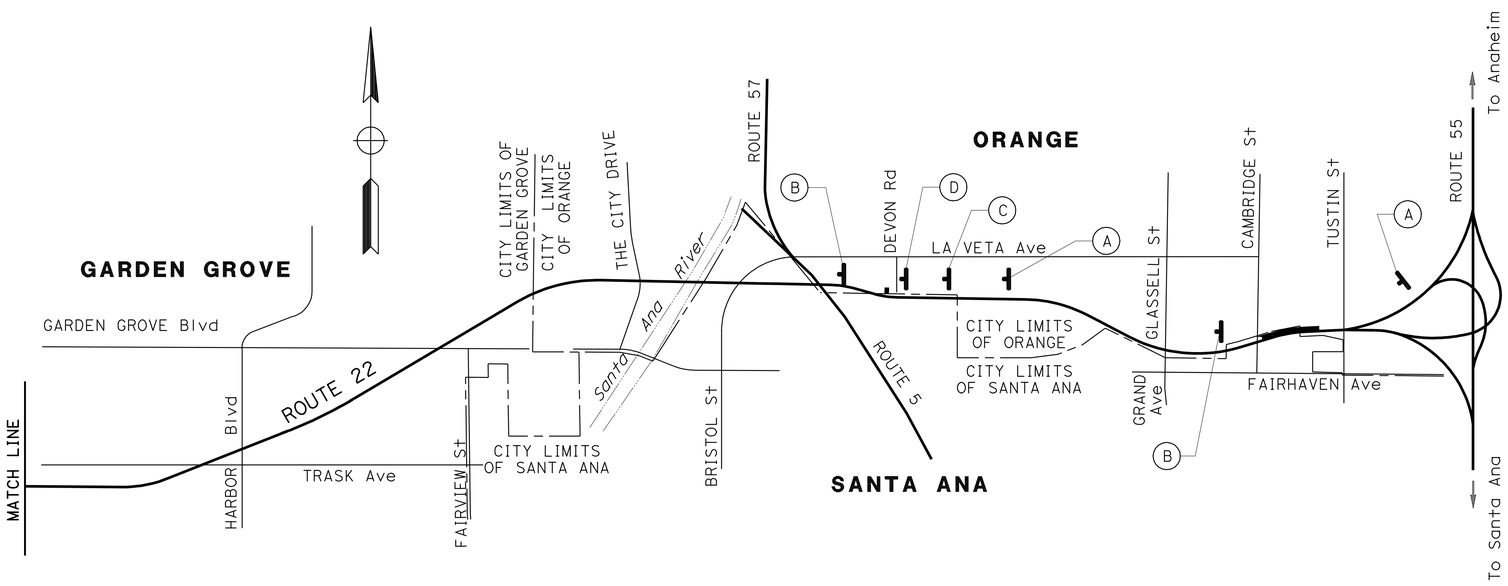

THIS PLAN ACCURATE FOR CONSTRUCTION AREA SIGN WORK ONLY.

CONSTRUCTION AREA SIGNS

NO SCALE

CS-1

REVISED BY	DATE REVISED
MH	5/5/09

MICHAEL HAN
JOSEPH SAWTELLE
CALCULATED-DESIGNED BY
CHECKED BY
CONSULTANT FUNCTIONAL SUPERVISOR
JAMAL SALMAN

STATE OF CALIFORNIA - DEPARTMENT OF TRANSPORTATION
Caltrans

LAST REVISION 05-05-09
DATE PLOTTED => 02-NOV-2009
TIME PLOTTED => 10:42

Dist	COUNTY	ROUTE	POST MILES TOTAL PROJECT	SHEET No.	TOTAL SHEETS
12	Ora	22	R3.6/R12.7	10	61

REGISTERED CIVIL ENGINEER 5/5/09 DATE

10-26-09
PLANS APPROVAL DATE

REGISTERED PROFESSIONAL ENGINEER MICHAEL C. HAN No. C61893 Exp. 9/30/11 CIVIL STATE OF CALIFORNIA

THE STATE OF CALIFORNIA OR ITS OFFICERS OR AGENTS SHALL NOT BE RESPONSIBLE FOR THE ACCURACY OR COMPLETENESS OF SCANNED COPIES OF THIS PLAN SHEET.

ORANGE COUNTY TRANSPORTATION AUTHORITY
550 SOUTH MAIN STREET
ORANGE, CA 92863

RMC, INC.
6 HUTTON CENTRE DRIVE
SUITE 1250
SANTA ANA, CA 92707

NOTE:

TEMPORARY RAILING (TYPE K) OFFSET LOCATIONS ON LAYOUT ARE MEASURED TO THE FACE OF BARRIER ADJACENT TO TRAFFIC.

LEGEND:

- DIRECTION OF TRAVEL
- CHANNELIZERS (SURFACE MOUNTED)
- TEMPORARY CRASH CUSHION (ARRAY PER PLAN)

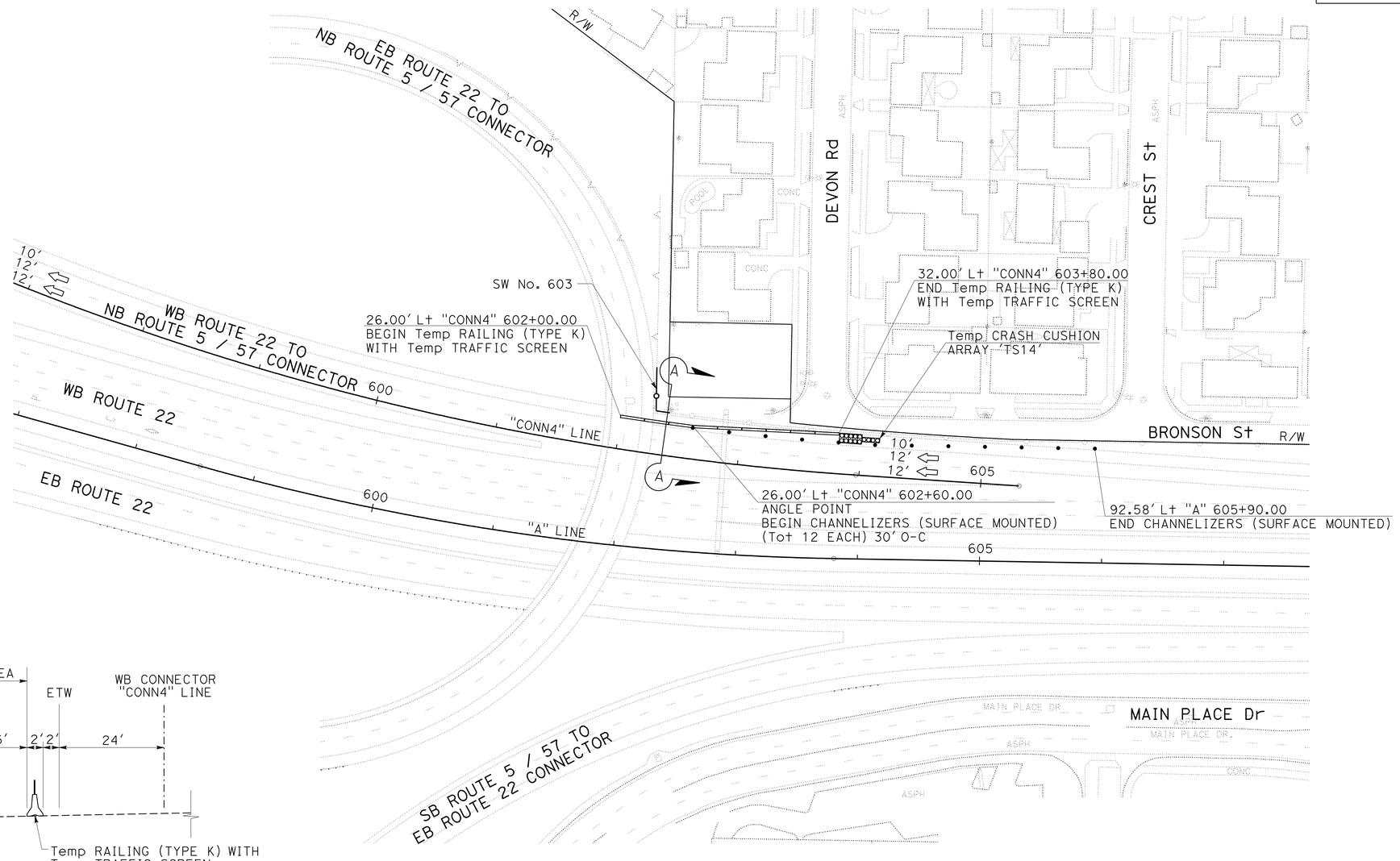

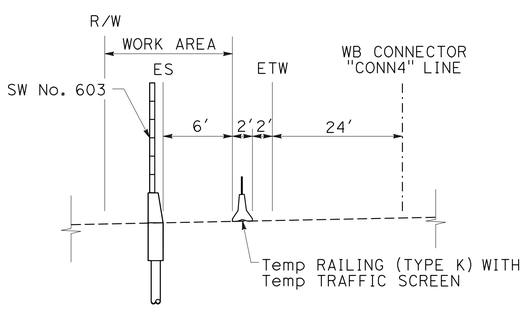

SECTION A-A
NO SCALE

STAGE CONSTRUCTION AND TRAFFIC HANDLING PLAN

SCALE: 1"=50'

THIS PLAN ACCURATE FOR STAGE CONSTRUCTION AND TRAFFIC HANDLING WORK ONLY.

SC-1

MICHAEL HAN	JOSEPH SAWTELLE	JAMAL SALMAN	
REVISED BY	DATE REVISED	CALCULATED-DESIGNED BY	CHECKED BY
MH	5/5/09	CONSULTANT FUNCTIONAL SUPERVISOR	

STATE OF CALIFORNIA - DEPARTMENT OF TRANSPORTATION
Caltrans

LAST REVISION 05-05-09 | DATE PLOTTED => 02-NOV-2009 | TIME PLOTTED => 10:42

Dist	COUNTY	ROUTE	POST MILES TOTAL PROJECT	SHEET No.	TOTAL SHEETS
12	Ora	22	R3.6/R12.7	11	61

REGISTERED CIVIL ENGINEER 5/5/09 DATE

10-26-09
PLANS APPROVAL DATE

REGISTERED PROFESSIONAL ENGINEER MICHAEL C. HAN No. C61893 Exp. 9/30/11 CIVIL STATE OF CALIFORNIA

THE STATE OF CALIFORNIA OR ITS OFFICERS OR AGENTS SHALL NOT BE RESPONSIBLE FOR THE ACCURACY OR COMPLETENESS OF SCANNED COPIES OF THIS PLAN SHEET.

ORANGE COUNTY
TRANSPORTATION AUTHORITY
550 SOUTH MAIN STREET
ORANGE, CA 92863

RMC, INC.
6 HUTTON CENTRE DRIVE
SUITE 1250
SANTA ANA, CA 92707

STAGE CONSTRUCTION QUANTITIES

SHEET No.	LOCATION	Temp RAILING (TYPE K)	Temp TRAFFIC SCREEN	CHANNELIZER (SURFACE MOUNTED)	Temp CRASH CUSHION MODULE
		LF	LF	EA	EA
SC-1	"CONN4" 602+00 TO "A" 605+90	180	180	12	14
	TOTAL	180	180	12	14

STAGE CONSTRUCTION AND TRAFFIC HANDLING QUANTITIES

SCQ-1

STATE OF CALIFORNIA - DEPARTMENT OF TRANSPORTATION
Caltrans

CONSULTANT FUNCTIONAL SUPERVISOR: JAMAL SALMAN

CALCULATED-DESIGNED BY: MICHAEL HAN
CHECKED BY: JOSEPH SAWTELLE

REVISED BY: MH
DATE REVISED: 5/5/09

LAST REVISION 05-05-09
DATE PLOTTED => 02-NOV-2009
TIME PLOTTED => 10:42

Dist	COUNTY	ROUTE	POST MILES TOTAL PROJECT	SHEET No.	TOTAL SHEETS
12	Ora	22	R3.6/R12.7	12	61

REGISTERED CIVIL ENGINEER 05-05-09 DATE

10-26-09
PLANS APPROVAL DATE

REGISTERED PROFESSIONAL ENGINEER ALAEDIN MOUBAYED No. 55268 Exp. 9/30/10 CIVIL STATE OF CALIFORNIA

THE STATE OF CALIFORNIA OR ITS OFFICERS OR AGENTS SHALL NOT BE RESPONSIBLE FOR THE ACCURACY OR COMPLETENESS OF SCANNED COPIES OF THIS PLAN SHEET.

ORANGE COUNTY TRANSPORTATION AUTHORITY
550 SOUTH MAIN STREET
ORANGE, CA 92863

PBS&J
625 THE CITY DRIVE SOUTH, SUITE 200
ORANGE, CA 92868

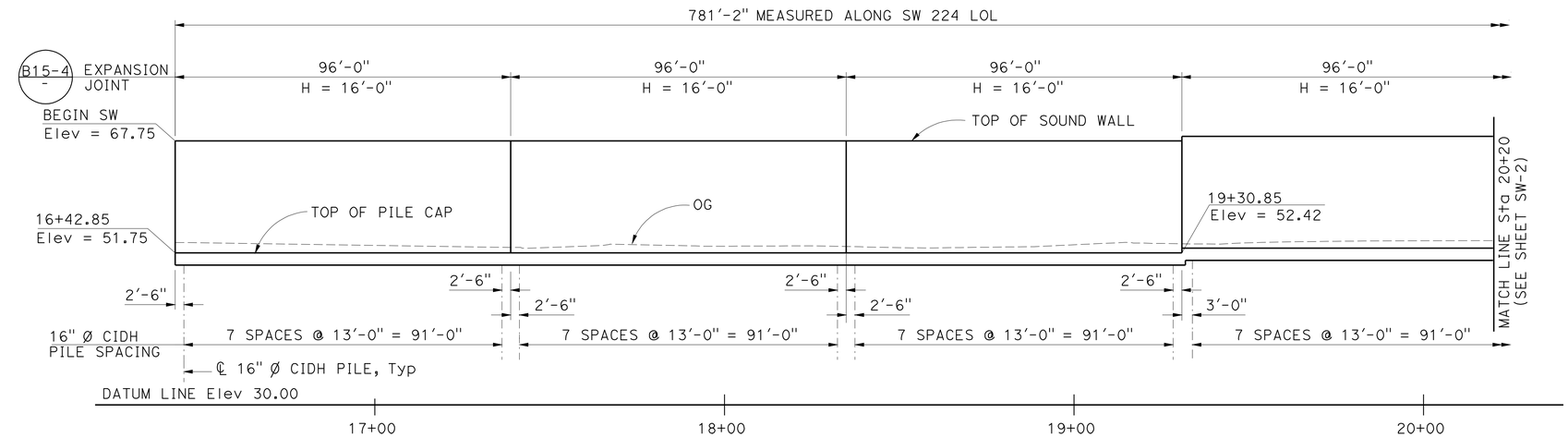

ELEVATION

Horiz 1" = 20'
Vert 1" = 10'

NOTE:

1. FOR COMPLETE RIGHT OF WAY AND ACCURATE ACCESS DATA, SEE RIGHT OF WAY RECORD MAPS AT DISTRICT OFFICE.

ABBREVIATIONS:

SBC - SOUTHWESTERN BELL CORPORATION
SCE - SOUTHERN CALIFORNIA EDISON
SCG - SOUTHERN CALIFORNIA GAS
TWC - TIME WARNER CABLE
OCSD - ORANGE COUNTY SANITATION DISTRICT

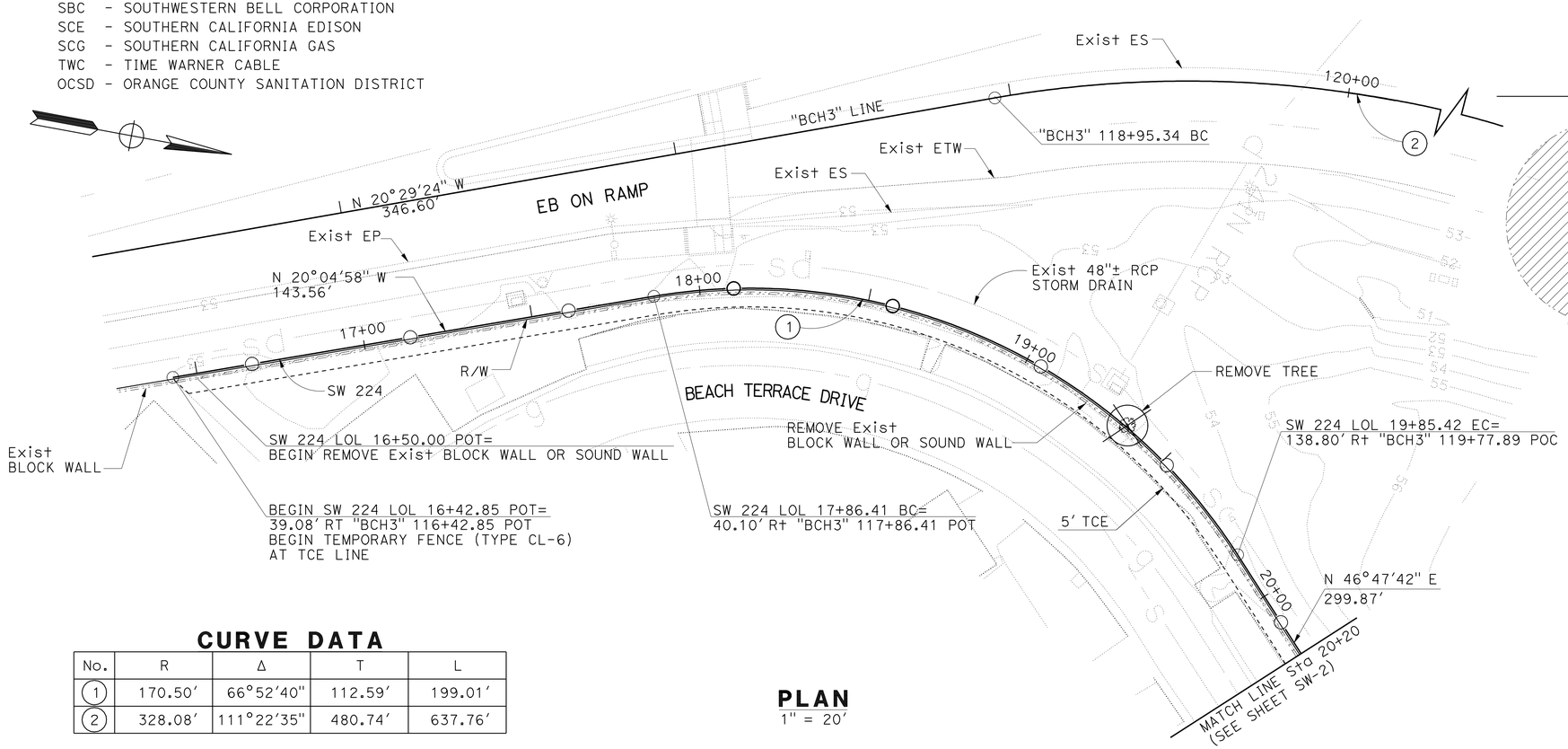

CURVE DATA

No.	R	Δ	T	L
1	170.50'	66°52'40"	112.59'	199.01'
2	328.08'	111°22'35"	480.74'	637.76'

PLAN

1" = 20'

THIS PLAN ACCURATE FOR SOUNDWALL WORK ONLY.

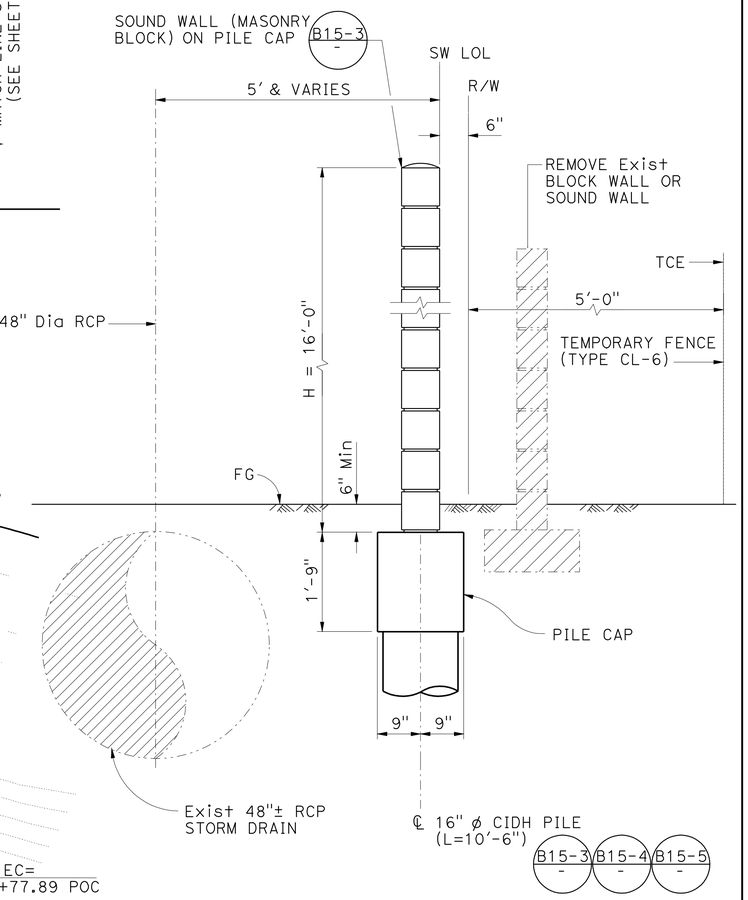

TYPICAL SECTION

¾" = 1'-0"

ABBREVIATION

TCE TEMPORARY CONSTRUCTION EASEMENT

SOUND WALL No. 224

SCALE AS SHOWN

SW-1

STATE OF CALIFORNIA - DEPARTMENT OF TRANSPORTATION

CONSULTANT FUNCTIONAL SUPERVISOR: ALAEDIN MOUBAYED

CALCULATED-DESIGNED BY: ALAEDIN MOUBAYED | CHECKED BY: SAM XIE

REVISED BY: IK | DATE REVISED: 05-05-09

LAST REVISION 05-05-09 | DATE PLOTTED => 02-NOV-2009 | TIME PLOTTED => 10:42

Dist	COUNTY	ROUTE	POST MILES TOTAL PROJECT	SHEET No.	TOTAL SHEETS
12	Ora	22	R3.6/R12.7	13	61

REGISTERED CIVIL ENGINEER 05-05-09 DATE

10-26-09
PLANS APPROVAL DATE

REGISTERED PROFESSIONAL ENGINEER ALAEDIN MOUBAYED No. 55268 Exp. 9/30/10 CIVIL STATE OF CALIFORNIA

THE STATE OF CALIFORNIA OR ITS OFFICERS OR AGENTS SHALL NOT BE RESPONSIBLE FOR THE ACCURACY OR COMPLETENESS OF SCANNED COPIES OF THIS PLAN SHEET.

ORANGE COUNTY TRANSPORTATION AUTHORITY
550 SOUTH MAIN STREET
ORANGE, CA 92863

PBS&J
625 THE CITY DRIVE SOUTH, SUITE 200
ORANGE, CA 92868

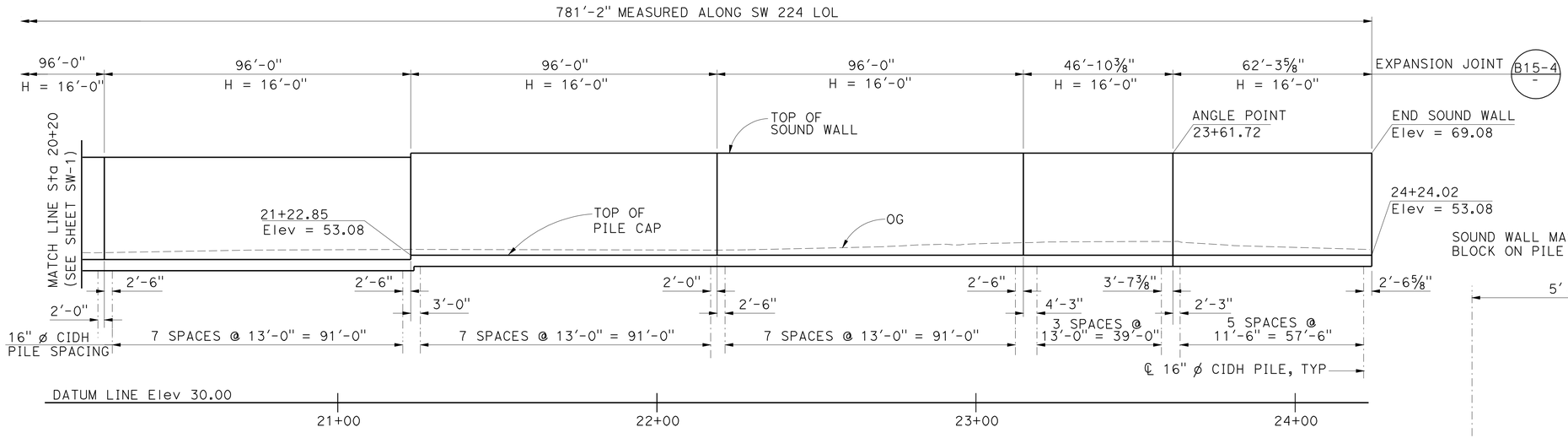

ELEVATION

Horiz 1" = 20'
Vert 1" = 10'

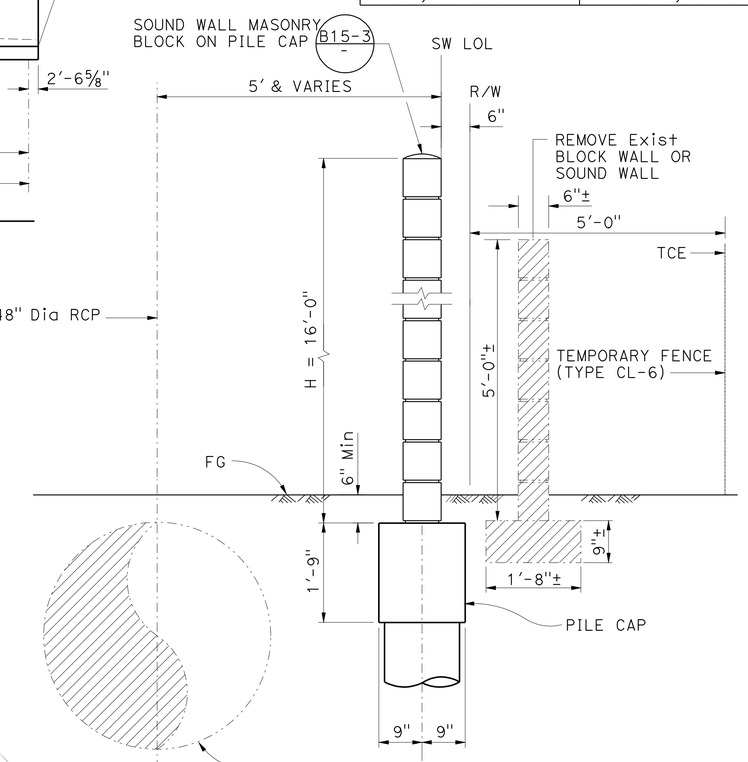

TYPICAL SECTION

¾" = 1'-0"

NOTE THIS SHEET:

1. FOR COMPLETE RIGHT OF WAY AND ACCURATE ACCESS DATA, SEE RIGHT OF WAY RECORD MAPS AT DISTRICT OFFICE.

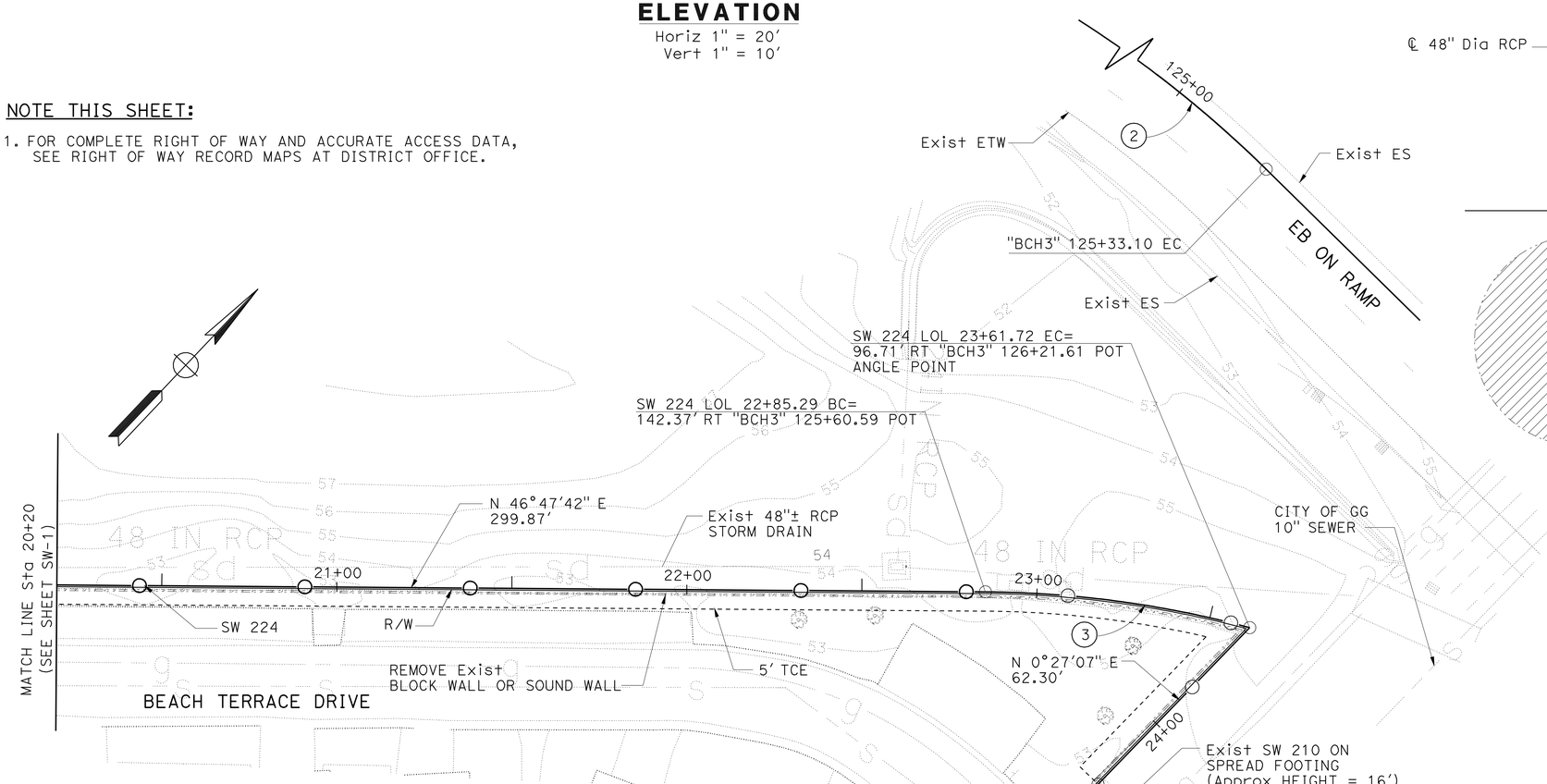

PLAN

1" = 20'

THIS PLAN ACCURATE FOR SOUNDWALL WORK ONLY.

CURVE DATA

No.	R	Δ	T	L
2	328.08'	111°22'35"	480.74'	637.76'
3	300.53'	14°34'17"	38.42'	76.43'

ABBREVIATION

TCE TEMPORARY CONSTRUCTION EASEMENT

SOUND WALL No. 224

SCALE AS SHOWN

SW-2

STATE OF CALIFORNIA - DEPARTMENT OF TRANSPORTATION
Caltrans

CONSULTANT FUNCTIONAL SUPERVISOR: ALAEDIN MOUBAYED
CALCULATED-DESIGNED BY: ALAEDIN MOUBAYED
CHECKED BY: SAM XIE
REVISED BY: IK
DATE REVISED: 05-05-09

LAST REVISION 05-05-09
DATE PLOTTED => 03-NOV-2009
TIME PLOTTED => 06:02

Dist	COUNTY	ROUTE	POST MILES TOTAL PROJECT	SHEET No.	TOTAL SHEETS
12	Ora	22	R3.6/R12.7	14	61

REGISTERED CIVIL ENGINEER 05-05-09 DATE

10-26-09
PLANS APPROVAL DATE

REGISTERED PROFESSIONAL ENGINEER ALAEDIN MOUBAYED No. 55268 Exp. 9/30/10 CIVIL STATE OF CALIFORNIA

THE STATE OF CALIFORNIA OR ITS OFFICERS OR AGENTS SHALL NOT BE RESPONSIBLE FOR THE ACCURACY OR COMPLETENESS OF SCANNED COPIES OF THIS PLAN SHEET.

ORANGE COUNTY
TRANSPORTATION AUTHORITY
550 SOUTH MAIN STREET
ORANGE, CA 92863

PBS&J
625 THE CITY DRIVE
SOUTH, SUITE 200
ORANGE, CA 92868

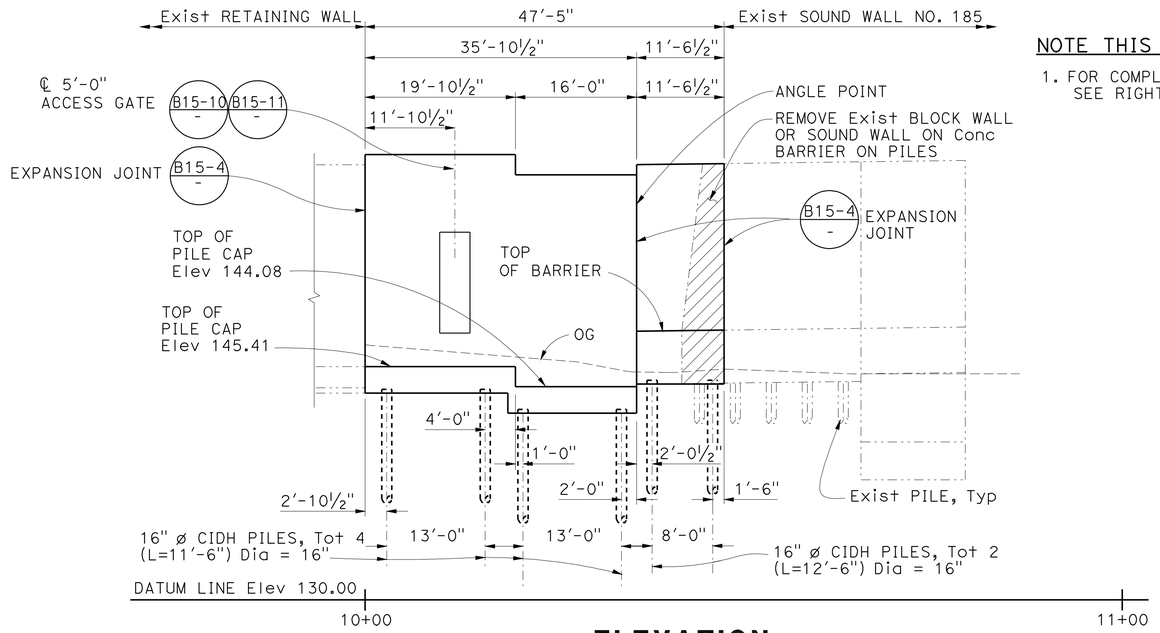

ELEVATION

Horiz 1" = 10'
Vert 1" = 5'

NOTE THIS SHEET:

1. FOR COMPLETE RIGHT OF WAY AND ACCURATE ACCESS DATA, SEE RIGHT OF WAY RECORD MAPS AT DISTRICT OFFICE.

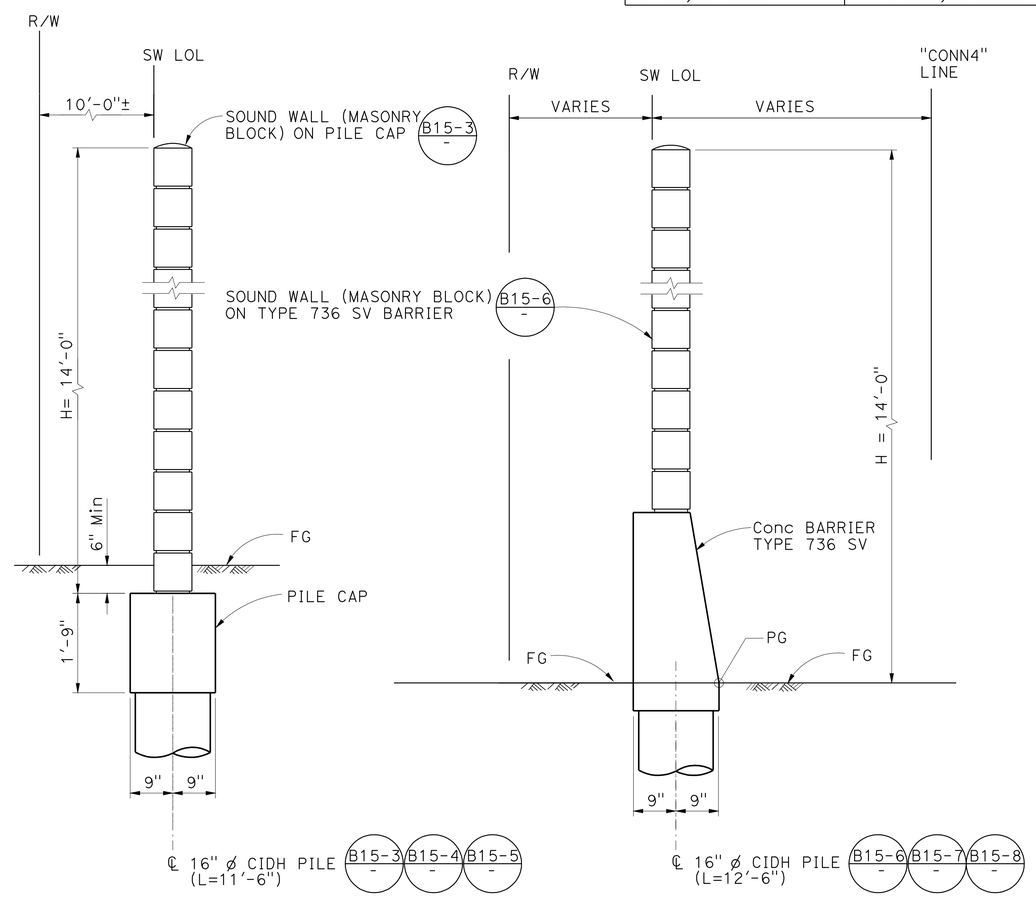

TYPICAL SECTION

SOUND WALL ON PILE CAP
SW 603 LOL 10+00.00 TO 10+35.86
¾" = 1'-0"

TYPICAL SECTION

SOUND WALL ON BARRIER
SW 603 LOL 10+35.86 TO 10+47.41
¾" = 1'-0"

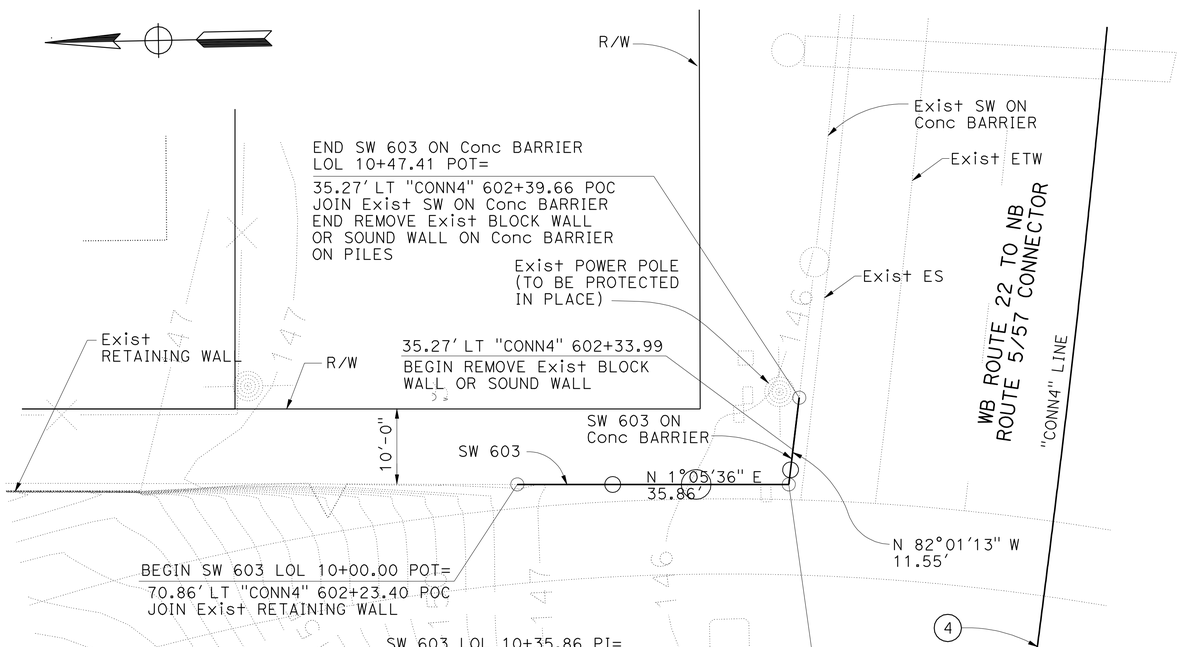

PLAN

1" = 10'

CURVE DATA

No.	R	Δ	T	L
4	2252.29'	25°42'13"	513.85'	1010.41'

THIS PLAN ACCURATE FOR SOUNDWALL WORK ONLY.

SOUND WALL No. 603

SCALE AS SHOWN

SW-3

REVISED BY	DATE REVISED
IK	05-05-09

ALAEDIN MOUBAYED — SAM XIE — CALCULATED-DESIGNED BY — CHECKED BY

CONSULTANT FUNCTIONAL SUPERVISOR: ALAEDIN MOUBAYED

STATE OF CALIFORNIA - DEPARTMENT OF TRANSPORTATION — Caltrans

LAST REVISION 05-05-09 — DATE PLOTTED => 02-NOV-2009 — TIME PLOTTED => 10:43

Dist	COUNTY	ROUTE	POST MILES TOTAL PROJECT	SHEET No.	TOTAL SHEETS
12	Ora	22	R3.6/R12.7	15	61

REGISTERED CIVIL ENGINEER 05-05-09 DATE

10-26-09
PLANS APPROVAL DATE

REGISTERED PROFESSIONAL ENGINEER ALAEDIN MOUBAYED No. 55268 Exp. 9/30/10 CIVIL STATE OF CALIFORNIA

THE STATE OF CALIFORNIA OR ITS OFFICERS OR AGENTS SHALL NOT BE RESPONSIBLE FOR THE ACCURACY OR COMPLETENESS OF SCANNED COPIES OF THIS PLAN SHEET.

ORANGE COUNTY
TRANSPORTATION AUTHORITY
550 SOUTH MAIN STREET
ORANGE, CA 92863

PBS&J
625 THE CITY DRIVE
SOUTH, SUITE 200
ORANGE, CA 92868

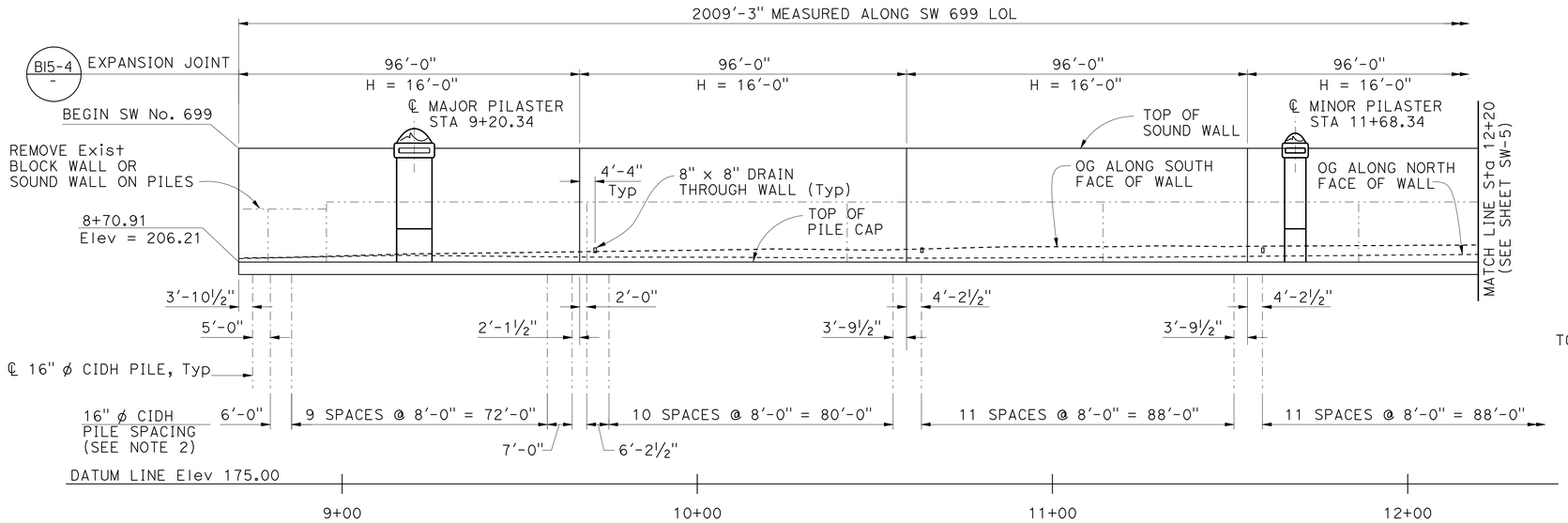

ELEVATION

HORIZ 1" = 20'
VERT 1" = 10'

BEGIN SW 699 LOL 8+70.91 POT=
164.69' Lt "A" 688+70.91 POT
BEGIN REMOVE Exist BLOCK WALL OR SOUND WALL ON PILES
BEGIN TEMPORARY FENCE (TYPE CL-6)

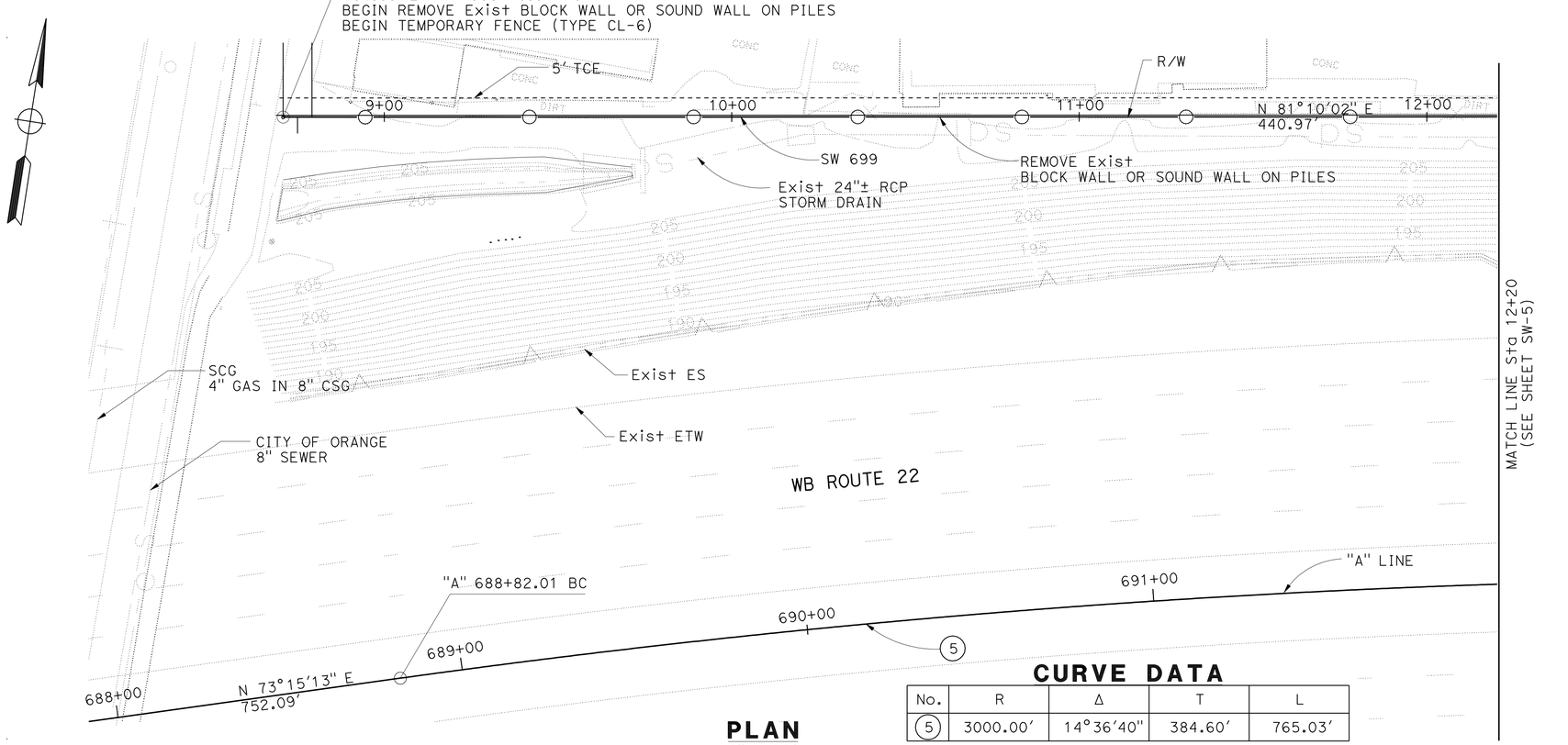

PLAN

1" = 20'

CURVE DATA

No.	R	Δ	T	L
5	3000.00'	14°36'40"	384.60'	765.03'

THIS PLAN ACCURATE FOR SOUNDWALL WORK ONLY.

ABBREVIATION

TCE TEMPORARY CONSTRUCTION EASEMENT

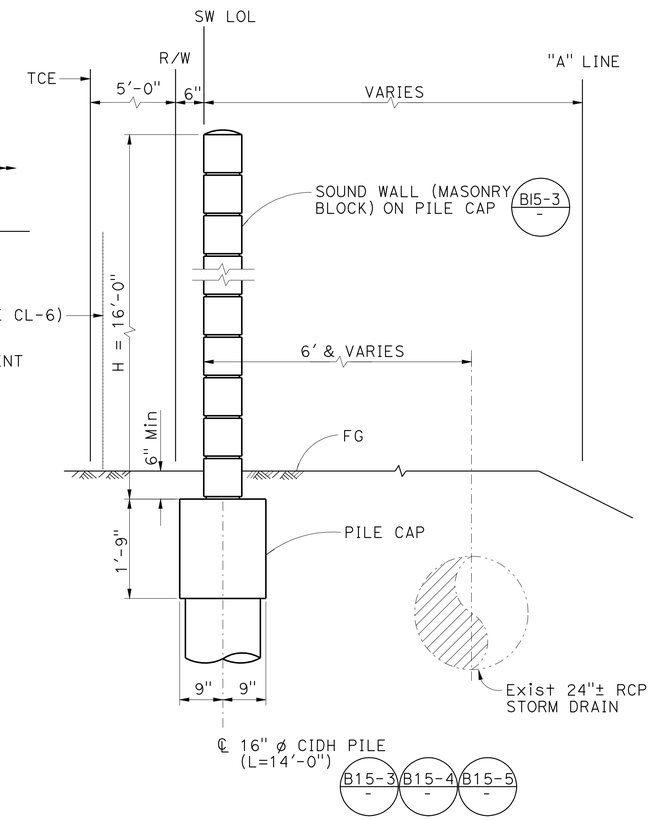

TYPICAL SECTION

¾" = 1'-0"

NOTES THIS SHEET:

1. FOR COMPLETE RIGHT OF WAY AND ACCURATE ACCESS DATA, SEE RIGHT OF WAY RECORD MAPS AT DISTRICT OFFICE.
2. Exist PILE NOT SHOWN FOR CLARITY. NEW SW PILES SHALL BE INSTALLED AT APPROXIMATELY HALF THE DISTANCE BETWEEN THE TWO ADJACENT Exist PILES

SOUND WALL No. 699

SCALE AS SHOWN

SW-4

REVISED BY	DATE REVISED
IK	05-05-09

CALCULATED-DESIGNED BY: ALAEDIN MOUBAYED
CHECKED BY: SAM XIE
CONSULTANT FUNCTIONAL SUPERVISOR: ALAEDIN MOUBAYED

STATE OF CALIFORNIA - DEPARTMENT OF TRANSPORTATION
Caltrans

LAST REVISION 05-05-09
DATE PLOTTED => 03-NOV-2009
TIME PLOTTED => 06:01

Dist	COUNTY	ROUTE	POST MILES TOTAL PROJECT	SHEET No.	TOTAL SHEETS
12	Ora	22	R3.6/R12.7	16	61

REGISTERED CIVIL ENGINEER 05-05-09 DATE

10-26-09
PLANS APPROVAL DATE

REGISTERED PROFESSIONAL ENGINEER ALAEDIN MOUBAYED No. 55268 Exp. 9/30/10 CIVIL STATE OF CALIFORNIA

THE STATE OF CALIFORNIA OR ITS OFFICERS OR AGENTS SHALL NOT BE RESPONSIBLE FOR THE ACCURACY OR COMPLETENESS OF SCANNED COPIES OF THIS PLAN SHEET.

ORANGE COUNTY TRANSPORTATION AUTHORITY
550 SOUTH MAIN STREET
ORANGE, CA 92863

PBS&J
625 THE CITY DRIVE SOUTH, SUITE 200
ORANGE, CA 92868

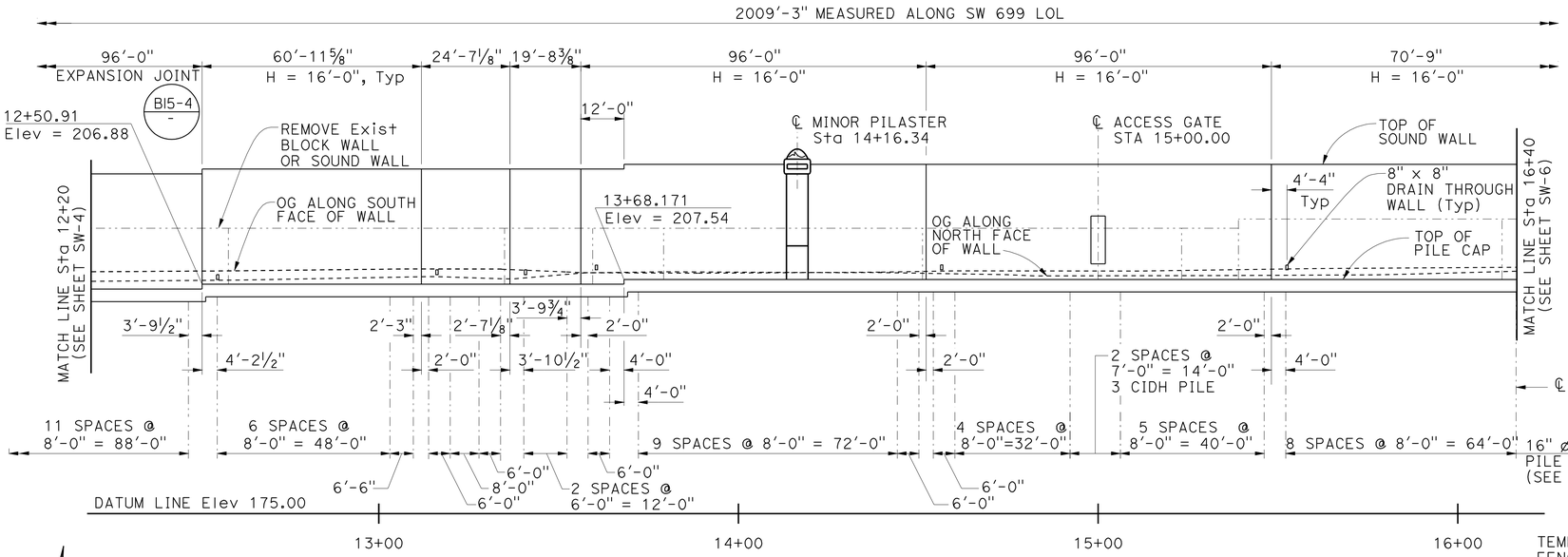

ELEVATION

Horiz 1" = 20'
Vert 1" = 10'

ABBREVIATION

TCE TEMPORARY CONSTRUCTION EASEMENT

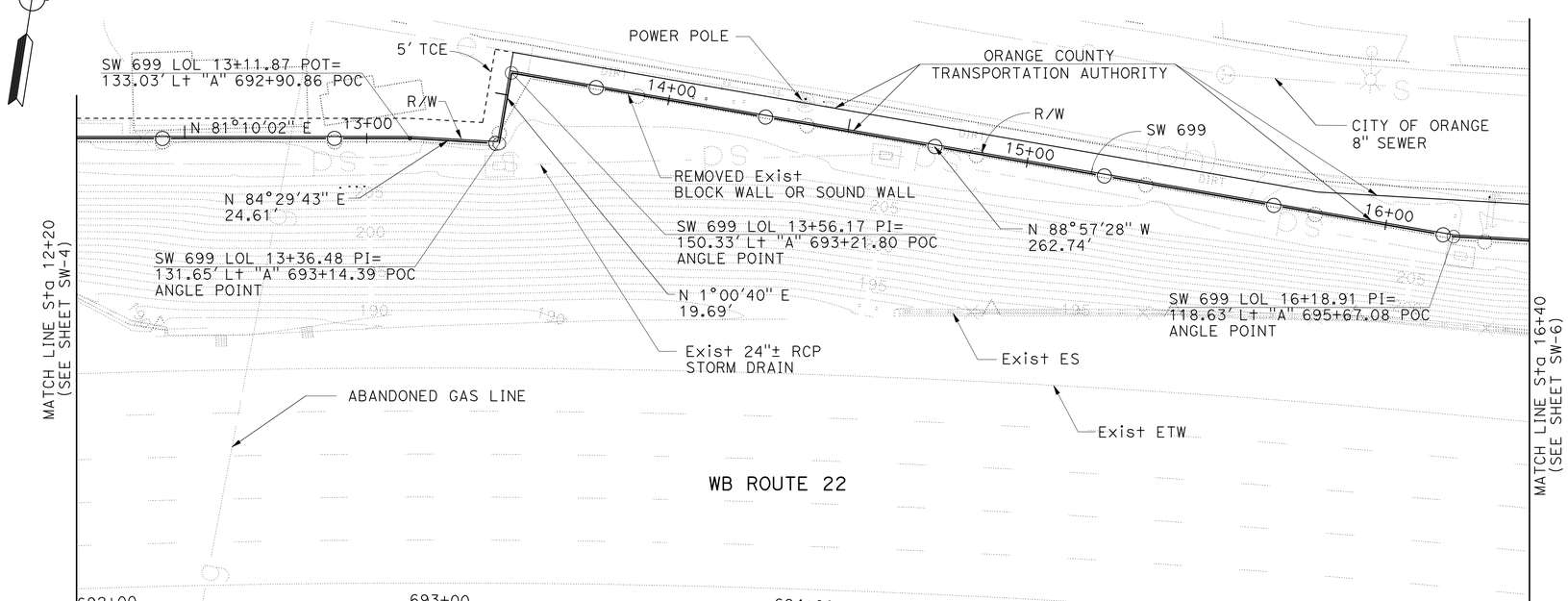

PLAN

1" = 20'

CURVE DATA

No.	R	Δ	T	L
5	3000.00'	14°36'40"	384.60'	765.03'

THIS PLAN ACCURATE FOR SOUNDWALL WORK ONLY.

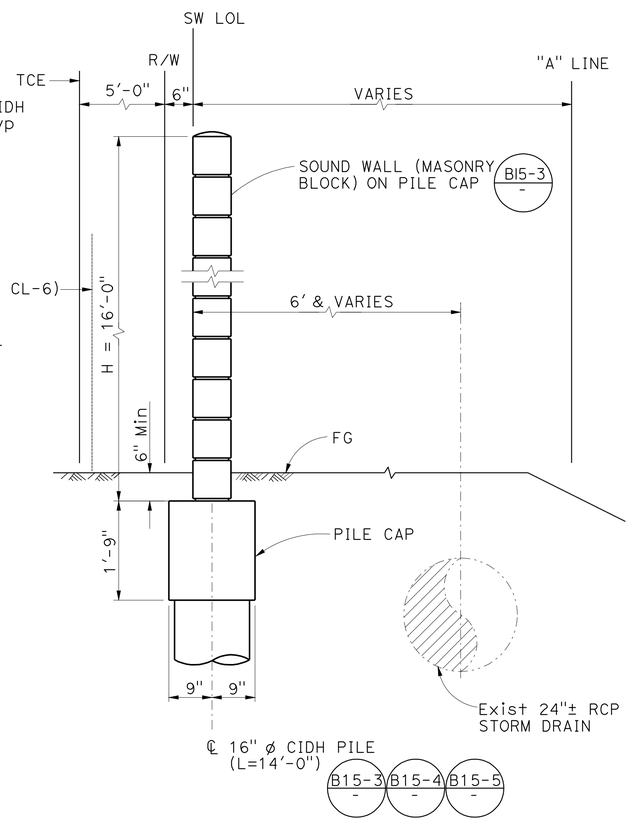

TYPICAL SECTION

¾" = 1'-0"

NOTES THIS SHEET:

1. FOR COMPLETE RIGHT OF WAY AND ACCURATE ACCESS DATA, SEE RIGHT OF WAY RECORD MAPS AT DISTRICT OFFICE.
2. Exist PILE NOT SHOWN FOR CLARITY. NEW SW PILES SHALL BE INSTALLED AT APPROXIMATELY HALF THE DISTANCE BETWEEN THE TWO ADJACENT Exist PILES.

SOUND WALL No. 699

SCALE AS SHOWN

SW-5

REVISED BY IK DATE REVISED 05-05-09
CALCULATED-DESIGNED BY ALAEDIN MOUBAYED CHECKED BY SAM XIE
CONSULTANT FUNCTIONAL SUPERVISOR ALAEDIN MOUBAYED
STATE OF CALIFORNIA - DEPARTMENT OF TRANSPORTATION Caltrans

LAST REVISION 05-05-09 DATE PLOTTED => 03-NOV-2009 TIME PLOTTED => 06:02

Dist	COUNTY	ROUTE	POST MILES TOTAL PROJECT	SHEET No.	TOTAL SHEETS
12	Ora	22	R3.6/R12.7	17	61

REGISTERED CIVIL ENGINEER 05-05-09 DATE

10-26-09
PLANS APPROVAL DATE

REGISTERED PROFESSIONAL ENGINEER ALAEDIN MOUBAYED No. 55268 Exp. 9/30/10 CIVIL STATE OF CALIFORNIA

THE STATE OF CALIFORNIA OR ITS OFFICERS OR AGENTS SHALL NOT BE RESPONSIBLE FOR THE ACCURACY OR COMPLETENESS OF SCANNED COPIES OF THIS PLAN SHEET.

ORANGE COUNTY TRANSPORTATION AUTHORITY
550 SOUTH MAIN STREET
ORANGE, CA 92863

PBS&J
625 THE CITY DRIVE
SOUTH, SUITE 200
ORANGE, CA 92868

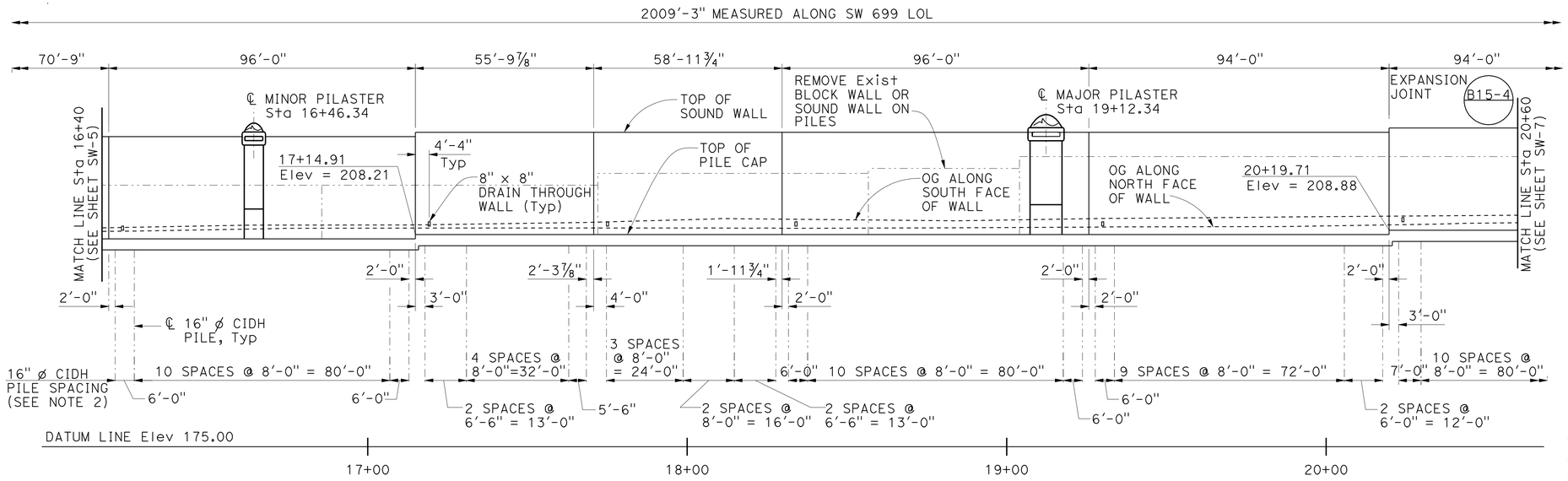

ELEVATION

Horiz 1" = 20'
Vert 1" = 10'

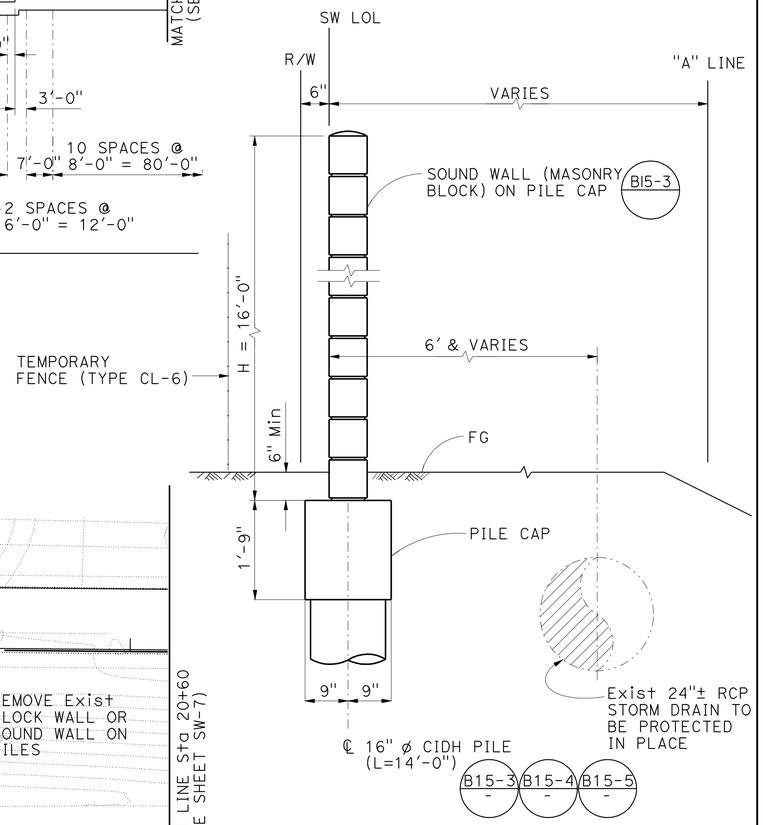

TYPICAL SECTION

¾" = 1'-0"

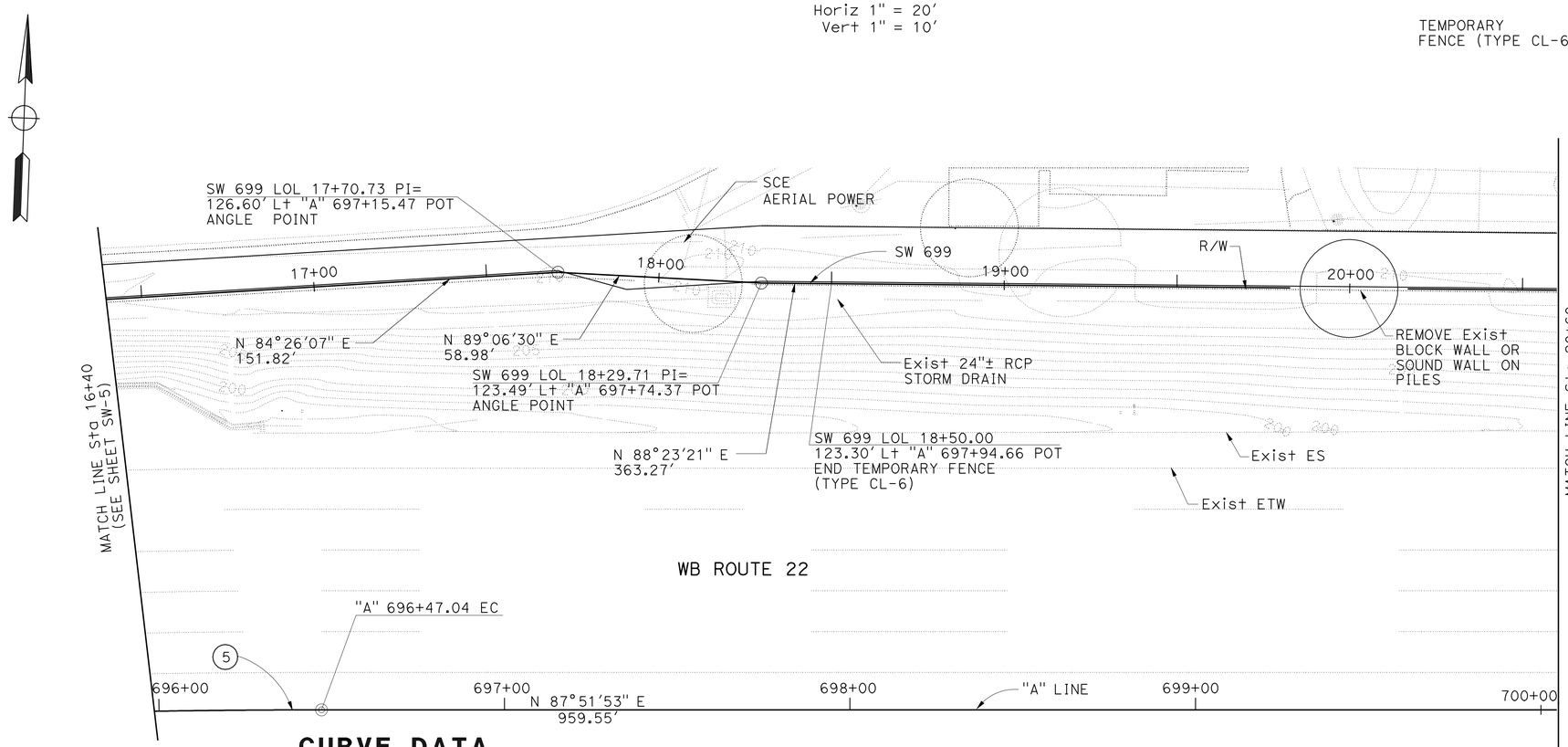

CURVE DATA

No.	R	Δ	T	L
5	3000.00'	14°36'40"	384.60'	765.03'

PLAN

1" = 20'

THIS PLAN ACCURATE FOR SOUNDWALL WORK ONLY.

NOTES THIS SHEET:

1. FOR COMPLETE RIGHT OF WAY AND ACCURATE ACCESS DATA, SEE RIGHT OF WAY RECORD MAPS AT DISTRICT OFFICE.
2. Exist PILE NOT SHOWN FOR CLARITY. NEW SW PILES SHALL BE INSTALLED AT APPROXIMATELY HALF THE DISTANCE BETWEEN THE TWO ADJACENT Exist PILES

SOUND WALL No. 699

SCALE AS SHOWN

SW-6

REVISED BY	DATE REVISED
IK	05-05-09

ALAEDIN MOUBAYED — SAM XIE — CALCULATED-DESIGNED BY — CHECKED BY

CONSULTANT FUNCTIONAL SUPERVISOR — ALAEDIN MOUBAYED

STATE OF CALIFORNIA - DEPARTMENT OF TRANSPORTATION — Caltrans

LAST REVISION 05-05-09 — DATE PLOTTED => 03-NOV-2009 — TIME PLOTTED => 06:02

Dist	COUNTY	ROUTE	POST MILES TOTAL PROJECT	SHEET No.	TOTAL SHEETS
12	Ora	22	R3.6/R12.7	18	61

REGISTERED CIVIL ENGINEER 05-05-09 DATE

10-26-09
PLANS APPROVAL DATE

REGISTERED PROFESSIONAL ENGINEER ALAEDIN MOUBAYED No. 55268 Exp. 9/30/10 CIVIL STATE OF CALIFORNIA

THE STATE OF CALIFORNIA OR ITS OFFICERS OR AGENTS SHALL NOT BE RESPONSIBLE FOR THE ACCURACY OR COMPLETENESS OF SCANNED COPIES OF THIS PLAN SHEET.

ORANGE COUNTY TRANSPORTATION AUTHORITY
550 SOUTH MAIN STREET
ORANGE, CA 92863

PBS&J
625 THE CITY DRIVE SOUTH, SUITE 200
ORANGE, CA 92868

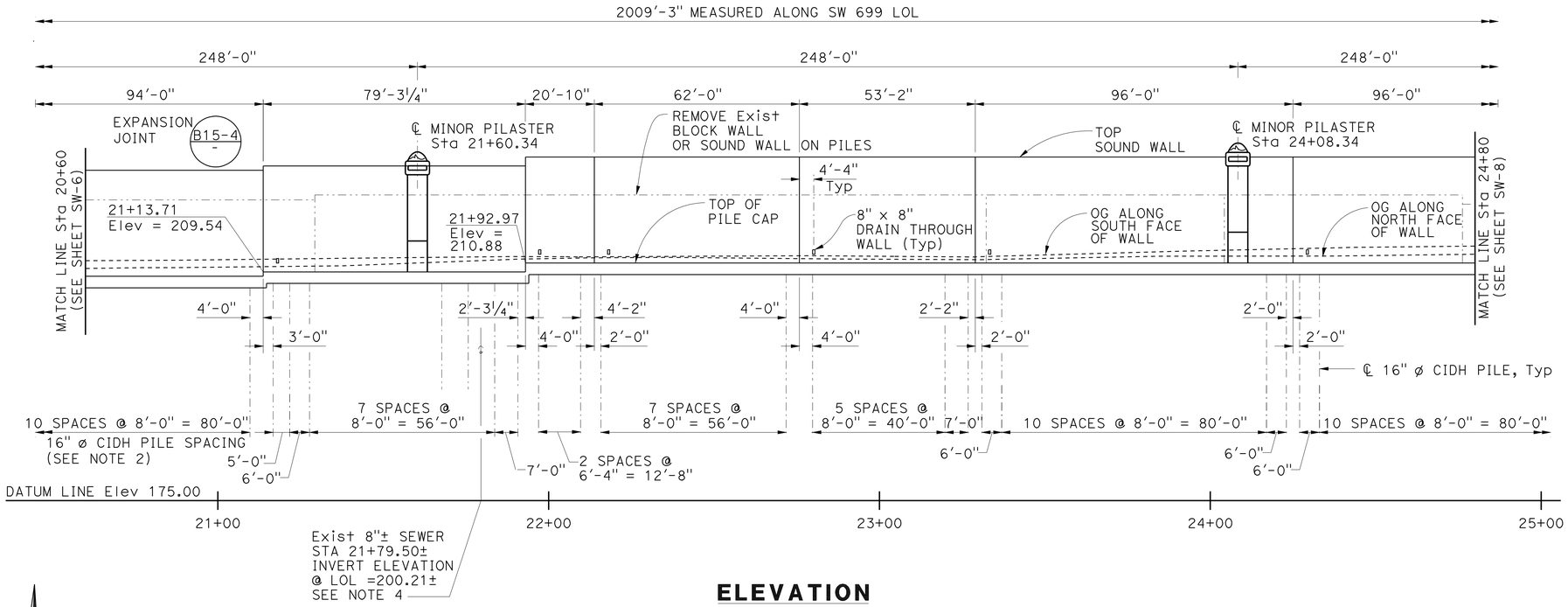

ELEVATION

Horiz 1" = 20'
Vert 1" = 10'

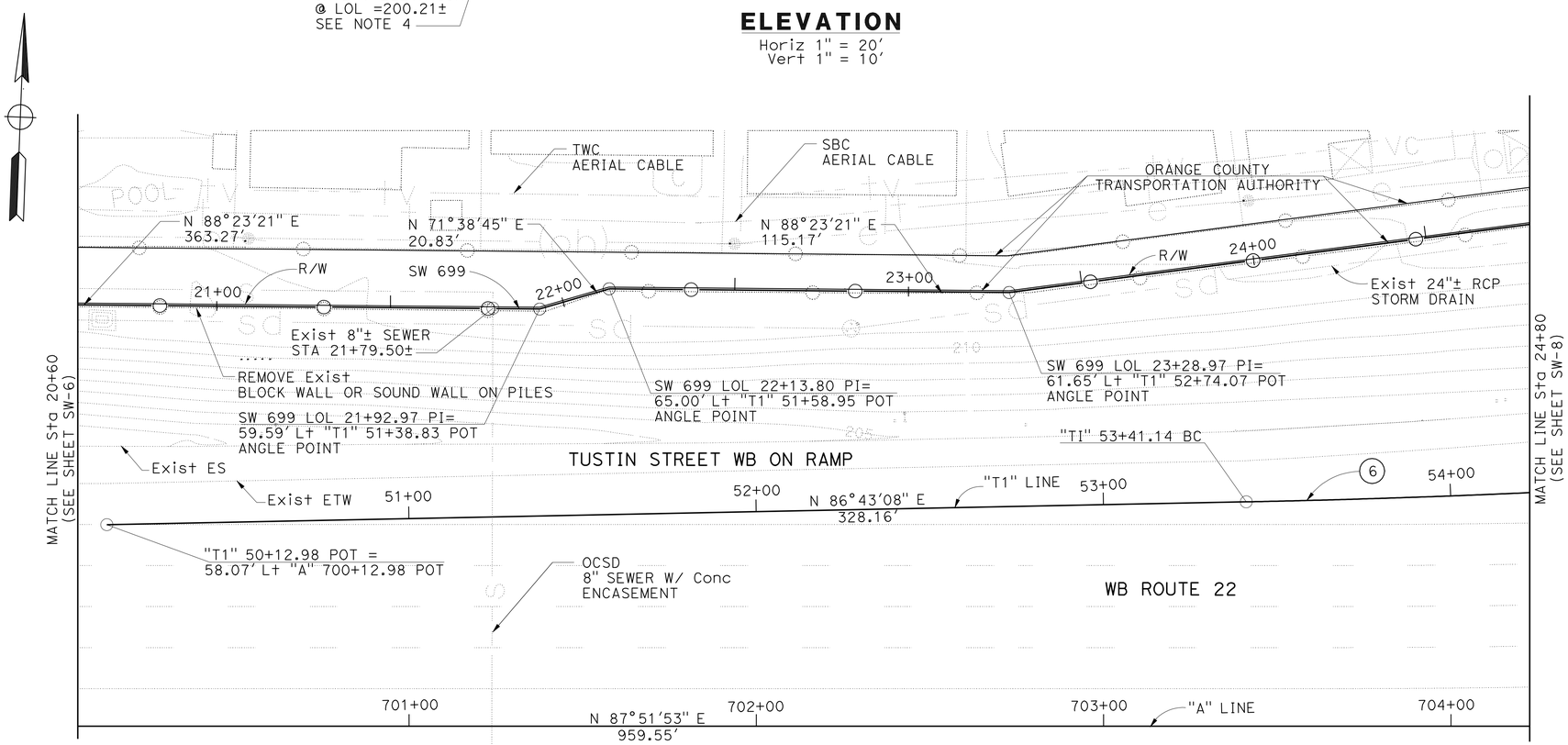

PLAN

1" = 20'

CURVE DATA

No.	R	Δ	T	L
6	3280.83'	2°51'53"	82.03'	164.03'

THIS PLAN ACCURATE FOR SOUNDWALL WORK ONLY.

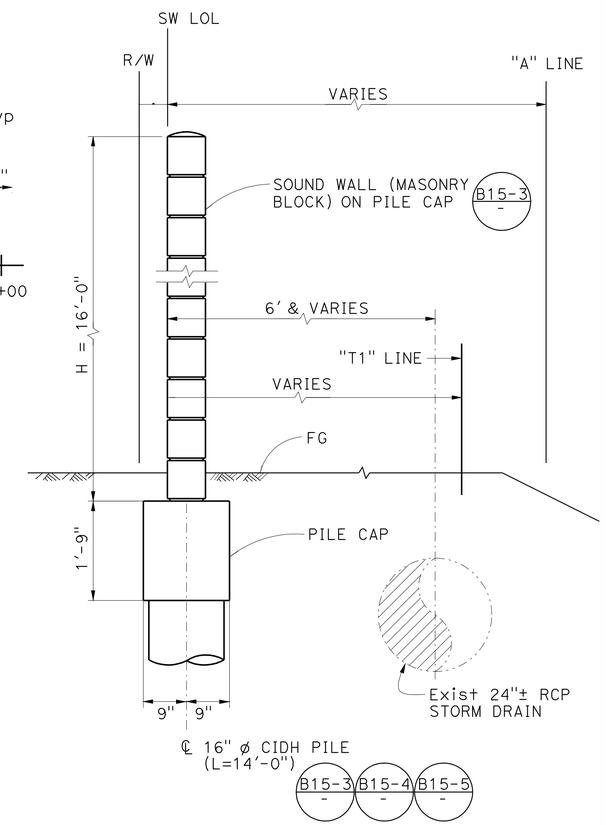

TYPICAL SECTION

¾" = 1'-0"

NOTES THIS SHEET:

1. FOR COMPLETE RIGHT OF WAY AND ACCURATE ACCESS DATA, SEE RIGHT OF WAY RECORD MAPS AT DISTRICT OFFICE.
2. Exist PILE NOT SHOWN FOR CLARITY. NEW SW PILES SHALL BE INSTALLED AT APPROXIMATELY HALF THE DISTANCE BETWEEN THE TWO ADJACENT Exist PILES.

SOUND WALL No. 699

SCALE AS SHOWN

SW-7

STATE OF CALIFORNIA - DEPARTMENT OF TRANSPORTATION
Caltrans

CONSULTANT FUNCTIONAL SUPERVISOR: ALAEDIN MOUBAYED
CALCULATED-DESIGNED BY: ALAEDIN MOUBAYED
CHECKED BY: SAM XIE
REVISED BY: IK
DATE REVISED: 05-05-09

LAST REVISION 05-05-09 DATE PLOTTED => 02-NOV-2009 TIME PLOTTED => 10:43

Dist	COUNTY	ROUTE	POST MILES TOTAL PROJECT	SHEET No.	TOTAL SHEETS
12	Ora	22	R3.6/R12.7	19	61

REGISTERED CIVIL ENGINEER 05-05-09 DATE

10-26-09
PLANS APPROVAL DATE

REGISTERED PROFESSIONAL ENGINEER ALAEDIN MOUBAYED No. 55268 Exp. 9/30/10 CIVIL STATE OF CALIFORNIA

THE STATE OF CALIFORNIA OR ITS OFFICERS OR AGENTS SHALL NOT BE RESPONSIBLE FOR THE ACCURACY OR COMPLETENESS OF SCANNED COPIES OF THIS PLAN SHEET.

ORANGE COUNTY TRANSPORTATION AUTHORITY
550 SOUTH MAIN STREET
ORANGE, CA 92863

PBS&J
625 THE CITY DRIVE SOUTH, SUITE 200
ORANGE, CA 92868

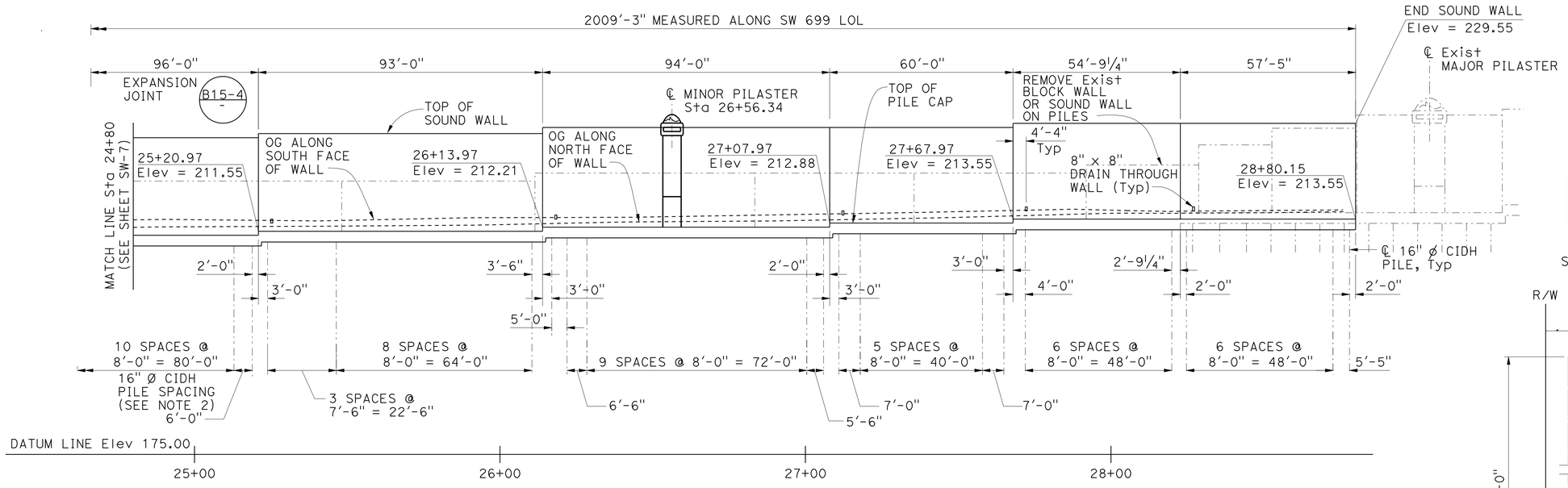

ELEVATION

Horiz 1" = 20'
Vert 1" = 10'

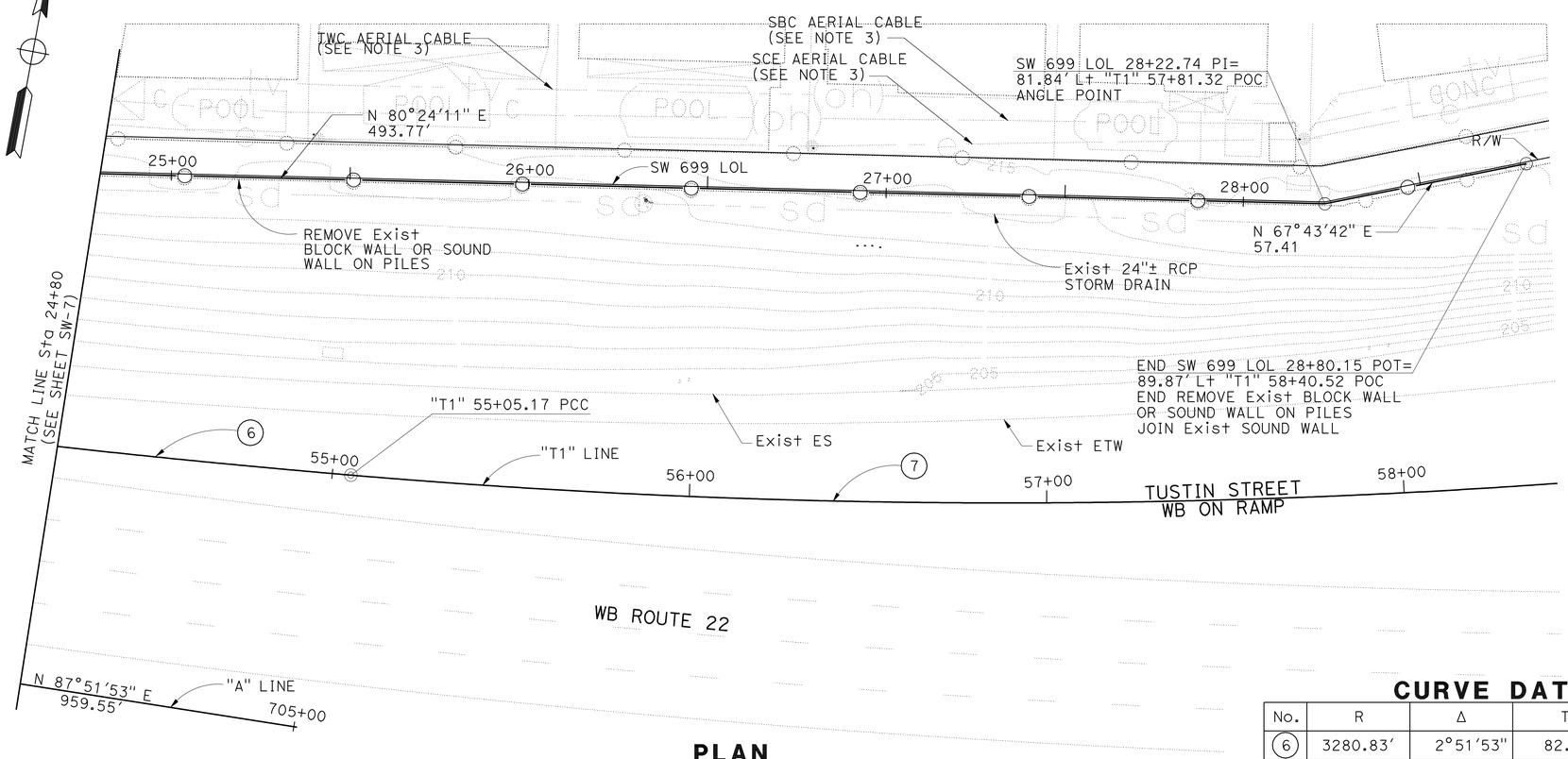

PLAN

1" = 20'

THIS PLAN ACCURATE FOR SOUNDWALL WORK ONLY.

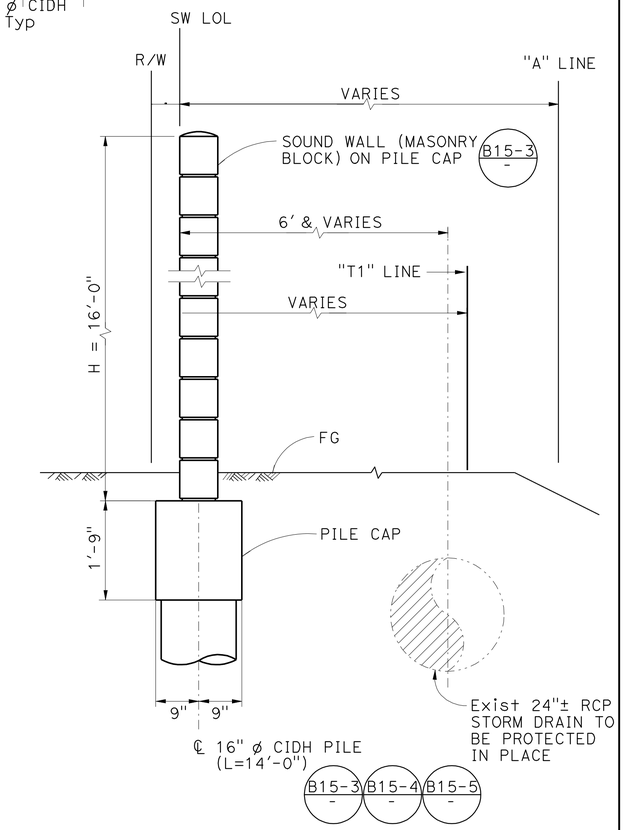

TYPICAL SECTION

¾" = 1'-0"

NOTES THIS SHEET:

1. FOR COMPLETE RIGHT OF WAY AND ACCURATE ACCESS DATA, SEE RIGHT OF WAY RECORD MAPS AT DISTRICT OFFICE.
2. Exist PILE NOT SHOWN FOR CLARITY. NEW SW PILES SHALL BE INSTALLED AT APPROXIMATELY HALF THE DISTANCE BETWEEN THE TWO ADJACENT Exist PILES

CURVE DATA

No.	R	Δ	T	L
6	3280.83'	2°51'53"	82.03'	164.03'
7	2166.63'	11°38'56"	221.01'	440.50'

SOUND WALL No. 699

SCALE AS SHOWN

SW-8

REVISED BY	DATE REVISED
IK	05-05-09

ALAEDIN MOUBAYED — CALCULATED-DESIGNED BY
SAM XIE — CHECKED BY
ALAEDIN MOUBAYED — CONSULTANT FUNCTIONAL SUPERVISOR

STATE OF CALIFORNIA - DEPARTMENT OF TRANSPORTATION
Caltrans

LAST REVISION 05-05-09
DATE PLOTTED => 02-NOV-2009
TIME PLOTTED => 10:44

Dist	COUNTY	ROUTE	POST MILES TOTAL PROJECT	SHEET No.	TOTAL SHEETS
12	Ora	22	R3.6/R12.7	20	61

REGISTERED CIVIL ENGINEER 05-05-09 DATE

10-26-09
PLANS APPROVAL DATE

REGISTERED PROFESSIONAL ENGINEER ALAEDIN MOUBAYED No. 55268 Exp. 9/30/10 CIVIL STATE OF CALIFORNIA

THE STATE OF CALIFORNIA OR ITS OFFICERS OR AGENTS SHALL NOT BE RESPONSIBLE FOR THE ACCURACY OR COMPLETENESS OF SCANNED COPIES OF THIS PLAN SHEET.

ORANGE COUNTY
TRANSPORTATION AUTHORITY
550 SOUTH MAIN STREET
ORANGE, CA 92863

PBS&J
625 THE CITY DRIVE
SOUTH, SUITE 200
ORANGE, CA 92868

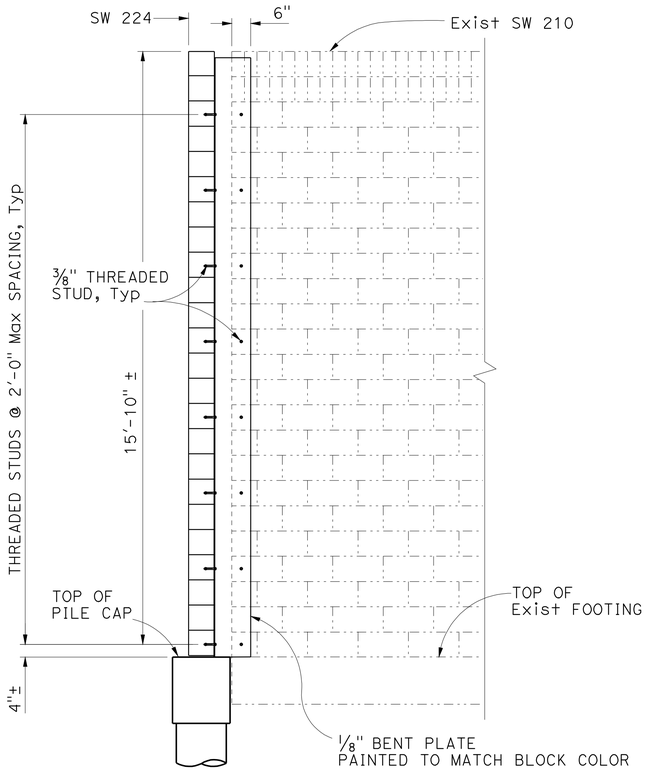

SECTION A-A

1/2" = 1'-0"

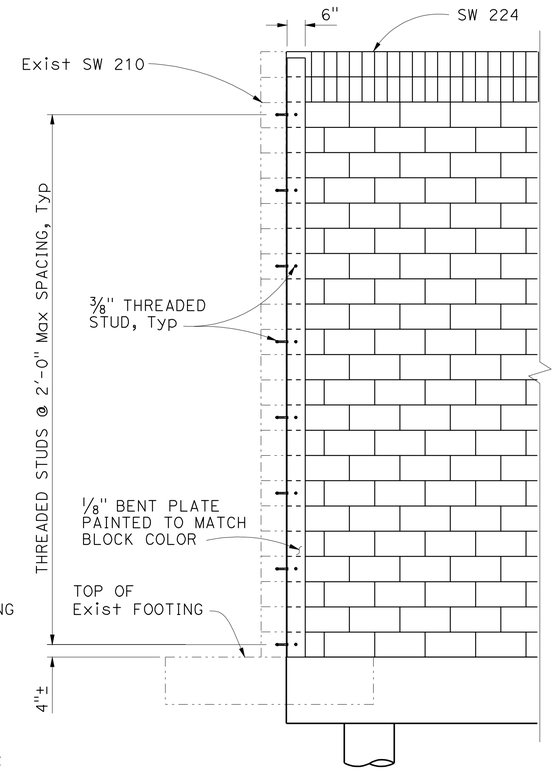

SECTION B-B

1/2" = 1'-0"

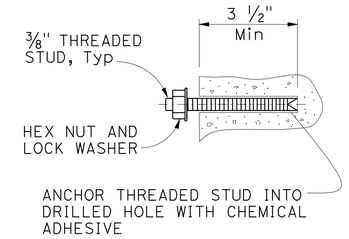

THREADED STUD ANCHORAGE

NO SCALE

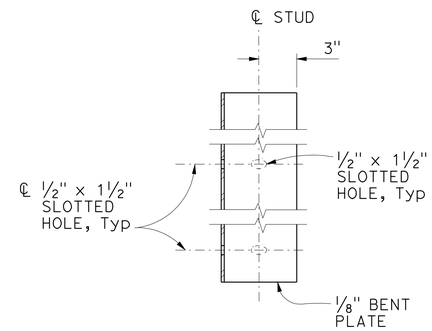

BENT PLATE DETAIL

NO SCALE

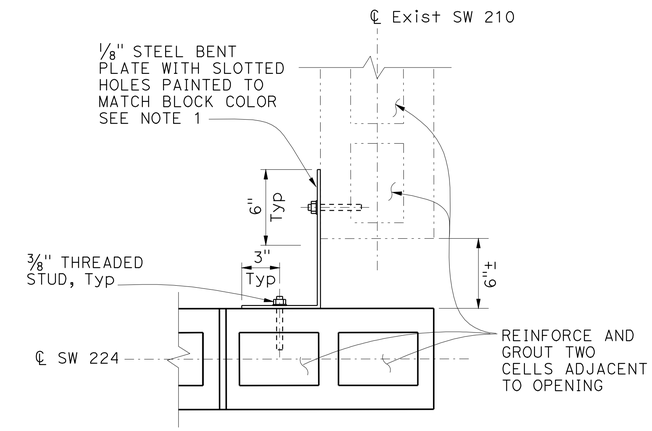

DETAIL 1

NO SCALE

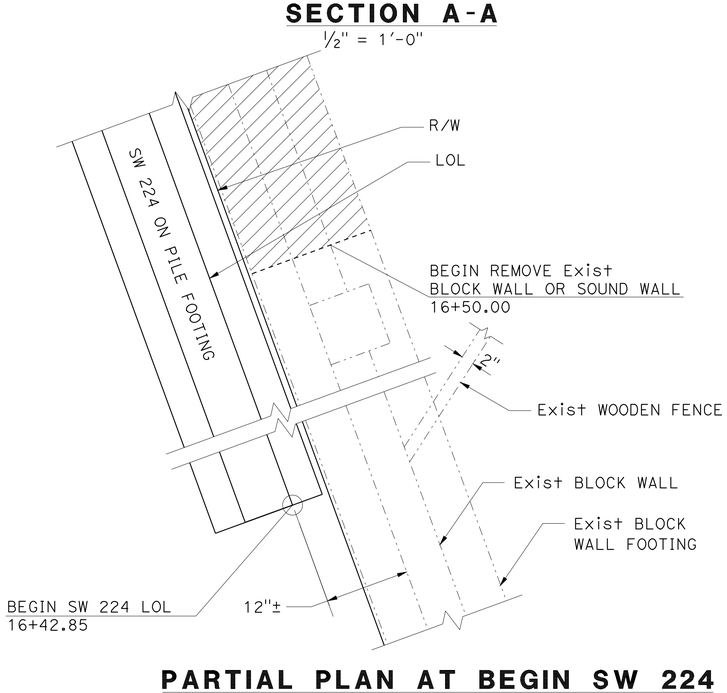

PARTIAL PLAN AT BEGIN SW 224

NO SCALE

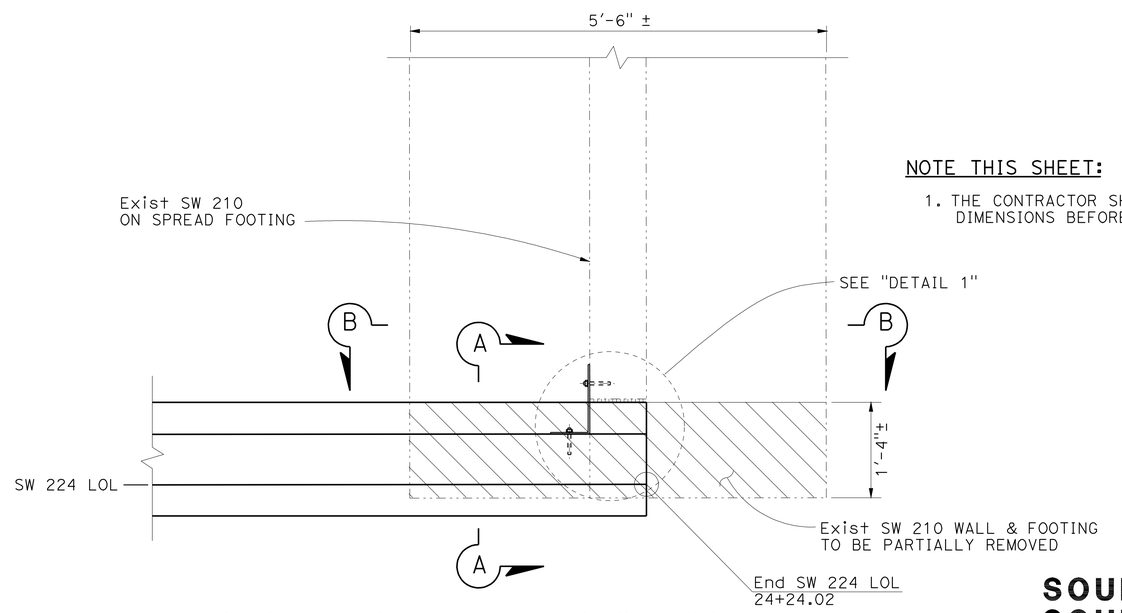

PARTIAL PLAN AT END SW 224

1" = 1'-0"

NOTE THIS SHEET:

1. THE CONTRACTOR SHALL VERIFY ALL CONTROLLING FIELD DIMENSIONS BEFORE ORDERING OR FABRICATING ANY MATERIAL.

SOUND WALL DETAILS
SOUND WALL No. 224

SCALE AS SHOWN

SW-9

STATE OF CALIFORNIA - DEPARTMENT OF TRANSPORTATION
Caltrans

CONSULTANT FUNCTIONAL SUPERVISOR: ALAEDIN MOUBAYED
CALCULATED-DESIGNED BY: ALAEDIN MOUBAYED
CHECKED BY: SAM XIE
REVISED BY: IK
DATE REVISED: 05-05-09

LAST REVISION 05-05-09
DATE PLOTTED => 03-NOV-2009
TIME PLOTTED => 06:03

Dist	COUNTY	ROUTE	POST MILES TOTAL PROJECT	SHEET No.	TOTAL SHEETS
12	Ora	22	R3.6/R12.7	21	61

REGISTERED CIVIL ENGINEER 05-05-09 DATE

10-26-09
PLANS APPROVAL DATE

REGISTERED PROFESSIONAL ENGINEER ALAEDIN MOUBAYED No. 55268 Exp. 9/30/10 CIVIL STATE OF CALIFORNIA

THE STATE OF CALIFORNIA OR ITS OFFICERS OR AGENTS SHALL NOT BE RESPONSIBLE FOR THE ACCURACY OR COMPLETENESS OF SCANNED COPIES OF THIS PLAN SHEET.

ORANGE COUNTY
TRANSPORTATION AUTHORITY
550 SOUTH MAIN STREET
ORANGE, CA 92863

PBS&J
625 THE CITY DRIVE
SOUTH, SUITE 200
ORANGE, CA 92868

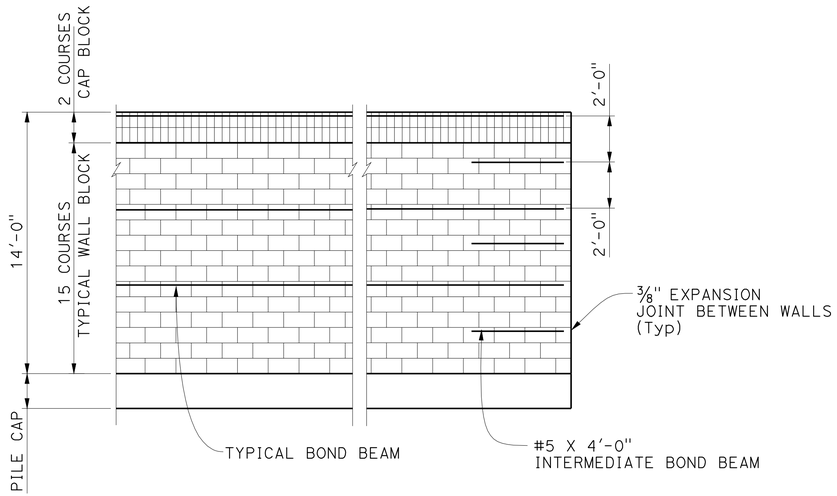

14-FT TYPICAL BLOCK PATTERN **TERMINATION BLOCK PATTERN**

SOUND WALL ON PILE CAP

NO SCALE

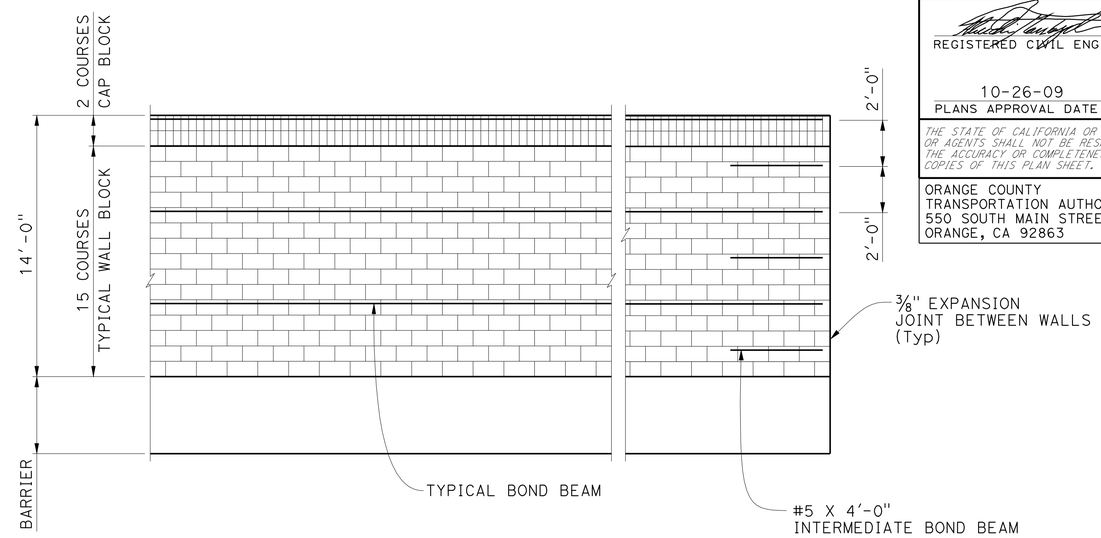

TYPICAL BLOCK PATTERN **TERMINATION BLOCK PATTERN**

SOUND WALL ON BARRIER

NO SCALE

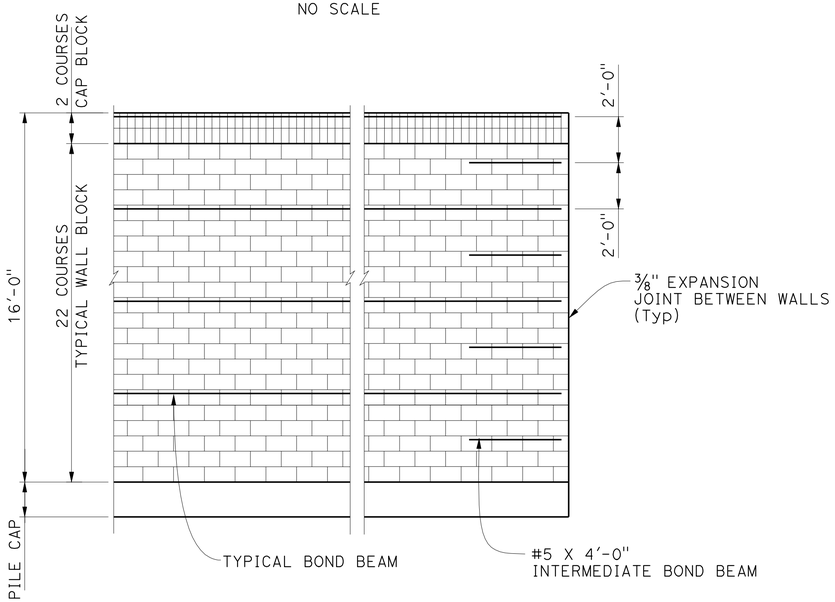

16-FT TYPICAL BLOCK PATTERN **TERMINATION BLOCK PATTERN**

SOUND WALL ON PILE CAP

NO SCALE

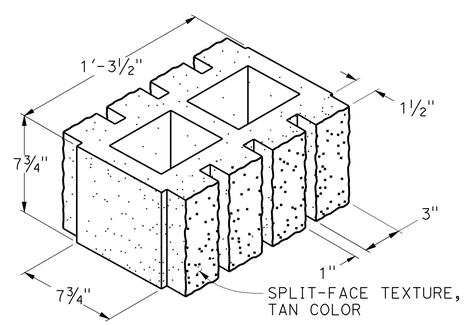

3-SCORE SPLIT FACE CAP BLOCK

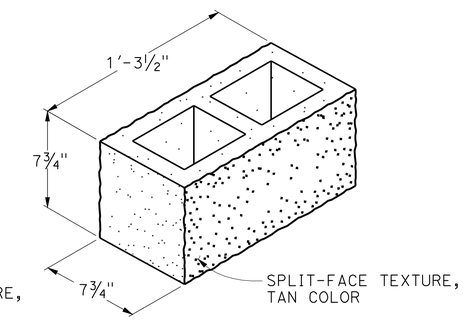

TYPICAL WALL BLOCK

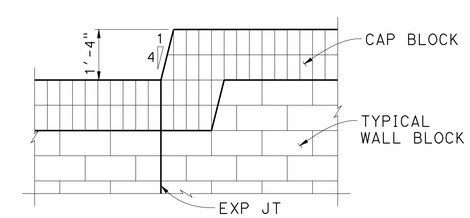

TYPICAL STEP DETAIL

NO SCALE

TYPICAL CONCRETE MASONRY BLOCK DETAILS

NO SCALE

AESTHETIC DETAILS
SOUND WALLS No. 224 & 603

SCALE AS SHOWN

SW-10

REVISED BY	DATE REVISED
IK	05-05-09

ALAEDIN MOUBAYED — CALCULATED-DESIGNED BY
SAM XIE — CHECKED BY
CONSULTANT FUNCTIONAL SUPERVISOR: ALAEDIN MOUBAYED
STATE OF CALIFORNIA - DEPARTMENT OF TRANSPORTATION
Caltrans

LAST REVISION 05-05-09 | DATE PLOTTED => 02-NOV-2009 | TIME PLOTTED => 10:44

Dist	COUNTY	ROUTE	POST MILES TOTAL PROJECT	SHEET No.	TOTAL SHEETS
12	Ora	22	R3.6/R12.7	22	61

REGISTERED CIVIL ENGINEER 05-05-09 DATE

10-26-09
PLANS APPROVAL DATE

REGISTERED PROFESSIONAL ENGINEER ALAEDIN MOUBAYED No. 55268 Exp. 9/30/10 CIVIL STATE OF CALIFORNIA

THE STATE OF CALIFORNIA OR ITS OFFICERS OR AGENTS SHALL NOT BE RESPONSIBLE FOR THE ACCURACY OR COMPLETENESS OF SCANNED COPIES OF THIS PLAN SHEET.

ORANGE COUNTY
TRANSPORTATION AUTHORITY
550 SOUTH MAIN STREET
ORANGE, CA 92863

PBS&J
625 THE CITY DRIVE
SOUTH, SUITE 200
ORANGE, CA 92868

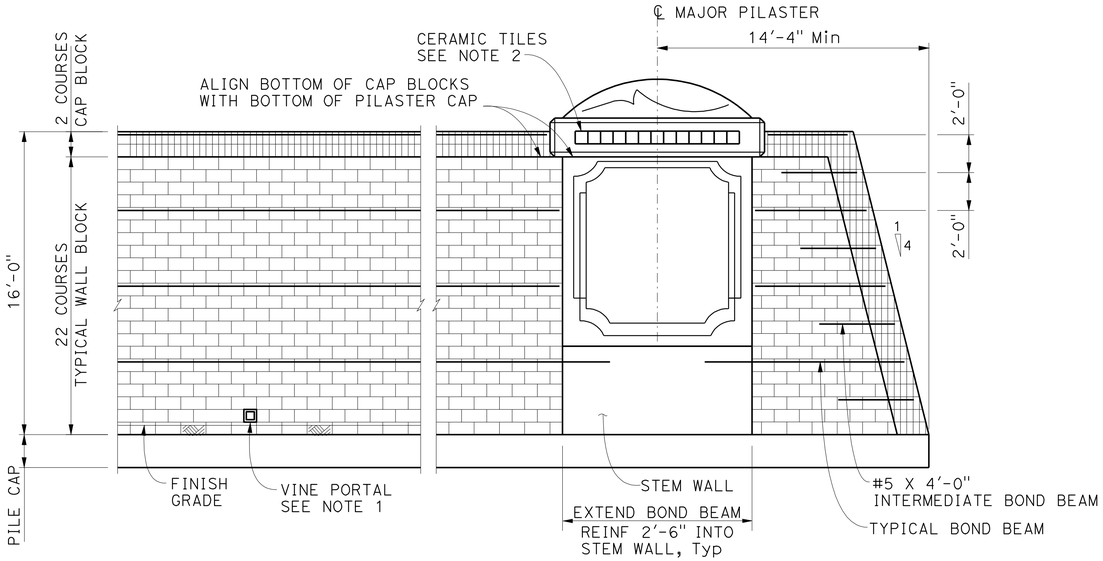

TYPICAL BLOCK PATTERN **TERMINATION BLOCK PATTERN**

SOUND WALL ON PILE CAP

1/4" = 1'-0"

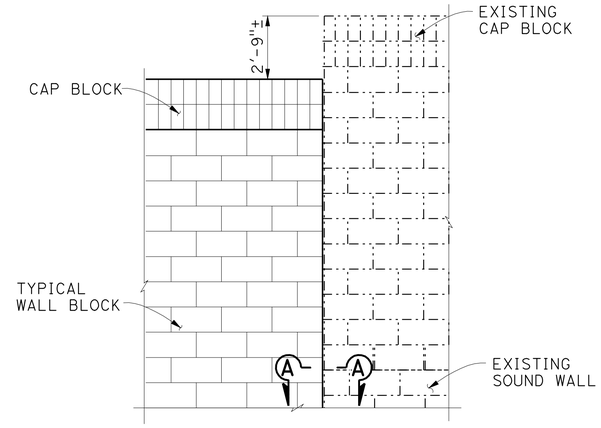

STEP DETAIL AT END SOUND WALL

1/2" = 1'-0"

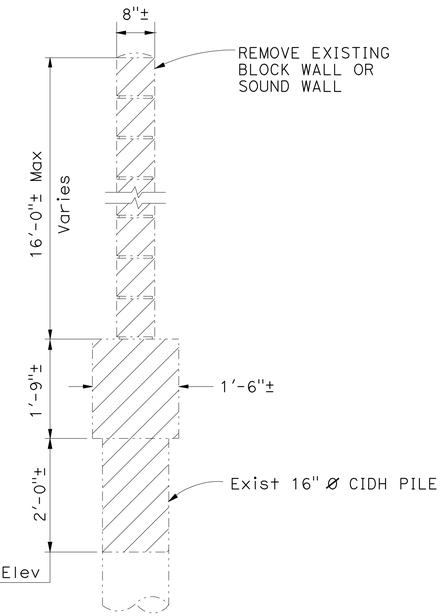

EXIST SW REMOVAL LIMITS

NO SCALE

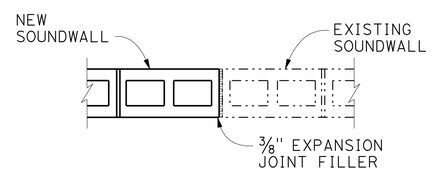

SECTION A-A

1" = 1'-0"

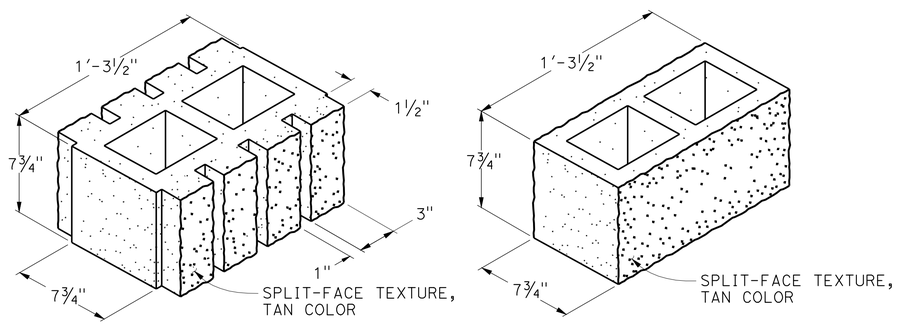

3-SCORE SPLIT FACE CAP BLOCK **TYPICAL WALL BLOCK**

TYPICAL CONCRETE MASONRY BLOCK DETAILS

NO SCALE

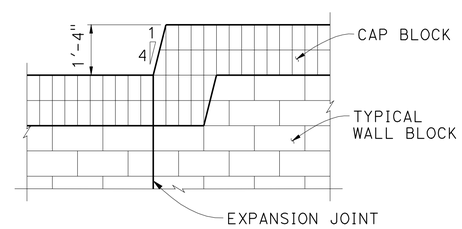

STEP DETAIL

1/2" = 1'-0"

NOTES THIS SHEET:

1. AT VINE PORTAL, PLACE 8" X 8" X 8" BLOCK ON SIDE BETWEEN GROUTED CELL AT FIRST FULL COURSE ABOVE FINISH GRADE.
2. FOR CERAMIC TILES AT MAJOR PILASTER, SEE PROJECT STANDARD PILASTER DETAILS "MAJOR PILASTER ON PILE CAP" SHEET.

AESTHETIC DETAILS
SOUND WALL No. 699

SCALE AS SHOWN

SW-11

REVISED BY	IK
DATE REVISED	05-05-09
CALCULATED-DESIGNED BY	ALAEDIN MOUBAYED
CHECKED BY	SAM XIE
CONSULTANT FUNCTIONAL SUPERVISOR	ALAEDIN MOUBAYED

STATE OF CALIFORNIA - DEPARTMENT OF TRANSPORTATION
Caltrans

LAST REVISION 05-05-09 DATE PLOTTED => 02-NOV-2009 TIME PLOTTED => 10:44

Dist	COUNTY	ROUTE	POST MILES TOTAL PROJECT	SHEET No.	TOTAL SHEETS
12	Ora	22	R3.6/R12.7	23	61

REGISTERED CIVIL ENGINEER 05-05-09 DATE

10-26-09
PLANS APPROVAL DATE

REGISTERED PROFESSIONAL ENGINEER ALAEDIN MOUBAYED No. 55268 Exp. 9/30/10 CIVIL STATE OF CALIFORNIA

THE STATE OF CALIFORNIA OR ITS OFFICERS OR AGENTS SHALL NOT BE RESPONSIBLE FOR THE ACCURACY OR COMPLETENESS OF SCANNED COPIES OF THIS PLAN SHEET.

ORANGE COUNTY
TRANSPORTATION AUTHORITY
550 SOUTH MAIN STREET
ORANGE, CA 92863

PBS&J
625 THE CITY DRIVE
SOUTH, SUITE 200
ORANGE, CA 92868

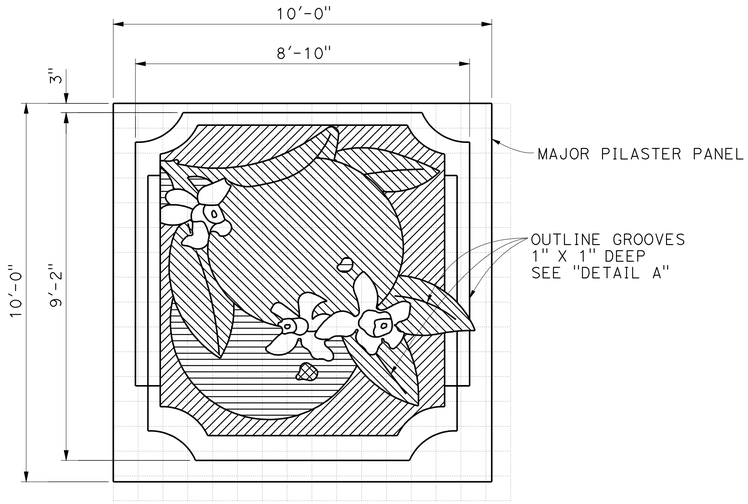

FORMED RELIEF - FREEWAY SIDE

½"=1'-0"
GRID = 8"X8"

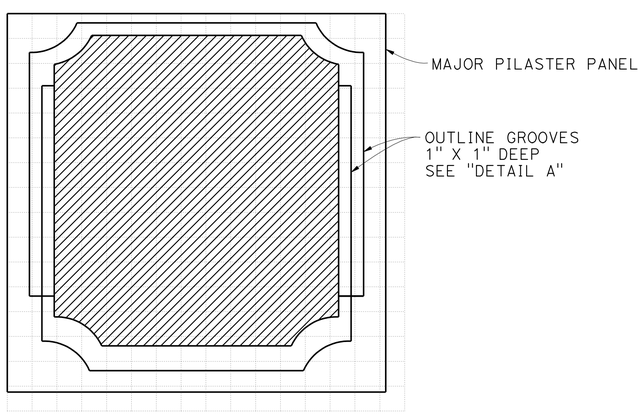

FORMED RELIEF - COMMUNITY SIDE

½"=1'-0"
GRID = 8"X8"

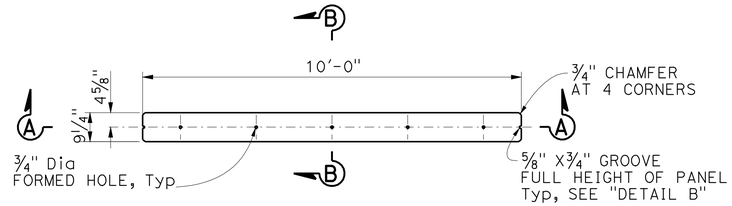

MAJOR PANEL PLAN

½" = 1'-0"

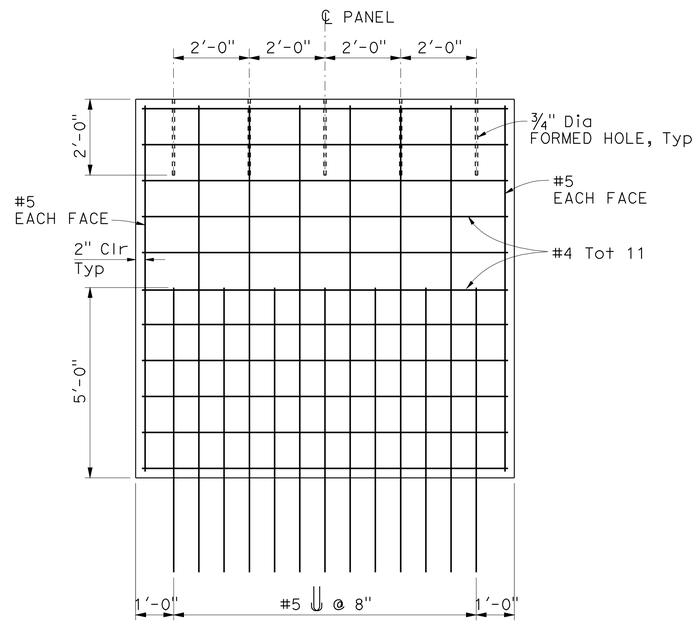

SECTION A-A

½" = 1'-0"

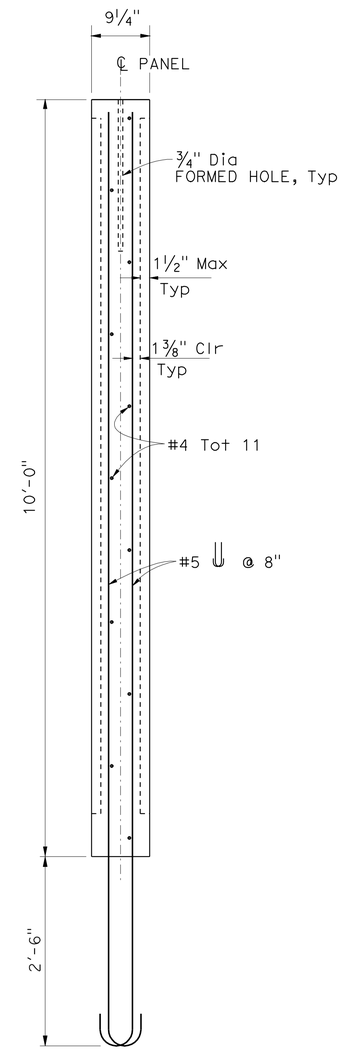

SECTION B-B

¾" = 1'-0"

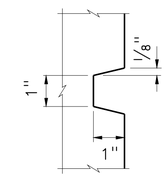

DETAIL A

NO SCALE

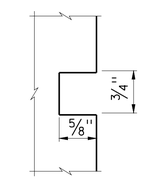

DETAIL B

NO SCALE

LEGEND:

- FLUSH WITH PANEL SURFACE
- RECESS ½"
- RECESS 1"
- RECESS 1⅛"
- RECESS 1½" AND DARKEN.

NOTE THIS SHEET:

1. REINFORCED CONCRETE:
   FY = 60 ksi
   F'C = 3.6 ksi

MAJOR PILASTER DETAILS No. 1
SOUND WALL No. 699

SCALE AS SHOWN

SW-12

REVISED BY	IK	05-05-09
DATE REVISED		
CALCULATED-DESIGNED BY	ALAEDIN MOUBAYED	
CHECKED BY	SAM XIE	
CONSULTANT FUNCTIONAL SUPERVISOR	ALAEDIN MOUBAYED	

STATE OF CALIFORNIA - DEPARTMENT OF TRANSPORTATION
Caltrans

LAST REVISION 05-05-09 DATE PLOTTED => 02-NOV-2009 TIME PLOTTED => 10:45

Dist	COUNTY	ROUTE	POST MILES TOTAL PROJECT	SHEET No.	TOTAL SHEETS
12	Ora	22	R3.6/R12.7	24	61

REGISTERED CIVIL ENGINEER 05-05-09 DATE

10-26-09
PLANS APPROVAL DATE

REGISTERED PROFESSIONAL ENGINEER
ALAEDIN MOUBAYED
No. 55268
Exp. 9/30/10
CIVIL
STATE OF CALIFORNIA

THE STATE OF CALIFORNIA OR ITS OFFICERS OR AGENTS SHALL NOT BE RESPONSIBLE FOR THE ACCURACY OR COMPLETENESS OF SCANNED COPIES OF THIS PLAN SHEET.

ORANGE COUNTY
TRANSPORTATION AUTHORITY
550 SOUTH MAIN STREET
ORANGE, CA 92863

PBS&J
625 THE CITY DRIVE
SOUTH, SUITE 200
ORANGE, CA 92868

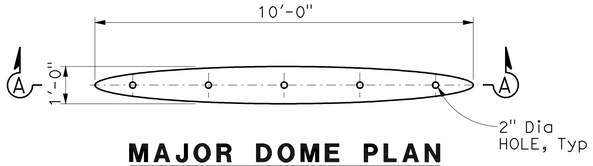

MAJOR DOME PLAN

½" = 1'-0"

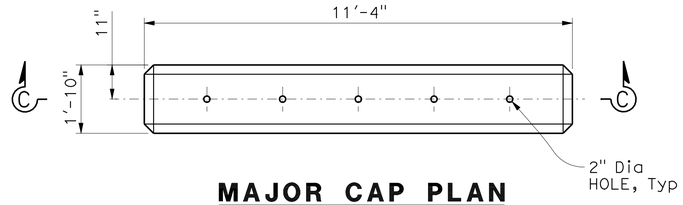

MAJOR CAP PLAN

½" = 1'-0"

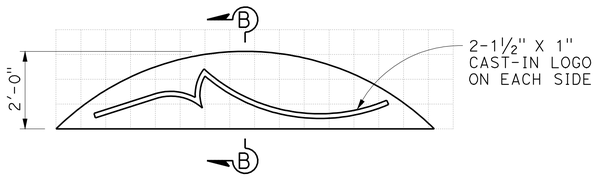

MAJOR DOME ELEVATION

½"=1'-0"
GRID = 8"X8"

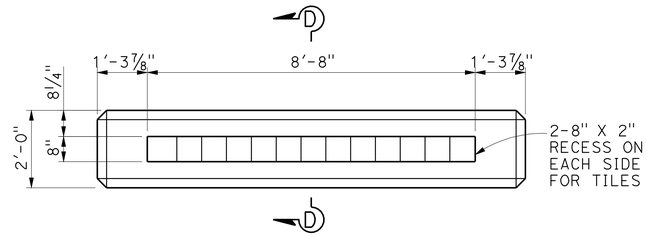

MAJOR CAP ELEVATION

½" = 1'-0"

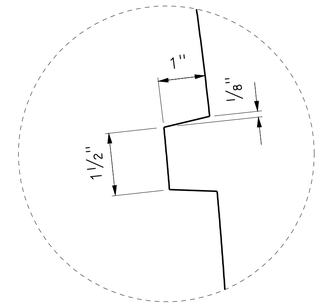

DETAIL A

NO SCALE

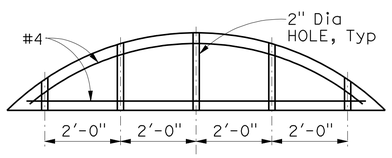

SECTION A-A

½" = 1'-0"

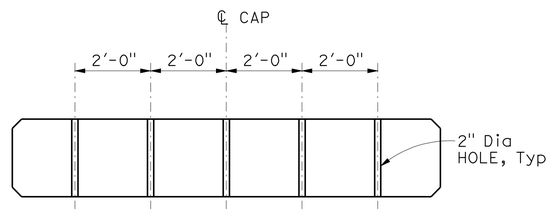

SECTION C-C

½" = 1'-0"

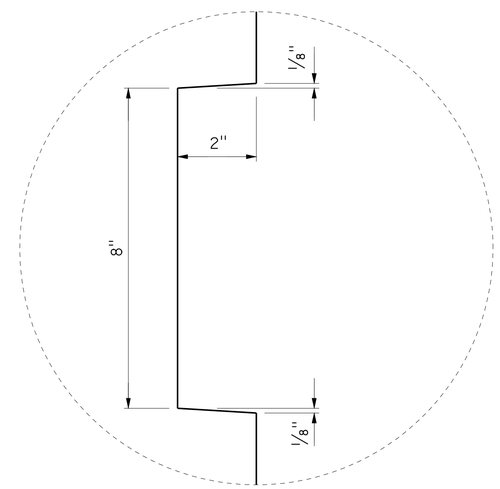

DETAIL B

NO SCALE

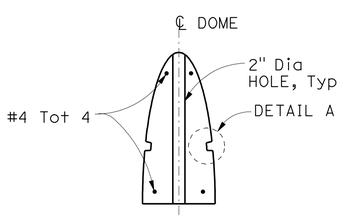

SECTION B-B

1" = 1'-0"

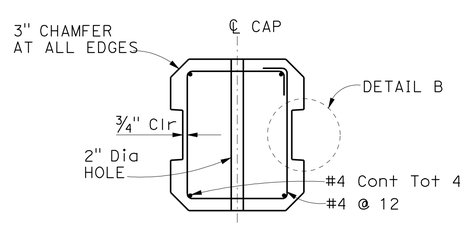

SECTION D-D

1" = 1'-0"

MAJOR PILASTER DETAILS No. 2
SOUND WALL NO. 699

SCALE AS SHOWN

SW-13

STATE OF CALIFORNIA - DEPARTMENT OF TRANSPORTATION
Caltrans

CONSULTANT FUNCTIONAL SUPERVISOR: ALAEDIN MOUBAYED
CALCULATED-DESIGNED BY: ALAEDIN MOUBAYED
CHECKED BY: SAM XIE
REVISED BY: IK
DATE REVISED: 05-05-09

LAST REVISION 05-05-09
DATE PLOTTED => 02-NOV-2009
TIME PLOTTED => 10:45

Dist	COUNTY	ROUTE	POST MILES TOTAL PROJECT	SHEET No.	TOTAL SHEETS
12	Ora	22	R3.6/R12.7	25	61

REGISTERED CIVIL ENGINEER 05-05-09 DATE

10-26-09
PLANS APPROVAL DATE

REGISTERED PROFESSIONAL ENGINEER ALAEDIN MOUBAYED No. 55268 Exp. 9/30/10 CIVIL STATE OF CALIFORNIA

THE STATE OF CALIFORNIA OR ITS OFFICERS OR AGENTS SHALL NOT BE RESPONSIBLE FOR THE ACCURACY OR COMPLETENESS OF SCANNED COPIES OF THIS PLAN SHEET.

ORANGE COUNTY
TRANSPORTATION AUTHORITY
550 SOUTH MAIN STREET
ORANGE, CA 92863

PBS&J
625 THE CITY DRIVE
SOUTH, SUITE 200
ORANGE, CA 92868

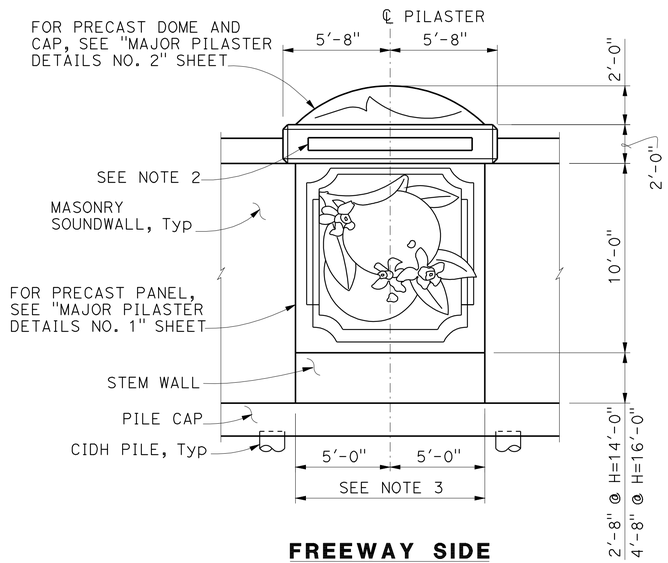

FREEWAY SIDE

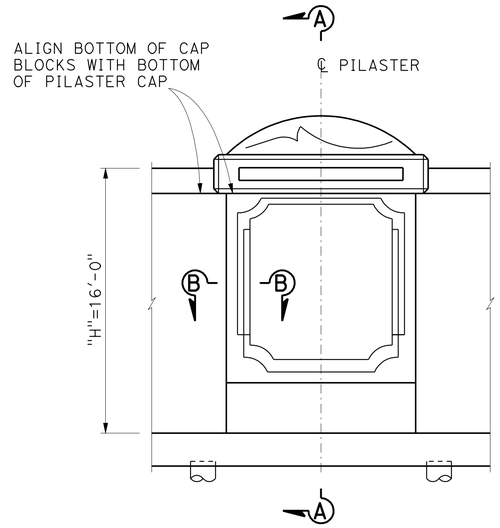

COMMUNITY SIDE

MAJOR PILASTER ON PILE CAP

1/4" = 1'-0"

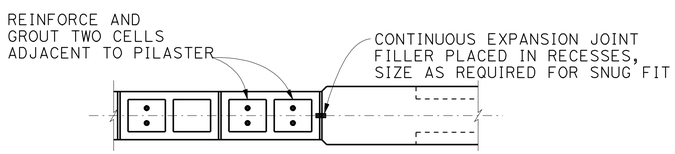

SECTION B-B

1" = 1'-0"

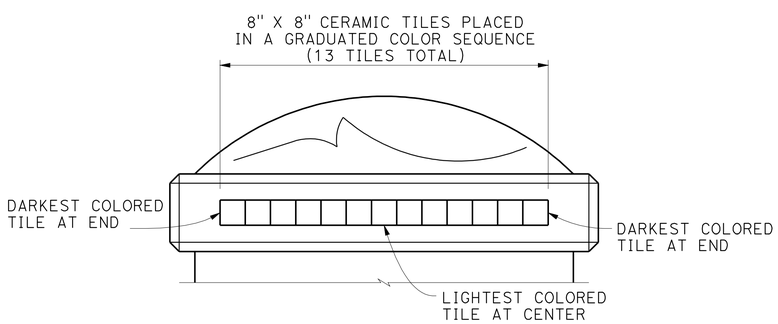

CERAMIC TILES AT MAJOR PILASTERS

1/2" = 1'-0"

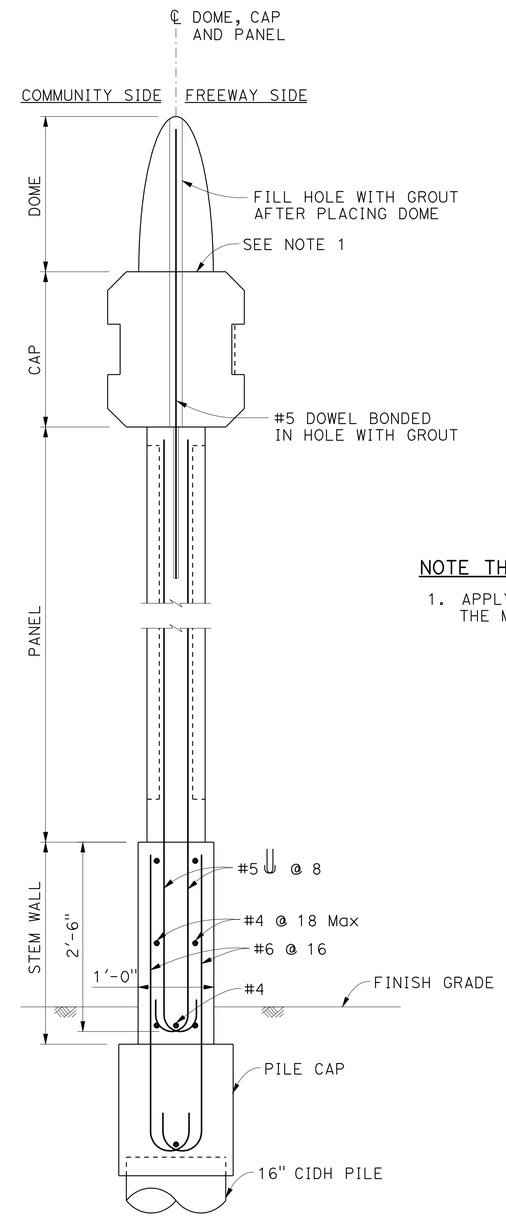

SECTION A-A

1" = 1'-0"

NOTE THIS SHEET:

1. APPLY A BED OF EPOXY THAT FILLS ALL GAPS BETWEEN THE MATING SURFACES.

MAJOR PILASTER ON PILE CAP
SOUND WALL No. 699

SCALE AS SHOWN

SW-14

ALAEDIN MOUBAYED	IK		
SAM XIE	05-05-09		
CALCULATED-DESIGNED BY	REVISED BY		
CHECKED BY	DATE REVISED		
ALAEDIN MOUBAYED			
CONSULTANT FUNCTIONAL SUPERVISOR			
STATE OF CALIFORNIA - DEPARTMENT OF TRANSPORTATION			
Caltrans			

LAST REVISION 05-05-09 | DATE PLOTTED => 02-NOV-2009 | TIME PLOTTED => 10:45

Dist	COUNTY	ROUTE	POST MILES TOTAL PROJECT	SHEET No.	TOTAL SHEETS
12	Ora	22	R3.6/R12.7	26	61

REGISTERED CIVIL ENGINEER 05-05-09 DATE

10-26-09
PLANS APPROVAL DATE

REGISTERED PROFESSIONAL ENGINEER ALAEDIN MOUBAYED No. 55268 Exp. 9/30/10 CIVIL STATE OF CALIFORNIA

THE STATE OF CALIFORNIA OR ITS OFFICERS OR AGENTS SHALL NOT BE RESPONSIBLE FOR THE ACCURACY OR COMPLETENESS OF SCANNED COPIES OF THIS PLAN SHEET.

ORANGE COUNTY
TRANSPORTATION AUTHORITY
550 SOUTH MAIN STREET
ORANGE, CA 92863

PBS&J
625 THE CITY DRIVE
SOUTH, SUITE 200
ORANGE, CA 92868

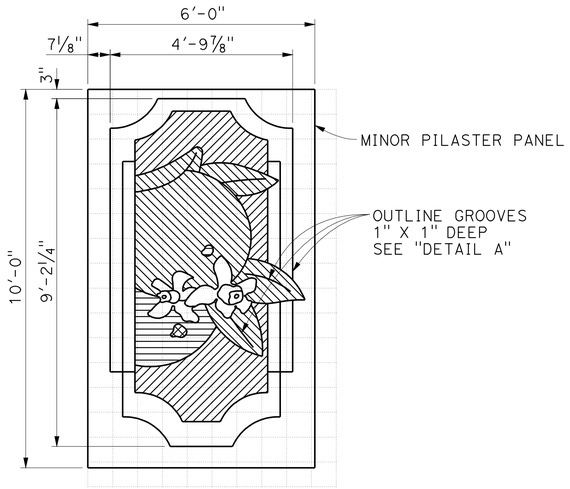

FORMED RELIEF - FREEWAY SIDE

1/2"=1'-0"
GRID = 8"X8"

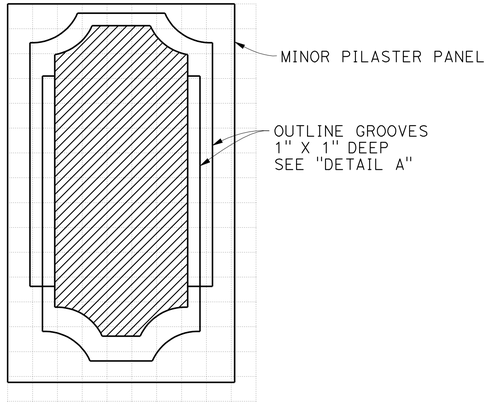

FORMED RELIEF - COMMUNITY SIDE

1/2"=1'-0"
GRID = 8"X8"

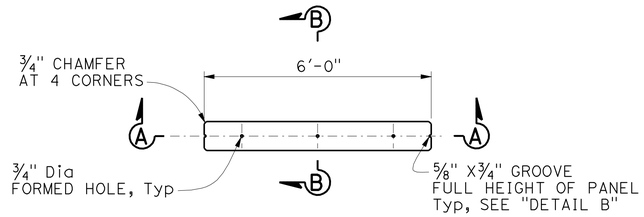

MINOR PANEL PLAN

1/2"=1'-0"

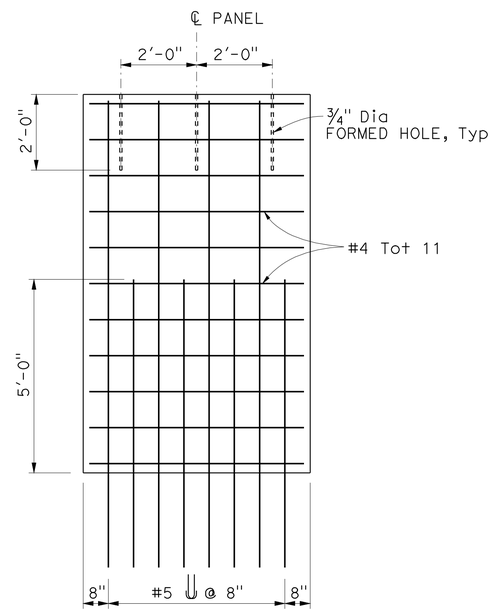

SECTION A-A

1/2"=1'-0"

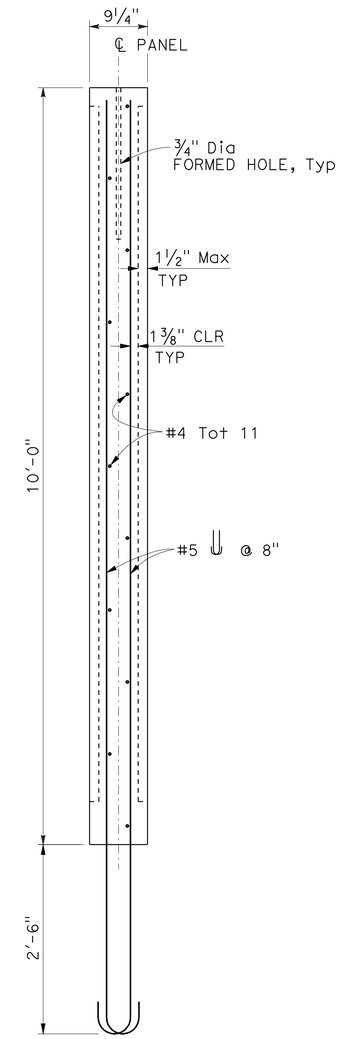

SECTION B-B

1/2"=1'-0"

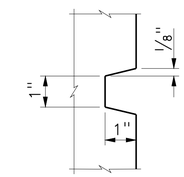

DETAIL A

NO SCALE

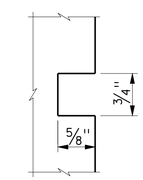

DETAIL B

NO SCALE

LEGEND

- FLUSH WITH PANEL SURFACE
- RECESS 1/2"
- RECESS 1"
- RECESS 1 1/8"
- RECESS 1 1/2" AND DARKEN.

NOTE THIS SHEET:

1. REINFORCED CONCRETE:
   FY = 60 ksi
   F'C = 3.6 ksi

MINOR PILASTER DETAILS No. 1
SOUND WALL No. 699

SCALE AS SHOWN

SW-15

STATE OF CALIFORNIA - DEPARTMENT OF TRANSPORTATION	CONSULTANT FUNCTIONAL SUPERVISOR	REVISED BY	DATE REVISED
Caltrans	ALAEDIN MOUBAYED	IK	05-05-09
	CALCULATED-DESIGNED BY	ALAEDIN MOUBAYED	
	CHECKED BY	SAM XIE	

LAST REVISION 05-05-09 | DATE PLOTTED => 02-NOV-2009 TIME PLOTTED => 10:45

Dist	COUNTY	ROUTE	POST MILES TOTAL PROJECT	SHEET No.	TOTAL SHEETS
12	Ora	22	R3.6/R12.7	27	61

REGISTERED CIVIL ENGINEER 05-05-09 DATE

10-26-09
PLANS APPROVAL DATE

REGISTERED PROFESSIONAL ENGINEER ALAEDIN MOUBAYED No. 55268 Exp. 9/30/10 CIVIL STATE OF CALIFORNIA

THE STATE OF CALIFORNIA OR ITS OFFICERS OR AGENTS SHALL NOT BE RESPONSIBLE FOR THE ACCURACY OR COMPLETENESS OF SCANNED COPIES OF THIS PLAN SHEET.

ORANGE COUNTY
TRANSPORTATION AUTHORITY
550 SOUTH MAIN STREET
ORANGE, CA 92863

PBS&J
625 THE CITY DRIVE
SOUTH, SUITE 200
ORANGE, CA 92868

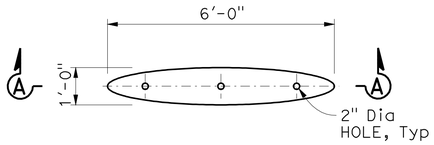

MINOR DOME PLAN
½" = 1'-0"

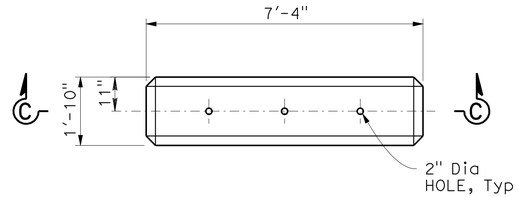

MINOR CAP PLAN
½" = 1'-0"

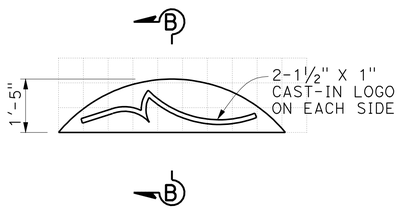

MINOR DOME ELEVATION
½"=1'-0"
GRID = 8"X8"

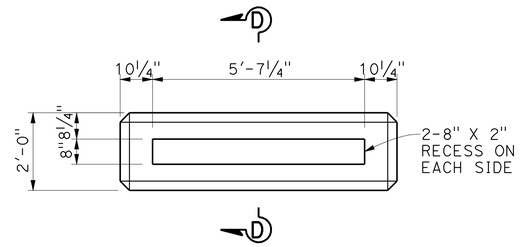

MINOR CAP ELEVATION
½" = 1'-0"

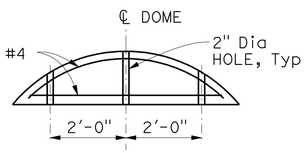

SECTION A-A
½" = 1'-0"

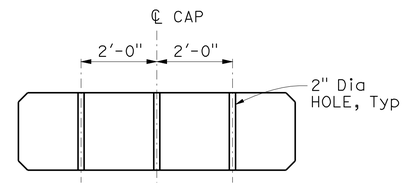

SECTION C-C
½" = 1'-0"

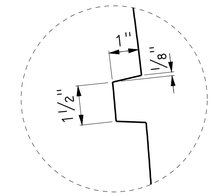

DETAIL A
NO SCALE

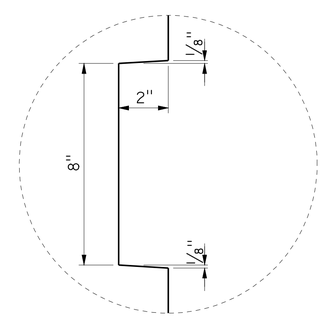

DETAIL B
NO SCALE

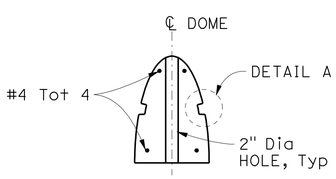

SECTION B-B
1 " = 1'-0"

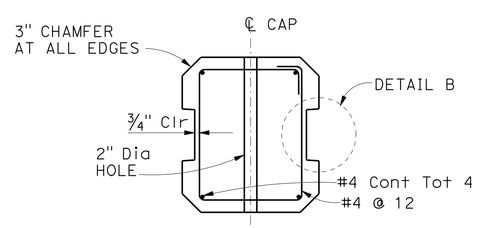

SECTION D-D
1 " = 1'-0"

MINOR PILASTER DETAILS No. 2
SOUND WALL No. 699

SCALE AS SHOWN

SW-16

STATE OF CALIFORNIA - DEPARTMENT OF TRANSPORTATION
Caltrans

CONSULTANT FUNCTIONAL SUPERVISOR: ALAEDIN MOUBAYED
CALCULATED-DESIGNED BY: ALAEDIN MOUBAYED
CHECKED BY: SAM XIE
REVISED BY: IK
DATE REVISED: 05-05-09

LAST REVISION 05-05-09 | DATE PLOTTED => 02-NOV-2009 | TIME PLOTTED => 10:45

Dist	COUNTY	ROUTE	POST MILES TOTAL PROJECT	SHEET No.	TOTAL SHEETS
12	Ora	22	R3.6/R12.7	28	61

REGISTERED CIVIL ENGINEER 05-05-09 DATE

10-26-09
PLANS APPROVAL DATE

REGISTERED PROFESSIONAL ENGINEER ALAEDIN MOUBAYED No. 55268 Exp. 9/30/10 CIVIL STATE OF CALIFORNIA

THE STATE OF CALIFORNIA OR ITS OFFICERS OR AGENTS SHALL NOT BE RESPONSIBLE FOR THE ACCURACY OR COMPLETENESS OF SCANNED COPIES OF THIS PLAN SHEET.

ORANGE COUNTY
TRANSPORTATION AUTHORITY
550 SOUTH MAIN STREET
ORANGE, CA 92863

PBS&J
625 THE CITY DRIVE
SOUTH, SUITE 200
ORANGE, CA 92868

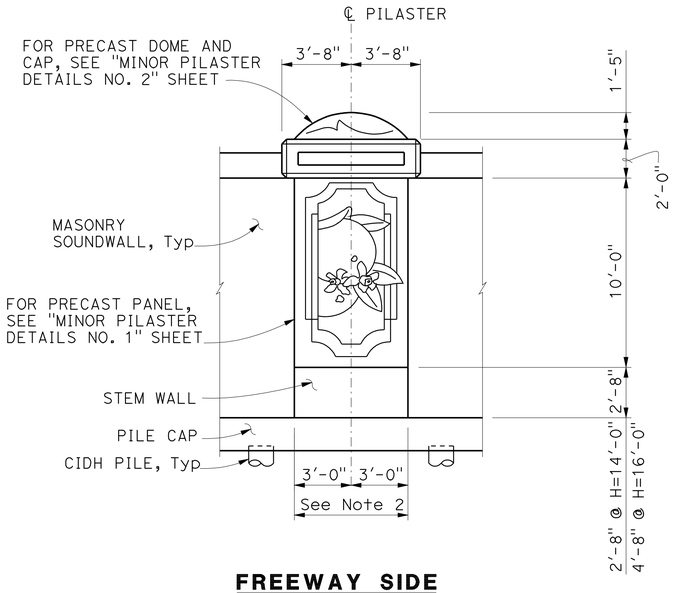

FREEWAY SIDE

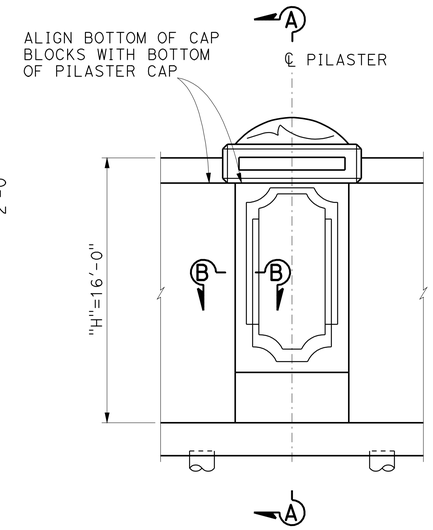

COMMUNITY SIDE

MINOR PILASTER ON PILE CAP

1/4" = 1'-0"

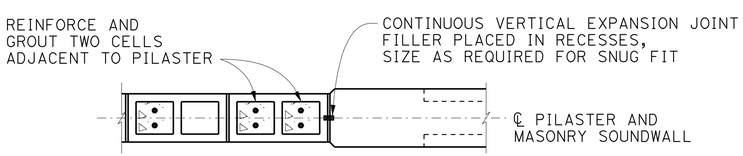

SECTION B-B

1" = 1'-0"

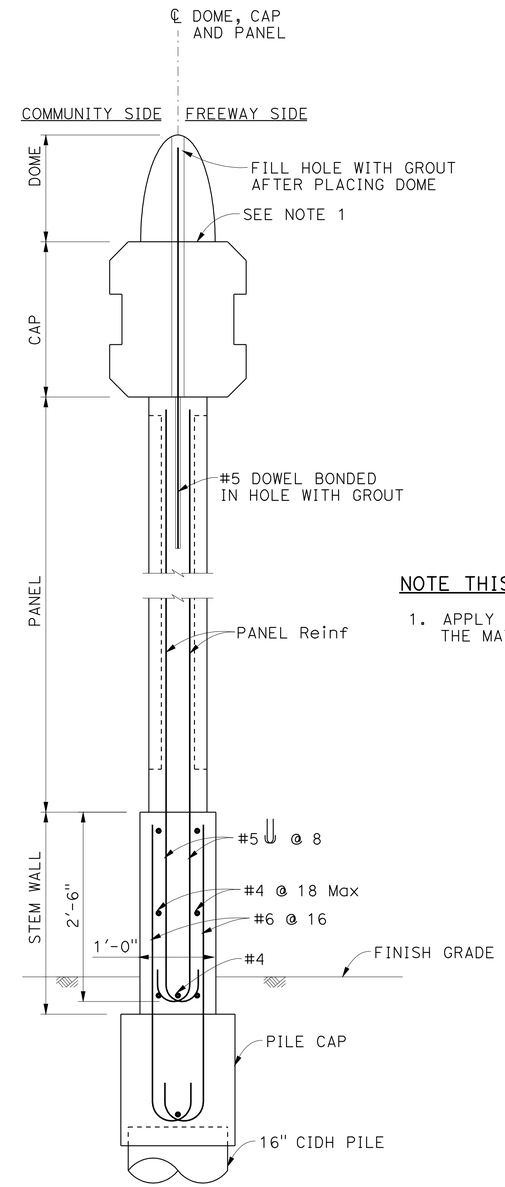

SECTION A-A

1" = 1'-0"

NOTE THIS SHEET:

1. APPLY A BED OF EPOXY THAT FILLS ALL GAPS BETWEEN THE MATING SURFACES.

MINOR PILASTER ON PILE CAP
SOUND WALL No. 699

SCALE AS SHOWN

SW-17

REVISED BY	DATE REVISED
IK	05-05-09

ALAEDIN MOUBAYED — SAM XIE — CALCULATED-DESIGNED BY — CHECKED BY

CONSULTANT FUNCTIONAL SUPERVISOR: ALAEDIN MOUBAYED

STATE OF CALIFORNIA - DEPARTMENT OF TRANSPORTATION

Caltrans

LAST REVISION 05-05-09 — DATE PLOTTED => 02-NOV-2009 — TIME PLOTTED => 10:46

Dist	COUNTY	ROUTE	POST MILES TOTAL PROJECT	SHEET No.	TOTAL SHEETS
12	Ora	22	R3.6/R12.7	29	61

REGISTERED CIVIL ENGINEER 05-05-09 DATE

10-26-09
PLANS APPROVAL DATE

REGISTERED PROFESSIONAL ENGINEER ALAEDIN MOUBAYED No. 55268 Exp. 9/30/10 CIVIL STATE OF CALIFORNIA

THE STATE OF CALIFORNIA OR ITS OFFICERS OR AGENTS SHALL NOT BE RESPONSIBLE FOR THE ACCURACY OR COMPLETENESS OF SCANNED COPIES OF THIS PLAN SHEET.

ORANGE COUNTY
TRANSPORTATION AUTHORITY
550 SOUTH MAIN STREET
ORANGE, CA 92863

PBS&J
625 THE CITY DRIVE
SOUTH, SUITE 200
ORANGE, CA 92868

SOUNDWALL QUANTITIES

SOUND WALL NUMBER	SOUND WALL STATION	SOUND WALL (MASONRY BLOCK)	CONCRETE BARRIER (TYPE 736 SV)	16" CAST-IN DRILLED-HOLE CONCRETE PILE (SOUND WALL)	MINOR CONCRETE (SOUND WALL)	REMOVE Exist BLOCK WALL OR SOUND WALL
		SQFT	LF	LF	CY	SQFT
224	16+42.85 TO 24+24.02	12500	-	695	76	4700
603	10+00.00 TO 10+47.41	650	12	71	4	100
699	8+70.91 TO 28+80.15	32150	-	3766	195	20100
TOTAL		45300	12	4532	275	24400

PRECAST CONCRETE PILASTERS

SOUND WALL NUMBER	MAJOR PANEL (120" x 120" x 9¼")	MAJOR DOME CAP (136" x 24" x 22")	MAJOR DOME (120" x 24" x 12")	MINOR PANEL (120" x 24" x 12")	MINOR DOME (88" x 24" x 22")	MINOR DOME CAP (72" x 17" x 12")
	EA	EA	EA	EA	EA	EA
699	2	2	2	6	6	6

NOTE: MINOR PILASTERS STA (11+68.34, 14+16.34, 16+46.34 21+60.34, 24+08.34, 26+56.34).
MAJOR PILASTERS STA (9+20.34, 19+12.34).

ACCESS GATES (N)

SOUND WALL NUMBER	SOUND WALL STATION	REFERENCE STATION	NUMBER OF ACCESS GATE
			EA
603	10+00.00 TO 10+47.41	10+11.88	1
699	8+70.91 TO 28+80.15	15+00.00	1

(N) NOT A SEPARATE PAY ITEM. FOR INFORMATION ONLY.

TEMPORARY FENCE (TYPE CL-6)

SOUND WALL NUMBER	SOUND WALL STATION	REFERENCE STATION	TOTAL LENGTH
			LF
224	16+42.85 TO 24+24.02	"BCH3" 116+42.85 TO 126+22.08	781
699	8+70.91 TO 18+50.00	"A" 688+70.91 TO 697+94.66	979
TOTAL			1760

SOUND WALL QUANTITIES

SW-18

REVISED BY IK DATE REVISED 05-05-09
ALAEDIN MOUBAYED SAM XIE
CALCULATED-DESIGNED BY CHECKED BY
CONSULTANT FUNCTIONAL SUPERVISOR ALAEDIN MOUBAYED
STATE OF CALIFORNIA - DEPARTMENT OF TRANSPORTATION Caltrans

LAST REVISION 05-05-09 DATE PLOTTED => 02-NOV-2009 TIME PLOTTED => 10:46

DIST	COUNTY	ROUTE	POST MILES TOTAL PROJECT	SHEET No	TOTAL SHEETS
12	Ora	22	R3.6/R12.7	30	61

REGISTERED PROFESSIONAL ENGINEER 05-05-09

10-26-09
PLANS APPROVAL DATE

REGISTERED PROFESSIONAL ENGINEER DIAN CHANDRA No. 2376 Exp. 6/30/11 GEOTECHNICAL STATE OF CALIFORNIA

The State of California or its officers or agents shall not be responsible for the accuracy or completeness of electronic copies of this plan sheet.

ORANGE COUNTY
TRANSPORTATION AUTHORITY
550 SOUTH MAIN STREET
ORANGE, CA 92863

LEIGHTON CONSULTING INC.
17781 COWAN
IRVINE, CA 92614

REFERENCE: CALTRANS SOIL & ROCK LOGGING, CLASSIFICATION, AND PRESENTATION MANUAL (JUNE 2007)

CEMENTATION

Description	Criteria
Weak	Crumbles or breaks with handling or little finger pressure.
Moderate	Crumbles or breaks with considerable finger pressure.
Strong	Will not crumble or break with finger pressure.

CONSISTENCY OF COHESIVE SOILS

Description	Unconfined Compressive Strength (tsf)	Pocket Penetrometer Measurement (tsf)	Torvane Measurement (tsf)	Field Approximation
Very Soft	< 0.25	< 0.25	< 0.12	Easily penetrated several inches by fist
Soft	0.25 to 0.50	0.25 to 0.50	0.12 to 0.25	Easily penetrated several inches by thumb
Medium Stiff	0.50 to 1.0	0.50 to 1.0	0.25 to 0.50	Penetrated several inches by thumb with moderate effort
Stiff	1 to 2	1 to 2	0.50 to 1.0	Readily indented by thumb but penetrated only with great effort
Very Stiff	2 to 4	2 to 4	1.0 to 2.0	Readily indented by thumbnail
Hard	> 4.0	> 4.0	> 2.0	Indented by thumbnail with difficulty

BOREHOLE IDENTIFICATION

Symbol	Hole Type	Description
Size	A	Auger Boring
Size	R P	Rotary drilled boring Rotary percussion boring (air)
Size	R	Rotary drilled diamond core
Size	HD HA	Hand driven (1-inch soil tube) Hand Auger
●	D	Dynamic Cone Penetration Boring
▲	CPT	Cone Penetration Test (ASTM D 5778-95)
⬚	O	Other

Note: Size in inches.

PLASTICITY OF FINE-GRAINED SOILS

Description	Criteria
Nonplastic	A 1/8-inch thread cannot be rolled at any water content.
Low	The thread can barely be rolled and the lump cannot be formed when drier than the plastic limit.
Medium	The thread is easy to roll and not much time is required to reach the plastic limit. The thread cannot be rerolled after reaching the plastic limit. The lump crumbles when drier than the plastic limit.
High	It takes considerable time rolling and kneading to reach the plastic limit. The thread can be rerolled several times after reaching the plastic limit. The lump can be formed without crumbling when drier than the plastic limit.

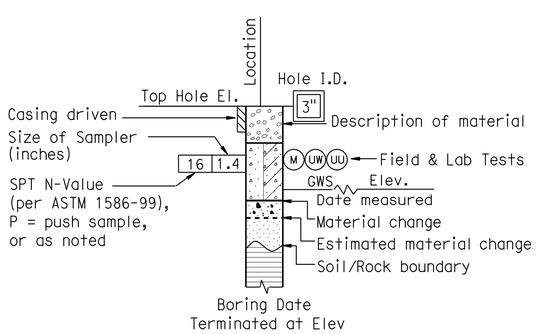

DRY BORING

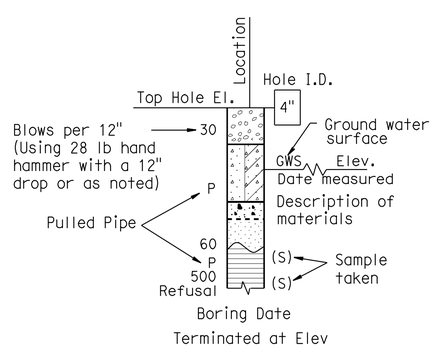

HAND BORING

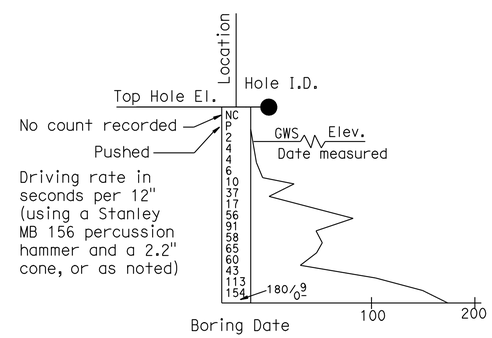

DYNAMIC CONE PENETRATION BORING

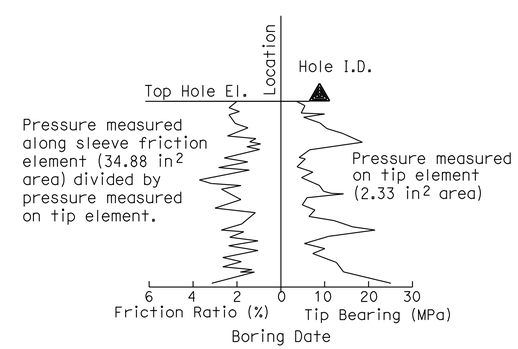

CONE PENETRATION TEST (CPT) SOUNDING

FIGURE 2 (SHEET 1 OF 11)

ENGINEERING SERVICES	GEOTECHNICAL SERVICES
PREPARED BY	BUU TRAN
CHECKED BY	T. KIM

STATE OF CALIFORNIA
DEPARTMENT OF TRANSPORTATION

DIVISION OF ENGINEERING SERVICES
STRUCTURE DESIGN
DESIGN BRANCH

BRIDGE NO.
POST MILE R3.6/R12.7

SOIL LEGEND
LOG OF TEST BORINGS 1 OF 11

GS LOTB SOIL LEGEND

ORIGINAL SCALE IN INCHES FOR REDUCED PLANS 0 1 2 3

CU 12235
EA 0J9601

DISREGARD PRINTS BEARING EARLIER REVISION DATES

REVISION DATES 05-05-09 SHEET OF

FILE => c0j960ra019.dgn

USERNAME => trrichf DATE PLOTTED => 02-NOV-2009 TIME PLOTTED => 10:46

REFERENCE: CALTRANS SOIL & ROCK LOGGING, CLASSIFICATION, AND PRESENTATION MANUAL (JUNE 2007)

DIST	COUNTY	ROUTE	POST MILES TOTAL PROJECT	SHEET No	TOTAL SHEETS
12	Ora	22	R3.6/R12.7	31	61

REGISTERED PROFESSIONAL ENGINEER 05-05-09

10-26-09
PLANS APPROVAL DATE

REGISTERED PROFESSIONAL ENGINEER DIAN CHANDRA No. 2376 Exp. 6/30/11 GEOTECHNICAL STATE OF CALIFORNIA

The State of California or its officers or agents shall not be responsible for the accuracy or completeness of electronic copies of this plan sheet.

ORANGE COUNTY TRANSPORTATION AUTHORITY
550 SOUTH MAIN STREET
ORANGE, CA 92863

LEIGHTON CONSULTING INC.
17781 COWAN
IRVINE, CA 92614

GROUP SYMBOLS AND NAMES

Graphic/Symbol	Group Names	Graphic/Symbol	Group Names
GW	Well-graded GRAVEL Well-graded GRAVEL with SAND	CL	Lean CLAY Lean CLAY with SAND Lean CLAY with GRAVEL SANDY lean CLAY SANDY lean CLAY with GRAVEL GRAVELLY lean CLAY GRAVELLY lean CLAY with SAND
GP	Poorly graded GRAVEL Poorly graded GRAVEL with SAND		
GW-GM	Well-graded GRAVEL with SILT Well-graded GRAVEL with SILT and SAND	CL-ML	SILTY CLAY SILTY CLAY with SAND SILTY CLAY with GRAVEL SANDY SILTY CLAY SANDY SILTY CLAY with GRAVEL GRAVELLY SILTY CLAY GRAVELLY SILTY CLAY with SAND
GW-GC	Well-graded GRAVEL with CLAY (or SILTY CLAY) Well-graded GRAVEL with CLAY and SAND (or SILTY CLAY and SAND)		
GP-GM	Poorly graded GRAVEL with SILT Poorly graded GRAVEL with SILT and SAND	ML	SILT SILT with SAND SILT with GRAVEL SANDY SILT SANDY SILT with GRAVEL GRAVELLY SILT GRAVELLY SILT with SAND
GP-GC	Poorly graded GRAVEL with CLAY (or SILTY CLAY) Poorly graded GRAVEL with CLAY and SAND (or SILTY CLAY and SAND)		
GM	SILTY GRAVEL SILTY GRAVEL with SAND	OL	ORGANIC lean CLAY ORGANIC lean CLAY with SAND ORGANIC lean CLAY with GRAVEL SANDY ORGANIC lean CLAY SANDY ORGANIC lean CLAY with GRAVEL GRAVELLY ORGANIC lean CLAY GRAVELLY ORGANIC lean CLAY with SAND
GC	CLAYEY GRAVEL CLAYEY GRAVEL with SAND		
GC-GM	SILTY, CLAYEY GRAVEL SILTY, CLAYEY GRAVEL with SAND	OL	ORGANIC SILT ORGANIC SILT with SAND ORGANIC SILT with GRAVEL SANDY ORGANIC SILT SANDY ORGANIC SILT with GRAVEL GRAVELLY ORGANIC SILT GRAVELLY ORGANIC SILT with SAND
SW	Well-graded SAND Well-graded SAND with GRAVEL		
SP	Poorly graded SAND Poorly graded SAND with GRAVEL	CH	Fat CLAY Fat CLAY with SAND Fat CLAY with GRAVEL SANDY fat CLAY SANDY fat CLAY with GRAVEL GRAVELLY fat CLAY GRAVELLY fat CLAY with SAND
SW-SM	Well-graded SAND with SILT Well-graded SAND with SILT and GRAVEL		
SW-SC	Well-graded SAND with CLAY (or SILTY CLAY) Well-graded SAND with CLAY and GRAVEL (or SILTY CLAY and GRAVEL)	MH	Elastic SILT Elastic SILT with SAND Elastic SILT with GRAVEL SANDY elastic SILT SANDY elastic SILT with GRAVEL GRAVELLY elastic SILT GRAVELLY elastic SILT with SAND
SP-SM	Poorly graded SAND with SILT Poorly graded SAND with SILT and GRAVEL		
SP-SC	Poorly graded SAND with CLAY (or SILTY CLAY) Poorly graded SAND with CLAY and GRAVEL (or SILTY CLAY and GRAVEL)	OH	ORGANIC fat CLAY ORGANIC fat CLAY with SAND ORGANIC fat CLAY with GRAVEL SANDY ORGANIC fat CLAY SANDY ORGANIC fat CLAY with GRAVEL GRAVELLY ORGANIC fat CLAY GRAVELLY ORGANIC fat CLAY with SAND
SM	SILTY SAND SILTY SAND with GRAVEL		
SC	CLAYEY SAND CLAYEY SAND with GRAVEL	OH	ORGANIC elastic SILT ORGANIC elastic SILT with SAND ORGANIC elastic SILT with GRAVEL SANDY ORGANIC elastic SILT SANDY ORGANIC elastic SILT with GRAVEL GRAVELLY ORGANIC elastic SILT GRAVELLY ORGANIC elastic SILT with SAND
SC-SM	SILTY, CLAYEY SAND SILTY, CLAYEY SAND with GRAVEL		
PT	PEAT	OL/OH	ORGANIC SOIL ORGANIC SOIL with SAND ORGANIC SOIL with GRAVEL SANDY ORGANIC SOIL SANDY ORGANIC SOIL with GRAVEL GRAVELLY ORGANIC SOIL GRAVELLY ORGANIC SOIL with SAND
	COBBLES COBBLES and BOULDERS BOULDERS		

FIELD AND LABORATORY TESTING

- (C) Consolidation (ASTM D 2435)
- (CL) Collapse Potential (ASTM D 5333)
- (CP) Compaction Curve (CTM 216)
- (CR) Corrosivity Testing (CTM 643, CTM 422, CTM 417)
- (CU) Consolidated Undrained Triaxial (ASTM D 4767)
- (DS) Direct Shear (ASTM D 3080)
- (EI) Expansion Index (ASTM D 4829)
- (M) Moisture Content (ASTM D 2216)
- (OC) Organic Content-% (ASTM D 2974)
- (P) Permeability (CTM 220)
- (PA) Particle Size Analysis (ASTM D 422)
- (PI) Plasticity Index (AASHTO T 90) Liquid Limit (AASHTO T 89)
- (PL) Point Load Index (ASTM D 5731)
- (PM) Pressure Meter
- (PP) Pocket Penetrometer
- (R) R-Value (CTM 301)
- (SE) Sand Equivalent (CTM 217)
- (SG) Specific Gravity (AASHTO T 100)
- (SL) Shrinkage Limit (ASTM D 427)
- (SW) Swell Potential (ASTM D 4546)
- (TV) Pocket Torvane
- (UC) Unconfined Compression-Soil (ASTM D 2166) Unconfined Compression-Rock (ASTM D 2938)
- (UU) Unconsolidated Undrained Triaxial (ASTM D 2850)
- (UW) Unit Weight (ASTM D 4767)
- (VS) Vane Shear (AASHTO T 223)

APPARENT DENSITY OF COHESIONLESS SOILS

Description	SPT N_{60} (Blows / 12 inches)
Very loose	0 - 4
Loose	5 - 10
Medium Dense	11 - 30
Dense	31 - 50
Very Dense	> 50

MOISTURE

Description	Criteria
Dry	Absence of moisture, dusty, dry to the touch
Moist	Damp but no visible water
Wet	Visible free water, usually soil is below water table

PERCENT OR PROPORTION OF SOILS

Description	Criteria
Trace	Particles are present but estimated to be less than 5%
Few	5 to 10%
Little	15 to 25%
Some	30 to 45%
Mostly	50 to 100%

PARTICLE SIZE

Description		Size
Boulder		> 12"
Cobble		3" to 12"
Gravel	Coarse	3/4" to 3"
	Fine	No. 4 to 3/4"
Sand	Coarse	No. 10 to No. 4
	Medium	No. 40 to No. 10
	Fine	No. 200 to No. 40

FIGURE 2 (SHEET 2 OF 11)

ENGINEERING SERVICES	GEOTECHNICAL SERVICES
PREPARED BY	BUU TRAN
CHECKED BY	T. KIM

STATE OF CALIFORNIA
DEPARTMENT OF TRANSPORTATION

DIVISION OF ENGINEERING SERVICES
STRUCTURE DESIGN
DESIGN BRANCH

BRIDGE NO.
POST MILE R3.6/R12.7

SOIL LEGEND
LOG OF TEST BORINGS 2 OF 11

GS LOTB SOIL LEGEND

ORIGINAL SCALE IN INCHES FOR REDUCED PLANS 0 1 2 3

CU 12235
EA 0J9601

DISREGARD PRINTS BEARING EARLIER REVISION DATES

REVISION DATES 05-05-09 SHEET OF

FILE => c0j960ra020.dgn

USERNAME => trrichf DATE PLOTTED => 02-NOV-2009 TIME PLOTTED => 10:46

DIST	COUNTY	ROUTE	POST MILES TOTAL PROJECT	SHEET No	TOTAL SHEETS
12	Ora	22	R3.6/R12.7	32	61

REGISTERED PROFESSIONAL ENGINEER 05-05-09

10-26-09
PLANS APPROVAL DATE

REGISTERED PROFESSIONAL ENGINEER OJAN CHANDRA No. 2376 Exp. 6/30/11 GEOTECHNICAL STATE OF CALIFORNIA

The State of California or its officers or agents shall not be responsible for the accuracy or completeness of electronic copies of this plan sheet.

ORANGE COUNTY TRANSPORTATION AUTHORITY
550 SOUTH MAIN STREET
ORANGE, CA 92863

LEIGHTON CONSULTING INC.
17781 COWAN
IRVINE, CA 92614

THE BENCHMARK:

1C-135-92 ELEVATION: 44.39 FEET LEVEL: 2005

FOUND 3¾" OCS ALUMINUM BENCHMARK DISK STAMPED "1C-135-92", SET IN THE SOUTHEAST CORNER OF A 4-FT BY 18-FT CONCRETE CATCH BASIN. MONUMENT IS LOCATED IN THE NORTHEAST CORNER OF THE INTERSECTION OF WESTMINSTER BOULEVARD AND BEACH BOULEVARD, 110-FT EASTERLY OF THE CENTERLINE OF BEACH BOULEVARD AND 38-FT NORTHERLY OF THE CENTERLINE OF WESTMINSTER AVENUE. MONUMENT IS SET LEVEL WITH THE SIDEWALK

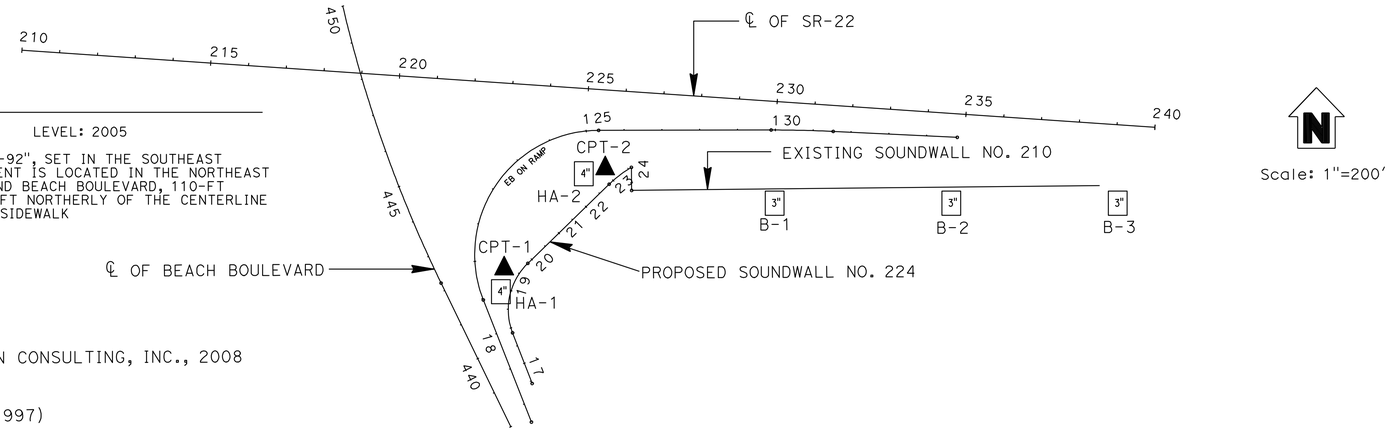

LEGEND

HA-2 [4"] HAND AUGER BORING BY LEIGHTON CONSULTING, INC., 2008

B-3 [3"] BORING BY OTHERS (CALTRANS, 1997)

CPT-2 ▲ CONE PENETRATION TEST BY LEIGHTON CONSULTING, INC., 2008

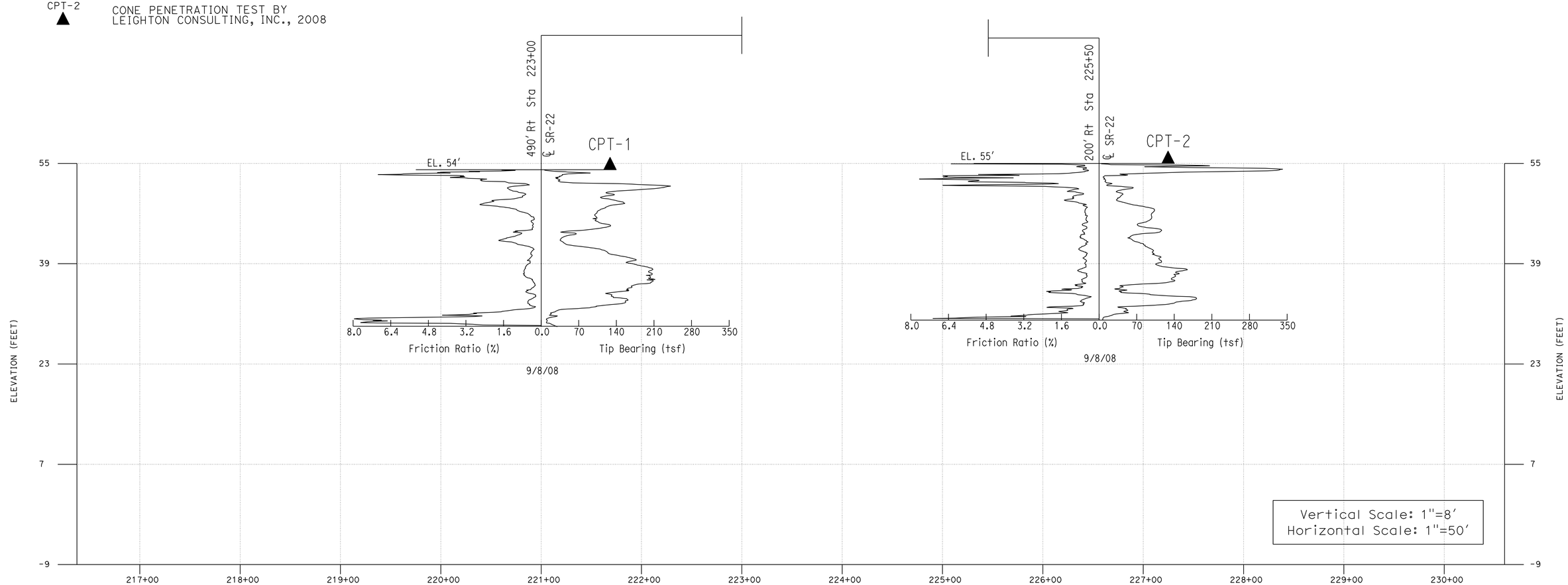

FIGURE 2 (SHEET 3 OF 11)

ENGINEERING SERVICES	GEOTECHNICAL SERVICES	STATE OF CALIFORNIA DEPARTMENT OF TRANSPORTATION	DIVISION OF ENGINEERING SERVICES STRUCTURE DESIGN DESIGN BRANCH	BRIDGE NO. / POST MILES R3.6/R12.7	SR-22 SOUNDWALLS LOG OF TEST BORINGS 3 OF 11
FUNCTIONAL SUPERVISOR	DRAWN BY: BUU TRAN	FIELD INVESTIGATION BY:			
NAME:	CHECKED BY: T. KIM	S. PULIJALA			

OGS CIVIL LOG OF TEST BORINGS SHEET

ORIGINAL SCALE IN INCHES FOR REDUCED PLANS 0 1 2 3

CU 12235
EA 0J9601

DISREGARD PRINTS BEARING EARLIER REVISION DATES → 5-05-09

REVISION DATES SHEET OF

FILE => c0j960ra021.dgn

USERNAME => trrichf DATE PLOTTED => 02-NOV-2009 TIME PLOTTED => 10:47

DIST	COUNTY	ROUTE	POST MILES TOTAL PROJECT	SHEET No	TOTAL SHEETS
12	Ora	22	R3.6/R12.7	33	61

REGISTERED PROFESSIONAL ENGINEER 05-05-09

10-26-09
PLANS APPROVAL DATE

REGISTERED PROFESSIONAL ENGINEER OJAN CHANDRA No. 2376 Exp. 6/30/11 GEOTECHNICAL STATE OF CALIFORNIA

The State of California or its officers or agents shall not be responsible for the accuracy or completeness of electronic copies of this plan sheet.

ORANGE COUNTY TRANSPORTATION AUTHORITY
550 SOUTH MAIN STREET
ORANGE, CA 92863

LEIGHTON CONSULTING INC.
17781 COWAN
IRVINE, CA 92614

THE BENCHMARK:

1C-135-92 ELEVATION: 44.39 FEET LEVEL: 2005

FOUND 3¾" OCS ALUMINUM BENCHMARK DISK STAMPED "1C-135-92", SET IN THE SOUTHEAST CORNER OF A 4-FT BY 18-FT CONCRETE CATCH BASIN. MONUMENT IS LOCATED IN THE NORTHEAST CORNER OF THE INTERSECTION OF WESTMINSTER BOULEVARD AND BEACH BOULEVARD, 110-FT EASTERLY OF THE CENTERLINE OF BEACH BOULEVARD AND 38-FT NORTHERLY OF THE CENTERLINE OF WESTMINSTER AVENUE. MONUMENT IS SET LEVEL WITH THE SIDEWALK

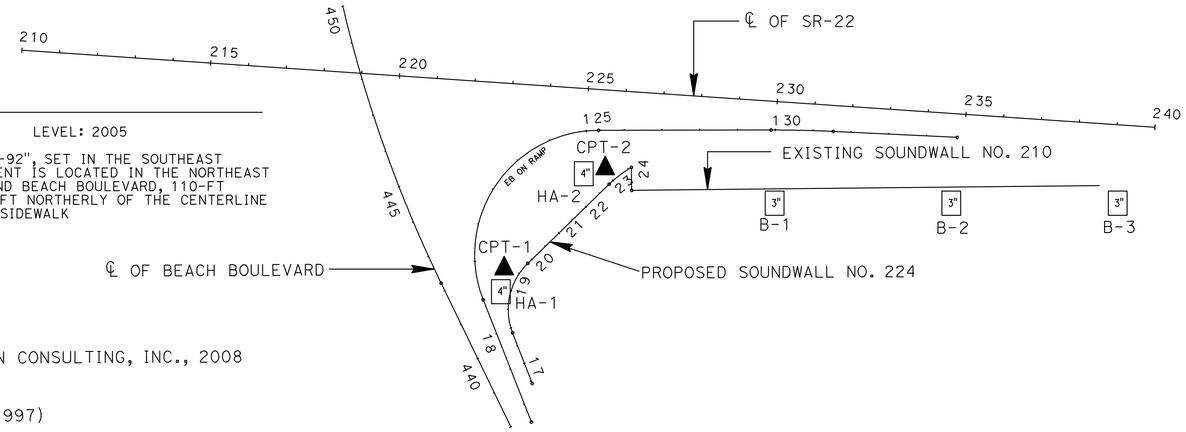

Scale: 1"=200'

LEGEND

HA-2 [4"] HAND AUGER BORING BY LEIGHTON CONSULTING, INC., 2008

B-3 [3"] BORING BY OTHERS (CALTRANS, 1997)

CPT-2 ▲ CONE PENETRATION TEST BY LEIGHTON CONSULTING, INC., 2008

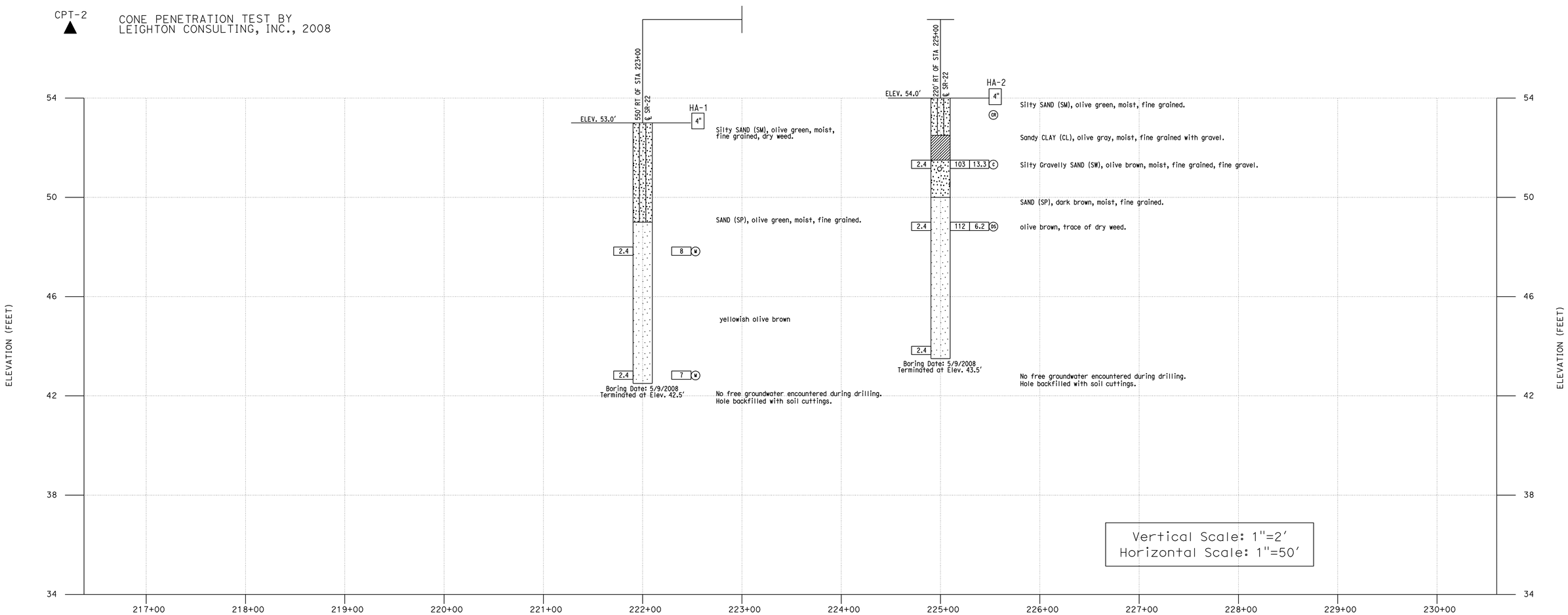

FIGURE 2 (SHEET 4 OF 11)

ENGINEERING SERVICES	GEOTECHNICAL SERVICES	STATE OF CALIFORNIA DEPARTMENT OF TRANSPORTATION	DIVISION OF ENGINEERING SERVICES STRUCTURE DESIGN DESIGN BRANCH	BRIDGE NO. / POST MILES R3.6/R12.7	SR-22 SOUNDWALLS LOG OF TEST BORINGS 4 OF 11
FUNCTIONAL SUPERVISOR	DRAWN BY: BUU TRAN	FIELD INVESTIGATION BY:			
NAME:	CHECKED BY: T. KIM	S. PULIJALA			
OGS CIVIL LOG OF TEST BORINGS SHEET	ORIGINAL SCALE IN INCHES FOR REDUCED PLANS 0 1 2 3	CU 12235 EA 0J9601	DISREGARD PRINTS BEARING EARLIER REVISION DATES	REVISION DATES 5-05-09	SHEET OF

FILE => c0j960ra022.dgn

USERNAME => trright DATE PLOTTED => 02-NOV-2009 TIME PLOTTED => 10:47

DIST	COUNTY	ROUTE	POST MILES TOTAL PROJECT	SHEET No	TOTAL SHEETS
12	Ora	22	R3.6/R12.7	34	61

REGISTERED PROFESSIONAL ENGINEER 05-05-09

10-26-09
PLANS APPROVAL DATE

REGISTERED PROFESSIONAL ENGINEER — ROTAN CHANDRA — No. 2376 — Exp. 6/30/11 — GEOTECHNICAL — STATE OF CALIFORNIA

The State of California or its officers or agents shall not be responsible for the accuracy or completeness of electronic copies of this plan sheet.

ORANGE COUNTY TRANSPORTATION AUTHORITY
550 SOUTH MAIN STREET
ORANGE, CA 92863

LEIGHTON CONSULTING INC.
17781 COWAN
IRVINE, CA 92614

THE BENCHMARK :

SA-307-83 ELEVATION: 139.67 FEET ADJUSTMENT: NAD88, LEVEL 1990

FOUND 3¾" OCS ALUMINUM BENCHMARK DISK STAMPED "SA-307-83", SET IN THE NORTHWESTERLY CORNER OF A 4-FT BY 11-FT CONCRETE CATCH BASIN. MONUMENT IS LOCATED IN THE SOUTHEASTERLY CORNER OF THE INTERSECTION OF FLOWER STREET AND LA VETA AVENUE, 39-FT SOUTHERLY OF THE CENTERLINE OF LA VETA AND 58.5-FT EASTERLY OF THE CENTERLINE OF FLOWER. MONUMENT IS SET LEVEL WITH THE SIDEWALK

LEGEND

HA-3 [4"] HAND AUGER BORING BY LEIGHTON CONSULTING, INC., 2008

CPT-3 ▲ CONE PENETRATION TEST BY LEIGHTON CONSULTING, INC., 2008

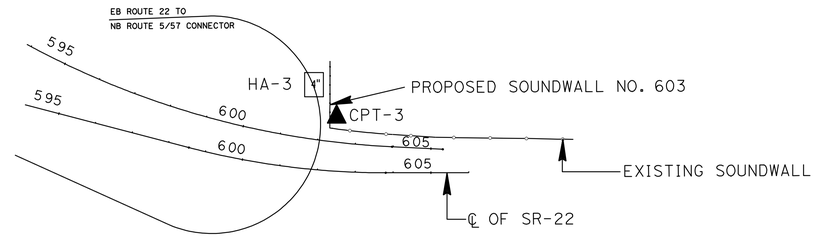

N

Scale: 1"=200'

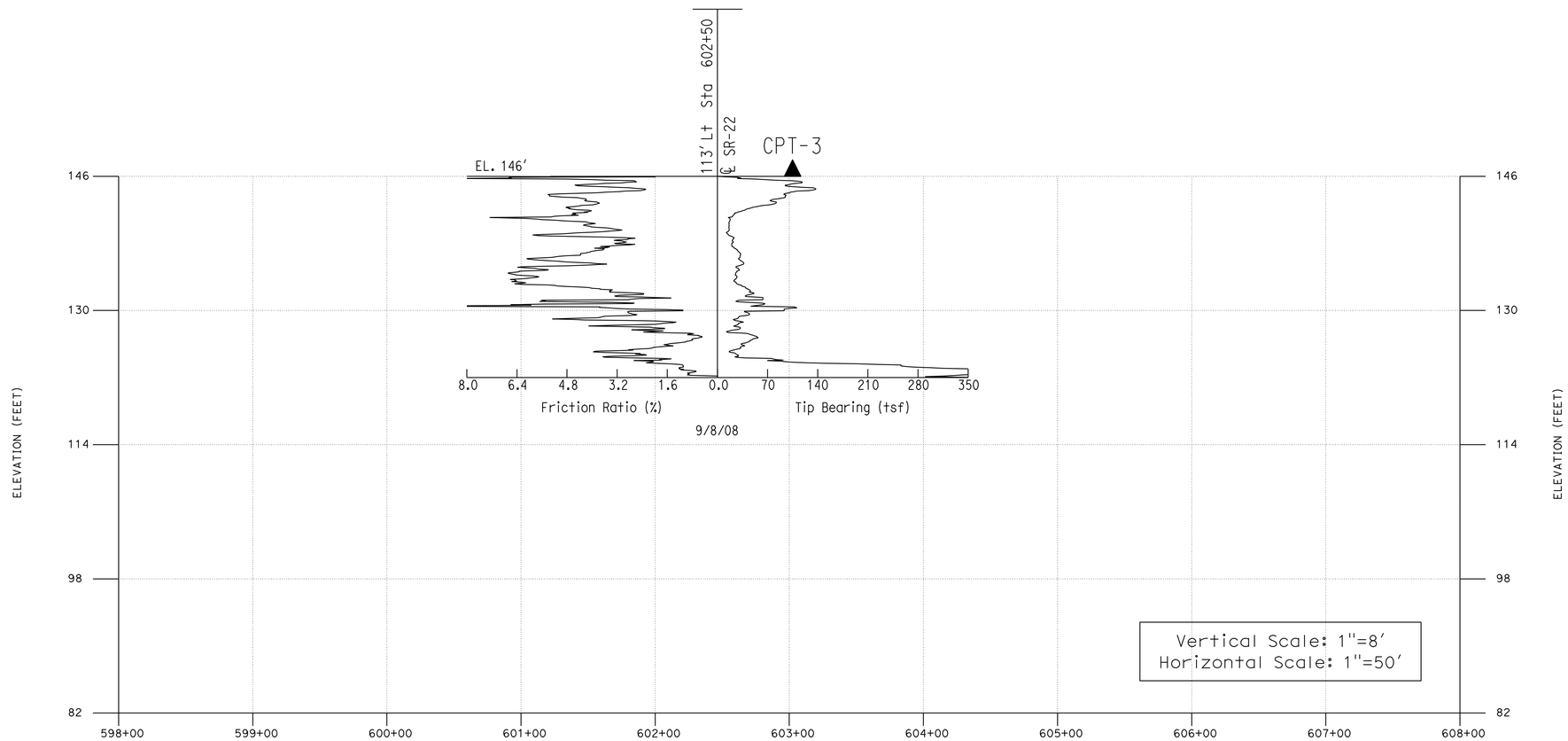

FIGURE 2 (SHEET 5 OF 11)

ENGINEERING SERVICES	GEOTECHNICAL SERVICES	STATE OF CALIFORNIA DEPARTMENT OF TRANSPORTATION	DIVISION OF ENGINEERING SERVICES STRUCTURE DESIGN DESIGN BRANCH	BRIDGE NO. / POST MILES R3.6/R12.7	SR-22 SOUNDWALLS LOG OF TEST BORINGS 5 OF 11
FUNCTIONAL SUPERVISOR	DRAWN BY: BUU TRAN	FIELD INVESTIGATION BY:			
NAME:	CHECKED BY: T. KIM	S. PULIJALA			
OGS CIVIL LOG OF TEST BORINGS SHEET	ORIGINAL SCALE IN INCHES FOR REDUCED PLANS 0 1 2 3		CU 12235 EA 0J9601	DISREGARD PRINTS BEARING EARLIER REVISION DATES 5-05-09	REVISION DATES / SHEET / OF

FILE => c0j960ra023.dgn

USERNAME => trrichf DATE PLOTTED => 02-NOV-2009 TIME PLOTTED => 10:47

DIST	COUNTY	ROUTE	POST MILES TOTAL PROJECT	SHEET No	TOTAL SHEETS
12	Ora	22	R3.6/R12.7	35	61

REGISTERED PROFESSIONAL ENGINEER 05-05-09

10-26-09
PLANS APPROVAL DATE

REGISTERED PROFESSIONAL ENGINEER — OJAN CHANDRA — No. 2376 — Exp. 6/30/11 — GEOTECHNICAL — STATE OF CALIFORNIA

The State of California or its officers or agents shall not be responsible for the accuracy or completeness of electronic copies of this plan sheet.

ORANGE COUNTY TRANSPORTATION AUTHORITY
550 SOUTH MAIN STREET
ORANGE, CA 92863

LEIGHTON CONSULTING INC.
17781 COWAN
IRVINE, CA 92614

THE BENCHMARK :

SA-307-83 ELEVATION: 139.67 FEET ADJUSTMENT: NAD88, LEVEL 1990

FOUND 3¾" OCS ALUMINUM BENCHMARK DISK STAMPED "SA-307-83", SET IN THE NORTHWESTERLY CORNER OF A 4-FT BY 11-FT CONCRETE CATCH BASIN. MONUMENT IS LOCATED IN THE SOUTHEASTERLY CORNER OF THE INTERSECTION OF FLOWER STREET AND LA VETA AVENUE, 39-FT SOUTHERLY OF THE CENTERLINE OF LA VETA AND 58.5-FT EASTERLY OF THE CENTERLINE OF FLOWER. MONUMENT IS SET LEVEL WITH THE SIDEWALK

LEGEND

HA-3 [4"] HAND AUGER BORING BY LEIGHTON CONSULTING, INC., 2008

CPT-3 ▲ CONE PENETRATION TEST BY LEIGHTON CONSULTING, INC., 2008

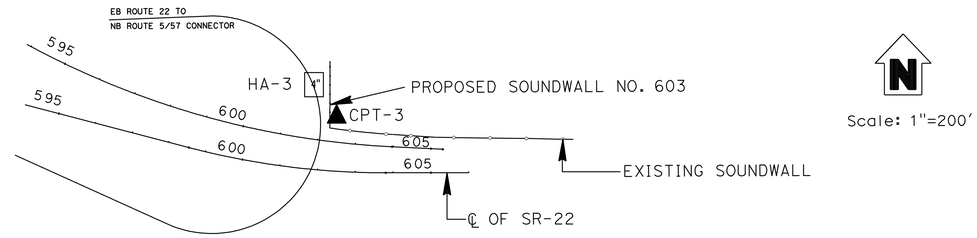

N
Scale: 1"=200'

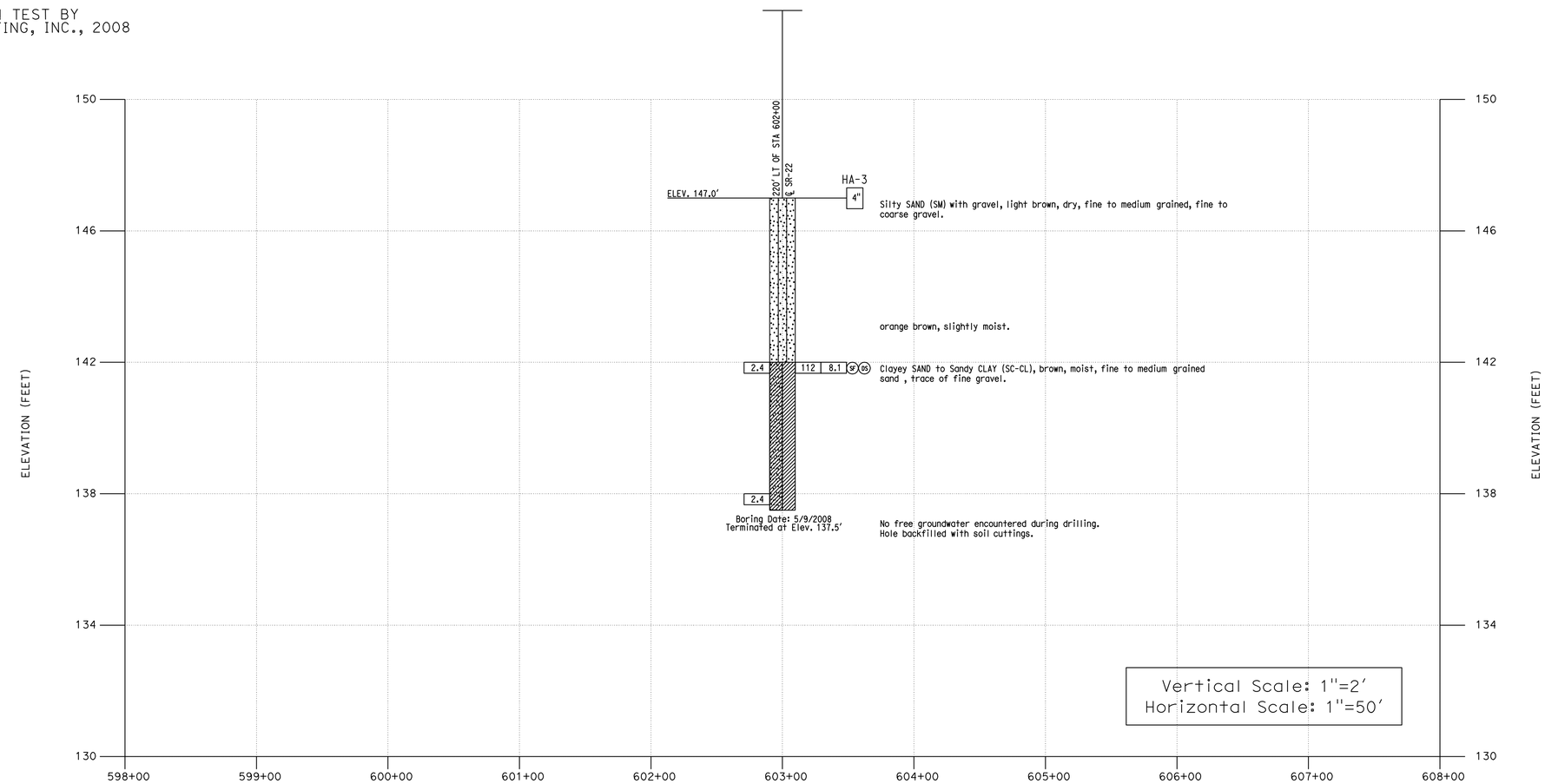

FIGURE 2 (SHEET 6 OF 11)

ENGINEERING SERVICES	GEOTECHNICAL SERVICES	STATE OF CALIFORNIA DEPARTMENT OF TRANSPORTATION	DIVISION OF ENGINEERING SERVICES STRUCTURE DESIGN DESIGN BRANCH	BRIDGE NO. / POST MILES R3.6/R12.7	SR-22 SOUNDWALLS LOG OF TEST BORINGS 6 OF 11
FUNCTIONAL SUPERVISOR	DRAWN BY: BUU TRAN	FIELD INVESTIGATION BY:			
NAME:	CHECKED BY: T. KIM	S. PULIJALA			

OGS CIVIL LOG OF TEST BORINGS SHEET

ORIGINAL SCALE IN INCHES FOR REDUCED PLANS 0 1 2 3

CU 12235
EA 0J9601

DISREGARD PRINTS BEARING EARLIER REVISION DATES 5-05-09

REVISION DATES SHEET OF

FILE => c0j960ra024.dgn

USERNAME => trrlcnf DATE PLOTTED => 02-NOV-2009 TIME PLOTTED => 10:47

DIST	COUNTY	ROUTE	POST MILES TOTAL PROJECT	SHEET No	TOTAL SHEETS
12	Ora	22	R3.6/R12.7	36	61

REGISTERED PROFESSIONAL ENGINEER 05-05-09

10-26-09
PLANS APPROVAL DATE

REGISTERED PROFESSIONAL ENGINEER — OTAN CHANDRA — No. 2376 — Exp. 6/30/11 — GEOTECHNICAL — STATE OF CALIFORNIA

The State of California or its officers or agents shall not be responsible for the accuracy or completeness of electronic copies of this plan sheet.

ORANGE COUNTY TRANSPORTATION AUTHORITY
550 SOUTH MAIN STREET
ORANGE, CA 92863

LEIGHTON CONSULTING INC.
17781 COWAN
IRVINE, CA 92614

THE BENCHMARK :

SA-283-75 ELEVATION: 201.39 FEET ADJUSTMENT: NAD88, LEVEL 1992

FOUND 3¾" OCS ALUMINUM BENCHMARK DISK STAMPED "SA-283-75", SET IN THE SOUTHEASTERLY CORNER OF A 4-FT BY 8-FT CONCRETE CATCH BASIN. MONUMENT IS LOCATED IN THE SOUTHWESTERLY CORNER OF THE INTERSECTION OF CAMBRIDGE STREET AND ROSEWOOD AVENUE, 33-FT WESTERLY OF THE CENTERLINE OF CAMBRIDGE AND 106-FT SOUTHERLY OF THE CENTERLINE OF ROSEWOOD. MONUMENT IS SET LEVEL WITH THE SIDEWALK

LEGEND

HA-7 [4"] HAND AUGER BORING BY LEIGHTON CONSULTING, INC., 2008

SW-94-11 [2"] BORING BY OTHERS (CALTRANS, 1994)

RB-94-12 [2"] BORING BY OTHERS (CALTRANS, 1994)

CPT-4 ▲ CONE PENETRATION TEST BY LEIGHTON CONSULTING, INC., 2008

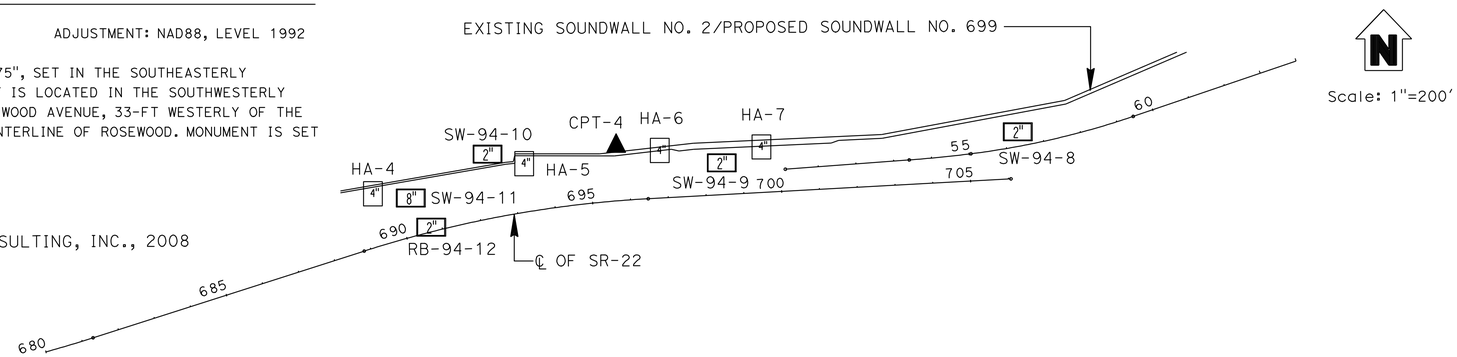

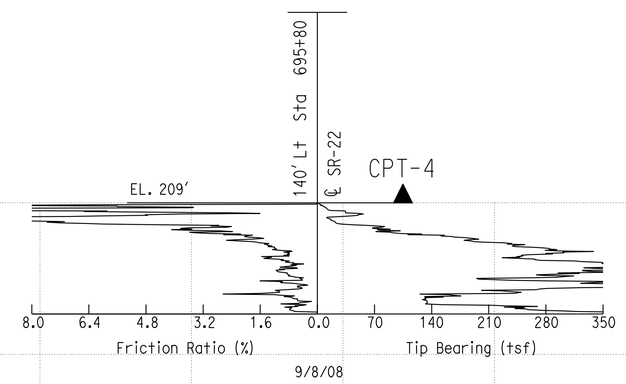

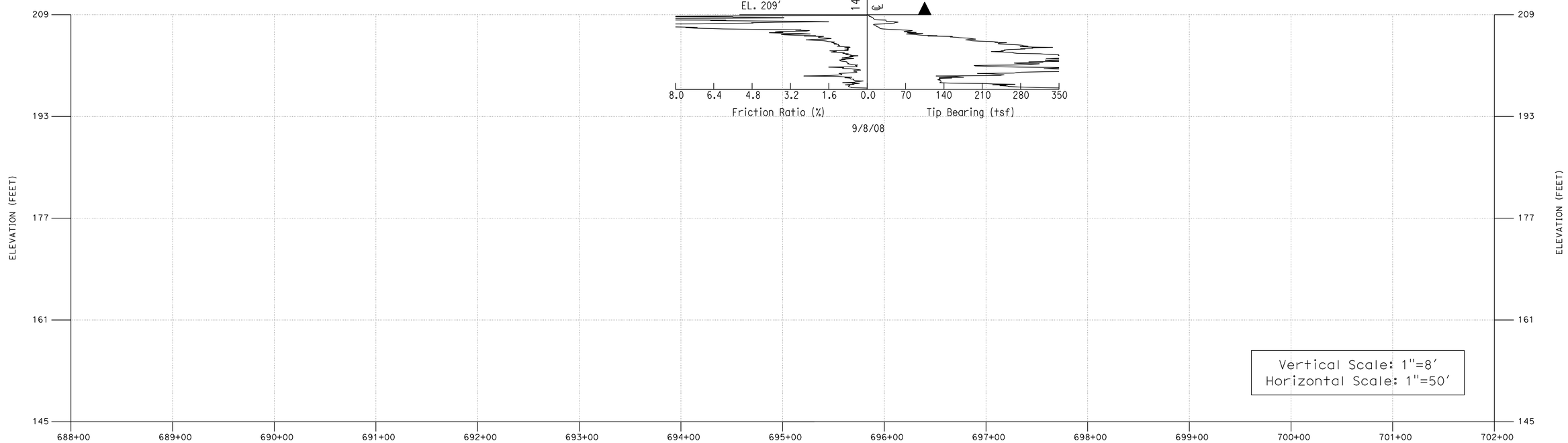

FIGURE 2 (SHEET 7 OF 11)

ENGINEERING SERVICES	GEOTECHNICAL SERVICES	STATE OF CALIFORNIA DEPARTMENT OF TRANSPORTATION	DIVISION OF ENGINEERING SERVICES STRUCTURE DESIGN	BRIDGE NO.	SR-22 SOUNDWALLS
FUNCTIONAL SUPERVISOR	DRAWN BY: BUU TRAN	FIELD INVESTIGATION BY:	DESIGN BRANCH	POST MILES R3.6/R12.7	LOG OF TEST BORINGS 7 OF 11
NAME:	CHECKED BY: T. KIM	S. PULIJALA			

OGS CIVIL LOG OF TEST BORINGS SHEET

ORIGINAL SCALE IN INCHES FOR REDUCED PLANS 0 1 2 3

CU 12235
EA 0J9601

DISREGARD PRINTS BEARING EARLIER REVISION DATES → 5-05-09

REVISION DATES SHEET OF

FILE => c0j960ra025.dgn

USERNAME => trrichf DATE PLOTTED => 02-NOV-2009 TIME PLOTTED => 10:48

DIST	COUNTY	ROUTE	POST MILES TOTAL PROJECT	SHEET No	TOTAL SHEETS
12	Ora	22	R3.6/R12.7	37	61

REGISTERED PROFESSIONAL ENGINEER 05-05-09

10-26-09
PLANS APPROVAL DATE

REGISTERED PROFESSIONAL ENGINEER — ROTAN CHANDRA — No. 2376 — Exp. 6/30/11 — GEOTECHNICAL — STATE OF CALIFORNIA

The State of California or its officers or agents shall not be responsible for the accuracy or completeness of electronic copies of this plan sheet.

ORANGE COUNTY TRANSPORTATION AUTHORITY
550 SOUTH MAIN STREET
ORANGE, CA 92863

LEIGHTON CONSULTING INC.
17781 COWAN
IRVINE, CA 92614

THE BENCHMARK :

SA-283-75 ELEVATION: 201.39 FEET ADJUSTMENT: NAD88, LEVEL 1992

FOUND 3¾" OCS ALUMINUM BENCHMARK DISK STAMPED "SA-283-75", SET IN THE SOUTHEASTERLY CORNER OF A 4-FT BY 8-FT CONCRETE CATCH BASIN. MONUMENT IS LOCATED IN THE SOUTHWESTERLY CORNER OF THE INTERSECTION OF CAMBRIDGE STREET AND ROSEWOOD AVENUE, 33-FT WESTERLY OF THE CENTERLINE OF CAMBRIDGE AND 106-FT SOUTHERLY OF THE CENTERLINE OF ROSEWOOD. MONUMENT IS SET LEVEL WITH THE SIDEWALK

LEGEND

HA-7 [4"] HAND AUGER BORING BY LEIGHTON CONSULTING, INC., 2008

SW-94-11 [2"] BORING BY OTHERS (CALTRANS, 1994)

RB-94-12 [2"] BORING BY OTHERS (CALTRANS, 1994)

CPT-4 ▲ CONE PENETRATION TEST BY LEIGHTON CONSULTING, INC., 2008

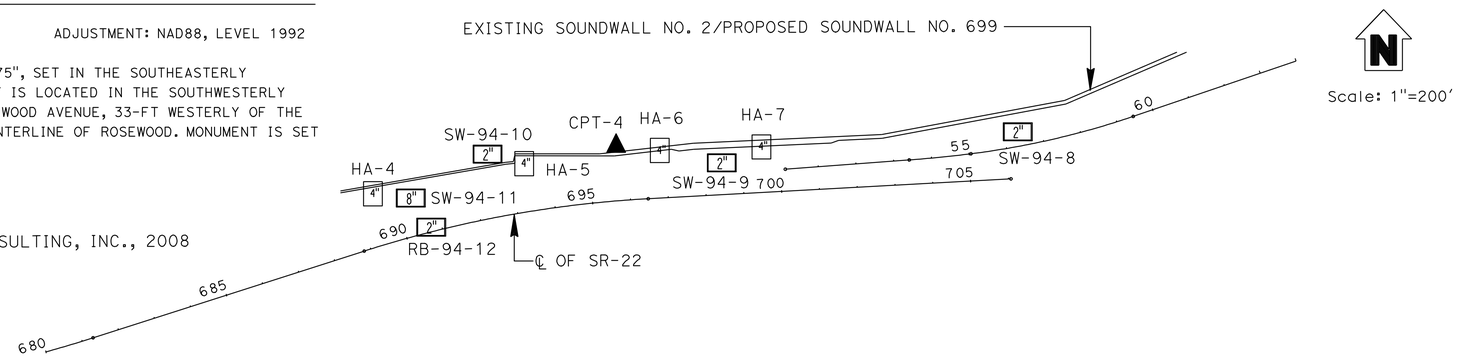

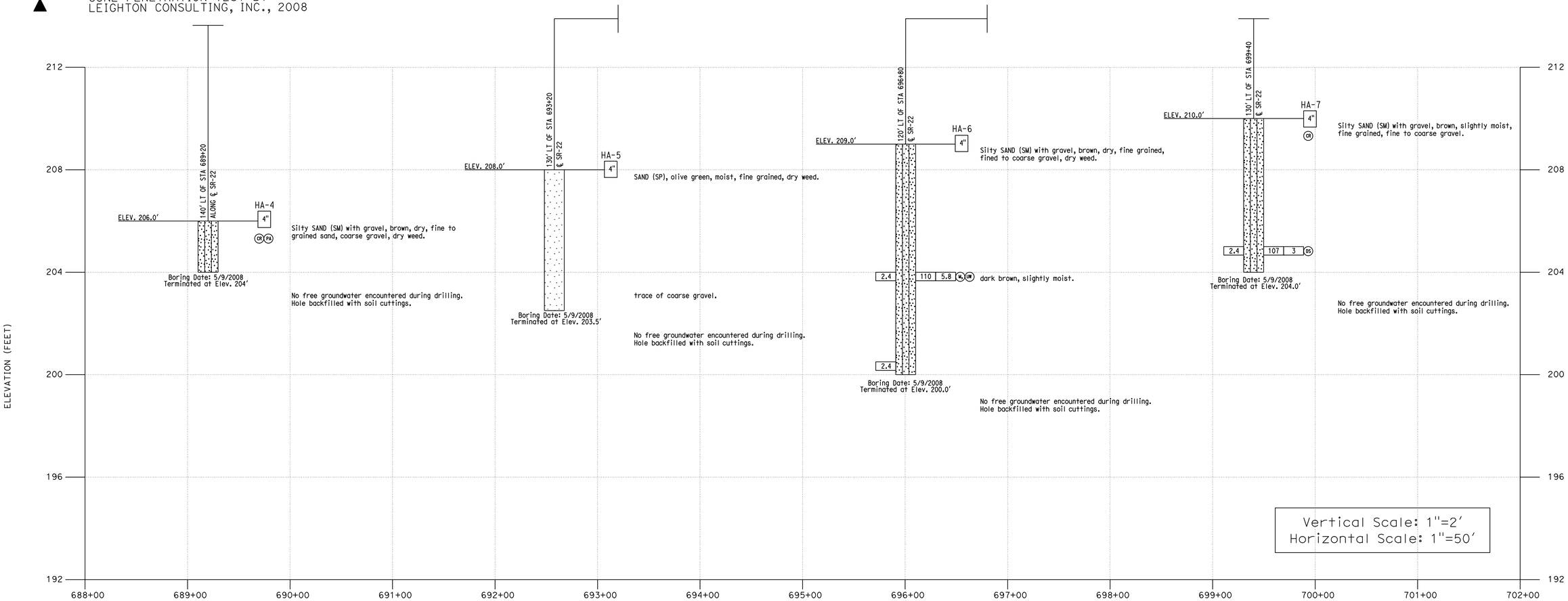

FIGURE 2 (SHEET 8 OF 11)

ENGINEERING SERVICES	GEOTECHNICAL SERVICES	STATE OF CALIFORNIA DEPARTMENT OF TRANSPORTATION	DIVISION OF ENGINEERING SERVICES STRUCTURE DESIGN	BRIDGE NO.	SR-22 SOUNDWALLS
FUNCTIONAL SUPERVISOR	DRAWN BY: BUU TRAN	FIELD INVESTIGATION BY:	DESIGN BRANCH	POST MILES R3.6/R12.7	LOG OF TEST BORINGS 8 OF 11
NAME:	CHECKED BY: T. KIM	S. PULIJALA			

OGS CIVIL LOG OF TEST BORINGS SHEET

ORIGINAL SCALE IN INCHES FOR REDUCED PLANS 0 1 2 3

CU 12235
EA 0J9601

DISREGARD PRINTS BEARING EARLIER REVISION DATES → 5-05-09

REVISION DATES | SHEET | OF

FILE => c0j960ra026.dgn

USERNAME => trrichf DATE PLOTTED => 02-NOV-2009 TIME PLOTTED => 10:48

DIST.	COUNTY	ROUTE	POST MILE TOTAL PROJECT	SHEET NO.	TOTAL SHEETS
12	Ora	22	R3.6/R12.7	22	24

Shown from 38

ISTEN EI EE

12 11 95

FLA SUPPRVSN TE

BENCH MARK

(ZH2127)
FROM USGS TOPOGRAPHIC MAP
LOCATED ON 210 FT SOUTH OF
INTERSECTION OF NEWLAND ST
U.C. AND RTE 22 STAT ON LINE ON
C/L OF NEWLAND ST

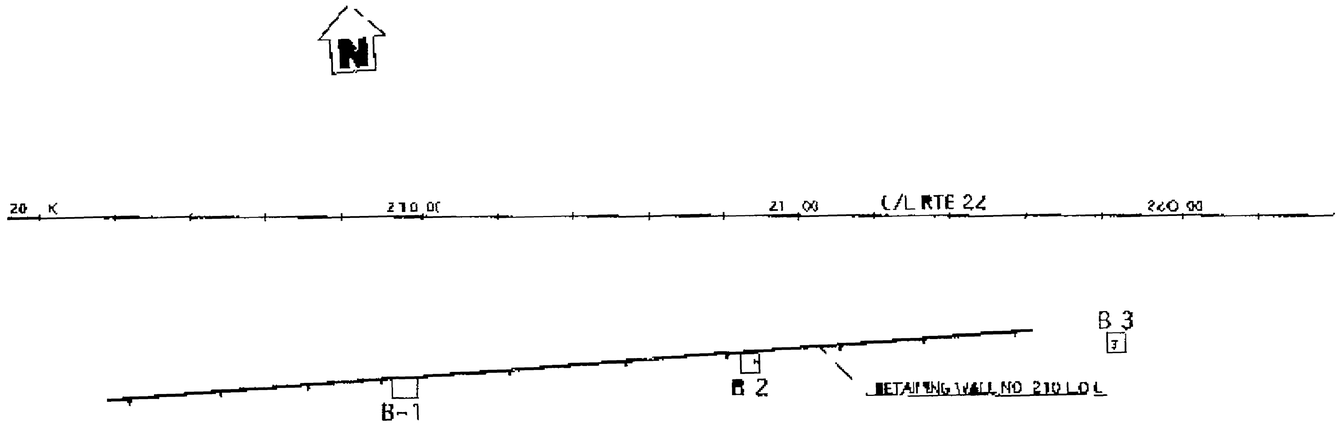

REGISTERED PROFESSIONAL ENGINEER
JUAN CHANDRA
No. 2376
Exp. 6/30/11
GEOTECHNICAL
STATE OF CALIFORNIA

To accompany plans dated 10-26-09

OFFICE OF STRUCTURE FOUNDATIONS-ENGINEERING SERVICES CENTER					
As-Built Log of Test Borings sheet is considered an informational document only. As such, the State of California registration seal with signature, licence number and registration certificate expiration date confirm that this is a true and accurate copy of the original document. It does not attest to the accuracy or validity of the information contained in the original document. This drawing is available and presented only for the convenience of any bidder, contractor or other interested party.					
DIST.	COUNTY	ROUTE	MILE POST-TOTAL PROJECT	SHEET NO.	TOTAL SHEETS
12	Ora	22	R3.6/R12.7	38	61
REGISTERED ENGINEER-GEOTECHNICAL 05-05-09					
SR-22 SOUNDWALLS					
LOG OF TEST BORINGS 9 OF 11					
NOTE: A COPY OF THIS LOG OF TEST BORINGS IS AVAILABLE AT OFFICE OF STRUCTURE MAINTENANCE AND INVESTIGATIONS, SACRAMENTO, CALIFORNIA			CU: 12235 EA: 0J9601	BRIDGE NO.	

PLAN
HOR. 1 00

NO CHANGES

AS BUILT
CORRECTIONS BY
CONTRACT NO
DATE

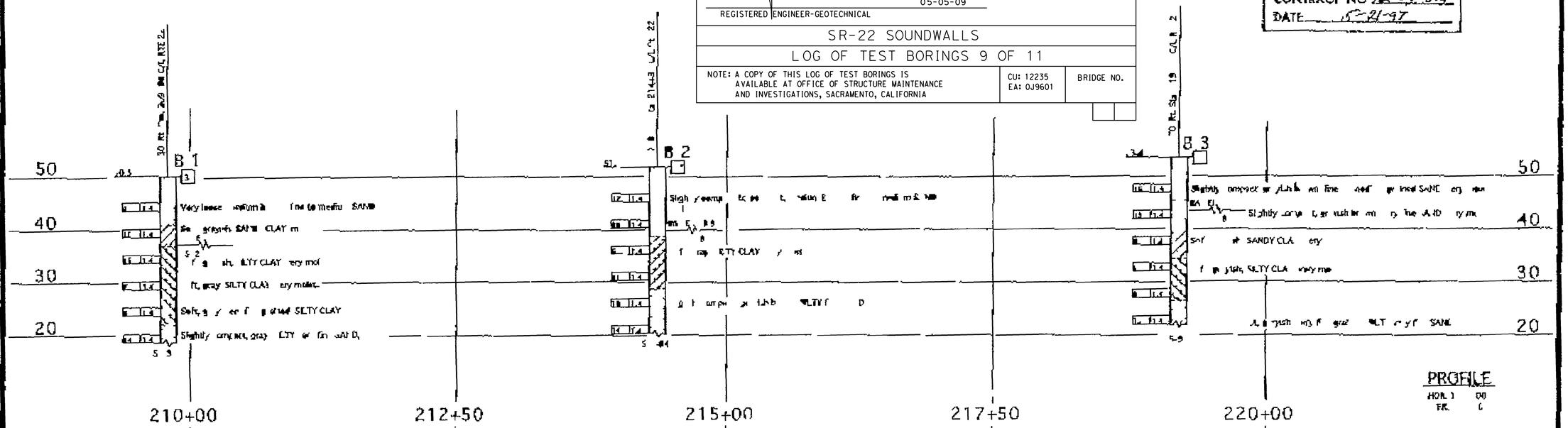

PROFILE
HOR. 1 00
FR. 0

DIVISION OF ENGINEERING SERVICES, MATERIALS AND RESEARCH | OFFICE OF ENGINEERING GEOLOGY | FIELD INVESTIGATION

State of CALIFORNIA DEPARTMENT OF TRANSPORTATION

DIVISION OF STRUCTURES STRUCTURE DESIGN

SOUND WALL NO 210

LOG OF TEST BORINGS SW-6

ORIGINAL SCALE IN INCHES DO NOT REDUCE OR ENLARGE

CU 12
EA 0J0 21

c0j960ra027.tif

REFERENCE
BASE MAP ADAPTED FROM CAD FILE STATE ROUTE 55 22 INTERCHANGE BY OVERDRUP CIVIL INC DATED JUNE 16 1995

BENCHMARK
672 C-68, 64.495, SET RAMSET ON SW COR OF PCC BASE FOR ELECTROLIER #18323 85 EAST OF CL STA 672+00 ROUN OF FAIRHAVEN AVE ON

NOTE
SAMPLER IS EITHER THE STANDARD SPT SAMPLER WITH ID=3.6cm OR A MODIFIED SPLIT BARREL SAMPLER WITH ID=6.1cm AND OD=7.6cm AS NOTED. PENETRATION INDEX IS BASED ON USING A 63.6 Kg HAMMER WITH A 0.76cm DROP

DIST	COUNTY	ROUTE	KILOMETER POSTS TOTAL PROJECT	SHEET NO	TOTAL SHEETS
12	Ora				

REGISTERED CIVIL ENGINEER
PRINCIPAL ENGINEER
2-24-98

REGISTERED PROFESSIONAL ENGINEER JALAL YAKEL No 045350 Exp 09-30-98 CIVIL STATE OF CALIFORNIA

PLANS APPROVAL DATE

NINYO & MOORE
9272 JERONIMO RD STE 125A
IRVINE CA 92718

The State of California or its officers or agents shall not be responsible for the accuracy or completeness of electronic copies of this plan sheet

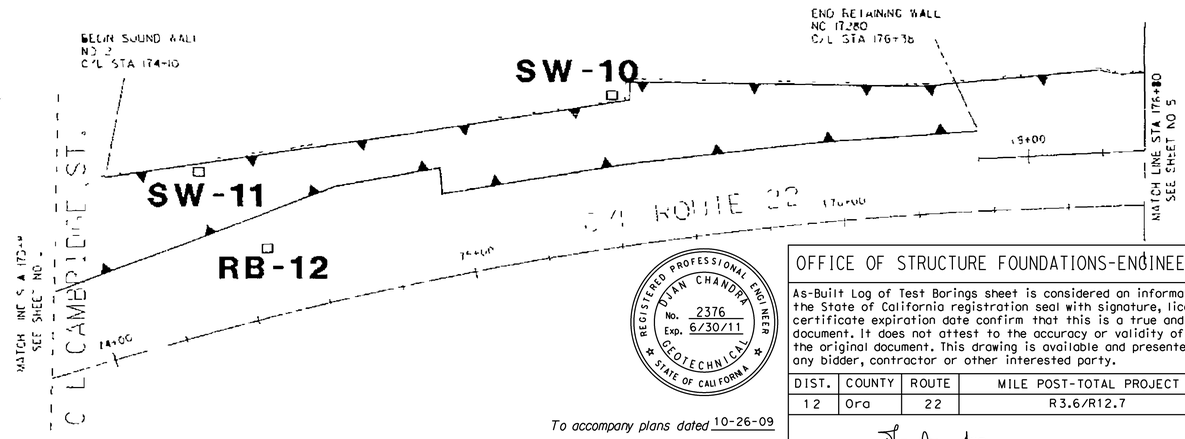

REGISTERED PROFESSIONAL ENGINEER DIAN CHANDRA No. 2376 Exp. 6/30/11 GEOTECHNICAL STATE OF CALIFORNIA

To accompany plans dated 10-26-09

OFFICE OF STRUCTURE FOUNDATIONS-ENGINEERING SERVICES CENTER

As-Built Log of Test Borings sheet is considered an informational document only. As such, the State of California registration seal with signature, licence number and registration certificate expiration date confirm that this is a true and accurate copy of the original document. It does not attest to the accuracy or validity of the information contained in the original document. This drawing is available and presented only for the convenience of any bidder, contractor or other interested party.

DIST.	COUNTY	ROUTE	MILE POST-TOTAL PROJECT	SHEET NO.	TOTAL SHEETS
12	Ora	22	R3.6/R12.7	39	61

05-05-09
REGISTERED ENGINEER-GEOTECHNICAL

SR-22 SOUNDWALLS
LOG OF TEST BORINGS 10 OF 11

NOTE: A COPY OF THIS LOG OF TEST BORINGS IS AVAILABLE AT OFFICE OF STRUCTURE MAINTENANCE AND INVESTIGATIONS, SACRAMENTO, CALIFORNIA

CU: 12235
EA: 0J9601

BRIDGE NO.

SCALE
PLAN VIEW
METRIC 0 20 40
SCALE 1:1000
PROFILE
VERTICAL PROFILE 1:100
HORIZONTAL PROFILE 1:1000

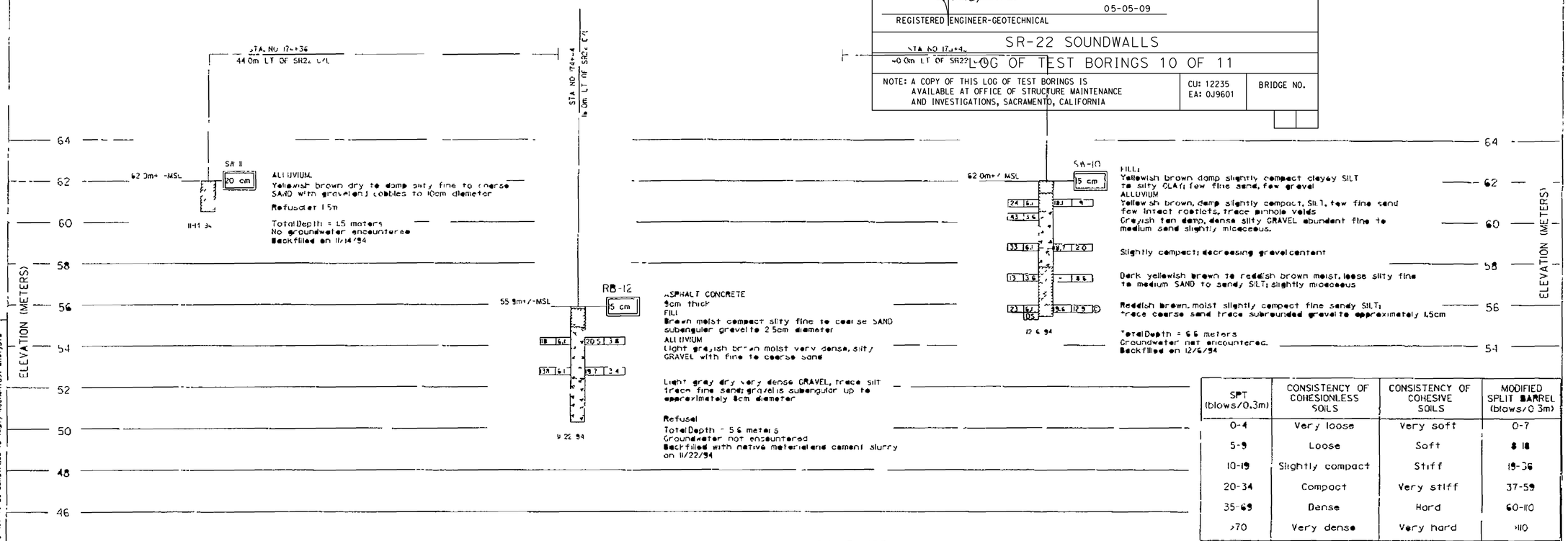

SPT (blows/0.3m)	CONSISTENCY OF COHESIONLESS SOILS	CONSISTENCY OF COHESIVE SOILS	MODIFIED SPLIT BARREL (blows/0.3m)
0-4	Very loose	Very soft	0-7
5-9	Loose	Soft	8-18
10-19	Slightly compact	Stiff	19-36
20-34	Compact	Very stiff	37-59
35-69	Dense	Hard	60-110
>70	Very dense	Very hard	>110

R-36

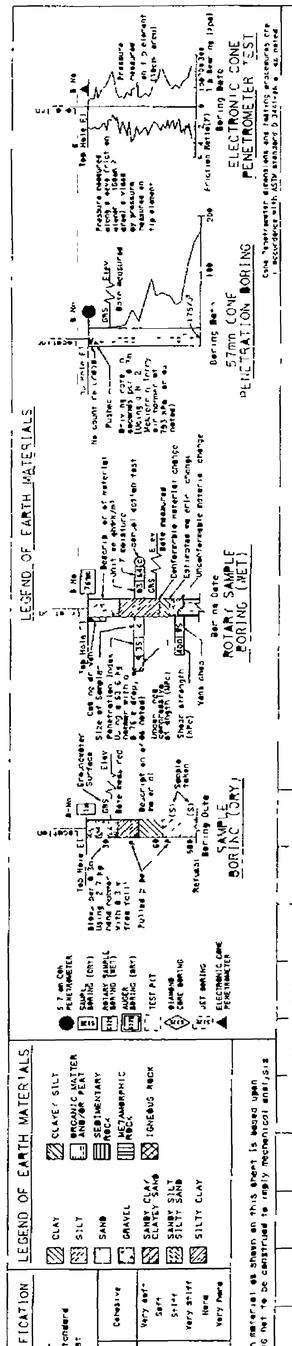

DRAWN BY	LR	FIELD INVESTIGATOR	ROB WHEELER STAFF GEOLOGIST
CHECKED BY	MAS	MONTH YEAR DATE	NOV 1994

PREPARED FOR STATE OF
CALIFORNIA
DEPARTMENT OF TRANSPORTATION

BRIDGE NO -
KILOMETER POST -

STATE ROUTE 55/22 INTERCHANGE
ORANGE COUNTY, CALIFORNIA
SOUND WALLS AND RETAINING WALLS
LOG OF TEST BORINGS

ORIGINAL SCALE IS IN MILLIMETERS FOR REDUCED PLANS 0 10 20 30

EARLIER REVISION DATES

REVISION DATES (PRELIMINARY STAGE ONLY) SHEET OF

CU 12209 | EA 013311

2 24-98

SI 18

c0j960ra028.tif

BASE MAP ADAPTED FROM CAD FILE "STATE ROUTE 55/22 INTERCHANGE", BY SVERDRUP CIVIL, INC., DATED JUNE 16, 1995.

BENCHMARK:
672-C-68. 64.455'. SET RAMSET ON SW COR. OF PCC BASE FOR ELECTROLIER #16373. 85' EAST OF CL STA. 672+00, 100'N OF FAIRHAVEN AVE. O.C.

NOTE:
SAMPLER IS EITHER THE STANDARD SPT SAMPLER WITH ID=3.6cm OR A MODIFIED SPLIT BARREL SAMPLER WITH ID=6.1cm AND OD=7.6cm, AS NOTED. PENETRATION INDEX IS BASED ON USING A 63.6 kg HAMMER WITH A 0.76cm DROP.

DIST	COUNTY	ROUTE	KILOMETER POSTS TOTAL PROJECT	SHEET NO.	TOTAL SHEETS
12	Ora				

REGISTERED CIVIL ENGINEER
PRINCIPAL ENGINEER
2-24-98

PLANS APPROVAL DATE

NINYO & MOORE
9272 JERONIMO RD. STE. 125A
IRVINE, CA 92718

The State of California or its officers or agents shall not be responsible for the accuracy or completeness of electronic copies of this plan sheet.

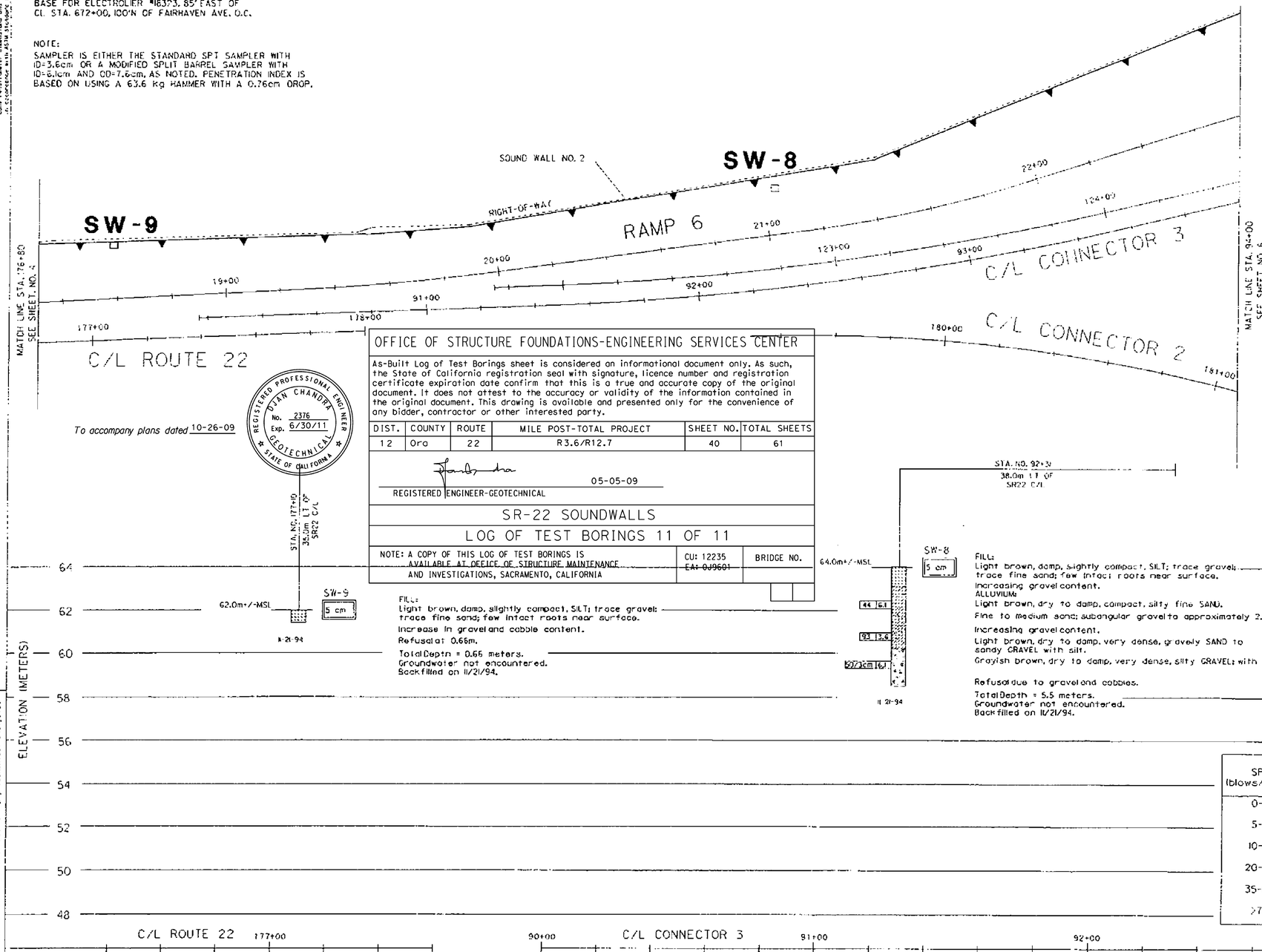

SW-9

FILL:
Light brown, damp, slightly compact, SILT; trace gravel; trace fine sand; few intact roots near surface.
Increase in gravel and cobble content.
Refusal at 0.66m.
Total Depth = 0.66 meters.
Groundwater not encountered.
Backfilled on 11/21/94.

SW-8

FILL:
Light brown, damp, slightly compact, SILT; trace gravel; trace fine sand; few intact roots near surface.
Increasing gravel content.
ALLUVIUM:
Light brown, dry to damp, compact, silty fine SAND.
Fine to medium sand; subangular gravel to approximately 2.5cm diameter.
Increasing gravel content.
Light brown, dry to damp, very dense, gravelly SAND to sandy GRAVEL with silt.
Grayish brown, dry to damp, very dense, silty GRAVEL; with fine sand.
Refusal due to gravel and cobbles.
Total Depth = 5.5 meters.
Groundwater not encountered.
Backfilled on 11/21/94.

SCALE:
PLAN VIEW
METER
SCALE 1:1000
PROFILE
VERTICAL PROFILE 1:100
HORIZONTAL PROFILE 1:1000

OFFICE OF STRUCTURE FOUNDATIONS-ENGINEERING SERVICES CENTER

As-Built Log of Test Borings sheet is considered an informational document only. As such, the State of California registration seal with signature, licence number and registration certificate expiration date confirm that this is a true and accurate copy of the original document. It does not attest to the accuracy or validity of the information contained in the original document. This drawing is available and presented only for the convenience of any bidder, contractor or other interested party.

DIST.	COUNTY	ROUTE	MILE POST-TOTAL PROJECT	SHEET NO.	TOTAL SHEETS
12	Ora	22	R3.6/R12.7	40	61

REGISTERED PROFESSIONAL ENGINEER DUAN CHANDRA No. 2376 Exp. 6/30/11 GEOTECHNICAL STATE OF CALIFORNIA

05-05-09
REGISTERED ENGINEER-GEOTECHNICAL

SR-22 SOUNDWALLS
LOG OF TEST BORINGS 11 OF 11

NOTE: A COPY OF THIS LOG OF TEST BORINGS IS AVAILABLE AT OFFICE OF STRUCTURE MAINTENANCE AND INVESTIGATIONS, SACRAMENTO, CALIFORNIA

CU: 12235
~~EA: 0J9601~~
BRIDGE NO.

To accompany plans dated 10-26-09

SPT (blows/0.3m)	CONSISTENCY OF COHESIONLESS SOILS	CONSISTENCY OF COHESIVE SOILS	MODIFIED SPLIT BARREL (blows/0.3m)
0-4	Very loose	Very soft	0-7
5-9	Loose	Soft	8-18
10-19	Slightly compact	Stiff	19-36
20-34	Compact	Very stiff	37-59
35-69	Dense	Hard	60-110
>70	Very dense	Very hard	>110

R-37

LEGEND OF EARTH MATERIALS

CONSISTENCY CLASSIFICATION FOR SOILS According to the Standard Penetration Test

Penetration Index (Blows/0.3m)	Granular	Cohesive
0-4	Very loose	Very soft
5-9	Loose	Soft
10-19	Slightly compact	Stiff
20-34	Compact	Very stiff
35-69	Dense	Hard
>70	Very dense	Very hard

NOTE: Classification of earth material as shown on this sheet is based upon field construction and is not to be construed to imply mechanical analysis.

DRAWN BY	LR	FIELD INVESTIGATOR	ROB WHEELER, STAFF GEOLOGIST
CHECKED BY	MAS	MONTH, YEAR DATE	NOV. 1994

PREPARED FOR STATE OF:
CALIFORNIA
DEPARTMENT OF TRANSPORTATION

BRIDGE NO. -
KILOMETER POST -

STATE ROUTE 55/22 INTERCHANGE
ORANGE COUNTY, CALIFORNIA
SOUND WALLS AND RETAINING WALLS
LOG OF TEST BORINGS

ORIGINAL SCALE IS IN MILLIMETERS FOR REDUCED PLANS 0 10 20 30

EARLIER REVISION DATES

REVISION DATES (PRELIMINARY STAGE ONLY) SHEET OF

CU 12209 EA 013311

2-24-98

SL19

c0j960ra029.tif

Dist	COUNTY	ROUTE	POST MILES TOTAL PROJECT	SHEET No.	TOTAL SHEETS
12	Ora	22	R3.6/R12.7	41	61

REGISTERED CIVIL ENGINEER 5/5/09 DATE

10-26-09
PLANS APPROVAL DATE

REGISTERED PROFESSIONAL ENGINEER MICHAEL C. HAN No. C61893 Exp. 9/30/11 CIVIL STATE OF CALIFORNIA

THE STATE OF CALIFORNIA OR ITS OFFICERS OR AGENTS SHALL NOT BE RESPONSIBLE FOR THE ACCURACY OR COMPLETENESS OF SCANNED COPIES OF THIS PLAN SHEET.

ORANGE COUNTY TRANSPORTATION AUTHORITY
550 SOUTH MAIN STREET
ORANGE, CA 92863

RMC, INC.
6 HUTTON CENTRE DRIVE
SUITE 1250
SANTA ANA, CA 92707

NOTES:

1. SPLICE NEW 16#14 LOOP WIRES TO EXISTING 8 dlc.
2. CONNECT NEW 3"C TO EXISTING CONDUIT. REUSE EXISTING 8 dlc.
3. RC EXISTING TELEPHONE DEMARCATION CABINET, ABANDONED FOUNDATION.
4. ABANDON EXISTING 3" CONDUIT AND RELOCATE EXISTING 8 dlc IN NEW CONDUIT.

CONDUCTOR AND CONDUIT SCHEDULE

AWG OR CABLE	CONDUCTOR RUN	1	2	3	4	5
dlc	SURVEILLANCE DETECTOR	8	8	8	18	18
	COUNT DETECTOR	-	-	-	-	4
#14	LOOP WIRE	-	8	12	-	-
CONDUIT SIZE		3"	3"	3"	3"	2-3"

ALL CONDUITS AND CONDUCTORS ARE EXISTING.

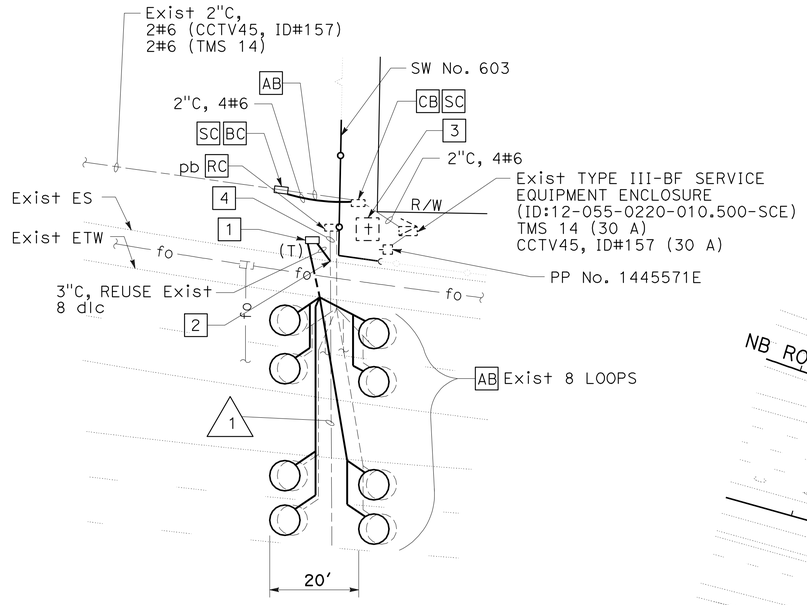

DETAIL A
SCALE: 1" = 20'

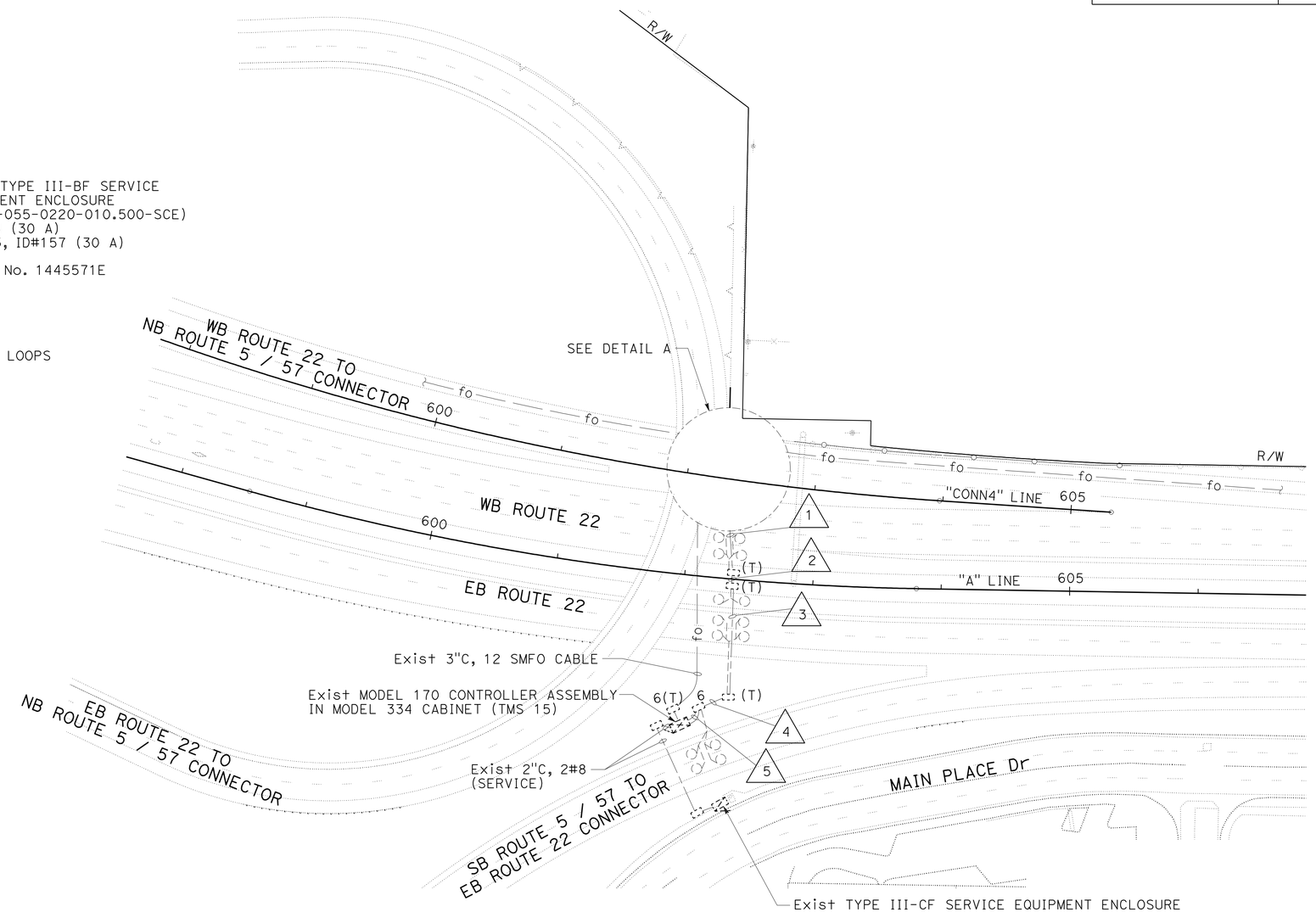

LEGEND:

Exist COMMUNICATION PULL BOX

ABBREVIATIONS:

SMFO SINGLEMODE FIBER OPTIC
SCE SOUTHERN CALIFORNIA EDISON

FOR COMMPLETE RIGHT OF WAY, SEE RIGHT OF WAY RECORDS MAPS AT DISTRICT.

MODIFY TRAFFIC MONITORING STATION

SCALE: 1"=50'

E-1

THIS PLAN IS ACCURATE FOR ELECTRICAL WORK ONLY.

REVISED BY	DATE REVISED
MH	5/5/09

CALCULATED-DESIGNED BY: MICHAEL HAN
CHECKED BY: JOSEPH SAWTELLE
CONSULTANT FUNCTIONAL SUPERVISOR: JAMAL SALMAN

STATE OF CALIFORNIA - DEPARTMENT OF TRANSPORTATION
Caltrans

LAST REVISION 05-05-09
DATE PLOTTED => 02-NOV-2009
TIME PLOTTED => 10:49

DIST	COUNTY	ROUTE	POST MILES TOTAL PROJECT	SHEET NO.	TOTAL SHEETS
12	Ora	22	R3.6/R12.7	42	61

Randell D. Hiatt
REGISTERED CIVIL ENGINEER

June 6, 2008
PLANS APPROVAL DATE

REGISTERED PROFESSIONAL ENGINEER
Randell D. Hiatt
No. C50200
Exp. 6-30-09
CIVIL
STATE OF CALIFORNIA

The State of California or its officers or agents shall not be responsible for the accuracy or completeness of electronic copies of this plan sheet.

To accompany plans dated 10-26-09

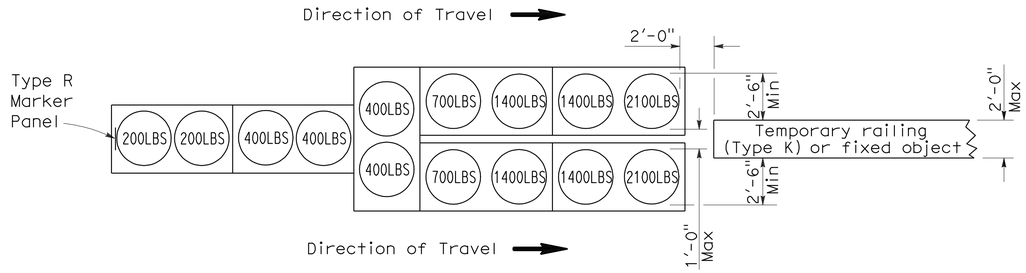

ARRAY 'TU14'

Approach speed 45 mph or more

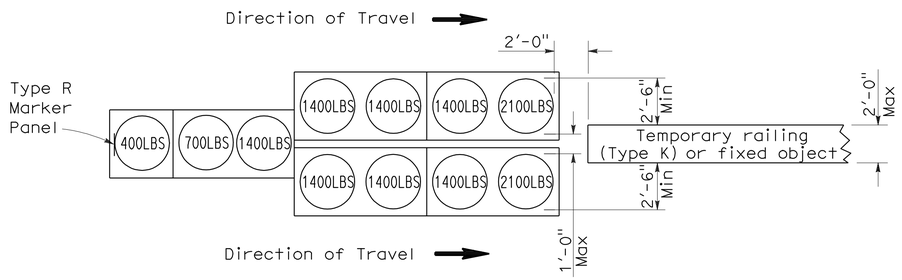

ARRAY 'TU11'

Approach speed less than 45 mph

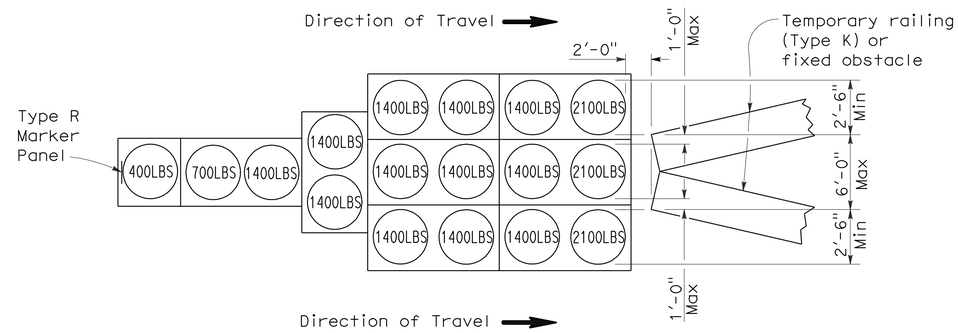

ARRAY 'TU17'

Approach speed less than 45 mph

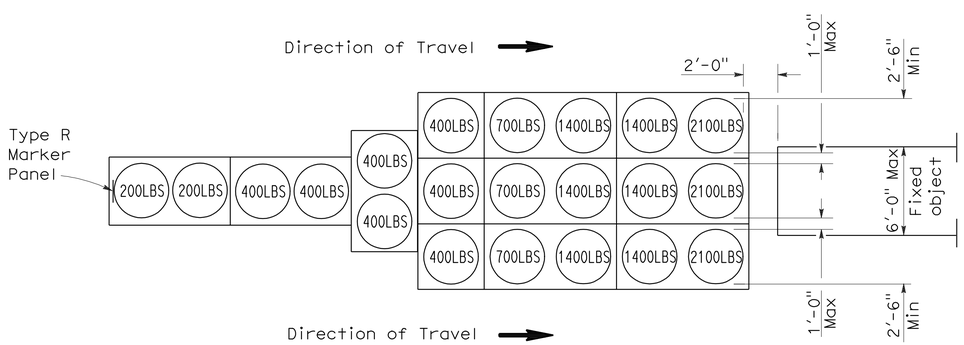

ARRAY 'TU21'

Approach speed 45 mph or more

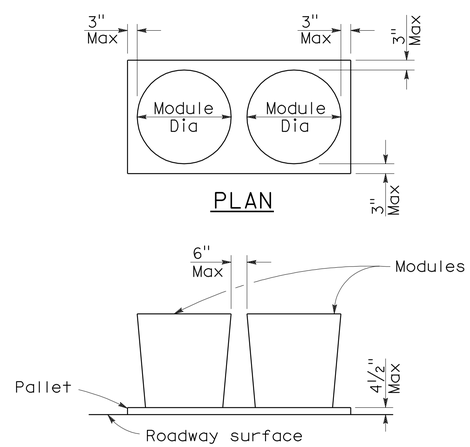

CRASH CUSHION PALLET DETAIL

See Note 7

NOTES:

1. (XXX) Indicates sand filled module location and weight of sand in pounds for each module. Module spacing is based on the greater diameter of the module.
2. All sand weights are nominal.
3. Temporary crash cushion arrays shall not encroach on the traveled way.
4. Place the top of Type R marker panel 1" below the module lid.
5. Refer to Standard Plan A73B for marker details.
6. Approach speeds indicated conform to NCHRP 350 Report criteria.
7. Use of pallets is optional.

STATE OF CALIFORNIA
DEPARTMENT OF TRANSPORTATION

TEMPORARY CRASH CUSHION, SAND FILLED (UNIDIRECTIONAL)

NO SCALE

RSP T1A DATED JUNE 6, 2008 SUPERSEDES STANDARD PLAN T1A
DATED MAY 1, 2006 - PAGE 211 OF THE STANDARD PLANS BOOK DATED MAY 2006.

REVISED STANDARD PLAN RSP T1A

2006 REVISED STANDARD PLAN RSP T1A

5-15-08

DIST	COUNTY	ROUTE	POST MILES TOTAL PROJECT	SHEET NO.	TOTAL SHEETS
12	Ora	22	R3.6/R12.7	43	61

Randell D. Hiatt
REGISTERED CIVIL ENGINEER

June 6, 2008
PLANS APPROVAL DATE

REGISTERED PROFESSIONAL ENGINEER
Randell D. Hiatt
No. C50200
Exp. 6-30-09
CIVIL
STATE OF CALIFORNIA

The State of California or its officers or agents shall not be responsible for the accuracy or completeness of electronic copies of this plan sheet.

To accompany plans dated 10-26-09

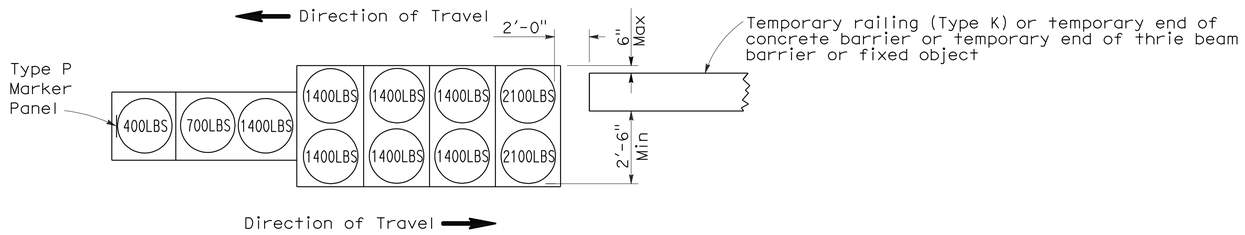

ARRAY 'TB11'

Approach speed less than 45 mph

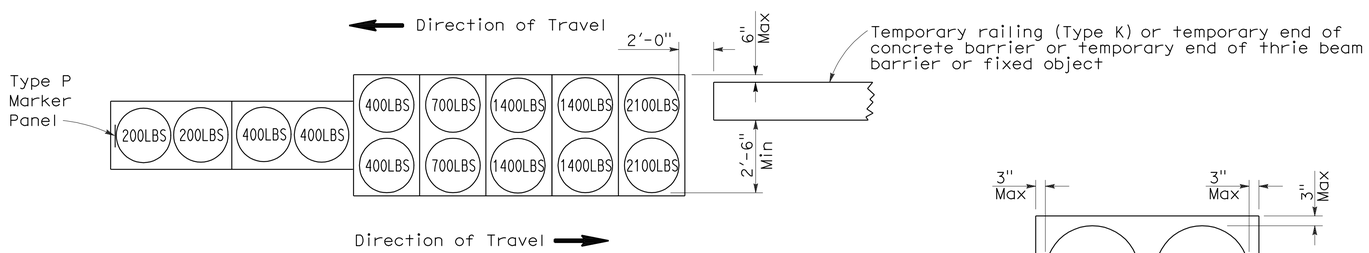

ARRAY 'TB14'

Approach speed 45 mph or more

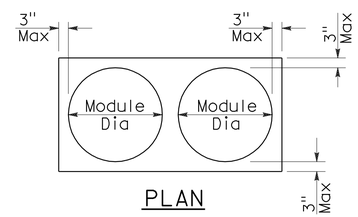

PLAN

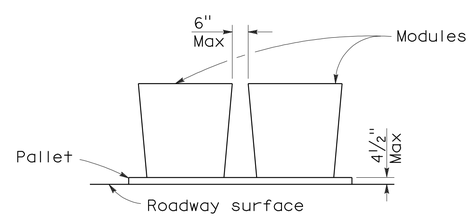

ELEVATION

CRASH CUSHION PALLET DETAIL

See Note 7

NOTES:

1. (XXX) Indicates sand filled module location and weight of sand in pounds for each module. Module spacing is based on the greater diameter of the module.
2. All sand weights are nominal.
3. Temporary crash cushion arrays shall not encroach on the traveled way.
4. Place the Type P marker panel so that the bottom of the panel rests upon the pallet.
5. Refer to Standard Plan A73B for marker details.
6. Approach speeds indicated conform to NCHRP 350 Report criteria.
7. Use of pallets is optional.

STATE OF CALIFORNIA
DEPARTMENT OF TRANSPORTATION

TEMPORARY CRASH CUSHION, SAND FILLED (BIDIRECTIONAL)

NO SCALE

RSP T1B DATED JUNE 6, 2008 SUPERSEDES STANDARD PLAN T1B
DATED MAY 1, 2006 - PAGE 212 OF THE STANDARD PLANS BOOK DATED MAY 2006.

REVISED STANDARD PLAN RSP T1B

2006 REVISED STANDARD PLAN RSP T1B

5-15-08

DIST	COUNTY	ROUTE	POST MILES TOTAL PROJECT	SHEET NO.	TOTAL SHEETS
12	Ora	22	R3.6/R12.7	44	61

Randell D. Hiatt
REGISTERED CIVIL ENGINEER

June 6, 2008
PLANS APPROVAL DATE

REGISTERED PROFESSIONAL ENGINEER
Randell D. Hiatt
No. C50200
Exp. 6-30-09
CIVIL
STATE OF CALIFORNIA

The State of California or its officers or agents shall not be responsible for the accuracy or completeness of electronic copies of this plan sheet.

To accompany plans dated 10-26-09

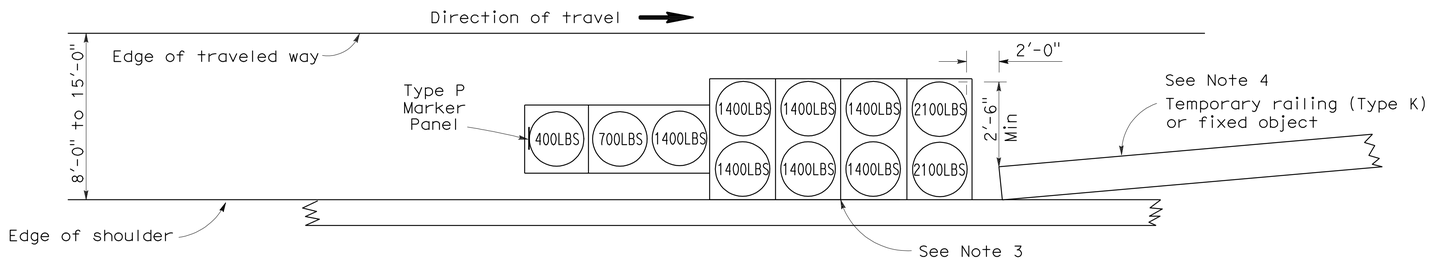

ARRAY 'TS11'

Approach speed less than 45 mph
See Note 9

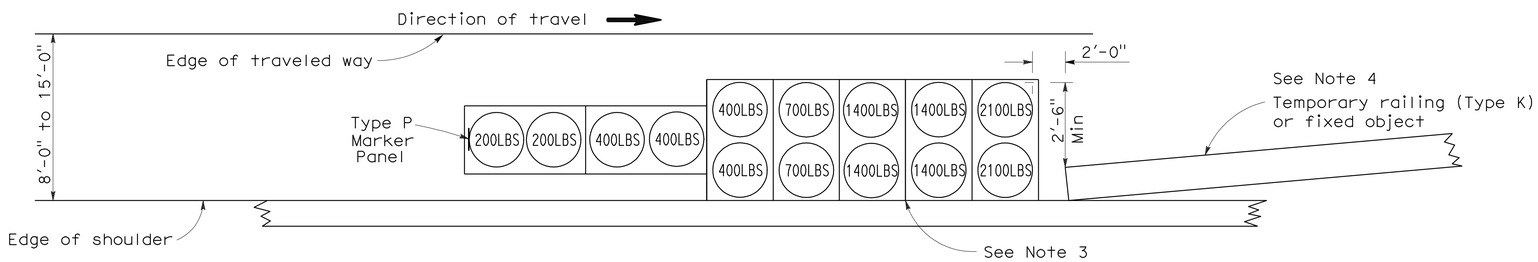

ARRAY 'TS14'

Approach speed 45 mph or more
See Note 9

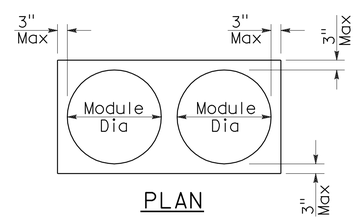

PLAN

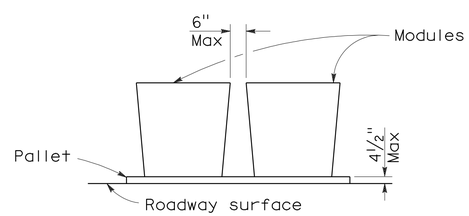

ELEVATION

CRASH CUSHION PALLET DETAIL

See Note 11

NOTES:

1. (XXX) Indicates sand filled module location and weight of sand in pounds for each module. Module spacing is based on the greater diameter of the module.
2. All sand weights are nominal.
3. The temporary crash cushion arrays shown on this plan shall be used only in locations where there will be traffic on one side of the temporary crash cushion array.
4. If the fixed object or approach end of the temporary railing is less than 15'-0" from the edge of traveled way, a temporary crash cushion is required in a construction or work zone.
5. Temporary crash cushion arrays shall not encroach on the traveled way.
6. Arrays for median shoulders shall conform to details shown on this plan for outside shoulders.
7. Place the Type P marker panel so that the bottom of the panel rests upon the pallet and faces traffic.
8. Refer to Standard Plan A73B for marker details.
9. For shoulder widths less than 8'-0", appropriate approved crash cushion protection, other than sand filled modules, shall be provided at fixed objects and at approach ends of temporary railing. The specific type of crash cushion shall be as shown on the project plans or as specified in the Special Provisions, or if not shown on the project plans or specified in the Special Provisions, shall be as approved by the Engineer.
10. Approach speeds indicated conform to NCHRP 350 Report criteria.
11. Use of pallets is optional.

STATE OF CALIFORNIA
DEPARTMENT OF TRANSPORTATION

TEMPORARY CRASH CUSHION, SAND FILLED (SHOULDER INSTALLATIONS)

NO SCALE

RSP T2 DATED JUNE 6, 2008 SUPERSEDES STANDARD PLAN T2
DATED MAY 1, 2006 - PAGE 213 OF THE STANDARD PLANS BOOK DATED MAY 2006.

REVISED STANDARD PLAN RSP T2

2006 REVISED STANDARD PLAN RSP T2

5-15-08

DIST	COUNTY	ROUTE	POST MILES TOTAL PROJECT	SHEET NO.	TOTAL SHEETS
12	Ora	22	R3.6/R12.7	45	61

REGISTERED CIVIL ENGINEER

November 17, 2006
PLANS APPROVAL DATE

REGISTERED PROFESSIONAL ENGINEER
Greg W. Edwards
No. C36386
Exp. 6-30-08
CIVIL
STATE OF CALIFORNIA

The State of California or its officers or agents shall not be responsible for the accuracy or completeness of electronic copies of this plan sheet.

To accompany plans dated 10-26-09

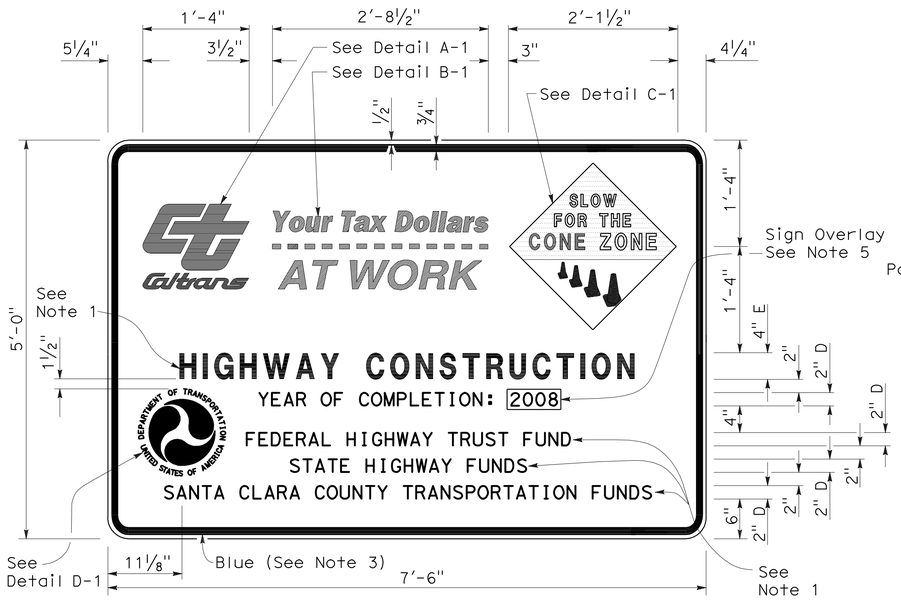

TYPE 1

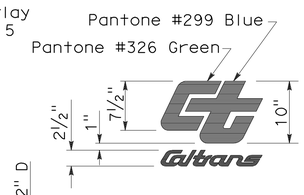

DETAIL A-1

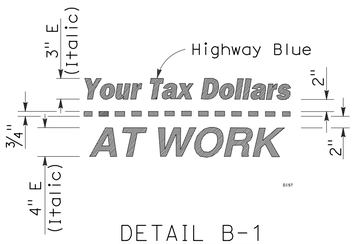

DETAIL B-1
(See Note 3)

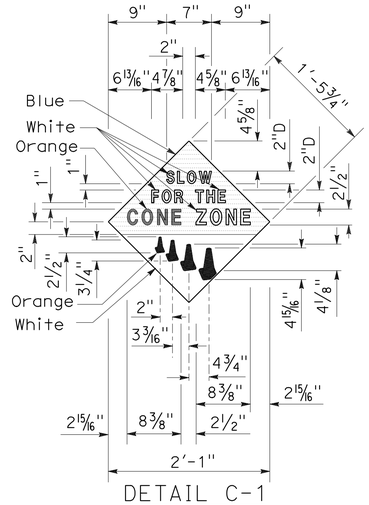

DETAIL C-1
(See Note 4)

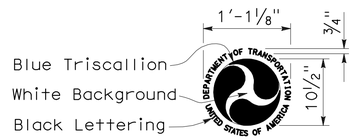

DETAIL D-1
(See Note 6)

NOTES:

1. The sign messages shown for type of project and fund types are examples only. See the Special Provisions for the applicable type of project and fund type messages to be used.
2. Except as otherwise shown, the legend of sign shall be black on a white background (non-reflective).
3. The border of the signs and details "B-1" and "B-2" shall be blue (non-reflective).
4. The diamond in details "C-1" and "C-2" shall be blue for the background of message, " SLOW FOR THE CONE ZONE", and white background for the orange cones. The color and type of font for the "SLOW FOR THE CONE ZONE" message shall be: "SLOW" white D; "FOR THE" white D; "CONE" orange Arial font; "ZONE" white Arial font.
5. Year of completion of project construction shown on the overlay is an example only. See the Special Provisions.
6. Use when the Project involves Federal Highway Trust Fund.

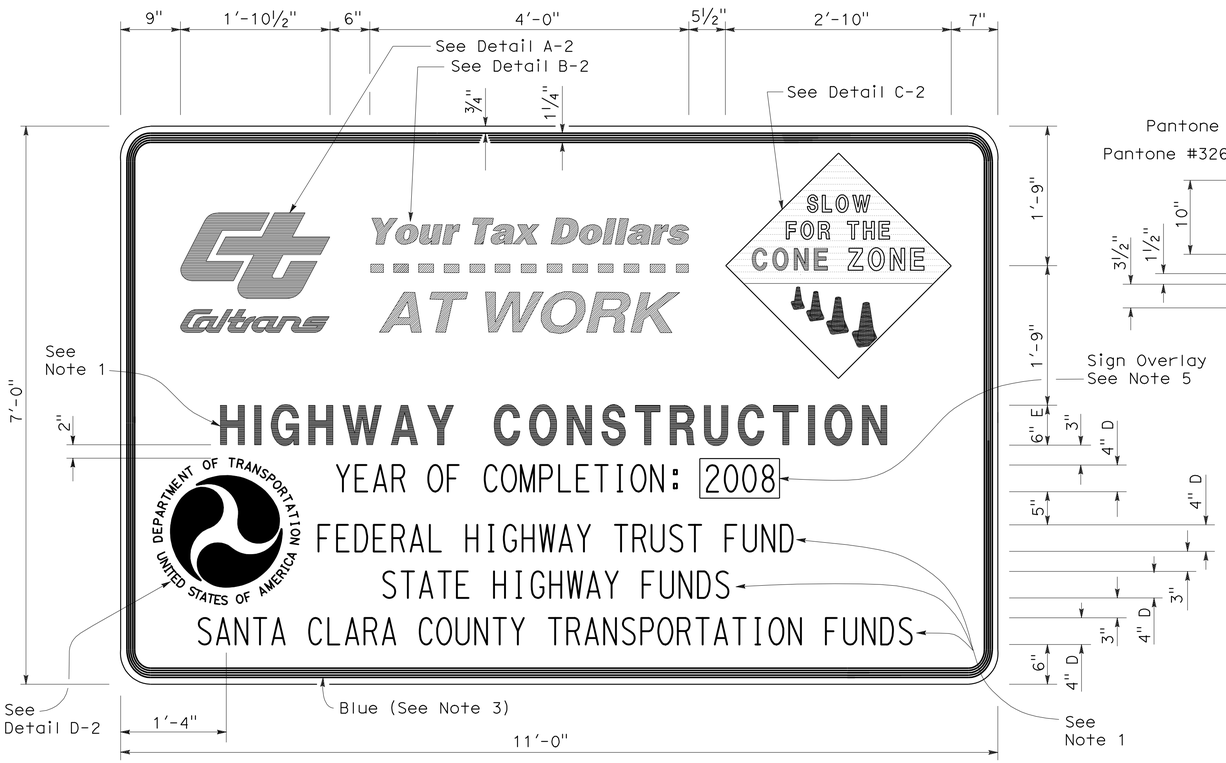

TYPE 2

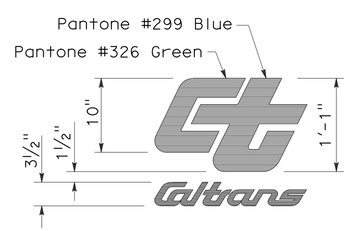

DETAIL A-2

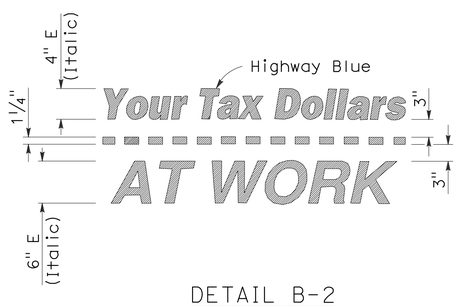

DETAIL B-2
(See Note 3)

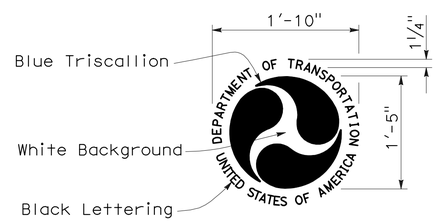

DETAIL D-2
(See Note 6)

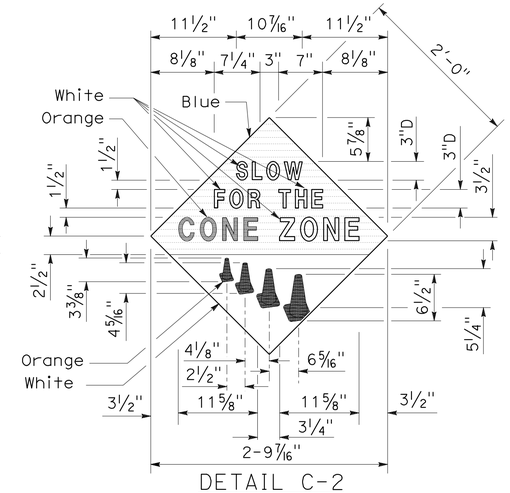

DETAIL C-2
(See Note 4)

STATE OF CALIFORNIA
DEPARTMENT OF TRANSPORTATION

CONSTRUCTION PROJECT FUNDING IDENTIFICATION SIGNS

NO SCALE

RSP T7 DATED NOVEMBER 17, 2006 SUPERSEDES STANDARD PLAN T7
DATED MAY 1, 2006 - PAGE 217 OF THE STANDARD PLANS BOOK DATED MAY 2006.

REVISED STANDARD PLAN RSP T7

2006 REVISED STANDARD PLAN RSP T7

5-15-08

DIST	COUNTY	ROUTE	POST MILES TOTAL PROJECT	SHEET NO.	TOTAL SHEETS
12	Ora	22	R3.6/R12.7	46	61

LICENSED LANDSCAPE ARCHITECT

April 3, 2009
PLANS APPROVAL DATE

LICENSED LANDSCAPE ARCHITECT — Robert B. Schott 3625 — Registered Expires 11-30-10 — Renewal Date 2-25-09 — Date — STATE OF CALIFORNIA

The State of California or its officers or agents shall not be responsible for the accuracy or completeness of electronic copies of this plan sheet.

To accompany plans dated 10-26-09

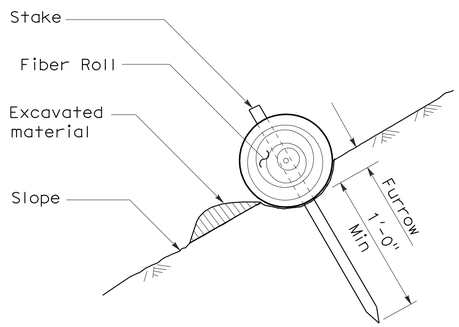

SECTION

TEMPORARY FIBER ROLL (TYPE 1)

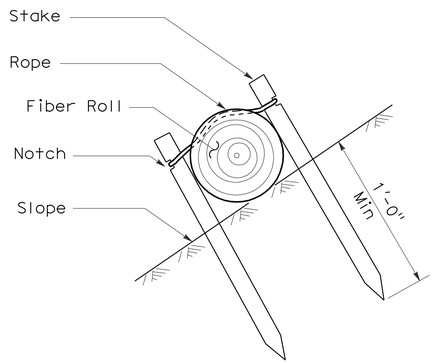

SECTION

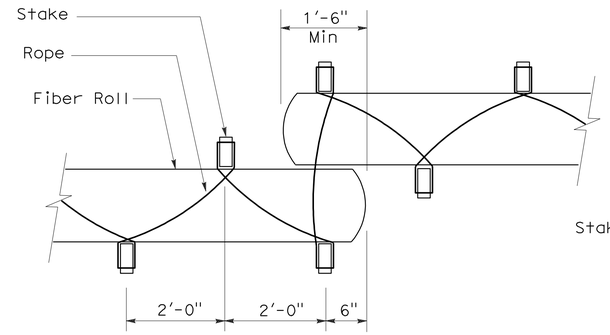

PLAN

TEMPORARY FIBER ROLL (TYPE 2)

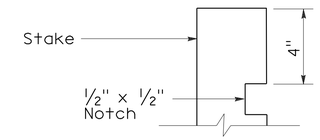

ELEVATION

STAKE NOTCH DETAIL

NOTES:

1. Temporary fiber roll spacing varies depending upon slope inclination.
2. Installations shown in the perspectives are for slope inclination of 10:1 and steeper.

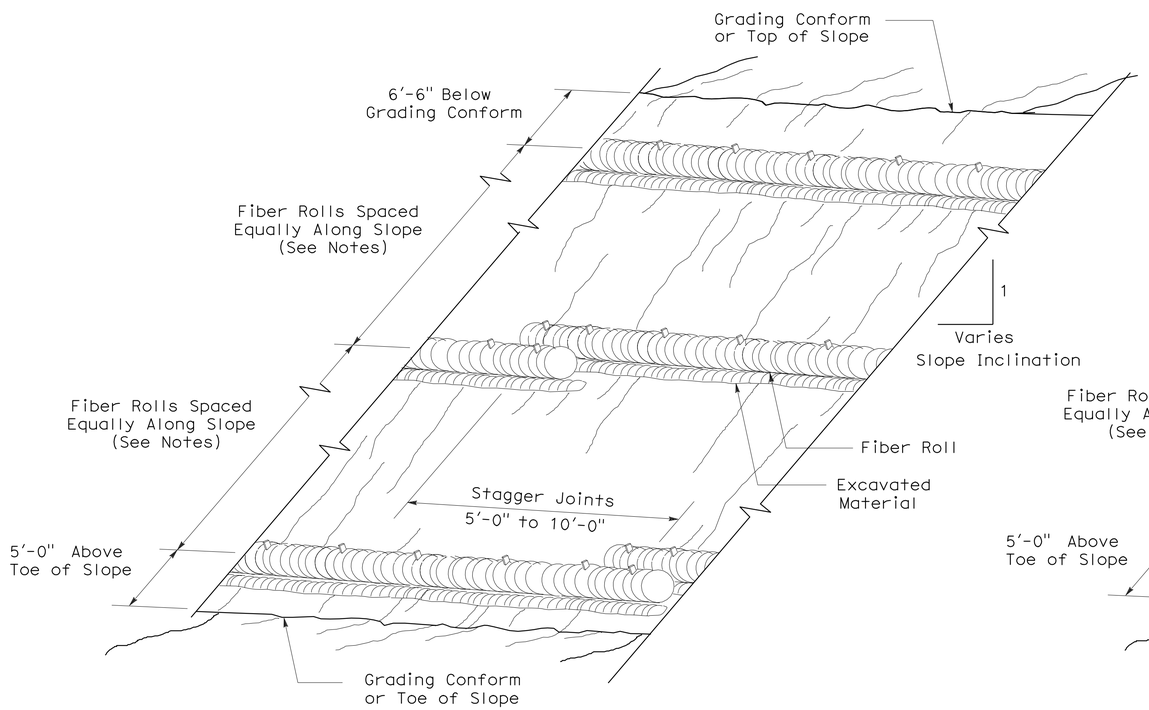

PERSPECTIVE

TEMPORARY FIBER ROLL (TYPE 1)

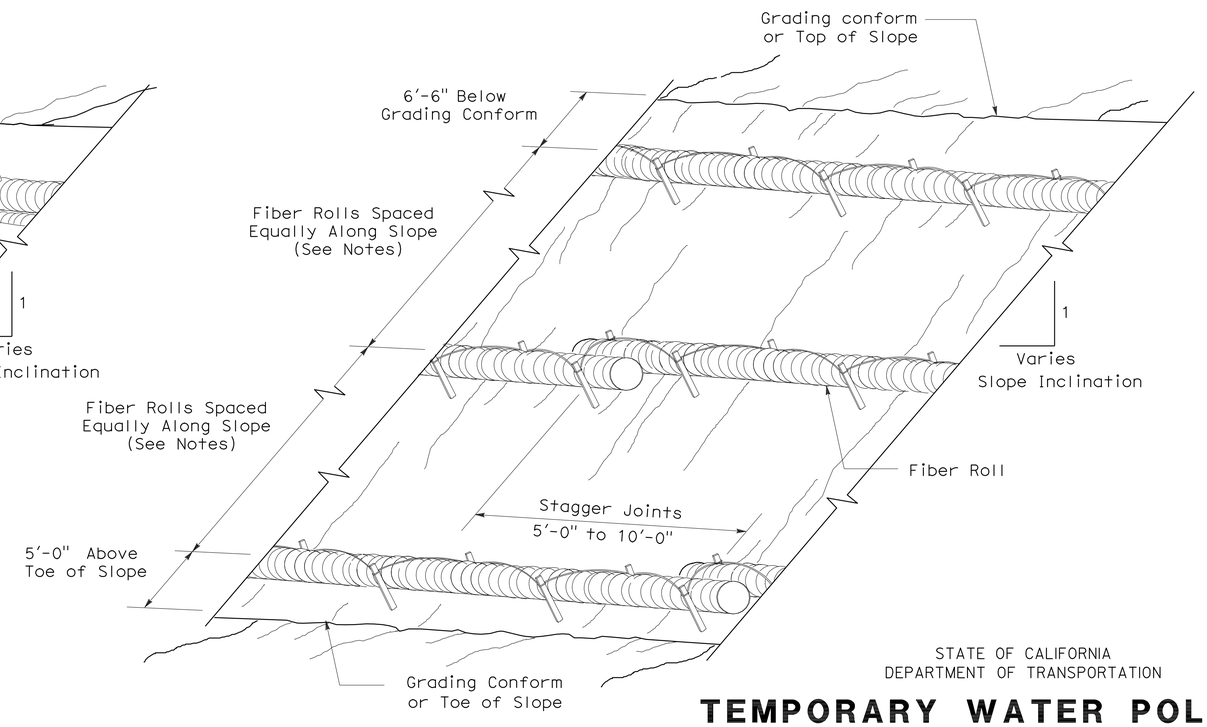

PERSPECTIVE

TEMPORARY FIBER ROLL (TYPE 2)

STATE OF CALIFORNIA
DEPARTMENT OF TRANSPORTATION

TEMPORARY WATER POLLUTION CONTROL DETAILS (TEMPORARY FIBER ROLL)

NO SCALE

RSP T56 DATED APRIL 3, 2009 SUPERSEDES STANDARD PLAN T56
DATED MAY 1, 2006 - PAGE 232 OF THE STANDARD PLANS BOOK DATED MAY 2006.

REVISED STANDARD PLAN RSP T56

2006 REVISED STANDARD PLAN RSP T56

DIST	COUNTY	ROUTE	POST MILES TOTAL PROJECT	SHEET NO.	TOTAL SHEETS
12	Ora	22	R3.6/R12.7	47	61

Robert B Schott
LICENSED LANDSCAPE ARCHITECT

August 15, 2008
PLANS Approval DATE

LICENSED LANDSCAPE ARCHITECT
Robert B. Schott 3625
Robert B Schott
Signature
11-04-08
Renewal Date
08-11-08
Date
STATE OF CALIFORNIA

The State of California or its officers or agents shall not be responsible for the accuracy or completeness of electronic copies of this plan sheet.

To accompany plans dated 10-26-09

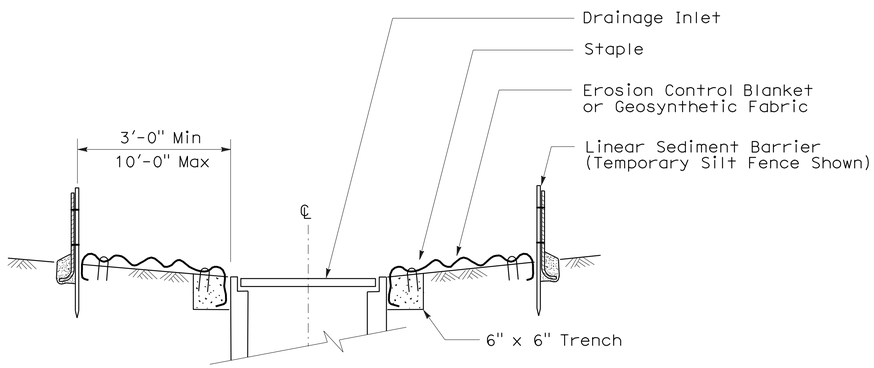

SECTION A-A

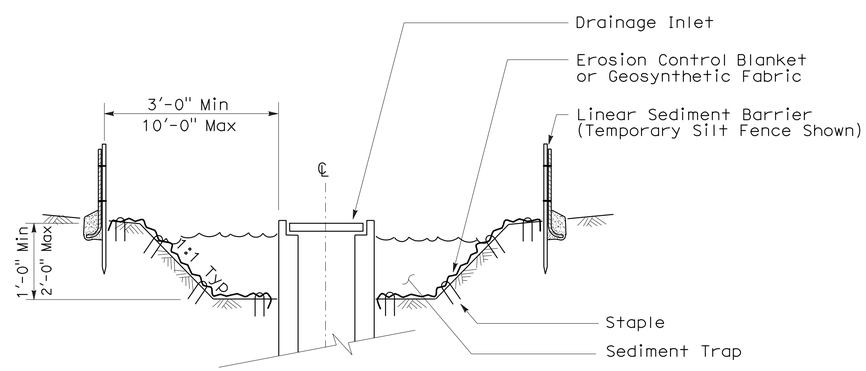

SECTION B-B

NOTES:

1. See Standard Plan T51 for Temporary Silt Fence.
2. Dimensions may vary to fit field conditions.

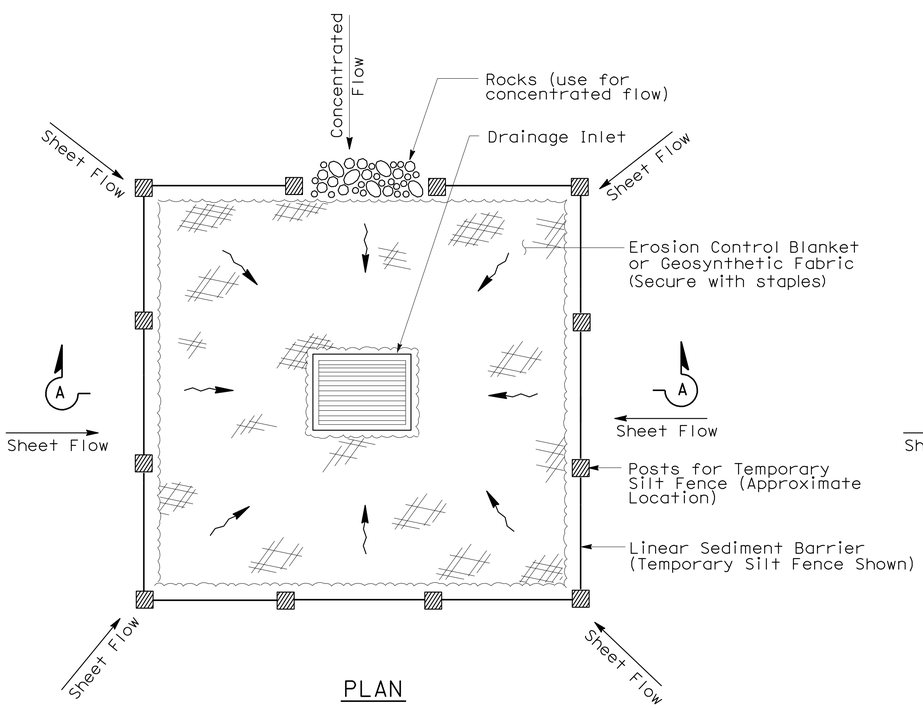

PLAN

TEMPORARY DRAINAGE
INLET PROTECTION (TYPE 1)

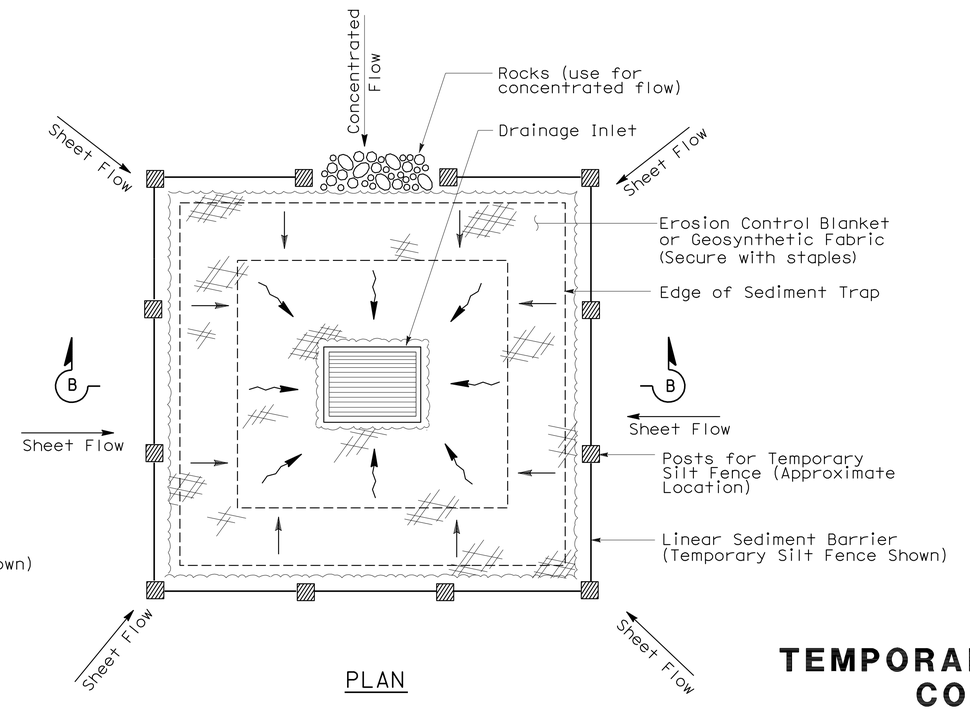

PLAN

TEMPORARY DRAINAGE
INLET PROTECTION (TYPE 2)
(EXCAVATED SEDIMENT TRAP)

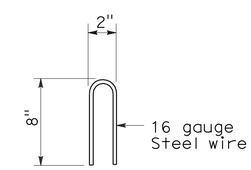

STAPLE DETAIL

STATE OF CALIFORNIA
DEPARTMENT OF TRANSPORTATION

TEMPORARY WATER POLLUTION CONTROL DETAILS (TEMPORARY DRAINAGE INLET PROTECTION)

NO SCALE

NSP T61 DATED AUGUST 15, 2008 SUPPLEMENTS
THE STANDARD PLANS BOOK DATED MAY 2006.

NEW STANDARD PLAN NSP T61

2006 NEW STANDARD PLAN NSP T61

7-11-08

DIST	COUNTY	ROUTE	POST MILES TOTAL PROJECT	SHEET NO.	TOTAL SHEETS
12	Ora	22	R3.6/R12.7	48	61

LICENSED LANDSCAPE ARCHITECT

August 15, 2008
PLANS APPROVAL DATE

LICENSED LANDSCAPE ARCHITECT — Robert B. Schott — Signature — 11-04-08 Renewal Date — 08-11-08 Date — STATE OF CALIFORNIA

The State of California or its officers or agents shall not be responsible for the accuracy or completeness of electronic copies of this plan sheet.

To accompany plans dated 10-26-09

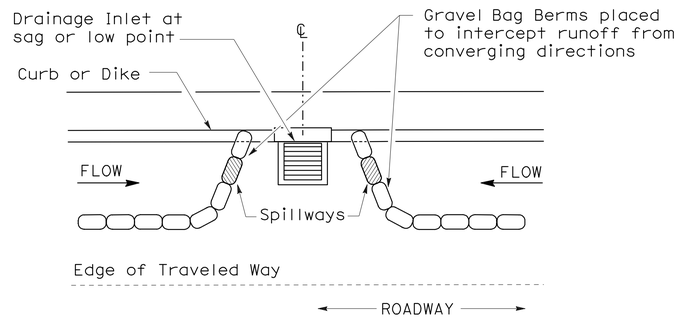

PLAN

CONFIGURATION FOR SAG POINT INLET (GRAVEL BAG BERM)

GRAVEL BAG BERM (TYPE 3A) SPACING TABLE

SLOPE OF ROADWAY (PERCENT)	1 to 3.9	4 to 5.9	6 to 7.9	8 to 10	10+
INTERVAL BETWEEN BERM	100′	75′	50′	25′	12′

For slope of less than 1%, install barriers only if erosion/sediment is prevalent

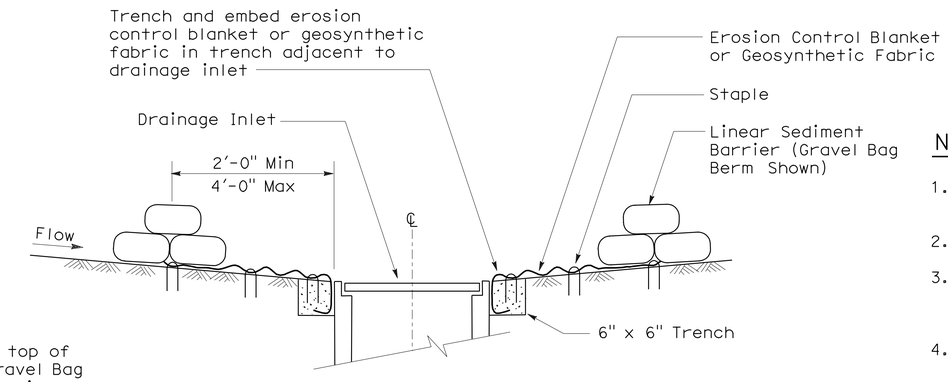

SECTION A-A

NOTES:

1. Place safety cones adjacent to drainage inlet protection.
2. Dimensions may vary to fit field conditions.
3. Install a minimum of 3 gravel bag berms upstream of each drainage inlet to be protected.
4. Position erosion control blanket or geosynthetic fabric at edge of concrete apron and secure in trench.
5. Erosion control blanket or geosynthetic fabric is not required if the area adjacent to the drainage inlet is vegetated or paved.

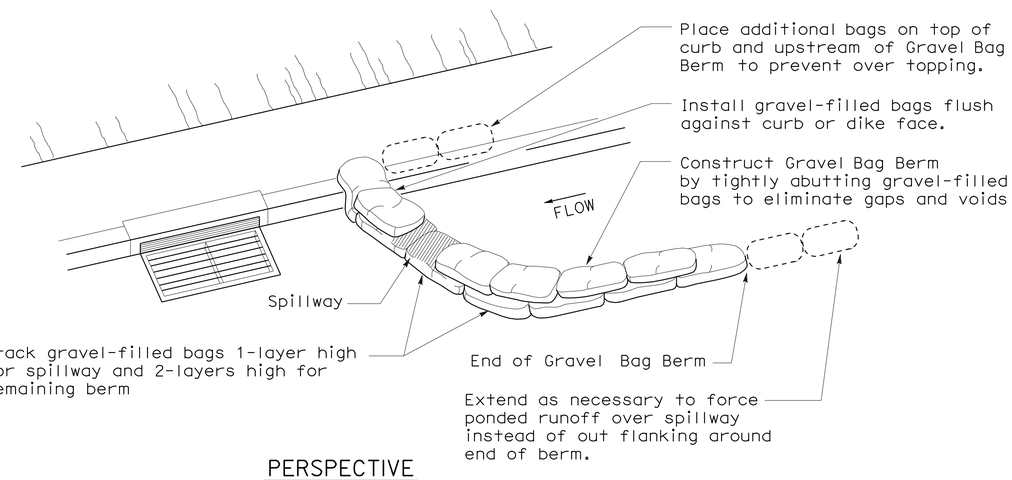

PERSPECTIVE

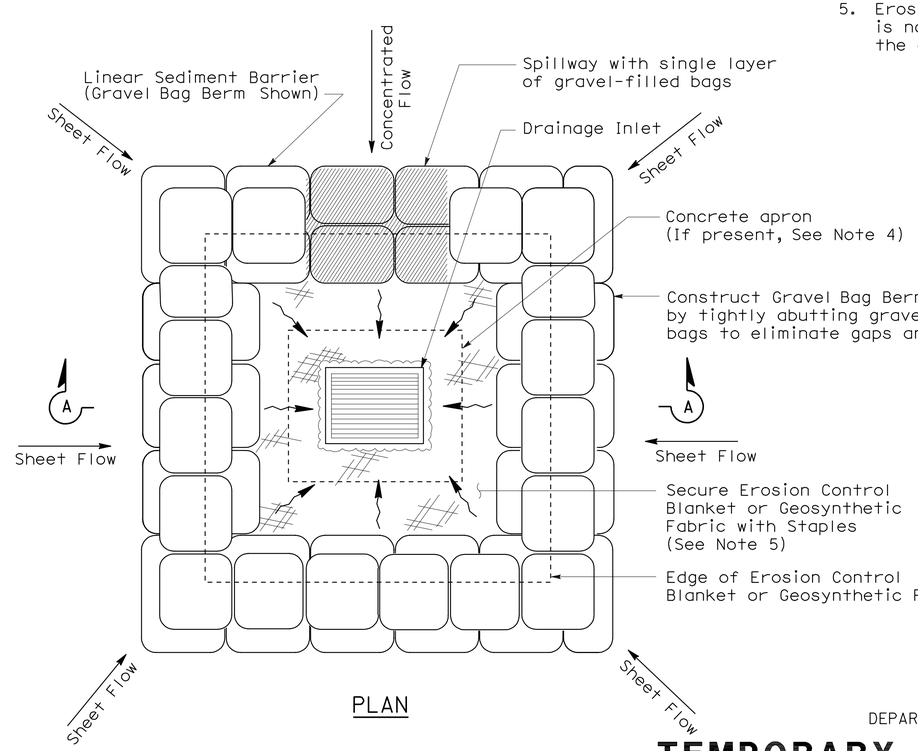

PLAN

TEMPORARY DRAINAGE INLET PROTECTION (TYPE 3B)

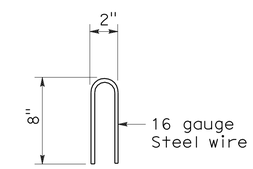

STAPLE DETAIL

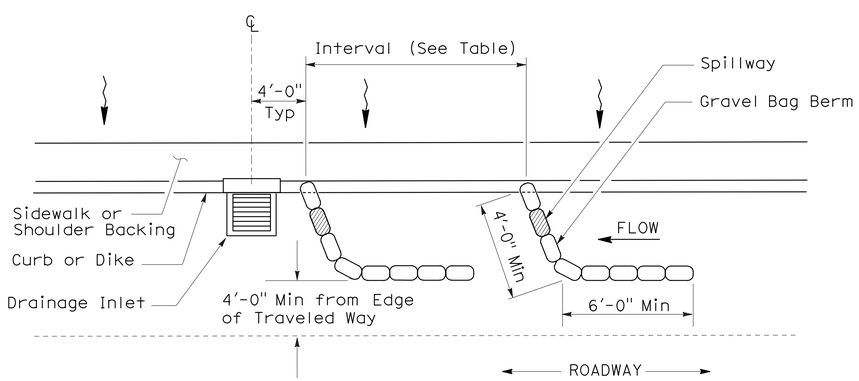

PLAN

TEMPORARY DRAINAGE INLET PROTECTION (TYPE 3A) (GRAVEL BAG BERM)

STATE OF CALIFORNIA
DEPARTMENT OF TRANSPORTATION

TEMPORARY WATER POLLUTION CONTROL DETAILS (TEMPORARY DRAINAGE INLET PROTECTION)

NO SCALE

NSP T62 DATED AUGUST 15, 2008 SUPPLEMENTS THE STANDARD PLANS BOOK DATED MAY 2006.

NEW STANDARD PLAN NSP T62

2006 NEW STANDARD PLAN NSP T62

7-11-08

DIST	COUNTY	ROUTE	POST MILES TOTAL PROJECT	SHEET NO.	TOTAL SHEETS
12	Ora	22	R3.6/R12.7	49	61

LICENSED LANDSCAPE ARCHITECT

August 15, 2008
PLANS APPROVAL DATE

The State of California or its officers or agents shall not be responsible for the accuracy or completeness of electronic copies of this plan sheet.

LICENSED LANDSCAPE ARCHITECT — Robert B. Schott — Signature — 11-04-08 Renewal Date — 08-11-08 Date — STATE OF CALIFORNIA

To accompany plans dated 10-26-09

FLEXIBLE SEDIMENT BARRIER SPACING TABLE

SLOPE OF ROADWAY (PERCENT)	0 to 0.9	1 to 1.9	2 to 2.9	3 to 4	5+
INTERVAL BETWEEN BARRIERS	50′	35′	30′	25′	20′
ANGLE FROM FACE OF CURB	70°	70°	70°	45°	45°
SUGGESTED BARRIER LENGTH	6′	6′	6′	6′	6′

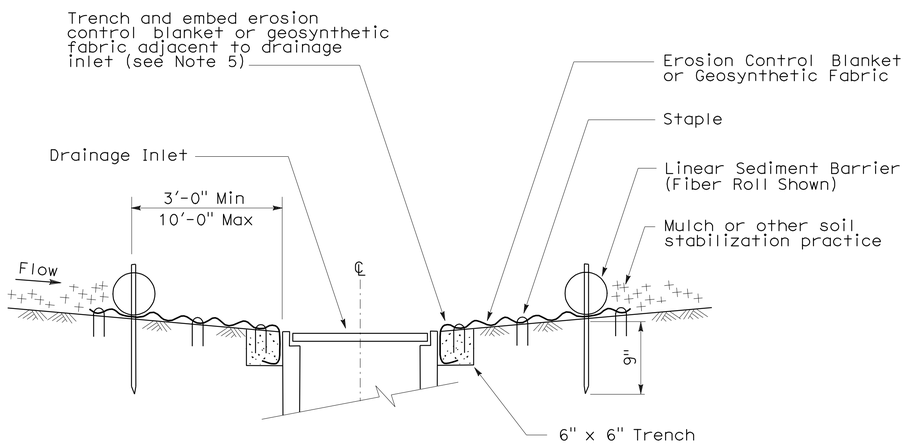

SECTION A-A

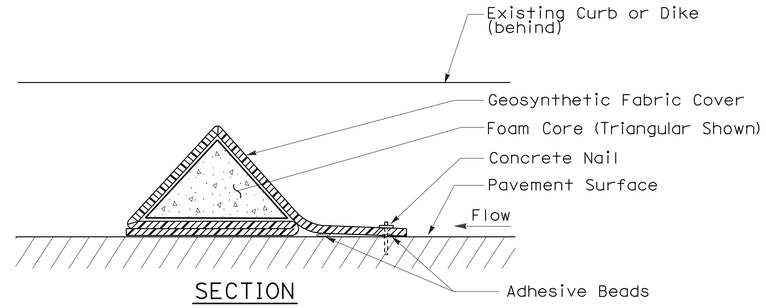

SECTION

FLEXIBLE SEDIMENT BARRIER DETAIL (FOAM BARRIER SHOWN)

NOTES:

1. See Standard Plan T51 for Temporary Silt Fence.
2. Dimensions may vary to fit field conditions.
3. Install a minimum of 3 flexible sediment barriers upstream of each drainage inlet to be protected.
4. Position erosion control blanket or geosynthetic fabric at edge of concrete apron and secure in trench.
5. Erosion control blanket or geosynthetic fabric is not required if the area adjacent to the drainage inlet is vegetated.

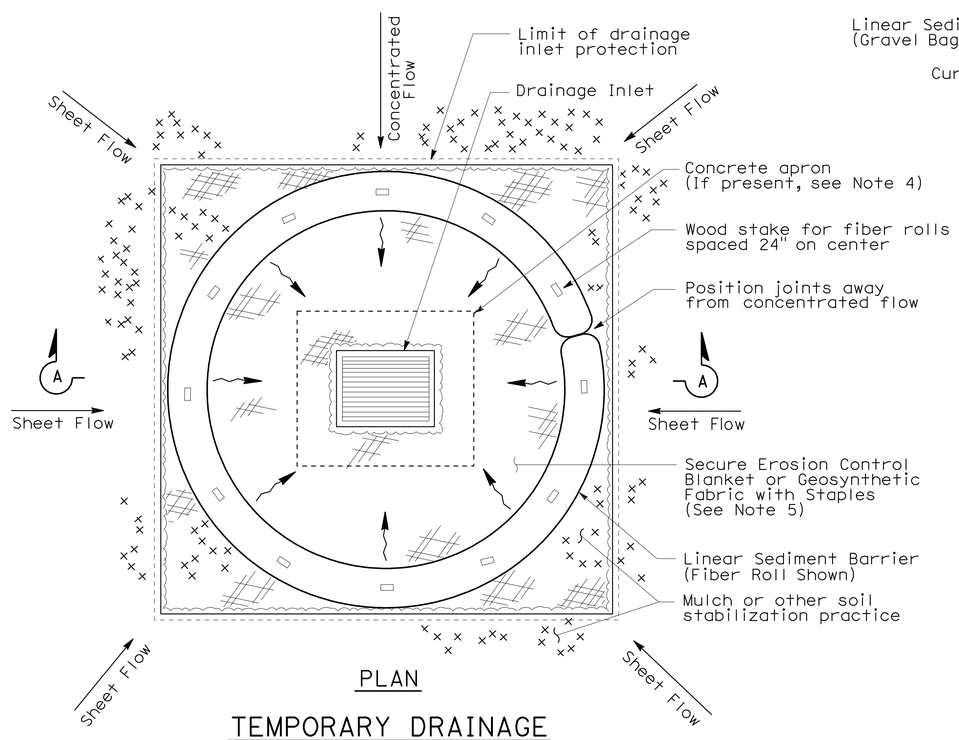

PLAN

TEMPORARY DRAINAGE INLET PROTECTION (TYPE 4A)

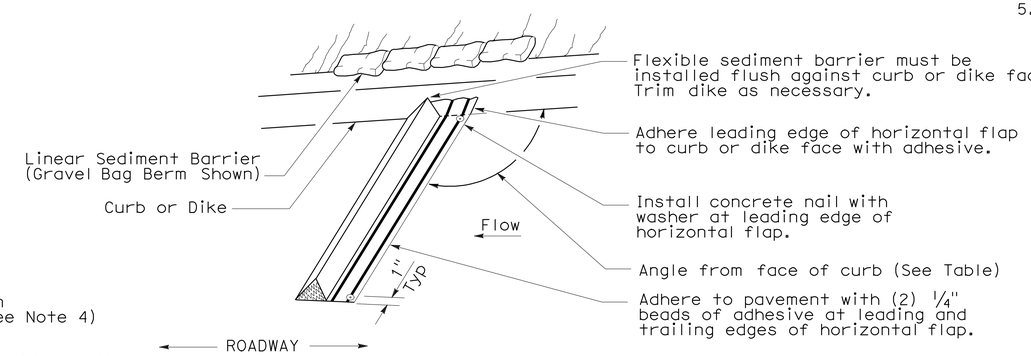

PERSPECTIVE

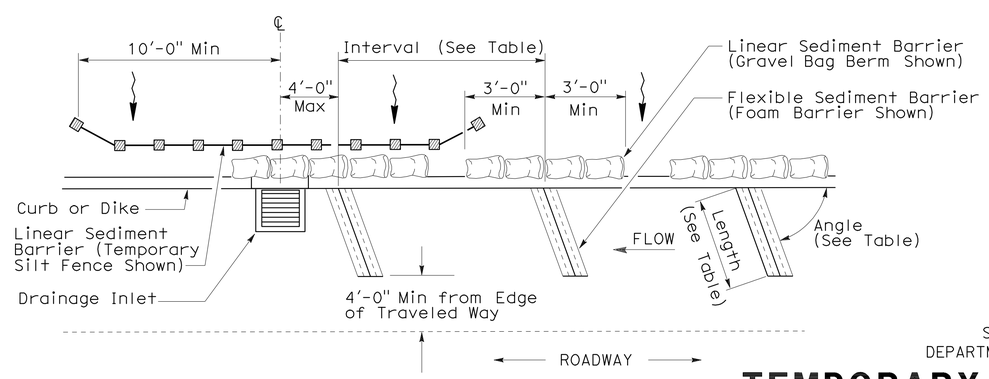

PLAN

TEMPORARY DRAINAGE INLET PROTECTION (TYPE 4B) FLEXIBLE SEDIMENT BARRIER

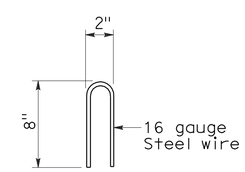

STAPLE DETAIL

STATE OF CALIFORNIA
DEPARTMENT OF TRANSPORTATION

TEMPORARY WATER POLLUTION CONTROL DETAILS (TEMPORARY DRAINAGE INLET PROTECTION)

NO SCALE

NSP T63 DATED AUGUST 15, 2008 SUPPLEMENTS THE STANDARD PLANS BOOK DATED MAY 2006.

NEW STANDARD PLAN NSP T63

2006 NEW STANDARD PLAN NSP T63

DIST	COUNTY	ROUTE	POST MILES TOTAL PROJECT	SHEET NO.	TOTAL SHEETS
12	Ora	22	R3.6/R12.7	50	61

LICENSED LANDSCAPE ARCHITECT

August 15, 2008
PLANS APPROVAL DATE

LICENSED LANDSCAPE ARCHITECT
Robert B. Schott 3625
Signature
11-04-08
Renewal Date
08-11-08
Date
STATE OF CALIFORNIA

The State of California or its officers or agents shall not be responsible for the accuracy or completeness of electronic copies of this plan sheet.

To accompany plans dated 10-26-09

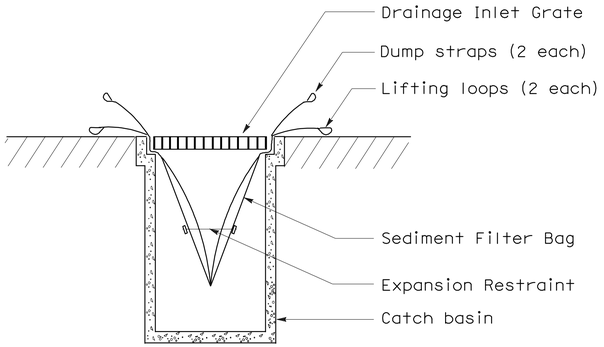

SECTION B-B

SEDIMENT FILTER BAG DETAIL

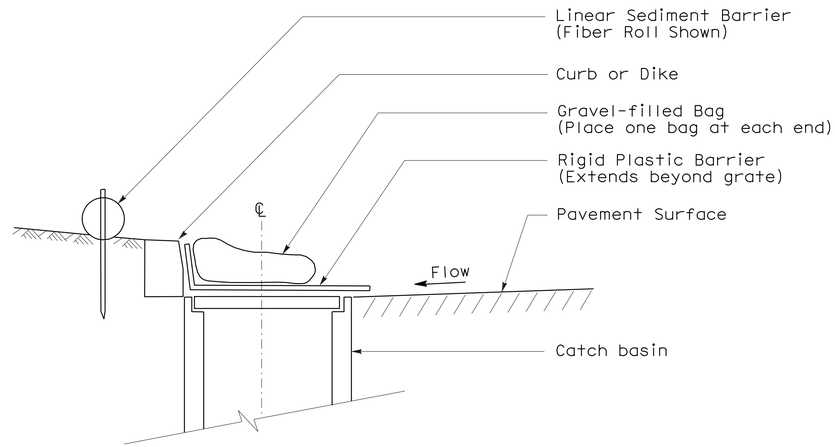

SECTION

TEMPORARY DRAINAGE INLET PROTECTION (TYPE 6A) (CATCH BASIN WITH GRATE)

NOTES:

1. See Standard Plan T51 for Temporary Silt Fence.
2. Dimensions may vary to fit field conditions.

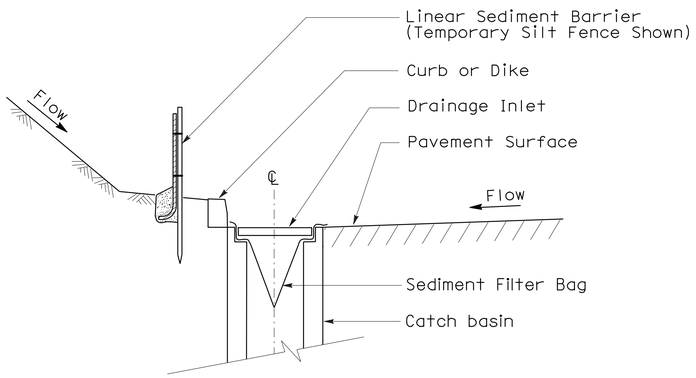

SECTION A-A

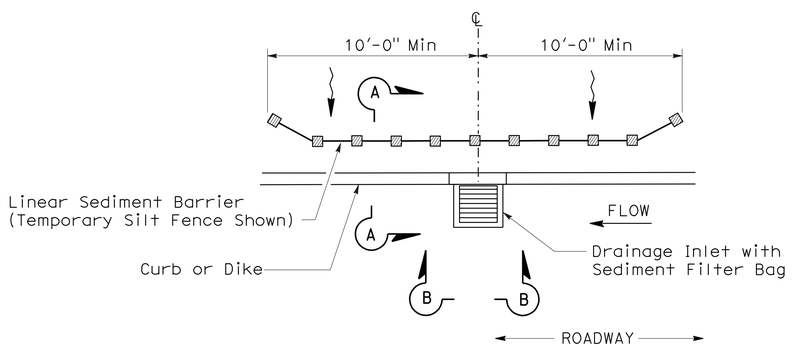

PLAN

TEMPORARY DRAINAGE INLET PROTECTION (TYPE 5) (SEDIMENT FILTER BAG)

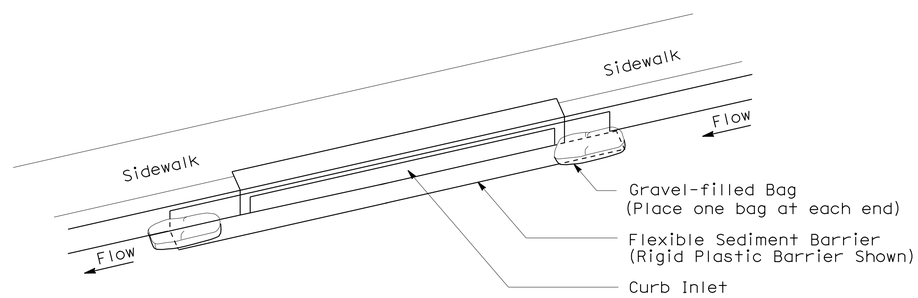

PERSPECTIVE

TEMPORARY DRAINAGE INLET PROTECTION (TYPE 6B) (CURB INLET WITHOUT GRATE)

STATE OF CALIFORNIA
DEPARTMENT OF TRANSPORTATION

TEMPORARY WATER POLLUTION CONTROL DETAILS (TEMPORARY DRAINAGE INLET PROTECTION)

NO SCALE

NSP T64 DATED AUGUST 15, 2008 SUPPLEMENTS
THE STANDARD PLANS BOOK DATED MAY 2006.

NEW STANDARD PLAN NSP T64

2006 NEW STANDARD PLAN NSP T64

7-11-08

DIST	COUNTY	ROUTE	POST MILES TOTAL PROJECT	SHEET NO.	TOTAL SHEETS
12	Ora	22	R3.6/R12.7	51	61

REGISTERED CIVIL ENGINEER

October 5, 2007
PLANS APPROVAL DATE

REGISTERED PROFESSIONAL ENGINEER Douglas J. Dunrud No. C47240 Exp. 12-31-07 CIVIL STATE OF CALIFORNIA

The State of California or its officers or agents shall not be responsible for the accuracy or completeness of electronic copies of this plan sheet.

To accompany plans dated 10-26-09

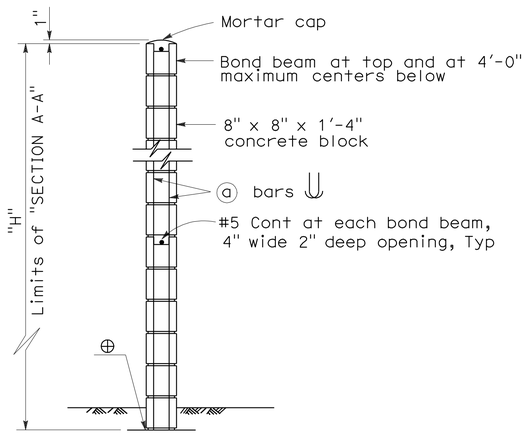

H=6'-0" THRU H=10'-0"

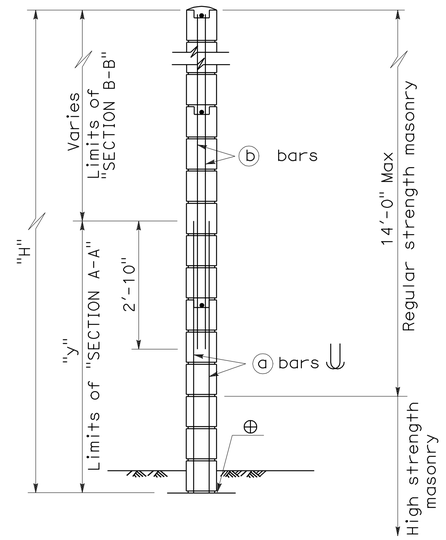

H=12'-0" THRU H=16'-0"

For details not shown, see H=6'-0" thru H=10'-0".

TYPICAL SECTION

⊕ Full mortar bed at bottom of wall

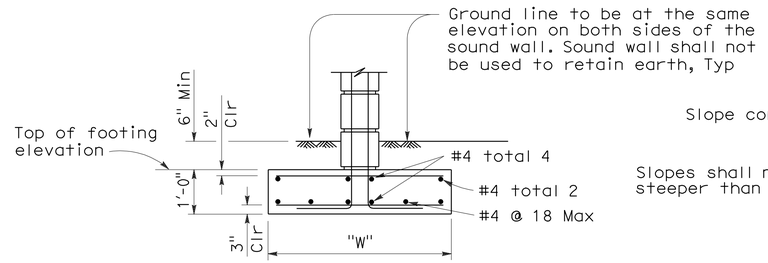

CASE 1

For details not shown, see Case 2. Level ground (±10%) on both sides of the sound wall.

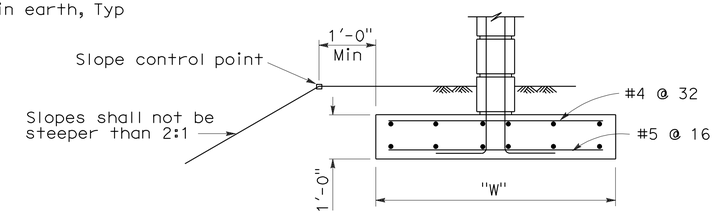

CASE 2

For details not shown, see Case 1. Level ground (±10%) on the traffic side of the sound wall and sloping ground on the opposite side.

SPREAD FOOTING SECTION

TRENCH FOOTING

Maximum H	CASE 1			CASE 2		Maximum H
	Ø = 25 Min	Ø = 30 Min	Ø = 35 Min	Ø = 30 Min	Ø = 35 Min	
	D	D	D	D	D	
6'-0"	5'-0"	4'-3"	3'-6"	6'-6"	5'-0"	6'-0"
8'-0"	6'-0"	5'-0"	4'-3"	7'-9"	6'-0"	8'-0"
10'-0"	6'-9"	5'-9"	5'-0"	8'-9"	6'-9"	10'-0"
12'-0"	7'-9"	6'-6"	5'-6"	9'-9"	7'-9"	12'-0"
14'-0"	8'-6"	7'-3"	6'-0"	10'-9"	8'-6"	14'-0"
16'-0"	9'-3"	7'-9"	6'-6"	11'-9"	9'-3"	16'-0"

Case 1 - Level ground (±10%) on both sides of the sound wall.

Case 2 - Level ground (±10%) on traffic side of the sound wall and sloping ground on opposite side.

SOUND WALL REINFORCEMENT TABLE

Maximum H	ⓐ bars @ 1'-4" Max	ⓑ bars @ 1'-4" Max	"y"	f'm (psi)	Compressive Strength of CMU (psi)	Maximum H
6'-0"	#4	———	———	1500	1900	6'-0"
8'-0"	#4	———	———	1500	1900	8'-0"
10'-0"	#4	———	———	1500	1900	10'-0"
12'-0"	#5	#4	6'-0"	1500	1900	12'-0"
14'-0"	#6	#4	8'-0"	1500	1900	14'-0"
16'-0"	#6	#4	10'-0"	2000	2800	16'-0"

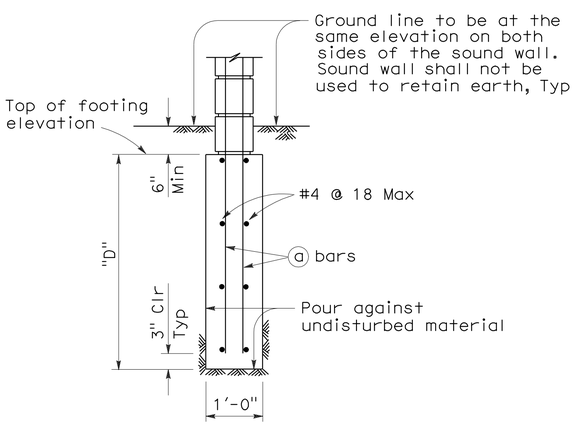

CASE 1

For details not shown, see Case 2. Level ground (±10%) on both sides of the sound wall.

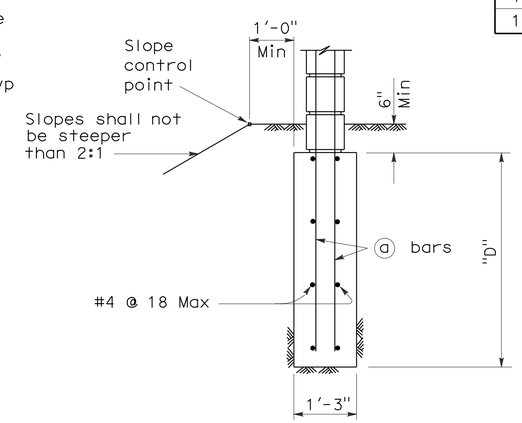

CASE 2

For details not shown, see Case 1. Level ground (±10%) on one side of the sound wall and sloping ground on the opposite side.

TRENCH FOOTING SECTION

SPREAD FOOTING

Maximum H	W
6'-0"	3'-0"
8'-0"	4'-0"
10'-0"	5'-0"
12'-0"	5'-9"
14'-0"	6'-6"
16'-0"	7'-6"

GENERAL NOTES:

A. For type of block and joint finish, see other sheets.

B. When blocks are laid in stacked bond, ladder type, galvanized joint reinforcement shall be provided. A minimum of 2-9 gauge wires continuous at 4'-0" maximum to be used. Locate reinforcement in joints that are at the approximate midpoint between bond and beams.

C. Horizontal joints shall be tooled concave or may be weathered. Vertical joints shall be tooled concave or may be raked.

D. For intermediate wall heights that are between the "H's" given, use the tabular information for the next higher "H".

E. Masonry strengths are listed in the "SOUND WALL REINFORCEMENT TABLE".

STATE OF CALIFORNIA
DEPARTMENT OF TRANSPORTATION

SOUND WALL MASONRY BLOCK ON FOOTING DETAILS (1)

NO SCALE

RSP B15-1 DATED OCTOBER 5, 2007 SUPERSEDES STANDARD PLAN B15-1 DATED MAY 1, 2006 - PAGE 291 OF THE STANDARD PLANS BOOK DATED MAY 2006.

REVISED STANDARD PLAN RSP B15-1

2006 REVISED STANDARD PLAN RSP B15-1

7-11-07

DIST	COUNTY	ROUTE	POST MILES TOTAL PROJECT	SHEET NO.	TOTAL SHEETS
12	Ora	22	R3.6/R12.7	52	61

REGISTERED CIVIL ENGINEER

October 5, 2007
PLANS APPROVAL DATE

REGISTERED PROFESSIONAL ENGINEER
Douglas J. Dunrud
No. C47240
Exp. 12-31-07
CIVIL
STATE OF CALIFORNIA

The State of California or its officers or agents shall not be responsible for the accuracy or completeness of electronic copies of this plan sheet.

To accompany plans dated 10-26-09

GENERAL NOTES:

A. For type of block and joint finish, see other sheets.

B. When blocks are laid in stacked bond, ladder type, galvanized joint reinforcement shall be provided. A minimum of 2-9 gauge wires continuous at 4'-0" maximum to be used. Locate reinforcement in joints that are at the approximate midpoint between bond beams.

C. Horizontal joints shall be tooled concave or may be weathered. Vertical joints shall be tooled concave or may be raked.

D. For intermediate wall heights that are between the "H's" given, use the tabular information for the next higher "H".

E. Masonry strengths are listed in the "SOUND WALL REINFORCEMENT TABLE". See Standard Plan B15-3.

DESIGN NOTES:

DESIGN

Uniform Building Code, 1997 Edition
and the Bridge Design Specifications.

DESIGN WIND LOAD

20 psf

DESIGN SEISMIC LOAD

0.57 Dead load

REINFORCED CONCRETE

f'c = 3.6 ksi
fy = 60 ksi

CONCRETE MASONRY

REGULAR STRENGTH	HIGH STRENGTH	
f'm = 1500 psi	f'm = 2000 psi	f'm = 2500 psi
fb = 495 psi	fb = 660 psi	fb = 830 psi
fs = 24,000 psi	fs = 24,000 psi	fs = 24,000 psi
n = 25.8	n = 19.3	n = 15.5

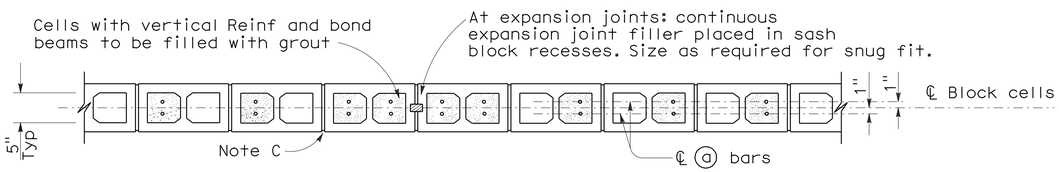

SECTION A-A

For details not shown, see other sections.

H=6'-0" THRU H=10'-0"

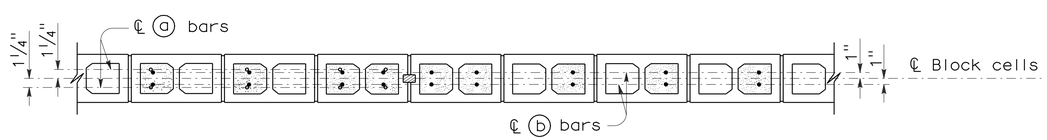

SECTION A-A SECTION B-B

For details not shown, see other sections.

H=12'-0" THRU H=16'-0"

STATE OF CALIFORNIA
DEPARTMENT OF TRANSPORTATION

SOUND WALL MASONRY BLOCK ON PILE CAP DETAILS (2)

NO SCALE

RSP B15-4 DATED OCTOBER 5, 2007 SUPERSEDES STANDARD PLAN B15-4
DATED MAY 1, 2006 - PAGE 294 OF THE STANDARD PLANS BOOK DATED MAY 2006.

REVISED STANDARD PLAN RSP B15-4

2006 REVISED STANDARD PLAN RSP B15-4

7-5-07

DIST	COUNTY	ROUTE	POST MILES TOTAL PROJECT	SHEET NO.	TOTAL SHEETS
12	Ora	22	R3.6/R12.7	53	61

REGISTERED CIVIL ENGINEER

October 5, 2007
PLANS APPROVAL DATE

REGISTERED PROFESSIONAL ENGINEER
Douglas J. Dunrud
No. C47240
Exp. 12-31-07
CIVIL
STATE OF CALIFORNIA

The State of California or its officers or agents shall not be responsible for the accuracy or completeness of electronic copies of this plan sheet.

To accompany plans dated 10-26-09

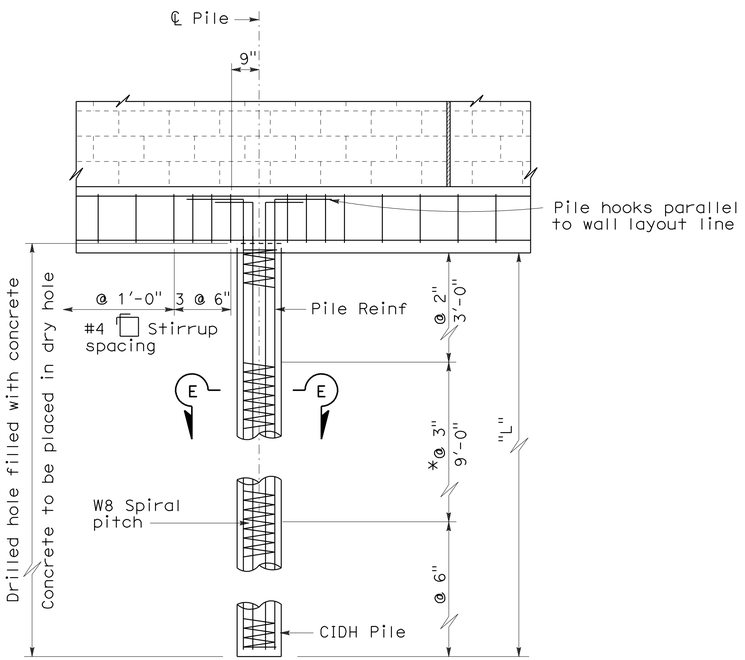

DETAIL D

* @ 2" at option of Contractor

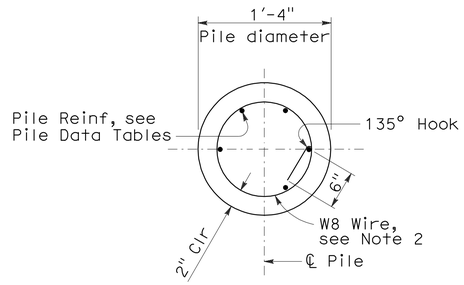

SECTION E-E

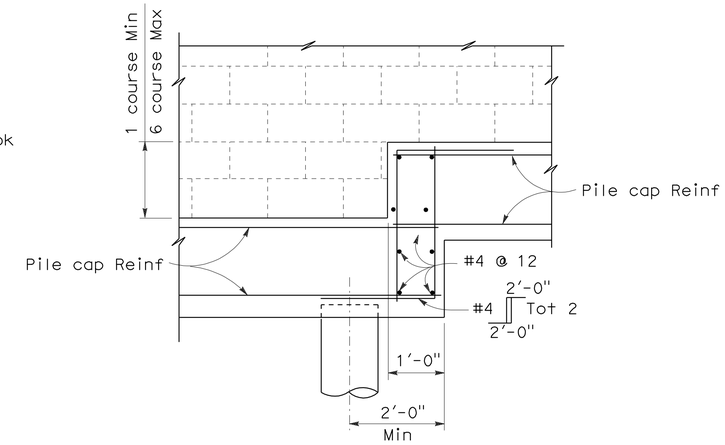

PILE CAP STEP DETAIL

NOTES:

1. For details not shown, see Standard Plan B15-3 and Revised Standard Plan RSP B15-4.
2. Lapped splices in spiral reinforcement shall be lapped at least 80 wire diameters. Spiral reinforcement at splices and at ends shall be terminated with a 135° hook with a 6" tail hooked around a longitudinal bar.

CASE 1 - PILE DATA TABLE

Maximum H	ø = 25 Min			ø = 30 Min			ø = 35 Min			Maximum H
	S	L	Pile Reinf	S	L	Pile Reinf	S	L	Pile Reinf	
6'-0"	16'-0"	7'-0"	#6 Tot 6	16'-0"	5'-6"	#6 Tot 6	16'-0"	4'-6"	#6 Tot 6	6'-0"
8'-0"	16'-0"	8'-6"	#6 Tot 7	16'-0"	7'-0"	#6 Tot 7	16'-0"	5'-6"	#6 Tot 7	8'-0"
10'-0"	16'-0"	10'-0"	#7 Tot 6	16'-0"	8'-0"	#7 Tot 6	16'-0"	6'-6"	#7 Tot 6	10'-0"
12'-0"	15'-0"	11'-6"	#8 Tot 7	16'-0"	9'-6"	#8 Tot 7	16'-0"	7'-6"	#8 Tot 7	12'-0"
14'-0"	13'-0"	11'-6"	#8 Tot 7	14'-0"	10'-0"	#8 Tot 7	14'-0"	8'-0"	#8 Tot 7	14'-0"
16'-0"	12'-0"	12'-0"	#8 Tot 7	13'-0"	10'-6"	#8 Tot 7	13'-0"	8'-6"	#8 Tot 7	16'-0"

Case 1 - Level ground (±10%) on both sides of the sound wall.

CASE 2 - PILE DATA TABLE

Maximum H	ø = 30 Min			ø = 35 Min			Maximum H
	S	L	Pile Reinf	S	L	Pile Reinf	
6'-0"	16'-0"	11'-6"	#8 Tot 7	16'-0"	8'-6"	#6 Tot 7	6'-0"
8'-0"	16'-0"	14'-0"	#8 Tot 7	16'-0"	10'-6"	#7 Tot 6	8'-0"
10'-0"	15'-0"	16'-0"	#8 Tot 7	16'-0"	12'-0"	#7 Tot 7	10'-0"
12'-0"	12'-0"	16'-0"	#8 Tot 7	15'-0"	13'-6"	#8 Tot 7	12'-0"
14'-0"	10'-0"	16'-0"	#8 Tot 7	12'-0"	13'-6"	#8 Tot 7	14'-0"
16'-0"	8'-0"	16'-0"	#8 Tot 7	11'-0"	14'-0"	#8 Tot 7	16'-0"

Case 2 - Level ground (±10%) on traffic side of the sound wall and sloping ground on opposite side.

STATE OF CALIFORNIA
DEPARTMENT OF TRANSPORTATION

SOUND WALL MASONRY BLOCK ON PILE CAP DETAILS (3)

NO SCALE

RSP B15-5 DATED OCTOBER 5, 2007 SUPERSEDES STANDARD PLAN B15-5
DATED MAY 1, 2006 - PAGE 295 OF THE STANDARD PLANS BOOK DATED MAY 2006.

REVISED STANDARD PLAN RSP B15-5

2006 REVISED STANDARD PLAN RSP B15-5

DIST	COUNTY	ROUTE	POST MILES TOTAL PROJECT	SHEET NO.	TOTAL SHEETS
12	Ora	22	R3.6/R12.7	54	61

REGISTERED CIVIL ENGINEER

June 5, 2009
PLANS APPROVAL DATE

REGISTERED PROFESSIONAL ENGINEER
Tillat satter
No. C42892
Exp. 03-31-10
CIVIL
STATE OF CALIFORNIA

The State of California or its officers or agents shall not be responsible for the accuracy or completeness of electronic copies of this plan sheet.

To accompany plans dated 10-26-09

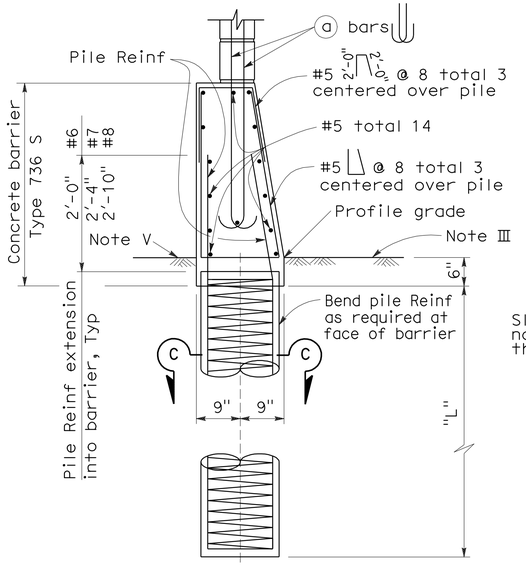

CASE 1

For details not shown, See Case 2.
Level ground ±10% on both sides of barrier.

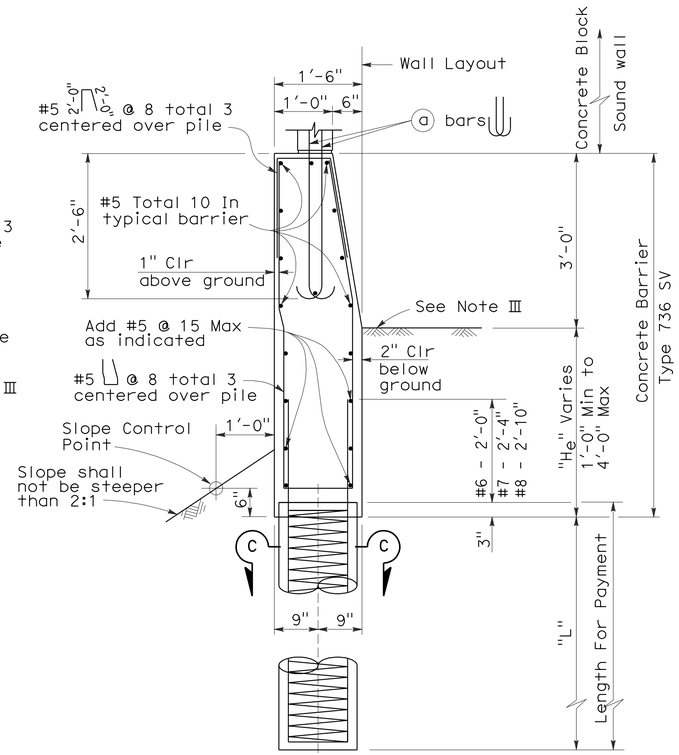

CASE 2

For details not shown, See Case 1.
Level ground ±10% at the traffic side of barrier and sloping ground on the opposite side.

BARRIER SECTIONS

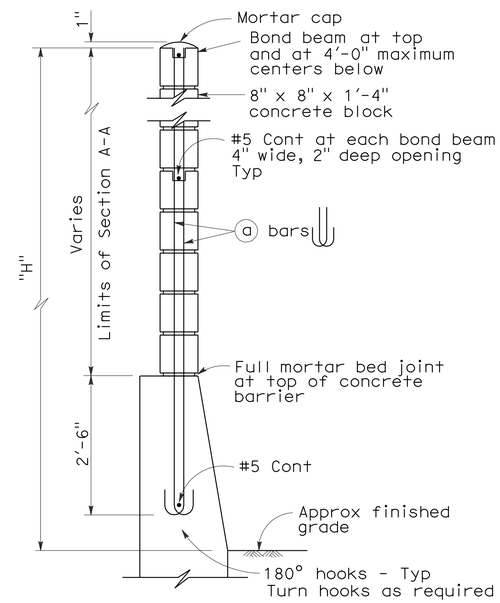

H=6'-4" THRU H=10'-4"

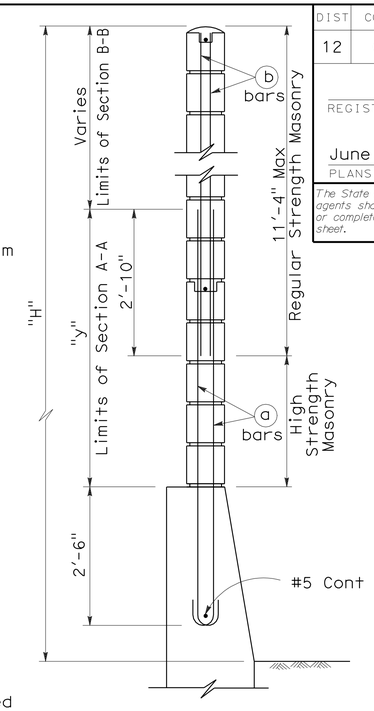

H=12'-4" THRU H=16'-4"

For details not shown, see H=6'-4" thru H=10'-4".

TYPICAL SECTIONS

See Revised Standard Plan RSP B15-8 for pile details.

SOUND WALL REINFORCEMENT TABLE

Maximum H	ⓐ bars @ 1'-4" Max	ⓑ bars @ 1'-4" Max	"y"	f'm (psi)	Compressive Strength of CMU (psi)	H
6'-4"	#4	---	---	1500	1900	6'-4"
8'-4"	#4	---	---	1500	1900	8'-4"
10'-4"	#4	---	---	1500	1900	10'-4"
12'-4"	#5	#4	5'-0"	1500	1900	12'-4"
14'-4"	#6	#4	7'-0"	1500	1900	14'-4"
16'-4"	#6	#4	9'-0"	2500	3750	16'-4"

NOTES I THROUGH VI:

I. Details shown are primarily to conform design of sound walls to Type 736S and Type 736 SV Concrete Barriers. For sound wall details conforming with barriers see Standard Plan B15-7 and Revised Standard Plan RSP B15-8.

II. For details and sections not shown, see Standard Plan B15-7 and Revised Standard Plan RSP B15-8.

III. Slope ground at traffic side of barrier to drain. Maximum slope ±10%. See Std Plan B11-56, Note D.

IV. Pile spacing may be varied, but shall not exceed the tabular values. See Revised Standard Plan RSP B15-8.

V. For Case 1 - ground line to be at the same elevation on both sides of the barrier. Barrier shall not be used to retain earth.

VI. See Standard Plan B15-9 for other details.

NOTES A THROUGH G:

A. For type of block, type of block bond, and joint finish, see other sheets.

B. When blocks are laid in stacked bond, ladder type, galvanized joint reinforcement shall be provided. A minimum of 2-9 gauge wires continuous at 4'-0" maximum to be used. Locate reinforcement in joints that are at the approximate midpoint between bond beams.

C. Horizontal joints shall be tooled concave or may be weathered. Vertical joints shall be tooled concave or may be raked.

D. For intermediate wall heights (H), or barrier depths (H_e), that are between the values given, use the tabular information for the next higher (H) or (H_e).

E. Concrete to be used for the barrier shall contain not less than 590 pounds of cementitious material per cubic yard.

F. Masonry strengths are listed in the "SOUND WALL REINFORCEMENT TABLE".

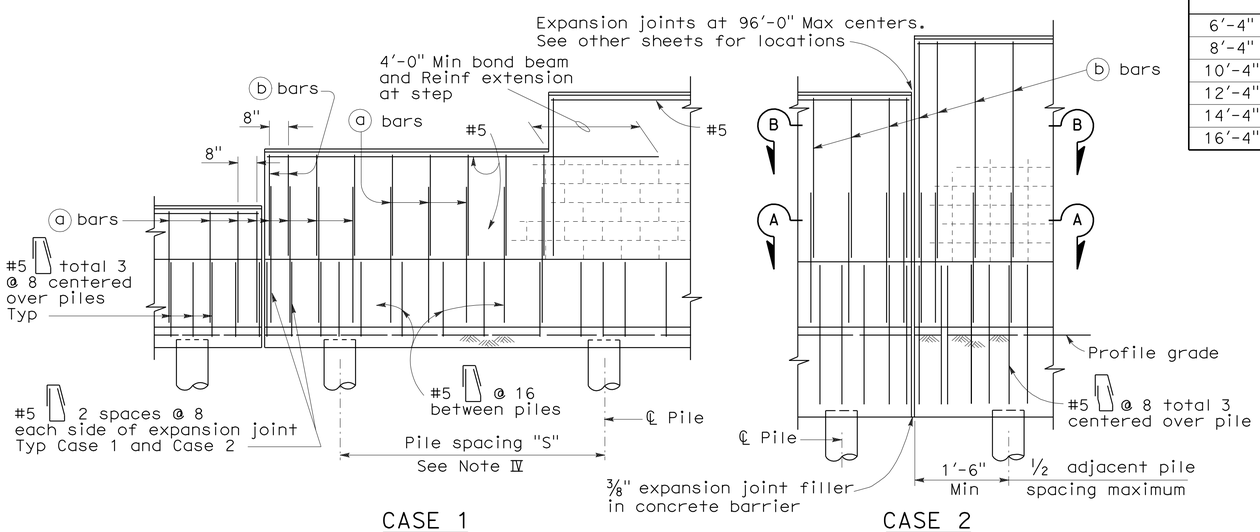

CASE 1

For details not shown, See Case 2.

CASE 2

For details not shown, See Case 1.

PARTIAL ELEVATIONS

STATE OF CALIFORNIA
DEPARTMENT OF TRANSPORTATION

SOUND WALL MASONRY BLOCK ON TYPE 736S/SV BARRIER DETAILS (1)

NO SCALE

RSP B15-6 DATED JUNE 5, 2009 SUPERSEDES
RSP B15-6 DATED OCTOBER 5, 2007 AND STANDARD PLAN B15-6
DATED MAY 1, 2006 - PAGE 296 OF THE STANDARD PLANS BOOK DATED MAY 2006.

REVISED STANDARD PLAN RSP B15-6

2006 REVISED STANDARD PLAN RSP B15-6

4-15-09

DIST	COUNTY	ROUTE	POST MILES TOTAL PROJECT	SHEET NO.	TOTAL SHEETS
12	Ora	22	R3.6/R12.7	55	61

REGISTERED CIVIL ENGINEER

June 6, 2008
PLANS APPROVAL DATE

REGISTERED PROFESSIONAL ENGINEER
Tillat Satter
No. C42892
Exp. 03-31-10
CIVIL
STATE OF CALIFORNIA

The State of California or its officers or agents shall not be responsible for the accuracy or completeness of electronic copies of this plan sheet.

To accompany plans dated 10-26-09

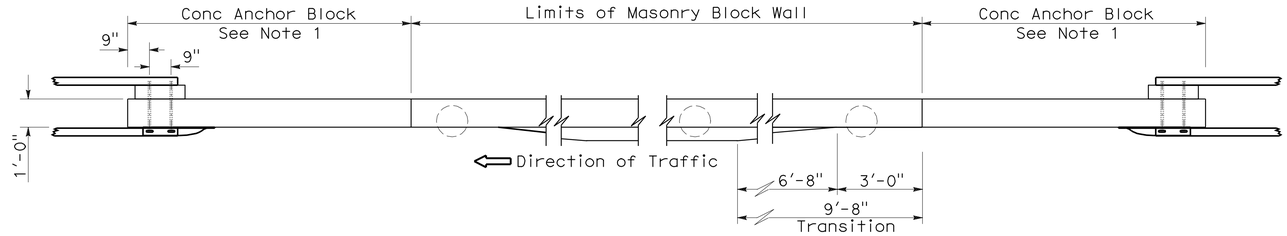

PLAN

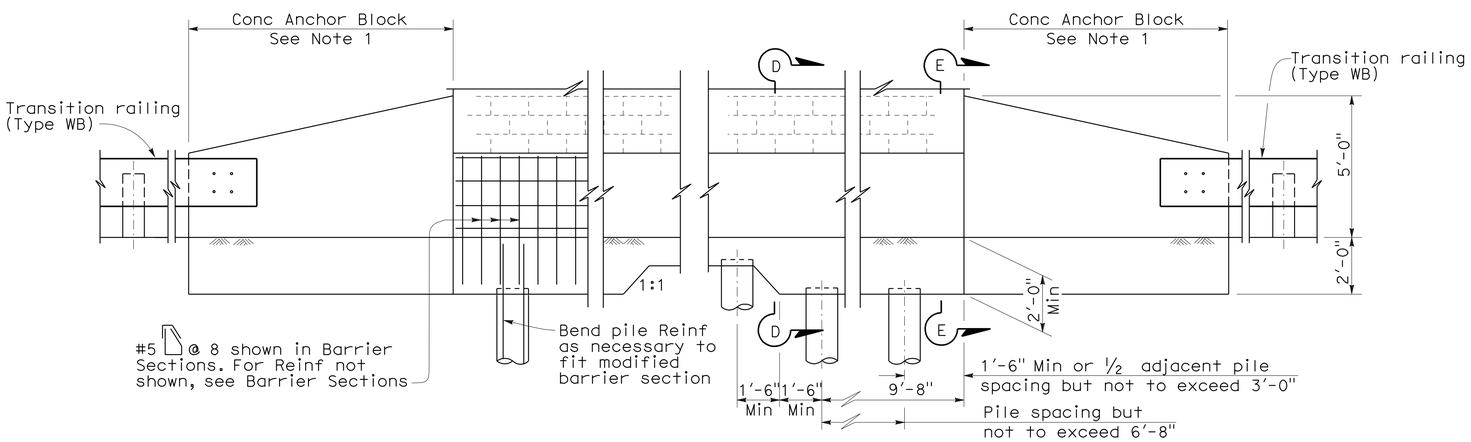

ELEVATION

METAL BEAM GUARDRAIL ANCHORAGE

For details not shown, see Standard Plan B11-56.

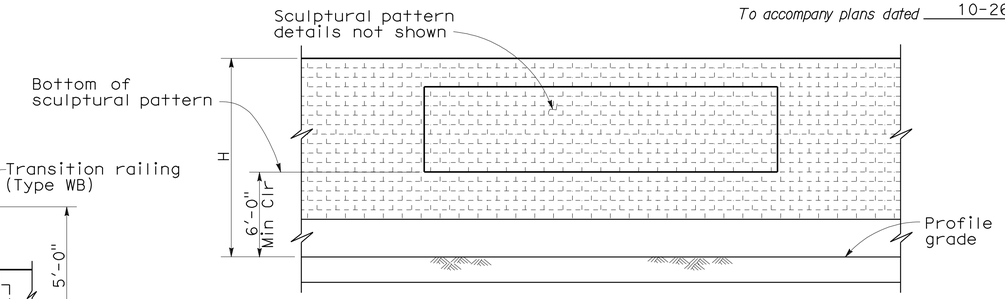

CLEARANCE DETAIL

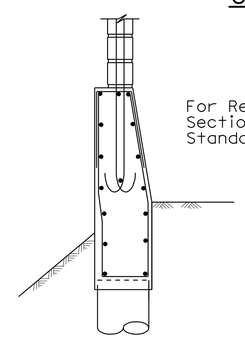

SECTION D-D

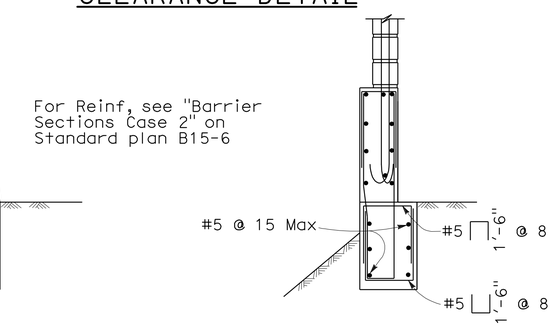

SECTION E-E

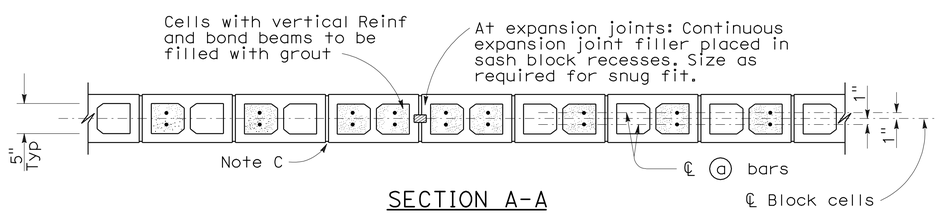

SECTION A-A

For details not shown, see other details.

H=6'-4" THRU H=10-4"

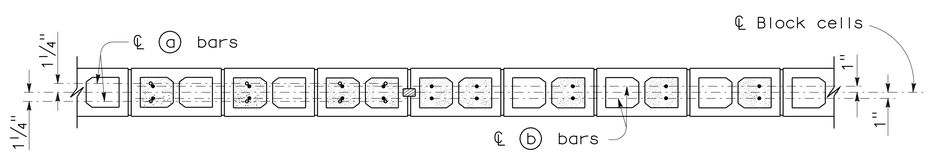

SECTION A-A SECTION B-B

For details not shown, see other details.

H=12'-4" THRU H=16'-4"

DESIGN NOTES:

DESIGN

Uniform Building Code, 1997 Edition
and the Bridge Design Specifications.

DESIGN WIND LOAD

27 psf

DESIGN SEISMIC LOAD

0.57 Dead load

REINFORCED CONCRETE

f'c = 3.6 ksi
fy = 60 ksi

CONCRETE MASONRY

REGULAR STRENGTH	HIGH STRENGTH	
f'm = 1500 psi	f'm = 2000 psi	f'm = 2500 psi
fb = 495 psi	fb = 660 psi	fb = 830 psi
fs = 24,000 psi	fs = 24,000 psi	fs = 24,000 psi
n = 25.8	n = 19.3	n = 15.5

NOTE:

1. For Concrete Anchor Block and connection details, see "Connection Detail DD" on Standard Plan A77J3.

STATE OF CALIFORNIA
DEPARTMENT OF TRANSPORTATION

SOUND WALL MASONRY BLOCK ON TYPE 736S/SV BARRIER DETAILS (2)

NO SCALE

RSP B15-7 DATED JUNE 6, 2008 SUPERSEDES STANDARD PLAN B15-7
DATED MAY 1, 2006 - PAGE 297 OF THE STANDARD PLANS BOOK DATED MAY 2006.

REVISED STANDARD PLAN RSP B15-7

2006 REVISED STANDARD PLAN RSP B15-7

4-23-08

DIST	COUNTY	ROUTE	POST MILES TOTAL PROJECT	SHEET NO.	TOTAL SHEETS
12	Ora	22	R3.6/R12.7	56	61

REGISTERED CIVIL ENGINEER

October 5, 2007
PLANS APPROVAL DATE

REGISTERED PROFESSIONAL ENGINEER
Douglas J. Dunrud
No. C47240
Exp. 12-31-07
CIVIL
STATE OF CALIFORNIA

The State of California or its officers or agents shall not be responsible for the accuracy or completeness of electronic copies of this plan sheet.

To accompany plans dated 10-26-09

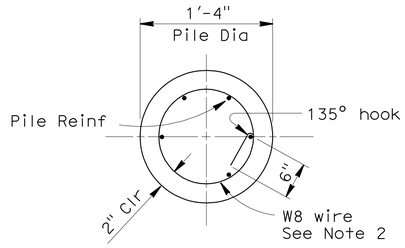

SECTION C-C

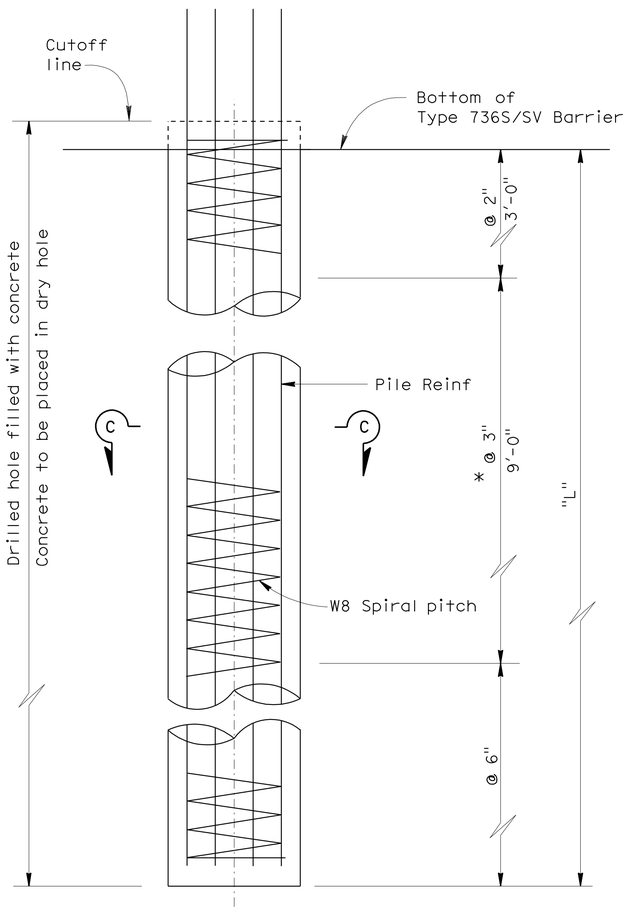

ELEVATION

* @ 2" at option of Contractor.

CASE 1: PILE DATA TABLE

Maximum H	ø = 25 Min			ø = 30 Min			ø = 35 Min			Maximum H
	S	L	Pile Reinf	S	L	Pile Reinf	S	L	Pile Reinf	
6'-4"	10'-0"	8'-6"	#6 Tol 6	10'-0"	7'-0"	#6 Tol 6	10'-0"	6'-0"	#6 Tol 6	6'-4"
8'-4"	10'-0"	9'-6"	#6 Tol 6	10'-0"	8'-0"	#6 Tol 6	10'-0"	7'-0"	#6 Tol 6	8'-4"
10'-4"	10'-0"	10'-6"	#6 Tol 6	10'-0"	9'-0"	#6 Tol 6	10'-0"	7'-6"	#6 Tol 6	10'-4"
12'-4"	10'-0"	11'-6"	#7 Tol 6	10'-0"	9'-6"	#7 Tol 6	10'-0"	8'-6"	#6 Tol 6	12'-4"
14'-4"	10'-0"	12'-6"	#7 Tol 7	10'-0"	10'-6"	#7 Tol 7	10'-0"	9'-0"	#7 Tol 7	14'-4"
16'-4"	10'-0"	13'-0"	#8 Tol 7	10'-0"	11'-6"	#8 Tol 7	10'-0"	9'-6"	#7 Tol 7	16'-4"

CASE 2: PILE DATA TABLE

H_e	Maximum H	ø = 30 Min			ø = 35 Min			Maximum H
		S	L	Pile Reinf	S	L	Pile Reinf	
1'-0"	6'-4"	10'-0"	15'-0"	#7 Tol 6	10'-0"	12'-0"	#6 Tol 6	6'-4"
	8'-4"	9'-9"	16'-0'	#7 Tol 6	10'-0"	13'-0"	#7 Tol 6	8'-4"
	10'-4"	8'-0"	16'-0"	#7 Tol 6	10'-0"	14'-0"	#7 Tol 6	10'-4"
	12'-4"	6'-9"	16'-0"	#7 Tol 6	10'-0"	15'-0"	#8 Tol 7	12'-4"
	14'-4"	5'-9"	16'-0"	#7 Tol 6	9'-6"	15'-6'	#8 Tol 7	14'-4"
	16'-4"	5'-0"	16'-0"	#7 Tol 6	8'-9"	16'-0"	#8 Tol 7	16'-4"
2'-0"	6'-4"	8'-3"	16'-0"	#7 Tol 6	10'-0"	13'-6"	#7 Tol 6	6'-4"
	8'-4"	7'-0"	16'-0"	#7 Tol 6	10'-0"	14'-6"	#7 Tol 7	8'-4"
	10'-4"	6'-0"	16'-0"	#7 Tol 6	10'-0"	15'-3'	#8 Tol 7	10'-4"
	12'-4"	5'-3"	16'-0"	#7 Tol 6	9'-9"	16'-0"	#8 Tol 7	12'-4"
	14'-4"	4'-6"	16'-0"	#7 Tol 6	8'-4"	16'-0"	#8 Tol 7	14'-4"
	16'-4"	4'-0"	16'-0"	#7 Tol 6	7'-4"	16'-0"	#8 Tol 7	16'-4"
3'-0"	6'-4"	6'-0"	16'-0"	#7 Tol 6	10'-0"	15'-3"	#8 Tol 7	6'-4"
	8'-4"	5'-3"	16'-0"	#7 Tol 6	10'-0"	16'-0"	#8 Tol 7	8'-4"
	10'-4"	4'-6"	16'-0"	#7 Tol 6	8'-10"	16'-0"	#8 Tol 7	10'-4"
	12'-4"	4'-0"	16'-0"	#7 Tol 6	7'-10"	16'-0"	#8 Tol 7	12'-4"
	14'-4"	3'-6'	16'-0"	#7 Tol 6	6'-10"	16'-0"	#8 Tol 7	14'-4"
	16'-4"	3'-3"	16'-0"	#7 Tol 6	6'-2"	16'-0"	#8 Tol 7	16'-4"
4'-0"	6'-4"	4'-3"	16'-0"	#7 Tol 6	8'-0"	15'-6"	#8 Tol 7	6'-4"
	8'-4"	3'-10"	16'-0"	#7 Tol 6	7'-4"	15'-9"	#8 Tol 7	8'-4"
	10'-4"	3'-6"	16'-0"	#7 Tol 6	6'-10"	16'-0"	#8 Tol 7	10'-4"
	12'-4"	3'-2"	16'-0"	#7 Tol 6	6'-3"	16'-0"	#8 Tol 7	12'-4"
	14'-4"	3'-0"	16'-3"	#7 Tol 6	5'-8"	16'-0"	#8 Tol 7	14'-4"
	16'-4"	2'-10"	16'-6"	#7 Tol 6	5'-0"	16'-0"	#8 Tol 7	16'-4"

NOTES:

1. For details not shown, see Revised Standard Plan RSP B15-6 and Standard Plan B15-7.

2. Lapped splices in spiral reinforcement shall be lapped at least 80 wire diameters. Spiral reinforcement at splices and at ends shall be terminated with a 135° hook with a 6" tail hooked around a longitudinal bar.

STATE OF CALIFORNIA
DEPARTMENT OF TRANSPORTATION

SOUND WALL MASONRY BLOCK ON TYPE 736S/SV BARRIER DETAILS (3)

NO SCALE

RSP B15-8 DATED OCTOBER 5, 2007 SUPERSEDES STANDARD PLAN B15-8
DATED MAY 1, 2006 - PAGE 298 OF THE STANDARD PLANS BOOK DATED MAY 2006.

REVISED STANDARD PLAN RSP B15-8

2006 REVISED STANDARD PLAN RSP B15-8

DIST	COUNTY	ROUTE	POST MILES TOTAL PROJECT	SHEET NO.	TOTAL SHEETS
12	Ora	22	R3.6/R12.7	57	61

REGISTERED CIVIL ENGINEER

April 3, 2009
PLANS APPROVAL DATE

REGISTERED PROFESSIONAL ENGINEER
Tillat Satter
No. C42892
Exp. 03-31-10
CIVIL
STATE OF CALIFORNIA

The State of California or its officers or agents shall not be responsible for the accuracy or completeness of electronic copies of this plan sheet.

To accompany plans dated 10-26-09

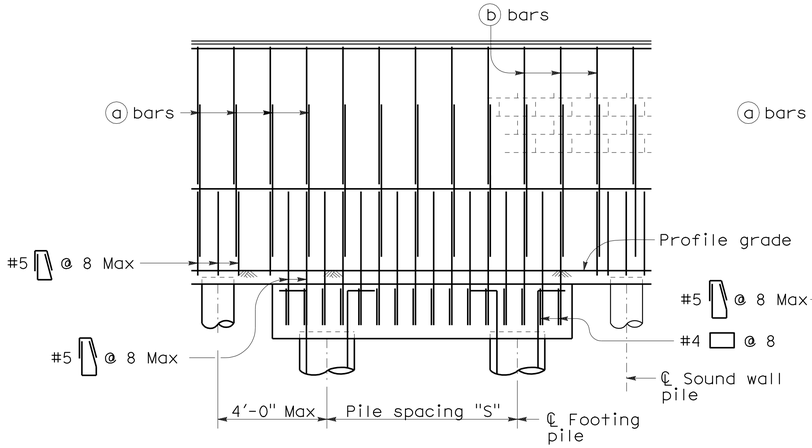

CASE 1

For details not shown, see Case 2.

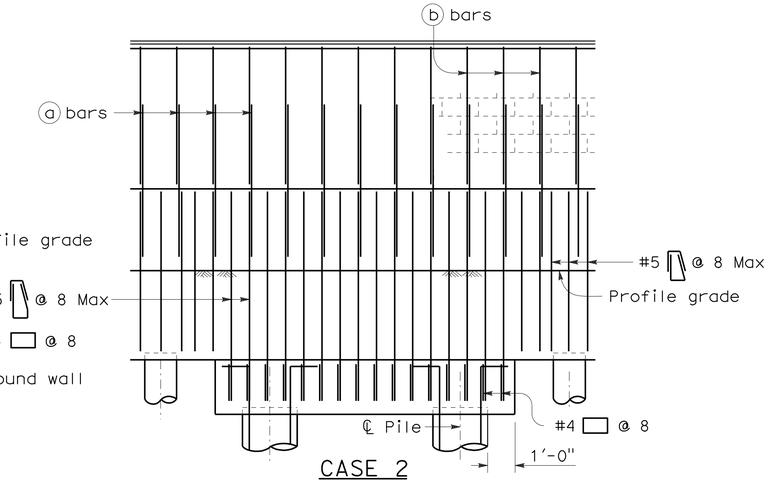

CASE 2

For details not shown, see Case 1.

PART ELEVATIONS

DESIGN NOTES:

DESIGN

Uniform Building Code, 1997 Edition
and the Bridge Design Specifications.

DESIGN WIND LOAD

27 psf

DESIGN SEISMIC LOAD

0.57 Dead load

REINFORCED CONCRETE

f'c = 3.6 ksi
fy = 60 ksi

CONCRETE MASONRY

REGULAR STRENGTH

f'm = 1500 psi
fb = 495 psi
fs = 24,000 psi
n = 25.8

HIGH STRENGTH

f'm = 2000 psi
fb = 660 psi
fs = 24,000 psi
n = 19.3

fb = 830 psi
fs = 24,000 psi
n = 15.5

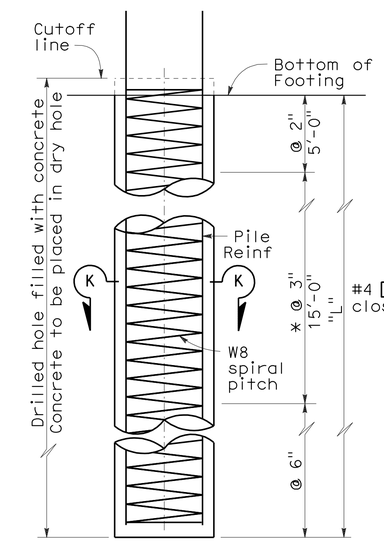

ELEVATION

* @ 2" at option of Contractor.

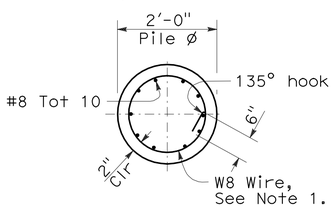

SECTION K-K

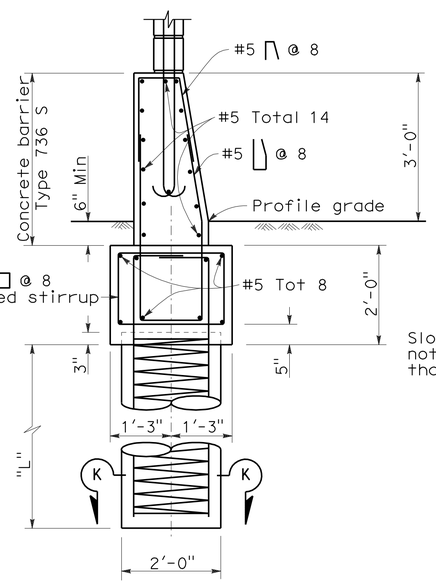

CASE 1

Level ground ±10% on both sides of barrier.
For details not shown, see Case 2.

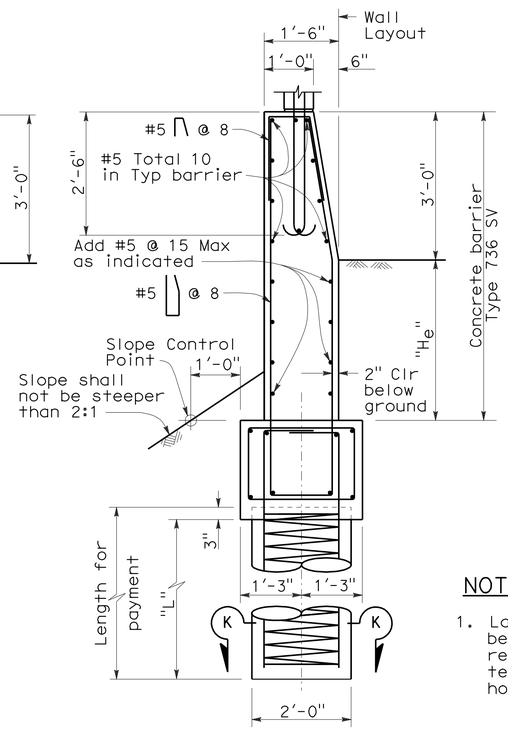

CASE 2

Level ground ±10% at the traffic side of barrier
and sloping ground on the opposite side.
For details now shown, see Case 1.

BARRIER SECTIONS

NOTE:

1. Lapped splices in Spiral reinforcement shall be lapped at least 80 wire diameters. Spiral reinforcement at splices and at ends shall be terminated with a 135° hook with a 6" tail hooked around a logitudinal bar.

CASE 1 : PILE DATA TABLE

Maximum H	ø = 25 S	ø = 25 L	ø = 30 S	ø = 30 L	ø = 35 S	ø = 35 L	Maximum H
6'-4"	16'-0"	8'-6"	16'-0"	7'-6"	16'-0"	6'-0"	6'-4"
8'-4"	16'-0"	9'-6"	16'-0"	8'-0"	16'-0"	7'-0"	8'-4"
10'-4"	16'-0"	10'-6"	16'-0"	9'-0"	16'-0"	7'-6"	10'-4"
12'-4"	16'-0"	11'-6"	16'-0"	10'-0"	16'-0"	8'-6"	12'-4"
14'-4"	16'-0"	12'-6"	16'-0"	11'-0"	16'-0"	9'-0"	14'-4"
16'-4"	16'-0"	13'-6"	16'-0"	11'-6"	16'-0"	10'-0"	16'-4"

CASE 2 : PILE DATA TABLE

H_e	H	ø = 30 Min S	ø = 30 Min L	ø = 35 Min S	ø = 35 Min L	H
1'-0"	6'-4"	16'-0"	15'-6"	16'-0"	12'-0"	6'-4"
	8'-4"	16'-0"	17'-0"	16'-0"	13'-6"	8'-4"
	10'-4"	16'-0"	18'-0"	16'-0"	14'-6"	10'-4"
	12'-4"	16'-0"	19'-6"	16'-0"	15'-6"	12'-4"
	14'-4"	16'-0"	20'-6"	16'-0"	16'-6"	14'-4"
	16'-4"	16'-0"	21'-6"	16'-0"	17'-6"	16'-4"
2'-0"	6'-4"	16'-0"	18'-0"	16'-0"	14'-0"	6'-4"
	8'-4"	16'-0"	19'-0"	16'-0"	15'-0"	8'-4"
	10'-4"	16'-0"	20'-0"	16'-0"	16'-0"	10'-4"
	12'-4"	16'-0"	21'-6"	16'-0"	17'-0"	12'-4"
	14'-4"	16'-0"	22'-6"	16'-0"	18'-0"	14'-4"
	16'-4"	14'-6"	22'-6"	16'-0"	18'-6"	16'-4"
3'-0"	6'-4"	16'-0"	20'-6"	16'-0"	15'-6"	6'-4"
	8'-4"	16'-0"	21'-6"	16'-0"	16'-6"	8'-4"
	10'-4"	15'-6"	22'-0"	16'-0"	17'-6"	10'-4"
	12'-4"	14'-0"	22'-0"	16'-0"	18'-6"	12'-4"
	14'-4"	13'-0"	22'-6"	15'-6"	19'-0"	14'-4"
	16'-4"	12'-0"	22'-6"	14'-0"	19'-0"	16'-4"
4'-0"	6'-4"	13'-0"	21'-0"	16'-0"	17'-6"	6'-4"
	8'-4"	12'-3"	21'-6"	15'-3"	18'-0"	8'-4"
	10'-4"	11'-6"	21'-6"	14'-3"	18'-6"	10'-4"
	12'-4"	10'-9"	22'-0"	13'-3"	18'-6"	12'-4"
	14'-4"	10'-0"	22'-0"	12'-3"	18'-6"	14'-4"
	16'-4"	9'-6"	22'-6"	11'-3"	19'-0"	16'-4"

STATE OF CALIFORNIA
DEPARTMENT OF TRANSPORTATION

SOUND WALL MASONRY BLOCK ON TYPE 736S/SV BARRIER ON PILE FOOTING FOR SPANNING UTILITIES

NO SCALE

RSP B15-15 DATED APRIL 3, 2009 SUPERSEDES STANDARD PLAN B15-15
DATED MAY 1, 2006 - PAGE 305 OF THE STANDARD PLANS BOOK DATED MAY 2006.

REVISED STANDARD PLAN RSP B15-15

2006 REVISED STANDARD PLAN RSP B15-15

12-3-08

DIST	COUNTY	ROUTE	POST MILES TOTAL PROJECT	SHEET NO.	TOTAL SHEETS
12	Ora	22	R3.6/R12.7	58	61

REGISTERED ELECTRICAL ENGINEER

October 5, 2007
PLANS APPROVAL DATE

REGISTERED PROFESSIONAL ENGINEER Jeffery G. McRae No. E14512 Exp. 6-30-08 ELECTRICAL STATE OF CALIFORNIA

The State of California or its officers or agents shall not be responsible for the accuracy or completeness of electronic copies of this plan sheet.

To accompany plans dated 10-26-09

ELECTROLIERS

STANDARD TYPES
15, 15D
15 STRUCTURE
21, 21D STRUCTURE
30
31
32
35
36-20A

High mast light pole

Double Arm lighting standard

Existing electrolier

Electrolier foundation (Future installation)

NOTES:

1. Luminaires shall be 310 W HPS when installed on Type 21, 21D, 30, 31, 32, 35 and 36-20A Standards, unless otherwise specified. Luminaires shall be 200 W HPS when installed on other type standards or poles, unless otherwise specified.
2. Luminaires shall be the cutoff type, ANSI Type III medium cutoff lighting distribution, unless otherwise specified.
3. Variations noted adjacent to symbol on project plans.

Electrolier (see project notes or project plans)

Luminaire on wood pole

STANDARD NOTES:

- AB — Abandon. If applied to conduit, remove conductors.
- BC — Install pull box in existing conduit run.
- BP — Pedestrian barricade, type as indicated on plan.
- CB — Install conduit into existing pull box.
- CC — Connect new and existing conduit. Remove existing conductors and install conductors as indicated.
- CF — Conduit to remain for future use. Remove conductors. Install pull wire or rope.
- DH — Detector handhole.
- FA — Foundation to be abandoned.
- IS — Install sign on signal mast arm.
- NS — No slip base on standard.
- PEC — Photoelectric control.
- PEU — Photoelectric unit.
- RC — Equipment or material to be removed and become the property of the Contractor.
- RE — Remove electrolier, fuses and ballast. Tape ends of conductors.
- RL — Relocate equipment.
- RR — Remove and reuse equipment.
- RS — Remove and salvage equipment.
- SC — Splice new to existing conductors.
- SD — Service disconnect.
- SF — Standard to remain for future use. Remove luminaire, pole conductors, fuses and ballast.
- TSP — Telephone service point.

ABBREVIATIONS AND EQUIPMENT DESIGNATIONS

PROPOSED	EXISTING	
BBS	bbs	Battery backup system
BC	bc	Bolt circle
C	C	Conduit
CCTV	cctv	Closed circuit television
CKT	ckt	Circuit
CMS	cms	Changeable message sign
DLC	dlc	Loop detector lead-in cable
EMS	ems	Extinguishable message sign
EVC	evc	Emergency vehicle cable
EVD	evd	Emergency vehicle detector
FB	fb	Flashing beacon
FBCA	fbca	Flashing beacon control assembly
FBS	fbs	Flashing beacon with slip base
FO	fo	Fiber optic
G	G	Ground (Equipment Grounding Conductor)
GFCI	GFCI	Ground fault circuit interrupt
HAR	har	Highway advisory radio
HEX	hex	Hexagonal
HPS	hps	High pressure sodium
IISNS	iisns	Internally illuminated street name sign
ISL	isl	Induction sign lighting
LED	led	Light emitting diode
LMA	lma	Luminaire mast arm
LPS	lps	Low pressure sodium
LTG	ltg	Lighting
LUM	lum	Luminaire
MAT	mat	Mast arm mounting vehicle signal faces, top attachment
MAS	mas	Mast arm mounting vehicle signal faces, side attachment
MAS-4A	mas-4A	Mast arm mounting vehicle signal faces, side attachment - 4 signal section
MAS-4B	mas-4B	
MAS-4C	mas-4C	
MAS-5A	mas-5A	Mast arm mounting vehicle signal faces, side attachment - 5 signal section
MAS-5B	mas-5B	
MC	mc	Mercury contactor
M/M	m/m	Multiple to multiple transformer
MT	mt	Conduit with pull wire or rope only
MTG	mtg	Mounting
	mv	Mercury vapor lighting fixture
N	N	Neutral (Grounded Conductor)
NC	NC	Normally closed
NO	NO	Normally open
PB	pb	Pull box
PEC	pec	Photoelectric control (Type I, II, III, IV or V as shown)
PED	ped	Pedestrian
PEU	peu	Photoelectric unit
PPB	ppb	Pedestrian push button
RL		Relocated equipment
RM	rm	Ramp metering
SB	sb	Slip base
SIC	sic	Signal interconnect cable
SIG	sig	Signal
SMA	sma	Signal mast arm
SNS	sns	Street name sign
SP	sp	Service point
TDC	tdc	Telephone demarcation cabinet
TMS	tms	Traffic monitoring station
TOS	tos	Traffic Operations System
VEH	veh	Vehicle
XFMR	xfmr	Transformer
COMM	comm	Communication
RWIS	rwis	Roadway weather information system

SOFFIT AND WALL MOUNTED LUMINAIRES

Pendant, 70 W HPS unless otherwise specified.

Flush, 70 W HPS unless otherwise specified.

Wall surface, 70 W HPS unless otherwise specified.

Existing soffit or wall luminaire to remain unmodified.

Existing soffit or wall luminaire to be modified as specified.

NOTE:

Arrow indicates "street side" of luminaire.

STATE OF CALIFORNIA
DEPARTMENT OF TRANSPORTATION

ELECTRICAL SYSTEMS (SYMBOLS AND ABBREVIATIONS)

NO SCALE

RSP ES-1A DATED OCTOBER 5, 2007 SUPERSEDES STANDARD PLAN ES-1A DATED MAY 1, 2006 - PAGE 400 OF THE STANDARD PLANS BOOK DATED MAY 2006.

REVISED STANDARD PLAN RSP ES-1A

2006 REVISED STANDARD PLAN RSP ES-1A

DIST	COUNTY	ROUTE	POST MILES TOTAL PROJECT	SHEET NO.	TOTAL SHEETS
12	Ora	22	R3.6/R12.7	59	61

REGISTERED ELECTRICAL ENGINEER

October 5, 2007
PLANS APPROVAL DATE

REGISTERED PROFESSIONAL ENGINEER Jeffery G. McRae No. E14512 Exp. 6-30-08 ELECTRICAL STATE OF CALIFORNIA

The State of California or its officers or agents shall not be responsible for the accuracy or completeness of electronic copies of this plan sheet.

To accompany plans dated 10-26-09

CONDUIT

PROPOSED	EXISTING	
		Lighting Conduit, unless otherwise indicated or noted
		Traffic signal conduit
C	c	Communication conduit
T	t	Telephone conduit
F	f	Fire alarm conduit
FO	fo	Fiber optic conduit
		Conduit termination (RSP ES-9A C)
R	r	Conduit riser in/on structure or service pole

SERVICE EQUIPMENT

PROPOSED	EXISTING	
OH	oh	Overhead lines
U	U	Wood pole "U" indicates utility owned
		Pole guy with anchor
		Utility transformer - ground mounted
III		Service equipment enclosure type
		Service equipment enclosure door indicates front of enclosure
T	t	Telephone demarcation cabinet

POLE-MOUNTED SERVICE DESIGNATION

Type of installation

TYPE H SERVICE - 28'-10" ← Pole height above grade

ILLUMINATED OVERHEAD SIGN

PROPOSED	EXISTING	
		Overhead sign - Single post
		Overhead sign - Two post
		Overhead sign - Mounted on structure
		Overhead sign with electrolier

SIGNAL EQUIPMENT

PROPOSED	EXISTING	
		Pedestrian signal face
		Pedestrian push button post
		Pedestrian barricade
		Vehicle signal face (with backplate, 3-Section: red, yellow and green)
		Vehicle signal face with angle visors
PV	PV	Modifications of basic symbols: "L" indicates all non-arrow sections louvered "LG" indicates louvered green section only "PV" indicates 12" programmed visibility sections "8" indicates all 8" sections (only when specified)
		Type 15TS and Vehicle signal face
		Vehicle signal face with red, yellow and green left arrow sections
		Vehicle signal face with red and yellow sections and up green arrow
		Vehicle signal face (5 Section) with red, yellow and green sections and yellow and green right arrows
		Type 1 Standard and attached vehicle signal faces
		Standard with signal mast arm only and attached vehicle signal faces and internally illuminated street name sign
		Type 33 Standard, Left-turn vehicle signal face and sign
		Standard with luminaire and signal mast arms and attached vehicle signal faces
		Cantilever flashing beacon Type 9 Frame, with a sign unless otherwise specified or indicated
		Type 15-FBS Standard with two vehicle signal face sections with lens, backplate and visor with a sign
R	Y	Flashing beacon. One vehicle signal face section with lens, backplate and visor. "R" indicates red indication, "Y" indicates yellow indication
		Controller assembly. Door indicates front of cabinet

SIGNAL EQUIPMENT Cont

PROPOSED	EXISTING	
		Guard post
		Type 1 Standard with "Meter On" sign
		Emergency Vehicle detector

NOTES:

1. All signal sections shall be 12" unless shown otherwise.
2. Signal heads shall be provided with backplates unless shown otherwise.
3. Signal indication shall be LED.

STATE OF CALIFORNIA
DEPARTMENT OF TRANSPORTATION

ELECTRICAL SYSTEMS (SYMBOLS AND ABBREVIATIONS)

NO SCALE

RSP ES-1B DATED OCTOBER 5, 2007 SUPERCEDES STANDARD PLAN ES-1B DATED MAY 1, 2006 - PAGE 401 OF THE STANDARD PLANS BOOK DATED MAY 2006.

REVISED STANDARD PLAN RSP ES-1B

2006 REVISED STANDARD PLAN RSP ES-1B

7-10-07

DIST	COUNTY	ROUTE	POST MILES TOTAL PROJECT	SHEET NO.	TOTAL SHEETS
12	Ora	22	R3.6/R12.7	60	61

REGISTERED ELECTRICAL ENGINEER

October 5, 2007
PLANS APPROVAL DATE

REGISTERED PROFESSIONAL ENGINEER Jeffery G. McRae No. E14512 Exp. 6-30-08 ELECTRICAL STATE OF CALIFORNIA

The State of California or its officers or agents shall not be responsible for the accuracy or completeness of electronic copies of this plan sheet.

To accompany plans dated 10-26-09

EQUIPMENT IDENTIFICATION

ILLUMINATED SIGN IDENTIFICATION NUMBER:

Sign No. 12345 — Sign number - Place on post or structure

10 ISL SCI 1.0

- 1.0 — Transformer rating (kVA)
- SCI — Lighting control type
- ISL — Number and type of fixtures

Do NOT place on standard or structure

ELECTROLIER OR EQUIPMENT IDENTIFICATION NUMBER:

12345 - 15'-0"

- 15'-0" — Mast arm length, if shown. Do not place on standard or structure.
- 12345 — Equipment number - Place on standard or structure. Existing equipment numbers are shown in parenthesis

CONDUIT AND CONDUCTOR IDENTIFICATION:

1½"C, 2#10, 15#14, 2 DLC

- 2#10, 15#14, 2 DLC — Number and size of conductors and cables
- 1½"C — Size of conduit in inches

Ø1, Ø2, Ø2P, etc.	Traffic phase identification for signal faces, detectors and phase diagrams
1 2 3	Project note numbers
A B C	Equipment description, installation or item numbers
1 2 3	Conduit run numbers

SIGNAL AND LIGHTING STANDARD (TYPICAL DESIGNATION):

19A - 3 - 100

- 100 — Wind velocity = 100 mph
- 3 — Case 3 arm loading
- 19A — Standard type
- Standard Plan sheet number
- Detail number or letter

MISCELLANEOUS EQUIPMENT

PROPOSED	EXISTING	
CMS	cms	Changeable message sign
		Closed circuit television camera
		Highway advisory radio pole and antenna
EMS	ems	Extinguishable message sign
M V	m v	Detection device M = Microwave sensor V = Video image sensor

WIRING DIAGRAM LEGEND

P	Pole
CB	Circuit breaker
A	Ampere
V	Volt
M	Metered
UM	Unmetered
NB	Neutral bus
GB	Ground bus
G	Equipment grounding conductor
N	Grounded conductor (Neutral)

- External conductor
- Conductor or bus
- Tie point
- Contactor coil
- Contactor, Contact NO
- Terminal blocks
- Contactor, Contact NC
- Enclosure bond
- Grounding electrode
- Circuit breaker
- Receptacle

PULL BOXES

PROPOSED	EXISTING	
		Pull box-No. 5 unless otherwise indicated or noted.
3	9A(21)	Pull box-Additional designations or descriptions

3 = No. 3½ pull box
5 = No. 5 pull box
6 = No. 6 pull box
7 = No. 7 (Ceiling pull box)
8 = No. 8 (Pendant soffit pull box)
9 = No. 9 pull box
9A = No. 9A pull box

(C) = Communications pull box
(E) = Pull box with extension
(S) = Sprinkler control pull box
(21) = Anchor bolts and conduit for future installation of Type 21 Standard
(T) = Traffic pull box

VEHICLE DETECTORS

5 J 9 U

- U — U = Upper, L = Lower
- 9 — Slot number in input file
- J — Input file (I or J)
- 5 — Phase

PROPOSED	EXISTING	
		Type A detector loop. Outline of sawcut shown.
		Type B detector loop. Outline of sawcut shown.
		Type C detector loop. Outline of sawcut shown.
		Type D detector loop. Outline of sawcut shown.
		Type E detector loop. Outline of sawcut shown.
		Type Q detector loop. Outline of sawcut shown.
		Magnetic detector
DH	dh	Detector handhole
		Microwave or video detection zone

STATE OF CALIFORNIA
DEPARTMENT OF TRANSPORTATION

ELECTRICAL SYSTEMS (SYMBOLS AND ABBREVIATIONS)

NO SCALE

RSP ES-1C DATED OCTOBER 5, 2007 SUPERCEDES STANDARD PLAN ES-1C DATED MAY 1, 2006 - PAGE 402 OF THE STANDARD PLANS BOOK DATED MAY 2006.

REVISED STANDARD PLAN RSP ES-1C

2006 REVISED STANDARD PLAN RSP ES-1C

DIST	COUNTY	ROUTE	POST MILES TOTAL PROJECT	SHEET NO.	TOTAL SHEETS
12	Ora	22	R3.6/R12.7	61	61

REGISTERED ELECTRICAL ENGINEER

October 5, 2007
PLANS APPROVAL DATE

REGISTERED PROFESSIONAL ENGINEER Jeffery G. McRae No. E14512 Exp. 6-30-08 ELECTRICAL STATE OF CALIFORNIA

The State of California or its officers or agents shall not be responsible for the accuracy or completeness of electronic copies of this plan sheet.

To accompany plans dated 10-26-09

LOOP INSTALLATION PROCEDURE

1. Loops shall be centered in lanes.
2. Saw slots in pavement for loop conductors as shown in details.
3. Distance between side of loop and a lead-in saw cut from adjacent detectors shall be 2'-0" minimum. Distance between lead-in saw cuts shall be 6" minimum.
4. Bottom of saw slot shall be smooth with no sharp edges.
5. Slots shall be washed until clean, blown out and thoroughly dried before installing loop conductors.
6. Adjacent loops on the same sensor unit channel shall be wound in opposite directions.
7. Identify and tag loop circuit pairs in the pull box with loop number, start (S) and finish (F) of conductor. Identify and tag lead-in-cable with sensor number and phase.
8. Install loop conductor in slot using a 3/16" to 1/4" thick wood paddle. Hold loop conductors with wood paddles (at the bottom of the sawed slot) during sealant placement.
9. No more than 2 twisted pairs shall be installed in one sawed slot.
10. Allow additional 5'-0" of slack length of conductor for the lead-in run to pull box.
11. The additional length of each conductor for each loop shall be twisted together into a pair (6 turns per 3'-4" minimum) before being placed in the slot and conduit leading to pull box.
12. Test each loop circuit for continuity, circuit resistance and insulation resistance at the pull box before filling slots.
13. Fill slots as shown in details.
14. Splice loop conductors to lead-in-cable. Splices shall be soldered.
15. End of lead-in-cable and Type 2 loop conductor shall be waterproofed prior to installing in conduit to prevent moisture from entering the cable.
16. Lead-in-cable shall not be spliced between the pull box and the controller cabinet terminals.
17. Test each loop circuit for continuity, circuit resistance and insulation resistance at the controller cabinet location.
18. Where loop conductors are not to be spliced to a lead-in-cable, the ends of the conductors shall be taped and waterproofed with electrical insulating coating.

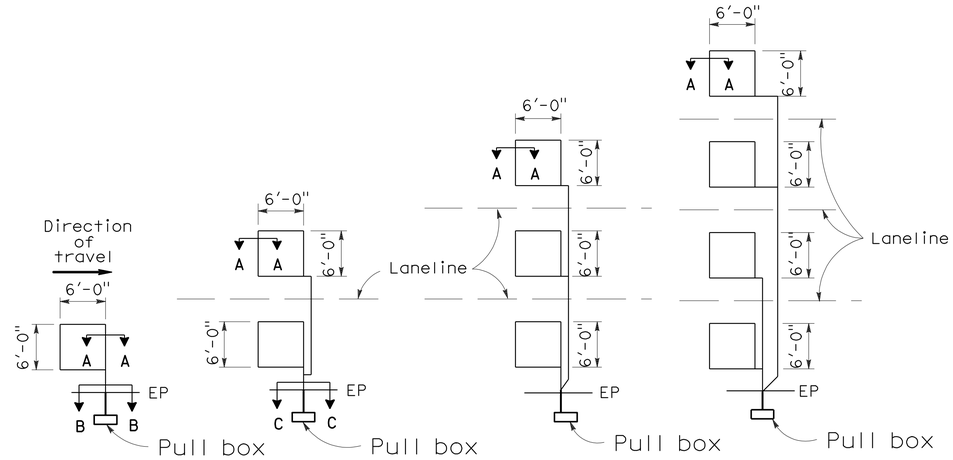

TYPE 1A INSTALLATION | TYPE 2A INSTALLATION | TYPE 3A INSTALLATION | TYPE 4A INSTALLATION

SAWCUT DETAILS

(Type A loop detector configurations illustrated)

1. 1A thru 4A = 1 Type A loop configuration in each lane.
2. 1B thru 4B = 1 Type B loop configuration in each lane.
3. 1C = 1 Type C loop configuration entering lanes as required.
4. 1D thru 4D = 1 Type D loop configuration in each lane.
5. 1E thru 4E = 1 Type E loop configuration in each lane.
6. 1Q thru 4Q = 1 Type Q loop configuration in each lane. (Use Type A, B, C, D, E or Q loop detector configurations only when specified or shown on plans)

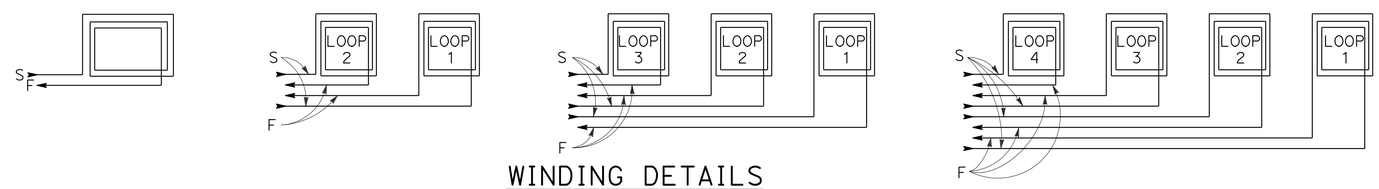

WINDING DETAILS

See Notes 6 and 7

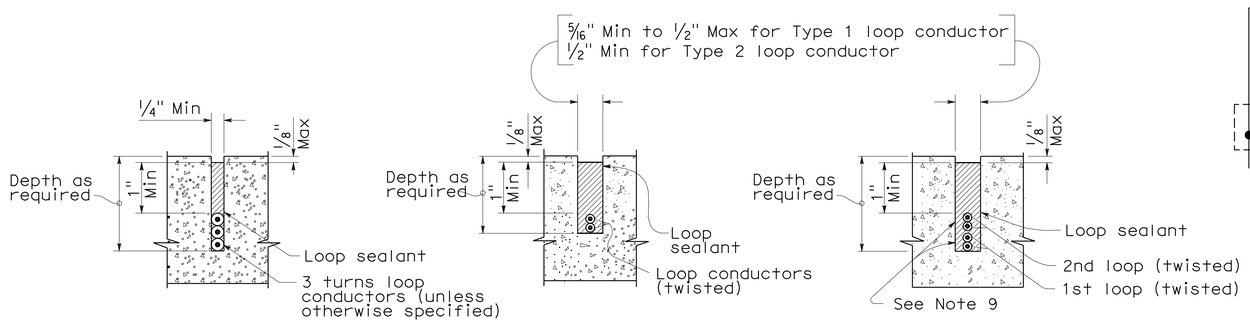

SECTION A-A | SECTION B-B | SECTION C-C

SLOT DETAILS - TYPE 1 AND TYPE 2 LOOP CONDUCTOR

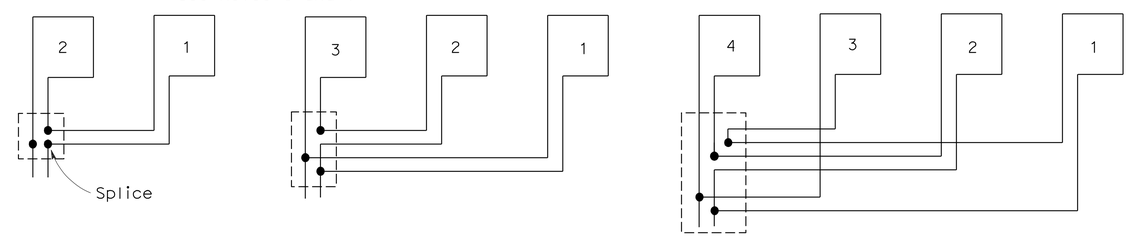

TYPICAL LOOP CONNECTIONS

(Dashed lines represent the pull box)

STATE OF CALIFORNIA
DEPARTMENT OF TRANSPORTATION

ELECTRICAL SYSTEMS (DETECTORS)

NO SCALE

RSP ES-5A DATED OCTOBER 5, 2007 SUPERCEDES STANDARD PLAN ES-5A DATED MAY 1, 2006 - PAGE 423 OF THE STANDARD PLANS BOOK DATED MAY 2006.

REVISED STANDARD PLAN RSP ES-5A

2006 REVISED STANDARD PLAN RSP ES-5A

8-17-07