Dist	COUNTY	ROUTE	POST MILES TOTAL PROJECT	SHEET No.	TOTAL SHEETS
12	Ora	39	9.8/10.5	1	80

ACNH-P039(031)E

STATE OF CALIFORNIA
DEPARTMENT OF TRANSPORTATION

PROJECT PLANS FOR CONSTRUCTION ON
STATE HIGHWAY
IN ORANGE COUNTY
IN STANTON FROM
0.1 MILE SOUTH OF BEVER PLACE TO
0.1 MILE NORTH OF STANTON STORM CHANNEL

TO BE SUPPLEMENTED BY STANDARD PLANS DATED 2010

INDEX OF PLANS

SHEET No.	DESCRIPTION
1	TITLE AND LOCATION MAP
2-3	TYPICAL CROSS SECTIONS
4-6	LAYOUTS
7-14	CONSTRUCTION DETAILS
15-24	DRAINAGE PLANS, PROFILES, DETAILS AND QUANTITIES
25-27	UTILITY PLANS
28-29	CONSTRUCTION AREA SIGNS
30-34	PAVEMENT DELINEATION AND SIGN PLANS, AND QUANTITIES
35-36	SUMMARY OF QUANTITIES
37-39	ELECTRICAL PLANS
40-80	REVISED STANDARD PLANS

THE STANDARD PLANS LIST APPLICABLE TO THIS CONTRACT IS INCLUDED IN THE NOTICE TO BIDDERS AND SPECIAL PROVISIONS BOOK.

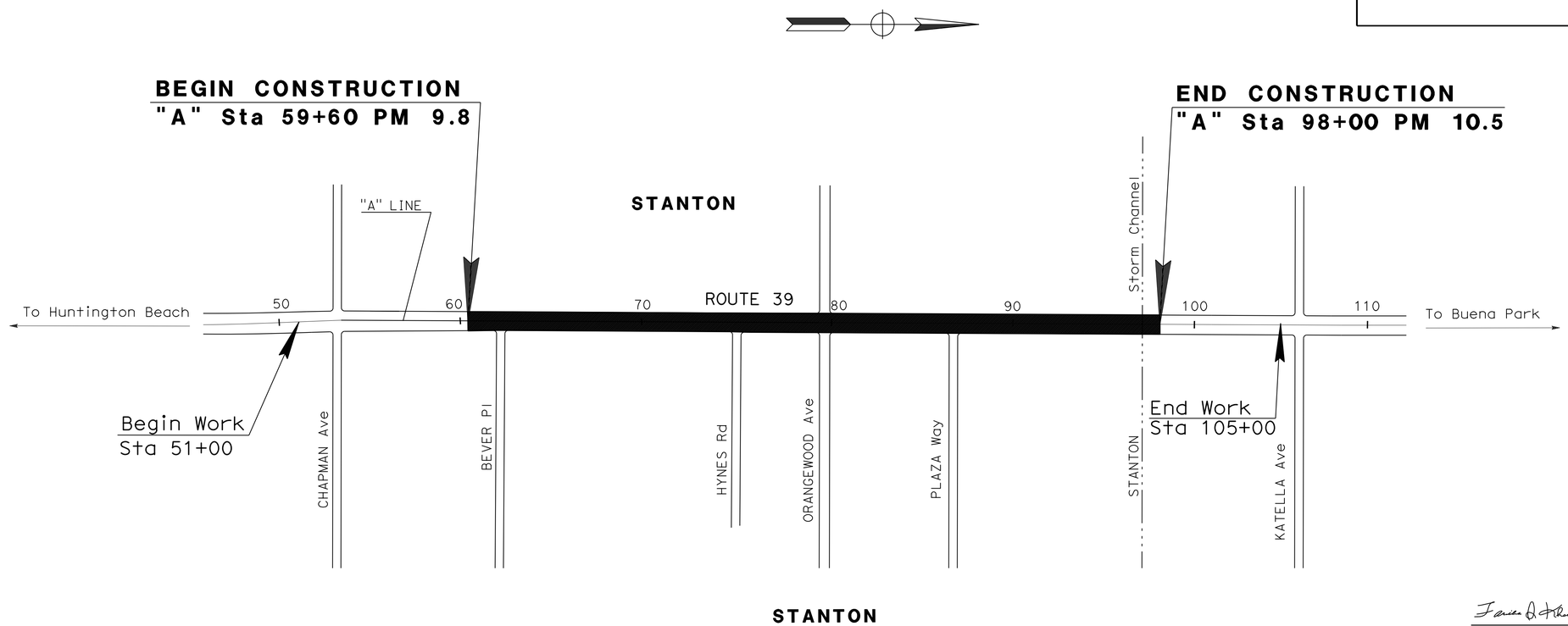

THE CONTRACTOR SHALL POSSESS THE CLASS (OR CLASSES) OF LICENSE AS SPECIFIED IN THE "NOTICE TO BIDDERS."

NO SCALE

PROJECT MANAGER AHMAD HINDIYEH

DESIGN ENGINEER CHRISTOPHER LE

PROJECT ENGINEER REGISTERED CIVIL ENGINEER — DATE 05-09-16

REGISTERED PROFESSIONAL ENGINEER FARIBA A. KHOSRAVI No. C 54265 Exp. 12/31/17 CIVIL STATE OF CALIFORNIA

JUNE 6, 2016
PLANS APPROVAL DATE

THE STATE OF CALIFORNIA OR ITS OFFICERS OR AGENTS SHALL NOT BE RESPONSIBLE FOR THE ACCURACY OR COMPLETENESS OF SCANNED COPIES OF THIS PLAN SHEET.

CONTRACT No.	12-0H2704
PROJECT ID	1200000211

LAST REVISION 06-17-16

DATE PLOTTED => 04-AUG-2016
TIME PLOTTED => 11:27

Dist	COUNTY	ROUTE	POST MILES TOTAL PROJECT	SHEET No.	TOTAL SHEETS
12	Ora	39	9.8/10.5	2	80

REGISTERED CIVIL ENGINEER 05-09-16 DATE

06-06-16
PLANS APPROVAL DATE

REGISTERED PROFESSIONAL ENGINEER
FARIBA A. KHOSRAVI
No. C 54265
Exp. 12/31/17
CIVIL
STATE OF CALIFORNIA

THE STATE OF CALIFORNIA OR ITS OFFICERS OR AGENTS SHALL NOT BE RESPONSIBLE FOR THE ACCURACY OR COMPLETENESS OF SCANNED COPIES OF THIS PLAN SHEET.

NOTE:

1. DIMENSIONS OF PAVEMENT STRUCTURES (STRUCTURAL SECTIONS) ARE SUBJECT TO TOLERANCES SPECIFIED IN THE STANDARD SPECIFICATIONS.

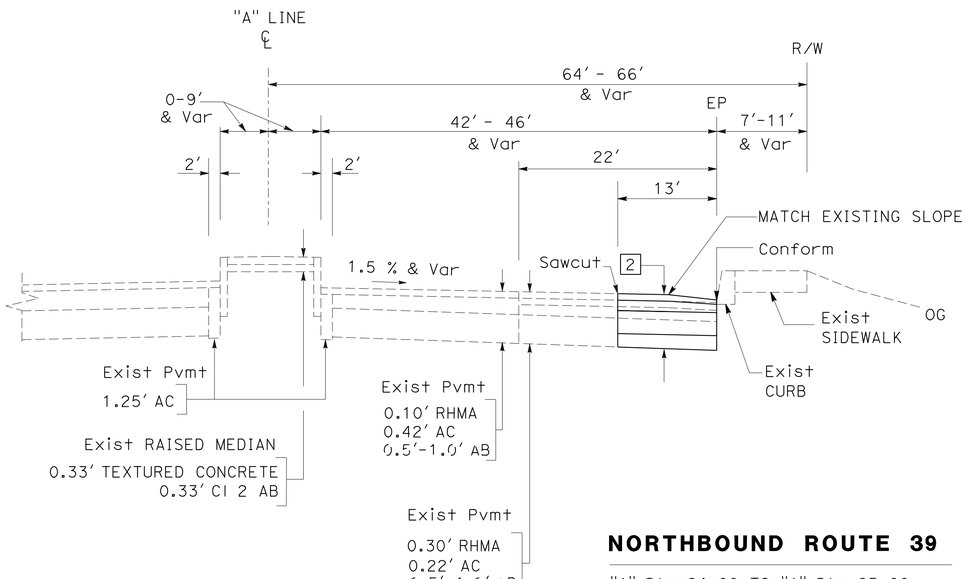

NORTHBOUND ROUTE 39

"A" Sta 64+00 TO "A" Sta 65+00

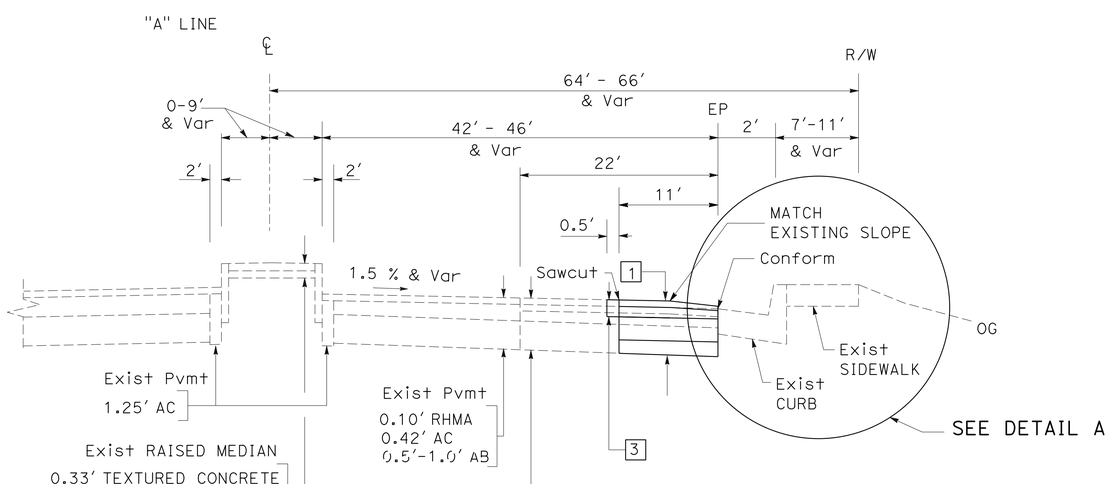

NORTHBOUND ROUTE 39

"A" Sta 59+60 TO "A" Sta 64+00
"A" Sta 65+00 TO "A" Sta 77+00

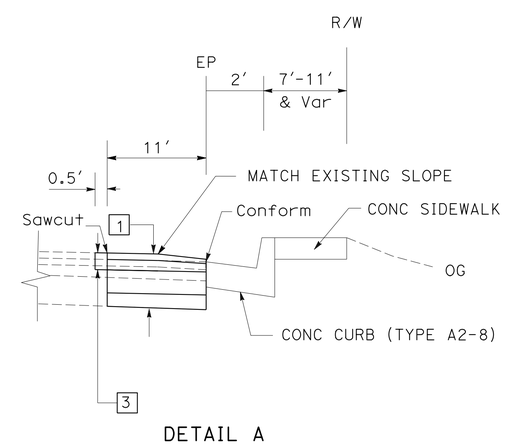

DETAIL A

"A" Sta 61+86 TO "A" Sta 61+99
"A" Sta 63+56 TO "A" Sta 63+69
"A" Sta 65+56 TO "A" Sta 65+69
"A" Sta 67+98 TO "A" Sta 68+11
"A" Sta 70+56 TO "A" Sta 70+69
"A" Sta 76+76 TO "A" Sta 76+89

STRUCTURAL SECTION TYPES:

1
- 0.10′ RUBBERIZED HOT MIX ASPHALT-OPEN GRADED (OGFC)
- 0.20′ RUBBERIZED HOT MIX ASPHALT (GAP GRADED)
- 1.10′ HMA (TYPE A)
- 0.50′ CLASS 2 AS

2
- 0.90′ JOINTED PLAIN CONC Pvmt (RSC)
- 0.50′ HMA (TYPE A)
- 2.50′ CLASS 2 AS

3
- 0.10′ RUBBERIZED HOT MIX ASPHALT-OPEN GRADED (OGFC)
- 0.20′ RUBBERIZED HOT MIX ASPHALT (GAP GRADED)
- 0.30′ COLD PLANE AC PAVEMENT

4
- 0.33′ MINOR CONCRETE (TEXTURED PAVING)
- 0.33′ CLASS 2 AS

PAVEMENT CLIMATE REGION

SOUTH COAST

TYPICAL CROSS SECTION

NO SCALE

X-1

STATE OF CALIFORNIA - DEPARTMENT OF TRANSPORTATION
Caltrans® DESIGN BRANCH B
FUNCTIONAL SUPERVISOR: CHRISTOPHER LE
CALCULATED-DESIGNED BY: FARIBA A. KHOSRAVI
CHECKED BY: ALIX WILLIAMS
REVISED BY
DATE REVISED

LAST REVISION 2-19-16
DATE PLOTTED => 04-AUG-2016
TIME PLOTTED => 11:27

Dist	COUNTY	ROUTE	POST MILES TOTAL PROJECT	SHEET No.	TOTAL SHEETS
12	Ora	39	9.8/10.5	3	80

REGISTERED CIVIL ENGINEER 05-09-16 DATE

06-06-16
PLANS APPROVAL DATE

REGISTERED PROFESSIONAL ENGINEER
FARIBA A. KHOSRAVI
No. C 54265
Exp. 12/31/17
CIVIL
STATE OF CALIFORNIA

THE STATE OF CALIFORNIA OR ITS OFFICERS OR AGENTS SHALL NOT BE RESPONSIBLE FOR THE ACCURACY OR COMPLETENESS OF SCANNED COPIES OF THIS PLAN SHEET.

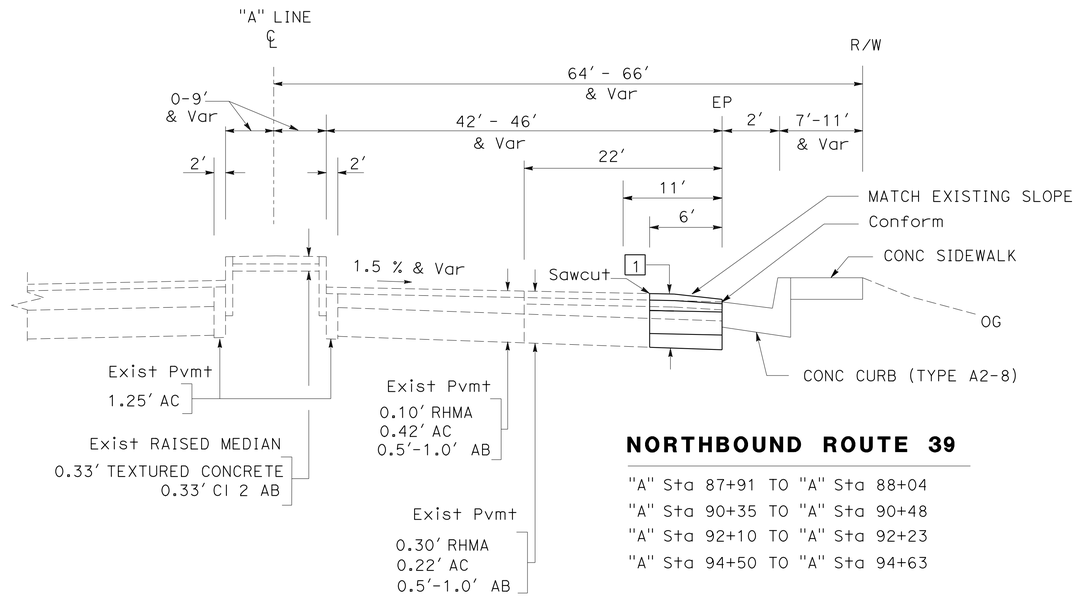

NORTHBOUND ROUTE 39

"A" Sta 87+91 TO "A" Sta 88+04
"A" Sta 90+35 TO "A" Sta 90+48
"A" Sta 92+10 TO "A" Sta 92+23
"A" Sta 94+50 TO "A" Sta 94+63

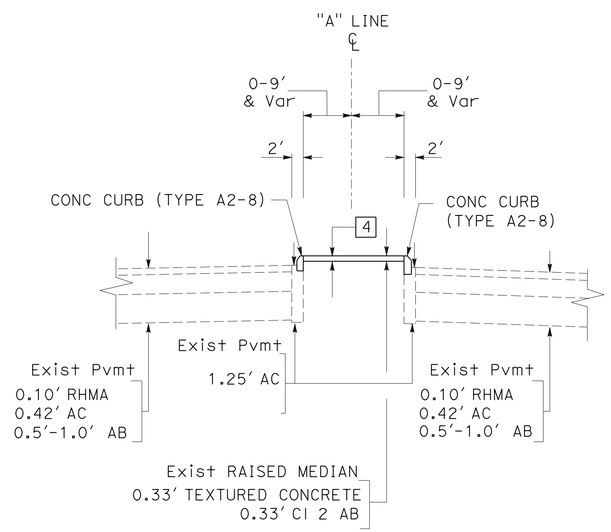

ROUTE 39

BEACH Blvd AND ORANGEWOOD Ave INTERSECTION
(SEE SHEET C-8)

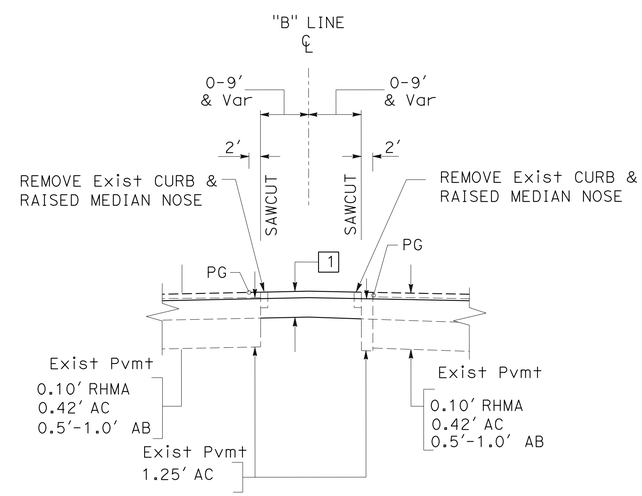

ROUTE 39

BEACH Blvd AND ORANGEWOOD Ave Intersection
(SEE SHEET C-8)

TYPICAL CROSS SECTION

NO SCALE

X-2

STATE OF CALIFORNIA - DEPARTMENT OF TRANSPORTATION
Caltrans®
DESIGN BRANCH B

FUNCTIONAL SUPERVISOR: CHRISTOPHER LE
CALCULATED-DESIGNED BY: FARIBA A. KHOSRAVI
CHECKED BY: ALIX WILLIAMS
REVISED BY
DATE REVISED

LAST REVISION 5-20-16
DATE PLOTTED => 04-AUG-2016
TIME PLOTTED => 11:27

Dist	COUNTY	ROUTE	POST MILES TOTAL PROJECT	SHEET No.	TOTAL SHEETS
12	Ora	39	9.8/10.5	4	80

REGISTERED CIVIL ENGINEER 05-09-16 DATE

06-06-16
PLANS APPROVAL DATE

REGISTERED PROFESSIONAL ENGINEER FARIBA A. KHOSRAVI No. C 54265 Exp. 12/31/17 CIVIL STATE OF CALIFORNIA

THE STATE OF CALIFORNIA OR ITS OFFICERS OR AGENTS SHALL NOT BE RESPONSIBLE FOR THE ACCURACY OR COMPLETENESS OF SCANNED COPIES OF THIS PLAN SHEET.

NOTES:

1. FOR ACCURATE RIGHT OF WAY DATA, CONTACT RIGHT OF WAY ENGINEERING AT THE DISTRICT OFFICE.

LEGEND:

- [X] STRUCTURAL SECTION TYPE, SEE SHEET X-1
- (X) CURVE No.
- ◇X CURB RAMP No.

ABBREVIATION:

OCSD - ORANGE COUNTY SANITATION DISTRICT

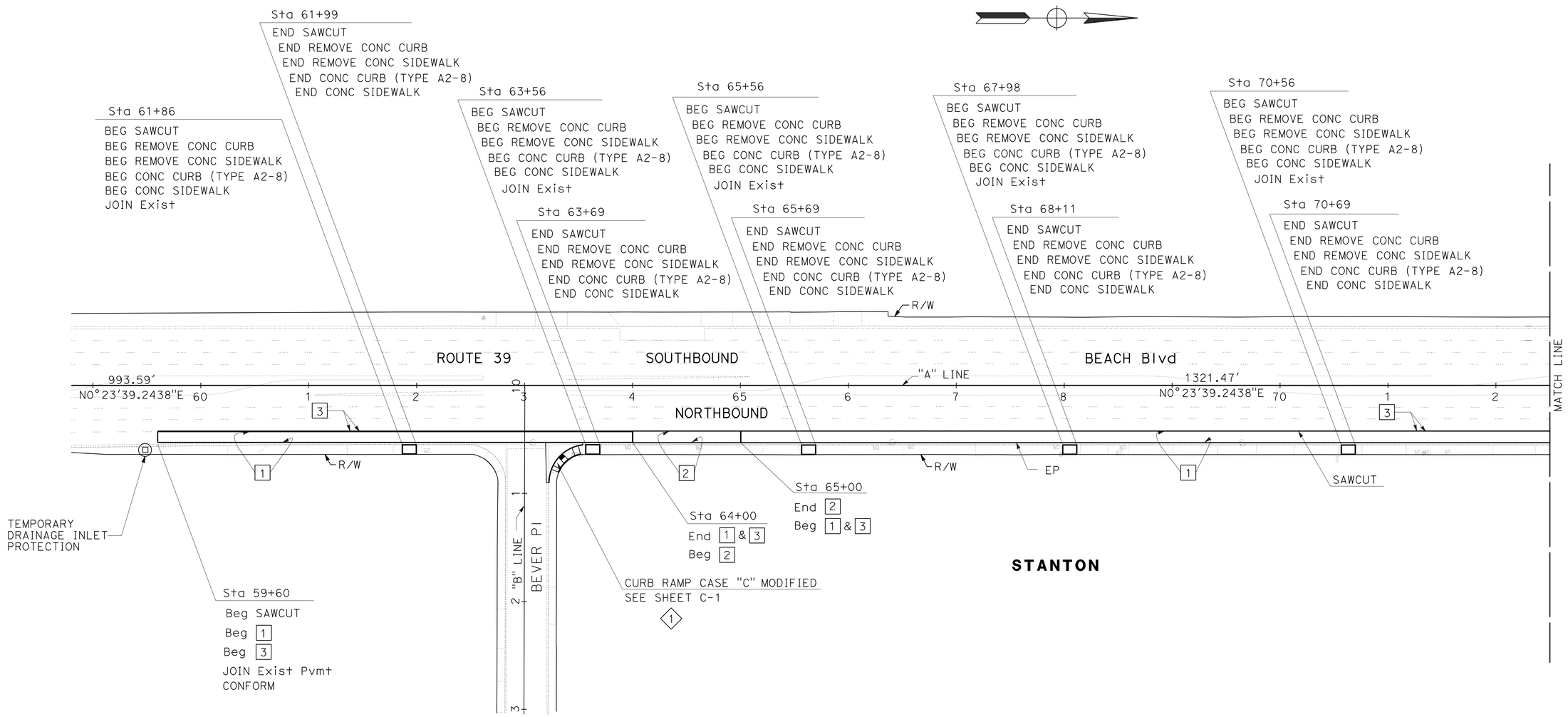

LAYOUT

SCALE: 1" = 50'

L-1

STATE OF CALIFORNIA - DEPARTMENT OF TRANSPORTATION
Caltrans® DESIGN BRANCH B

FUNCTIONAL SUPERVISOR: CHRISTOPHER LE
CALCULATED-DESIGNED BY: FARIBA A. KHOSRAVI
CHECKED BY: ALIX WILLIAMS
REVISED BY
DATE REVISED

LAST REVISION 04-27-16
DATE PLOTTED => 04-AUG-2016
TIME PLOTTED => 11:27

Dist	COUNTY	ROUTE	POST MILES TOTAL PROJECT	SHEET No.	TOTAL SHEETS
12	Ora	39	9.8/10.5	5	80

REGISTERED CIVIL ENGINEER 05-09-16 DATE

06-06-16
PLANS APPROVAL DATE

REGISTERED PROFESSIONAL ENGINEER
FARIBA A. KHOSRAVI
No. C 54265
Exp. 12/31/17
CIVIL
STATE OF CALIFORNIA

THE STATE OF CALIFORNIA OR ITS OFFICERS OR AGENTS SHALL NOT BE RESPONSIBLE FOR THE ACCURACY OR COMPLETENESS OF SCANNED COPIES OF THIS PLAN SHEET.

NOTE:

1. FOR ACCURATE RIGHT OF WAY DATA, CONTACT RIGHT OF WAY ENGINEERING AT THE DISTRICT OFFICE.

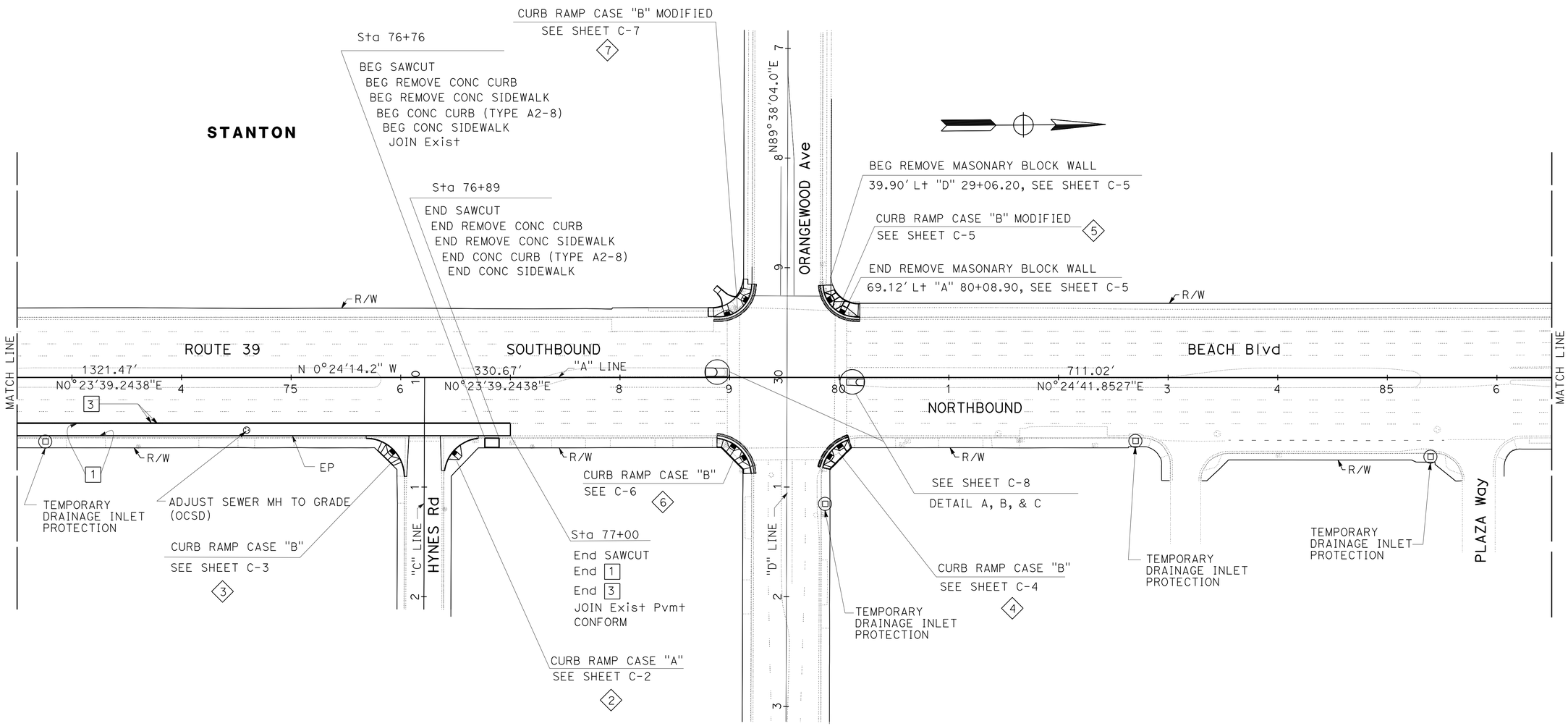

LAYOUT
SCALE: 1" = 50'

L-2

STATE OF CALIFORNIA - DEPARTMENT OF TRANSPORTATION
Caltrans® DESIGN BRANCH B
FUNCTIONAL SUPERVISOR: CHRISTOPHER LE
CALCULATED-DESIGNED BY: FARIBA A. KHOSRAVI
CHECKED BY: ALIX WILLIAMS
REVISED BY
DATE REVISED

LAST REVISION 04-28-16 | DATE PLOTTED => 04-AUG-2016 | TIME PLOTTED => 11:27

Dist	COUNTY	ROUTE	POST MILES TOTAL PROJECT	SHEET No.	TOTAL SHEETS
12	Ora	39	9.8/10.5	6	80

REGISTERED CIVIL ENGINEER 05-09-16 DATE

06-06-16
PLANS APPROVAL DATE

REGISTERED PROFESSIONAL ENGINEER
FARIBA A. KHOSRAVI
No. C 54265
Exp. 12/31/17
CIVIL
STATE OF CALIFORNIA

THE STATE OF CALIFORNIA OR ITS OFFICERS OR AGENTS SHALL NOT BE RESPONSIBLE FOR THE ACCURACY OR COMPLETENESS OF SCANNED COPIES OF THIS PLAN SHEET.

NOTES:

1. FOR ACCURATE RIGHT OF WAY DATA, CONTACT RIGHT OF WAY ENGINEERING AT THE DISTRICT OFFICE.

CURVE DATA

No. ⊕	R	Δ	T	L
1	35000′	00°51′18″	261.15′	522.29′

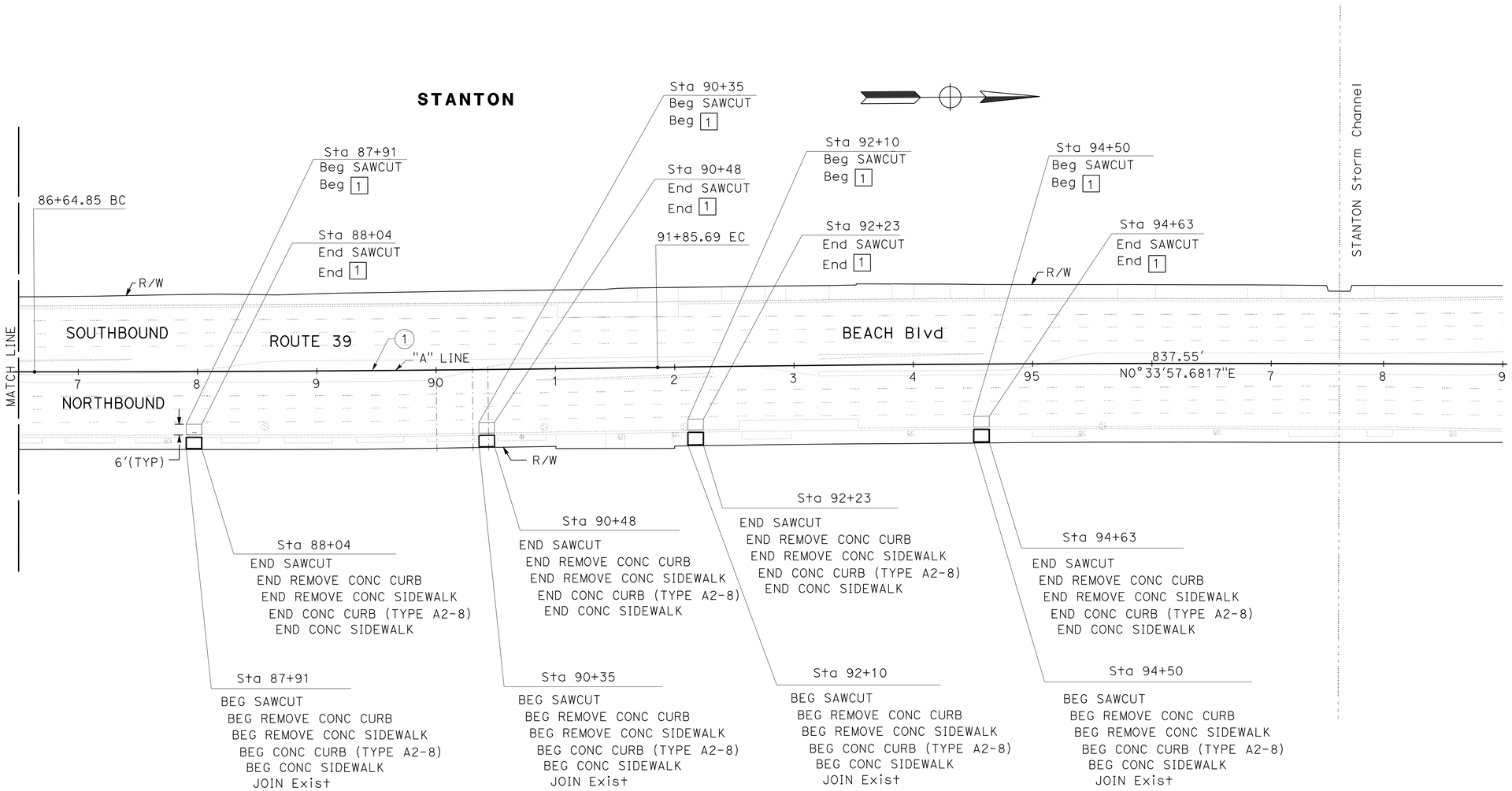

LAYOUT
SCALE: 1" = 50′

L-3

STATE OF CALIFORNIA - DEPARTMENT OF TRANSPORTATION
Caltrans® DESIGN BRANCH B
FUNCTIONAL SUPERVISOR: CHRISTOPHER LE
CALCULATED-DESIGNED BY: FARIBA A. KHOSRAVI
CHECKED BY: ALIX WILLIAMS
REVISED BY
DATE REVISED

LAST REVISION 4-28-16
DATE PLOTTED => 04-AUG-2016
TIME PLOTTED => 11:27

Dist	COUNTY	ROUTE	POST MILES TOTAL PROJECT	SHEET No.	TOTAL SHEETS
12	Ora	39	9.8/10.5	7	80

REGISTERED CIVIL ENGINEER 05-09-16 DATE

06-06-16
PLANS APPROVAL DATE

REGISTERED PROFESSIONAL ENGINEER CHARLES MAKSOUDIAN No. C63419 Exp. 9/30/16 CIVIL STATE OF CALIFORNIA

THE STATE OF CALIFORNIA OR ITS OFFICERS OR AGENTS SHALL NOT BE RESPONSIBLE FOR THE ACCURACY OR COMPLETENESS OF SCANNED COPIES OF THIS PLAN SHEET.

NOTES:

1. FOR ACCURATE RIGHT OF WAY DATA, CONTACT RIGHT OF WAY ENGINEERING AT THE DISTRICT OFFICE.
2. FOR DETAILS NOT SHOWN, SEE RSP A88A.

CURVE DATA

No. ⊕	R	Δ	T	L
1	35.50′	83°04′24"	31.45′	51.47′
2	28.50′	55°02′05"	14.85′	27.38′

LEGEND:

- [X] STRUCTURAL SECTION TYPE, SEE SHEET X-1
- (X) CURVE No.
- LIMITS OF REMOVE & REPLACE EXISTING Pvmt
- ◇X CURB RAMP No.

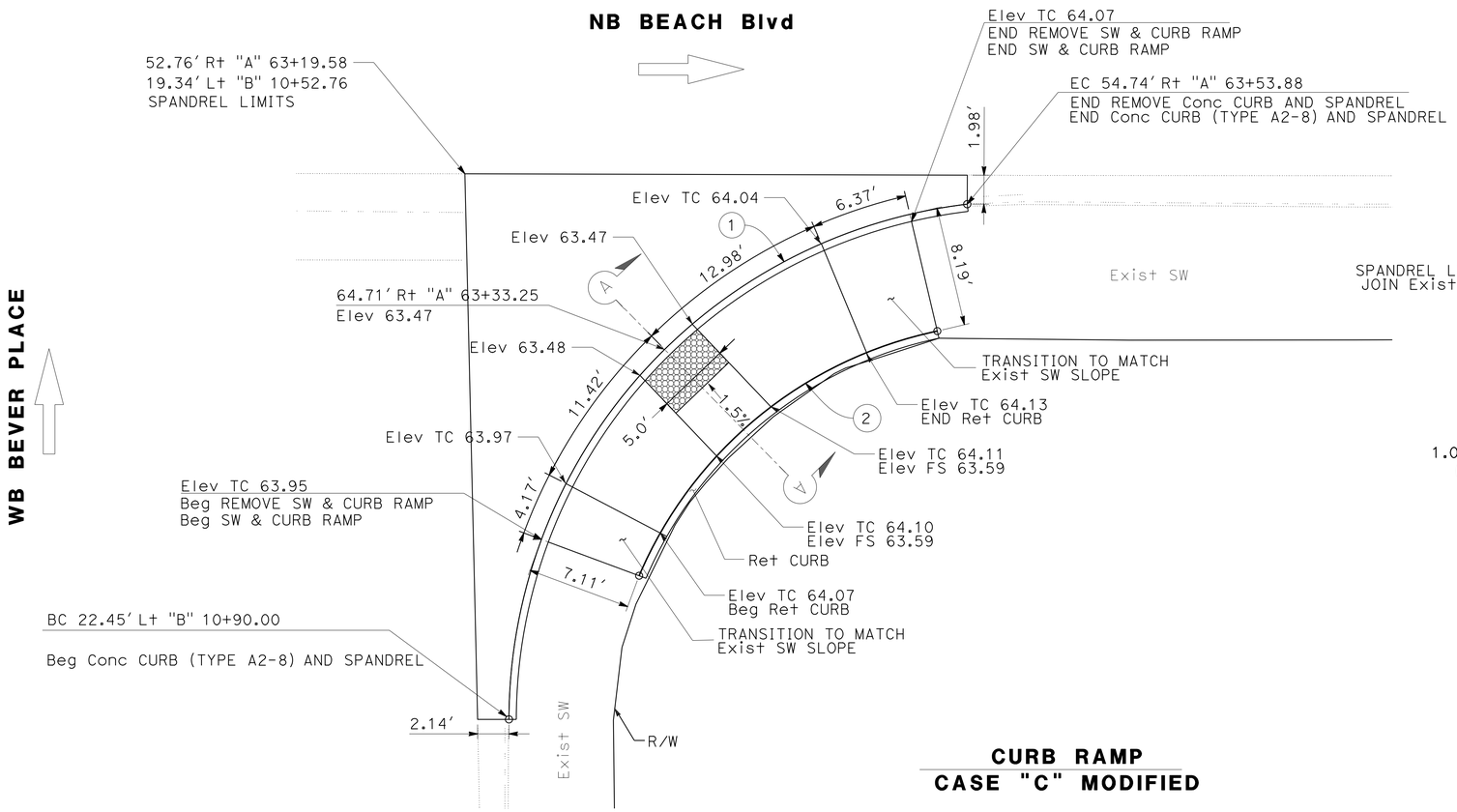

CURB RAMP
CASE "C" MODIFIED

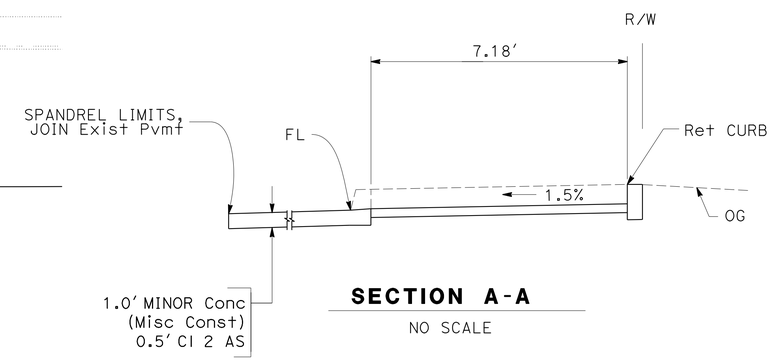

SECTION A-A
NO SCALE

CONSTRUCTION DETAILS

(CURB RAMP No. ◇1)

SCALE: 1" = 5′

C-1

STATE OF CALIFORNIA - DEPARTMENT OF TRANSPORTATION
Caltrans® **DESIGN BRANCH B**

FUNCTIONAL SUPERVISOR: CHRISTOPHER LE
CHARLES MAKSOUDIAN — ALIX WILLIAMS
CALCULATED-DESIGNED BY — CHECKED BY
REVISED BY — DATE REVISED

LAST REVISION 3-28-16 | DATE PLOTTED => 04-AUG-2016 | TIME PLOTTED => 11:27

Dist	COUNTY	ROUTE	POST MILES TOTAL PROJECT	SHEET No.	TOTAL SHEETS
12	Ora	39	9.8/10.5	8	80

REGISTERED CIVIL ENGINEER 05-09-16 DATE

06-06-16
PLANS APPROVAL DATE

REGISTERED PROFESSIONAL ENGINEER CHARLES MAKSOUDIAN No. C63419 Exp. 9/30/16 CIVIL STATE OF CALIFORNIA

THE STATE OF CALIFORNIA OR ITS OFFICERS OR AGENTS SHALL NOT BE RESPONSIBLE FOR THE ACCURACY OR COMPLETENESS OF SCANNED COPIES OF THIS PLAN SHEET.

NOTE:

1. FOR ACCURATE RIGHT OF WAY DATA, CONTACT RIGHT OF WAY ENGINEERING AT THE DISTRICT OFFICE.
2. FOR DETAILS NOT SHOWN, SEE RSP A88A and A88B.

CURVE DATA

No. ⊕	R	Δ	T	L
1	35.00′	75°36′07″	27.15′	46.18′

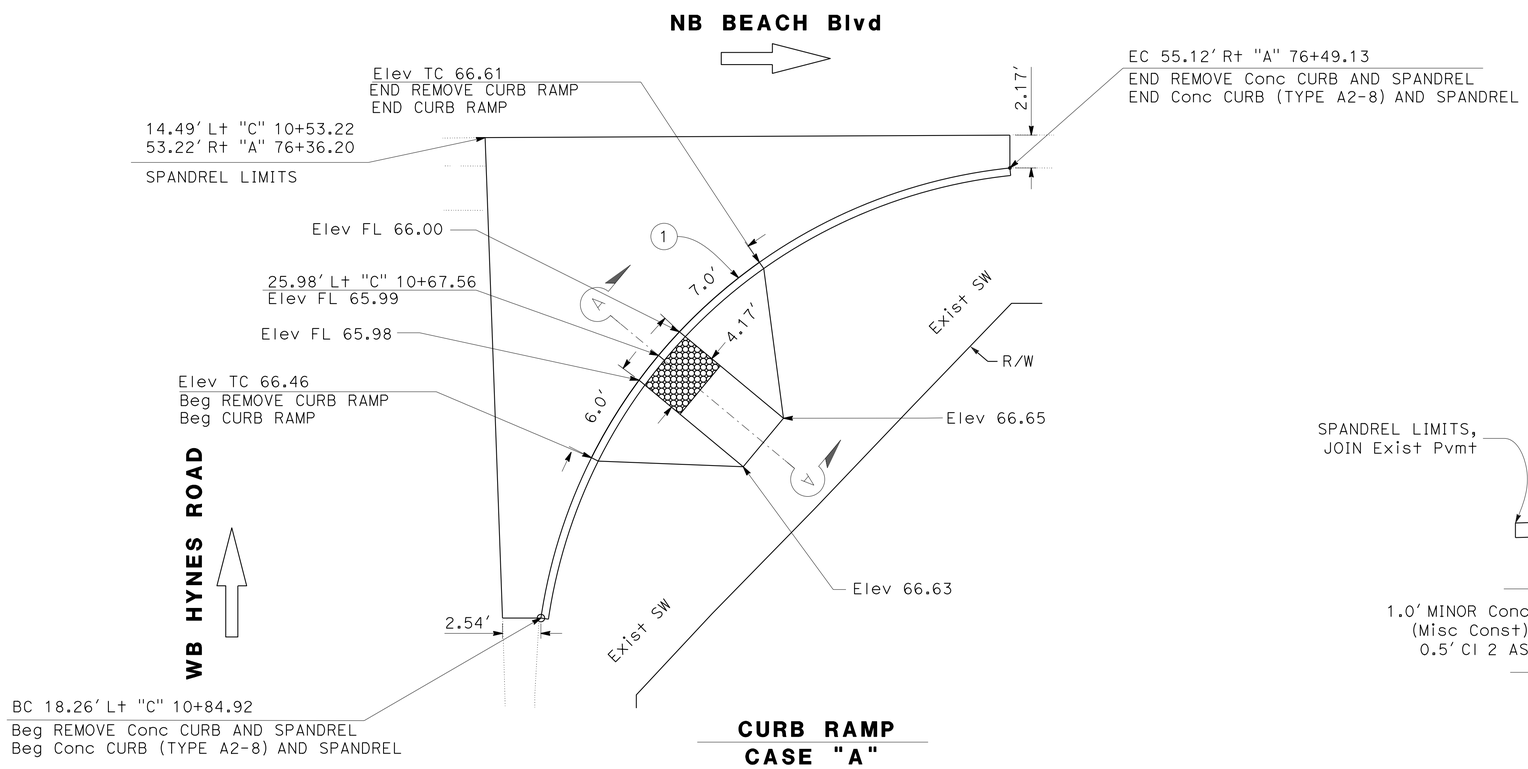

CURB RAMP
CASE "A"

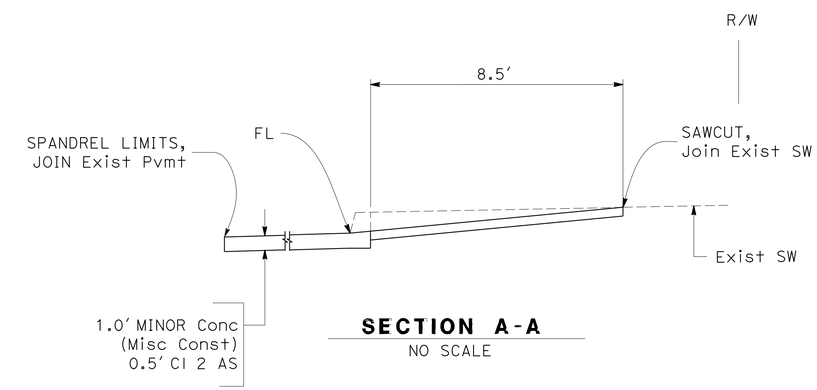

SECTION A-A
NO SCALE

CONSTRUCTION DETAILS

(CURB RAMP No. 2)

SCALE: 1" = 5′

C-2

STATE OF CALIFORNIA - DEPARTMENT OF TRANSPORTATION
Caltrans® DESIGN BRANCH B

FUNCTIONAL SUPERVISOR: CHRISTOPHER LE
CALCULATED-DESIGNED BY: CHARLES MAKSOUDIAN
CHECKED BY: ALIX WILLIAMS
REVISED BY
DATE REVISED

LAST REVISION 3-22-16
DATE PLOTTED => 04-AUG-2016
TIME PLOTTED => 11:27

Dist	COUNTY	ROUTE	POST MILES TOTAL PROJECT	SHEET No.	TOTAL SHEETS
12	Ora	39	9.8/10.5	9	80

REGISTERED CIVIL ENGINEER 05-09-16 DATE

06-06-16
PLANS APPROVAL DATE

REGISTERED PROFESSIONAL ENGINEER CHARLES MAKSOUDIAN No. C 63419 Exp. 9/30/16 CIVIL STATE OF CALIFORNIA

THE STATE OF CALIFORNIA OR ITS OFFICERS OR AGENTS SHALL NOT BE RESPONSIBLE FOR THE ACCURACY OR COMPLETENESS OF SCANNED COPIES OF THIS PLAN SHEET.

NOTE:

1. FOR ACCURATE RIGHT OF WAY DATA, CONTACT RIGHT OF WAY ENGINEERING AT THE DISTRICT OFFICE.
2. FOR DETAILS NOT SHOWN, SEE RSP A88A and A88B.

CURVE DATA

No. ⊕	R	Δ	T	L
1	35.00′	89°58′16″	34.98′	54.96′

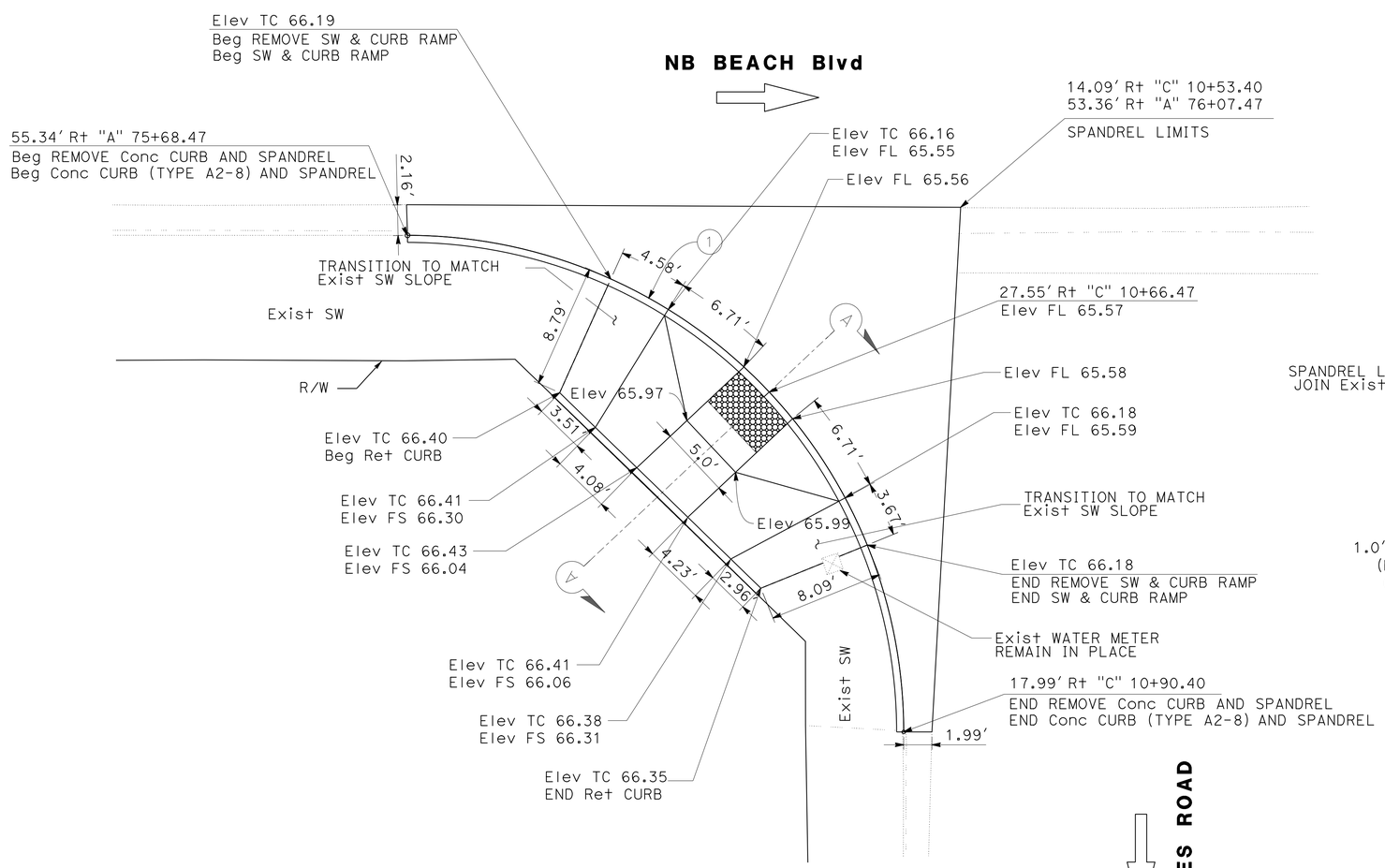

CURB RAMP
CASE "B"

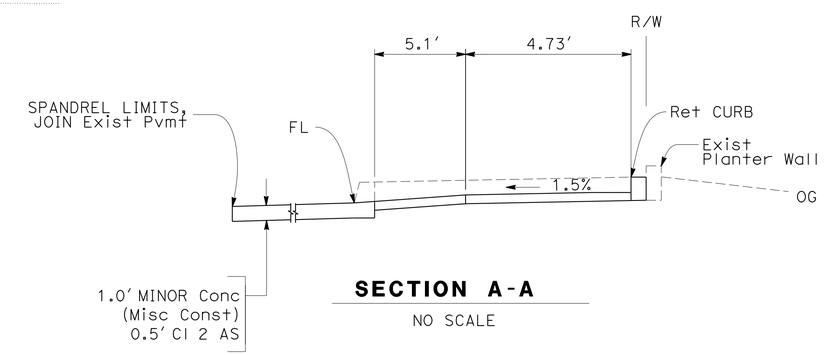

SECTION A-A
NO SCALE

CONSTRUCTION DETAILS

(CURB RAMP No. 3)

SCALE: 1" = 5′

C-3

STATE OF CALIFORNIA - DEPARTMENT OF TRANSPORTATION
Caltrans® **DESIGN BRANCH B**
FUNCTIONAL SUPERVISOR: CHRISTOPHER LE
CALCULATED-DESIGNED BY: ALIX WILLIAMS
CHECKED BY: CHARLES MAKSOUDIAN
REVISED BY
DATE REVISED

LAST REVISION 3-22-16
DATE PLOTTED => 04-AUG-2016
TIME PLOTTED => 11:27

Dist	COUNTY	ROUTE	POST MILES TOTAL PROJECT	SHEET No.	TOTAL SHEETS
12	Ora	39	9.8/10.5	10	80

REGISTERED CIVIL ENGINEER 05-09-16 DATE

06-06-16
PLANS APPROVAL DATE

REGISTERED PROFESSIONAL ENGINEER CHARLES MAKSOUDIAN No. C63419 Exp. 9/30/16 CIVIL STATE OF CALIFORNIA

THE STATE OF CALIFORNIA OR ITS OFFICERS OR AGENTS SHALL NOT BE RESPONSIBLE FOR THE ACCURACY OR COMPLETENESS OF SCANNED COPIES OF THIS PLAN SHEET.

NOTE:

1. FOR ACCURATE RIGHT OF WAY DATA, CONTACT RIGHT OF WAY ENGINEERING AT THE DISTRICT OFFICE.
2. FOR DETAILS NOT SHOWN, SEE RSP A88A and A88B.

CURVE DATA

No. ⊕	R	Δ	T	L
1	35.00′	60°17′46″	20.33′	36.83′

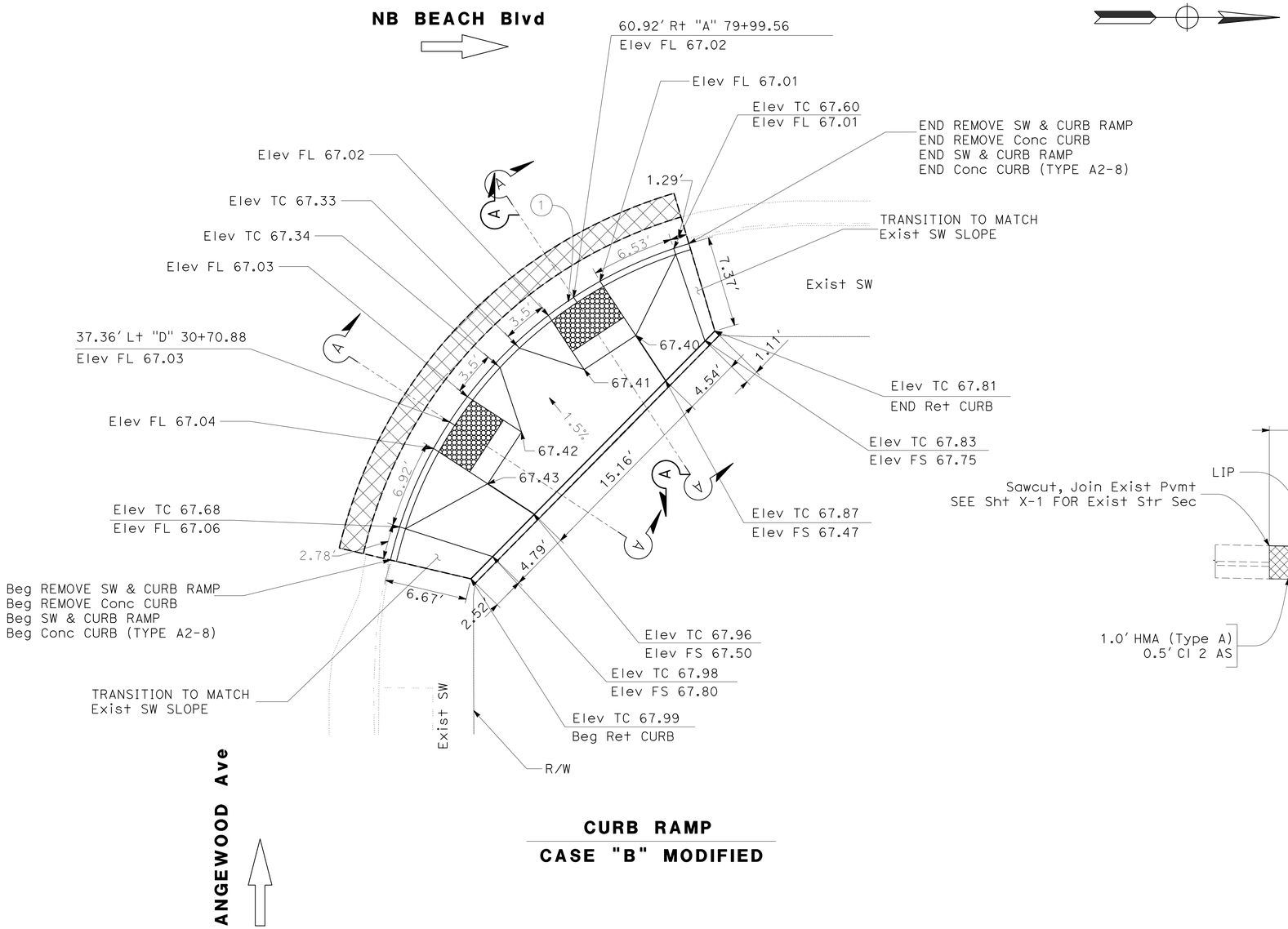

CURB RAMP

CASE "B" MODIFIED

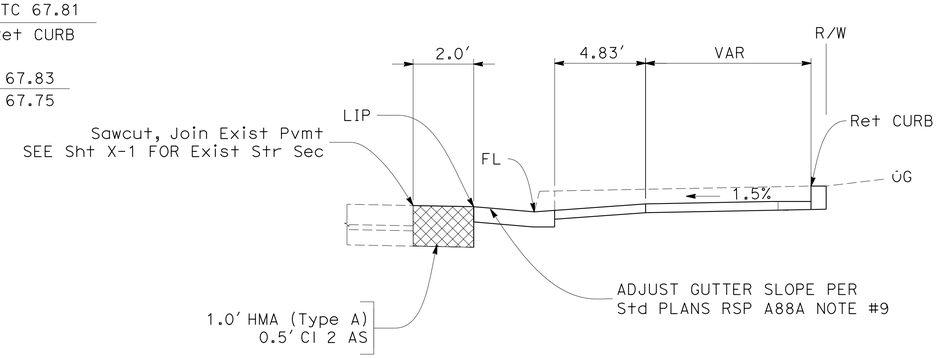

SECTION A-A

NO SCALE

CONSTRUCTION DETAILS

(CURB RAMP No. 4)

SCALE: 1" = 5′

C-4

STATE OF CALIFORNIA - DEPARTMENT OF TRANSPORTATION
Caltrans® DESIGN BRANCH B

FUNCTIONAL SUPERVISOR: CHRISTOPHER LE
CALCULATED-DESIGNED BY: CHARLES MAKSOUDIAN
CHECKED BY: ALIX WILLIAMS
REVISED BY
DATE REVISED

LAST REVISION 04-AUG-2016 DATE PLOTTED => 04-AUG-2016 TIME PLOTTED => 11:27

Dist	COUNTY	ROUTE	POST MILES TOTAL PROJECT	SHEET No.	TOTAL SHEETS
12	Ora	39	9.8/10.5	11	80

REGISTERED CIVIL ENGINEER 05-09-16 DATE

06-06-16
PLANS APPROVAL DATE

REGISTERED PROFESSIONAL ENGINEER CHARLES MAKSOUDIAN No. C63419 Exp. 9/30/16 CIVIL STATE OF CALIFORNIA

THE STATE OF CALIFORNIA OR ITS OFFICERS OR AGENTS SHALL NOT BE RESPONSIBLE FOR THE ACCURACY OR COMPLETENESS OF SCANNED COPIES OF THIS PLAN SHEET.

NOTE:

1. FOR ACCURATE RIGHT OF WAY DATA, CONTACT RIGHT OF WAY ENGINEERING AT THE DISTRICT OFFICE.
2. FOR DETAILS NOT SHOWN, SEE RSP A88A and A88B.

CURVE DATA

No. ⊕	R	Δ	T	L
1	30.00′	85°47′26″	27.87′	44.92′
2	25.50′	59°58′50″	14.72′	26.69′

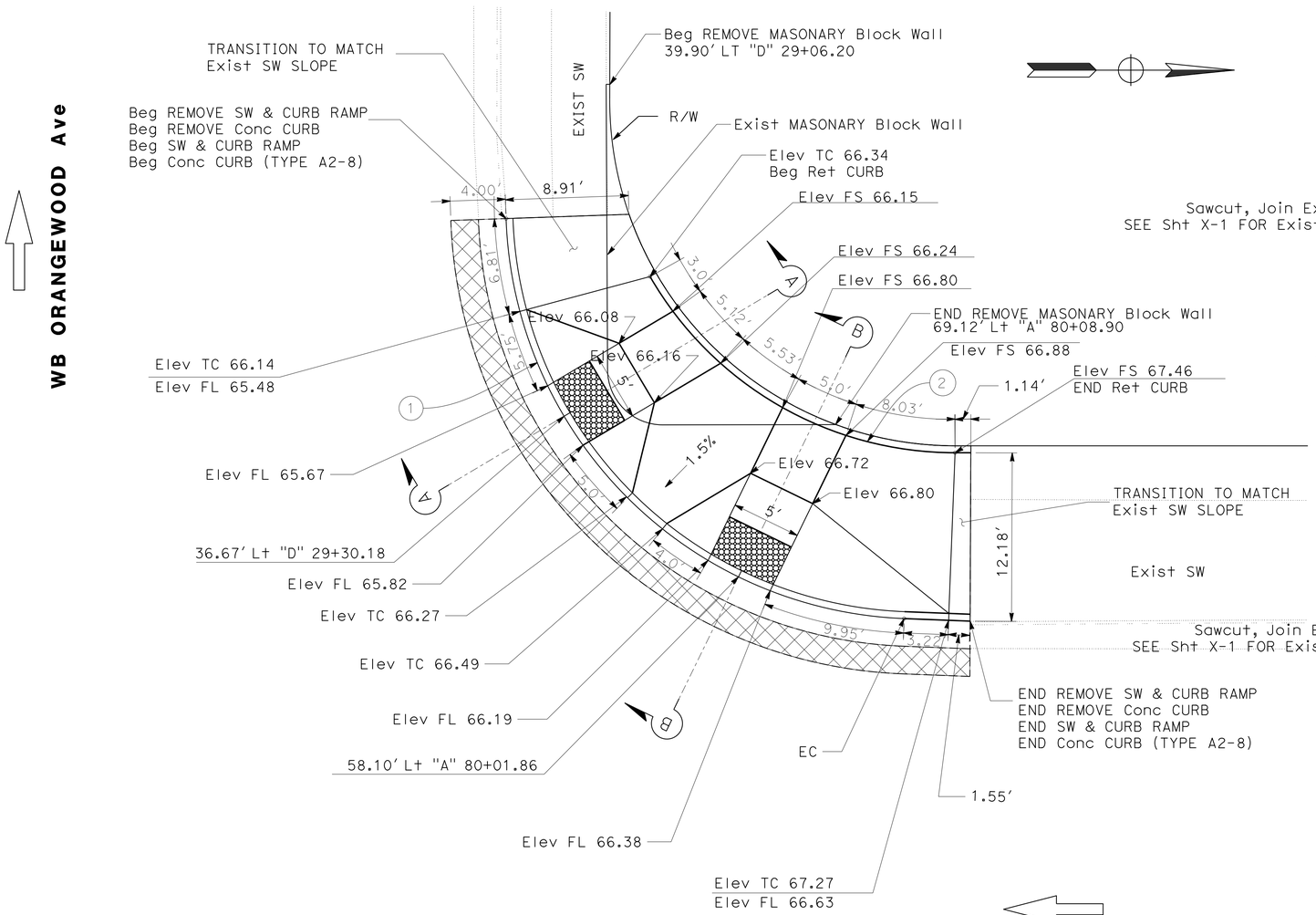

CURB RAMP
CASE "B" MODIFIED

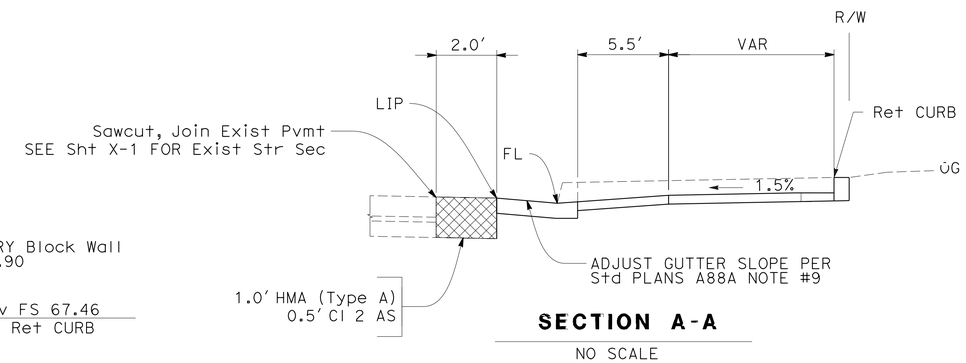

SECTION A-A
NO SCALE

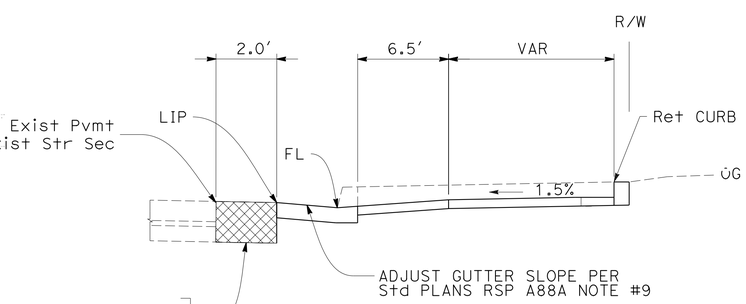

SECTION B-B
NO SCALE

CONSTRUCTION DETAILS
(CURB RAMP No. 5)

SCALE: 1" = 5′

C-5

STATE OF CALIFORNIA - DEPARTMENT OF TRANSPORTATION
Caltrans® DESIGN BRANCH B
FUNCTIONAL SUPERVISOR: CHRISTOPHER LE
CALCULATED-DESIGNED BY: ALIX WILLIAMS
CHECKED BY: CHARLES MAKSOUDIAN
REVISED BY / DATE REVISED

LAST REVISION 01-26-16 | DATE PLOTTED => 04-AUG-2016 | TIME PLOTTED => 11:27

Dist	COUNTY	ROUTE	POST MILES TOTAL PROJECT	SHEET No.	TOTAL SHEETS
12	Ora	39	9.8/10.5	12	80

REGISTERED CIVIL ENGINEER 05-09-16 DATE

06-06-16
PLANS APPROVAL DATE

REGISTERED PROFESSIONAL ENGINEER CHARLES MAKSOUDIAN No. C63419 Exp. 9/30/16 CIVIL STATE OF CALIFORNIA

THE STATE OF CALIFORNIA OR ITS OFFICERS OR AGENTS SHALL NOT BE RESPONSIBLE FOR THE ACCURACY OR COMPLETENESS OF SCANNED COPIES OF THIS PLAN SHEET.

NOTE:

1. FOR ACCURATE RIGHT OF WAY DATA, CONTACT RIGHT OF WAY ENGINEERING AT THE DISTRICT OFFICE.
2. FOR DETAILS NOT SHOWN, SEE RSP A88A and A88B.

CURVE DATA

No. ⊕	R	Δ	T	L
1	35.00′	79°53′03″	29.31′	48.80′

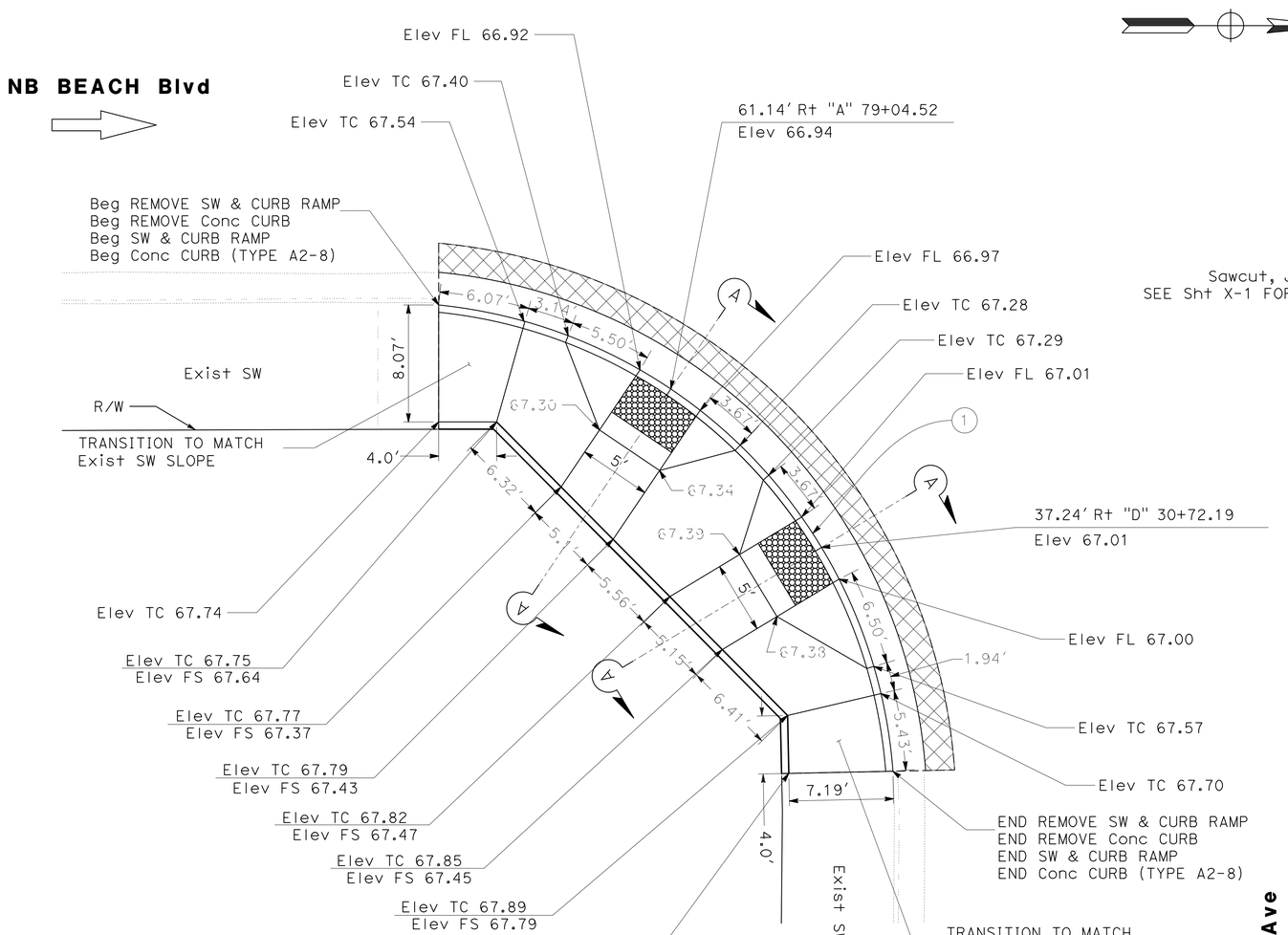

CURB RAMP
CASE "B"

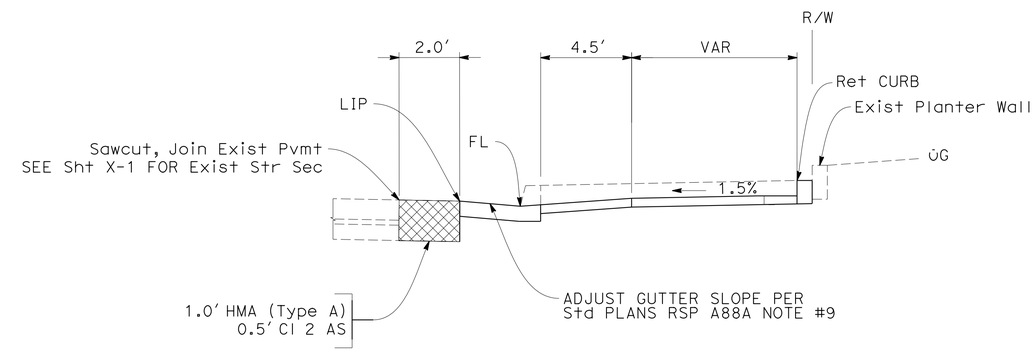

SECTION A-A
NO SCALE

CONSTRUCTION DETAILS

(CURB RAMP No. 6)

SCALE: 1" = 5′

C-6

STATE OF CALIFORNIA - DEPARTMENT OF TRANSPORTATION
Caltrans® **DESIGN BRANCH B**
FUNCTIONAL SUPERVISOR: CHRISTOPHER LE
CALCULATED-DESIGNED BY: CHARLES MAKSOUDIAN
CHECKED BY: ALIX WILLIAMS
REVISED BY / DATE REVISED

LAST REVISION 1-26-16
DATE PLOTTED => 04-AUG-2016
TIME PLOTTED => 11:27

Dist	COUNTY	ROUTE	POST MILES TOTAL PROJECT	SHEET No.	TOTAL SHEETS
12	Ora	39	9.8/10.5	13	80

REGISTERED CIVIL ENGINEER 05-09-16 DATE

06-06-16
PLANS APPROVAL DATE

REGISTERED PROFESSIONAL ENGINEER CHARLES MAKSOUDIAN No. C63419 Exp. 9/30/16 CIVIL STATE OF CALIFORNIA

THE STATE OF CALIFORNIA OR ITS OFFICERS OR AGENTS SHALL NOT BE RESPONSIBLE FOR THE ACCURACY OR COMPLETENESS OF SCANNED COPIES OF THIS PLAN SHEET.

NOTE:

1. FOR ACCURATE RIGHT OF WAY DATA, CONTACT RIGHT OF WAY ENGINEERING AT THE DISTRICT OFFICE.
2. FOR DETAILS NOT SHOWN, SEE RSP A88A and A88B.

CURVE DATA

No. ⊕	R	Δ	T	L
1	30.00′	90°00′00″	30.00′	47.12′
2	29.70′	64°33′42″	18.76′	33.46′
3	13.50′	54°08′10″	6.90′	12.76′
4	17.00′	36°24′57″	5.59′	10.80′

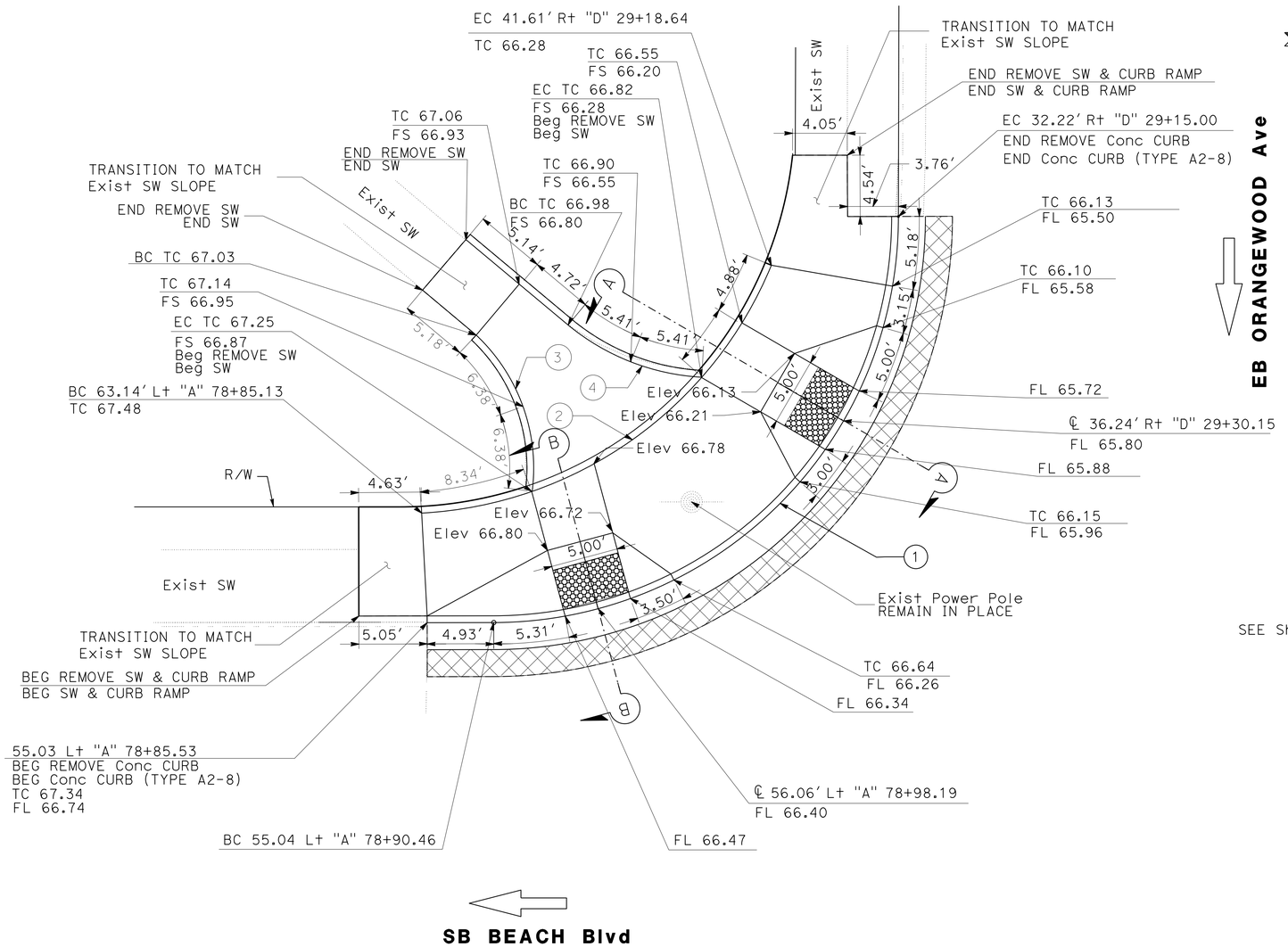

CURB RAMP

CASE "B" MODIFIED

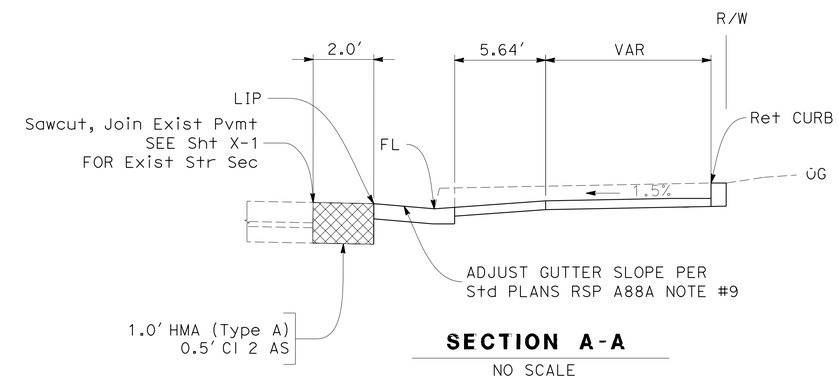

SECTION A-A

NO SCALE

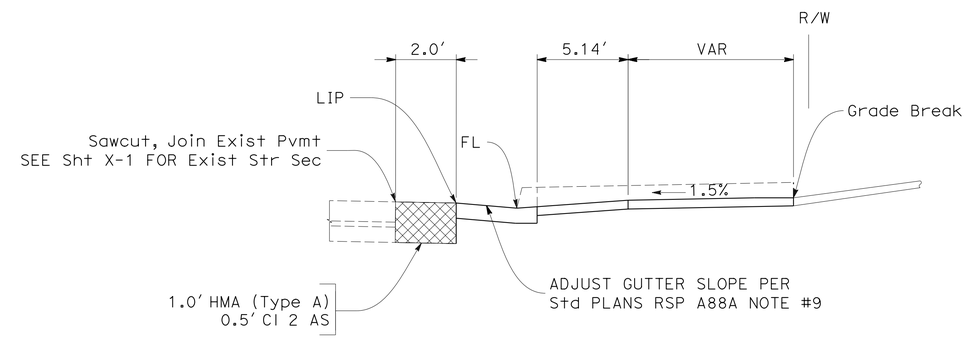

SECTION B-B

NO SCALE

CONSTRUCTION DETAILS

(CURB RAMP No. 7)

SCALE: 1" = 5′

C-7

STATE OF CALIFORNIA - DEPARTMENT OF TRANSPORTATION
Caltrans® DESIGN BRANCH B
FUNCTIONAL SUPERVISOR: CHRISTOPHER LE
CALCULATED-DESIGNED BY: CHARLES MAKSOUDIAN
CHECKED BY: ALIX WILLIAMS
REVISED BY / DATE REVISED

LAST REVISION 3-22-16
DATE PLOTTED => 04-AUG-2016
TIME PLOTTED => 11:27

Dist	COUNTY	ROUTE	POST MILES TOTAL PROJECT	SHEET No.	TOTAL SHEETS
12	Ora	39	9.8/10.5	14	80

REGISTERED CIVIL ENGINEER 05-09-16 DATE

06-06-16
PLANS APPROVAL DATE

REGISTERED PROFESSIONAL ENGINEER FARIBA A. KHOSRAVI No. C54265 Exp. 12/31/17 CIVIL STATE OF CALIFORNIA

THE STATE OF CALIFORNIA OR ITS OFFICERS OR AGENTS SHALL NOT BE RESPONSIBLE FOR THE ACCURACY OR COMPLETENESS OF SCANNED COPIES OF THIS PLAN SHEET.

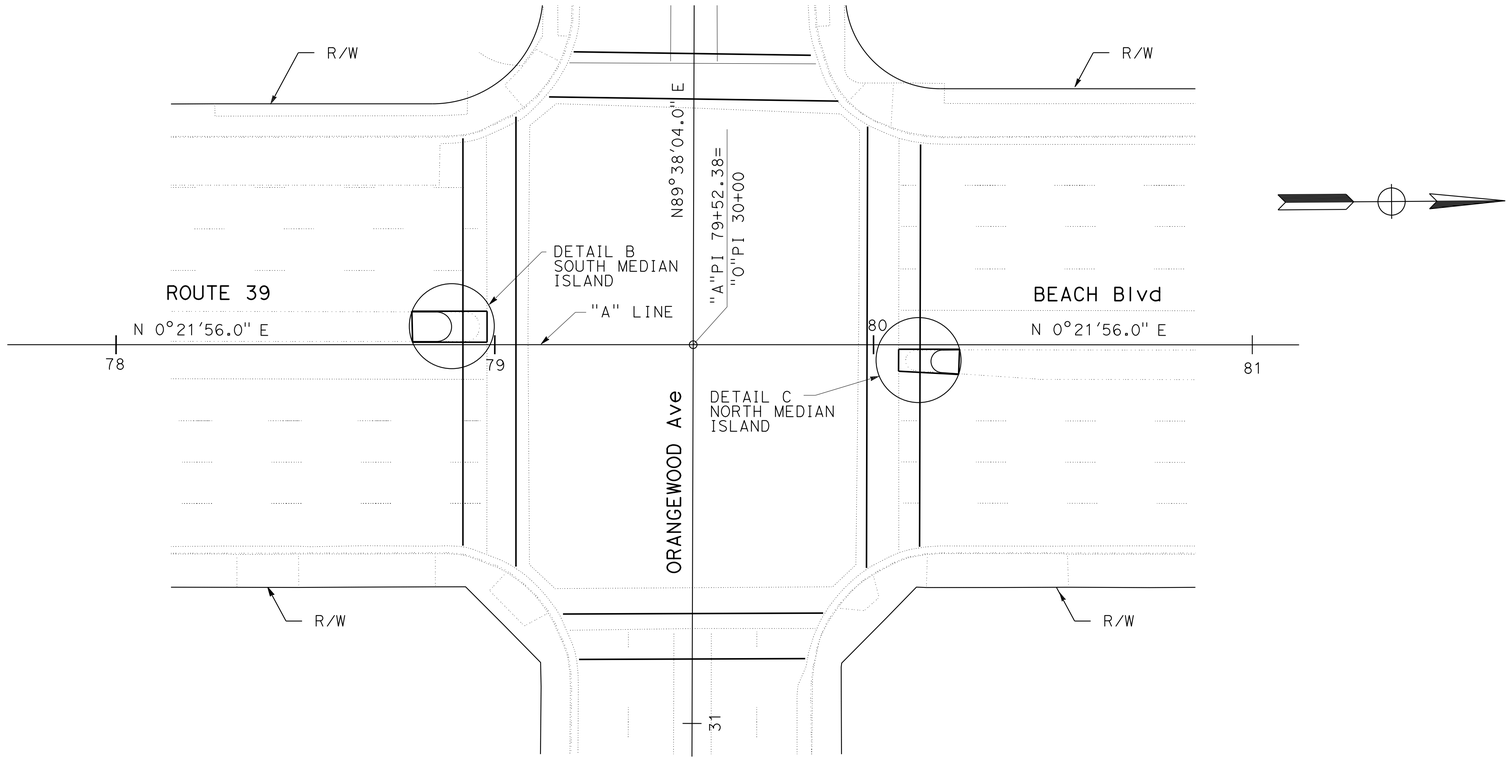

DETAIL A

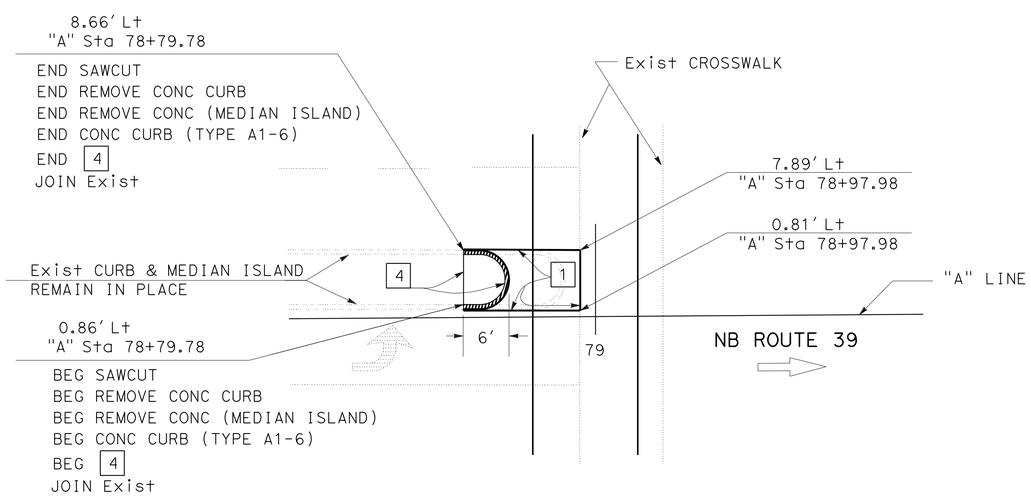

DETAIL B

"A"Sta 78+79.78 to "A"Sta 78+97.98

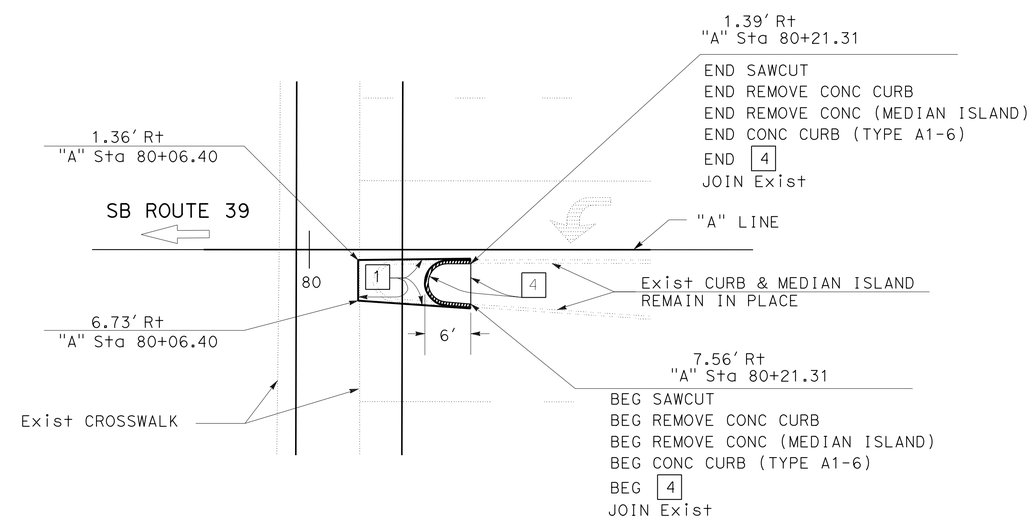

DETAIL C

"A"Sta 80+06.40 to "A"Sta 80+21.31

CONSTRUCTION DETAILS
(MEDIAN ISLAND)

NO SCALE

C-8

STATE OF CALIFORNIA - DEPARTMENT OF TRANSPORTATION
Caltrans DESIGN BRANCH B

FUNCTIONAL SUPERVISOR: CHRISTOPHER LE
CALCULATED-DESIGNED BY: ALIX WILLIAMS
CHECKED BY: FARIBA A. KHOSRAVI
REVISED BY
DATE REVISED

LAST REVISION 05-23-16 | DATE PLOTTED => 04-AUG-2016 | TIME PLOTTED => 11:27

Dist	COUNTY	ROUTE	POST MILES TOTAL PROJECT	SHEET No.	TOTAL SHEETS
12	Ora	39	9.8/10.5	15	80

REGISTERED CIVIL ENGINEER 05-09-16 DATE

06-06-16
PLANS APPROVAL DATE

REGISTERED PROFESSIONAL ENGINEER
SUNIL GUPTA
No. C 42195
Exp. 3/31/18
CIVIL
STATE OF CALIFORNIA

THE STATE OF CALIFORNIA OR ITS OFFICERS OR AGENTS SHALL NOT BE RESPONSIBLE FOR THE ACCURACY OR COMPLETENESS OF SCANNED COPIES OF THIS PLAN SHEET.

NOTES:

1. FOR ACCURATE RIGHT OF WAY DATA, CONTACT RIGHT OF WAY ENGINEERING AT THE DISTRICT OFFICE.
2. ALL EXISTING DRAINAGE SYSTEMS MUST REMAIN IN PLACE UNLESS OTHERWISE SHOWN IN PLAN

LEGEND:

[1] CURVE NUMBER

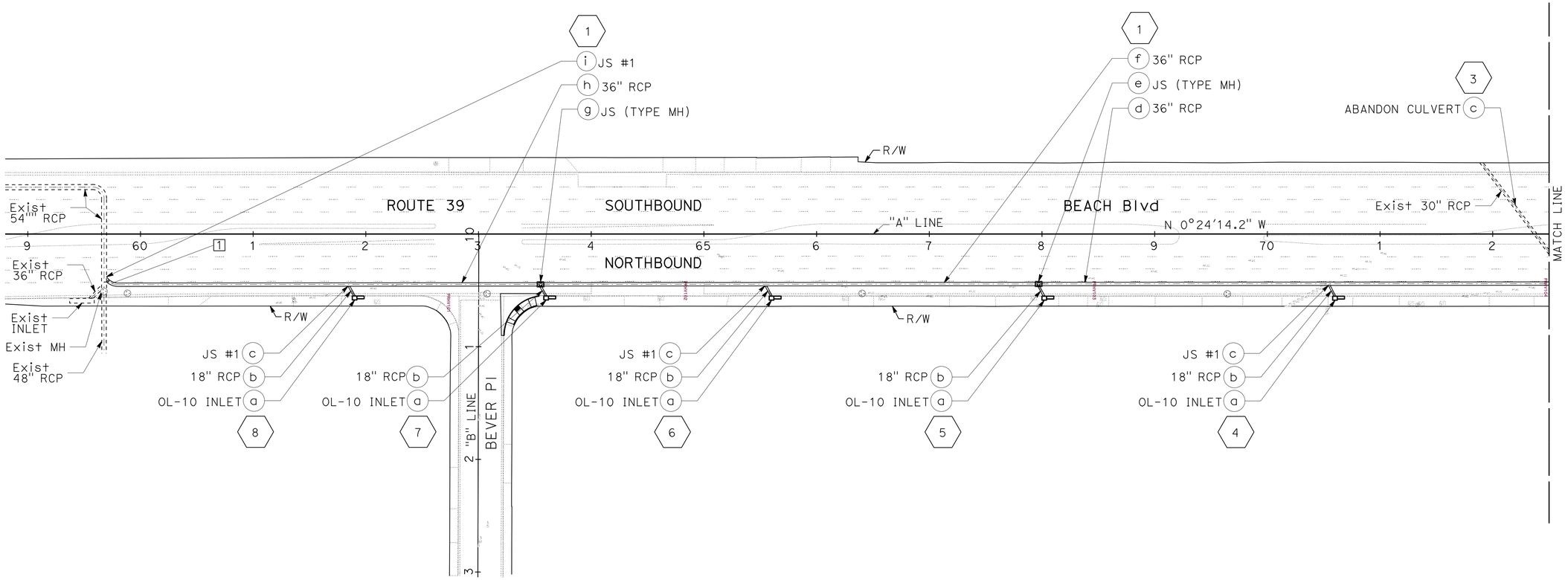

CURVE DATA

NO	R	△	T	L
[1]	13.36′	48°52′12′	11.39′	6.07′

DRAINAGE PLAN

SCALE: 1" = 50′

APPROVED FOR DRAINAGE WORK ONLY

D-1

STATE OF CALIFORNIA - DEPARTMENT OF TRANSPORTATION
Caltrans
HYDRAULICS

FUNCTIONAL SUPERVISOR: PHI DINH
CALCULATED-DESIGNED BY: SUNIL GUPTA
CHECKED BY: PHI DINH
REVISED BY
DATE REVISED

LAST REVISION 11-04-15
DATE PLOTTED => 04-AUG-2016
TIME PLOTTED => 11:27

Dist	COUNTY	ROUTE	POST MILES TOTAL PROJECT	SHEET No.	TOTAL SHEETS
12	Ora	39	9.8/10.5	16	80

REGISTERED CIVIL ENGINEER 05-09-16 DATE

06-06-16
PLANS APPROVAL DATE

REGISTERED PROFESSIONAL ENGINEER
SUNIL GUPTA
No. C 42195
Exp. 3/31/18
CIVIL
STATE OF CALIFORNIA

THE STATE OF CALIFORNIA OR ITS OFFICERS OR AGENTS SHALL NOT BE RESPONSIBLE FOR THE ACCURACY OR COMPLETENESS OF SCANNED COPIES OF THIS PLAN SHEET.

NOTES:

1. FOR ACCURATE RIGHT OF WAY DATA, CONTACT RIGHT OF WAY ENGINEERING AT THE DISTRICT OFFICE.

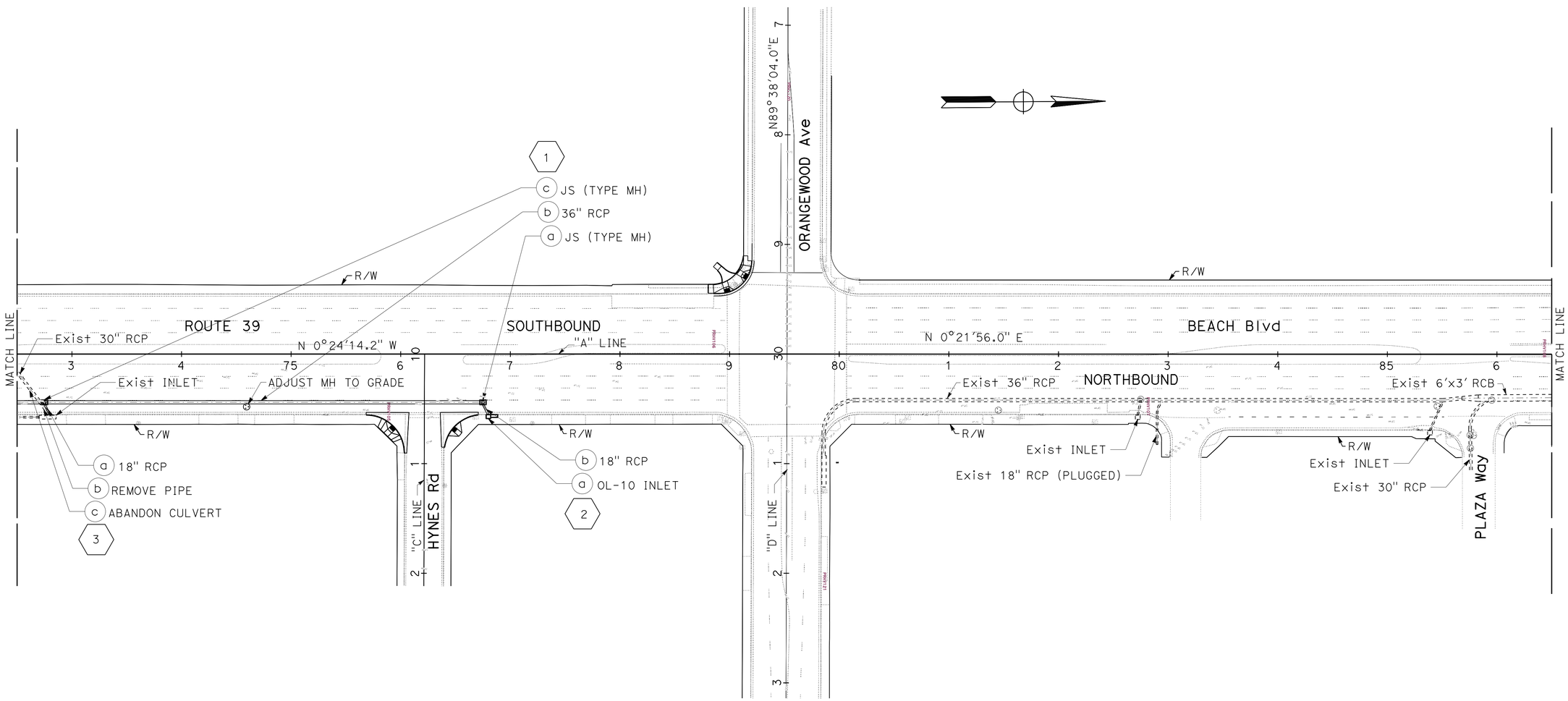

DRAINAGE PLAN

SCALE 1":50'

APPROVED FOR DRAINAGE WORK ONLY

D-2

REVISED BY	DATE REVISED

CALCULATED-DESIGNED BY: SUNIL GUPTA
CHECKED BY: PHI DINH
FUNCTIONAL SUPERVISOR: PHI DINH

STATE OF CALIFORNIA - DEPARTMENT OF TRANSPORTATION
Caltrans
HYDRAULICS

LAST REVISION 11-04-15
DATE PLOTTED => 04-AUG-2016
TIME PLOTTED => 11:27

Dist	COUNTY	ROUTE	POST MILES TOTAL PROJECT	SHEET No.	TOTAL SHEETS
12	Ora	39	9.8/10.5	17	80

REGISTERED CIVIL ENGINEER 05-09-16 DATE

06-06-16
PLANS APPROVAL DATE

REGISTERED PROFESSIONAL ENGINEER
SUNIL GUPTA
No. C 42195
Exp. 3/31/18
CIVIL
STATE OF CALIFORNIA

THE STATE OF CALIFORNIA OR ITS OFFICERS OR AGENTS SHALL NOT BE RESPONSIBLE FOR THE ACCURACY OR COMPLETENESS OF SCANNED COPIES OF THIS PLAN SHEET.

NOTES:

1. FOR ACCURATE RIGHT OF WAY DATA, CONTACT RIGHT OF WAY ENGINEERING AT THE DISTRICT OFFICE.

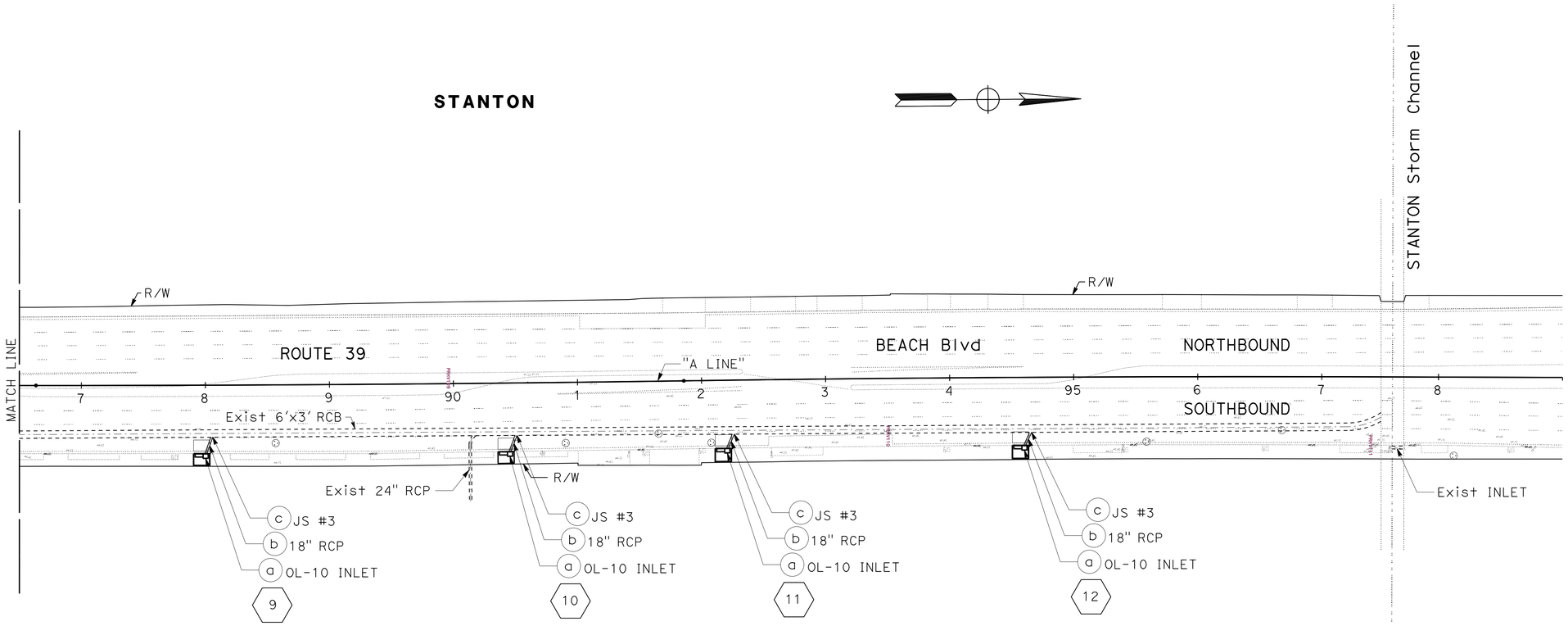

DRAINAGE PLAN

SCALE: 1" = 50'

APPROVED FOR DRAINAGE WORK ONLY

D-3

STATE OF CALIFORNIA - DEPARTMENT OF TRANSPORTATION
Caltrans
HYDRAULICS

FUNCTIONAL SUPERVISOR: PHI DINH
CALCULATED-DESIGNED BY: SUNIL GUPTA
CHECKED BY: PHI DINH
REVISED BY
DATE REVISED

LAST REVISION 11-04-15
DATE PLOTTED => 04-AUG-2016
TIME PLOTTED => 11:27

Dist	COUNTY	ROUTE	POST MILES TOTAL PROJECT	SHEET No.	TOTAL SHEETS
12	Ora	39	9.8/10.5	18	80

REGISTERED CIVIL ENGINEER 05-09-16 DATE

06-06-16
PLANS APPROVAL DATE

REGISTERED PROFESSIONAL ENGINEER SUNIL GUPTA No. C42195 Exp.03/31/18 CIVIL STATE OF CALIFORNIA

THE STATE OF CALIFORNIA OR ITS OFFICERS OR AGENTS SHALL NOT BE RESPONSIBLE FOR THE ACCURACY OR COMPLETENESS OF SCANNED COPIES OF THIS PLAN SHEET.

DRAINAGE SYSTEM No. 1

DRAINAGE PROFILE

SCALE: HORIZ 1" = 40'
VERT 1" = 5'

DP-1

STATION		TOTAL
CY	Exc	
	Emb	

STATE OF CALIFORNIA - DEPARTMENT OF TRANSPORTATION
Caltrans
HYDRAULICS

FUNCTIONAL SUPERVISOR: PHI DINH
CALCULATED-DESIGNED BY: SUNIL GUPTA
CHECKED BY: PHI DINH
REVISED BY
DATE REVISED

LAST REVISION 11-04-15
DATE PLOTTED => 04-AUG-2016
TIME PLOTTED => 11:27

Dist	COUNTY	ROUTE	POST MILES TOTAL PROJECT	SHEET No.	TOTAL SHEETS
12	Ora	39	9.8/10.5	19	80

REGISTERED CIVIL ENGINEER 05-09-16 DATE

06-06-16
PLANS APPROVAL DATE

REGISTERED PROFESSIONAL ENGINEER SUNIL GUPTA No. C42195 Exp.03/31/18 CIVIL STATE OF CALIFORNIA

THE STATE OF CALIFORNIA OR ITS OFFICERS OR AGENTS SHALL NOT BE RESPONSIBLE FOR THE ACCURACY OR COMPLETENESS OF SCANNED COPIES OF THIS PLAN SHEET.

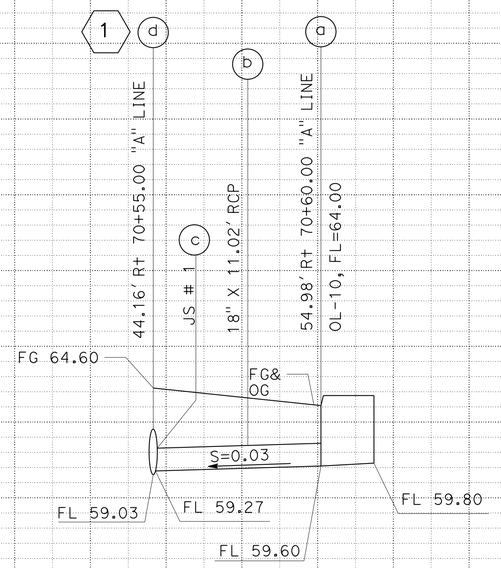

DRAINAGE SYSTEM No. 4

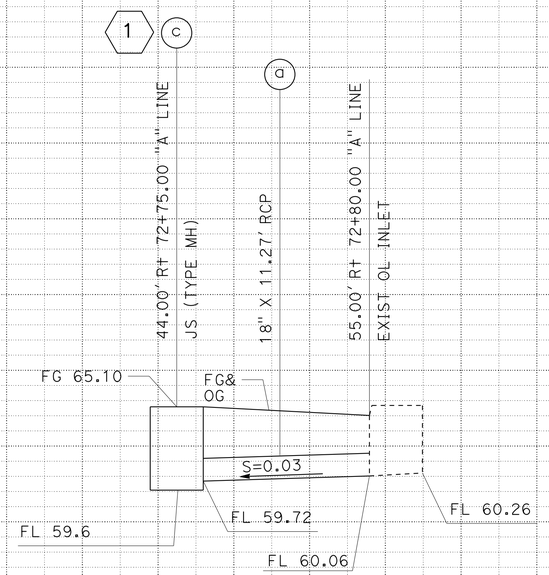

DRAINAGE SYSTEM No. 3

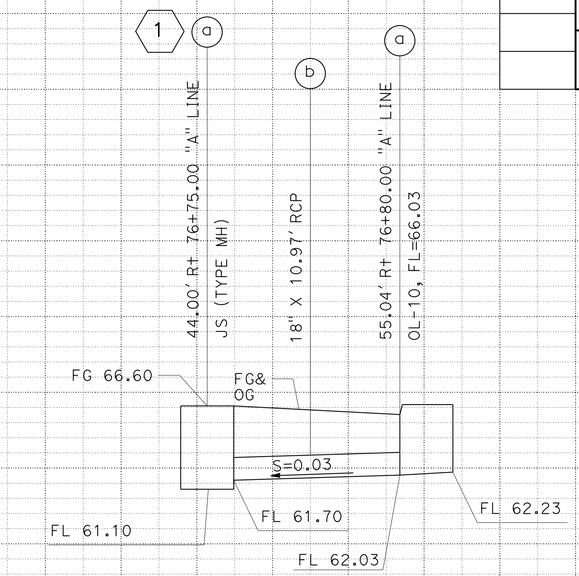

DRAINAGE SYSTEM No. 2

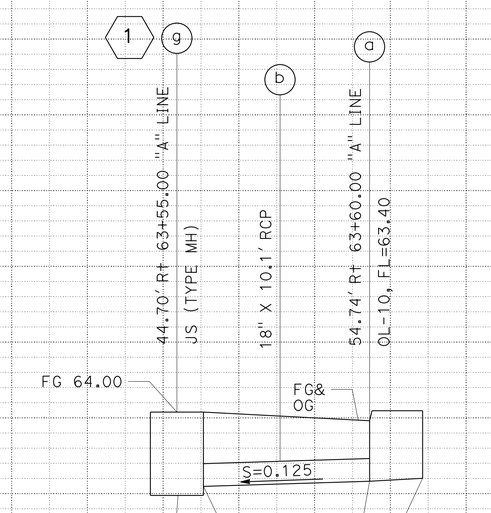

DRAINAGE SYSTEM No. 7

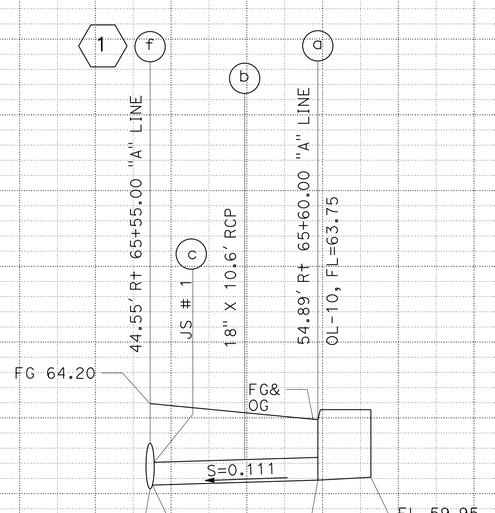

DRAINAGE SYSTEM No. 6

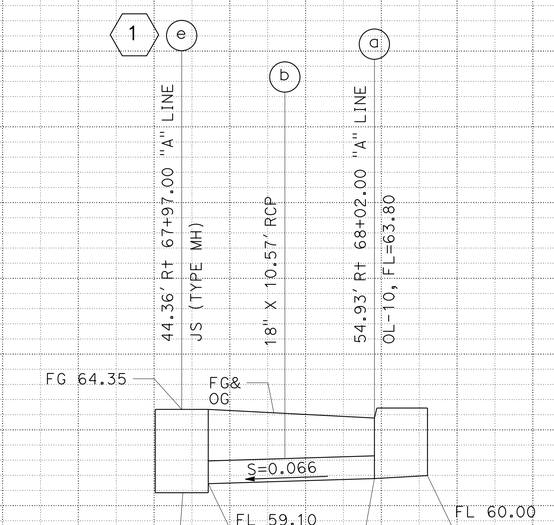

DRAINAGE SYSTEM No. 5

DRAINAGE PROFILE

SCALE: HORIZ 1" = 5'
VERT 1" = 5'

DP-2

STATION		TOTAL
CY	Exc	
	Emb	

STATE OF CALIFORNIA - DEPARTMENT OF TRANSPORTATION
Caltrans
HYDRAULICS

FUNCTIONAL SUPERVISOR: PHI DINH
CALCULATED-DESIGNED BY: SUNIL GUPTA
CHECKED BY: PHI DINH
REVISED BY
DATE REVISED

LAST REVISION 11-04-15
DATE PLOTTED => 04-AUG-2016
TIME PLOTTED => 11:27

Dist	COUNTY	ROUTE	POST MILES TOTAL PROJECT	SHEET No.	TOTAL SHEETS
12	Ora	39	9.8/10.5	20	80

REGISTERED CIVIL ENGINEER 05-09-16 DATE

06-06-16
PLANS APPROVAL DATE

REGISTERED PROFESSIONAL ENGINEER SUNIL GUPTA No. C42195 Exp.03/31/18 CIVIL STATE OF CALIFORNIA

THE STATE OF CALIFORNIA OR ITS OFFICERS OR AGENTS SHALL NOT BE RESPONSIBLE FOR THE ACCURACY OR COMPLETENESS OF SCANNED COPIES OF THIS PLAN SHEET.

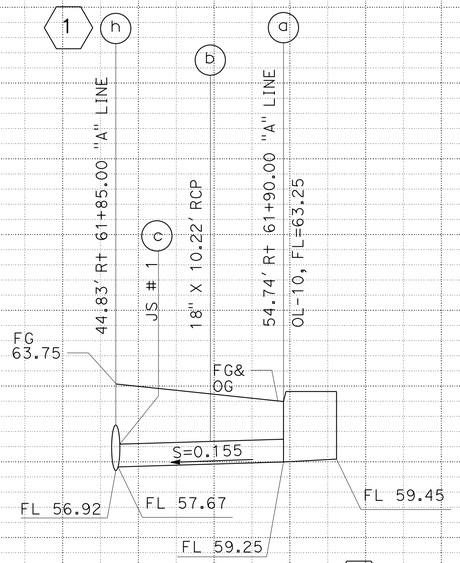

DRAINAGE SYSTEM No. 8

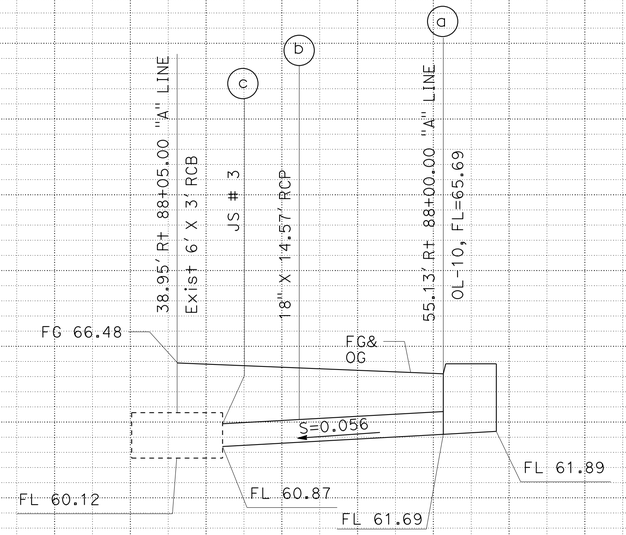

DRAINAGE SYSTEM No. 9

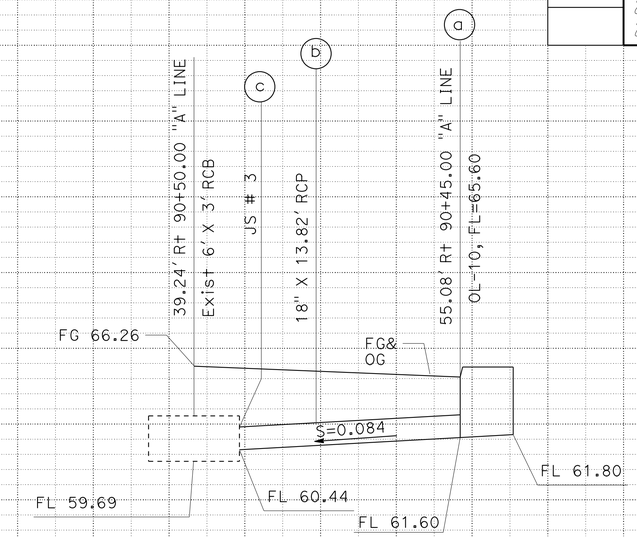

DRAINAGE SYSTEM No. 10

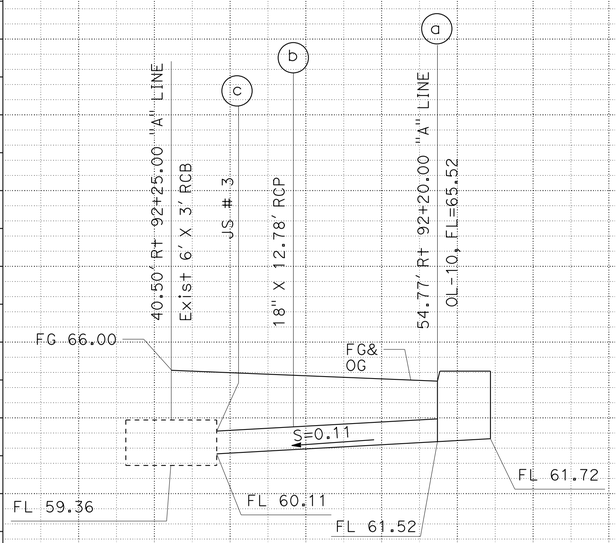

DRAINAGE SYSTEM No. 11

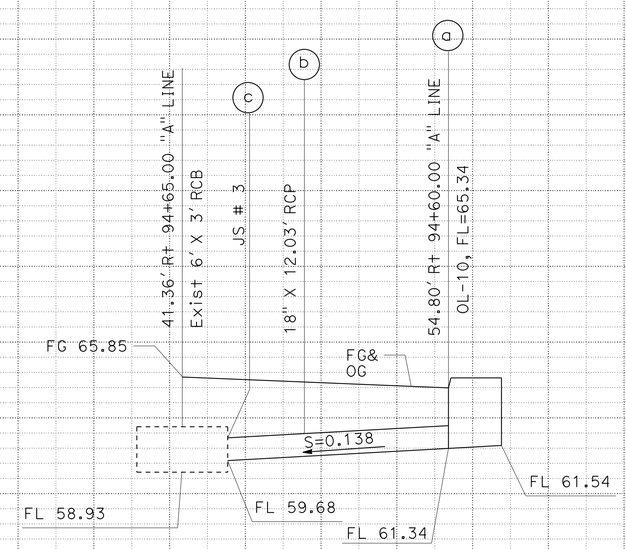

DRAINAGE SYSTEM No. 12

DRAINAGE PROFILE

SCALE: HORIZ 1" = 5'
VERT 1" = 5'

DP-3

STATION		TOTAL
CY	Exc	
	Emb	

STATE OF CALIFORNIA - DEPARTMENT OF TRANSPORTATION
HYDRAULICS
Caltrans

FUNCTIONAL SUPERVISOR: PHI DINH
CALCULATED-DESIGNED BY: SUNIL GUPTA
CHECKED BY: PHI DINH
REVISED BY
DATE REVISED

LAST REVISION 11-04-15
DATE PLOTTED => 04-AUG-2016
TIME PLOTTED => 11:27

Dist	COUNTY	ROUTE	POST MILES TOTAL PROJECT	SHEET No.	TOTAL SHEETS
12	Ora	39	9.8/10.5	21	80

REGISTERED CIVIL ENGINEER 05-09-16 DATE

06-06-16
PLANS APPROVAL DATE

REGISTERED PROFESSIONAL ENGINEER SUNIL GUPTA No. C42195 Exp. 03-31-18 CIVIL STATE OF CALIFORNIA

THE STATE OF CALIFORNIA OR ITS OFFICERS OR AGENTS SHALL NOT BE RESPONSIBLE FOR THE ACCURACY OR COMPLETENESS OF SCANNED COPIES OF THIS PLAN SHEET.

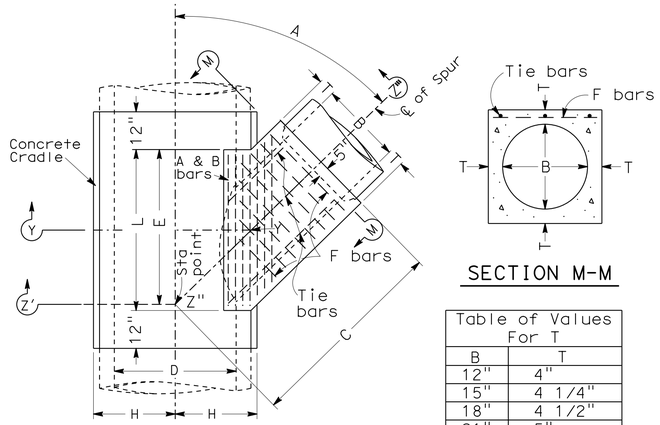

PLAN

SECTION M-M

Table of Values For T	
B	T
12"	4"
15"	4 1/4"
18"	4 1/2"
21"	5"
24"	5 1/4"
27"	5 1/2"
30"	6"
33"	6 1/4"
36"	6 1/2"
39"	7"

MINIMUM DEPTH OF TOP AND BOTTOM SLABS SHALL BE $\frac{D}{12}$ + 2"

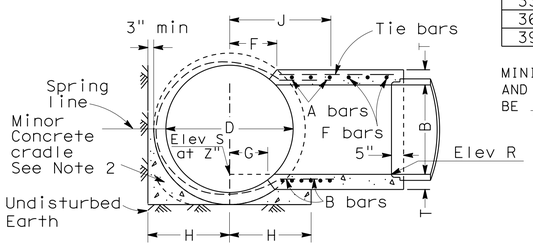

SECTION Z'-Z"-Z"
PROJECTED ON Y-Y-Z"

JUNCTION STRUCTURE No. 1 DATA

⬡	◯	A	B	C	D	E	F	G	L	Elev R	Elev S
DS	DU	DEGREE	INCH	INCH	INCH	INCH	INCH	INCH	INCH	FT	FT
1	i	45.0	36	77.0	54	49.2	25.4	0.0	55.8	56.35	56.34
4	c	63.0	18	44.0	36	19.2	20.2	20.2	20.2	59.37	59.27
6	c	63.0	18	44.0	36	19.2	20.2	20.2	20.2	58.67	58.57
8	c	63.0	18	44.0	36	19.2	20.2	20.2	20.2	57.77	57.67

JUNCTION STRUCTURE No. 3 DATA

⬡	◯	A	B	L	L1	Elev R	Elev S
DS	DU	DEGREE	INCH	INCH	INCH	FT	FT
9	c	65.5	18	109.0	92.0	60.95	60.87
10	c	65.5	18	109.0	92.0	60.56	60.44
11	c	65.5	18	109.0	92.0	60.27	60.11
12	c	65.5	18	109.0	92.0	59.88	59.68

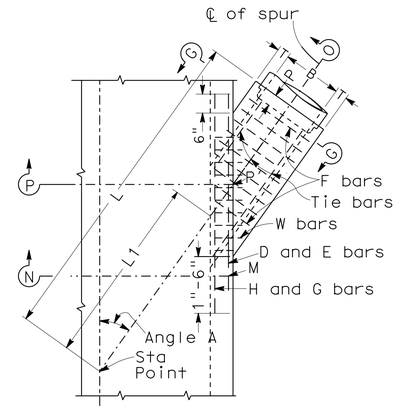

PLAN

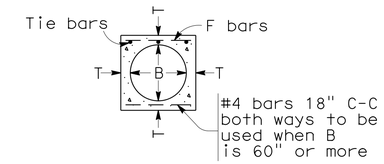

SECTION G-G

TABLE OF VALUES FOR T			
B	T	B	T
12"	4"	63"	10"
15"	4 1/4"	66"	10 1/4"
18"	4 1/2"	69"	10 3/4"
21"	5"	72"	11"
24"	5 1/4"	78"	11 3/4"
27"	5 1/2"	84"	12 1/2"
30"	6"	90"	13 1/4"
33"	6 1/4"	96"	14"
36"	6 1/2"	102"	15 1/2"
39"	7"	108"	16"
42"	7 1/2"	114"	16 1/2"
45"	7 3/4"	120"	17"
48"	8"	126"	17"
51"	8 1/2"	132"	17 1/2"
54"	9"	138"	17 1/2"
57"	9 1/4"	144"	18"
60"	9 1/2"		

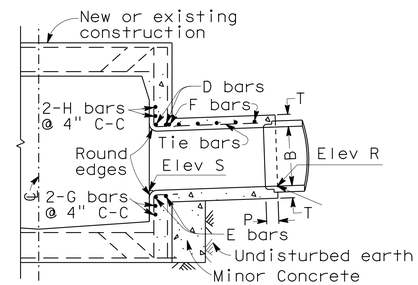

SECTION N-M-P'-O
PROJECTED ON P-P'-O

NOTES

1. VALUES FOR 'A', 'B', 'C', 'D', 'E', 'F', 'G', 'L', 'ELEV R' AND 'ELEV S' SHOWN ON DRAINAGE PLANS.
2. PIPE SHALL BE CRADLED IN CONCRETE EXTENDING LONGITUDINALLY TO 1' BEYOND LIMITS OF 'L'. H=1/2 OUTSIDE DIAMETER OF PIPE PLUS 3" AS A MINIMUM. CRADLE MAY BE OMITTED ON SIDE OPPOSITE LATERAL INLET WHEN CONSTRUCTED IN CONNECTION WITH EXISTING PIPE STORM DRAIN.
3. A AND B BARS SHALL BE CARRIED TO A POINT NOT LESS THAN J DISTANCE FROM CENTER LINE. J= D + 6.
4. RECTANGULAR OPENING IN MAIN LINE PIPE SHALL BE CUT WITHIN LIMITS OF 'F', 'G', AND 'L' NORMAL TO PIPE SURFACE WITHOUT DAMAGING STEEL.
5. TRANSVERSE REINFORCEMENT IN PIPE SHALL BE CUT IN CENTER OF OPENING AND BENT TO UNIFORM DISTANCE FROM TOP AND BOTTOM OF JUNCTION STRUCTURE.
6. OPTIONAL CONSTRUCTION: WHEN JUNCTION STRUCTURE #1 IS SPECIFIED ON DRAINAGE PLAN, THE CONTRACTOR SHALL HAVE THE OPTION OF CONSTRUCTING JUNCTION STRUCTURE #2, IN WHICH CASE CONSTRUCTION DATA WILL BE FURNISHED BY THE ENGINEER.
7. REINFORCING STEEL SHALL BE 1 " CLEAR FROM FACE OF CONCRETE UNLESS OTHERWISE SHOWN.
8. STEEL SCHEDULE: A AND B BARS - #5 @ 3" C-C
   F BARS - #4 @ 6" C-C
   TIE BARS - #3 @ 18" C-C
9. MONOLITHIC ARCH: WHEN JUNCTION STRUCTURE #1 IS SPECIFIED WITH REINFORCED MONOLITHIC ARCH STORM DRAIN, VALUE 'D' SHALL REFER TO THE CLEAR SPAN OF ARCH. REINFORCING STEEL SHALL BE CUT AND BENT INTO JUNCTION STRUCTURE THE SAME AS FOR PIPE. CONCRETE CRADLE UNDER REINFORCED MONOLITHIC ARCH IS NOT REQUIRED.
10. FLOOR OF STRUCTURE SHALL BE STEEL-TROWELED TO SPRING LINE.
11. ELEVATION 'S' APPLIES AT CENTER OF MAIN LINE ON PROLONGATION OF INVERT SPUR.

JUNCTION STRUCTURE No. 1 (JS#1)

NOTES

1. VALUES FOR 'A', 'B', 'L', 'L1', 'ELEV R' AND 'ELEV S' ARE SHOWN ON DRAINAGE PLAN.
2. STATIONS SPECIFIED IN DRAINAGE PLAN APPLY AT INTERSECTION OF CENTERLINES OF MAIN LINE AND LATERAL.
3. EMBEDMENT 'P' SHALL BE 5" FOR PIPE DIAMETERS 12" TO 96" AND 8" FOR PIPE DIAMETERS 102" TO 144".
4. REINFORCING STEEL SHALL BE 1 " CLEAR FROM FACE OF CONCRETE UNLESS OTHERWISE SHOWN. W BARS ARE OF SIZE AND SPACING SPECIFIED FOR WALL STEEL ON DRAINAGE PLAN, AND SHALL BE CUT IN CENTER OF OPENING AND BENT INTO TOP AND BOTTOM OF JUNCTION STRUCTURE. OMIT H BARS WHEN SOFFIT OF SPUR IS 1' OR LESS BELOW SOFFIT OF MAIN LINE, AND OMIT G BARS WHEN INVERT OF SPUR IS 1' OR LESS ABOVE FLOOR OF MAIN LINE.
5. STEEL SCHEDULE:

Dia B	D,E,H,G Bars	F Bars
12" to 39"	#5	#4 @ 6" C-C
42" to 84"	#6	#5 @ 6" C-C
90" to 144"	#7	#6 @ 6" C-C
Tie bars - #3 @ 18" C-C		

6. JUNCTION STRUCTURE SHALL BE POURED MONOLITHIC WITH MAIN LINE STORM DRAIN OR MANHOLE.
7. FLOOR OF STRUCTURE SHALL BE STEEL-TROWELED.

JUNCTION STRUCTURE No. 3 (JS#3)

DRAINAGE DETAILS

NO SCALE

DD-1

STATE OF CALIFORNIA - DEPARTMENT OF TRANSPORTATION
Caltrans
HYDRAULICS

FUNCTIONAL SUPERVISOR: PHI DINH
CALCULATED-DESIGNED BY: SUNIL GUPTA
CHECKED BY: PHI DINH
REVISED BY
DATE REVISED

LAST REVISION 08-14-15
DATE PLOTTED => 04-AUG-2016
TIME PLOTTED => 11:27

Dist	COUNTY	ROUTE	POST MILES TOTAL PROJECT	SHEET No.	TOTAL SHEETS
12	Ora	39	9.8/10.5	22	80

REGISTERED CIVIL ENGINEER 05-09-16 DATE

06-06-16
PLANS APPROVAL DATE

REGISTERED PROFESSIONAL ENGINEER SUNIL GUPTA No. C42195 Exp. 03-31-18 CIVIL STATE OF CALIFORNIA

THE STATE OF CALIFORNIA OR ITS OFFICERS OR AGENTS SHALL NOT BE RESPONSIBLE FOR THE ACCURACY OR COMPLETENESS OF SCANNED COPIES OF THIS PLAN SHEET.

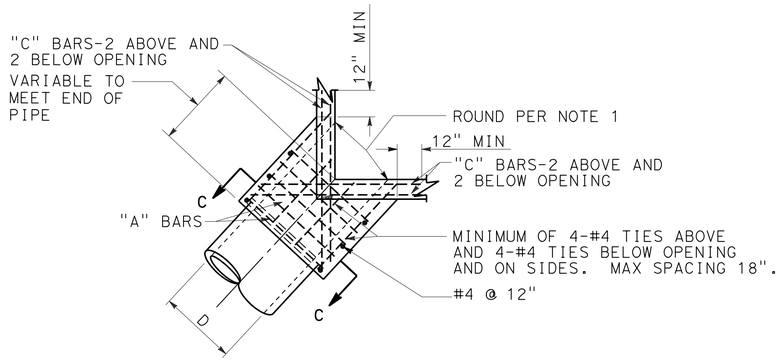

PLAN
CORNER CONNECTION

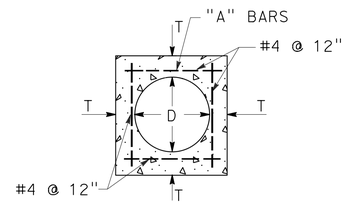

SECTION C-C

D	T	"A"	"B"-"C"
12"	4-½"	#4 @ 6"	#5
15"	4-½"		
18"	5"		
21"	5-½"		
24"	6"		
27"	6-½"		
30"	7"		
33"	7"		
36"	7-½"		
39"	8"		
42"	8"		
45"	8"	#5 @ 6"	#6
48"	8"		
51"	8"		
54"	8"		
57"	10"		
60"	10"		
63"	10"		
66"	11"		
69"	11"		
72"	11"		

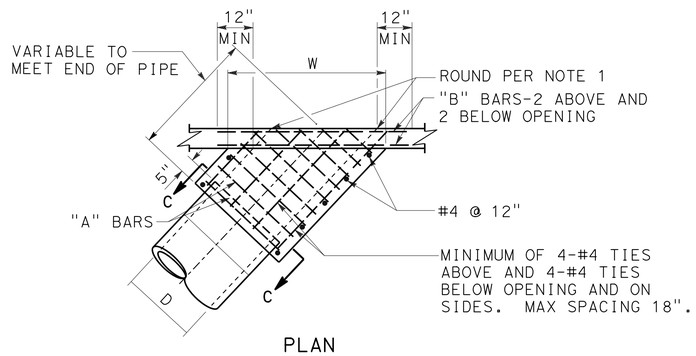

PLAN
SIDE CONNECTION

NOTES:

1. ROUND EDGE OF OUTLET TO 3" RADIUS.
2. REINFORCEMENT SHALL BE 1½" CLEAR FROM THE FACE OF CONCRETE.
3. IN CONNECTING TO AN EXISTING STRUCTURE BREAK OUT PORTIONS OF THE EXISTING STRUCTURE SIX INCHES OUTSIDE ITS INTERSECTION WITH THE NEW CONNECTION. BEND ENDS OF #4 BARS OVER CONNECTION OPENING AS REQUIRED.

MONOLITHIC CONNECTION
FOR PIPES 12" TO 72" INCLUSIVE

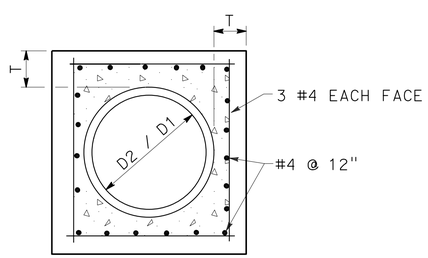

SECTION B-B

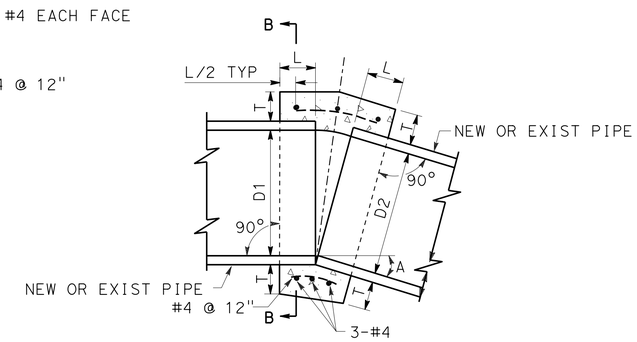

CONCRETE COLLAR

D	L	T
12"	1.0'	4"
18"	1.0'	5"
24"	1.0'	6"
36"	1.5'	8"
48"	1.5'	10"
54"	1.5'	10"
60"	1.75'	11"
66"	1.75'	11"
72"	2.0'	12"

NOTES:

1. WHERE PIPES OF DIFFERENT DIAMETERS ARE JOINED WITH A CONCRETE COLLAR, 'L' AND 'T' SHALL BE THOSE OF THE LARGER PIPE. D=D1 OR D2, WHICHEVER IS GREATER.
2. FOR PIPE SIZE NOT LISTED USE NEXT SIZE LARGER.
3. OMIT REINFORCING ON PIPES 24" AND LESS IN DIAMETER AND ON ALL PIPES WHERE ANGLE A IS LESS THAN 10°.
4. JOIN PIPES AT INVERTS.
5. REINFORCEMENT SHALL BE PLACED 1½" CLEAR FROM OUTSIDE DIAMETER OF PIPE.

DRAINAGE DETAILS
NO SCALE

DD-2

STATE OF CALIFORNIA - DEPARTMENT OF TRANSPORTATION
Caltrans
HYDRAULICS

FUNCTIONAL SUPERVISOR: PHI DINH
CALCULATED-DESIGNED BY: SUNIL GUPTA
CHECKED BY: PHI DINH
REVISED BY
DATE REVISED

LAST REVISION 11-04-15
DATE PLOTTED => 04-AUG-2016
TIME PLOTTED => 11:27

Dist	COUNTY	ROUTE	POST MILES TOTAL PROJECT	SHEET No.	TOTAL SHEETS
12	Ora	39	9.8/10.5	23	80

REGISTERED CIVIL ENGINEER 05-09-16 DATE

06-06-16
PLANS APPROVAL DATE

REGISTERED PROFESSIONAL ENGINEER SUNIL GUPTA No. C42195 Exp. 03-31-18 CIVIL STATE OF CALIFORNIA

THE STATE OF CALIFORNIA OR ITS OFFICERS OR AGENTS SHALL NOT BE RESPONSIBLE FOR THE ACCURACY OR COMPLETENESS OF SCANNED COPIES OF THIS PLAN SHEET.

NOTES:

1. (N) NOT A SEPERATE PAY ITEM, FOR INFORMATION ONLY

ABBREVIATIONS:

S = STANDARD JOINT TYPE
Bet = BETWEEN

DRAINAGE SYSTEM NUMBER ⬡	DRAINAGE UNIT ◯	MINOR CONCRETE (MINOR STRUCTURE)	MISCELLANEOUS IRON AND STEEL	DRAINAGE INLET MARKER	MANHOLE FRAME AND COVER (N)	36" PRECAST CONCRETE PIPE MANHOLE	36" REINFORCED CONCRETE PIPE	18" REINFORCED CONCRETE PIPE	PIPE JOINT CLASSIFICATION (N)	REMOVE PIPE	ABANDON CULVERT	SAND BACKFILL	"H" OR "V"	MAXIMUM COVER	DESCRIPTION	STATION	DRAINAGE PLAN SHEET No.	DRAINAGE SYSTEM NUMBER ⬡	DRAINAGE UNIT ◯
		CY	LB	EA	EA	LF	LF	LF		LF	LF	CY	FT	FT					
1	a	6.00	435		1	0.00							5.50		JUNCTION STRUCTURE (TYPE MH)	44.00′ Rt 76+75.00 "A" LINE	D-2	1	a
	b						400.00		S					2.50	36" RCP	Bet 44.00′ Rt 76+75.00 AND 44.00′ Rt 72+75.00 "A" LINE			b
	c	6.00	435		1	0.00							5.50		JUNCTION STRUCTURE (TYPE MH)	44.00′ Rt 72+75.00 "A" LINE			c
	d						478.00		S					3.00	36" RCP	Bet 44.00′ Rt 72+75.00 AND 44.36′ Rt 67+97.00 "A" LINE	D-2 D-1		d
	e	6.00	435		1	0.50							6.00		JUNCTION STRUCTURE (TYPE MH)	44.36′ Rt 67+97.00 "A" LINE	D-1		e
	f						442.00		S					3.62	36" RCP	Bet 44.36′ Rt 67+97.00 AND 44.70′ Rt 63+55.00 "A" LINE			f
	g	6.00	435		1	1.12							6.62		JUNCTION STRUCTURE (TYPE MH)	44.70′ Rt 63+55.00 "A" LINE			g
	h						386.40		S					3.85	36" RCP	Bet 44.70′ Rt 63+55.00 AND 40.43′ Rt 59+70.00 "A" LINE			h
	i	1.00												3.85	JUNCTION STRUCTURE No. 1	40.43′ Rt 59+70.00 "A" LINE			i
2	a	2.67	170	1									4.00		OL-10 INLET	55.04′ Rt 76+80.00 "A" LINE	D-2	2	a
	b							10.97	S					3.40	18" RCP	Bet 55.04′ Rt 76+80.00 AND 44.00′ Rt 76+75.00 "A" LINE			b
3	a							11.27	S					3.88	18" RCP	Bet 55.00′ Rt 72+80.00 AND 44.00′ Rt 72+75.00 "A" LINE	D-2	3	a
	b									20.00				4.00	REMOVE PIPE	Bet 55.00′ Rt 72+80.00 AND 42.00′ Rt 72+75.00 "A" LINE			b
	c										130.0	23.62		4.00	ABANDON CULVERT	Bet 42.00′ Rt 72+75.00 AND 63.22′ Lt 71+90.00 "A" LINE	D-2 D-1		c
4	a	2.78	170	1									4.40		OL-10 INLET	54.98′ Rt 70+60.00 "A" LINE	D-1	4	a
	b							11.02	S					3.88	18" RCP	Bet 54.98′ Rt 70+60.00 AND 44.16′ Rt 70+55.00 "A" LINE			b
	c	0.30												3.88	JUNCTION STRUCTURE No. 1	44.16′ Rt 70+55.00 "A" LINE			c
5	a	2.67	170	1									4.00		OL-10 INLET	54.93′ Rt 68+02.00 "A" LINE	D-1	5	a
	b							10.57	S					3.75	18" RCP	Bet 54.93′ Rt 68+02.00 AND 44.36′ Rt 67+97.00 "A" LINE			b
6	a	2.67	170	1									4.00		OL-10 INLET	54.89′ Rt 65+60.00 "A" LINE	D-1	6	a
	b							10.60	S					4.28	18" RCP	Bet 54.89′ Rt 65+60.00 AND 44.55′ Rt 65+55.00 "A" LINE			b
	c	0.30												4.28	JUNCTION STRUCTURE No. 1	44.55′ Rt 65+55.00 "A" LINE			c
SHEET TOTAL		36.39	2420	4	4	1.62	1706.40	54.43		20.00	130.0	23.62							

DRAINAGE QUANTITIES

DQ-1

STATE OF CALIFORNIA - DEPARTMENT OF TRANSPORTATION
Caltrans
HYDRAULICS

FUNCTIONAL SUPERVISOR: PHI DINH
CALCULATED-DESIGNED BY: SUNIL GUPTA
CHECKED BY: PHI DINH
REVISED BY
DATE REVISED

LAST REVISION 11-04-15
DATE PLOTTED => 04-AUG-2016
TIME PLOTTED => 11:27

Dist	COUNTY	ROUTE	POST MILES TOTAL PROJECT	SHEET No.	TOTAL SHEETS
12	Ora	39	9.8/10.5	24	80

REGISTERED CIVIL ENGINEER 05-09-16 DATE

06-06-16
PLANS APPROVAL DATE

REGISTERED PROFESSIONAL ENGINEER SUNIL GUPTA No. C42195 Exp. 03-31-18 CIVIL STATE OF CALIFORNIA

THE STATE OF CALIFORNIA OR ITS OFFICERS OR AGENTS SHALL NOT BE RESPONSIBLE FOR THE ACCURACY OR COMPLETENESS OF SCANNED COPIES OF THIS PLAN SHEET.

NOTES:

1. (N) NOT A SEPERATE PAY ITEM, FOR INFORMATION ONLY

ABBREVIATIONS:

S = STANDARD JOINT TYPE
Bet = BETWEEN

⬡ DRAINAGE SYSTEM NUMBER	◯ DRAINAGE UNIT	MINOR CONCRETE (MINOR STRUCTURE)	MISCELLANEOUS IRON AND STEEL	DRAINAGE INLET MARKER	MANHOLE FRAME AND COVER (N)	36" PRECAST CONCRETE PIPE MANHOLE	36" REINFORCED CONCRETE PIPE	18" REINFORCED CONCRETE PIPE	PIPE JOINT CLASSIFICATION (N)	REMOVE PIPE	ABANDON CULVERT	SAND BACKFILL	"H" OR "V"	MAXIMUM COVER	DESCRIPTION	STATION	DRAINAGE PLAN SHEET No.	⬡ DRAINAGE SYSTEM NUMBER	◯ DRAINAGE UNIT
		CY	LB	EA	EA	LF	LF	LF		LF	LF	CY	FT	FT					
7	a	2.67	170	1									4.00		OL-10 INLET	54.74′ Rt 63+60.00 "A" LINE	D-1	7	a
	b							10.10	S					4.37	18" RCP	Bet 54.74′ Rt 63+60.00 AND 44.70′ Rt 63+55.00 "A" LINE			b
8	a	2.67	170	1									4.00		OL-10 INLET	54.74′ Rt 61+90.00 "A" LINE	D-1	8	a
	b							10.22	S					4.83	18" RCP	Bet 54.74′ Rt 61+90.00 AND 44.83′ Rt 61+85.00 "A" LINE			b
	c	0.30												4.83	JUNCTION STRUCTURE No. 1	44.83′ Rt 61+85.00 "A" LINE			c
9	a	2.67	170	1									4.00		OL-10 INLET	55.13′ Rt 88+00.00 "A" LINE	D-3	9	a
	b							14.57	S					4.03	18" RCP	Bet 55.13′ Rt 88+00.00 AND 41.95′ Rt 88+05.00 "A" LINE			b
	c	0.30												4.03	JUNCTION STRUCTURE No. 3	41.95′ Rt 88+05.00 "A" LINE			c
10	a	2.67	170	1									4.00		OL-10 INLET	55.08′ Rt 90+45.00 "A" LINE	D-3	10	a
	b							13.82	S					4.32	18" RCP	Bet 55.08′ Rt 90+45.00 AND 42.24′ Rt 90+50.00 "A" LINE			b
	c	0.30													JUNCTION STRUCTURE No. 3	42.24′ Rt 90+50.00 "A" LINE			c
11	a	2.67	170	1									4.00		OL-10 INLET	54.77′ Rt 92+20.00 "A" LINE	D-3	11	a
	b							12.78	S					4.39	18" RCP	Bet 54.77′ Rt 92+20.00 AND 43.50′ Rt 92+25.00 "A" LINE			b
	c	0.30												4.39	JUNCTION STRUCTURE No. 3	43.50′ Rt 92+25.00 "A" LINE			c
12	a	2.67	170	1									4.00		OL-10 INLET	54.80′ Rt 94+60.00 "A" LINE	D-3	12	a
	b							12.03	S					4.67	18" RCP	Bet 54.80′ Rt 94+60.00 AND 44.36′ Rt 94+65.00 "A" LINE			b
	c	0.30												4.67	JUNCTION STRUCTURE No. 3	44.36′ Rt 94+65.00 "A" LINE			c
SHEET TOTAL		17.52	1020	6				73.52											
TOTAL		53.91	3440	10	4	1.62	1706.40	127.95		20.00	130.0	23.62							

DRAINAGE QUANTITIES

DQ-2

STATE OF CALIFORNIA - DEPARTMENT OF TRANSPORTATION
Caltrans
HYDRAULICS

FUNCTIONAL SUPERVISOR: PHI DINH
CALCULATED-DESIGNED BY: SUNIL GUPTA
CHECKED BY: PHI DINH
REVISED BY
DATE REVISED

LAST REVISION 11-04-15
DATE PLOTTED => 04-AUG-2016
TIME PLOTTED => 11:27

Dist	COUNTY	ROUTE	POST MILES TOTAL PROJECT	SHEET No.	TOTAL SHEETS
12	Ora	39	9.8/10.5	25	80

Brandon Tran 05-09-16
REGISTERED CIVIL ENGINEER DATE

06-06-16
PLANS APPROVAL DATE

REGISTERED PROFESSIONAL ENGINEER
BRANDON TRAN
No. C58283
Exp. 6-30-16
CIVIL
STATE OF CALIFORNIA

THE STATE OF CALIFORNIA OR ITS OFFICERS OR AGENTS SHALL NOT BE RESPONSIBLE FOR THE ACCURACY OR COMPLETENESS OF SCANNED COPIES OF THIS PLAN SHEET.

NOTES:

1. FOR ACCURATE RIGHT OF WAY DATA, CONTACT RIGHT OF WAY ENGINEERING AT THE DISTRICT OFFICE.
2. LOCATIONS OF UTILITY FACILITIES ON THESE PLANS ARE APPROXIMATE AND SHALL BE VERIFIED BY THE CONTRACTOR PRIOR TO CONSTRUCTION.
3. UTILITY OWNERSHIP:
   GAS - SOUTHERN CALIFORNIA GAS (SCG)
   WATER - GOLDEN STATE WATER (GSW)
   SEWER - ORANGE COUNTY SANITATION DISTRICT (OCSD)

LEGEND:

◇X POTHOLE NUMBER

POTHOLE LOCATION TABLE

POTHOLE LOCATION No.	UTILITY TYPE-OWNER	NORTHING	EASTING	SURFACE ELEVATION	DEPTH OF COVER (feet)
◇1	4" GAS-SCG	2236113.143	6032179.428	64.44	3.25
◇2	4" WATER-GSW	2236113.143	6032181.302	64.49	3.83

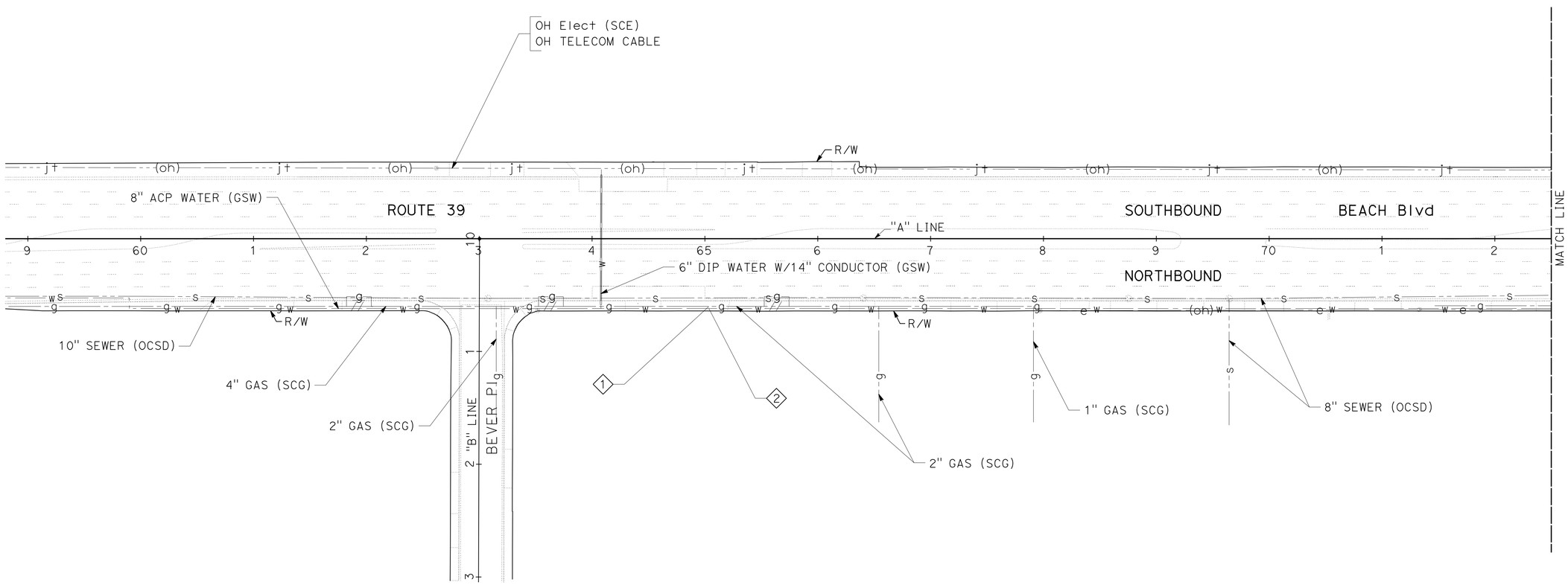

UTILITY PLAN

SCALE 1" = 50'

U-1

APPROVED FOR UTILITY INFORMATION ONLY

STATE OF CALIFORNIA - DEPARTMENT OF TRANSPORTATION
Caltrans® DESIGN DIVISION

FUNCTIONAL SUPERVISOR: CHRISTOPHER H. LE
CALCULATED-DESIGNED BY: BRANDON TRAN
CHECKED BY: CHRISTOPHER H. LE
REVISED BY
DATE REVISED

LAST REVISION 00-00-00
DATE PLOTTED => 04-AUG-2016
TIME PLOTTED => 11:27

Dist	COUNTY	ROUTE	POST MILES TOTAL PROJECT	SHEET No.	TOTAL SHEETS
12	Ora	39	9.8/10.5	26	80

Brandon Tran 05-09-16
REGISTERED CIVIL ENGINEER DATE

06-06-16
PLANS APPROVAL DATE

REGISTERED PROFESSIONAL ENGINEER
BRANDON TRAN
No. C58283
Exp. 6-30-16
CIVIL
STATE OF CALIFORNIA

THE STATE OF CALIFORNIA OR ITS OFFICERS OR AGENTS SHALL NOT BE RESPONSIBLE FOR THE ACCURACY OR COMPLETENESS OF SCANNED COPIES OF THIS PLAN SHEET.

NOTE:

FOR ACCURATE RIGHT OF WAY DATA, CONTACT RIGHT OF WAY ENGINEERING AT THE DISTRICT OFFICE.

POTHOLE LOCATION TABLE

POTHOLE LOCATION No.	UTILITY TYPE-OWNER	NORTHING	EASTING	SURFACE ELEVATION	DEPTH OF COVER (feet)
3	4" GAS-SCG	2237005.709	6032185.029	65.56	4.00
4	4" WATER-GSW	2237005.737	6032187.691	65.61	4.25

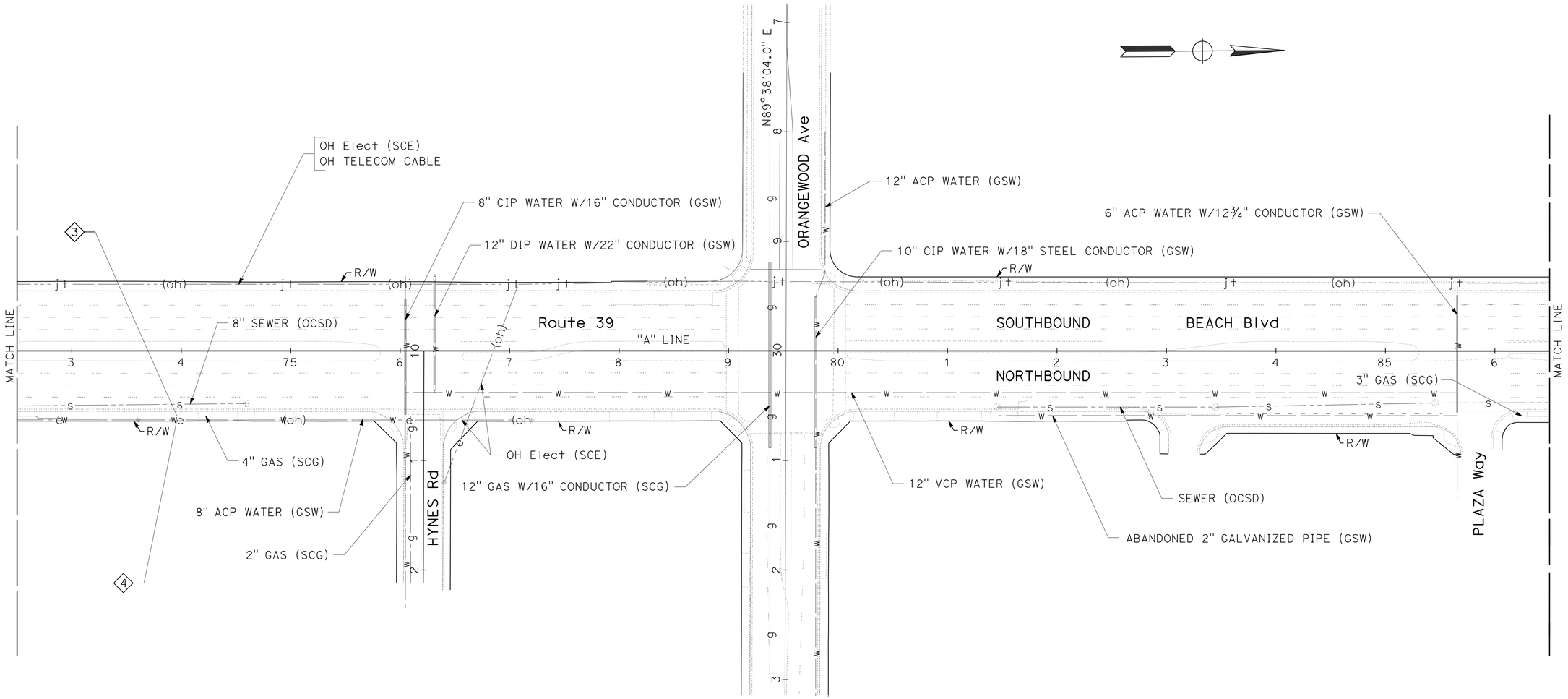

UTILITY PLAN

SCALE 1" = 50'

U-2

APPROVED FOR UTILITY INFORMATION ONLY

STATE OF CALIFORNIA - DEPARTMENT OF TRANSPORTATION
Caltrans
DESIGN DIVISION

FUNCTIONAL SUPERVISOR: CHRISTOPHER H. LE
CALCULATED-DESIGNED BY: BRANDON TRAN
CHECKED BY: CHRISTOPHER H. LE
REVISED BY
DATE REVISED

LAST REVISION 00-00-00
DATE PLOTTED => 04-AUG-2016
TIME PLOTTED => 11:27

Dist	COUNTY	ROUTE	POST MILES TOTAL PROJECT	SHEET No.	TOTAL SHEETS
12	Ora	39	9.8/10.5	27	80

Brandon Tran 05-09-16
REGISTERED CIVIL ENGINEER DATE

06-06-16
PLANS APPROVAL DATE

REGISTERED PROFESSIONAL ENGINEER
BRANDON TRAN
No. C58283
Exp. 6-30-16
CIVIL
STATE OF CALIFORNIA

THE STATE OF CALIFORNIA OR ITS OFFICERS OR AGENTS SHALL NOT BE RESPONSIBLE FOR THE ACCURACY OR COMPLETENESS OF SCANNED COPIES OF THIS PLAN SHEET.

NOTE:

FOR ACCURATE RIGHT OF WAY DATA, CONTACT RIGHT OF WAY ENGINEERING AT THE DISTRICT OFFICE.

POTHOLE LOCATION TABLE

POTHOLE LOCATION No.	UTILITY TYPE-OWNER	NORTHING	EASTING	SURFACE ELEVATION	DEPTH OF COVER (feet)
5	3" GAS-SCG	2238401.884	6032193.881	66.44	3.25
6	3" GAS-SCG	2239064.274	6032191.427	66.05	3.17

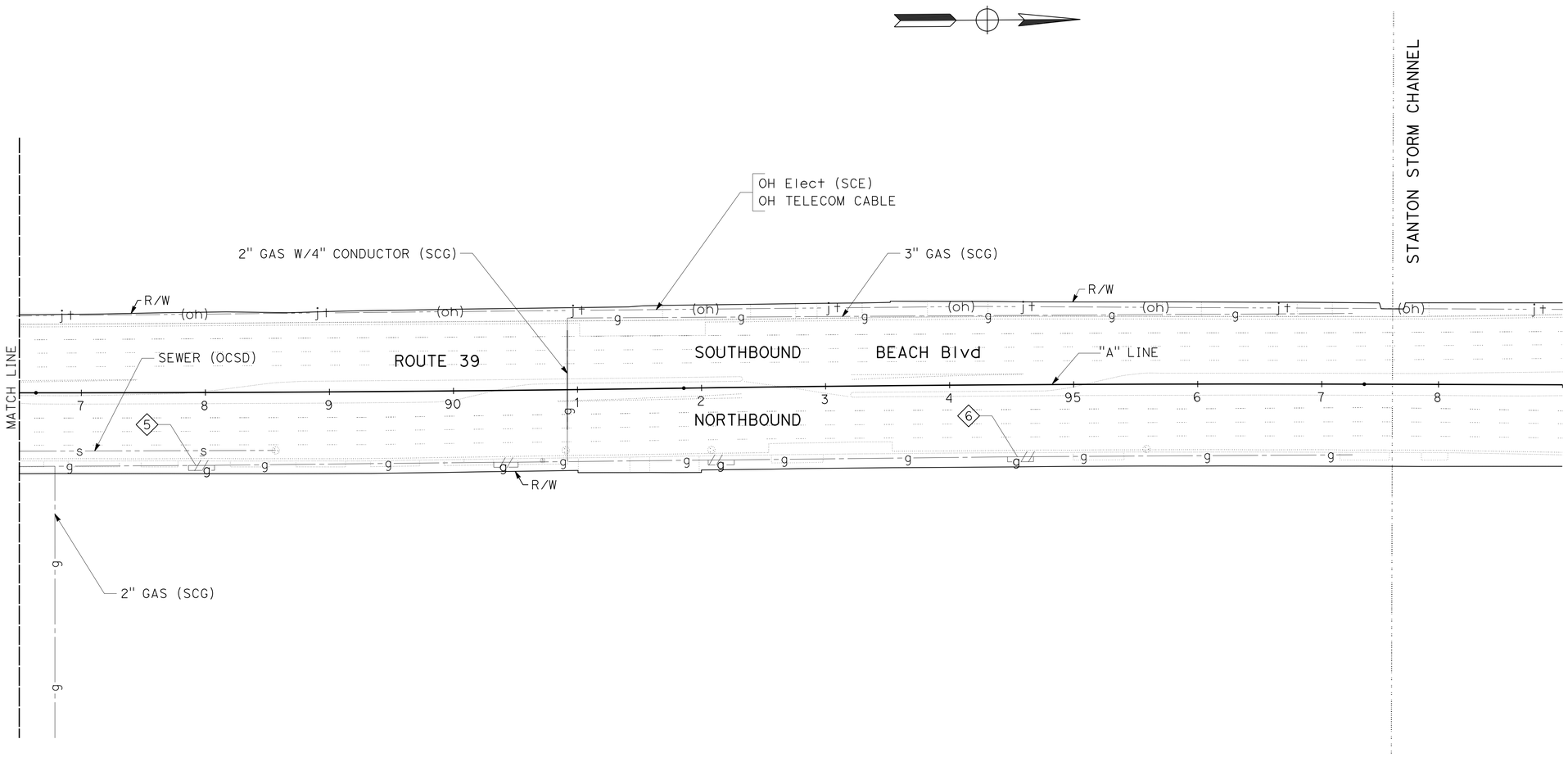

UTILITY PLAN

SCALE 1" = 50'

U-3

APPROVED FOR UTILITY INFORMATION ONLY

STATE OF CALIFORNIA - DEPARTMENT OF TRANSPORTATION
Caltrans
DESIGN DIVISION

FUNCTIONAL SUPERVISOR: CHRISTOPHER H. LE
CALCULATED-DESIGNED BY: BRANDON TRAN
CHECKED BY: CHRISTOPHER H. LE
REVISED BY
DATE REVISED

LAST REVISION 00-00-00
DATE PLOTTED => 04-AUG-2016
TIME PLOTTED => 11:27

Dist	COUNTY	ROUTE	POST MILES TOTAL PROJECT	SHEET No.	TOTAL SHEETS
12	Ora	39	9.8/10.5	28	80

REGISTERED CIVIL ENGINEER 05-09-16 DATE

06-06-16
PLANS APPROVAL DATE

REGISTERED PROFESSIONAL ENGINEER
FARIBA A. KHOSARAVI
No. C54265
Exp. 12-31-17
CIVIL
STATE OF CALIFORNIA

THE STATE OF CALIFORNIA OR ITS OFFICERS OR AGENTS SHALL NOT BE RESPONSIBLE FOR THE ACCURACY OR COMPLETENESS OF SCANNED COPIES OF THIS PLAN SHEET.

NOTES:

1. LOCATIONS OF CONSTRUCTION AREA SIGNS AND PCMS ARE APPROXIMATE. EXACT LOCATIONS TO BE DETERMINED BY THE ENGINEER.
2. EXACT MESSAGE ON PCMS TO BE DETERMINED BY THE ENGINEER.

LEGEND:

- CONSTRUCTION AREA SIGN ONE POST
- (X) CONSTRUCTION AREA SIGN NO.
- PCMS-X PORTABLE CHANGEABLE MESSAGE SIGN NO.
- # TYPE II BARRICADE

STATIONARY MOUNTED CONSTRUCTION AREA SIGNS

SIGN No.	SIGN CODE	SIGN MESSAGE	PANEL SIZE	No. OF POSTS AND SIZE (IN)	No. OF SIGNS
1	W20-1	ROAD WORK AHEAD	36" X 36"	1 - 4" X 6"	9
2	G20-2	END ROAD WORK	36" x 18"	1 - 4" X 6"	9
3	W11-1	(BIKE SYMBOL)	24" X 24"	1 - 4" X 6"	4
	W16-1	SHARE THE ROAD	30" x 24"		
4	C9A	(FLAGGER SYMBOL)	36" X 36"	1 - 4" X 6"	2
5	C46(CA) MOD	STEEL PLATES AHEAD	36" x 36"	1 - 4" X 6"	4

FOR ADDITIONAL CONSTRUCTION AREA SIGNS SEE SHEET CS-2

PCMS No.	MESSAGE	
	1ST FRAME	2ND FRAME
PCMS-1	ROAD WORK AHEAD	USE ALTERNATE ROUTE
PCMS-2	ROAD WORK AHEAD	USE ALTERNATE ROUTE
PCMS-3	ROAD WORK AHEAD	PREPARE TO STOP
PCMS-4	ROAD WORK AHEAD	PREPARE TO STOP

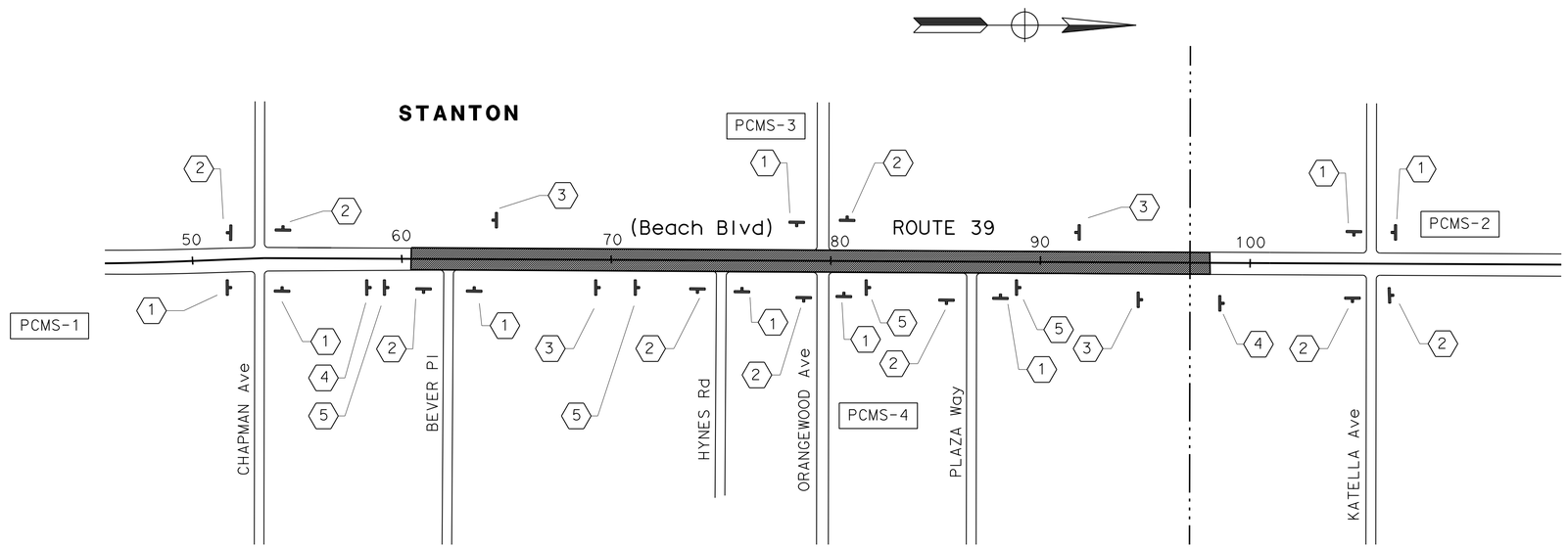

CONSTRUCTION AREA SIGNS

NO SCALE

CS-1

APPROVED FOR CONSTRUCTION AREA SIGN WORK ONLY

STATE OF CALIFORNIA - DEPARTMENT OF TRANSPORTATION
Caltrans
DESIGN BRANCH B
FUNCTIONAL SUPERVISOR: CHRISTOPHER LE
CALCULATED-DESIGNED BY: ALIX WILLIAMS
CHECKED BY: FARIBA A. KHOSRAVI
REVISED BY
DATE REVISED

LAST REVISION 04-22-16
DATE PLOTTED => 04-AUG-2016
TIME PLOTTED => 11:27

Dist	COUNTY	ROUTE	POST MILES TOTAL PROJECT	SHEET No.	TOTAL SHEETS
12	Ora	39	9.8/10.5	29	80

REGISTERED CIVIL ENGINEER DATE 05-09-16

PLANS APPROVAL DATE 06-06-16

REGISTERED PROFESSIONAL ENGINEER FARIBA A. KHOSARAVI No. C54265 Exp. 12-31-17 CIVIL STATE OF CALIFORNIA

THE STATE OF CALIFORNIA OR ITS OFFICERS OR AGENTS SHALL NOT BE RESPONSIBLE FOR THE ACCURACY OR COMPLETENESS OF SCANNED COPIES OF THIS PLAN SHEET.

NOTES:

1. LOCATIONS OF CONSTRUCTION AREA SIGNS ARE APPROXIMATE. EXACT LOCATIONS TO BE DETERMINED BY THE ENGINEER.
2. 48" MINIMUM CLEARANCE MUST BE MAINTAINED WHEN SIGNS ARE PLACED ON THE SIDEWALK.

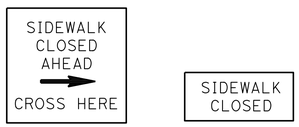

R9-11 (Rt) R9-9

CONSTRUCTION AREA SIGNS

SIGN No.	SIGN CODE	SIGN MESSAGE	PANEL SIZE	No. OF SIGNS	REMARKS
6	R9-11 (Rt)	SIDEWALK CLOSED AHEAD CROSS HERE (BLACK ON WHITE)	36" X 24"	4	ATTACH TO TYPE II BARRICADE
7	R9-9	SIDEWALK CLOSED (BLACK ON WHITE)	36" X 18"	4	ATTACH TO TYPE II BARRICADE

FOR ADDITIONAL CONSTRUCTION AREA SIGNS SEE SHEET CS-1

TYPE II BARRICADE

SHEET NO.	TYPE II BARRICADE
	EA
CS-2	8
TOTAL	8

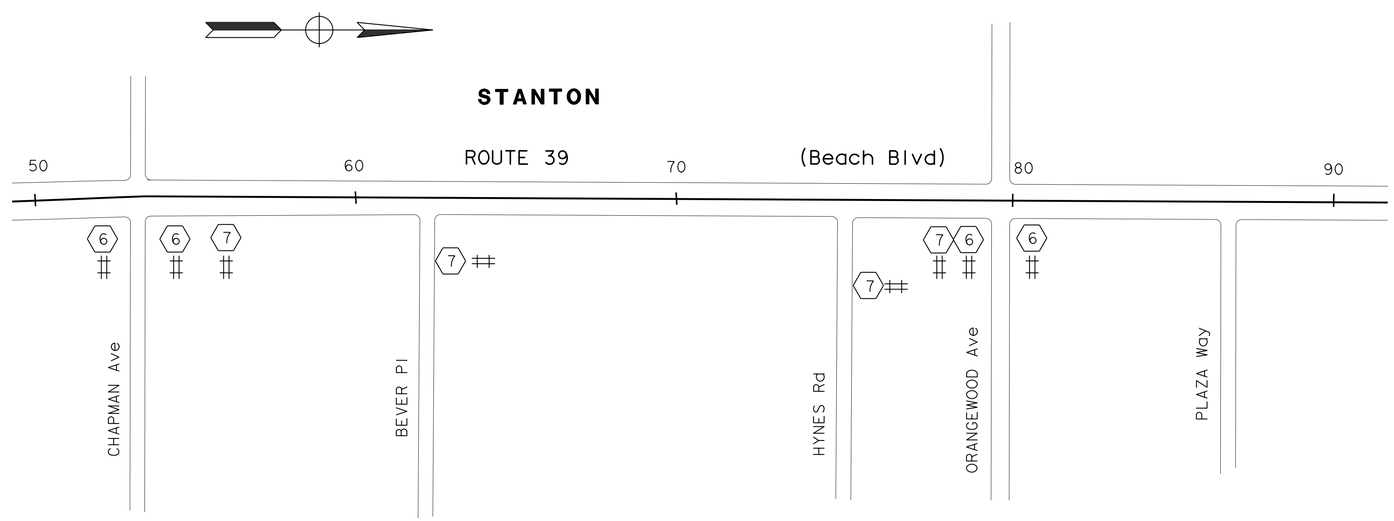

CONSTRUCTION AREA SIGNS

(PEDESTRIANS)

NO SCALE

CS-2

APPROVED FOR CONSTRUCTION AREA SIGN WORK ONLY

STATE OF CALIFORNIA - DEPARTMENT OF TRANSPORTATION

Caltrans® DESIGN BRANCH B

FUNCTIONAL SUPERVISOR CHRISTOPHER LE

CALCULATED-DESIGNED BY ALIX WILLIAMS

CHECKED BY FARIBA A. KHOSRAVI

REVISED BY

DATE REVISED

LAST REVISION 4-20-16

DATE PLOTTED => 04-AUG-2016

TIME PLOTTED => 11:27

Dist	COUNTY	ROUTE	POST MILES TOTAL PROJECT	SHEET No.	TOTAL SHEETS
12	Ora	39	9.8/10.5	30	80

Bang Q. Hua 05-09-16
REGISTERED CIVIL ENGINEER DATE

06-06-16
PLANS APPROVAL DATE

REGISTERED PROFESSIONAL ENGINEER
BANG Q. HUA
No. C 71273
Exp. 12/31/17
CIVIL
STATE OF CALIFORNIA

THE STATE OF CALIFORNIA OR ITS OFFICERS OR AGENTS SHALL NOT BE RESPONSIBLE FOR THE ACCURACY OR COMPLETENESS OF SCANNED COPIES OF THIS PLAN SHEET.

NOTE:

1. FOR ACCURATE RIGHT OF WAY DATA, CONTACT RIGHT OF WAY ENGINEERING AT THE DISTRICT OFFICE.

LEGEND:

- X — PAVEMENT DELINEATION DETAIL No.
- CW — CROSSWALK - 12" WHITE MARKING
- CHANGE IN PAVEMENT DELINEATION DETAIL
- END OF PAVEMENT DELINEATION DETAIL
- DIRECTION OF TRAFFIC
- ROADSIDE SIGN - ONE POST
- PEDESTRIAN BARRICADE MOUNTED SIGN
- X — ROADSIDE SIGN No.

ABBREVIATIONS:

IS1	ROADSIDE SIGN - ONE POST
RS	REMOVE ROADSIDE SIGN
SP	PEDESTRIAN BARRICADE MOUNTED SIGN (SEE ELECTRICAL PLAN)

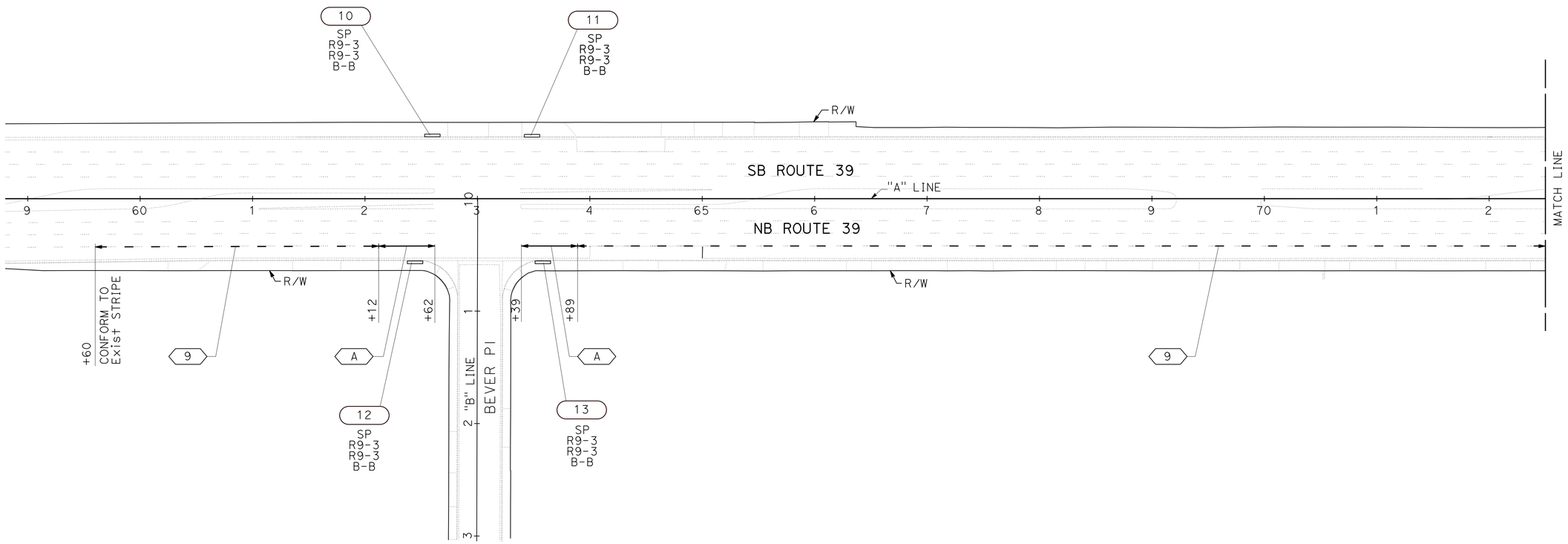

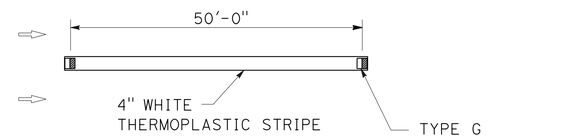

DETAIL A
NO SCALE

PAVEMENT DELINEATION AND SIGN PLAN

SCALE: 1" = 50'

APPROVED FOR PAVEMENT DELINEATION AND SIGN WORK ONLY

PD-1

STATE OF CALIFORNIA - DEPARTMENT OF TRANSPORTATION
Caltrans® **TRAFFIC DESIGN**

FUNCTIONAL SUPERVISOR: KAMRAN MAZHAR
CALCULATED-DESIGNED BY: BANG HUA
CHECKED BY: SIDNEY DADRAS
REVISED BY
DATE REVISED

LAST REVISION 03-10-16
DATE PLOTTED => 04-AUG-2016
TIME PLOTTED => 11:27

Dist	COUNTY	ROUTE	POST MILES TOTAL PROJECT	SHEET No.	TOTAL SHEETS
12	Ora	39	9.8/10.5	31	80

Bang Q. Hua 05-09-16
REGISTERED CIVIL ENGINEER DATE

06-06-16
PLANS APPROVAL DATE

REGISTERED PROFESSIONAL ENGINEER
BANG Q. HUA
No. C 71273
Exp. 12/31/17
CIVIL
STATE OF CALIFORNIA

THE STATE OF CALIFORNIA OR ITS OFFICERS OR AGENTS SHALL NOT BE RESPONSIBLE FOR THE ACCURACY OR COMPLETENESS OF SCANNED COPIES OF THIS PLAN SHEET.

NOTES:

1. FOR ACCURATE RIGHT OF WAY DATA, CONTACT RIGHT OF WAY ENGINEERING AT THE DISTRICT OFFICE.
2. PROVIDE MINIMUM 4 FEET OFFSET FROM CURB RAMP LANDING INSIDE THE CROSSWALK.

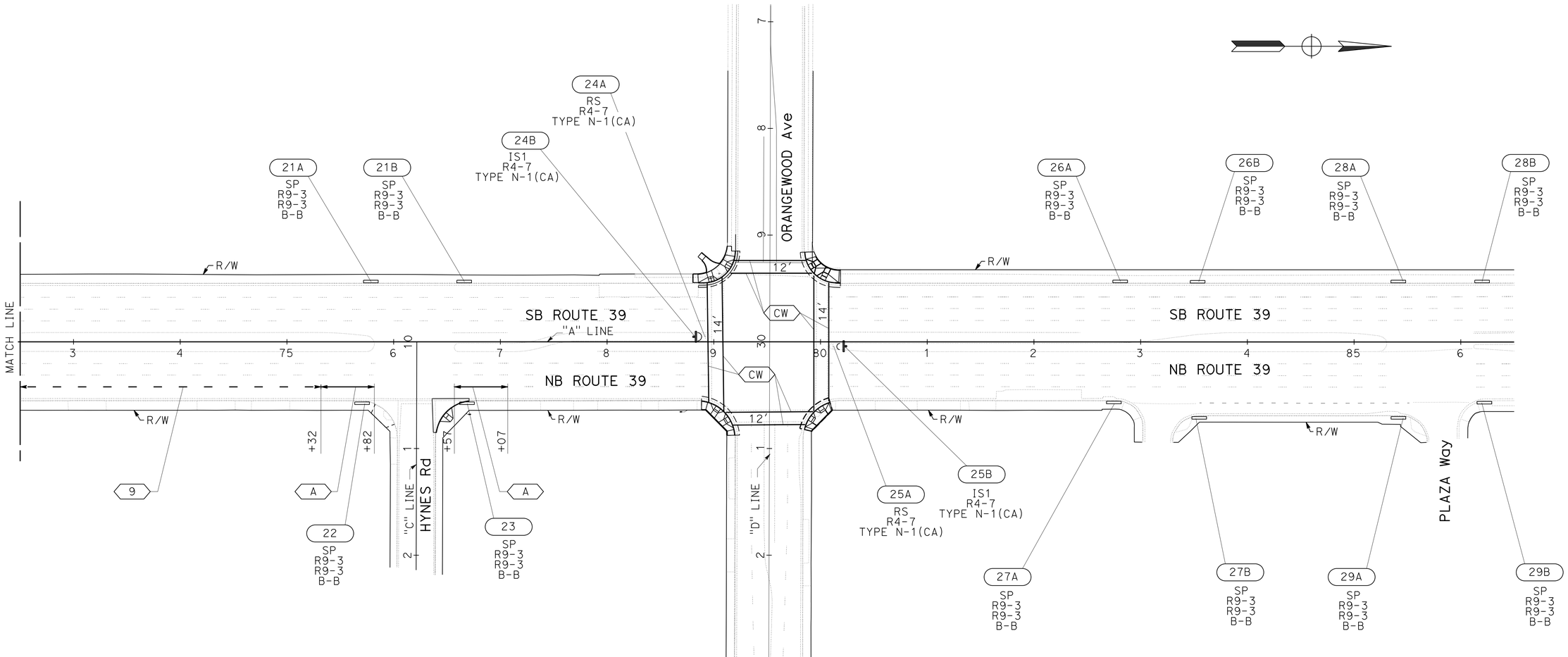

PAVEMENT DELINEATION AND SIGN PLAN

SCALE: 1" = 50'

APPROVED FOR PAVEMENT DELINEATION AND SIGN WORK ONLY

PD-2

STATE OF CALIFORNIA - DEPARTMENT OF TRANSPORTATION
Caltrans® TRAFFIC DESIGN

FUNCTIONAL SUPERVISOR: KAMRAN MAZHAR
CALCULATED-DESIGNED BY: BANG HUA
CHECKED BY: SIDNEY DADRAS
REVISED BY
DATE REVISED

LAST REVISION 03-10-16 | DATE PLOTTED => 04-AUG-2016 | TIME PLOTTED => 11:27

Dist	COUNTY	ROUTE	POST MILES TOTAL PROJECT	SHEET No.	TOTAL SHEETS
12	Ora	39	9.8/10.5	32	80

Bang Q. Hua 05-09-16
REGISTERED CIVIL ENGINEER DATE

06-06-16
PLANS APPROVAL DATE

REGISTERED PROFESSIONAL ENGINEER
BANG Q. HUA
No. C 71273
Exp. 12/31/17
CIVIL
STATE OF CALIFORNIA

THE STATE OF CALIFORNIA OR ITS OFFICERS OR AGENTS SHALL NOT BE RESPONSIBLE FOR THE ACCURACY OR COMPLETENESS OF SCANNED COPIES OF THIS PLAN SHEET.

PAVEMENT DELINEATION QUANTITIES

SHEET	LOCATION	THERMOPLASTIC TRAFFIC STRIPE		THERMOPLASTIC PAVEMENT MARKING	PAVEMENT MARKER	REMOVE		
		DETAIL 9 4" WHITE (BROKEN 17-7)	DETAIL A 4" SOLID WHITE	CROSSWALK	RETRO-REFLECTIVE TYPE G	THERMOPLASTIC TRAFFIC STRIPE	THERMOPLASTIC PAVEMENT MARKING	PAVEMENT MARKER
		LF	LF	SQFT	EA	LF	SQFT	EA
PD-1	Rte-39	1113	100		27	434		27
PD-2	Rte-39	282	100	723	8	185	723	8
TOTAL		1395	200	723	35	619	723	35

PAVEMENT DELINEATION QUANTITIES

PDQ-1

STATE OF CALIFORNIA - DEPARTMENT OF TRANSPORTATION
Caltrans TRAFFIC DESIGN

FUNCTIONAL SUPERVISOR: KAMRAN MAZHAR
CALCULATED-DESIGNED BY: BANG HUA
CHECKED BY: SIDNEY DADRAS
REVISED BY
DATE REVISED

LAST REVISION 00-00-00
DATE PLOTTED => 04-AUG-2016
TIME PLOTTED => 11:27

Dist	COUNTY	ROUTE	POST MILES TOTAL PROJECT	SHEET No.	TOTAL SHEETS
12	Ora	39	9.8/10.5	33	80

Bang Q. Hua 05-09-16
REGISTERED CIVIL ENGINEER DATE

06-06-16
PLANS APPROVAL DATE

REGISTERED PROFESSIONAL ENGINEER
BANG Q. HUA
No. C 71273
Exp. 12/31/17
CIVIL
STATE OF CALIFORNIA

THE STATE OF CALIFORNIA OR ITS OFFICERS OR AGENTS SHALL NOT BE RESPONSIBLE FOR THE ACCURACY OR COMPLETENESS OF SCANNED COPIES OF THIS PLAN SHEET.

ROADSIDE SIGNS

SHEET	SIGN No.	SIGN CODE	SIGN PANEL DIMENSION (L x H)	POST SIZE & LENGTH (N)	ROADSIDE SIGN - ONE POST	INSTALL SIGN (PEDESTRIAN BARRICADE) (N)	REMOVE ROADSIDE SIGN	TREATED WOOD WASTE	REMARK
				4"x6"					
			inch x inch	ft	EA	EA	EA	LB	
PD-1	10, 11	R9-3	24 x 24			4			
	12, 13	R9-3	24 x 24						
PD-2	21A, 21B	R9-3	24 x 24			4			
	22, 23	R9-3	24 x 24						
	24A	R4-7					1	85	
		TYPE N-1(CA)							
	24B	R4-7	24 x 30	14	1				
		TYPE N-1(CA)	18 x 18						
	25A	R4-7					1	85	
		TYPE N-1(CA)							
	25B	R4-7	24 x 30	14	1				
		TYPE N-1(CA)	18 x 18						
	26A, 26B	R9-3	24 x 24			2			
		R9-3	24 x 24						
	27A, 27B	R9-3	24 x 24			2			
		R9-3	24 x 24						
	28A, 28B	R9-3	24 x 24			2			
		R9-3	24 x 24						
	29A, 29B	R9-3	24 x 24			2			
		R9-3	24 x 24						
TOTAL					2		2	170	

(N): NOT A SEPARATE PAY ITEM, FOR INFORMATION ONLY.

SIGN QUANTITIES

SQ-1

STATE OF CALIFORNIA - DEPARTMENT OF TRANSPORTATION
Caltrans® TRAFFIC DESIGN

FUNCTIONAL SUPERVISOR: KAMRAN MAZHAR
CALCULATED-DESIGNED BY: BANG HUA
CHECKED BY: SIDNEY DADRAS
REVISED BY
DATE REVISED

LAST REVISION 00-00-00
DATE PLOTTED => 04-AUG-2016
TIME PLOTTED => 11:27

Dist	COUNTY	ROUTE	POST MILES TOTAL PROJECT	SHEET No.	TOTAL SHEETS
12	Ora	39	9.8/10.5	34	80

Bang Q. Hua 05-09-16
REGISTERED CIVIL ENGINEER DATE

06-06-16
PLANS APPROVAL DATE

REGISTERED PROFESSIONAL ENGINEER BANG Q. HUA No. C 71273 Exp. 12/31/17 CIVIL STATE OF CALIFORNIA

THE STATE OF CALIFORNIA OR ITS OFFICERS OR AGENTS SHALL NOT BE RESPONSIBLE FOR THE ACCURACY OR COMPLETENESS OF SCANNED COPIES OF THIS PLAN SHEET.

MATERIAL SUMMARY (CONTRACTOR FURNISHED SIGNS)

SIGN No.	SIGN CODE	SIGN PANEL DIMENSION (L x H)	SINGLE FACED	SIGN FACING MATERIAL						ROADSIDE		RETROREFLECTIVE SHEETING (TYPE XI)	DESCRIPTION (REMARKS)
				BACKGROUND		LEGEND		PROTECTIVE FILM		FURNISH SINGLE SHEET ALUMINUM SIGN FOR RETROREFLECTIVE SHEETING (TYPE XI)	FURNISH SINGLE SHEET ALUMINUM SIGN (0.063"-UNFRAMED)		
				SHEETING COLOR	RETROREFLECTIVE ASTM TYPE	SHEETING COLOR	RETROREFLECTIVE ASTM TYPE	STANDARD	PREMIUM	0.063" UNFRAMED			
		inch x inch								SQFT	SQFT	SQFT	
10	R9-3	24 x 24	X	W	VIII	Blk/R	VIII		X		4.0		
	R9-3	24 x 24	X	W	VIII	Blk/R	VIII		X		4.0		
11	R9-3	24 x 24	X	W	VIII	Blk/R	VIII		X		4.0		
	R9-3	24 x 24	X	W	VIII	Blk/R	VIII		X		4.0		
12	R9-3	24 x 24	X	W	VIII	Blk/R	VIII		X		4.0		
	R9-3	24 x 24	X	W	VIII	Blk/R	VIII		X		4.0		
13	R9-3	24 x 24	X	W	VIII	Blk/R	VIII		X		4.0		
	R9-3	24 x 24	X	W	VIII	Blk/R	VIII		X		4.0		
21A	R9-3	24 x 24	X	W	VIII	Blk/R	VIII		X		4.0		
	R9-3	24 x 24	X	W	VIII	Blk/R	VIII		X		4.0		
21B	R9-3	24 x 24	X	W	VIII	Blk/R	VIII		X		4.0		
	R9-3	24 x 24	X	W	VIII	Blk/R	VIII		X		4.0		
22	R9-3	24 x 24	X	W	VIII	Blk/R	VIII		X		4.0		
	R9-3	24 x 24	X	W	VIII	Blk/R	VIII		X		4.0		
23	R9-3	24 x 24	X	W	VIII	Blk/R	VIII		X		4.0		
	R9-3	24 x 24	X	W	VIII	Blk/R	VIII		X		4.0		
24B	R4-7	24 x 30	X	W	VIII	Blk	non		X		5.0		
	TYPE N-1(CA)	18 x 18	X	Y	XI	Blk	non		X	2.3		2.3	
25B	R4-7	24 x 30	X	W	VIII	Blk	non		X		5.0		
	TYPE N-1(CA)	18 x 18	X	Y	XI	Blk	non		X	2.3		2.3	
26A	R9-3	24 x 24	X	W	VIII	Blk/R	VIII		X		4.0		
	R9-3	24 x 24	X	W	VIII	Blk/R	VIII		X		4.0		
26B	R9-3	24 x 24	X	W	VIII	Blk/R	VIII		X		4.0		
	R9-3	24 x 24	X	W	VIII	Blk/R	VIII		X		4.0		
27A	R9-3	24 x 24	X	W	VIII	Blk/R	VIII		X		4.0		
	R9-3	24 x 24	X	W	VIII	Blk/R	VIII		X		4.0		
27B	R9-3	24 x 24	X	W	VIII	Blk/R	VIII		X		4.0		
	R9-3	24 x 24	X	W	VIII	Blk/R	VIII		X		4.0		
28A	R9-3	24 x 24	X	W	VIII	Blk/R	VIII		X		4.0		
	R9-3	24 x 24	X	W	VIII	Blk/R	VIII		X		4.0		
28B	R9-3	24 x 24	X	W	VIII	Blk/R	VIII		X		4.0		
	R9-3	24 x 24	X	W	VIII	Blk/R	VIII		X		4.0		
29A	R9-3	24 x 24	X	W	VIII	Blk/R	VIII		X		4.0		
	R9-3	24 x 24	X	W	VIII	Blk/R	VIII		X		4.0		
29B	R9-3	24 x 24	X	W	VIII	Blk/R	VIII		X		4.0		
	R9-3	24 x 24	X	W	VIII	Blk/R	VIII		X		4.0		
TOTAL										4.6	138.0	4.6	

ABBREVIATIONS:

Blk = BLACK
R = RED
W = WHITE
Y = YELLOW
non = Non-Reflective

SIGN QUANTITIES

SQ-2

REVISED BY | DATE REVISED
BANG HUA | SIDNEY DADRAS
CALCULATED-DESIGNED BY | CHECKED BY
FUNCTIONAL SUPERVISOR
KAMRAN MAZHAR

STATE OF CALIFORNIA - DEPARTMENT OF TRANSPORTATION
Caltrans® TRAFFIC DESIGN

LAST REVISION 00-00-00 | DATE PLOTTED => 04-AUG-2016 TIME PLOTTED => 11:27

Dist	COUNTY	ROUTE	POST MILES TOTAL PROJECT	SHEET No.	TOTAL SHEETS
12	Ora	39	9.8/10.5	35	80

REGISTERED CIVIL ENGINEER 05-09-16 DATE

06-06-16
PLANS APPROVAL DATE

REGISTERED PROFESSIONAL ENGINEER FARIBA A. KHOSRAVI No. C54265 Exp. 12/31/17 CIVIL STATE OF CALIFORNIA

THE STATE OF CALIFORNIA OR ITS OFFICERS OR AGENTS SHALL NOT BE RESPONSIBLE FOR THE ACCURACY OR COMPLETENESS OF SCANNED COPIES OF THIS PLAN SHEET.

PAVEMENT STRUCTURAL SECTION QUANTITIES

SHEET No.	LOCATION	STATION LIMIT	SIDE	PAVEMENT STRUCTURAL SECTION TYPE	HOT MIX ASPHALT (TYPE A)	CLASS 2 AGGREGATE SUBBASE	RUBBERIZED HOT MIX ASPHALT (GAP GRADED)	RUBBERIZED HOT MIX ASPHALT-OPEN GRADED (OGFC)	TACK COAT	JOINTED PLAIN CONCRETE PAVEMENT (RSC)	REMOVE CONCRETE PAVEMENT	COLD PLANE AC PAVEMENT	ROADWAY EXCAVATION	MINOR CONCRETE (TEXTURED PAVING)	REMOVE CONCRETE		MINOR CONCRETE (MISCELLANEOUS CONSTRUCTION)
															CURB	MEDIAN ISLAND	CONCRETE CURB (A1-6)
					TON	CY	TON	TON	TON	CY	CY	SQYD	CY	CY	CY	CY	CY
L-1	NORTHBOUND BEACH Blvd	"A" 59+60 TO "A" 64+00	R†	1	435	98	79	39.5	0.6				340				
L-1	NORTHBOUND BEACH Blvd	"A" 65+00 TO "A" 72+50	R†	1	740	167	135	67.5	1.0				580				
L-2	NORTHBOUND BEACH Blvd	"A" 72+50 TO "A" 77+00	R†	1	445	100	81	40.5	0.6				348				
L-2 C-8	MEDIAN ISLAND	"A" 78+79.78 TO "A" 78+97.98		1	5.7	2.6	1.0	0.5	0.1				9.8		0.7	1.4	
L-2 C-8	MEDIAN ISLAND	"A" 80+06.40 TO "A" 80+21.31		1	4.5	2.0	0.8	0.4	0.1				7.8		0.6	0.9	
L-3	NORTHBOUND BEACH Blvd	"A" 87+91 TO "A" 88+04	R†	1	1.6	0.6	0.3	0.1	0.1								
L-3	NORTHBOUND BEACH Blvd	"A" 90+35 TO "A" 90+48	R†	1	1.6	0.6	0.3	0.1	0.1								
L-3	NORTHBOUND BEACH Blvd	"A" 92+10 TO "A" 92+23	R†	1	1.6	0.6	0.3	0.1	0.1								
L-3	NORTHBOUND BEACH Blvd	"A" 94+50 TO "A" 94+63	R†	1	1.6	0.6	0.3	0.1	0.1								
L-2	NORTHBOUND BEACH Blvd	"A" 64+00 TO "A" 65+00	R†	2	48.6	120			0.2	43.3	43.3		144				
L-1	NORTHBOUND BEACH Blvd	"A" 59+60 TO "A" 64+00	R†	3			3.3	1.7	0.1			24.5					
L-1	NORTHBOUND BEACH Blvd	"A" 65+00 TO "A" 72+50	R†	3			5.3	2.8	0.1			41.7					
L-1	NORTHBOUND BEACH Blvd	"A" 72+50 TO "A" 77+00	R†	3			3.4	1.7	0.1			25					
L-2 C-8	MEDIAN ISLAND	"A" 78+79.78		4		0.3							0.3	0.3		0.3	0.7
L-2 C-8	MEDIAN ISLAND	"A" 80+21.31		4		0.2							0.2	0.2		0.2	0.6
SUBTOTAL					1685.2	492.5	310	155	3.3	43.3	43.3	91.2	1430.1	0.5	1.3	2.8	1.3
TOTAL					1685.2	492.5	310	155	3.3	43.3	43.3	91.2	1430.1	0.5	4.1		1.3
FROM SHEET Q-2					10.6	30.7			0.4				45.9		123		121.2
GRAND TOTAL					1695.8	523.2	310	155	3.7	43.3	43.3	91.2	1476	0.5	127.1		122.5

TEMPORARY WATER POLLUTION CONTROL

SHEET No.	TEMPORARY DRAINAGE INLET PROTECTION
	EA
L-1	1
L-2	4
TOTAL	5

SUMMARY OF QUANTITIES

Q-1

STATE OF CALIFORNIA - DEPARTMENT OF TRANSPORTATION
Caltrans® DESIGN BRANCH B

FUNCTIONAL SUPERVISOR: CHRISTOPHER LE
CALCULATED-DESIGNED BY: FARIBA A. KHOSRAVI
CHECKED BY: ALIX WILLIAMS
REVISED BY
DATE REVISED 01-15-13

LAST REVISION 05-25-16
DATE PLOTTED => 04-AUG-2016
TIME PLOTTED => 11:27

Dist	COUNTY	ROUTE	POST MILES TOTAL PROJECT	SHEET No.	TOTAL SHEETS
12	Ora	39	9.8/10.5	36	80

REGISTERED CIVIL ENGINEER DATE 05-09-16

06-06-16
PLANS APPROVAL DATE

REGISTERED PROFESSIONAL ENGINEER FARIBA A. KHOSRAVI No. C54265 Exp. 12/31/17 CIVIL STATE OF CALIFORNIA

THE STATE OF CALIFORNIA OR ITS OFFICERS OR AGENTS SHALL NOT BE RESPONSIBLE FOR THE ACCURACY OR COMPLETENESS OF SCANNED COPIES OF THIS PLAN SHEET.

ROADWAY QUANTITIES

SHEET No.	STATION LIMIT	REMOVE CONCRETE: SIDEWALK & CURB RAMP	REMOVE CONCRETE: CURB	REMOVE CONCRETE: SPANDRELS	MINOR CONCRETE (MISCELLANEOUS CONSTRUCTION): CURB RAMP	MINOR CONCRETE: CONCRETE CURB (A2-8)	MINOR CONCRETE: SIDEWALK	MINOR CONCRETE: SPANDRELS	DETECTABLE WARNING SURFACE	PRE / POST CONSTRUCTION SURVEYS	REMOVE MASONARY BLOCK WALL	ROADWAY EXCAVATION	CLASS 2 AGGREGATE SUBBASE	HOT MIX ASPHALT (TYPE A)	TACK COAT	ADJUST MANHOLE TO GRADE
		CY	CY	CY	CY	CY	CY	CY	SQFT	EA	CY	CY	CY	TON	TON	EA
L-1, C-1	CURB RAMP NO. 1	2.9	2.2	15.5	2.9	2.2		15.5	15	1		7.8	7.8			
L-2, C-2	CURB RAMP NO. 2	3.4	1.6	14.6	3.4	1.6		14.6	12.6	1		7.3	7.3			
L-2, C-3	CURB RAMP NO. 3	2.2	1.3	16.1	2.2	1.3		16.1	15	1		8.1	8.1			
L-2, C-4	CURB RAMP NO. 4	3.7	2.3		3.7	2.3			30	2		4.5	1.5	2.1	0.1	
L-2, C-5	CURB RAMP NO. 5	5.7	2.8		5.7	2.8			30	2		6.0	2.0	2.8	0.1	
L-2, C-6	CURB RAMP NO. 6	4.8	3.2		4.8	3.2			30	2		6.0	2.0	2.8	0.1	
L-2, C-7	CURB RAMP NO. 7	8.4	3.0		6.4	1.2	2.0		30	2		6.2	2.0	2.9	0.1	
L-2, C-5	"D" 29+06.20 TO "A" 80+08.90										4					
L-1	"A" 61+86 TO "A" 61+99	1.9	0.9			0.9	1.9									
L-1	"A" 63+56 TO "A" 63+69	1.9	0.9			0.9	1.9									
L-1	"A" 65+56 TO "A" 65+69	1.9	0.9			0.9	1.9									
L-1	"A" 67+98 TO "A" 68+11	1.9	0.9			0.9	1.9									
L-1	"A" 70+56 TO "A" 70+69	1.9	0.9			0.9	1.9									
L-2	"A" 76+76 TO "A" 76+89	1.9	0.9			0.9	1.9									
L-3	"A" 87+91 TO "A" 88+04	2.0	0.9			0.9	2.0									
L-3	"A" 90+35 TO "A" 90+48	2.3	0.9			0.9	2.3									
L-3	"A" 92+10 TO "A" 92+23	2.3	0.9			0.9	2.3									
L-3	"A" 94+50 TO "A" 94+63	2.3	0.9			0.9	2.3									
L-2	"A" 74+59															1
	SUBTOTAL	51.4	25.4	46.2	29.1	23.6	22.3	46.2	162.6	11	4	45.9	30.7	10.6	0.4	1
	TOTAL	123*			121.2*				162.6	11	4	45.9*	30.7*	10.6*	0.4*	1

* FOR GRAND TOTAL OF HOT MIX ASPHALT (TYPE A), REMOVE CONCRETE, MINOR CONCRETE (MISCELLANEOUS CONSTRUCTION), ROADWAY EXCAVATION, CLASS 2 AGGREGATE SUBBASE AND TACK COAT, SEE SHEET Q-1

SUMMARY OF QUANTITIES

Q-2

STATE OF CALIFORNIA - DEPARTMENT OF TRANSPORTATION
Caltrans
DESIGN BRANCH B
FUNCTIONAL SUPERVISOR: CHRISTOPHER LE
CALCULATED-DESIGNED BY: FARIBA A. KHOSRAVI
CHECKED BY: ALIX WILLIAMS
REVISED BY
DATE REVISED 01-15-13

LAST REVISION 4-11-16
DATE PLOTTED => 04-AUG-2016
TIME PLOTTED => 11:27

Dist	COUNTY	ROUTE	POST MILES TOTAL PROJECT	SHEET No.	TOTAL SHEETS
12	Ora	39	9.8/10.5	37	80

Mina Zolfaghari 05-09-16
REGISTERED ELECTRICAL ENGINEER DATE

06-06-16
PLANS APPROVAL DATE

REGISTERED PROFESSIONAL ENGINEER MINA ZOLFAGHARI No. E16816 Exp. 12-31-16 ELECTRICAL STATE OF CALIFORNIA

THE STATE OF CALIFORNIA OR ITS OFFICERS OR AGENTS SHALL NOT BE RESPONSIBLE FOR THE ACCURACY OR COMPLETENESS OF SCANNED COPIES OF THIS PLAN SHEET.

NOTES: (THIS SHEET ONLY)

1. FOR ACCURATE RIGHT OF WAY DATA, CONTACT RIGHT OF WAY ENGINEERING AT THE DISTRICT OFFICE.
2. RC ALL EXISTING PULL BOXES, CONDUCTORS, SIGNAL POLES, TRAFFIC AND PEDESTRIAN SIGNAL HEADS, PPB, LUMINAIRES AND SIGNS ATTACHED TO THE POLES UNLESS OTHERWISE NOTED.
3. AB ALL EXISTING LOOP DETECTORS AND CONDUITS, UNLESS OTHERWISE NOTED.

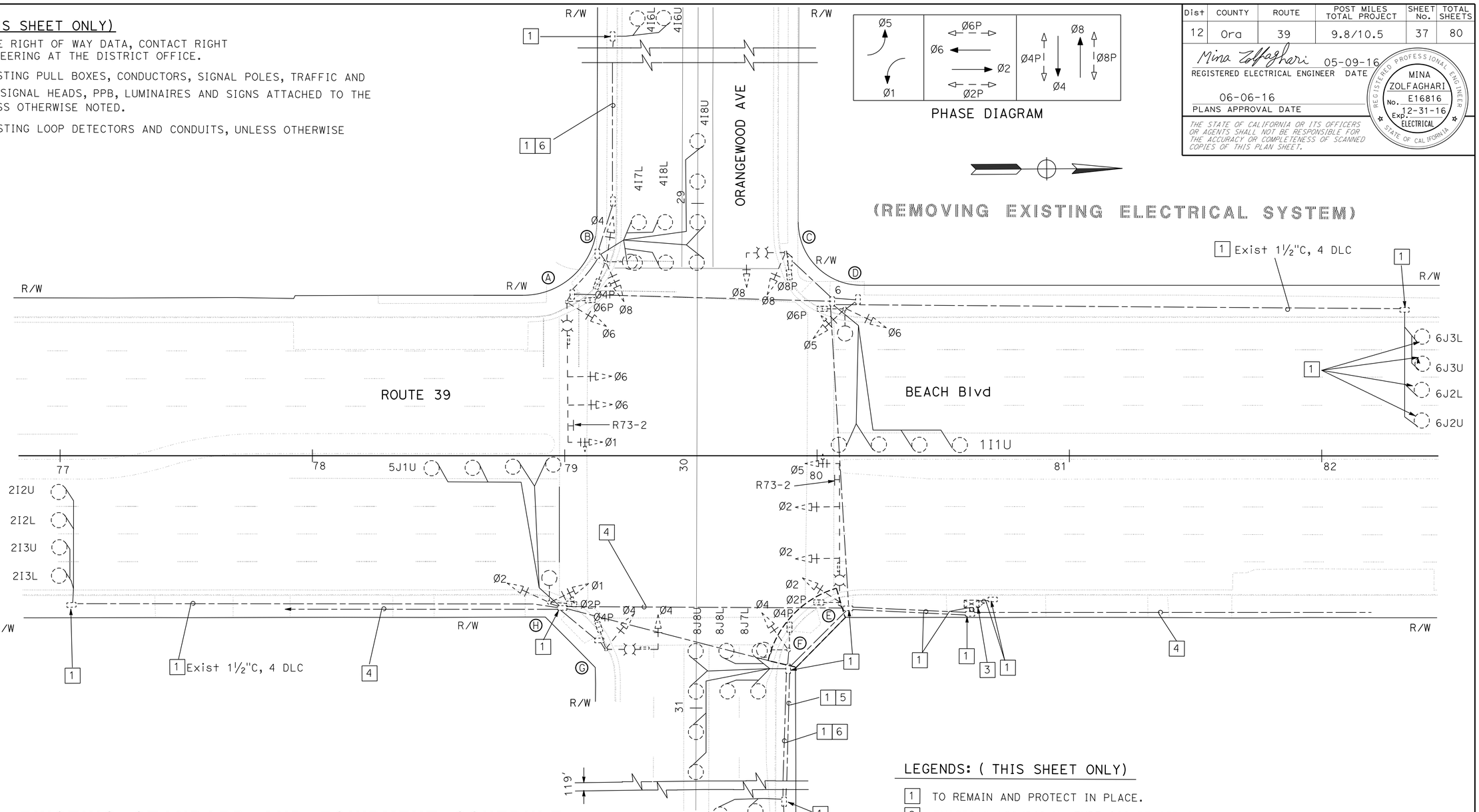

LEGENDS: (THIS SHEET ONLY)

1. TO REMAIN AND PROTECT IN PLACE.
2. EXISTING 120/240 V, TYPE III-BF SERVICE EQUIPMENT ENCLOSURE TO REMAIN.
3. EXISTING MODEL 2070 CONTROLLER ASSEMBLY IN TYPE 332 CABINET TO REMAIN.
4. Exist 2"C, 1-12 PAIR #19 SIC, PROTECT IN PLACE.
5. Exist 2"C, 2#8, 2#10, 2#12.
6. Exist 1½"C, 2 DLC.

EXISTING STANDARD AND EQUIPMENT SCHEDULE

STANDARD				VEH SIG MTG				PED SIGNAL		PPB		LUMINAIRE LED	SPECIAL REQUIREMENTS
⊗	TYPE	SMA	LMA	Ø	MAST ARM	Ø	POLE	Ø	MTG	Ø	ARROW		
A	29-5-70	55'	12'	1 6	MAT 2-MAS	6	SV-1-T	6	SP-1-T	4	←	183 W	Orangewood Ave
B	19A-1-161		15'			4,8	SV-2-TA	4	SP-1-T	6	→	183 W	
C	17-2-80	20'	12'	8	MAS	8	SV-1-T	8	SP-1-T	6	←	183 W	Beach Blvd
D	15TS		15'			5,6	SV-2-TA	6	SP-1-T	8	→	183 W	
E	29-5-70	55'	12'	5 2	MAT 2-MAS	2	SV-1-T	2	SP-1-T	8	←	183 W	Orangewood Ave
F	19A-1-161		15'			4	SV-2-TA	4	SP-1-T	2	→	183 W	
G	17-2-80	20'	12'	4	MAS	4	SV-1-T	4	SP-1-T	2	←	183 W	Beach Blvd
H	19A-1-161		15'			1,2	SV-2-TA	2	SP-1-T	4	→	183 W	

APPROVED FOR ELECTRICAL WORK ONLY

MODIFYING EXISTING ELECTRICAL SYSTEM

SCALE: 1" = 20'

E-1

STATE OF CALIFORNIA - DEPARTMENT OF TRANSPORTATION
Caltrans® ELECTRICAL DESIGN

FUNCTIONAL SUPERVISOR: SHAHRAM SHAHRIARI
CALCULATED-DESIGNED BY: MINA ZOLFAGHARI
CHECKED BY: VANESSA TRUONG
REVISED BY: MZ
DATE REVISED: 03-11-16

LAST REVISION DATE PLOTTED => 04-AUG-2016
00-00-00 TIME PLOTTED => 11:27

Dist	COUNTY	ROUTE	POST MILES TOTAL PROJECT	SHEET No.	TOTAL SHEETS
12	Ora	39	9.8/10.5	38	80

Mina Zolfaghari 05-09-16
REGISTERED ELECTRICAL ENGINEER DATE

06-06-16
PLANS APPROVAL DATE

REGISTERED PROFESSIONAL ENGINEER MINA ZOLFAGHARI No. E16816 Exp. 12-31-16 ELECTRICAL STATE OF CALIFORNIA

THE STATE OF CALIFORNIA OR ITS OFFICERS OR AGENTS SHALL NOT BE RESPONSIBLE FOR THE ACCURACY OR COMPLETENESS OF SCANNED COPIES OF THIS PLAN SHEET.

CONDUCTOR AND CONDUIT SCHEDULE

CONDUCTOR	CONDUCTOR RUN	1	2	3	4	5	6	7	8	9	10
12CSC	VEHICLE SIGNALS	1	3	4	5	1	2	4		10	10
3CSC	PPB	1	2	3	4	1	2	3		8	8
#8	SERVICE							2		2	2
#10	LUMINAIRE	2	2	2	2	2	2	2			
#12	IISNS	2	2	2	2		2	2			
9#20	APS	1		1		1		1			
DLC	Ø1 DETECTOR				1					1	1
	Ø2 DETECTOR					4	4	4		4	4
	Ø4 DETECTOR		5	5	5					5	5
	Ø5 DETECTOR					1	1	1		1	1
	Ø6 DETECTOR				4					4	4
	Ø8 DETECTOR							5		5	5
12-PR#19 SIC									1	1	2
CONDUIT SIZE		2½"	3"	4"	2-3"	2½"	3"	4"	2"	2-4" 1-2"	2-3" (E)
PERCENT CONDUIT FILL		17%	24%	25%	23%	23%	24%	23%	11%	26% / 11%	51%

(E) = EXISTING

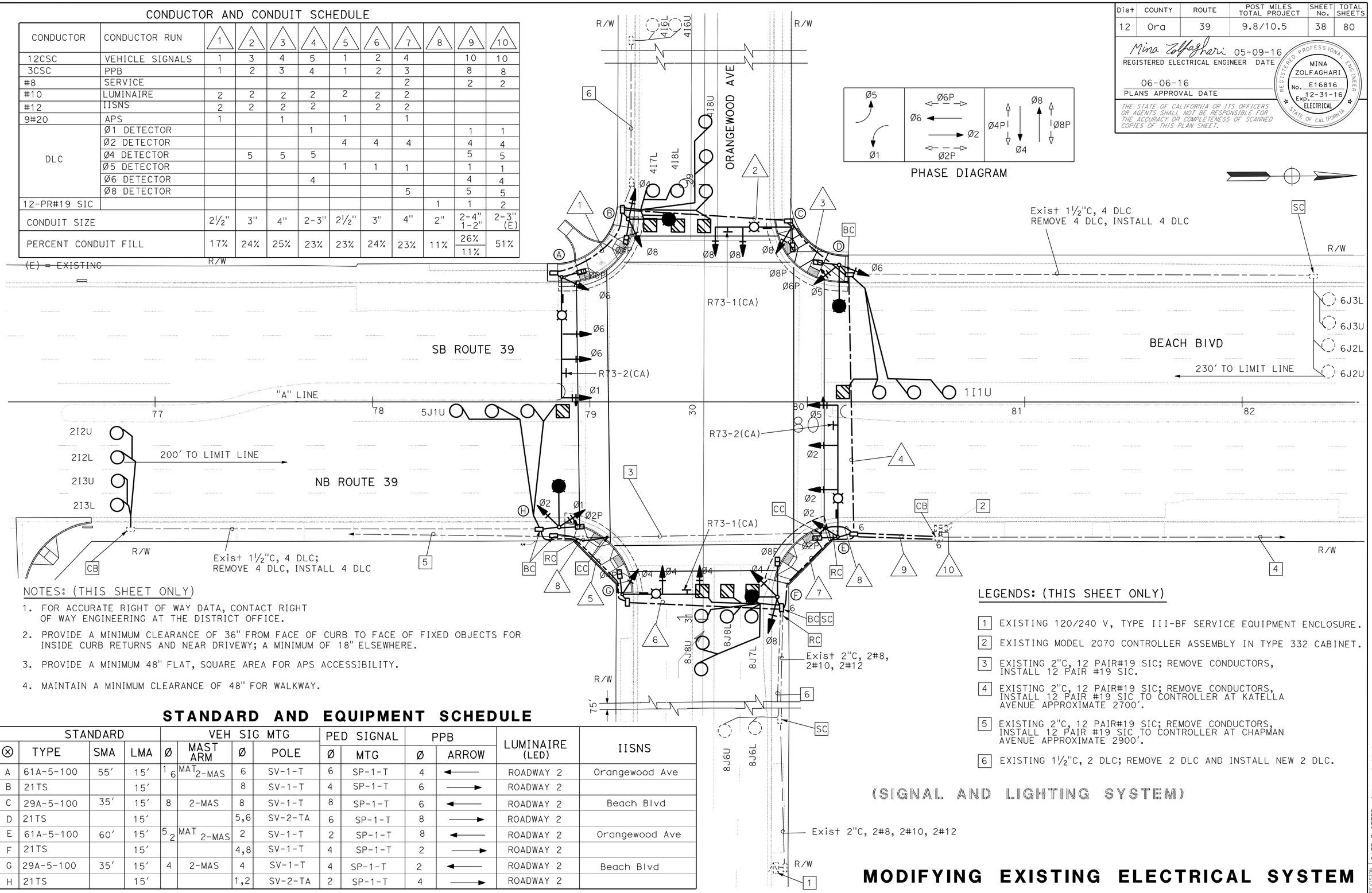

NOTES: (THIS SHEET ONLY)

1. FOR ACCURATE RIGHT OF WAY DATA, CONTACT RIGHT OF WAY ENGINEERING AT THE DISTRICT OFFICE.
2. PROVIDE A MINIMUM CLEARANCE OF 36" FROM FACE OF CURB TO FACE OF FIXED OBJECTS FOR INSIDE CURB RETURNS AND NEAR DRIVEWY; A MINIMUM OF 18" ELSEWHERE.
3. PROVIDE A MINIMUM 48" FLAT, SQUARE AREA FOR APS ACCESSIBILITY.
4. MAINTAIN A MINIMUM CLEARANCE OF 48" FOR WALKWAY.

LEGENDS: (THIS SHEET ONLY)

1. EXISTING 120/240 V, TYPE III-BF SERVICE EQUIPMENT ENCLOSURE.
2. EXISTING MODEL 2070 CONTROLLER ASSEMBLY IN TYPE 332 CABINET.
3. EXISTING 2"C, 12 PAIR#19 SIC; REMOVE CONDUCTORS, INSTALL 12 PAIR #19 SIC.
4. EXISTING 2"C, 12 PAIR#19 SIC; REMOVE CONDUCTORS, INSTALL 12 PAIR #19 SIC TO CONTROLLER AT KATELLA AVENUE APPROXIMATE 2700'.
5. EXISTING 2"C, 12 PAIR#19 SIC; REMOVE CONDUCTORS, INSTALL 12 PAIR #19 SIC TO CONTROLLER AT CHAPMAN AVENUE APPROXIMATE 2900'.
6. EXISTING 1½"C, 2 DLC; REMOVE 2 DLC AND INSTALL NEW 2 DLC.

STANDARD AND EQUIPMENT SCHEDULE

STANDARD				VEH SIG MTG				PED SIGNAL		PPB		LUMINAIRE (LED)	IISNS
⊗	TYPE	SMA	LMA	Ø	MAST ARM	Ø	POLE	Ø	MTG	Ø	ARROW		
A	61A-5-100	55'	15'	1 6	MAT 2-MAS	6	SV-1-T	6	SP-1-T	4	←	ROADWAY 2	Orangewood Ave
B	21TS		15'			8	SV-1-T	4	SP-1-T	6	→	ROADWAY 2	
C	29A-5-100	35'	15'	8	2-MAS	8	SV-1-T	8	SP-1-T	6	←	ROADWAY 2	Beach Blvd
D	21TS		15'			5,6	SV-2-TA	6	SP-1-T	8	→	ROADWAY 2	
E	61A-5-100	60'	15'	5 2	MAT 2-MAS	2	SV-1-T	2	SP-1-T	8	←	ROADWAY 2	Orangewood Ave
F	21TS		15'			4,8	SV-1-T	4	SP-1-T	2	→	ROADWAY 2	
G	29A-5-100	35'	15'	4	2-MAS	4	SV-1-T	4	SP-1-T	2	←	ROADWAY 2	Beach Blvd
H	21TS		15'			1,2	SV-2-TA	2	SP-1-T	4	→	ROADWAY 2	

APPROVED FOR ELECTRICAL WORK ONLY

MODIFYING EXISTING ELECTRICAL SYSTEM

SCALE: 1" = 20'

E-2

STATE OF CALIFORNIA - DEPARTMENT OF TRANSPORTATION
Caltrans® ELECTRICAL DESIGN

FUNCTIONAL SUPERVISOR: SHAHRAM SHAHRIARI
CALCULATED-DESIGNED BY: MINA ZOLFAGHARI
CHECKED BY: VANESSA TRUONG
REVISED BY: MZ
DATE REVISED: 05-30-13

LAST REVISION
DATE PLOTTED => 04-AUG-2016
TIME PLOTTED => 11:28
12-08-15

Dist	COUNTY	ROUTE	POST MILES TOTAL PROJECT	SHEET No.	TOTAL SHEETS
12	Ora	39	9.8/10.5	39	80

Mina Zolfaghari 05-09-16
REGISTERED ELECTRICAL ENGINEER DATE

06-06-16
PLANS APPROVAL DATE

REGISTERED PROFESSIONAL ENGINEER MINA ZOLFAGHARI No. E16816 Exp. 12-31-16 ELECTRICAL STATE OF CALIFORNIA

THE STATE OF CALIFORNIA OR ITS OFFICERS OR AGENTS SHALL NOT BE RESPONSIBLE FOR THE ACCURACY OR COMPLETENESS OF SCANNED COPIES OF THIS PLAN SHEET.

NOTE: (THIS SHEET ONLY)

1. ITEMS SHOWN IN THIS TABLE ARE NOT A SEPARATE PAY ITEM, FOR INFORMATION ONLY.

MODIFYING EXISTING ELECTRICAL SYSTEM

SHEET No.	CONDUIT				CONDUCTORS					PULL BOX		LOOP DETECTOR		DLC	12" 3-SECTION SIGNAL HEAD	12CSC CABLE	3CSC CABLE	RC					
	2"	2½"	3"	4"	#8	#10	#12	9#20	12 PAIR #19 SIC	#5	#6	TYPE D	TYPE E					17-2-80	19A-1-161	29-5-70	15TS	12" 3-SECTION SIGNAL HEAD	PEDESTRIAN SIGNAL HEAD
	LF	LF	LF	LF	LF	LF	LF	LF	LF	EA	EA	EA	EA	LF	EA	LF	LF	EA	EA	EA	EA	EA	EA
E-1	-	-	-	-	-	-	-	-	-	-	-	-	-	-	-	-	-	2	3	2	1	19	8
E-2	76	100	384	160	182	904	788	376	5600	7	2	8	20	6045	22	1800	1442	-	-	-	-	-	-

MODIFYING EXISTING ELECTRICAL SYSTEM

SHEET No.	RC				STANDARDS			IISNS	APS PPB	LED COUNTDOWN PEDESTRIAN SIGNAL HEAD	VEH SIG MTG		PED SIG MTG	LED LUMINAIRE ROADWAY 2	BC	CC	CB
	PULL BOX	PPB	LUMINAIRE	IISNS	TYPE 21TS WITH 15' LMA	29A-5-100 WITH 15' LMA	61A-5-100 WITH 15' LMA				SV-1-T	SV-2-TA	SP-1-T				
	EA	EA	EA	EA	EA	EA	EA	EA	EA	EA	EA	EA	EA	EA	EA	EA	EA
E-1	6	8	8	4	-	-	-	-	-	-	-	-	-	-	-	-	-
E-2	3	-	-	-	4	2	2	4	8	8	6	2	8	8	4	2	2

ELECTRICAL QUANTITIES

E-3

REVISED BY	DATE REVISED
MZ	03-11-16

MINA ZOLFAGHARI
VANESSA TRUONG
CALCULATED-DESIGNED BY
CHECKED BY
FUNCTIONAL SUPERVISOR
SHAHRAM SHAHRIARI

STATE OF CALIFORNIA - DEPARTMENT OF TRANSPORTATION
Caltrans
ELECTRICAL DESIGN

LAST REVISION 00-00-00
DATE PLOTTED => 04-AUG-2016
TIME PLOTTED => 11:28

M

Maint	MAINTENANCE
Max	MAXIMUM
MB	METAL BEAM
MBB	METAL BEAM BARRIER
MBGR	METAL BEAM GUARD RAILING
Med	MEDIAN
MGS	MIDWEST GUARDRAIL SYSTEM
MH	MANHOLE
Min	MINIMUM
Misc	MISCELLANEOUS
Misc I & S	MISCELLANEOUS IRON AND STEEL
Mkr	MARKER
Mod	MODIFIED,
	MODIFY
Mon	MONUMENT
MP	METAL PLATE
MPGR	METAL PLATE GUARD RAILING
MR	MOVEMENT RATING
MSE	MECHANICALLY STABILIZED EMBANKMENT
Mt	MOUNTAIN, MOUNT
Mtl	MATERIAL
MVP	MAINTENANCE VEHICLE PULLOUT

N

N	NORTH
NB	NORTHBOUND
No.	NUMBER (MUST HAVE PERIOD)
Nos.	NUMBERS (MUST HAVE PERIOD)
NPS	NOMINAL PIPE SIZE
NS	NEAR SIDE
NSP	NEW STANDARD PLAN
NTS	NOT TO SCALE

O

Oblr	OBLITERATE
OC	OVERCROSSING
OD	OUTSIDE DIAMETER
OF	OUTSIDE FACE
OG	ORIGINAL GROUND
OGAC	OPEN GRADED ASPHALT CONCRETE
OGFC	OPEN GRADED FRICTION COURSE
OH	OVERHEAD
OHWM	ORDINARY HIGH WATER MARK
O-O	OUT TO OUT
Opp	OPPOSITE
OSD	OVERSIDE DRAIN

P

P	PAGE
PAP	PERFORATED ALUMINUM PIPE
PB	PULL BOX
PC	POINT OF CURVATURE,
	PRECAST
PCC	POINT OF COMPOUND CURVE,
	PORTLAND CEMENT CONCRETE
PCMS	PORTABLE CHANGEABLE MESSAGE SIGN
PCP	PERFORATED CONCRETE PIPE,
	PRESTRESSED CONCRETE PIPE
PCVC	POINT OF COMPOUND VERTICAL CURVE
PEC	PERMIT TO ENTER AND CONSTRUCT
Ped	PEDESTRIAN
Ped OC	PEDESTRIAN OVERCROSSING
Ped UC	PEDESTRIAN UNDERCROSSING
Perm Mtl	PERMEABLE MATERIAL

P continued

PG	PROFILE GRADE
PI	POINT OF INTERSECTION
PJP	PARTIAL JOINT PENETRATION
Pkwy	PARKWAY
ℙ,PL	PLATE
P/L	PROPERTY LINE
PM	POST MILE,
	TIME FROM NOON TO MIDNIGHT
PN	PAVING NOTCH
POC	POINT OF HORIZONTAL CURVE
POT	POINT OF TANGENT
POVC	POINT OF VERTICAL CURVE
PP	PIPE PILE,
	PLASTIC PIPE,
	POWER POLE
PPL	PREFORMED PERMEABLE LINER
PPP	PERFORATED PLASTIC PIPE
PRC	POINT OF REVERSE CURVE
PRF	PAVEMENT REINFORCING FABRIC
PRVC	POINT OF REVERSE VERTICAL CURVE
PS&E	PLANS, SPECIFICATIONS AND ESTIMATES
PS, P/S	PRESTRESSED
PSP	PERFORATED STEEL PIPE
PT	POINT OF TANGENCY
PVC	POLYVINYL CHLORIDE
Pvmt	PAVEMENT

Q

Qty	QUANTITY

R

R	RADIUS
R & D	REMOVE AND DISPOSE
R & S	REMOVE AND SALVAGE
R/C	RATE OF CHANGE
RCA	REINFORCED CONCRETE ARCH
RCB	REINFORCED CONCRETE BOX
RCP	REINFORCED CONCRETE PIPE
RCPA	REINFORCED CONCRETE PIPE ARCH
Rd	ROAD
Reinf	REINFORCED,
	REINFORCEMENT,
	REINFORCING
Rel	RELOCATE
Repl	REPLACEMENT
Ret	RETAINING
Rev	REVISED, REVISION
Rdwy	ROADWAY
RHMA	RUBBERIZED HOT MIX ASPHALT
Riv	RIVER
RM	ROAD-MIXED
RP	RADIUS POINT,
	REFERENCE POINT
RR	RAILROAD
RSP	ROCK SLOPE PROTECTION,
	REVISED STANDARD PLAN
Rt	RIGHT
Rte	ROUTE
RW	REDWOOD,
	RETAINING WALL
R/W	RIGHT OF WAY
Rwy	RAILWAY

S

S	SOUTH,
	SUPPLEMENT
SAE	STRUCTURE APPROACH EMBANKMENT
Salv	SALVAGE
SAPP	STRUCTURAL ALUMINUM PLATE PIPE
SB	SOUTHBOUND
SC	SAND CUSHION
SCSP	SLOTTED CORRUGATED STEEL PIPE
SD	STORM DRAIN
Sec	SECOND,
	SECTION
Sep	SEPARATION
SG	SUBGRADE
Shld	SHOULDER
Sht	SHEET
Sim	SIMILAR
℄	STATION LINE
SM	SELECTED MATERIAL
Spec	SPECIAL,
	SPECIFICATIONS
SPP	SLOTTED PLASTIC PIPE
SS	SLOPE STAKE
SSBM	STRAP AND SADDLE BRACKET METHOD
SSD	STRUCTURAL SECTION DRAIN
SSPA	STRUCTURAL STEEL PLATE ARCH
SSPP	STRUCTURAL STEEL PLATE PIPE
SSPPA	STRUCTURAL STEEL PLATE PIPE ARCH
SSRP	STEEL SPIRAL RIB PIPE
St	STREET
Sta	STATION
STBB	SINGLE THRIE BEAM BARRIER
Std	STANDARD
Str	STRUCTURE
Surf	SURFACING
SW	SIDEWALK,
	SOUND WALL
Swr	SEWER
Sym	SYMMETRICAL
S4S	SURFACE 4 SIDES

T

T	SEMI-TANGENT
Tan	TANGENT
TBB	THRIE BEAM BARRIER
Tbr	TIMBER
TC	TOP OF CURB
TCB	TRAFFIC CONTROL BOX
TCE	TEMPORARY CONSTRUCTION EASEMENT
Tel	TELEPHONE
Temp	TEMPORARY
TG	TOP OF GRADE
Tot	TOTAL
TP	TELEPHONE POLE
TPB	TREATED PERMEABLE BASE
TPM	TREATED PERMEABLE MATERIAL
Trans	TRANSITION

T continued

TS	TRANSVERSE,
	TRAFFIC SIGNAL,
	TUBULAR STEEL
Typ	TYPICAL

U

UC	UNDERCROSSING
UD	UNDERDRAIN
UG	UNDERGROUND
UON	UNLESS OTHERWISE NOTED
UP	UNDERPASS

V

V	VALVE,
	DESIGN SPEED
Var	VARIABLE,
	VARIES
VC	VERTICAL CURVE
VCP	VITRIFIED CLAY PIPE
Vert	VERTICAL
Via	VIADUCT
Vol	VOLUME

W

W	WEST,
	WIDTH
WB	WESTBOUND
WH	WEEP HOLE
WM	WIRE MESH
WS	WATER SURFACE
WSP	WELDED STEEL PIPE
Wt	WEIGHT
WV	WATER VALVE
WW	WINGWALL
WWLOL	WINGWALL LAYOUT LINE

X

X Sec	CROSS SECTION
Xing	CROSSING

Y

Yr	YEAR
Yrs	YEARS

Dist	COUNTY	ROUTE	POST MILES TOTAL PROJECT	SHEET No.	TOTAL SHEETS
12	Ora	39	9.8/10.5	40	80

Grace M. Tsushima
REGISTERED CIVIL ENGINEER

July 19, 2013
PLANS APPROVAL DATE

REGISTERED PROFESSIONAL ENGINEER
Grace M. Tsushima
No. C49814
Exp. 9-30-14
CIVIL
STATE OF CALIFORNIA

THE STATE OF CALIFORNIA OR ITS OFFICERS OR AGENTS SHALL NOT BE RESPONSIBLE FOR THE ACCURACY OR COMPLETENESS OF SCANNED COPIES OF THIS PLAN SHEET.

TO ACCOMPANY PLANS DATED 06-06-2016

UNIT OF MEASUREMENT SYMBOLS:

Some of the symbols used in the project plan quantity tables and in the Bid Item List are:

TABLE A

SYMBOL USED	DEFINITIONS
ACRE	ACRE
CF	CUBIC FOOT
CY	CUBIC YARD
EA	EACH
GAL	GALLON
LB	POUND
LF	LINEAR FOOT
SQFT	SQUARE FOOT
SQYD	SQUARE YARD
STA	100 FEET
TAB	TABLET
TON	2,000 POUNDS

Some of the symbols used in the plans other than in the project plan quantity tables are:

TABLE B

SYMBOL USED	DEFINITIONS
ksi	KIPS PER SQUARE INCH
ksf	KIPS PER SQUARE FOOT
psi	POUNDS PER SQUARE INCH
psf	POUNDS PER SQUARE FOOT
lb/ft^3, pcf	POUNDS PER CUBIC FOOT
tsf	TONS PER SQUARE FOOT
mph, MPH *	MILES PER HOUR
ø	NOMINAL DIAMETER
oz	OUNCE
lb	POUND
kip	1,000 POUNDS
cal	CALORIE
ft	FOOT OR FEET
gal	GALLON

* For use on a sign panel only

STATE OF CALIFORNIA
DEPARTMENT OF TRANSPORTATION

ABBREVIATIONS (SHEET 2 OF 2)

NO SCALE

RSP A10B DATED JULY 19, 2013 SUPERSEDES STANDARD PLAN A10B DATED MAY 20, 2011 - PAGE 2 OF THE STANDARD PLANS BOOK DATED 2010.

REVISED STANDARD PLAN RSP A10B

2010 REVISED STANDARD PLAN RSP A10B

6-7-13

Dist	COUNTY	ROUTE	POST MILES TOTAL PROJECT	SHEET No.	TOTAL SHEETS
12	Ora	39	9.8/10.5	41	80

REGISTERED CIVIL ENGINEER

July 20, 2012
PLANS APPROVAL DATE

REGISTERED PROFESSIONAL ENGINEER
Roberta L. McLaughlin
No. C40375
Exp. 3-31-13
CIVIL
STATE OF CALIFORNIA

THE STATE OF CALIFORNIA OR ITS OFFICERS OR AGENTS SHALL NOT BE RESPONSIBLE FOR THE ACCURACY OR COMPLETENESS OF SCANNED COPIES OF THIS PLAN SHEET.

TO ACCOMPANY PLANS DATED 06-06-2016

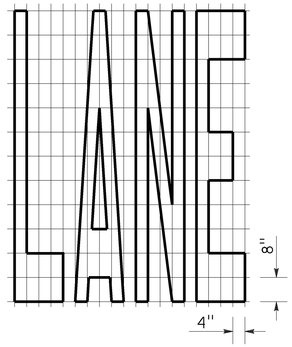

A=24 ft^2

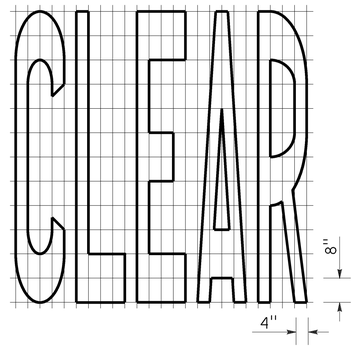

A=27 ft^2

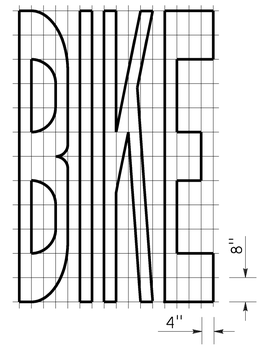

A=21 ft^2

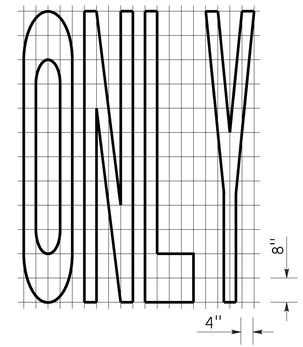

A=22 ft^2

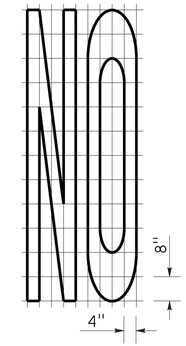

A=14 ft^2

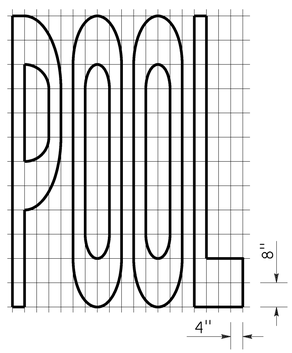

A=23 ft^2

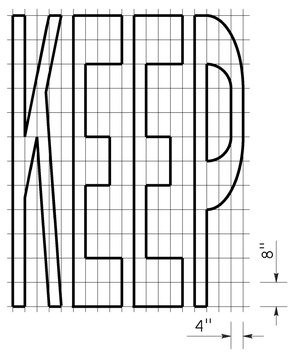

A=24 ft^2

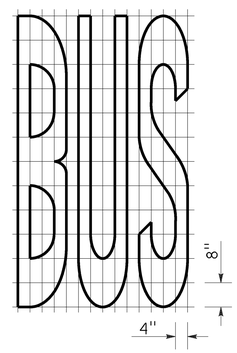

A=20 ft^2

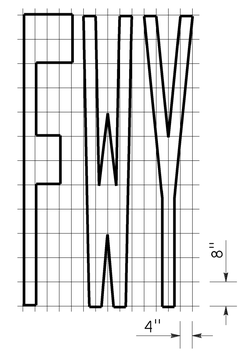

A=16 ft^2

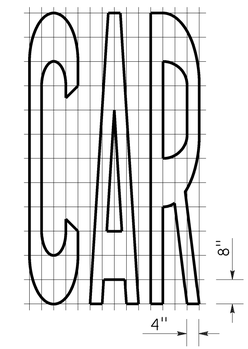

A=17 ft^2

WORD MARKINGS			
ITEM	ft^2	ITEM	ft^2
LANE	24	NO	14
POOL	23	BIKE	21
CAR	17	BUS	20
CLEAR	27	ONLY	22
KEEP	24	FWY	16

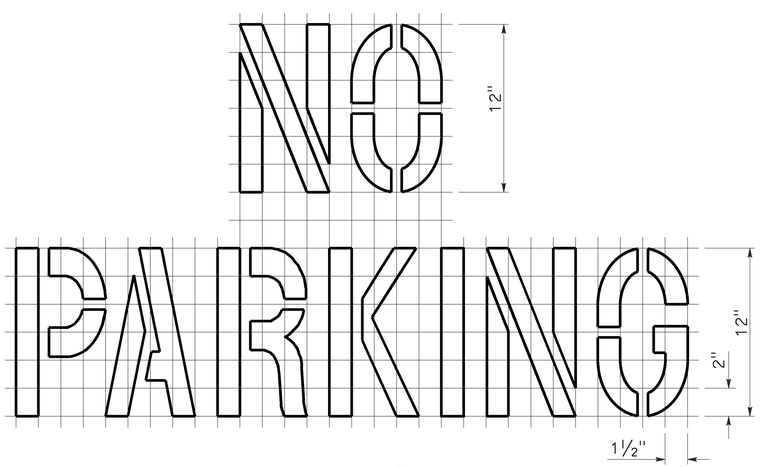

A=2 ft^2
See Notes 6 and 7

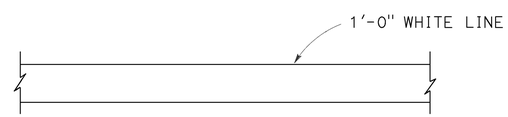

LIMIT LINE (STOP LINE)

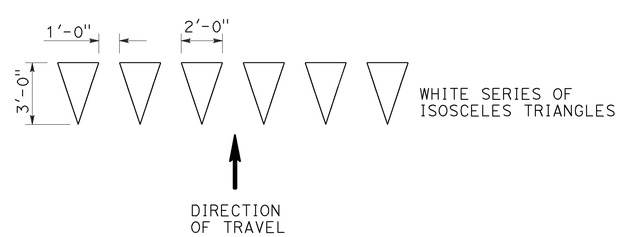

YIELD LINE

NOTES:

1. If a message consists of more than one word, it should read "UP", i.e., the first word should be nearest the driver.
2. The space between words should be at least four times the height of the characters for low speed roads, but not more than ten times the height of the characters. The space may be reduced appropriately where there is limited space because of local conditions.
3. Minor variations in dimensions may be accepted by the Engineer.
4. Portions of a letter, number or symbol may be separated by connecting segments not to exceed 2" in width.
5. The words "NO PARKING" pavement marking is to be used for parking facilities. For typical locations of markings, see Standard Plans A90A and A90B.
6. The words "NO PARKING", shall be painted in white letters no less than 1'-0" high on a contrasting background and located so that it is visible to traffic enforcement officials.

STATE OF CALIFORNIA
DEPARTMENT OF TRANSPORTATION

PAVEMENT MARKINGS WORDS, LIMIT AND YIELD LINES

NO SCALE

RSP A24E DATED JULY 20, 2012 SUPERSEDES STANDARD PLAN A24E
DATED MAY 20, 2011 - PAGE 17 OF THE STANDARD PLANS BOOK DATED 2010.

REVISED STANDARD PLAN RSP A24E

2010 REVISED STANDARD PLAN RSP A24E

6-12-12

Dist	COUNTY	ROUTE	POST MILES TOTAL PROJECT	SHEET No.	TOTAL SHEETS
12	Ora	39	9.8/10.5	42	80

Roberta L. McLaughlin
REGISTERED CIVIL ENGINEER

July 20, 2012
PLANS APPROVAL DATE

REGISTERED PROFESSIONAL ENGINEER
Roberta L. McLaughlin
No. C40375
Exp. 3-31-13
CIVIL
STATE OF CALIFORNIA

THE STATE OF CALIFORNIA OR ITS OFFICERS OR AGENTS SHALL NOT BE RESPONSIBLE FOR THE ACCURACY OR COMPLETENESS OF SCANNED COPIES OF THIS PLAN SHEET.

TO ACCOMPANY PLANS DATED 06-06-2016

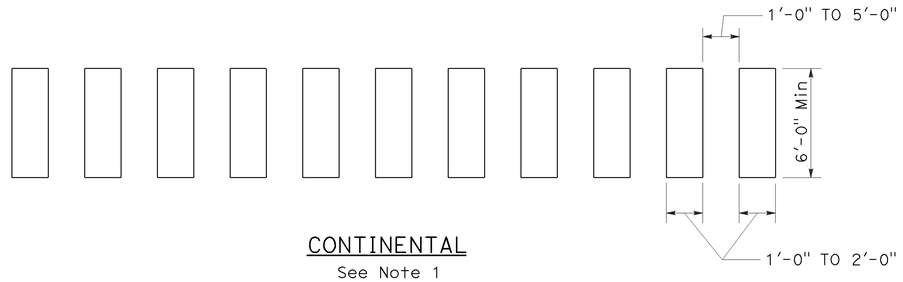

CONTINENTAL
See Note 1

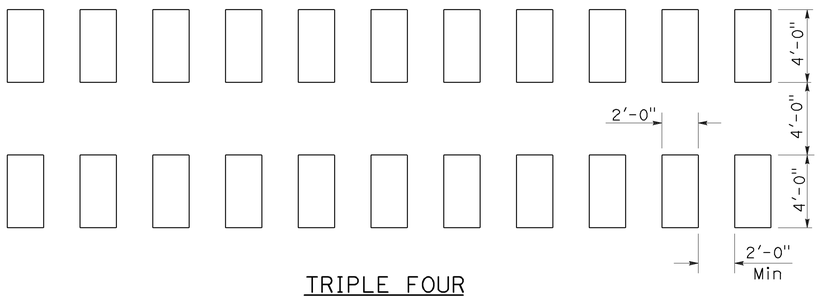

TRIPLE FOUR
See Note 1

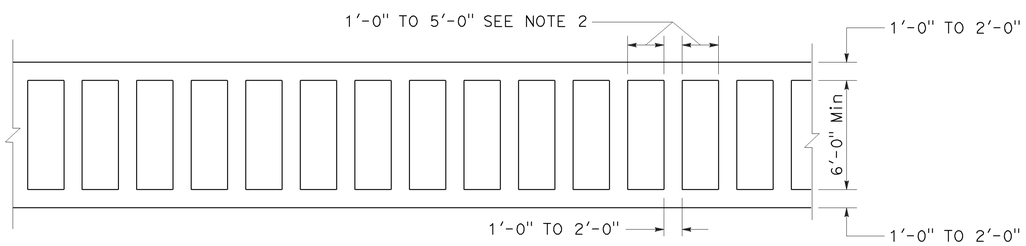

LADDER

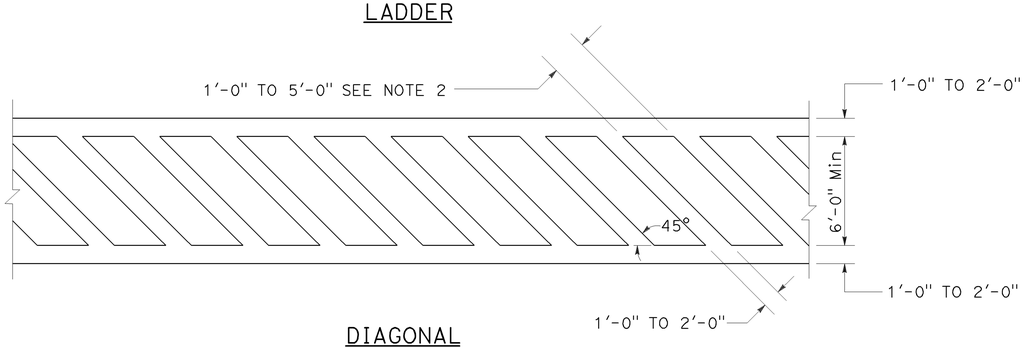

DIAGONAL

HIGHER VISIBILITY CROSSWALKS

NOTES:

1. Spaces between markings should be placed in wheel tracks of each lane.
2. Spacings not to exceed 2.5 times width of longitudinal line.
3. All crosswalk markings must be white except for those near schools must be yellow.

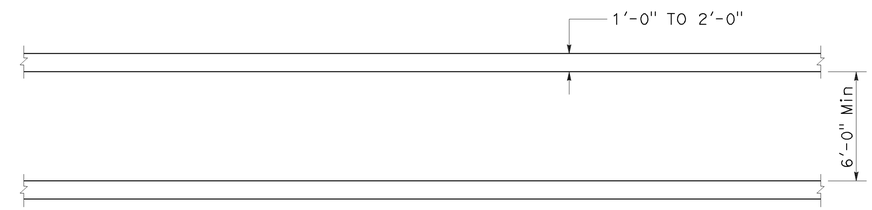

BASIC

STATE OF CALIFORNIA
DEPARTMENT OF TRANSPORTATION

PAVEMENT MARKINGS CROSSWALKS

NO SCALE

RSP A24F DATED JULY 20, 2012 SUPPLEMENTS THE STANDARD PLANS BOOK DATED 2010.

REVISED STANDARD PLAN RSP A24F

2010 REVISED STANDARD PLAN RSP A24F

6-28-12

Dist	COUNTY	ROUTE	POST MILES TOTAL PROJECT	SHEET No.	TOTAL SHEETS
12	Ora	39	9.8/10.5	43	80

REGISTERED CIVIL ENGINEER

July 19, 2013
PLANS APPROVAL DATE

REGISTERED PROFESSIONAL ENGINEER Michael Janzen No. 44788 Exp. 03-31-14 CIVIL STATE OF CALIFORNIA

THE STATE OF CALIFORNIA OR ITS OFFICERS OR AGENTS SHALL NOT BE RESPONSIBLE FOR THE ACCURACY OR COMPLETENESS OF SCANNED COPIES OF THIS PLAN SHEET.

TO ACCOMPANY PLANS DATED 06-06-2016

2010 REVISED STANDARD PLAN RSP A87A

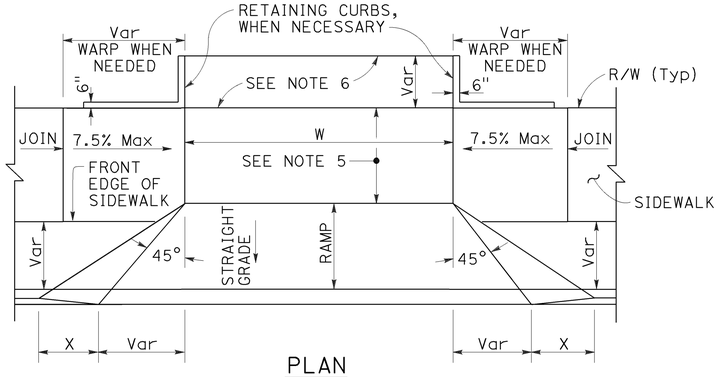

PLAN

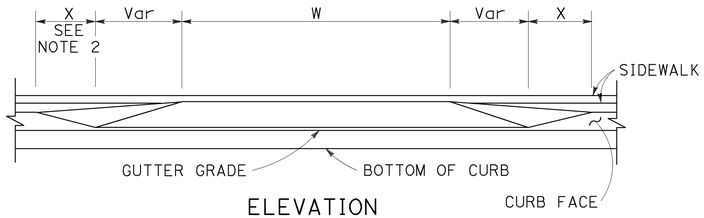

ELEVATION

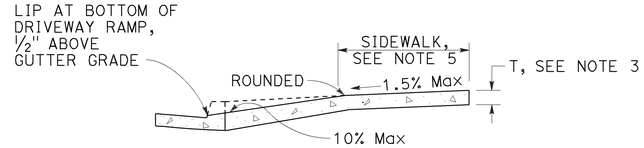

CASE A

Typical driveway, sidewalk not depressed

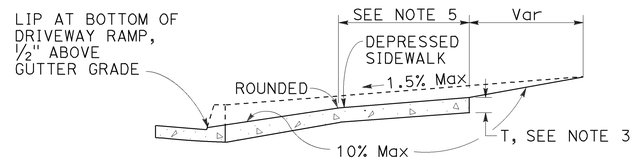

CASE B

Driveway with depressed sidewalk

SECTIONS

DRIVEWAYS

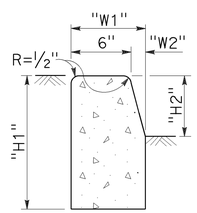

TYPE A1 CURBS

See Table A

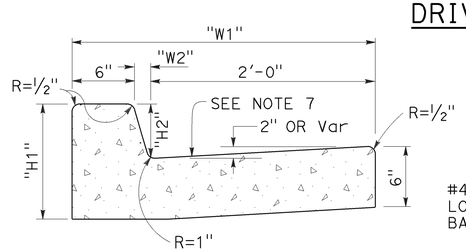

TYPE A2 CURBS

See Table A

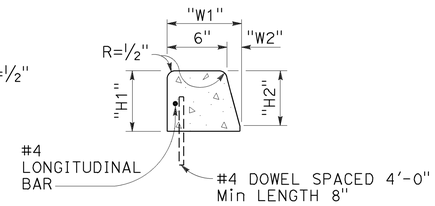

TYPE A3 CURBS

Superimposed on existing pavement
See Table A

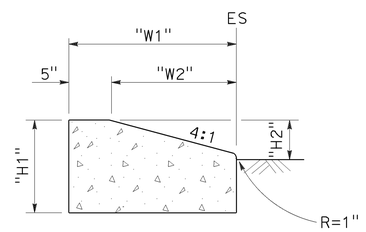

TYPE D CURBS

See Table A

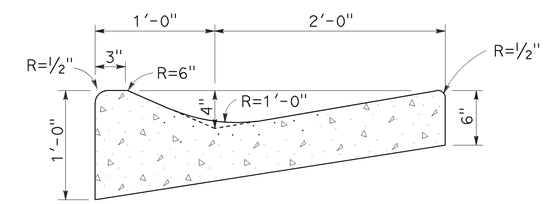

TYPE E CURB

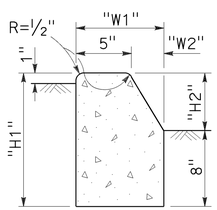

TYPE B1 CURBS

See Table A

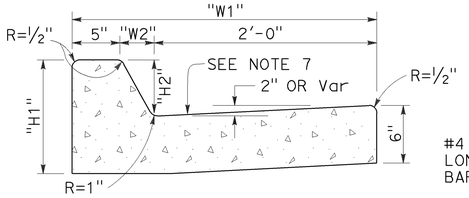

TYPE B2 CURBS

See Table A

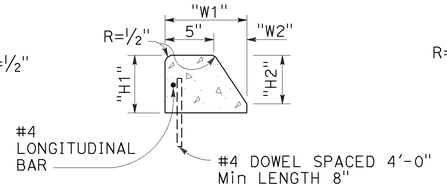

TYPE B3 CURBS

Superimposed on existing pavement
See Table A

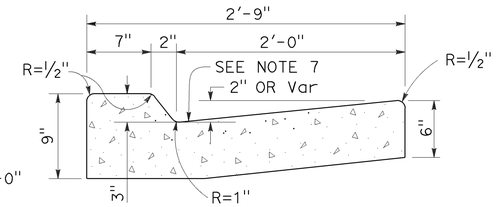

TYPE B4 CURBS

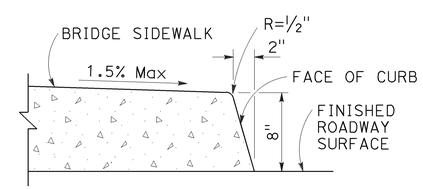

TYPE H CURB

On Bridges

CURBS

TABLE A

CURB TYPE	DIMENSIONS			
	"H1"	"H2"	"W1"	"W2"
A1-6	1'-2"	6"	7½"	1½"
A1-8	1'-4"	8"	8"	2"
A2-6	1'-0"	6"	2'-7½"	1½"
A2-8	1'-2"	8"	2'-8"	2"
A3-6	6"	5"	7¼"	1¼"
A3-8	8"	7"	7¾"	1¾"
B1-4	1'-0"	4"	7½"	2½"
B1-6	1'-2"	6"	9"	4"
B2-4	10"	4"	2'-7½"	2½"
B2-6	1'-0"	6"	2'-9"	4"
B3-4	4"	3"	7"	2"
B3-6	6"	5"	8½"	3½"
D-4	10"	4"	1'-6"	1'-1"
D-6	1'-0"	6"	2'-2"	1'-9"

CURB QUANTITIES

TYPE	CUBIC YARDS PER LINEAR FOOT
A1-6	0.02585
A1-8	0.03084
A2-6	0.05903
A2-8	0.06379
A3-6	0.01036
A3-8	0.01435
B1-4	0.02185
B1-6	0.02930
B2-4	0.05515
B2-6	0.06171
B3-4	0.00641
B3-6	0.01074
B4	0.05709
D-4	0.04083
D-6	0.06804
E	0.06661

NOTES:

1. Case A driveway section typically applies.
2. X=3'-0" except for curb heights over 10" where 4:1 slopes shall be used on curb slope.
3. Sidewalk and ramp thickness "T" at driveway shall be 4" for residental and 6" for commercial.
4. Difference in slope of the driveway ramp and the slope of a line between the gutter and a point on the roadway 5'-0" from gutter line shall not exceed 15%. Reduce driveway ramp slope, not gutter slope, where required.
5. Minimum width of clear passageway for sidewalk shall be 4'-2".
6. Retaining curbs and acquisition of construction easement may be necessary for narrow sidewalks or curb heights in excess of 6".
7. Across the pedestrian route at curb ramp locations, the gutter pan slope shall not exceed 1" of depth for each 2'-0" of width.

STATE OF CALIFORNIA
DEPARTMENT OF TRANSPORTATION

CURBS AND DRIVEWAYS

NO SCALE

RSP A87A DATED JULY 19, 2013 SUPERSEDES STANDARD PLAN A87A
DATED MAY 20, 2011 - PAGE 119 OF THE STANDARD PLANS BOOK DATED 2010.

REVISED STANDARD PLAN RSP A87A

7-8-13

Dist	COUNTY	ROUTE	POST MILES TOTAL PROJECT	SHEET No.	TOTAL SHEETS
12	Ora	39	9.8/10.5	44	80

REGISTERED CIVIL ENGINEER

July 15, 2016
PLANS APPROVAL DATE

REGISTERED PROFESSIONAL ENGINEER Hector David Cordova No. C41957 Exp. 3-31-18 CIVIL STATE OF CALIFORNIA

THE STATE OF CALIFORNIA OR ITS OFFICERS OR AGENTS SHALL NOT BE RESPONSIBLE FOR THE ACCURACY OR COMPLETENESS OF SCANNED COPIES OF THIS PLAN SHEET.

TO ACCOMPANY PLANS DATED 06-06-2016

2010 REVISED STANDARD PLAN RSP A88A

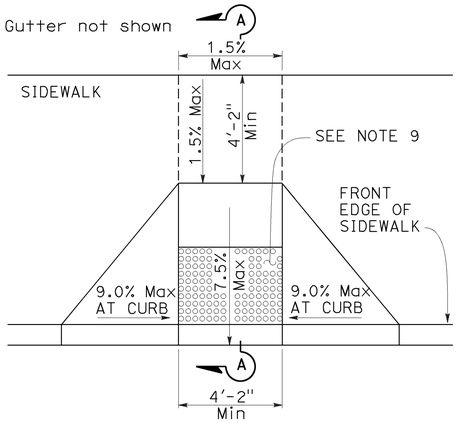

CASE A

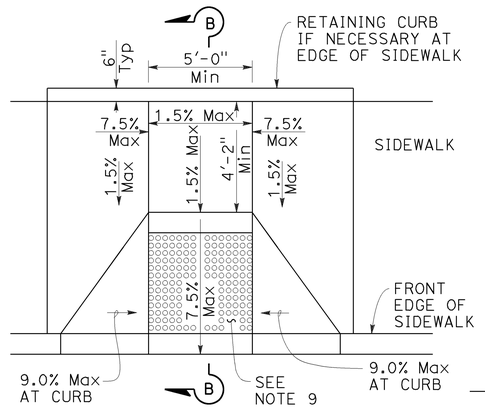

CASE B

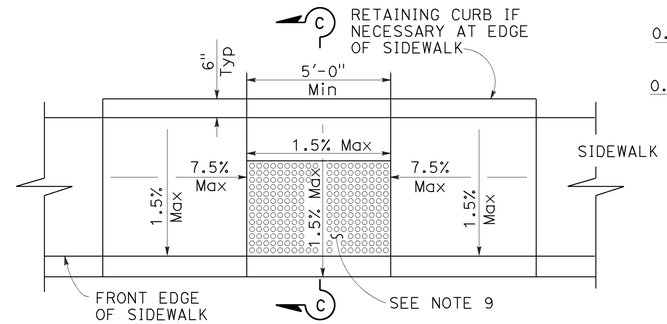

CASE C

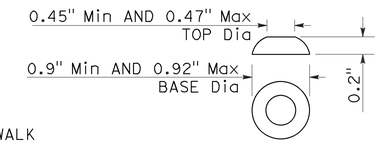

RAISED TRUNCATED DOME

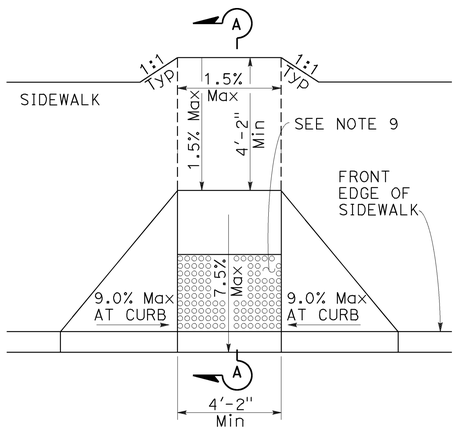

CASE D

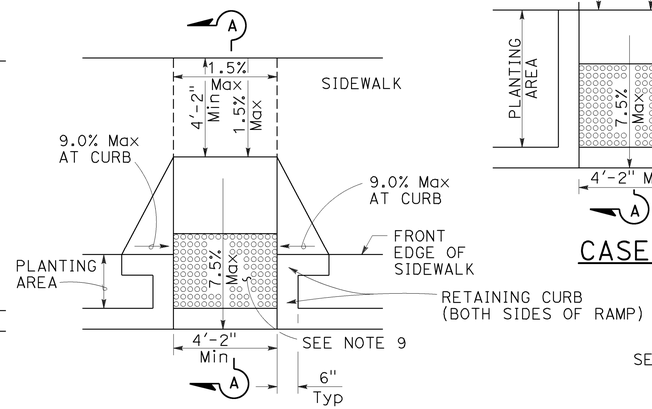

CASE E

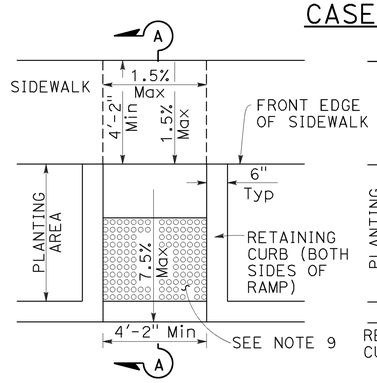

CASE F

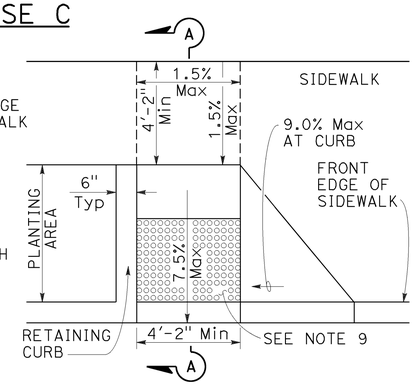

CASE G

See Note 4

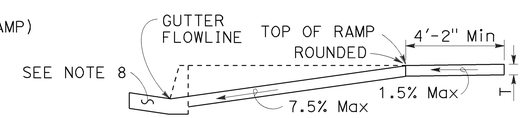

SECTION A-A

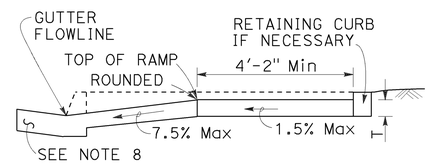

SECTION B-B

Depress entire sidewalk as required

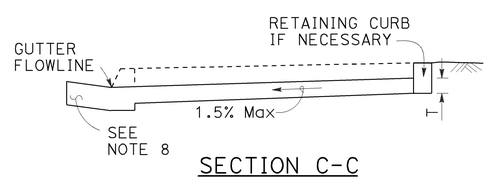

SECTION C-C

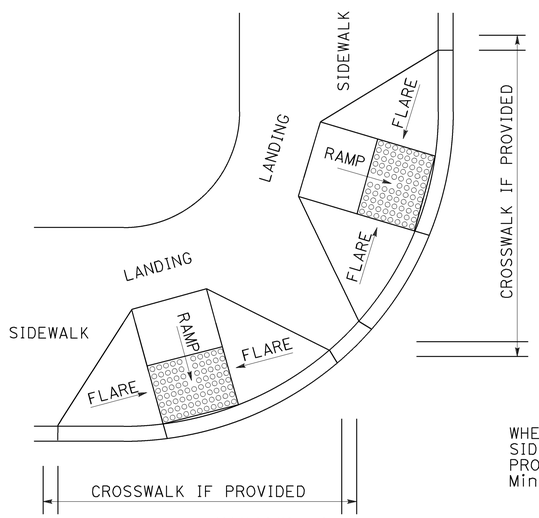

DETAIL A

TYPICAL TWO-RAMP CORNER INSTALLATION

See Note 1

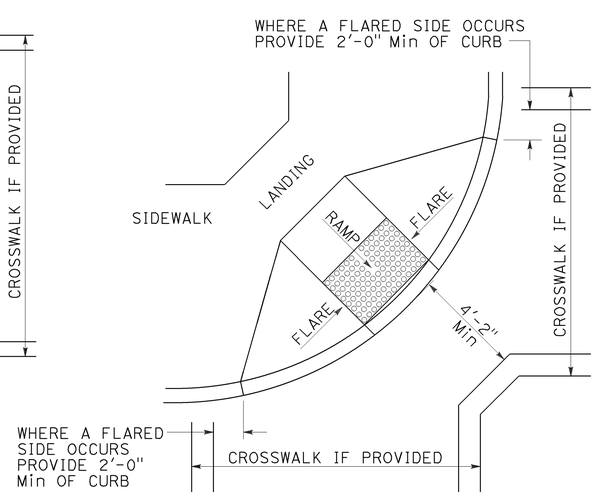

DETAIL B

TYPICAL ONE-RAMP CORNER INSTALLATION

See Notes 1 and 3

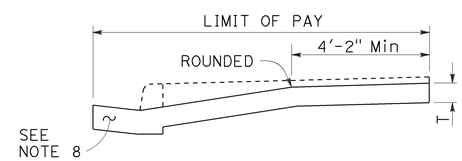

RETROFIT PAY LIMITS

Existing curb and sidewalk

NOTES:

1. As site conditions dictate, Case A through Case G curb ramps may be used for corner installations similar to those shown in Detail A and Detail B. The case of curb ramps used in Detail A do not have to be the same. Case A through Case G curb ramps also may be used at mid block locations, as site conditions dictate.
2. If distance from curb to back of sidewalk is too short to accommodate ramp and 4'-2" platform (landing) as shown in Case A, the sidewalk may be depressed longitudinally as in Case B, or C or may be widened as in Case D.
3. When ramp is located in center of curb return, crosswalk configuration must be similar to that shown for Detail B.
4. As site conditions dictate, the retaining curb side and the flared side of the Case G ramp shall be constructed in reversed position.
5. If located on a curve, the sides of the ramp need not be parallel, but the minimum width of the ramp shall be 4'-2".
6. Side slope of ramp flares vary uniformly from a maximum of 9.0% at curb to conform with longitudinal sidewalk slope adjacent to top of the ramp, except in Case C and Case F.
7. The adjacent surfaces at transitions at curb ramps to walks, gutters, and streets shall be at the same level.
8. Counter slopes of adjoining gutters and road surfaces immediately adjacent to and within 24 inches of the curb ramp shall not be steeper than 1:20 (5.0%). Gutter pan slope shall not exceed 1" of depth for each 2'-0" of width.
9. Curb ramps shall have a detectable warning surface that extends the full width and 3'-0" depth of the ramp. A 4'-0" wide detectable warning surface may be used on a 4'-2" wide curb ramp. Detectable Warning Surfaces shall conform to the requirements in the Standard Specifications.
10. Sidewalk and ramp thickness, "T", shall be 3½" minimum.
11. Utility pull boxes, manholes, vaults and all other utility facilities within the boundaries of the curb ramp will be relocated or adjusted to grade by the owner prior to, or in conjunction with, curb ramp construction.
12. Detectable warning surface may have to be cut to allow removal of utility covers while maintaining full detectable warning width and depth.

RAISED TRUNCATED DOME PATTERN (IN-LINE)

DETECTABLE WARNING SURFACE

See Note 9

STATE OF CALIFORNIA
DEPARTMENT OF TRANSPORTATION

CURB RAMP DETAILS

NO SCALE

RSP A88A DATED JULY 15, 2016 SUPERSEDES RSP A88A DATED JULY 3, 2015, RSP A88A DATED MARCH 21, 2014 AND RSP A88A DATED JULY 19, 2013 AND STANDARD PLAN A88A DATED MAY 20, 2011 - PAGE 121 OF THE STANDARD PLANS BOOK DATED 2010.

REVISED STANDARD PLAN RSP A88A

3-30-16

Dist	COUNTY	ROUTE	POST MILES TOTAL PROJECT	SHEET No.	TOTAL SHEETS
12	Ora	39	9.8/10.5	45	80

William K. Farnbach
REGISTERED CIVIL ENGINEER

July 19, 2013
PLANS APPROVAL DATE

REGISTERED PROFESSIONAL ENGINEER
William K. Farnbach
No. C49042
Exp. 9-30-14
CIVIL
STATE OF CALIFORNIA

THE STATE OF CALIFORNIA OR ITS OFFICERS OR AGENTS SHALL NOT BE RESPONSIBLE FOR THE ACCURACY OR COMPLETENESS OF SCANNED COPIES OF THIS PLAN SHEET.

TO ACCOMPANY PLANS DATED 06-06-2016

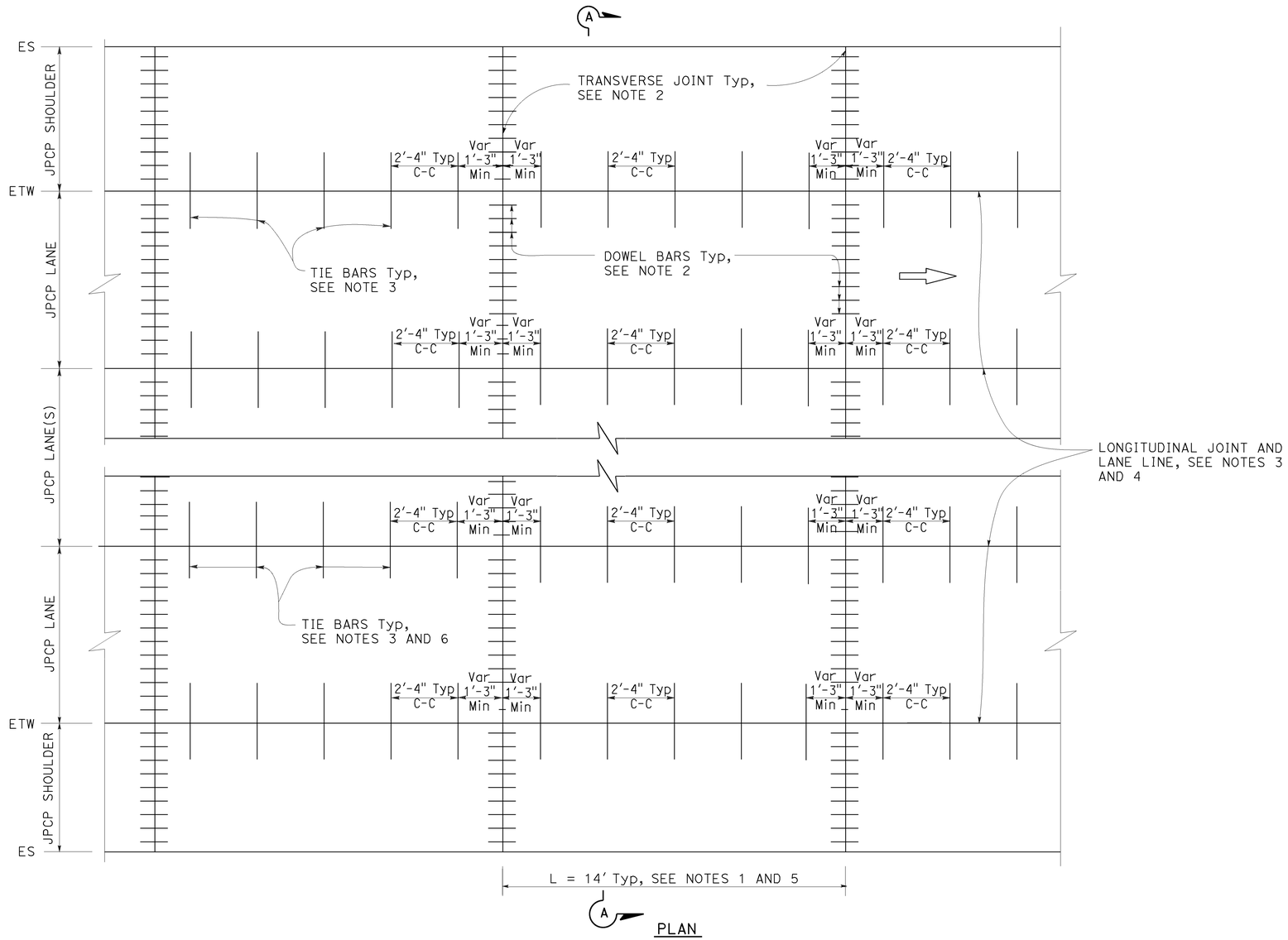

PLAN

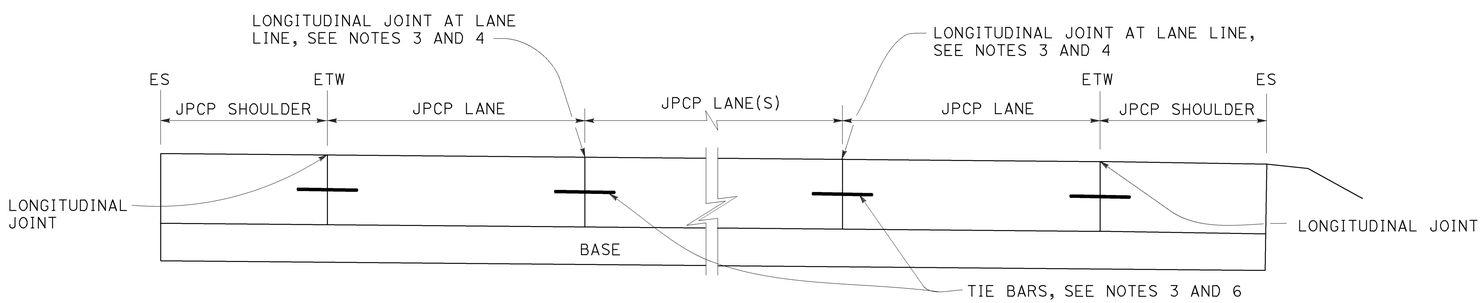

SECTION A-A

NOTES:

1. Transverse joint spacing may be adjusted to no less than 10' and no more than 14' to conform to bridges, change in pavement type, and hardened concrete pavement.
2. For transverse joint and dowel bar details not shown, see Revised Standard Plan RSP P10.
3. For longitudinal joint and tie bar details not shown, see Revised Standard Plan RSP P15.
4. For additional longitudinal joint layout details, see Revised Standard Plan RSP P18.
5. For joint layout at intersections, see Project Plans.
6. For dowel bars at longitudinal joint. see Revised Standard Plan RSP P18.

STATE OF CALIFORNIA
DEPARTMENT OF TRANSPORTATION

JOINTED PLAIN CONCRETE PAVEMENT NEW CONSTRUCTION

NO SCALE

RSP P1 DATED JULY 19, 2013 SUPERSEDES STANDARD PLAN P1
DATED MAY 20, 2011 - PAGE 125 OF THE STANDARD PLANS BOOK DATED 2010.

REVISED STANDARD PLAN RSP P1

2010 REVISED STANDARD PLAN RSP P1

5-31-13

Dist	COUNTY	ROUTE	POST MILES TOTAL PROJECT	SHEET No.	TOTAL SHEETS
12	Ora	39	9.8/10.5	46	80

William K. Farnbach
REGISTERED CIVIL ENGINEER

July 19, 2013
PLANS APPROVAL DATE

REGISTERED PROFESSIONAL ENGINEER William K. Farnbach No. C49042 Exp. 9-30-14 CIVIL STATE OF CALIFORNIA

THE STATE OF CALIFORNIA OR ITS OFFICERS OR AGENTS SHALL NOT BE RESPONSIBLE FOR THE ACCURACY OR COMPLETENESS OF SCANNED COPIES OF THIS PLAN SHEET.

TO ACCOMPANY PLANS DATED 06-06-2016

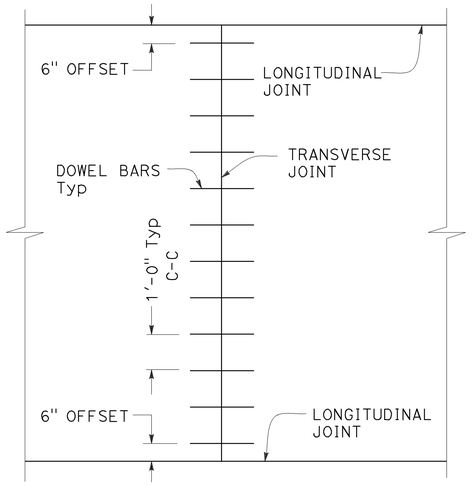

TRANSVERSE JOINT DOWEL BAR LAYOUT

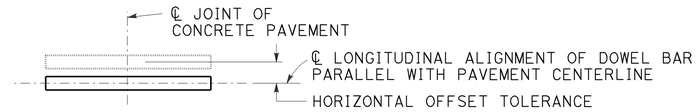

PLAN

HORIZONTAL OFFSET TOLERANCE

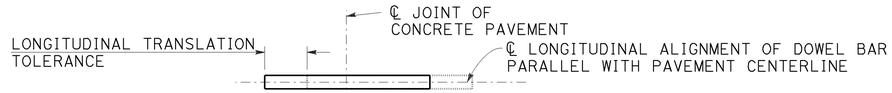

PLAN

LONGITUDINAL TRANSLATION TOLERANCE

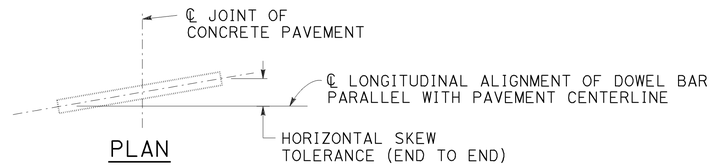

PLAN

HORIZONTAL SKEW TOLERANCE

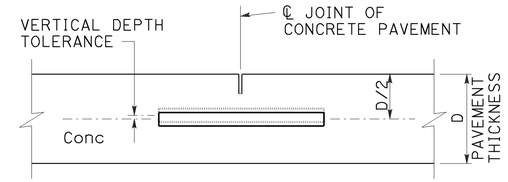

ELEVATION

VERTICAL DEPTH TOLERANCE

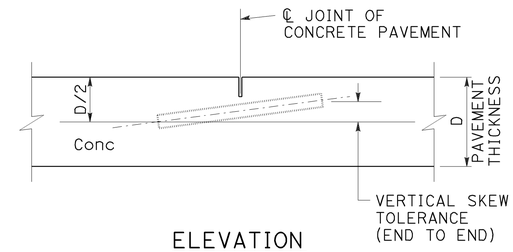

ELEVATION

VERTICAL SKEW TOLERANCE

NOTES:

1. See Revised Standard Plan RSP P1 for typical dowel bar placement and locations.
2. Where fresh concrete pavement is placed against new concrete or existing concrete pavement, rounding the corner of the existing concrete pavement is not required.
3. May also use ¾" Dia dowel bars 2'-4" ± ¼" in length. Center the length of dowel bars at the centerline of longitudinal joint.

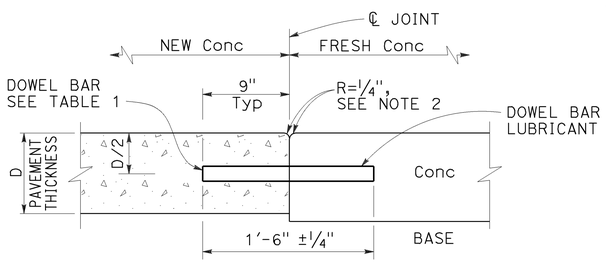

TRANSVERSE CONSTRUCTION JOINT DETAIL

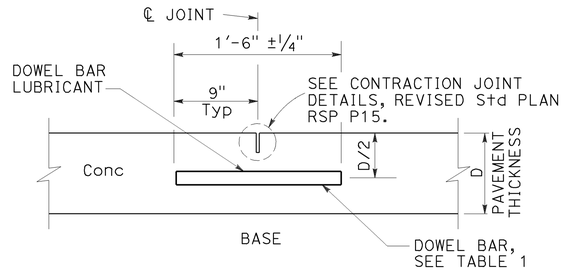

TRANSVERSE CONTRACTION JOINT

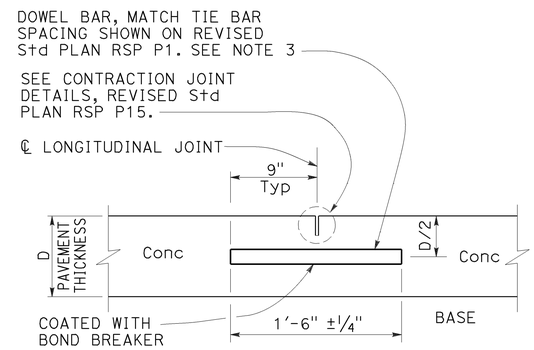

LONGITUDINAL CONTRACTION JOINT WITH DOWEL BARS

See Revised Std Plan RSP P18

TABLE 1

DOWEL BAR DIAMETER TABLE			
PAVEMENT THICKNESS	0.65'	> 0.65' - 0.85'	> 0.85'
MINIMUM DOWEL * BAR DIAMETER	1"	1¼"	1½"

* The drilled hole diameter must be ⅛" to 3/16" larger than the bar diameter.

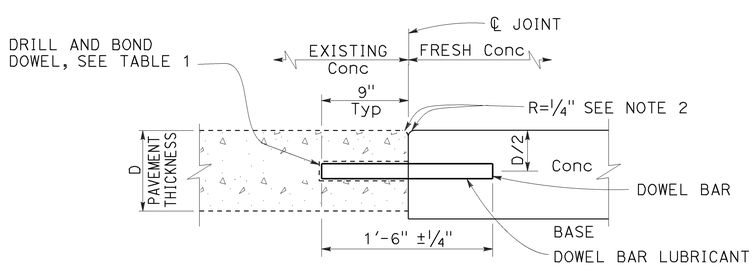

TRANSVERSE CONSTRUCTION JOINT FOR EXISTING CONCRETE PAVEMENT

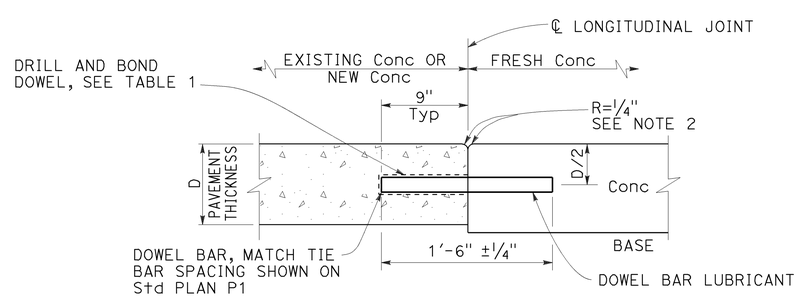

LONGITUDINAL CONSTRUCTION JOINT WITH DOWEL BARS

See Revised Std Plan RSP P18

STATE OF CALIFORNIA
DEPARTMENT OF TRANSPORTATION

CONCRETE PAVEMENT DOWEL BAR DETAILS

NO SCALE

RSP P10 DATED JULY 19, 2013 SUPERSEDES RSP P10 DATED APRIL 20, 2012 AND STANDARD PLAN P10 DATED MAY 20, 2011 - PAGE 131 OF THE STANDARD PLANS BOOK DATED 2010.

REVISED STANDARD PLAN RSP P10

2010 REVISED STANDARD PLAN RSP P10

5-31-13

Dist	COUNTY	ROUTE	POST MILES TOTAL PROJECT	SHEET No.	TOTAL SHEETS
12	Ora	39	9.8/10.5	47	80

REGISTERED CIVIL ENGINEER

July 19, 2013
PLANS APPROVAL DATE

REGISTERED PROFESSIONAL ENGINEER William K. Farnbach No. C49042 Exp. 9-30-14 CIVIL STATE OF CALIFORNIA

THE STATE OF CALIFORNIA OR ITS OFFICERS OR AGENTS SHALL NOT BE RESPONSIBLE FOR THE ACCURACY OR COMPLETENESS OF SCANNED COPIES OF THIS PLAN SHEET.

TO ACCOMPANY PLANS DATED 06-06-2016

2010 REVISED STANDARD PLAN RSP P15

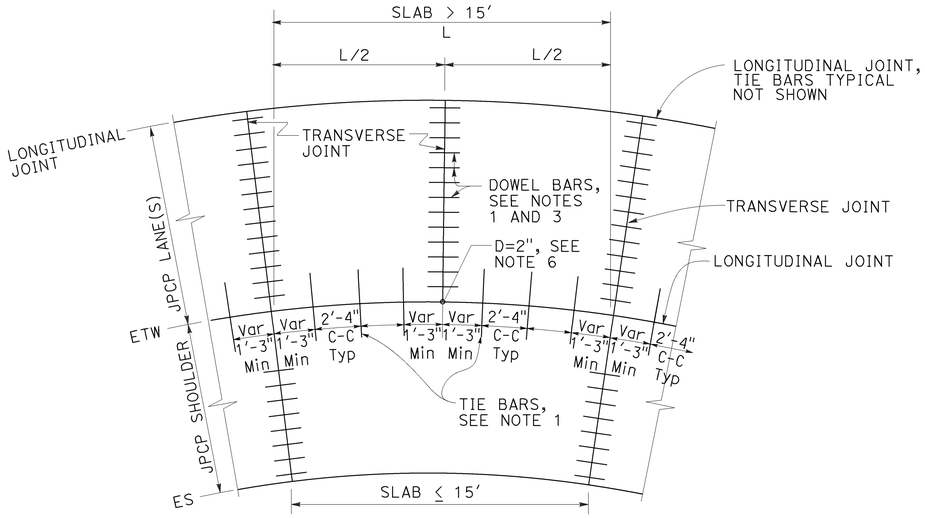

TIE BAR LAYOUT IN CURVED LANES

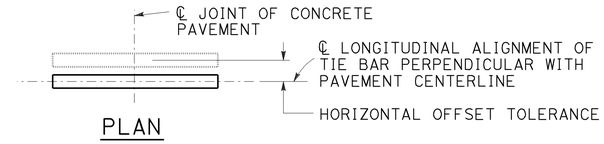

PLAN

HORIZONTAL OFFSET TOLERANCE

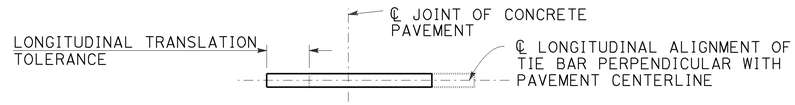

PLAN

LONGITUDINAL TRANSLATION TOLERANCE

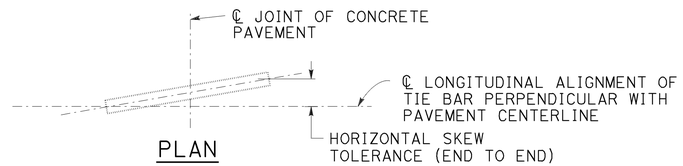

PLAN

HORIZONTAL SKEW TOLERANCE

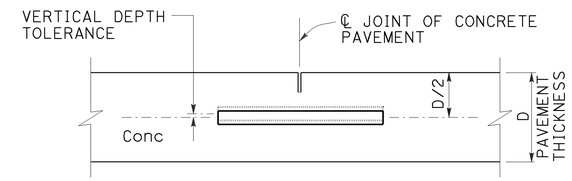

ELEVATION

VERTICAL DEPTH TOLERANCE

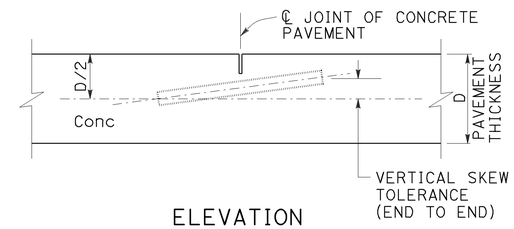

ELEVATION

VERTICAL SKEW TOLERANCE

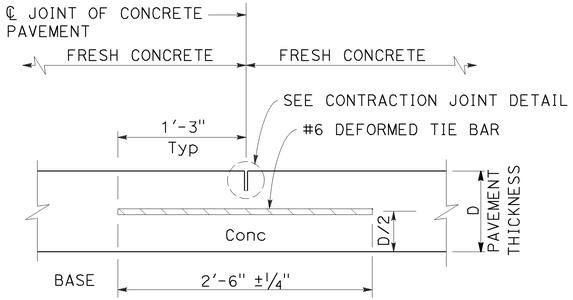

LONGITUDINAL CONTRACTION JOINT

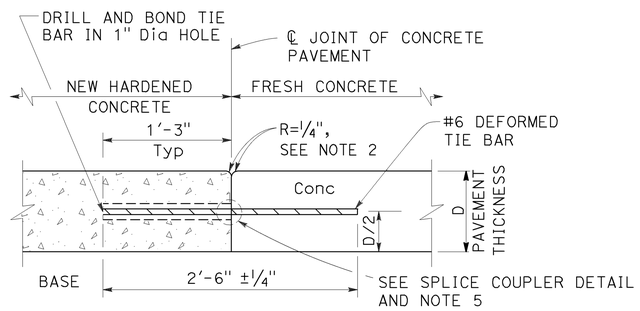

LONGITUDINAL CONSTRUCTION JOINT

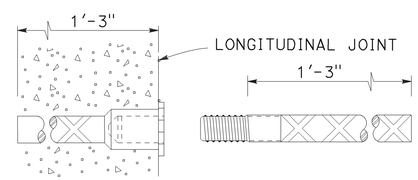

ALTERNATIVE SPLICE COUPLER

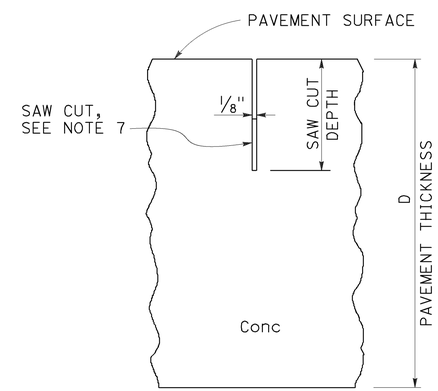

CONTRACTION JOINT DETAIL

NOTES:

1. See Revised Standard Plan RSP P1 for typical dowel bar and tie bar placement and locations.
2. Where new pavement is placed against existing concrete pavement, rounding the corner is not required.
3. For dowel bar sizes, See Revised Standard Plan RSP P10.
4. Tie bar details apply to inside widenings.
5. Use either drill and bond or splice couplers.
6. Full depth drilled hole. Fill hole with filler material.
7. The bottom of the saw cut must be at least 0.5" clear of any dowel bar, tie bar and bar reinforcement.

STATE OF CALIFORNIA
DEPARTMENT OF TRANSPORTATION

CONCRETE PAVEMENT-TIE BAR DETAILS

NO SCALE

RSP P15 DATED JULY 19, 2013 SUPPLEMENTS THE STANDARD PLANS BOOK DATED 2010.

REVISED STANDARD PLAN RSP P15

5-31-13

Dist	COUNTY	ROUTE	POST MILES TOTAL PROJECT	SHEET No.	TOTAL SHEETS
12	Ora	39	9.8/10.5	48	80

William K. Farnbach
REGISTERED CIVIL ENGINEER

July 19, 2013
PLANS APPROVAL DATE

REGISTERED PROFESSIONAL ENGINEER William K. Farnbach No. C49042 Exp. 9-30-14 CIVIL STATE OF CALIFORNIA

THE STATE OF CALIFORNIA OR ITS OFFICERS OR AGENTS SHALL NOT BE RESPONSIBLE FOR THE ACCURACY OR COMPLETENESS OF SCANNED COPIES OF THIS PLAN SHEET.

TO ACCOMPANY PLANS DATED 06-06-2016

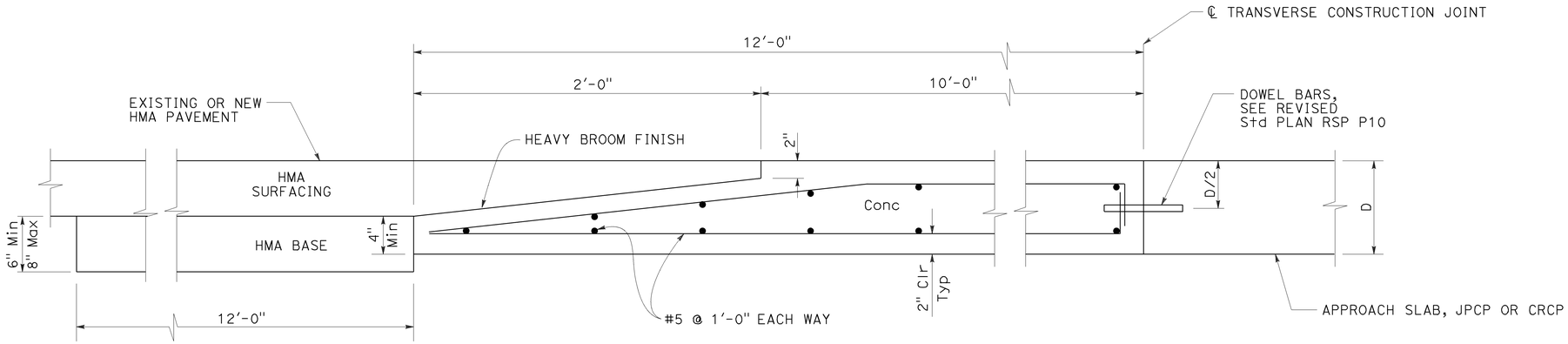

ELEVATION

CONCRETE PAVEMENT TRANSITION PANEL

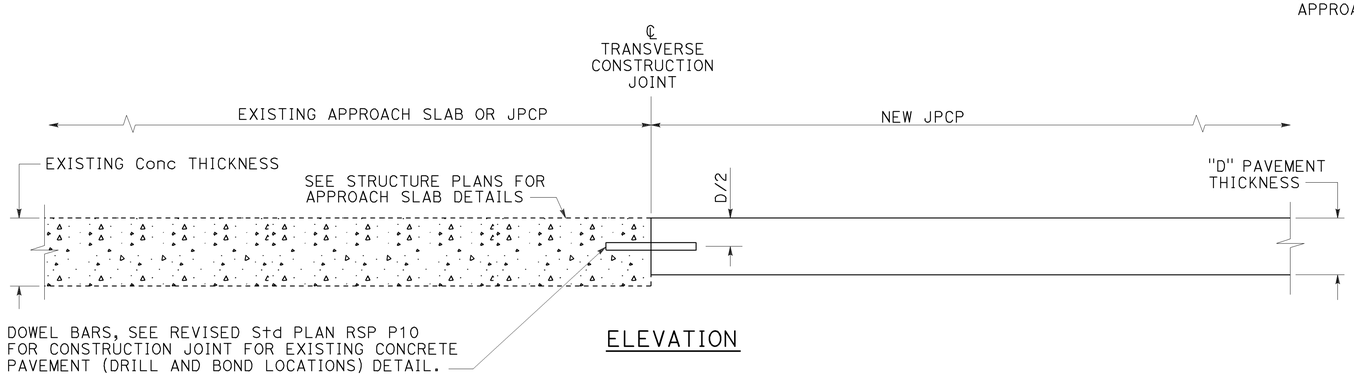

ELEVATION

TERMINAL JOINT TYPE 1

For Exist JPCP or Approach Slab

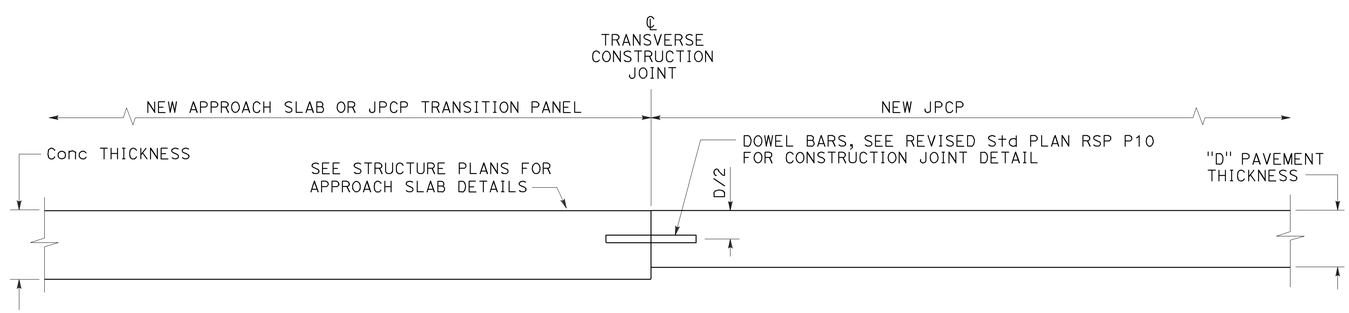

ELEVATION

TERMINAL JOINT TYPE 2

For JPCP Transition Panel or Approach Slab

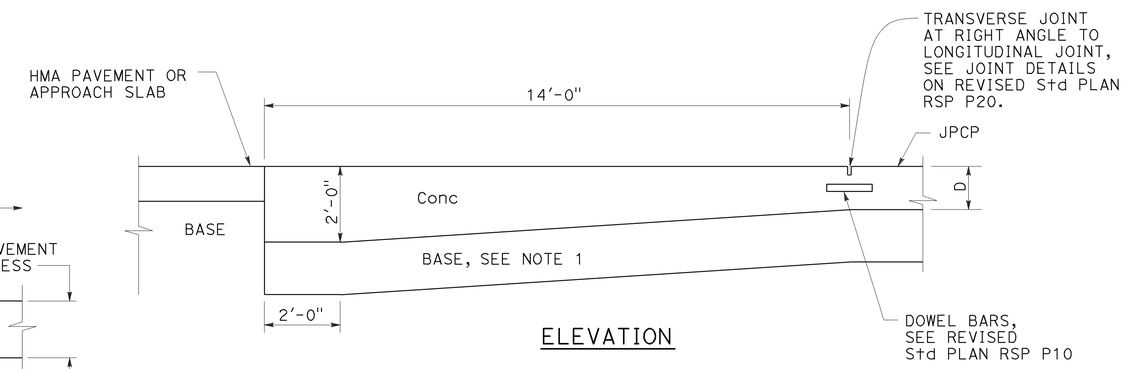

ELEVATION

PAVEMENT END ANCHOR

For HMA Pvmt or Approach Slab

NOTE:

1. Maintain same base thickness as JPCP.

STATE OF CALIFORNIA
DEPARTMENT OF TRANSPORTATION

CONCRETE PAVEMENT-END PANEL PAVEMENT TRANSITIONS

NO SCALE

RSP P30 DATED JULY 19, 2013 SUPERSEDES RSP P30 DATED APRIL 20, 2012 AND STANDARD PLAN P30 DATED MAY 20, 2011 - PAGE 137 OF THE STANDARD PLANS BOOK DATED 2010.

REVISED STANDARD PLAN RSP P30

2010 REVISED STANDARD PLAN RSP P30

3-26-13

Dist	COUNTY	ROUTE	POST MILES TOTAL PROJECT	SHEET No.	TOTAL SHEETS
12	Ora	39	9.8/10.5	49	80

REGISTERED CIVIL ENGINEER

July 15, 2016
PLANS APPROVAL DATE

REGISTERED PROFESSIONAL ENGINEER — Carl M. Duan, No. C59976, Exp. 6-30-18, CIVIL, STATE OF CALIFORNIA

THE STATE OF CALIFORNIA OR ITS OFFICERS OR AGENTS SHALL NOT BE RESPONSIBLE FOR THE ACCURACY OR COMPLETENESS OF SCANNED COPIES OF THIS PLAN SHEET.

TO ACCOMPANY PLANS DATED 06-06-2016

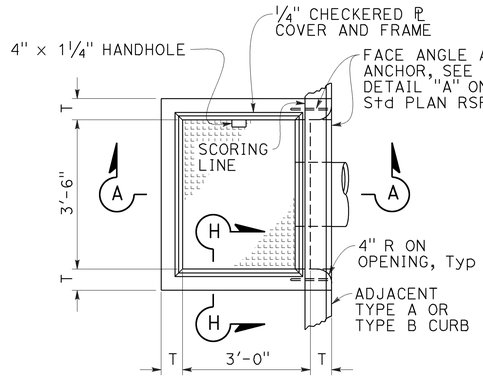

PLAN
TYPE OS

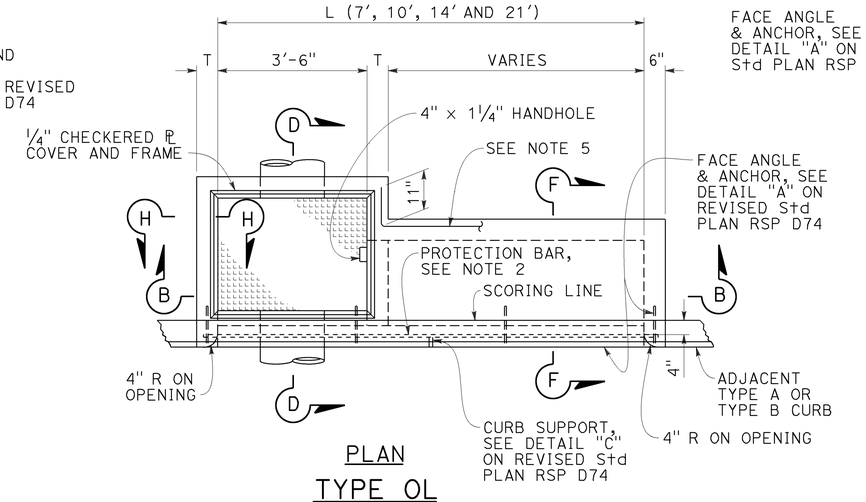

PLAN
TYPE OL

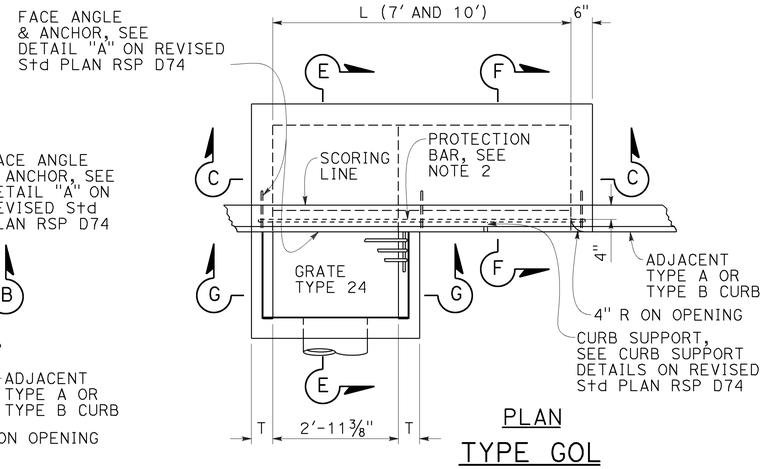

PLAN
TYPE GOL

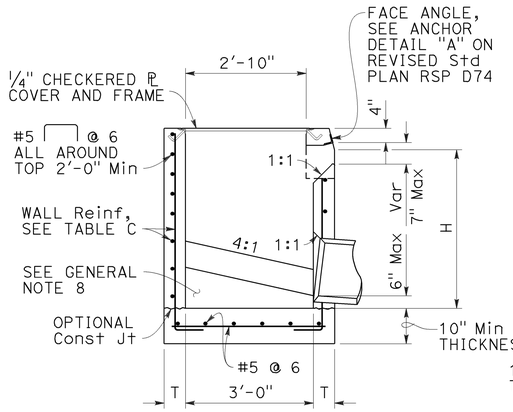

SECTION A-A

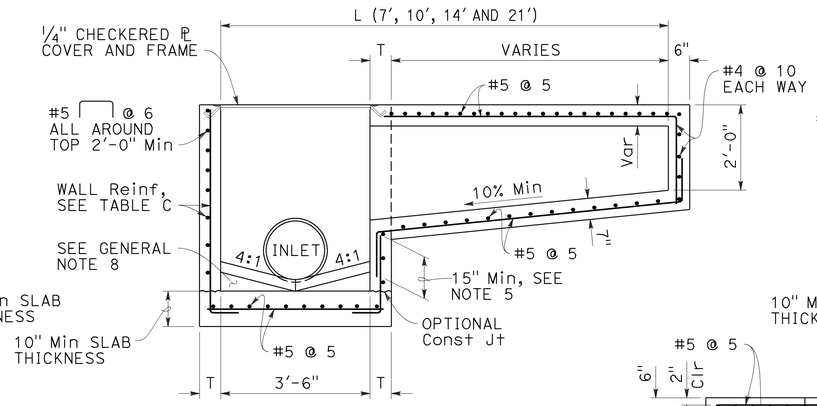

SECTION B-B

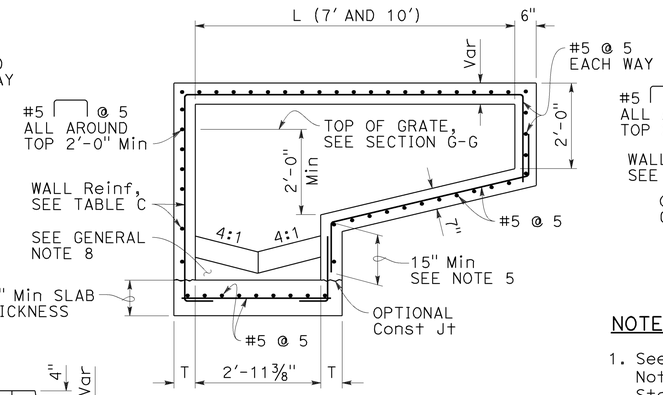

SECTION C-C

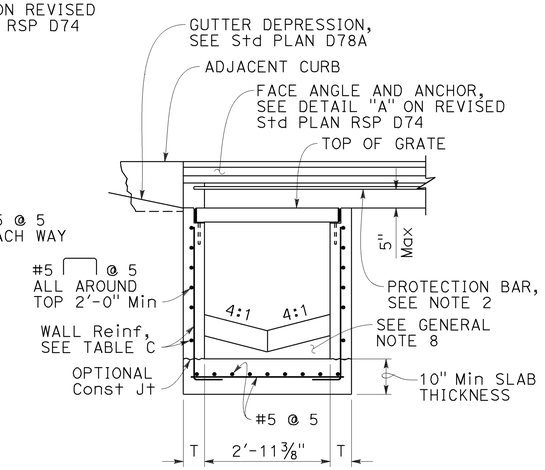

SECTION G-G

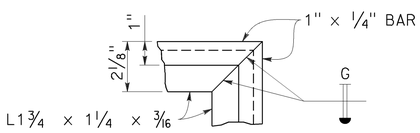

COVER FRAME
TYPICAL EACH CORNER
(CHECKERED ℙ COVER NOT SHOWN)

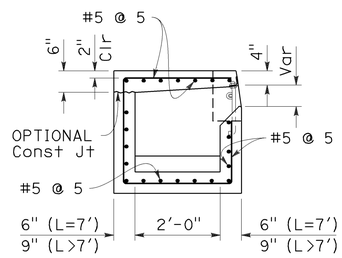

SECTION F-F
(SEE NOTE 5)

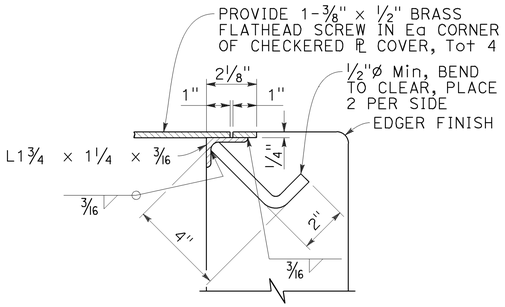

SECTION H-H

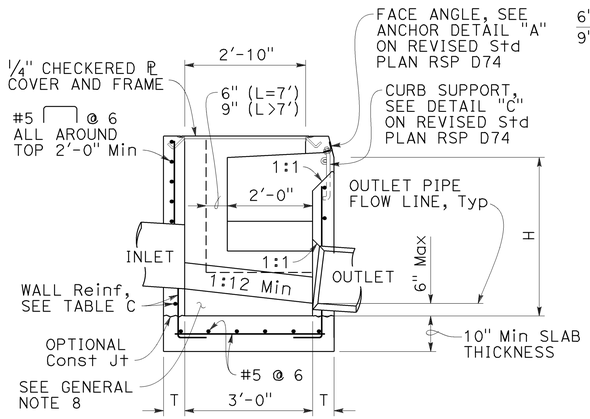

SECTION D-D

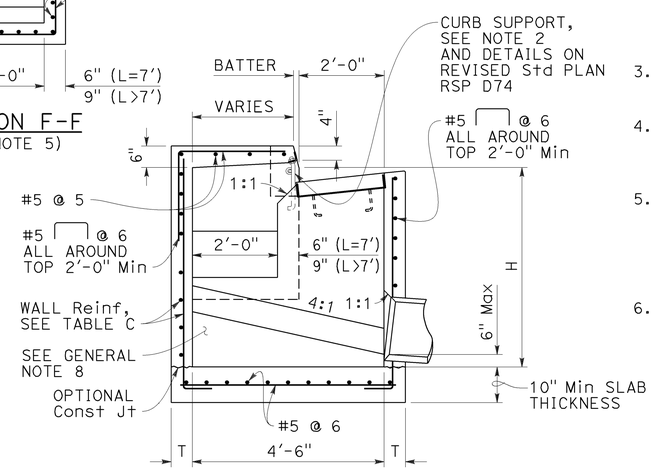

SECTION E-E

NOTES:

1. See Revised Standard Plan RSP D72F for General Notes and additional details. See Revised Standard Plan RSP D72G for tables, wall thickness "T" and quantities.
2. Where shown on the project plans, place a 3/4"Ø plain round protection bar horizontally across the length of the opening and bend back 4" into the inlet wall on each side.
3. Complete joint penetration butt welds may be substituted for the fillet welds on all anchors.
4. Standard square, hexagon, round or equivalent headed anchors may be substituted for the right angle hooks on the anchors shown on this plan.
5. Extend all horizontal bars from inlet extensions into adjacent concrete elements of main inlet box a minimum of 15". Where shown, bend horizontal bars into box. If necessary rotate bars to maintain 2" clear coverage.
6. Height of curb opening will vary with the type of curb and the depth of the local depression.

STATE OF CALIFORNIA
DEPARTMENT OF TRANSPORTATION

CIP DRAINAGE INLETS TYPES OS, OL AND GOL

NO SCALE

RSP D72A DATED JULY 15, 2016 SUPPLEMENTS THE STANDARD PLANS BOOK DATED 2010.

REVISED STANDARD PLAN RSP D72A

2010 REVISED STANDARD PLAN RSP D72A

6-28-16

Dist	COUNTY	ROUTE	POST MILES TOTAL PROJECT	SHEET No.	TOTAL SHEETS
12	Ora	39	9.8/10.5	50	80

REGISTERED CIVIL ENGINEER

July 15, 2016
PLANS APPROVAL DATE

REGISTERED PROFESSIONAL ENGINEER
Carl M. Duan
No. C59976
Exp. 6-30-18
CIVIL
STATE OF CALIFORNIA

THE STATE OF CALIFORNIA OR ITS OFFICERS OR AGENTS SHALL NOT BE RESPONSIBLE FOR THE ACCURACY OR COMPLETENESS OF SCANNED COPIES OF THIS PLAN SHEET.

TO ACCOMPANY PLANS DATED 06-06-2016

GENERAL NOTES:

1. "H" is measured from top of bottom slab to the normal gutter grade line undepressed at the curb face.
2. For "T" wall thickness and reinforcement, see Table C on Revised Standard Plan RSP D72G.
3. Wall reinforcement must be placed in the center of the wall thickness with horizontal bars placed on the exterior face. Bottom slab concrete cover must be 3" clear on the interior face unless otherwise noted. Top slab concrete cover must be 2" clear on the exterior face unless otherwise noted. Reinforcement spacing is in inches unless otherwise noted.
4. Steps - None required where "H" is less than 2'-6". Where "H" is 2'-6" or more, install steps with lowest rung 1'-0" above the floor and highest rung not more than 6" below bottom of lid. The distance between steps must not exceed 1'-0" and be uniform throughout the length of the wall. Place steps in the wall without an opening. Steps inserts may be substituted for the bar steps. Step inserts must comply with State Industrial Safety Requirements. See Revised Standard Plan RSP D74 for step details.
5. Pipe(s) can be placed in any wall. Adjacent to each side of the opening, place additional reinforcement equivalent to half the interupted main reinforcement. For larger pipes greater than or equal to 42" diameter, also add 4 diagonal bars, 1 bar each side. Bars must be the same size as the larger of the main vertical or horizontal bars. Extend bars one development length past the intersection with the adjacent diagonal bar, or where bars intersect mid thickness of adjacent wall bottom or top of non-continuous wall, bend ends as required into same plane.
6. Set inlet so that grate bars are parallel to direction of principal surface flow.
7. Curb section must match adjacent curb.
8. Except for inlets used as junction boxes, basin floors must have wood trowel finish and a minimum slope of 4:1, unless otherwise noted, from all directions toward outlet pipe by casting grout fill on top of the bottom slab. The additional volume to achieve the 4:1 slope may also be achieved by casting the bottom slab and fill as a composite concrete element.
9. See Revised Standard Plans RSP D77A and RSP D77B for grate and frame details and weights of miscellaneous iron and steel.
10. See Standard Plans D78A and D78B for gutter depression details.
11. See Revised Standard Plans RSP A87A and RSP A87B for curb and dike details.
12. Details shown apply to metal, concrete and plastic pipe(s).
13. The Contractor may use WWR instead of bar reinforcement. The ratio of bar reinforcement to WWR shall be based on the yield strength ratio.
14. Cast-in-place (CIP) inlets to be formed around all pipes/stubs intersecting the inlet, and concrete poured in one continuous operation.
15. Perimeter reinforcement must not be smaller than main bars and #4 and serves as a rigid frame to position and attach the required structural reinforcement and may be tack welded at outer corners when using ASTM A706 weldable bars.

DESIGN NOTES:

1. Design Specifications: AASHTO LRFD Bridge Design Specifications, 6th edition with 2012 Interims and Errata and CA Amendments.
2. Live Load (AASHTO LRFD 3.6.1.2):
   HL-93, consists of design truck or tandem, and design lane load.
   Dynamic Load Allowance, IM = 33%
   Multiple Presence Factor, m = 1.0
   Design lane load was excluded in Top Slab design.
   A wheel load of 8 kips without impact factor was used for top slabs that are above a curb.
3. Earth Load:
   Vertical pressure = 140 pcf
   Lateral pressure:
   = 100 pcf for walls with flat embankment
   = 140 pcf For walls with slope embankment, 1.5:1 Max
4. Downdrag: ϕ = 34° and γ_E = 120 pcf.
5. Buoyancy: γ_W = 62.4 pcf to finished grade
6. Reinforced Concrete: f'c = 3.6 ksi, fy = 60.0 ksi.
7. Soil pressures shown are factored per AASHTO LRFD and include self-weight, live load and downdrag.

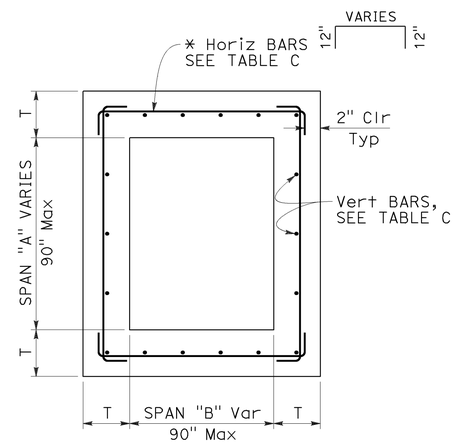

TYPICAL INLET PLAN

* ALTERNATIVE HORIZONTAL BARS

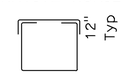

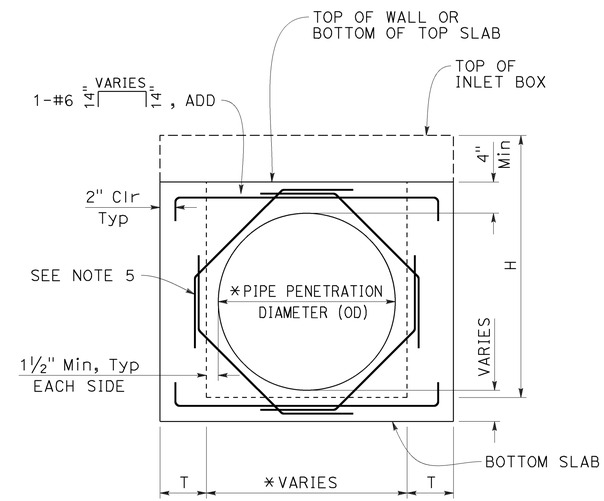

TYPICAL WALL
W/ PIPE OPENING

* SEE "SKEWED PIPE PLAN"

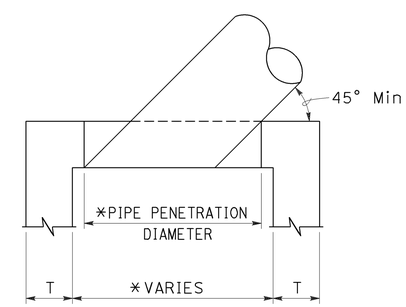

SKEWED PIPE PLAN

* ADJUST PIPE PENETRATION AND BOX WIDTH FOR SKEWED PIPES.

STATE OF CALIFORNIA
DEPARTMENT OF TRANSPORTATION

CIP DRAINAGE INLET NOTES

NO SCALE

RSP D72F DATED JULY 15, 2016 SUPPLEMENTS THE STANDARD PLANS BOOK DATED 2010.

REVISED STANDARD PLAN RSP D72F

2010 REVISED STANDARD PLAN RSP D72F

6-20-16

Dist	COUNTY	ROUTE	POST MILES TOTAL PROJECT	SHEET No.	TOTAL SHEETS
12	Ora	39	9.8/10.5	51	80

REGISTERED CIVIL ENGINEER

July 15, 2016
PLANS APPROVAL DATE

REGISTERED PROFESSIONAL ENGINEER
Carl M. Duan
No. C59976
Exp. 6-30-18
CIVIL
STATE OF CALIFORNIA

THE STATE OF CALIFORNIA OR ITS OFFICERS OR AGENTS SHALL NOT BE RESPONSIBLE FOR THE ACCURACY OR COMPLETENESS OF SCANNED COPIES OF THIS PLAN SHEET.

TO ACCOMPANY PLANS DATED 06-06-2016

2010 REVISED STANDARD PLAN RSP D72G

TABLE A - CONCRETE QUANTITIES

TYPE	H=3'-0" TO 8'-0"		H=8'-1" TO 20'-0"	
	H=3'-0" (CY)	ADDITIONAL CONCRETE PER FOOT (CY)	H=8'-1" (CY)	ADDITIONAL CONCRETE PER FOOT (CY)
G1	0.95	0.220	SEE NOTE 2	SEE NOTE 2
G2*	2.00	0.411	5.11	0.525
G3	1.03	0.220	SEE NOTE 2	SEE NOTE 2
G4 (TYPE 18)*	2.02	0.411	5.14	0.525
G4 (TYPE 24)*	1.99	0.411	5.10	0.525
G5	1.02	0.220	SEE NOTE 2	SEE NOTE 2
G6	1.04	0.220	SEE NOTE 2	SEE NOTE 2
OS	1.53	0.278	5.08	0.504
OL7	2.06	0.278	6.17	0.566
OL10	2.85	0.278	6.85	0.566
OL14	3.81	0.278	7.78	0.566
OL21	5.71	0.278	9.62	0.566
GOL7	2.48	0.313	6.89	0.630
GOL10	3.41	0.313	7.85	0.630
GT1	1.72	0.248	SEE NOTE 2	SEE NOTE 2
GT2	2.93	0.530	7.73	0.762
GT3	1.74	0.348	SEE NOTE 2	SEE NOTE 2
GT4	2.83	0.530	7.62	0.762
GO	1.26	0.245	4.90	0.506
GDO	1.74	0.322	6.33	0.647

* Quantities are based on the minimum interior dimensions.

TABLE B - REINFORCEMENT QUANTITIES

TYPE	H=3'-0" TO 8'-0"		H=8'-1" TO 20'-0"	
	H=3'-0" (LB)	ADDITIONAL REINFORCEMENT PER FOOT (LB)	H=8'-1" (LB)	ADDITIONAL REINFORCEMENT PER FOOT (LB)
G1	118	22.20	SEE NOTE 2	SEE NOTE 2
G2*	729	86.48	1794	171.79
G3	118	22.20	SEE NOTE 2	SEE NOTE 2
G4 (TYPE 18)*	647	86.48	1675	171.79
G4 (TYPE 24)*	647	86.48	1675	171.79
G5	118	22.20	SEE NOTE 2	SEE NOTE 2
G6	118	22.20	SEE NOTE 2	SEE NOTE 2
OS	245	49.88	1057	120.77
OL7	458	50.53	1324	126.75
OL10	729	50.53	1595	126.75
OL14	982	50.53	1849	126.75
OL21	1453	50.53	2320	126.75
GOL7	644	83.57	1969	148.79
GOL10	883	83.57	2208	148.79
GT1	486	96.91	SEE NOTE 2	SEE NOTE 2
GT2	1040	117.08	2543	233.37
GT3	486	96.91	SEE NOTE 2	SEE NOTE 2
GT4	1001	117.08	2556	237.88
GO	308	32.44	1013	96.56
GDO	519	57.09	1654	165.66

* Quantities are based on the minimum interior dimensions.

TABLE D

INLET	CURB USED IN QUANTITIES
G1	-
G2	-
G3	A1-6
G4 (Type 18)	A1-6
G4 (Type 24)	A1-6
G5	B1-4
G6	½E
OS	-
OL7	-
OL10	-
OL14	-
OL21	-
GOL7	-
GOL10	-
GT1	D-6
GT2	E
GT3	A2-8
GT4	A2-8
GO	-
GDO	-

TABLE C - WALL REINFORCEMENT

TYPE	H≤8 (T=6",UON)		8<H≤20 (T=11",UON)	
	HORIZ	VERTICAL	HORIZ	VERTICAL
OS	#4 @ 8	#4 @ 6	#5 @ 6	#6 @ 4.5
OL	#4 @ 6	#4 @ 6	#5 @ 6	#6 @ 4.5
GOL	#5 @ 6	#5 @ 8	#6 @ 5	#6 @ 4.5
G1 (H≤6-6")	#3 @ 6	#3 @ 6	-	-
G2	T=9" #5 @ 5	#5 @ 5	T=11" #6 @ 4	#6 @ 4.5
G3 (H≤6-6")	#3 @ 6	#3 @ 6	-	-
G4	T=9" #5 @ 5	#5 @ 5	T=11" #6 @ 4	#6 @ 4.5
G5 (H≤6-6")	#3 @ 6	#3 @ 6	-	-
G6 (H≤6-6")	#3 @ 6	#3 @ 6	-	-
GT1 (H≤6-6")	#5 @ 6	#5 @ 6	-	-
GT2	T=8" #5 @ 6	#5 @ 6	#6 @ 4	#6 @ 4.5
GT3 (H≤6-6")	#5 @ 6	#5 @ 6	-	-
GT4	T=8" #5 @ 6	#5 @ 6	#6 @ 4	#6 @ 4.5
GO	#4 @ 9	#4 @ 6	#4 @ 6	#6 @ 4.5
GDO	#4 @ 6	#4 @ 6	#5 @ 4	#6 @ 4.5

TABLE E

SOIL PRESSURE BELOW BASE SLAB (ksf)		
TYPE	H=8'-0"	8'-0"< H ≤20'-0"
OS	2.93	5.56
OL*	2.93	5.56
GOL*	2.50	5.06
G1	3.67	-
G2	2.99	5.91
G3	3.67	-
G4	2.99	5.91
G5	3.67	-
G6	3.67	-
GT1	3.66	-
GT2	3.91	6.07
GT3	3.86	-
GT4	3.91	6.07
GO	3.42	6.11
GDO	2.52	6.95

* Main Box

NOTES:

1. No deduction or adjustment was made to the quantities of concrete and reinforcement for pipe openings, floor alternatives or curb type.
2. Maximum allowable height is 6'-6".
3. Quantities are approximate and for design purposes only.
4. Design is based on envelope of level and sloped ground.

STATE OF CALIFORNIA
DEPARTMENT OF TRANSPORTATION

CIP DRAINAGE INLET TABLES

NO SCALE

RSP D72G DATED JULY 15, 2016 SUPPLEMENTS THE STANDARD PLANS BOOK DATED 2010.

REVISED STANDARD PLAN RSP D72G

6-20-16

Dist	COUNTY	ROUTE	POST MILES TOTAL PROJECT	SHEET No.	TOTAL SHEETS
12	Ora	39	9.8/10.5	52	80

REGISTERED CIVIL ENGINEER

July 15, 2016
PLANS APPROVAL DATE

REGISTERED PROFESSIONAL ENGINEER
Carl M. Duan
No. C59976
Exp. 6-30-18
CIVIL
STATE OF CALIFORNIA

THE STATE OF CALIFORNIA OR ITS OFFICERS OR AGENTS SHALL NOT BE RESPONSIBLE FOR THE ACCURACY OR COMPLETENESS OF SCANNED COPIES OF THIS PLAN SHEET.

TO ACCOMPANY PLANS DATED 06-06-2016

2010 REVISED STANDARD PLAN RSP D74

FACE ANGLE DETAIL "A"	
LENGTH OF CURB OPENING	No. OF ANCHORS
3'-6" OR LESS	2
7'-0"	3
10'-0"	4
14'-0"	5
21'-0"	7

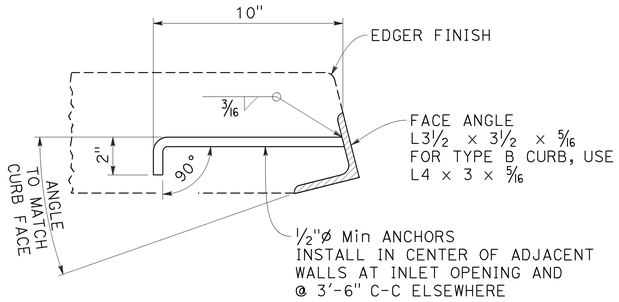

DETAIL "A"

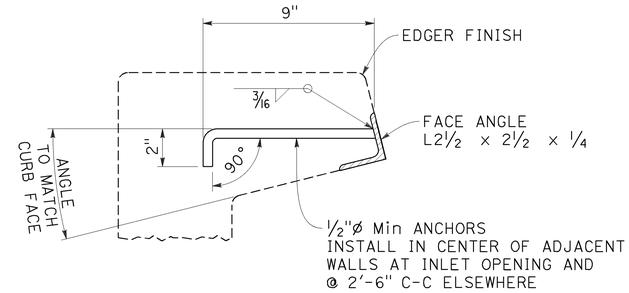

DETAIL "B"

FACE ANGLE AND ANCHOR

NOTE:

1. When shown on the project plans, place a ¾"ø plain round protection bar horizontally across the length of the opening and bend back 4" into the inlet wall on each side.

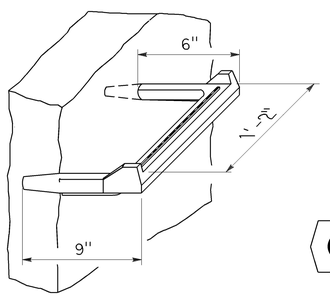

STEP INSERT

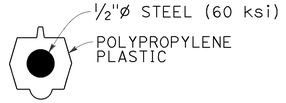

TYPICAL SECTION
(STEP INSERT)

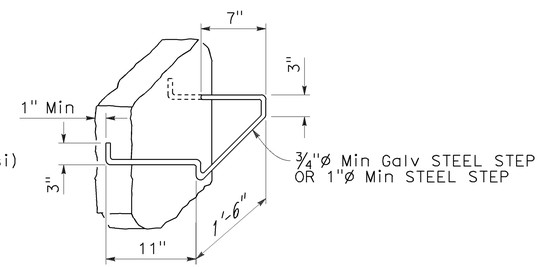

BAR STEP

STEP DETAILS

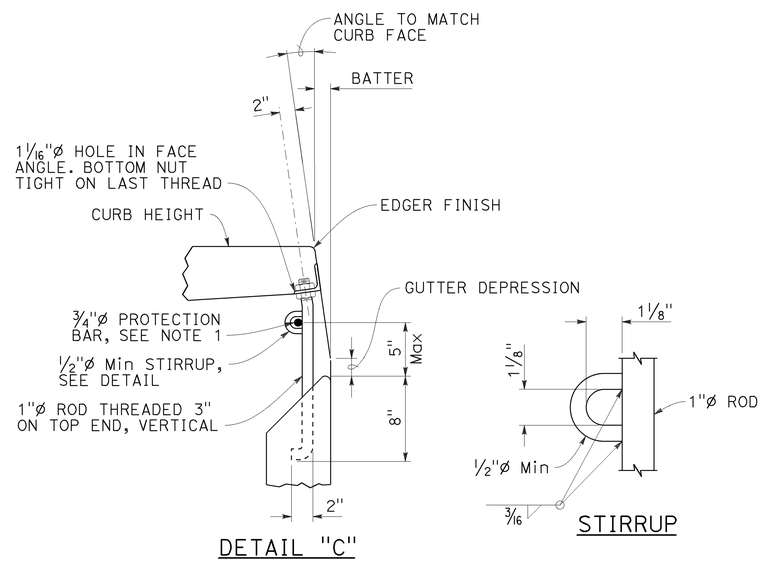

DETAIL "C"

STIRRUP

CURB SUPPORT

CURB SUPPORTS SHALL BE EVENLY SPACED AND MINIMAL IN NUMBER SUCH THAT MAXIMUM SPAN OF UNSUPPORTED CURB IS 7'-0".

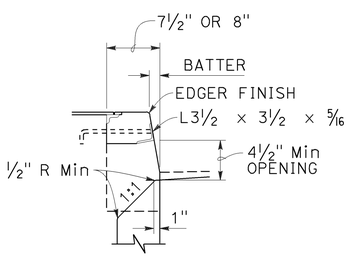

TYPE A CURBS

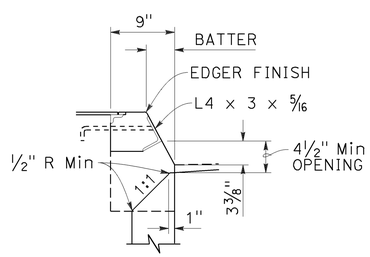

TYPE B CURBS

CURB OPENING DETAILS

STATE OF CALIFORNIA
DEPARTMENT OF TRANSPORTATION

DRAINAGE INLET DETAILS

NO SCALE

RSP D74 DATED JULY 15, 2016 SUPPLEMENTS THE STANDARD PLANS BOOK DATED 2010.

REVISED STANDARD PLAN RSP D74

6-20-16

Dist	COUNTY	ROUTE	POST MILES TOTAL PROJECT	SHEET No.	TOTAL SHEETS
12	Ora	39	9.8/10.5	53	80

Raymond Don Tsztoo
REGISTERED CIVIL ENGINEER

April 19, 2013
PLANS APPROVAL DATE

REGISTERED PROFESSIONAL ENGINEER Raymond Don Tsztoo No. C37332 Exp. 6-30-14 CIVIL STATE OF CALIFORNIA

THE STATE OF CALIFORNIA OR ITS OFFICERS OR AGENTS SHALL NOT BE RESPONSIBLE FOR THE ACCURACY OR COMPLETENESS OF SCANNED COPIES OF THIS PLAN SHEET.

TO ACCOMPANY PLANS DATED 06-06-2016

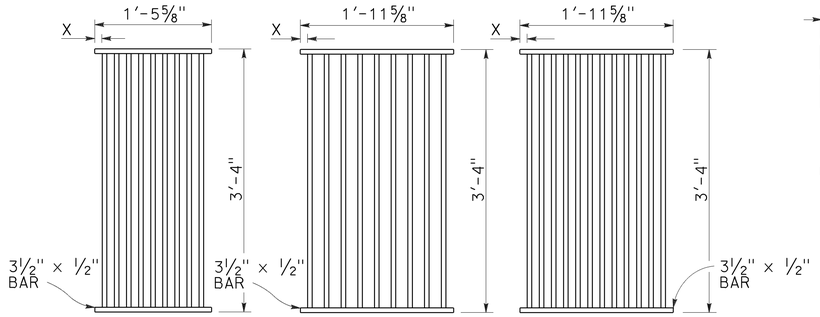

TYPE 18-9

1⅜" Clear spacing. Use within the roadbed on highways where bicycles and pedestrians are excluded.

TYPE 24-9

2" Clear spacing. Use in locations off the roadbed on all types of highways.

TYPE 24-12

1⅜" Clear spacing. Use within the roadbed on highways where bicycles and pedestrians are excluded.

RECTANGULAR GRATE DETAILS

(See table below)

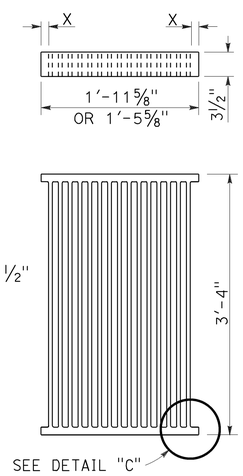

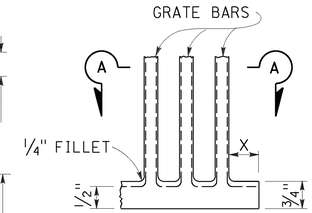

DETAIL "C"

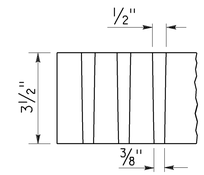

SECTION A-A

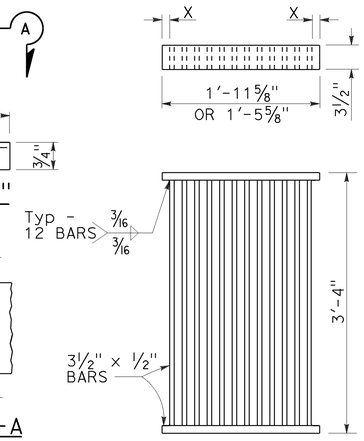

ALTERNATIVE CAST DUCTILE IRON GRATE OR CAST CARBON STEEL GRATE

ALTERNATIVE WELDED GRATE

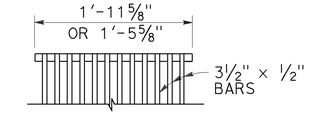

CAST END BLOCK

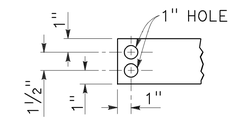

END OF BAR

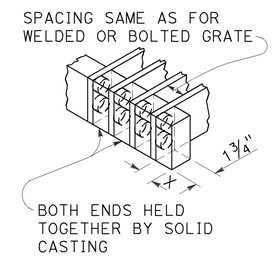

ALTERNATIVE CAST DUCTILE IRON OR CAST CARBON STEEL END BLOCK GRATE

NOTES:

1. Grate type numbers refer to approximate width of grate in inches and number of bars, respectively.
2. Contractor has the option of using cast ductile iron, cast carbon steel, welded, bolted, or cast end block grate.
3. Rounded top of bars optional on all grates.
4. Pipe inlets with a grate shall be placed so that bars parallel direction of principle surface flow.
5. Complete joint penetration butt welds may be substituted for the fillet welds on all anchors.
6. Standard square, hexagon, round or equivalent headed anchors may be substituted for the right angle hooks on the anchors shown on this plan.
7. Grate and frame weights are based on welded grates (weights of face angles, steps, protection bars, etc. are not included).
8. Connect chain to grate and frame only at locations shown on the plans. When chain is required, do not use cast ductile iron grates.

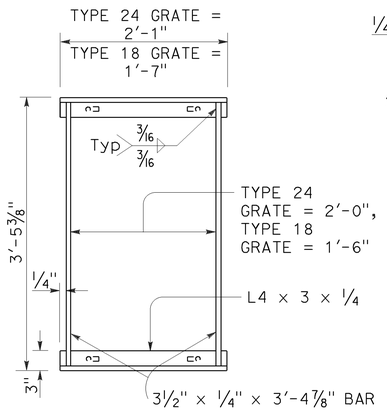

TYPICAL FRAME

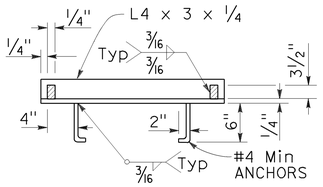

CROSS SECTION

(Thru frame)

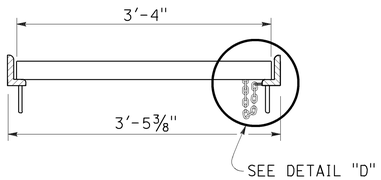

LONGITUDINAL SECTION

(Thru frame and grate)

RECTANGULAR FRAME DETAILS

(For all rectangular grates)

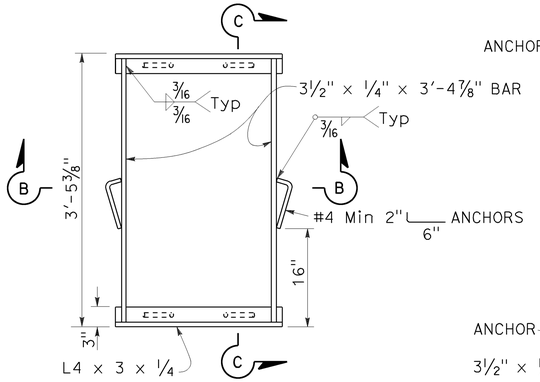

TYPICAL FRAME

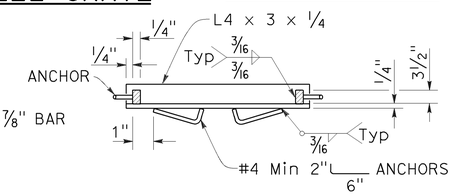

SECTION B-B

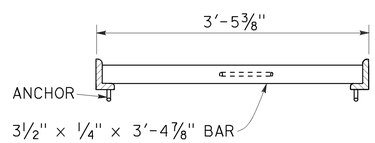

SECTION C-C

ALTERNATIVE ANCHOR FOR RECTANGULAR FRAME

(For details not shown, See Rectangular Frame Details)

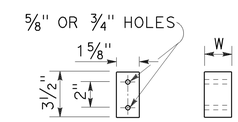

BAR SPACER

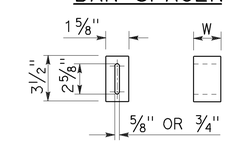

ALTERNATIVE SPACER

W = 1⅜" or 2"

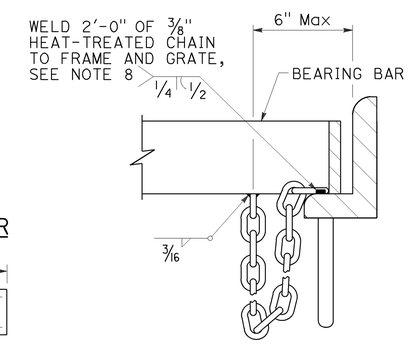

DETAIL "D"

(Steel grates only)

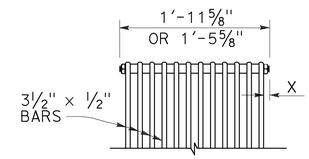

BOLTED END BLOCK

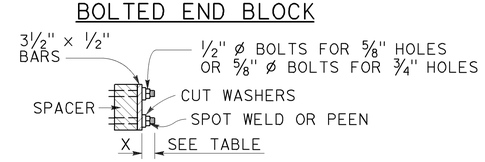

BOLTING DETAIL

ALTERNATIVE BOLTED GRATE

GRATE BAR SPACING TABLE

TYPE	No. OF BARS	CLEAR BAR SPACING	X
18-9	9	1⅜"	1 1/16"
24-9	9	2"	1 9/16"
24-12	12	1⅜"	1¼"

INLET TYPE	COVER TYPE	WEIGHT LB
OS	PLATE	174
OL-7	PLATE	170
OL-10	PLATE	170
OL-14	PLATE	170
OL-21	PLATE	170
OCP	PLATE	112
OCPI	PLATE	112
OCPI	REDWOOD	42
OMP	PLATE	177
OMPI	PLATE	177

INLET TYPE	GRATE TYPE	No. OF GRATES	WEIGHT LB
GDO	24-12	2	634
GOL-7	24-12	1	326
GOL-10	24-12	1	326
GO,G1,G2,G3,G4 (TYPE 24)	24-9	1	263
	24-12	1	326
G4 (TYPE 18),G5,G6	18-9	1	249
GT1	18-9	2	498
GT2	18-9	2	498
GT3	24-12	2	652
GT4	24-12	2	652
TRASH RACK			22
GRATE CHAIN			3

BASIS FOR Misc IRON & STEEL FINAL PAY WEIGHTS FOR DRAINAGE INLETS

(See Note 7)

STATE OF CALIFORNIA
DEPARTMENT OF TRANSPORTATION

GRATE DETAILS No. 1

NO SCALE

RSP D77A DATED APRIL 19, 2013 SUPERSEDES RSP D77A DATED JULY 20, 2012 AND STANDARD PLAN D77A DATED MAY 20, 2011 - PAGE 164 OF THE STANDARD PLANS BOOK DATED 2010.

REVISED STANDARD PLAN RSP D77A

2010 REVISED STANDARD PLAN RSP D77A

4-4-13

Dist	COUNTY	ROUTE	POST MILES TOTAL PROJECT	SHEET No.	TOTAL SHEETS
12	Ora	39	9.8/10.5	54	80

REGISTERED CIVIL ENGINEER

July 19, 2013
PLANS APPROVAL DATE

REGISTERED PROFESSIONAL ENGINEER
Gurinderpal Bhullar
No. C48815
Exp. 9-30-14
CIVIL
STATE OF CALIFORNIA

THE STATE OF CALIFORNIA OR ITS OFFICERS OR AGENTS SHALL NOT BE RESPONSIBLE FOR THE ACCURACY OR COMPLETENESS OF SCANNED COPIES OF THIS PLAN SHEET.

TO ACCOMPANY PLANS DATED 06-06-2016

TABLE 1

TAPER LENGTH CRITERIA AND CHANNELIZING DEVICE SPACING

SPEED (S)	MINIMUM TAPER LENGTH * FOR WIDTH OF OFFSET 12 FEET (W)				MAXIMUM CHANNELIZING DEVICE SPACING		
					X	Y	Z **
	TANGENT 2L	MERGING L	SHIFTING L/2	SHOULDER L/3	TAPER	TANGENT	CONFLICT
mph	ft	ft	ft	ft	ft	ft	ft
20	160	80	40	27	20	40	10
25	250	125	63	42	25	50	12
30	360	180	90	60	30	60	15
35	490	245	123	82	35	70	17
40	640	320	160	107	40	80	20
45	1080	540	270	180	45	90	22
50	1200	600	300	200	50	100	25
55	1320	660	330	220	55	110	27
60	1440	720	360	240	60	120	30
65	1560	780	390	260	65	130	32
70	1680	840	420	280	70	140	35

* - For other offsets, use the following merging taper length formula for L:
For speed of 40 mph or less, $L = WS^2/60$
For speed of 45 mph or more, $L = WS$

Where: L = Taper length in feet
W = Width of offset in feet
S = Posted speed limit, off-peak 85th-percentile speed prior to work starting, or the anticipated operating speed in mph

** - Use for taper and tangent sections where there are no pavement markings or where there is a conflict between existing pavement markings and channelizers (CA).

TABLE 2

LONGITUDINAL BUFFER SPACE AND FLAGGER STATION SPACING

SPEED *	Min D **	DOWNGRADE Min D ***		
		-3%	-6%	-9%
mph	ft	ft	ft	ft
20	115	116	120	126
25	155	158	165	173
30	200	205	215	227
35	250	257	271	287
40	305	315	333	354
45	360	378	400	427
50	425	446	474	507
55	495	520	553	593
60	570	598	638	686
65	645	682	728	785
70	730	771	825	891

* - Speed is posted speed limit, off-peak 85th-percentile speed prior to work starting, or the anticipated operating speed in mph

** - Longitudinal buffer space or flagger station spacing

*** - Use on sustained downgrade steeper than -3 percent and longer than 1 mile.

TABLE 3

ADVANCE WARNING SIGN SPACING

ROAD TYPE	DISTANCE BETWEEN SIGNS *		
	A	B	C
	ft	ft	ft
URBAN - 25 mph OR LESS	100	100	100
URBAN - MORE THAN 25 mph TO 40 mph	250	250	250
URBAN - MORE THAN 40 mph	350	350	350
RURAL	500	500	500
EXPRESSWAY / FREEWAY	1000	1500	2640

* - The distances are approximate, are intended for guidance purposes only, and should be applied with engineering judgment. These distances should be adjusted by the Engineer for field conditions, if necessary, by increasing or decreasing the recommmended distances.

STATE OF CALIFORNIA
DEPARTMENT OF TRANSPORTATION

TRAFFIC CONTROL SYSTEM TABLES FOR LANE AND RAMP CLOSURES

NO SCALE

RSP T9 DATED JULY 19, 2013 SUPERSEDES RSP T9 DATED APRIL 19, 2013 THAT SUPPLEMENTS THE STANDARD PLANS BOOK DATED 2010.

REVISED STANDARD PLAN RSP T9

2010 REVISED STANDARD PLAN RSP T9

4-30-13

Dist	COUNTY	ROUTE	POST MILES TOTAL PROJECT	SHEET No.	TOTAL SHEETS
12	Ora	39	9.8/10.5	55	80

REGISTERED CIVIL ENGINEER

April 19, 2013
PLANS APPROVAL DATE

REGISTERED PROFESSIONAL ENGINEER
Gurinderpal Bhullar
No. C48815
Exp. 9-30-14
CIVIL
STATE OF CALIFORNIA

THE STATE OF CALIFORNIA OR ITS OFFICERS OR AGENTS SHALL NOT BE RESPONSIBLE FOR THE ACCURACY OR COMPLETENESS OF SCANNED COPIES OF THIS PLAN SHEET.

TO ACCOMPANY PLANS DATED 06-06-2016

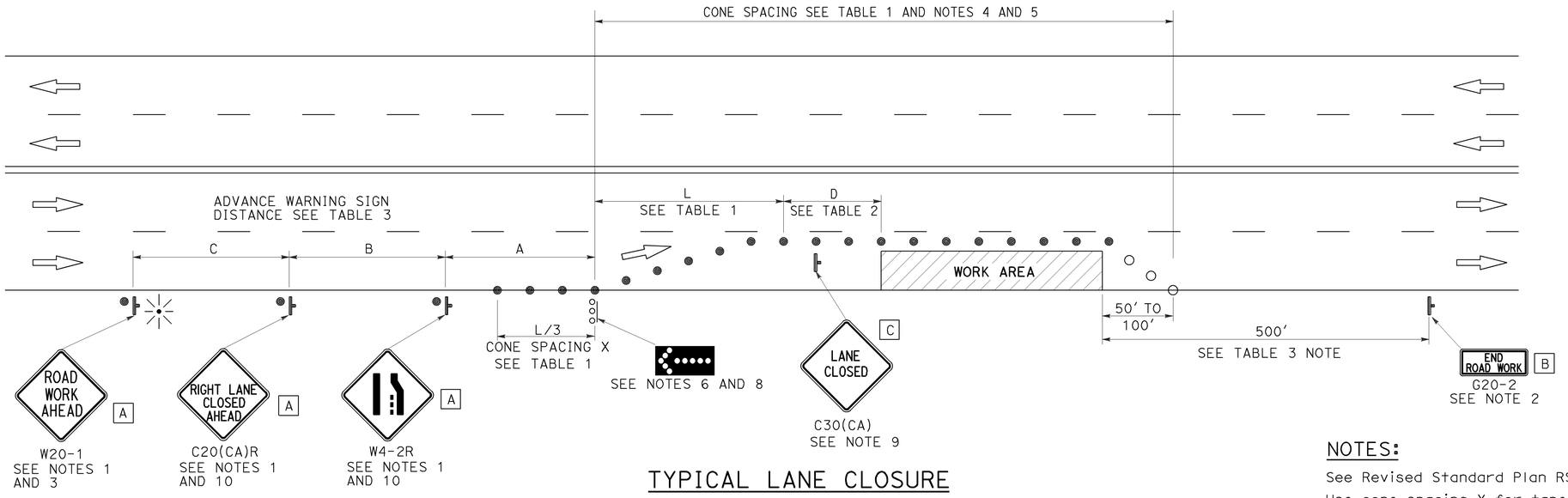

TYPICAL LANE CLOSURE

NOTES:

See Revised Standard Plan RSP T9 for tables.

Use cone spacing X for taper segment, Y for tangent segment or Z for conflict situations, as approriate, per Table 1, unless X, Y, or Z cone spacing is shown on this sheet.

Unless otherwise specified in the special provisions, all temporary warning signs shall have black legend on fluorescent orange background.

California codes are designated by (CA). Otherwise, Federal (MUTCD) codes are shown.

NOTES:

1. Each advance warning sign shall be equipped with at least two flags for daytime closure. Each flag shall be at least 16" x 16" in size and shall be orange or fluorescent red-orange in color. Flashing beacons shall be placed at the locations indicated for lane closure during hours of darkness.
2. A G20-2 "END ROAD WORK" sign, as appropriate, shall be placed at the end of the lane closure unless the end of work area is obvious, or ends within a larger project's limits.
3. If the W20-1 sign would follow within 2000' of a stationary W20-1 or G20-1 "ROAD WORK NEXT _____ MILES", use a C20(CA) sign for the first advance warning sign.
4. All cones used for lane closures during the hours of darkness shall be fitted with retroreflective bands (or sleeves) as specified in the specifications.
5. Portable delineators, placed at one-half the spacing indicated for traffic cones, may be used instead of cones for daytime closures only.
6. Flashing arrow sign shall be either Type I or Type II.
7. For approach speeds over 50 mph, use the "Traffic Control System for Lane Closure On Freeways And Expressways" plan for lane closure details and requirements.
8. A minimum 1500' of sight distance shall be provided where possible for vehicles approaching the first flashing arrow sign. Lane closures shall not begin at the top of crest vertical curve or on a horizontal curve.
9. Place a C30(CA) sign every 2000' throughout length of lane closure.
10. Median lane closures shall conform to the details as shown except that C20(CA)L and W4-2L signs shall be used.
11. At least one person shall be assigned to provide full time maintenance of traffic control devices for lane closure unless, otherwise directed by the Engineer.

LEGEND

- TRAFFIC CONE
- TRAFFIC CONE (OPTIONAL TAPER)
- TEMPORARY TRAFFIC CONTROL SIGN
- FLASHING ARROW SIGN (FAS)
- FAS SUPPORT OR TRAILER
- PORTABLE FLASHING BEACON

SIGN PANEL SIZE (Min)

A	48" x 48"
B	36" x 18"
C	30" x 30"

STATE OF CALIFORNIA
DEPARTMENT OF TRANSPORTATION

TRAFFIC CONTROL SYSTEM FOR LANE CLOSURE ON MULTILANE CONVENTIONAL HIGHWAYS

NO SCALE

RSP T11 DATED APRIL 19, 2013 SUPERSEDES STANDARD PLAN T11 DATED MAY 20, 2011 - PAGE 239 OF THE STANDARD PLANS BOOK DATED 2010.

REVISED STANDARD PLAN RSP T11

2010 REVISED STANDARD PLAN RSP T11

4-2-13

Dist	COUNTY	ROUTE	POST MILES TOTAL PROJECT	SHEET No.	TOTAL SHEETS
12	Ora	39	9.8/10.5	56	80

Devinder Singh
REGISTERED CIVIL ENGINEER

October 30, 2015
PLANS APPROVAL DATE

REGISTERED PROFESSIONAL ENGINEER
Devinder Singh
No. C50470
Exp. 6-30-17
CIVIL
STATE OF CALIFORNIA

THE STATE OF CALIFORNIA OR ITS OFFICERS OR AGENTS SHALL NOT BE RESPONSIBLE FOR THE ACCURACY OR COMPLETENESS OF SCANNED COPIES OF THIS PLAN SHEET.

TO ACCOMPANY PLANS DATED 06-06-2016

2010 REVISED STANDARD PLAN RSP T13

NOTES:

See Revised Standard Plan RSP T9 for tables.

Use cone spacing X for taper segment, Y for tangent segment or Z for conflict situations, as approriate, per Table 1, unless X, Y, or Z cone spacing is shown on this sheet.

Unless otherwise specified in the special provisions, all temporary warning signs shall have black legend on fluorescent orange background.

California codes are designated by (CA). Otherwise, Federal (MUTCD) codes are shown.

TYPICAL LANE CLOSURE WITH REVERSIBLE CONTROL

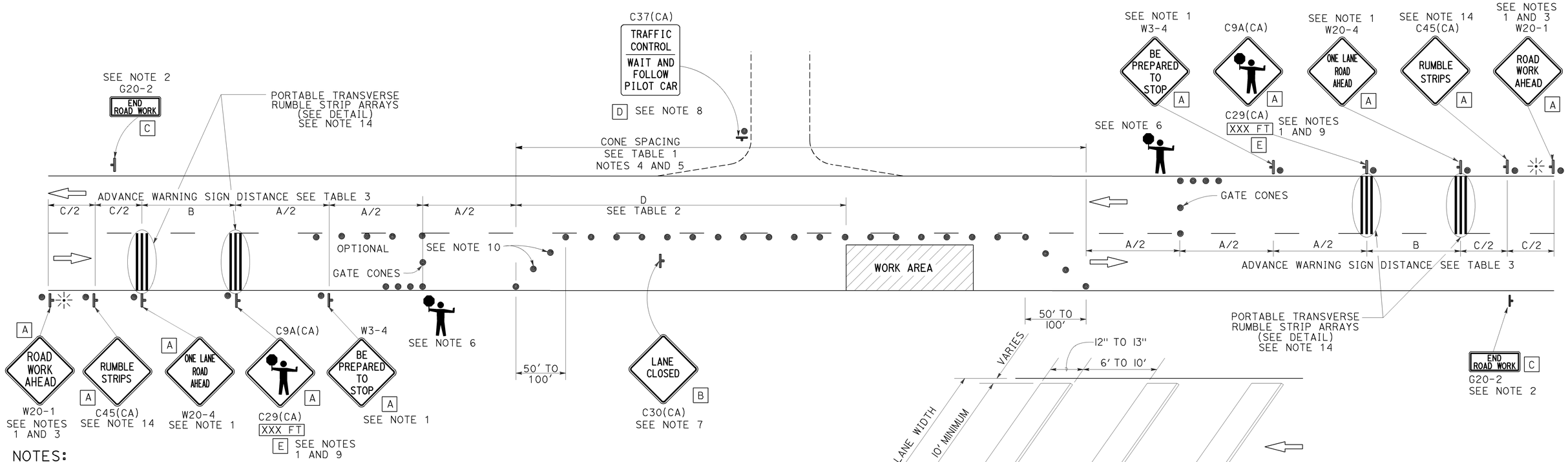

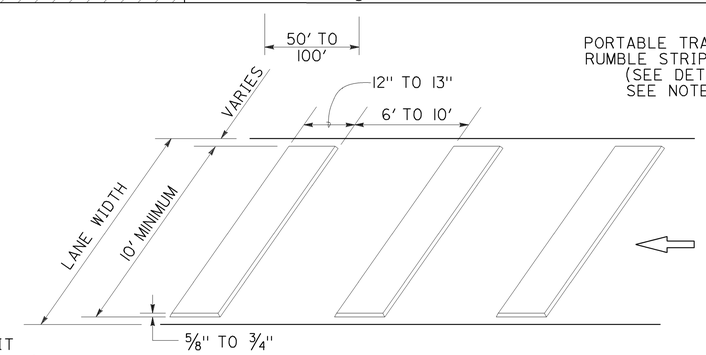

PORTABLE TRANSVERSE RUMBLE STRIP ARRAY DETAIL

NOTES:

1. Each advance warning sign in each direction of travel shall be equipped with at least two flags for daytime closure. Each flag shall be at least 16" x 16" in size and shall be orange or fluorescent red-orange in color. Flashing beacons shall be placed at the locations indicated for lane closure during hours of darkness.
2. A G20-2 "END ROAD WORK" sign, as appropriate, shall be placed at the end of the lane control unless the end of work area is obvious, or ends within a larger project's limits.
3. If the W20-1 sign would follow within 2000' of a stationary W20-1 or G20-1 "ROAD WORK NEXT _____ MILES", use a W20-4 sign for the first advance warning sign.
4. All cones used for lane closures during the hours of darkness shall be fitted with retroreflective bands (or sleeves) as specified in the specifications.
5. Portable delineators, placed at one-half the spacing indicated for traffic cones, may be used instead of cones for daytime closures only.
6. Additional advance flaggers may be required. Flagger should stand in a conspicuous place, be visible to approaching traffic as well as approaching vehicles after the first vehicle has stopped. During the hours of darkness, the flagging-station and flagger shall be illuminated and clearly visible to approaching traffic. The illumination footprint of the lighting on the ground shall be at least 20' in diameter. Place a minimum of four cones at 50' intervals in advance of flagger station as shown.
7. Place C30(CA) "LANE CLOSED" sign at 500' to 1000' intervals throughout extended work areas. They are optional if the work area is visible from the flagger station.
8. When a pilot car is used, place a C37(CA) "TRAFFIC CONTROL-WAIT AND FOLLOW PILOT CAR" sign with black legend on white background at all intersections, driveways and alleys without a flagger within traffic control area. Signs shall be clean and visible at all times. Where traffic can not be effectively self-regulated, at least one flagger shall be used at each intersection within traffic control area.
9. An optional C29(CA) sign may be placed below the C9A(CA) sign.
10. Either traffic cones or barricades shall be placed on the taper. Barricades shall be Type I, II, or III.
11. The color of the portable transverse rumble strips shall be black or orange. Use 2 arrays, each array shall consist of 3 rumble strips.
12. Portable transverse rumble strips shall not be placed on sharp horizontal or vertical curves nor shall they be placed through pedestrian crossings.
13. If the portable transverse rumble strips become out of alignment (skewed) by more than 6 inches, measured from one end to the other, they shall be readjusted to bring the placement back to the original location.
14. Portable transverse rumble strips are not required if any one of the following conditions is satisfied:
    A. Work duration occupies a location for four hours or less
    B. Posted speed limit is below 45 MPH
    C. Work is of emergency nature
    D. Work zone is in snow or icy weather conditions

LEGEND

- TRAFFIC CONE
- TEMPORARY TRAFFIC CONTROL SIGN
- PORTABLE FLASHING BEACON
- FLAGGER

SIGN PANEL SIZE (Min)

A	48" x 48"
B	30" x 30"
C	36" x 18"
D	36" x 42"
E	20" x 7"

STATE OF CALIFORNIA
DEPARTMENT OF TRANSPORTATION

TRAFFIC CONTROL SYSTEM FOR LANE CLOSURE ON TWO LANE CONVENTIONAL HIGHWAYS

NO SCALE

RSP T13 DATED OCTOBER 30, 2015 SUPERSEDES RSP T13 DATED OCTOBER 17, 2014, RSP T13 DATED JULY 18, 2014 AND RSP T13 DATED APRIL 19, 2013 AND STANDARD PLAN T13 DATED MAY 20, 2011 - PAGE 241 OF THE STANDARD PLANS BOOK DATED 2010.

REVISED STANDARD PLAN RSP T13

10-13-15

Dist	COUNTY	ROUTE	POST MILES TOTAL PROJECT	SHEET No.	TOTAL SHEETS
12	Ora	39	9.8/10.5	57	80

Theresa Gabriel
REGISTERED ELECTRICAL ENGINEER

October 30, 2015
PLANS APPROVAL DATE

REGISTERED PROFESSIONAL ENGINEER Theresa Aziz Gabriel No. E15129 Exp. 6-30-16 ELECTRICAL STATE OF CALIFORNIA

THE STATE OF CALIFORNIA OR ITS OFFICERS OR AGENTS SHALL NOT BE RESPONSIBLE FOR THE ACCURACY OR COMPLETENESS OF SCANNED COPIES OF THIS PLAN SHEET.

TO ACCOMPANY PLANS DATED 06-06-2016

LEGEND:

AB	ABANDON. IF APPLIED TO CONDUIT, REMOVE CONDUCTORS
BC	INSTALL PULL BOX IN EXISTING CONDUIT RUN
BP	PEDESTRIAN BARRICADE, TYPE AS INDICATED ON PLAN
CB	INSTALL CONDUIT INTO EXISTING PULL BOX
CC	CONNECT NEW AND EXISTING CONDUIT. REMOVE EXISTING CONDUCTORS AND INSTALL CONDUCTORS AS INDICATED
CF	CONDUIT TO REMAIN FOR FUTURE USE. REMOVE CONDUCTORS. INSTALL PULL TAPE
DH	DETECTOR HANDHOLE
FA	FOUNDATION TO BE ABANDONED
IS	INSTALL SIGN ON SIGNAL MAST ARM
NS	NO SLIP BASE ON STANDARD
PEC	PHOTOELECTRIC CONTROL
PEU	PHOTOELECTRIC UNIT
RC	EQUIPMENT OR MATERIAL TO BE REMOVED AND BECOME THE PROPERTY OF THE CONTRACTOR
RE	REMOVE ELECTROLIER, FUSES AND BALLAST. TAPE ENDS OF CONDUCTORS
RL	RELOCATE EQUIPMENT
RR	REMOVE AND REUSE EQUIPMENT
RS	REMOVE AND SALVAGE EQUIPMENT
SC	SPLICE NEW TO EXISTING CONDUCTORS
SD	SERVICE DISCONNECT
TSP	TELEPHONE SERVICE POINT

ABBREVIATIONS

AC+	UNDERGROUNDED CONDUCTOR
APS	ACCESSIBLE PEDESTRIAN SIGNAL
Batt	BATTERY
BBS	BATTERY BACKUP SYSTEM
BC	BOLT CIRCLE
Blk	BLACK
BP	BYPASS
BPB	BICYCLE PUSH BUTTON
C	CONDUIT
CB	CIRCUIT BREAKER
CCTV	CLOSED CIRCUIT TELEVISION
Ckt	CIRCUIT
CMS	CHANGEABLE MESSAGE SIGN
Ctid	CALTRANS IDENTIFICATION
Comm	COMMUNICATION
Cntl	CONTROL
DF	DEPARTMENT-FURNISHED
DLC	LOOP DETECTOR LEAD-IN CABLE
EMS	EXTINGUISHABLE MESSAGE SIGN
EVUC	EMERGENCY VEHICLE UNIT CABLE
EVUD	EMERGENCY VEHICLE UNIT DETECTOR
FB	FLASHING BEACON
FBCA	FLASHING BEACON CONTROL ASSEMBLY
FBS	FLASHING BEACON WITH SLIP BASE
FO	FIBER OPTIC
G	EQUIPMENT GROUNDING CONDUCTOR
GB	GROUND BUS
GFCI	GROUND FAULT CIRCUIT INTERRUPTER
Grn	GREEN
HAR	HIGHWAY ADVISORY RADIO
Hex	HEXAGONAL
HPS	HIGH PRESSURE SODIUM
IISNS	INTERNALLY ILLUMINATED STREET NAME SIGN
ISL	INDUCTION SIGN LIGHTING
LED	LIGHT EMITTING DIODE
LMA	LUMINAIRE MAST ARM
LPS	LOW PRESSURE SODIUM
Ltg	LIGHTING
Lum	LUMINAIRE
M	METERED
MAT	MAST ARM MOUNTING TOP ATTACHMENT
MAS	MAST ARM MOUNTING SIDE ATTACHMENT
MBPS	MANUAL BYPASS SWITCH
M/M	MULTIPLE TO MULTIPLE TRANSFORMER
Mtg	MOUNTING
MV	MERCURY VAPOR LIGHTING FIXTURE
MVDS	MICROWAVE VEHICLE DETECTION SYSTEM
N	NEUTRAL (GROUNDED CONDUCTOR)
NB	NEUTRAL BUS
NC	NORMALLY CLOSE
NO	NORMALLY OPEN
P	CIRCUIT BREAKER'S POLE
PB	PULL BOX
PBA	PUSH BUTTON ASSEMBLY
PEC	PHOTOELECTRIC CONTROL
Ped	PEDESTRIAN
PEU	PHOTOELECTRIC UNIT
PT	CONDUIT WITH PULL TAPE
PTR	POWER TRANSFER RELAY
RE	RELOCATED EQUIPMENT
RM	RAMP METERING
RWIS	ROADSIDE WEATHER INFORMATION SYSTEM
SB	SLIP BASE
SIC	SIGNAL INTERCONNECT CABLE
Sig	SIGNAL
SMA	SIGNAL MAST ARM
SNS	STREET NAME SIGN
SP	SERVICE POINT
TB	TERMINAL BOARD
TDC	TELEPHONE DEMARCATION CABINET
Temp	TEMPERATURE
TMS	TRAFFIC MONITORING STATION
TOS	TRAFFIC OPERATIONS SYSTEM
UPS	UNINTERRUPTABLE POWER SUPPLY
UPSC	UNINTERRUPTABLE POWER SUPPLY CONTROLLER
Veh	VEHICLE
VIVDS	VIDEO IMAGE VEHICLE DETECTION SYSTEM
Wht	WHITE
WIM	WEIGH-IN-MOTION
Xfmr	TRANSFORMER

SOFFIT AND WALL-MOUNTED LUMINAIRES

- PENDANT SOFFIT LUMINAIRE, 70 W HPS UNLESS OTHERWISE SPECIFIED
- FLUSH-MOUNTED SOFFIT LUMINAIRE, 70 W HPS UNLESS OTHERWISE SPECIFIED
- WALL-MOUNTED LUMINAIRE, 70 W HPS UNLESS OTHERWISE SPECIFIED
- EXISTING SOFFIT OR WALL-MOUNTED LUMINAIRE TO REMAIN UNMODIFIED
- (M) EXISTING SOFFIT OR WALL-MOUNTED LUMINAIRE TO BE MODIFIED AS SPECIFIED

NOTE:
Arrow indicates "street side" of luminaire.

COMMONLY USED SYMBOLS FOR UNITED STATES CUSTOMARY UNITS OF MEASUREMENT:

SYMBOL	DEFINITIONS
Ω	OHMS
min	MINUTE
s	SECOND
bps	BITS PER SECOND
Bps	BYTES PER SECOND
A	AMPERE
V	VOLT
$V_{(dc)}$	VOLT (DIRECT CURRENT)
$V_{(ac)}$	VOLT (ALTERNATING CURRENT)
FC	FOOT - CANDLE
W	WATTS
VA	VOLT-AMPERE
M	MEGA
k	KILO
m	MILLI
μ	MICRO
P	PICO
Hz	HERTZ

MISCELLANEOUS ELECTROLIERS

NEW	EXISTING	
		LUMINAIRE ON WOOD POLE
		NON-STANDARD ELECTROLIER (SEE PROJECT LEGEND)
		CITY ELECTROLIER
		ELECTROLIER FOUNDATION (FUTURE INSTALLATION)

NOTES:

1. LED luminaires shall be 235 W when installed on Type 21, 21D, 30, 31 and 32 Standards, unless otherwise specified. LED luminaires shall be 165 W when installed on other type standards or poles, unless otherwise specified.
2. Luminaires shall be the cutoff type, ANSI Type III medium cutoff lighting distribution, unless otherwise specified.

STANDARD ELECTROLIER

NEW	EXISTING	STANDARD TYPE
		15
		15D
		15 STRUCTURE
		15D STRUCTURE
		21
		21D
		21 STRUCTURE
		21D STRUCTURE
		30
		31
		32

STATE OF CALIFORNIA
DEPARTMENT OF TRANSPORTATION

ELECTRICAL SYSTEMS (LEGEND AND ABBREVIATIONS)

NO SCALE

RSP ES-1A DATED OCTOBER 30, 2015 SUPERSEDES RSP ES-1A DATED JULY 19, 2013 AND STANDARD PLAN ES-1A DATED MAY 20, 2011 - PAGE 425 OF THE STANDARD PLANS BOOK DATED 2010.

REVISED STANDARD PLAN RSP ES-1A

2010 REVISED STANDARD PLAN RSP ES-1A

9-29-15

Dist	COUNTY	ROUTE	POST MILES TOTAL PROJECT	SHEET No.	TOTAL SHEETS
12	Ora	39	9.8/10.5	58	80

Theresa Gabriel
REGISTERED ELECTRICAL ENGINEER

October 30, 2015
PLANS APPROVAL DATE

REGISTERED PROFESSIONAL ENGINEER
Theresa Aziz Gabriel
No. E15129
Exp. 6-30-16
ELECTRICAL
STATE OF CALIFORNIA

THE STATE OF CALIFORNIA OR ITS OFFICERS OR AGENTS SHALL NOT BE RESPONSIBLE FOR THE ACCURACY OR COMPLETENESS OF SCANNED COPIES OF THIS PLAN SHEET.

TO ACCOMPANY PLANS DATED 06-06-2016

CONDUIT

NEW	EXISTING	
		LIGHTING CONDUIT, UNLESS OTHERWISE INDICATED OR NOTED
		TRAFFIC SIGNAL CONDUIT
C	c	COMMUNICATION CONDUIT
T	t	TELEPHONE CONDUIT
F	f	FIRE ALARM CONDUIT
FO	fo	FIBER OPTIC CONDUIT
		CONDUIT TERMINATION
R	r	CONDUIT RISER ATTACHED TO THE STRUCTURE OR SERVICE POLE

SERVICE EQUIPMENT

NEW	EXISTING	
OH	oh	OVERHEAD LINES
U	U	WOOD POLE, "U" INDICATES UTILITY OWNED
		POLE GUY WITH ANCHOR
		UTILITY TRANSFORMER - GROUND MOUNTED
III	III	SERVICE EQUIPMENT ENCLOSURE TYPE. DOOR INDICATES FRONT OF ENCLOSURE
T	t	TELEPHONE DEMARCATION CABINET

POLE-MOUNTED SERVICE DESIGNATION

TYPE H SERVICE, 28'-10" — TYPE OF INSTALLATION AND POLE HEIGHT ABOVE GRADE

FLASHING BEACON

NEW	EXISTING	
R	R	FLASHING BEACON (ONE VEHICLE SIGNAL HEAD WITH BACKPLATE AND VISOR) "R" INDICATES RED INDICATION, "Y" INDICATES YELLOW INDICATION
Y Y	Y Y	FLASHING BEACON WITH TYPE 15-FBS STANDARD AND A SIGN.
R R	R R	FLASHING BEACON WITH TYPES 9, 9A OR 9B SIGN UNLESS OTHERWISE SPECIFIED OR INDICATED

SIGNAL EQUIPMENT

NEW	EXISTING	
		PEDESTRIAN SIGNAL HEAD
		PUSH BUTTON ASSEMBLY POST
		PEDESTRIAN BARRICADE
		VEHICLE SIGNAL HEAD (WITH BACKPLATE AND 3-SECTIONS: RED, YELLOW AND GREEN)
		VEHICLE SIGNAL HEAD WITH ANGLE VISOR
PV	PV	MODIFICATIONS OF BASIC SYMBOL: "L" INDICATES ALL NON-ARROW SECTIONS LOUVERED "LG" INDICATES LOUVERED GREEN SECTION ONLY "PV" INDICATES ALL 12" SECTIONS PROGRAMMED VISIBILITY "8" INDICATES ALL 8" SECTIONS (ONLY WHEN SPECIFIED)
		VEHICLE SIGNAL HEAD CONSISTING OF RED, YELLOW AND GREEN LEFT ARROW SECTIONS
		VEHICLE SIGNAL HEAD CONSISTING OF RED AND YELLOW SECTIONS WITH AN UP GREEN ARROW SECTION
		VEHICLE SIGNAL HEAD (5 SECTION) CONSISTING OF RED, YELLOW AND GREEN SECTIONS WITH YELLOW AND GREEN RIGHT ARROW SECTIONS
		TYPE 15TS STANDARD WITH VEHICLE SIGNAL HEAD AND LUMINAIRE
		TYPE 21TS STANDARD WITH VEHICLE SIGNAL HEAD AND LUMINAIRE
		STANDARD WITH LUMINAIRE AND SIGNAL MAST ARMS AND ATTACHED VEHICLE SIGNAL HEADS
		TYPE 1 STANDARD WITH ATTACHED VEHICLE SIGNAL HEADS
		STANDARD WITH A SIGNAL MAST ARM, ATTACHED VEHICLE SIGNAL HEADS AND INTERNALLY ILLUMINATED STREET NAME SIGN
		CONTROLLER ASSEMBLY. DOOR INDICATES FRONT OF CABINET

SIGNAL EQUIPMENT Cont

NEW	EXISTING	
		GUARD POST
		TYPE 1 STANDARD WITH RAMP METERING SIGN
		OPTICAL DETECTOR FOR THE EMERGENCY VEHICLE DETECTION

NOTES:

1. All signal sections shall be 12" unless shown otherwise.
2. Signal heads shall be provided with backplates unless shown otherwise.

ILLUMINATED OVERHEAD SIGN

NEW	EXISTING	
		SINGLE POST, SINGLE ILLUMINATED SIGN, BALANCED BUTTERFLY
		SINGLE POST, DOUBLE ILLUMINATED SIGN, BALANCED BUTTERFLY
		SINGLE POST, SINGLE ILLUMINATED SIGN, FULL CANTILEVER
		DOUBLE POST, SINGLE ILLUMINATED SIGN
		SINGLE ILLUMINATED SIGN MOUNTED ON STRUCTURE
		DOUBLE POST, SINGLE ILLUMINATED SIGN WITH ELECTROLIER

STATE OF CALIFORNIA
DEPARTMENT OF TRANSPORTATION

ELECTRICAL SYSTEMS (LEGEND AND ABBREVIATIONS)

NO SCALE

RSP ES-1B DATED OCTOBER 30, 2015 SUPERSEDES RSP ES-1B DATED JULY 19, 2013 AND STANDARD PLAN ES-1B DATED MAY 20, 2011 - PAGE 426 OF THE STANDARD PLANS BOOK DATED 2010.

REVISED STANDARD PLAN RSP ES-1B

2010 REVISED STANDARD PLAN RSP ES-1B

8-19-15

Dist	COUNTY	ROUTE	POST MILES TOTAL PROJECT	SHEET No.	TOTAL SHEETS
12	Ora	39	9.8/10.5	59	80

Theresa Gabriel
REGISTERED ELECTRICAL ENGINEER

April 15, 2016
PLANS APPROVAL DATE

REGISTERED PROFESSIONAL ENGINEER
Theresa Aziz Gabriel
No. E15129
Exp. 6-30-16
ELECTRICAL
STATE OF CALIFORNIA

THE STATE OF CALIFORNIA OR ITS OFFICERS OR AGENTS SHALL NOT BE RESPONSIBLE FOR THE ACCURACY OR COMPLETENESS OF SCANNED COPIES OF THIS PLAN SHEET.

TO ACCOMPANY PLANS DATED 06-06-2016

2010 REVISED STANDARD PLAN RSP ES-1C

EQUIPMENT IDENTIFICATION

ILLUMINATED SIGN IDENTIFICATION:

SIGN No. 12345
10 ISL SCI 1.0

- SIGN EQUIPMENT IDENTIFICATION CHARACTERS - PLACE ON POST OR STRUCTURE
- TRANSFORMER RATING (kVA)
- LIGHTING CONTROL TYPE
- NUMBER AND TYPE OF FIXTURES

} DO NOT PLACE ON STANDARD OR STRUCTURE

ELECTROLIER OR EQUIPMENT IDENTIFICATION:

L2745 - 15'-0"

- MAST ARM LENGTH, IF SHOWN. DO NOT PLACE ON STANDARD OR STRUCTURE
- EQUIPMENT IDENTIFICATION CHARACTERS - PLACE ON STANDARD OR STRUCTURE. EXISTING EQUIPMENT IDENTIFICATION CHARACTERS ARE SHOWN IN PARENTHESIS

CONDUIT AND CONDUCTOR IDENTIFICATION:

1½"C, 2#10, 15#14, 2 DLC, 12P#18 (PAIR)

- NUMBER AND SIZE OF CONDUCTORS AND CABLES
- SIZE OF CONDUIT IN INCHES

ø1, ø2, ø2P, etc.	TRAFFIC PHASE IDENTIFICATION FOR SIGNALS, DETECTORS AND PHASE DIAGRAMS
1 2 3	LEGEND NUMBERS
A B C	EQUIPMENT, SIGNAL POLES, INSTALLATION OR ITEMS
1 2 3	CONDUIT RUN NUMBERS

SIGNAL AND LIGHTING STANDARD (TYPICAL DESIGNATION):

19A - 3 - 100

- WIND VELOCITY = 100 mph
- CASE 3 ARM LOADING
- STANDARD TYPE
- STANDARD PLAN SHEET NUMBER
- DETAIL, NUMBER, SECTION, TYPE OR ELEVATION

MISCELLANEOUS EQUIPMENT

NEW	EXISTING	
CMS	cms	CHANGEABLE MESSAGE SIGN
		CLOSED CIRCUIT TELEVISION CAMERA
		HIGHWAY ADVISORY RADIO POLE AND ANTENNA
EMS	ems	LED EXTINGUISHABLE MESSAGE SIGN
M V	m v	DETECTION DEVICE M = MICROWAVE SENSOR V = VIDEO IMAGE SENSOR

WIRING DIAGRAM LEGEND

- EXTERNAL CONDUCTOR
- CONDUCTOR OR BUS
- TIE POINT
- CONTACTOR COIL
- CONTACTOR, NO CONTACT
- TERMINAL BLOCKS
- CONTACTOR, NC CONTACT
- ENCLOSURE BOND
- GROUNDING ELECTRODE
- CIRCUIT BREAKER
- RECEPTACLE

PULL BOXES

NEW	EXISTING	
		PULL BOX, No. 5 UNLESS OTHERWISE INDICATED OR NOTED
3	9A(21)	PULL BOX, ADDITIONAL DESIGNATIONS OR DESCRIPTIONS

3 No. 3½ PULL BOX
5 No. 5 PULL BOX
6 No. 6 PULL BOX
7 No. 7 PULL BOX (CEILING)
8 No. 8 PULL BOX
9 No. 9 PULL BOX (STRUCTURE)
9A No. 9A PULL BOX (STRUCTURE)

(C) COMMUNICATIONS PULL BOX
(E) PULL BOX WITH EXTENSION
(S) SPRINKLER CONTROL PULL BOX
(21) ANCHOR BOLTS AND CONDUIT FOR FUTURE INSTALLATION OF TYPE 21 STANDARD
(T) TRAFFIC PULL BOX

VEHICLE DETECTORS

5 J 9 U

- VEHICLE DETECTOR DESIGNATION
- U = UPPER
  L = LOWER
- SLOT NUMBER IN INPUT FILE
- INPUT FILE (I OR J)
- PHASE

NEW	EXISTING	
		TYPE A LOOP DETECTOR. OUTLINE OF SAW CUT SHOWN
		TYPE B LOOP DETECTOR. OUTLINE OF SAW CUT SHOWN
		TYPE C LOOP DETECTOR. OUTLINE OF SAW CUT SHOWN
		TYPE D LOOP DETECTOR. OUTLINE OF SAW CUT SHOWN
		TYPE E LOOP DETECTOR. OUTLINE OF SAW CUT SHOWN
		TYPE Q LOOP DETECTOR. OUTLINE OF SAW CUT SHOWN
DH	dh	DETECTOR HANDHOLE
		MICROWAVE OR VIDEO DETECTION ZONE

STATE OF CALIFORNIA
DEPARTMENT OF TRANSPORTATION

ELECTRICAL SYSTEMS (LEGEND AND ABBREVIATIONS)

NO SCALE

RSP ES-1C DATED APRIL 15, 2016 SUPERSEDES RSP ES-1C DATED OCTOBER 30, 2015 AND RSP ES-1C DATED JULY 19, 2013 AND STANDARD PLAN ES-1C DATED MAY 20, 2011 - PAGE 427 OF THE STANDARD PLANS BOOK DATED 2010.

REVISED STANDARD PLAN RSP ES-1C

1-22-16

Dist	COUNTY	ROUTE	POST MILES TOTAL PROJECT	SHEET No.	TOTAL SHEETS
12	Ora	39	9.8/10.5	60	80

Theresa Gabriel
REGISTERED ELECTRICAL ENGINEER

October 30, 2015
PLANS APPROVAL DATE

REGISTERED PROFESSIONAL ENGINEER
Theresa Aziz Gabriel
No. E15129
Exp. 6-30-16
ELECTRICAL
STATE OF CALIFORNIA

THE STATE OF CALIFORNIA OR ITS OFFICERS OR AGENTS SHALL NOT BE RESPONSIBLE FOR THE ACCURACY OR COMPLETENESS OF SCANNED COPIES OF THIS PLAN SHEET.

TO ACCOMPANY PLANS DATED 06-06-2016

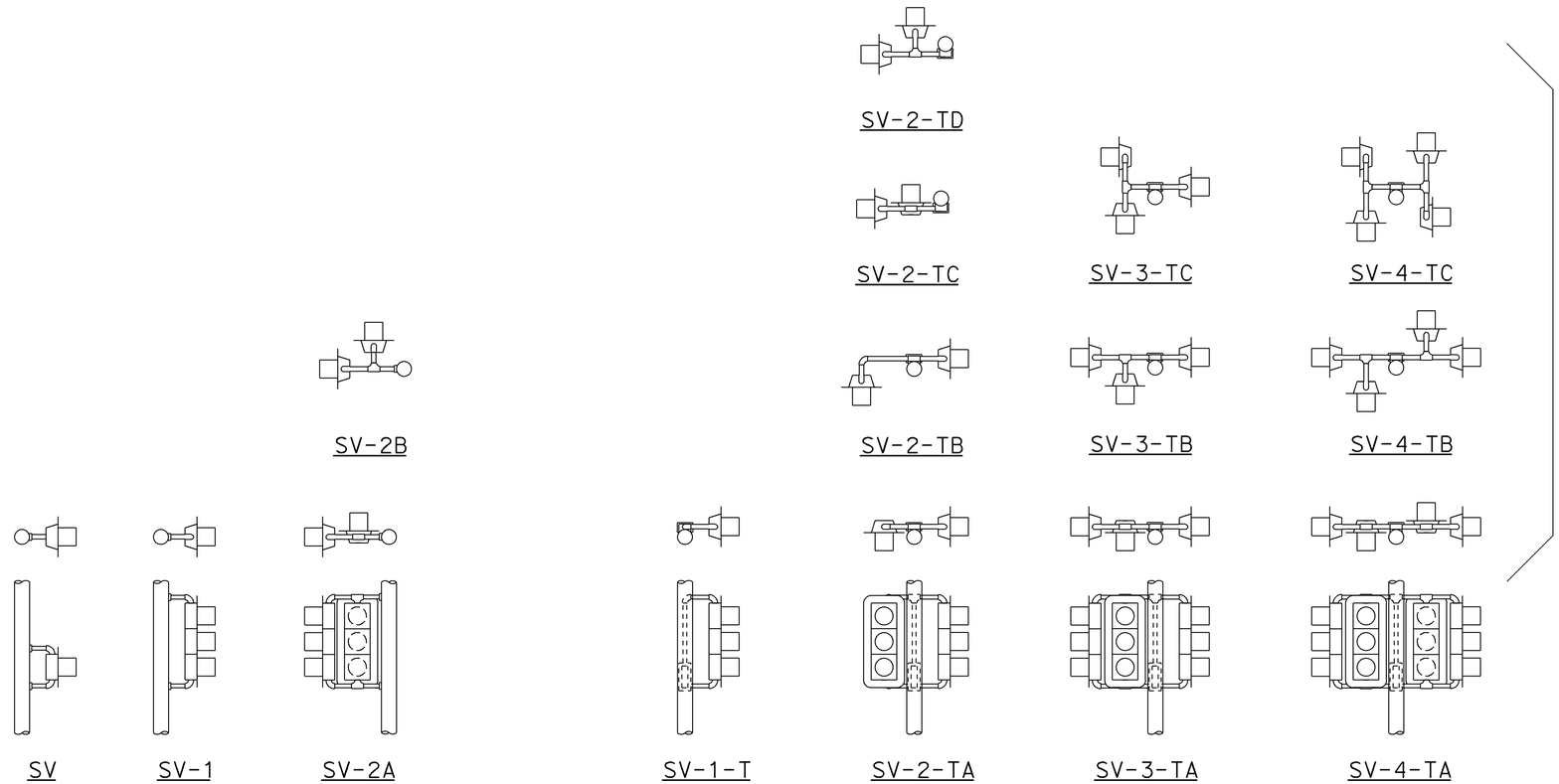

SIDE MOUNTINGS

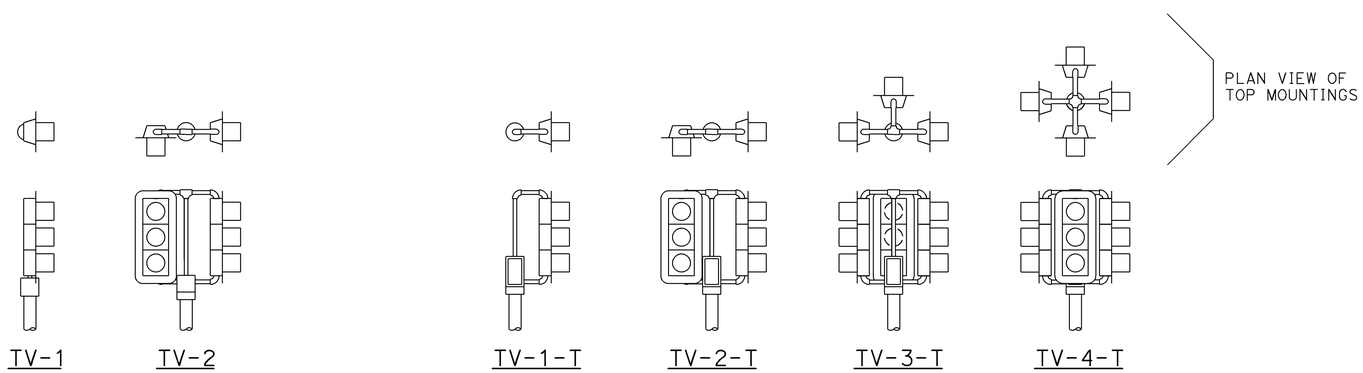

TOP MOUNTINGS

ABBREVIATIONS:

SV	SIDE MOUNTED SIGNAL HEADS
T	TERMINAL COMPARTMENT
TV	TOP MOUNTED SIGNAL HEADS
1, 2, 3, 4	NUMBER OF SIGNAL FACES (3 - SECTION, UNLESS OTHERWISE INDICATED)
A, B, C, D	CONFIGURATION OF SIGNALS

NOTES:

1. Mountings shall be oriented to provide maximum horizontal clearance to adjacent roadway.
2. Bracket arms shall be long enough to permit proper alignment of signals and backplate installation.
3. See Revised Standard Plans RSP ES-4D and RSP ES-4E for attachment fitting details.

STATE OF CALIFORNIA
DEPARTMENT OF TRANSPORTATION

ELECTRICAL SYSTEMS (SIGNAL HEADS AND MOUNTINGS)

NO SCALE

RSP ES-4A DATED OCTOBER 30, 2015 SUPERSEDES RSP ES-4A DATED JULY 19, 2013 AND STANDARD PLAN ES-4A DATED MAY 20, 2011 - PAGE 443 OF THE STANDARD PLANS BOOK DATED 2010.

REVISED STANDARD PLAN RSP ES-4A

2010 REVISED STANDARD PLAN RSP ES-4A

9-28-15

Dist	COUNTY	ROUTE	POST MILES TOTAL PROJECT	SHEET No.	TOTAL SHEETS
12	Ora	39	9.8/10.5	61	80

Theresa Gabriel
REGISTERED ELECTRICAL ENGINEER

October 30, 2015
PLANS APPROVAL DATE

REGISTERED PROFESSIONAL ENGINEER
Theresa Aziz Gabriel
No. E15129
Exp. 6-30-16
ELECTRICAL
STATE OF CALIFORNIA

THE STATE OF CALIFORNIA OR ITS OFFICERS OR AGENTS SHALL NOT BE RESPONSIBLE FOR THE ACCURACY OR COMPLETENESS OF SCANNED COPIES OF THIS PLAN SHEET.

TO ACCOMPANY PLANS DATED 06-06-2016

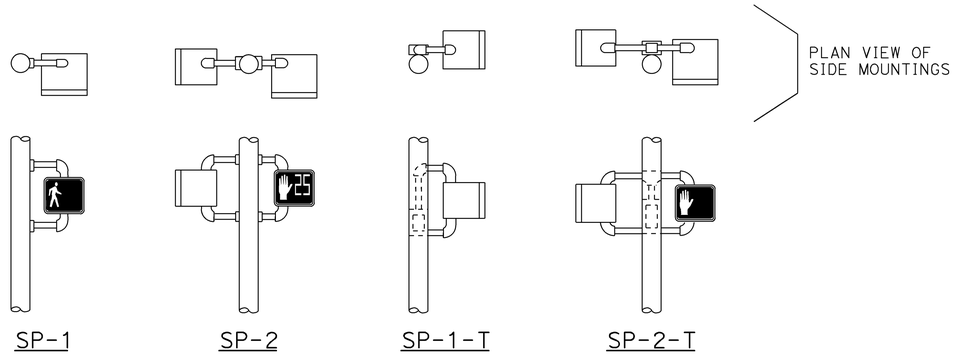

SIDE MOUNTINGS

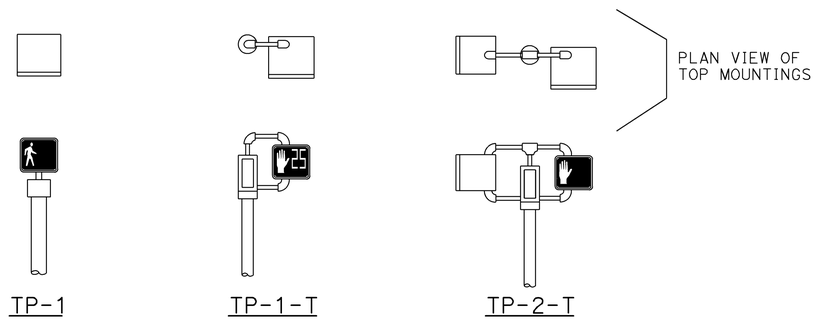

TOP MOUNTINGS

PEDESTRIAN SIGNAL HEAD MOUNTINGS

DETAIL A

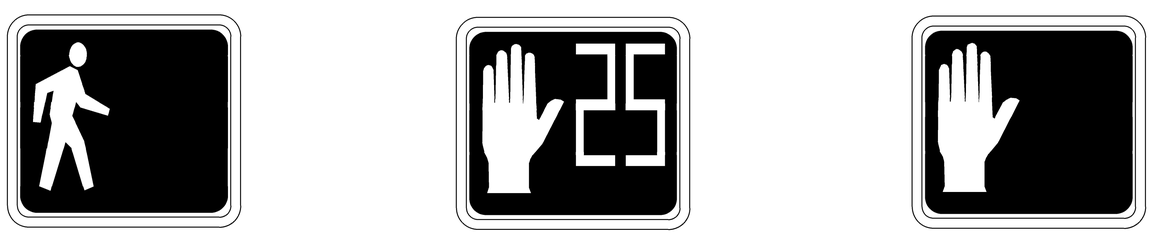

PERSON WALKING INTERVAL FLASHING UPRAISED HAND INTERVAL STEADY UPRAISED HAND INTERVAL

LED COUNTDOWN PEDESTRIAN SIGNAL FACE MODULE

DETAIL B

NOTES:

1. Mounting shall be oriented to provide maximum horizontal clearance to adjacent roadway.
2. Bracket arms shall be long enough to permit proper alignment of signals.
3. See Revised Standard Plan RSP ES-4D for attachment fittings details.

ABBREVIATIONS:

1, 2	NUMBER OF SIGNAL FACES
SP	SIDE MOUNTED PEDESTRIAN SIGNAL
T	TERMINAL COMPARTMENT
TP	TOP MOUNTED PEDESTRIAN SIGNAL

STATE OF CALIFORNIA
DEPARTMENT OF TRANSPORTATION

ELECTRICAL SYSTEMS (PEDESTRIAN SIGNAL HEADS)

NO SCALE

RSP ES-4B DATED OCTOBER 30, 2015 SUPERSEDES RSP ES-4B DATED JULY 19, 2013 AND STANDARD PLAN ES-4B DATED MAY 20, 2011 - PAGE 444 OF THE STANDARD PLANS BOOK DATED 2010.

REVISED STANDARD PLAN RSP ES-4B

2010 REVISED STANDARD PLAN RSP ES-4B

9-1-15

Dist	COUNTY	ROUTE	POST MILES TOTAL PROJECT	SHEET No.	TOTAL SHEETS
12	Ora	39	9.8/10.5	62	80

Theresa Gabriel
REGISTERED ELECTRICAL ENGINEER

October 30, 2015
PLANS APPROVAL DATE

REGISTERED PROFESSIONAL ENGINEER
Theresa Aziz Gabriel
No. E15129
Exp. 6-30-16
ELECTRICAL
STATE OF CALIFORNIA

THE STATE OF CALIFORNIA OR ITS OFFICERS OR AGENTS SHALL NOT BE RESPONSIBLE FOR THE ACCURACY OR COMPLETENESS OF SCANNED COPIES OF THIS PLAN SHEET.

TO ACCOMPANY PLANS DATED 06-06-2016

2010 REVISED STANDARD PLAN RSP ES-4C

TUNNEL FULL CIRCLE CAP OR CUT AWAY LEFT ANGLE
(Right angle is reversed of figure)

VISORS

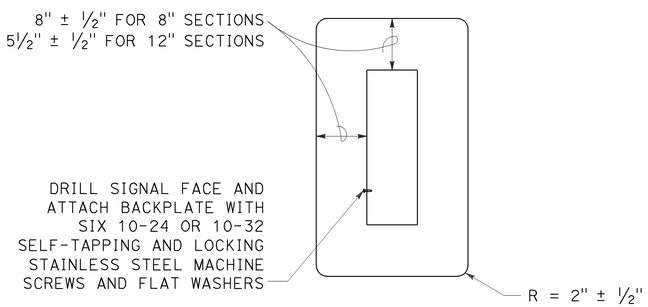

8" AND 12" SECTIONS

BACKPLATE

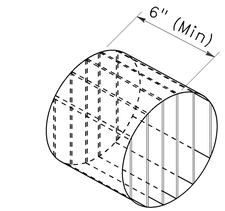

ISOMETRIC VIEW

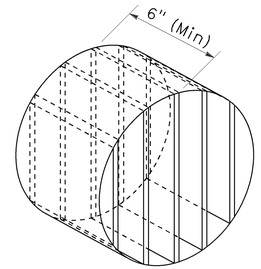

ISOMETRIC VIEW

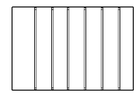

SECTION A-A

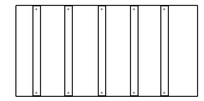

SECTION B-B

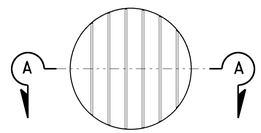

8" DIAMETER FRONT VIEW

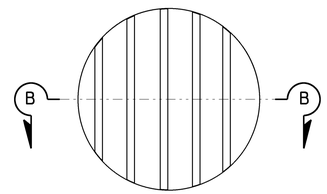

12" DIAMETER FRONT VIEW

DIRECTIONAL LOUVER

Directional louvers shall be oriented and secured in place with one plated brass machine screw and nut.

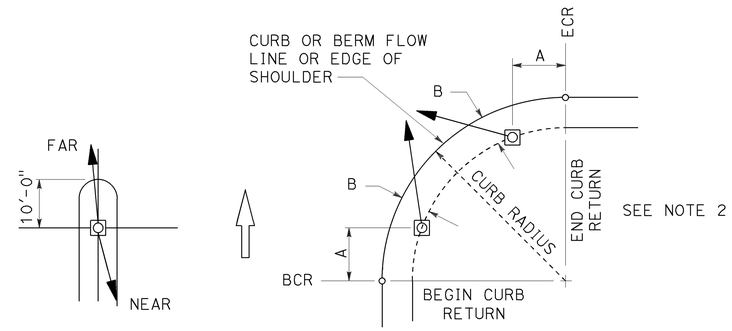

NOTES:

1. Typical signal pole placement unless dimensioned on plans.
2. For A and B dimensions, see Pole Schedule.

SIGNAL STANDARD PLACEMENT DIMENSIONS AND EQUIPMENT LOCATIONS

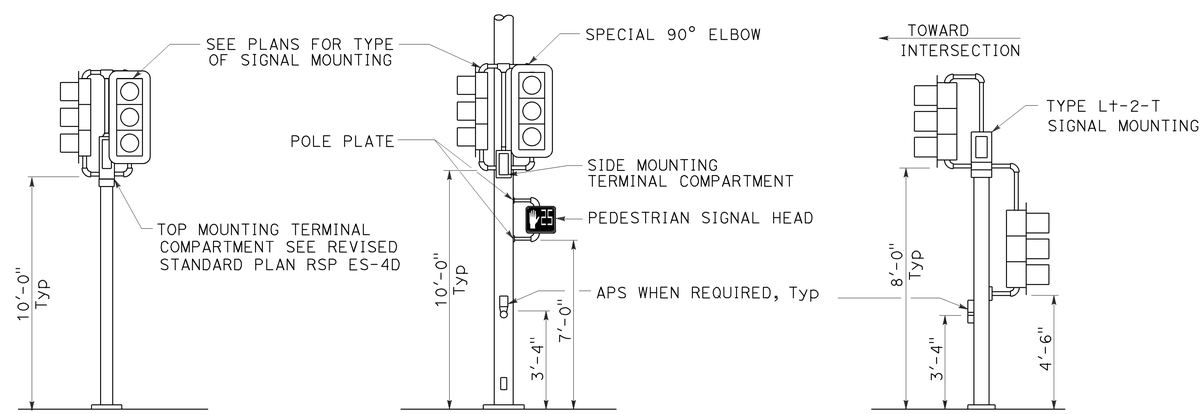

TOP MOUNTED SIGNALS (TV)
Type 1-A, 1-B, 1-C and 1-D standard as indicated on the plans

SIDE MOUNTED SIGNALS (SV AND SP)
Normally used on standards with luminaire or signal mast arm

LEFT TURN LANE SIGNAL
Type 1-A, 1-B, 1-C and 1-D standard as indicated on plans

TYPICAL SIGNAL HEAD INSTALLATIONS

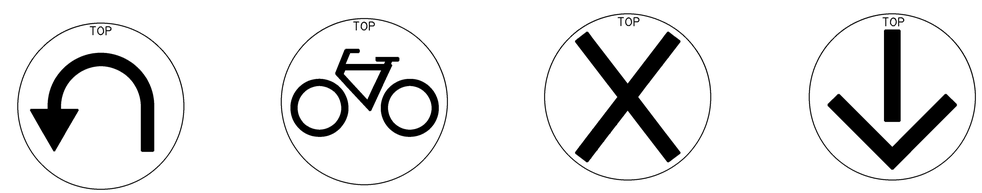

U-TURN BICYCLE LANE CONTROL LANE CONTROL

SIGNAL FACES

STATE OF CALIFORNIA
DEPARTMENT OF TRANSPORTATION

ELECTRICAL SYSTEMS (SIGNAL HEADS AND MOUNTINGS)

NO SCALE

RSP ES-4C DATED OCTOBER 30, 2015 SUPERSEDES RSP ES-4C DATED JULY 19, 2013 AND STANDARD PLAN ES-4C DATED MAY 20, 2011 - PAGE 445 OF THE STANDARD PLANS BOOK DATED 2010.

REVISED STANDARD PLAN RSP ES-4C

Dist	COUNTY	ROUTE	POST MILES TOTAL PROJECT	SHEET No.	TOTAL SHEETS
12	Ora	39	9.8/10.5	63	80

Theresa Gabriel
REGISTERED ELECTRICAL ENGINEER

October 30, 2015
PLANS APPROVAL DATE

REGISTERED PROFESSIONAL ENGINEER Theresa Aziz Gabriel No. E15129 Exp. 6-30-16 ELECTRICAL STATE OF CALIFORNIA

THE STATE OF CALIFORNIA OR ITS OFFICERS OR AGENTS SHALL NOT BE RESPONSIBLE FOR THE ACCURACY OR COMPLETENESS OF SCANNED COPIES OF THIS PLAN SHEET.

TO ACCOMPANY PLANS DATED 06-06-2016

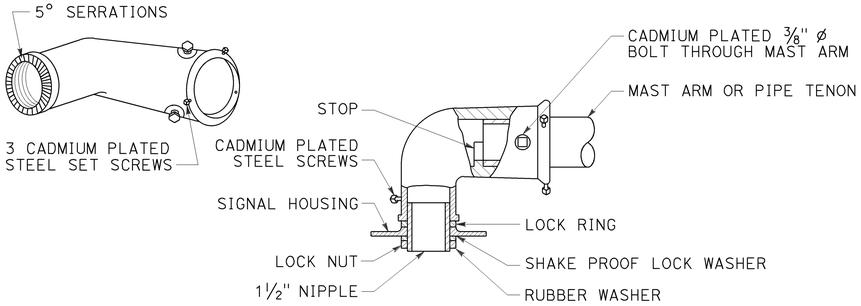

TYPE MAT
MAST ARM MOUNTING
For 2 NPS pipe, see Note 1.

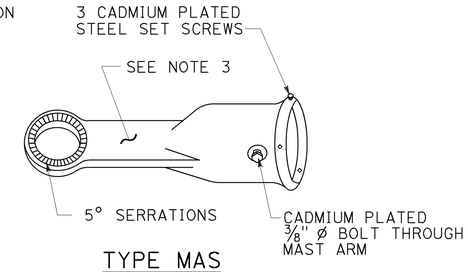

TYPE MAS
MAST ARM MOUNTING
For 2 NPS pipe, see Note 1.

SIGNAL SLIP FITTERS

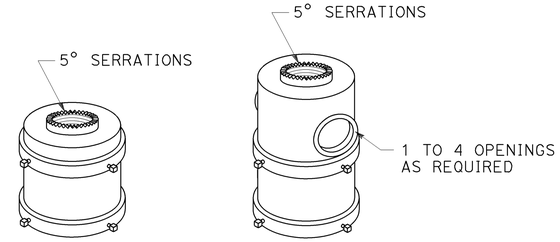

FOR ONE MOUNTING FOR MULTIPLE MOUNTINGS

TOP MOUNTINGS
For 4 NPS pipe, see Note 2.

NOTES:

1. After mast arm signal has been plumbed and secured, drill 7/16" hole through mast arm tenon in line with slip fitter hole. Place a cadmium plated 3/8" ø galvanized bolt with washer under bolt head through hole and secure with washer, nut, and locknut. Seal openings between mast arm mountings and mast arm with mastic.
2. (A) Threaded top mounted slip fitter openings shall be 1½ NPS.
   (B) Serrations in fittings shall match those on bottom of signal heads or in lock ring.
   (C) Top opening shall be offset when backplate is used.
3. Wireway shall have a cross section area of 0.95 square inch minimum. Minimum width of ½".

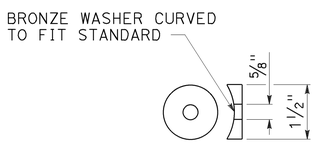

DETAIL C

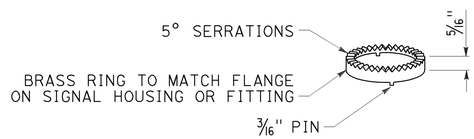

LOCK RING
Use where locking ring is not integral With signal housing or fitting.

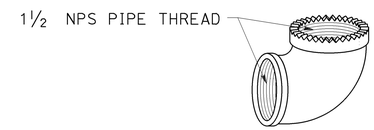

SPECIAL 90° ELBOW
One for each signal head, except those With special slip fitter mounting

MISCELLANEOUS MOUNTING HARDWARE

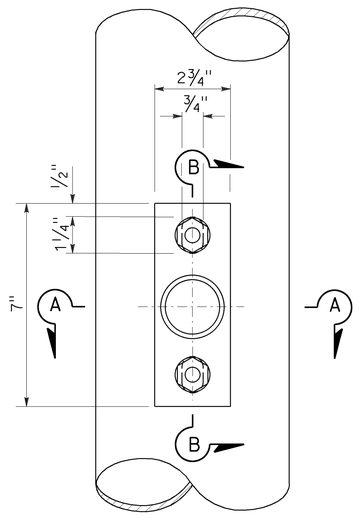

TOP VIEW

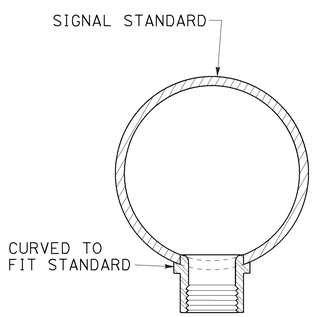

SECTION A-A

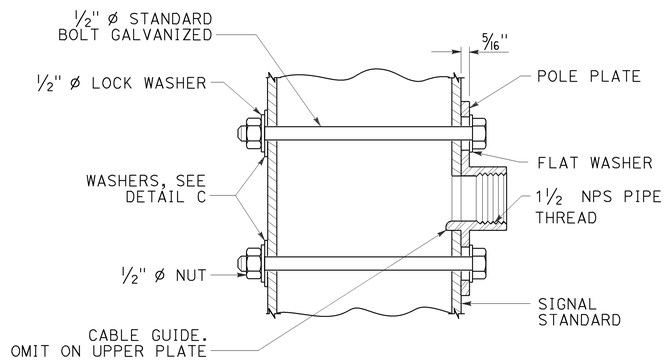

SECTION B-B

POLE PLATE FOR SIDE MOUNTED SIGNAL HEAD
WITHOUT TERMINAL COMPARTMENT

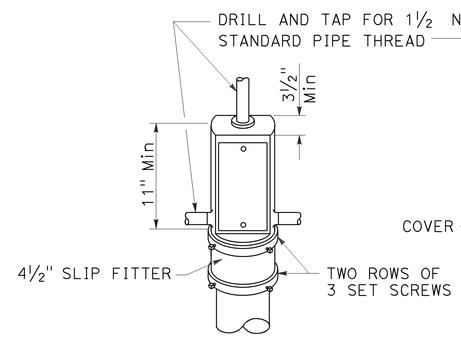

TOP MOUNTING

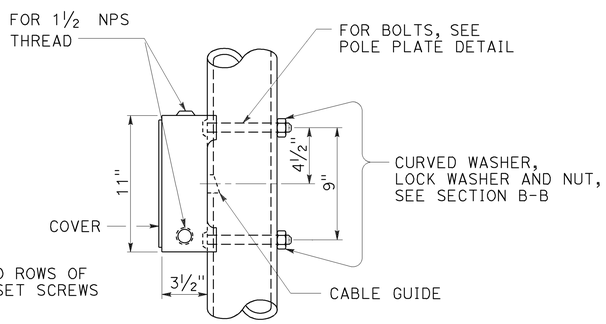

SIDE MOUNTING

TERMINAL COMPARTMENT

STATE OF CALIFORNIA
DEPARTMENT OF TRANSPORTATION

ELECTRICAL SYSTEMS (SIGNAL HEAD MOUNTING)

NO SCALE

RSP ES-4D DATED OCTOBER 30, 2015 SUPERSEDES STANDARD PLAN ES-4D DATED MAY 20, 2011 - PAGE 446 OF THE STANDARD PLANS BOOK DATED 2010.

REVISED STANDARD PLAN RSP ES-4D

2010 REVISED STANDARD PLAN RSP ES-4D

8-20-15

Dist	COUNTY	ROUTE	POST MILES TOTAL PROJECT	SHEET No.	TOTAL SHEETS
12	Ora	39	9.8/10.5	64	80

Theresa Gabriel
REGISTERED ELECTRICAL ENGINEER

October 30, 2015
PLANS APPROVAL DATE

REGISTERED PROFESSIONAL ENGINEER
Theresa Aziz Gabriel
No. E15129
Exp. 6-30-16
ELECTRICAL
STATE OF CALIFORNIA

THE STATE OF CALIFORNIA OR ITS OFFICERS OR AGENTS SHALL NOT BE RESPONSIBLE FOR THE ACCURACY OR COMPLETENESS OF SCANNED COPIES OF THIS PLAN SHEET.

TO ACCOMPANY PLANS DATED 06-06-2016

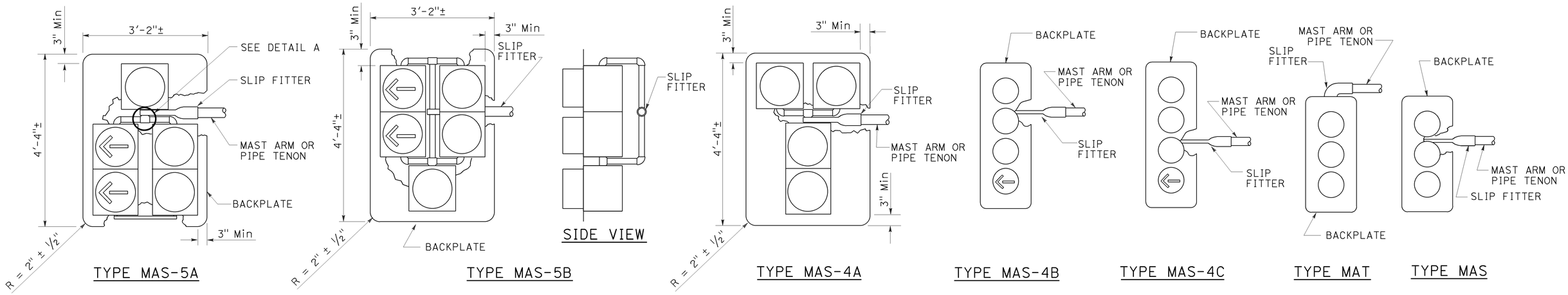

MAST ARM MOUNTINGS

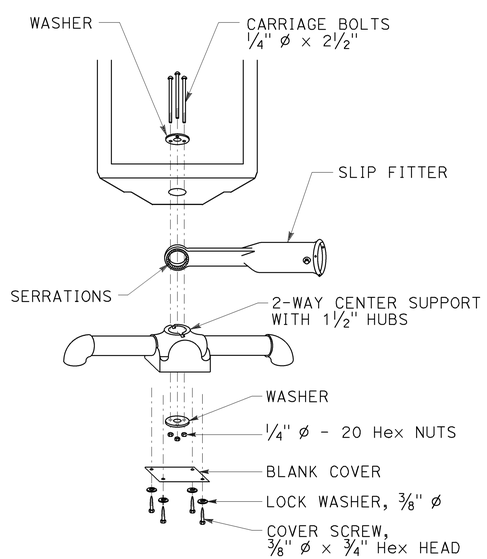

DETAIL A

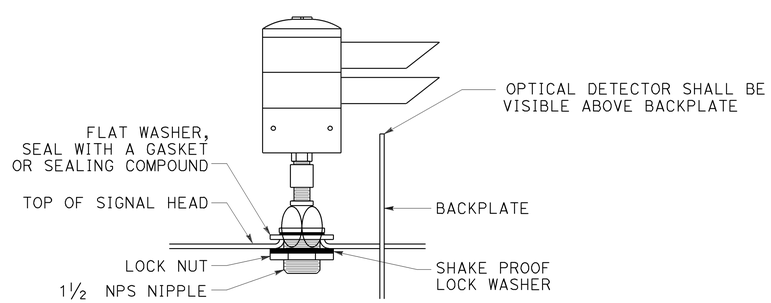

OPTICAL DETECTOR MOUNTING FOR EMERGENCY VEHICLE DETECTION

DETAIL B

STATE OF CALIFORNIA
DEPARTMENT OF TRANSPORTATION

ELECTRICAL SYSTEMS (SIGNAL HEADS AND OPTICAL DETECTOR MOUNTING)

NO SCALE

RSP ES-4E DATED OCTOBER 30, 2015 SUPERSEDES RSP ES-4E DATED JULY 19, 2013 AND STANDARD PLAN ES-4E DATED MAY 20, 2011 - PAGE 447 OF THE STANDARD PLANS BOOK DATED 2010.

REVISED STANDARD PLAN RSP ES-4E

2010 REVISED STANDARD PLAN RSP ES-4E

8-19-15

Dist	COUNTY	ROUTE	POST MILES TOTAL PROJECT	SHEET No.	TOTAL SHEETS
12	Ora	39	9.8/10.5	65	80

Theresa Gabriel
REGISTERED ELECTRICAL ENGINEER

April 15, 2016
PLANS APPROVAL DATE

REGISTERED PROFESSIONAL ENGINEER
Theresa Aziz Gabriel
No. E15129
Exp. 6-30-16
ELECTRICAL
STATE OF CALIFORNIA

THE STATE OF CALIFORNIA OR ITS OFFICERS OR AGENTS SHALL NOT BE RESPONSIBLE FOR THE ACCURACY OR COMPLETENESS OF SCANNED COPIES OF THIS PLAN SHEET.

TO ACCOMPANY PLANS DATED 06-06-2016

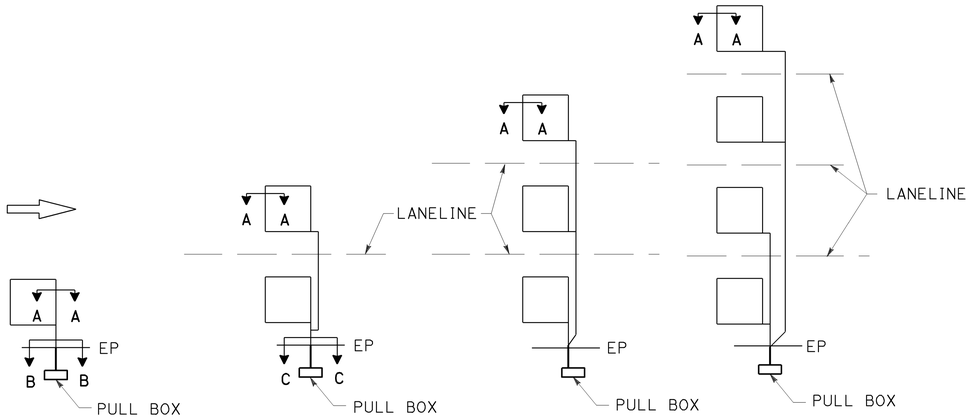

SAW CUT DETAILS

Type A loop detector configurations illustrated

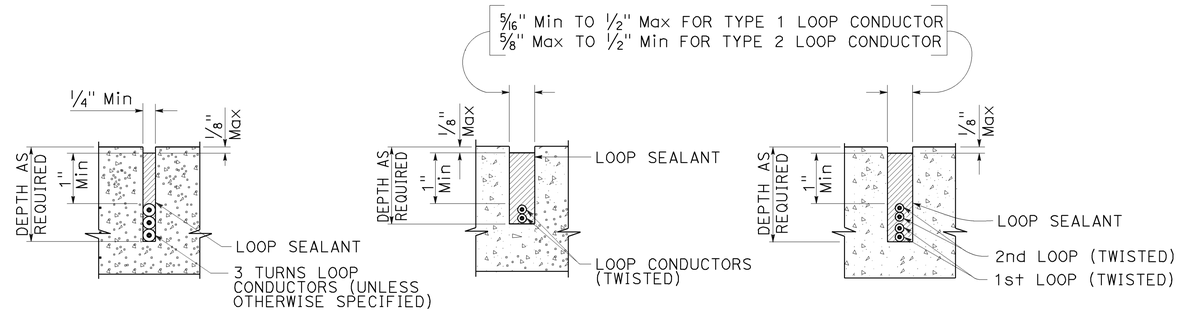

SECTION A-A SECTION B-B SECTION C-C

SLOT DETAILS - TYPE 1 AND TYPE 2 LOOP CONDUCTOR

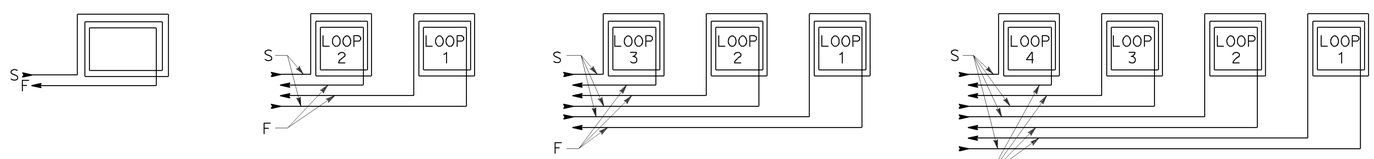

WINDING DETAILS

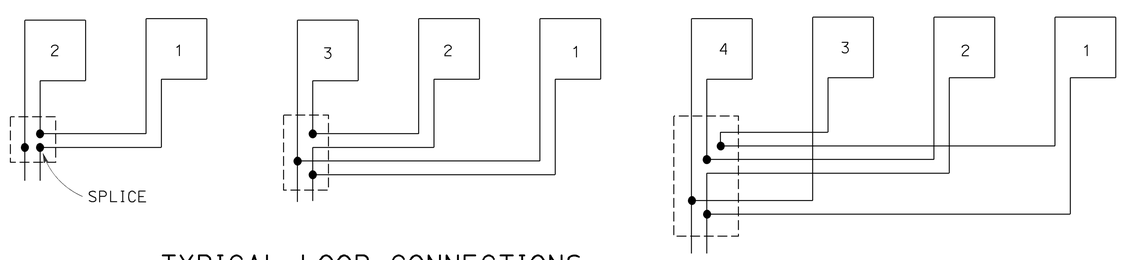

TYPICAL LOOP CONNECTIONS

Dashed lines represent the pull box

ABBREVIATIONS:

S - START
F - FINISH

STATE OF CALIFORNIA
DEPARTMENT OF TRANSPORTATION

ELECTRICAL SYSTEMS (LOOP DETECTORS)

NO SCALE

RSP ES-5A DATED APRIL 15, 2016 SUPERSEDES RSP ES-5A DATED OCTOBER 30, 2015 AND STANDARD PLAN ES-5A DATED MAY 20, 2011 - PAGE 448 OF THE STANDARD PLANS BOOK DATED 2010.

REVISED STANDARD PLAN RSP ES-5A

2010 REVISED STANDARD PLAN RSP ES-5A

1-12-16

Dist	COUNTY	ROUTE	POST MILES TOTAL PROJECT	SHEET No.	TOTAL SHEETS
12	Ora	39	9.8/10.5	66	80

Theresa Gabriel
REGISTERED ELECTRICAL ENGINEER

April 15, 2016
PLANS APPROVAL DATE

REGISTERED PROFESSIONAL ENGINEER
Theresa Aziz Gabriel
No. E15129
Exp. 6-30-16
ELECTRICAL
STATE OF CALIFORNIA

THE STATE OF CALIFORNIA OR ITS OFFICERS OR AGENTS SHALL NOT BE RESPONSIBLE FOR THE ACCURACY OR COMPLETENESS OF SCANNED COPIES OF THIS PLAN SHEET.

TO ACCOMPANY PLANS DATED 06-06-2016

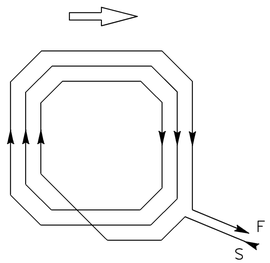

WINDING DETAIL

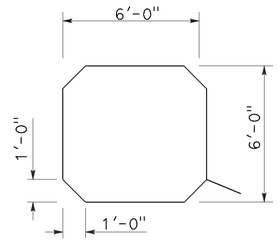

SAW CUT DETAIL

TYPE A LOOP DETECTOR CONFIGURATION

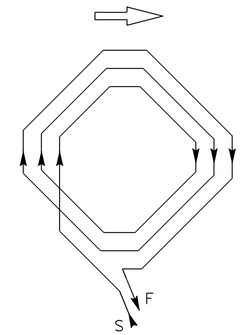

WINDING DETAIL

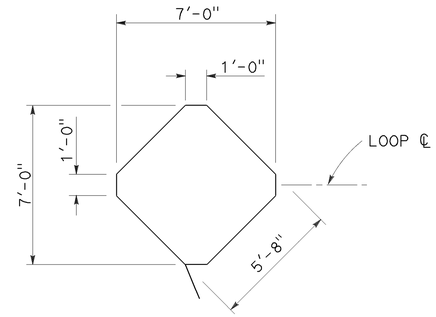

SAW CUT DETAIL

TYPE B LOOP DETECTOR CONFIGURATION

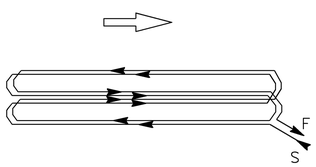

WINDING DETAIL

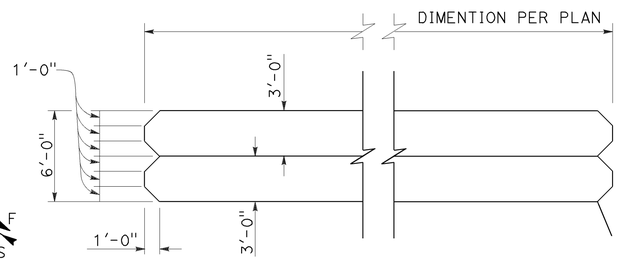

SAW CUT DETAIL

TYPE C LOOP DETECTOR CONFIGURATION

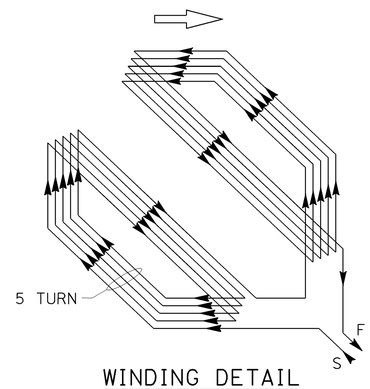

WINDING DETAIL

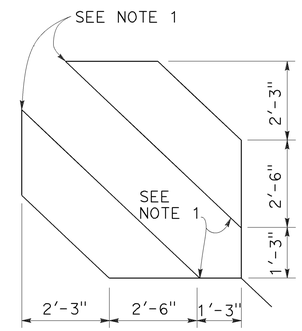

SAW CUT DETAIL

TYPE D LOOP DETECTOR CONFIGURATION

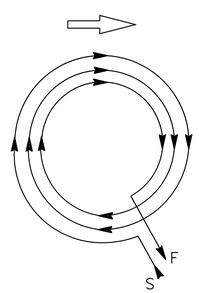

WINDING DETAIL

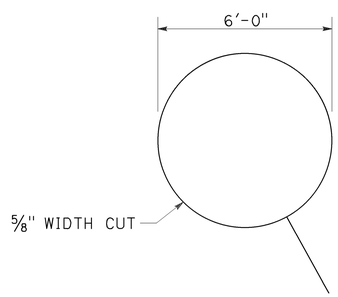

SAW CUT DETAIL

TYPE E LOOP DETECTOR CONFIGURATION

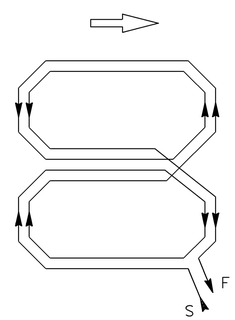

WINDING DETAIL

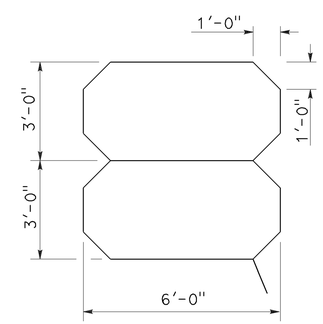

SAW CUT DETAIL

TYPE Q LOOP DETECTOR CONFIGURATION

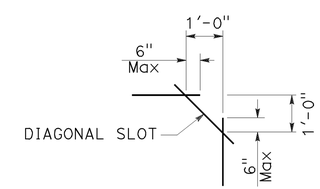

PLAN VIEW OF DIAGONAL SLOT AT CORNERS

NOTES:

1. Round corners of acute angle saw cuts to prevent damage to conductors.
2. Typical distance separating loops from edge to edge is 10′ for Type A, B, D and E installation in single lane.
3. Use Type D loops for limit line detection and bicycle lanes.

STATE OF CALIFORNIA
DEPARTMENT OF TRANSPORTATION

ELECTRICAL SYSTEMS (DETECTORS)

NO SCALE

RSP ES-5B DATED APRIL 15, 2016 SUPERSEDES RSP ES-5B DATED OCTOBER 30, 2015 AND RSP ES-5B DATED JULY 19, 2013 AND STANDARD PLAN ES-5B DATED MAY 20, 2011 - PAGE 449 OF THE STANDARD PLANS BOOK DATED 2010.

REVISED STANDARD PLAN RSP ES-5B

2010 REVISED STANDARD PLAN RSP ES-5B

1-22-16

Dist	COUNTY	ROUTE	POST MILES TOTAL PROJECT	SHEET No.	TOTAL SHEETS
12	Ora	39	9.8/10.5	67	80

Theresa Gabriel
REGISTERED ELECTRICAL ENGINEER

October 30, 2015
PLANS APPROVAL DATE

REGISTERED PROFESSIONAL ENGINEER
Theresa Aziz Gabriel
No. E15129
Exp. 6-30-16
ELECTRICAL
STATE OF CALIFORNIA

THE STATE OF CALIFORNIA OR ITS OFFICERS OR AGENTS SHALL NOT BE RESPONSIBLE FOR THE ACCURACY OR COMPLETENESS OF SCANNED COPIES OF THIS PLAN SHEET.

TO ACCOMPANY PLANS DATED 06-06-2016

2010 REVISED STANDARD PLAN RSP ES-5C

NOTES:

1. Back casting shape to fit curvature of pole.
2. Provide cover fitting for top of post, when PBA is mounted on push button assembly post.
3. Install push button on crosswalk side of standard.
4. Use R10 series regulatory signs and plaques for pedestrian and bicycle facilities.

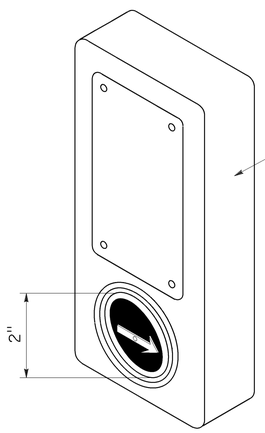

ACCESSIBLE PEDESTRIAN SIGNAL

DETAIL A

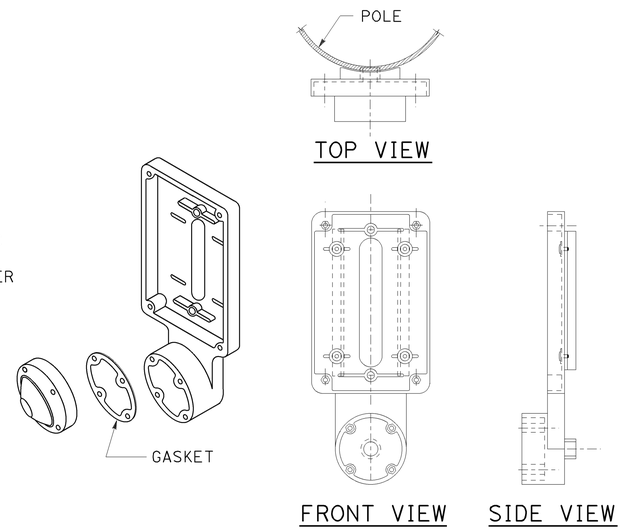

TYPE B PUSH BUTTON ASSEMBLY

DETAIL B

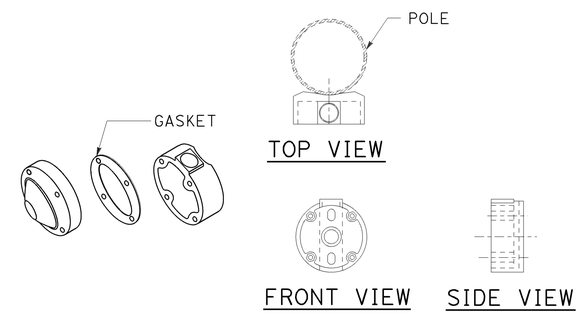

TYPE C PUSH BUTTON ASSEMBLY

DETAIL C

STATE OF CALIFORNIA
DEPARTMENT OF TRANSPORTATION

ELECTRICAL SYSTEMS (ACCESSIBLE PEDESTRIAN SIGNAL AND PUSH BUTTON ASSEMBLIES)

NO SCALE

RSP ES-5C DATED OCTOBER 30, 2015 SUPERSEDES RSP ES-5C DATED JULY 19, 2013 AND STANDARD PLAN ES-5C DATED MAY 20, 2011 - PAGE 450 OF THE STANDARD PLANS BOOK DATED 2010.

REVISED STANDARD PLAN RSP ES-5C

Dist	COUNTY	ROUTE	POST MILES TOTAL PROJECT	SHEET No.	TOTAL SHEETS
12	Ora	39	9.8/10.5	68	80

Theresa Gabriel
REGISTERED ELECTRICAL ENGINEER

October 30, 2015
PLANS APPROVAL DATE

REGISTERED PROFESSIONAL ENGINEER Theresa Aziz Gabriel No. E15129 Exp. 6-30-16 ELECTRICAL STATE OF CALIFORNIA

THE STATE OF CALIFORNIA OR ITS OFFICERS OR AGENTS SHALL NOT BE RESPONSIBLE FOR THE ACCURACY OR COMPLETENESS OF SCANNED COPIES OF THIS PLAN SHEET.

TO ACCOMPANY PLANS DATED 06-06-2016

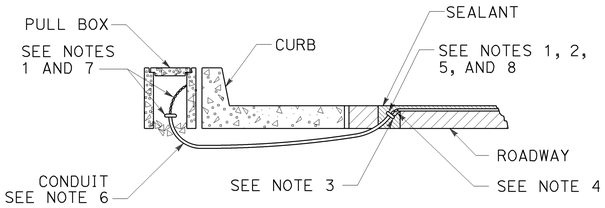

TYPE A
CURB TERMINATION DETAIL

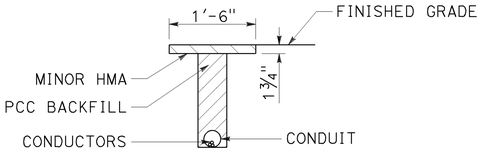

"T" TRENCH
DETAIL T

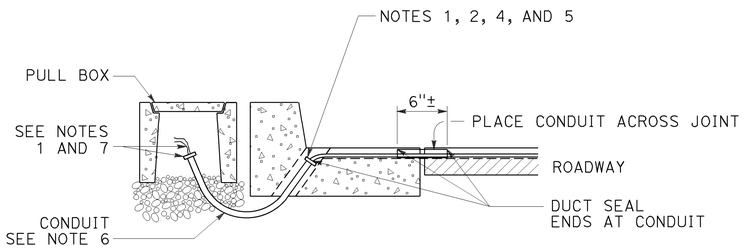

CROSS SECTION

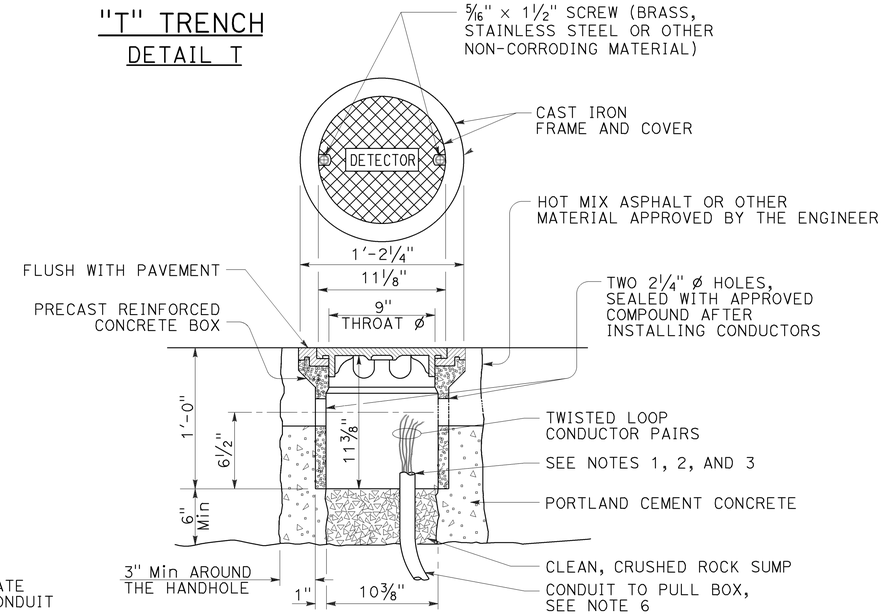

DETECTOR HANDHOLE DETAIL

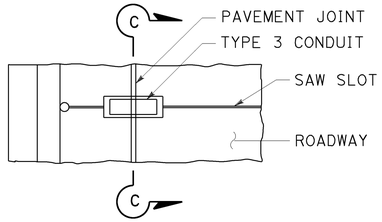

PLAN VIEW

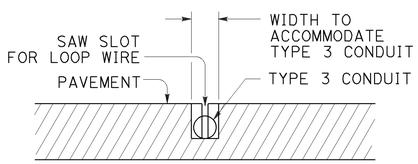

SECTION C-C

TYPE B
CURB TERMINATION DETAIL

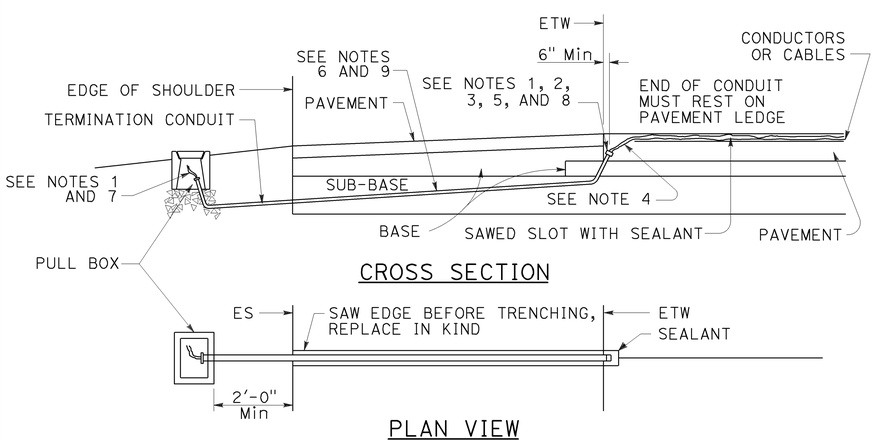

CROSS SECTION

PLAN VIEW

SHOULDER TERMINATION DETAILS

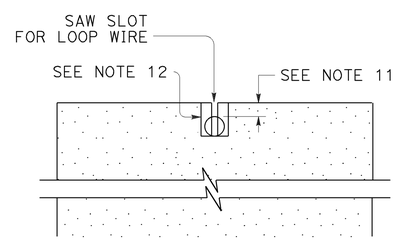

SECTION A-A

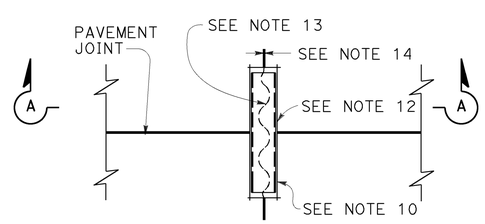

PLAN VIEW

TYPICAL LOOP LEAD-IN DETAIL AT PAVEMENT JOINT

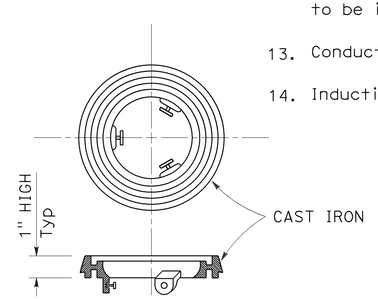

LOCKING GRADE RING

NOTES:

1. Bushing shall be used at end of conduit.
2. Tape detector conductors or cables 3" each side of bushings.
3. Install duct seal compound to each end of termination conduit before installing sealant.
4. Round all sharp edges where detector conductors or cables have to pass.
5. End of conduit shall be 3⅛" below roadway surface.
6.

Conduit size	Loop conductors
1"C minimum	1 to 2 pairs
1½"C minimum	3 to 4 pairs
2"C minimum	5 or more pairs

7. Splice detector conductors or cables to detector lead-in-cable.
8. Location of detector handhole when shown on plans.
9. When the shoulder and traveled way are paved with the same material and there is no joint between them, the conduit shall extend only 2'-0" into the shoulder pavement.
10. ¾"C, Type 3 conduit 6" long minimum, plug both ends with duct compound to keep out sealant.
11. ½" Minimum between top of conduit and pavement surface.
12. Sawcut shall not exceed 1" in width and ⅛" longer than conduit to be installed.
13. Conductors with ½" minimum slack inside conduit.
14. Inductive loop detector saw slot.

STATE OF CALIFORNIA
DEPARTMENT OF TRANSPORTATION

ELECTRICAL SYSTEMS (CURB AND SHOULDER TERMINATION, TRENCH, AND HANDHOLE DETAILS)

NO SCALE

RSP ES-5D DATED OCTOBER 30, 2015 SUPERSEDES RSP ES-5D DATED JULY 19, 2013 AND STANDARD PLAN ES-5D DATED MAY 20, 2011 - PAGE 451 OF THE STANDARD PLANS BOOK DATED 2010.

REVISED STANDARD PLAN RSP ES-5D

2010 REVISED STANDARD PLAN RSP ES-5D

8-19-15

Dist	COUNTY	ROUTE	POST MILES TOTAL PROJECT	SHEET No.	TOTAL SHEETS
12	Ora	39	9.8/10.5	69	80

REGISTERED CIVIL ENGINEER

July 15, 2016
PLANS APPROVAL DATE

REGISTERED PROFESSIONAL ENGINEER
Stanley P. Johnson
No. C57793
Exp. 3-31-18
CIVIL
STATE OF CALIFORNIA

THE STATE OF CALIFORNIA OR ITS OFFICERS OR AGENTS SHALL NOT BE RESPONSIBLE FOR THE ACCURACY OR COMPLETENESS OF SCANNED COPIES OF THIS PLAN SHEET.

TO ACCOMPANY PLANS DATED 06-06-2016

2010 REVISED STANDARD PLAN RSP ES-7A

NOTES:

1. For additional notes, details and data for Type 15TS and Type 21TS Standards, see Revised Standard Plan RSP ES-6A.
2. Handhole shall be located on the downstream side of traffic.

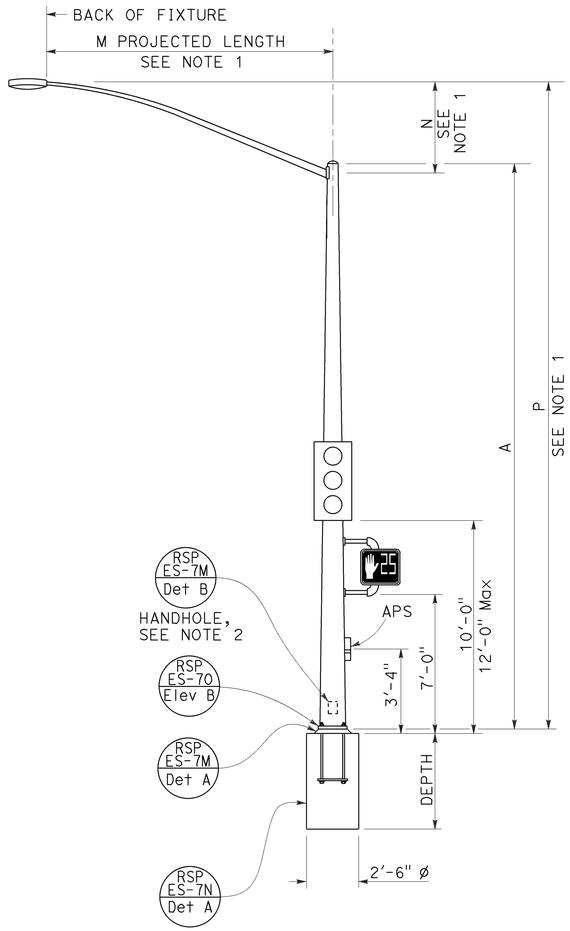

TYPE 15TS AND 21TS STANDARD

ELEVATION A

(See Note 1)

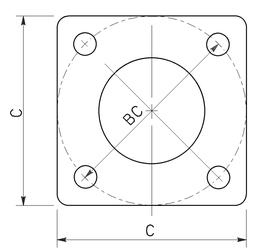

BASE PLATE

TYPE 15TS AND 21TS

DETAIL A

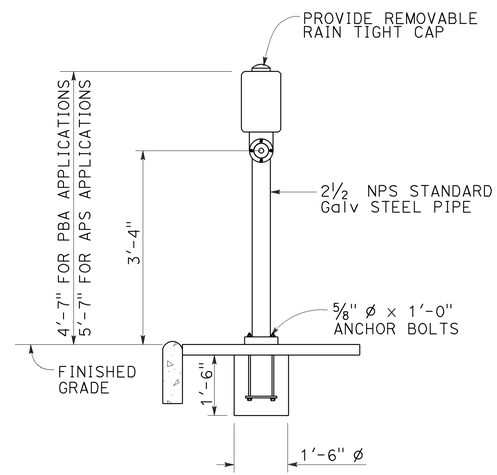

ELEVATION

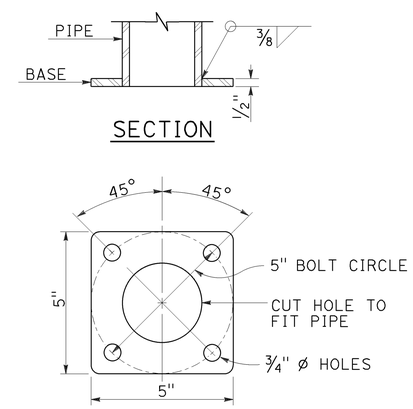

BASE PLATE

PBA POST

PUSH BUTTON ASSEMBLY POST

DETAIL B

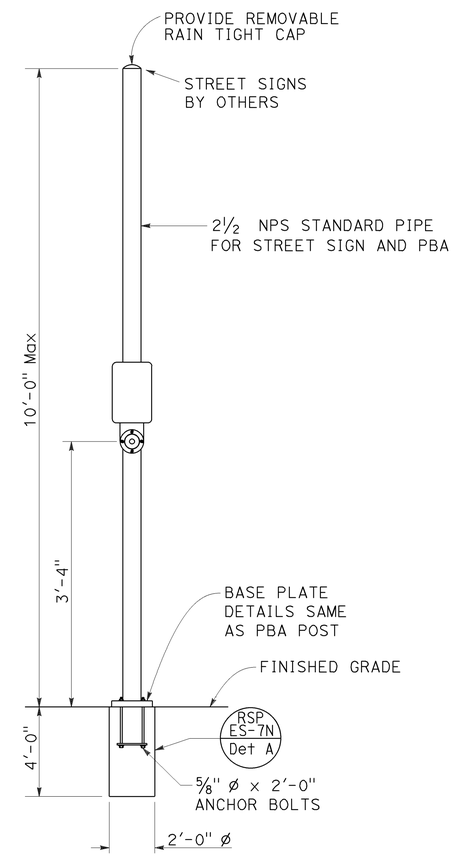

COMBINED STREET SIGN
PUSH BUTTON ASSEMBLY POST

DETAIL C

POLE TYPE	POLE DATA				BASE PLATE DATA				CIDH
	A HEIGHT	Min OD BASE	Min OD TOP	WALL THICKNESS	C	BC = BOLT CIRCLE	THICKNESS	ANCHOR BOLT SIZE	DEPTH
15TS	30'-0"	8"	3 11/16"	0.1793"	1'-1½"	1'-0"	2"	1½" ø x 42"	7'-6"
21TS	35'-0"	9⅜"	3 9/16"		1'-3"	1'-2"			8'-6"

STATE OF CALIFORNIA
DEPARTMENT OF TRANSPORTATION

ELECTRICAL SYSTEMS (SIGNAL AND LIGHTING STANDARD, TYPE TS, AND PUSH BUTTON ASSEMBLY POST)

NO SCALE

RSP ES-7A DATED JULY 15, 2016 SUPERSEDES RSP ES-7A
DATED OCTOBER 30, 2015 AND RSP ES-7A DATED JULY 19, 2013 AND
STANDARD PLAN ES-7A DATED MAY 20, 2011 - PAGE 462 OF THE STANDARD PLANS BOOK DATED 2010.

REVISED STANDARD PLAN RSP ES-7A

Dist	COUNTY	ROUTE	POST MILES TOTAL PROJECT	SHEET No.	TOTAL SHEETS
12	Ora	39	9.8/10.5	70	80

REGISTERED CIVIL ENGINEER

July 15, 2016

PLANS APPROVAL DATE

REGISTERED PROFESSIONAL ENGINEER Stanley P. Johnson No. C57793 Exp. 3-31-18 CIVIL STATE OF CALIFORNIA

THE STATE OF CALIFORNIA OR ITS OFFICERS OR AGENTS SHALL NOT BE RESPONSIBLE FOR THE ACCURACY OR COMPLETENESS OF SCANNED COPIES OF THIS PLAN SHEET.

TO ACCOMPANY PLANS DATED 06-06-2016

NOTE:
Handhole shall be located on the downstream side of traffic.

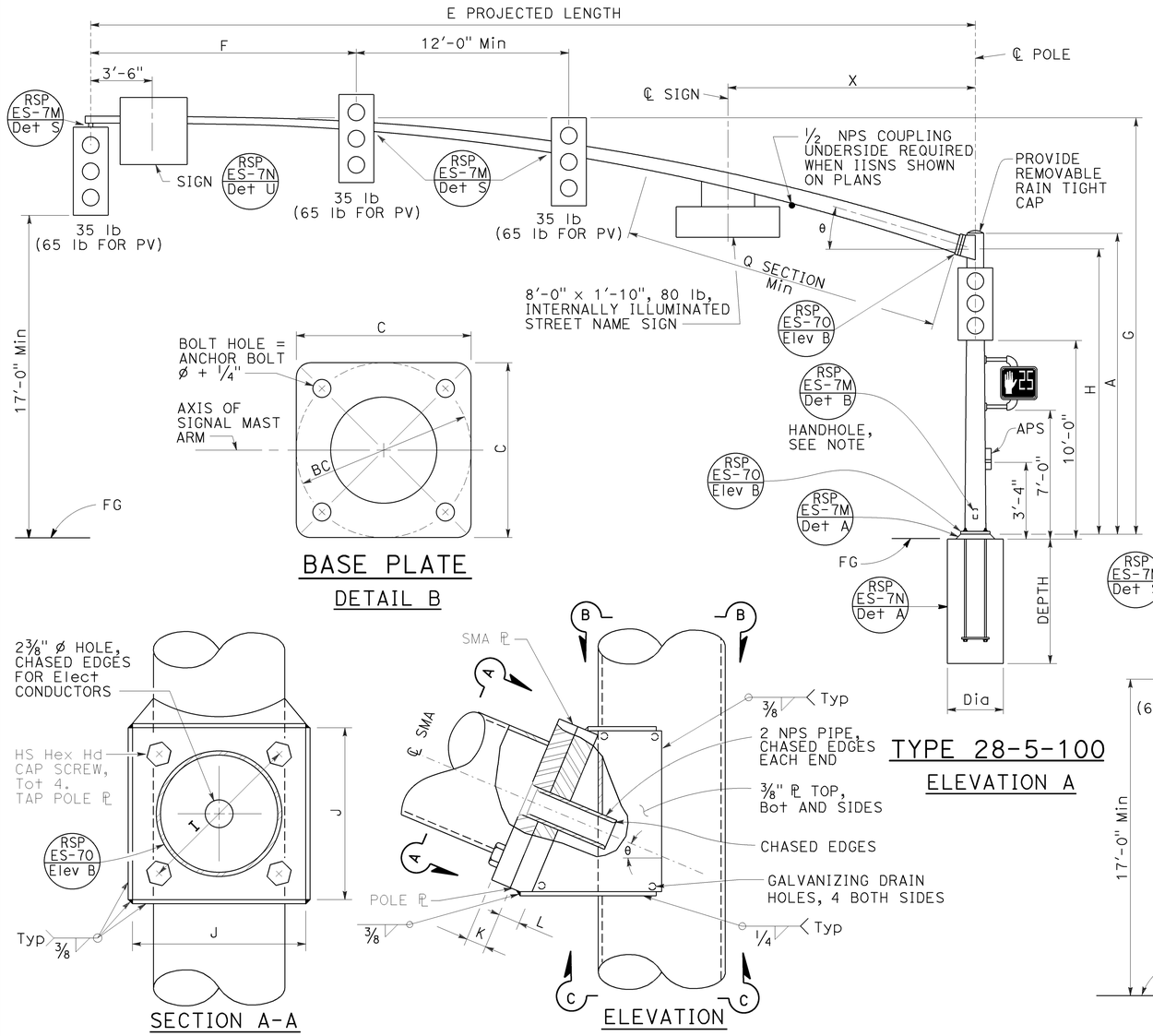

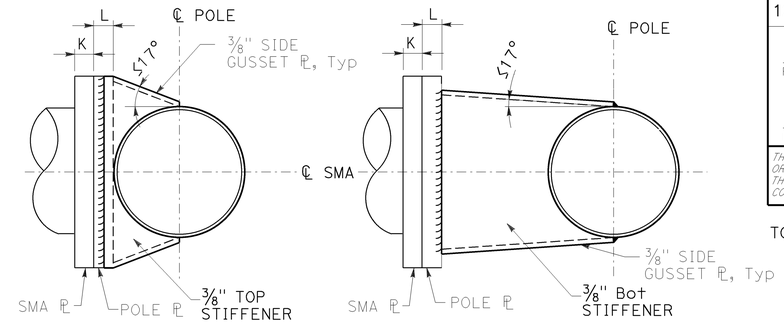

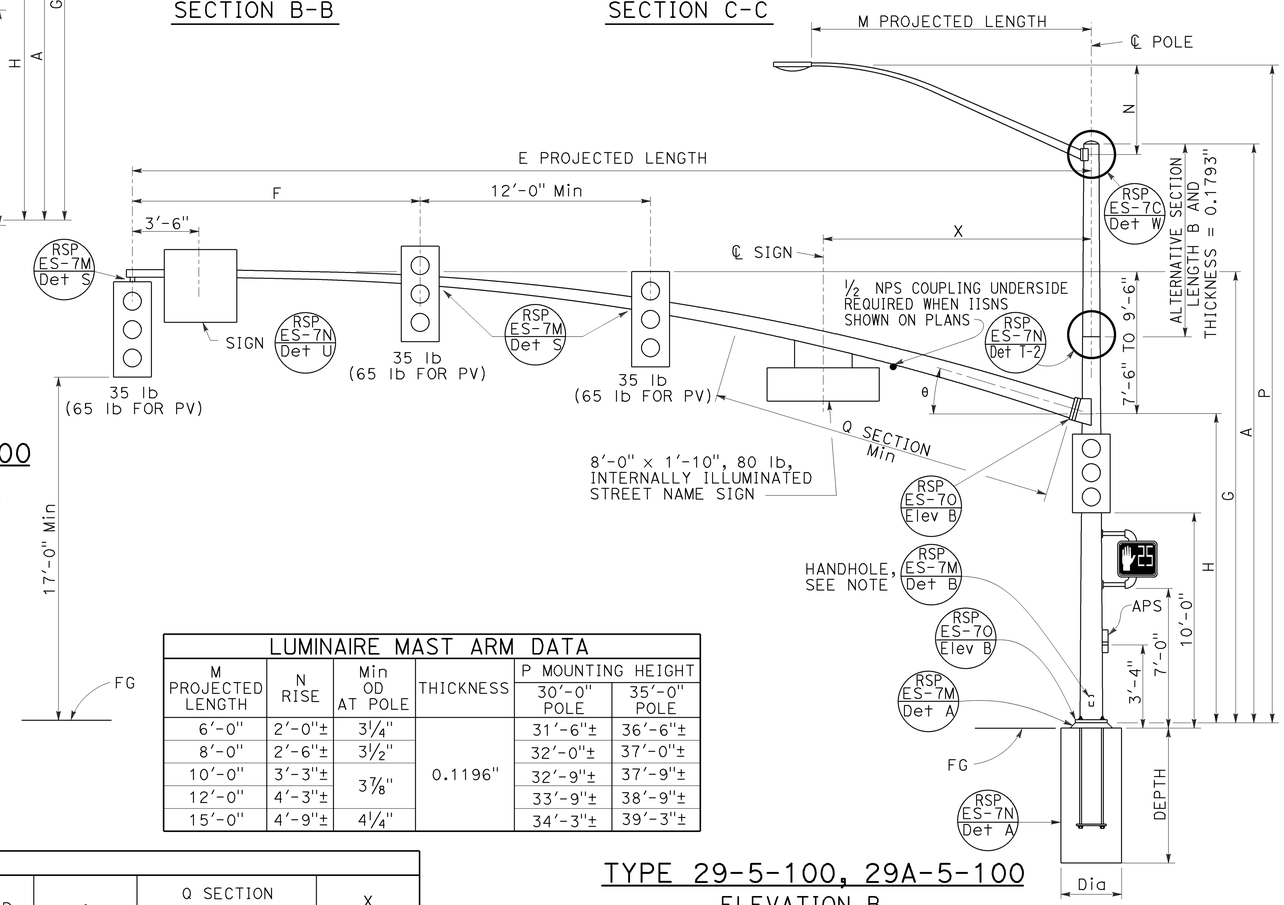

LUMINAIRE MAST ARM DATA					
M PROJECTED LENGTH	N RISE	Min OD AT POLE	THICKNESS	P MOUNTING HEIGHT 30'-0" POLE	P MOUNTING HEIGHT 35'-0" POLE
6'-0"	2'-0"±	3¼"	0.1196"	31'-6"±	36'-6"±
8'-0"	2'-6"±	3½"		32'-0"±	37'-0"±
10'-0"	3'-3"±	3⅞"		32'-9"±	37'-9"±
12'-0"	4'-3"±			33'-9"±	38'-9"±
15'-0"	4'-9"±	4¼"		34'-3"±	39'-3"±

SIGNAL MAST ARM DATA														
E PROJECTED LENGTH	F Min SPACING	G MOUNTING HEIGHT	H	Min OD AT POLE	THICKNESS	I BOLT CIRCLE	HS CAP SCREWS	J PLATE SIZE	K MAST ARM ℄ THICKNESS	L POLE ℄ THICKNESS	θ	Q SECTION LENGTH	Q SECTION THICKNESS	X Max
50'-0"	15'-0"	23'-7"± TO 25'-7"±	16'-0"	11 7/16"	0.1793"	16"	1½"-6NC-3¼"	1'-9"	1¾"	1¾"	15°	18'-0"	0.2391"	14'-0"
55'-0"				1'-¼"								23'-0"		

POLE TYPE	LOAD CASE	WIND VELOCITY (mph)	POLE DATA A HEIGHT	Min OD BASE	Min OD TOP	THICKNESS	ALTERNATIVE SECTION B LENGTH	ALTERNATIVE SECTION BOTTOM	ALTERNATIVE SECTION TOP	BASE PLATE DATA C	BC = BOLT CIRCLE	THICKNESS	ANCHOR BOLT SIZE	LUMINAIRE MAST ARM	SIGNAL MAST ARM	CIDH PILE FOUNDATION Dia	CIDH PILE FOUNDATION DEPTH
28-5-100	5	100	17'-0"	22"	19 5/8"	0.375"				2'-6"	2'-4"	3"	2¼"ø x 42"	NONE	50'-0", 55'-0"	4'-0"	14'-0"
29-5-100			30'-0"		17¾"		10'-0"	19⅛"	17¾"					6'-15' 15'-0"			
29A-5-100			35'-0"		17"		15'-0"		17"								

INDICATES MAST ARM LENGTH TO BE USED UNLESS OTHERWISE NOTED ON PLANS.

STATE OF CALIFORNIA
DEPARTMENT OF TRANSPORTATION

ELECTRICAL SYSTEMS (SIGNAL AND LIGHTING STANDARD, CASE 5 SIGNAL MAST ARM LOADING, WIND VELOCITY=100 MPH AND SIGNAL MAST ARM LENGTHS 50' TO 55')

NO SCALE

RSP ES-7G DATED JULY 15, 2016 SUPERSEDES RSP ES-7G DATED OCTOBER 30, 2015 AND RSP ES-7G DATED JULY 19, 2013 AND STANDARD PLAN ES-7G DATED MAY 20, 2011 - PAGE 468 OF THE STANDARD PLANS BOOK DATED 2010.

REVISED STANDARD PLAN RSP ES-7G

2010 REVISED STANDARD PLAN RSP ES-7G

6-20-16

Dist	COUNTY	ROUTE	POST MILES TOTAL PROJECT	SHEET No.	TOTAL SHEETS
12	Ora	39	9.8/10.5	71	80

REGISTERED CIVIL ENGINEER

July 15, 2016

PLANS APPROVAL DATE

REGISTERED PROFESSIONAL ENGINEER Stanley P. Johnson No. C57793 Exp. 3-31-18 CIVIL STATE OF CALIFORNIA

THE STATE OF CALIFORNIA OR ITS OFFICERS OR AGENTS SHALL NOT BE RESPONSIBLE FOR THE ACCURACY OR COMPLETENESS OF SCANNED COPIES OF THIS PLAN SHEET.

TO ACCOMPANY PLANS DATED 06-06-2016

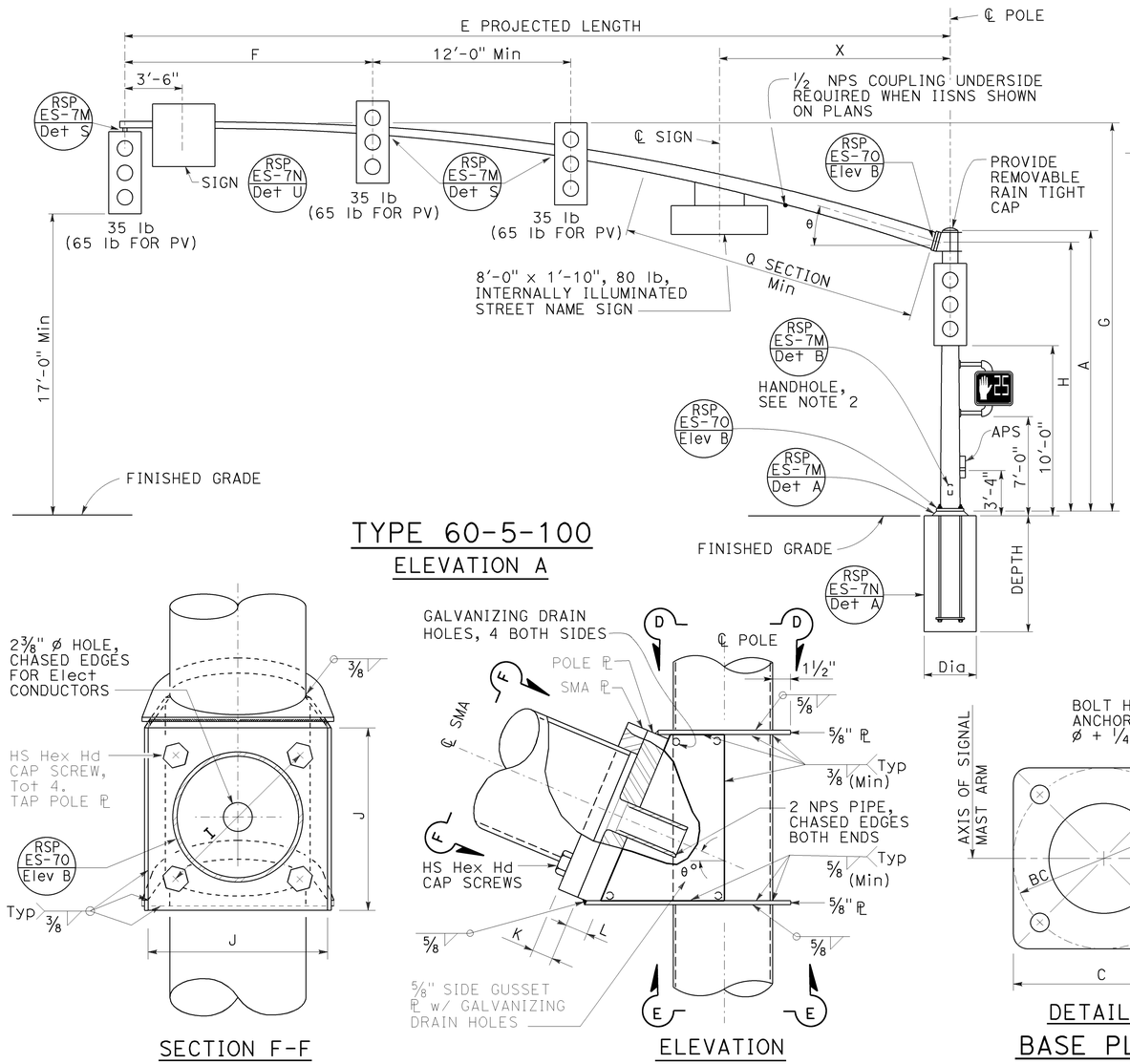

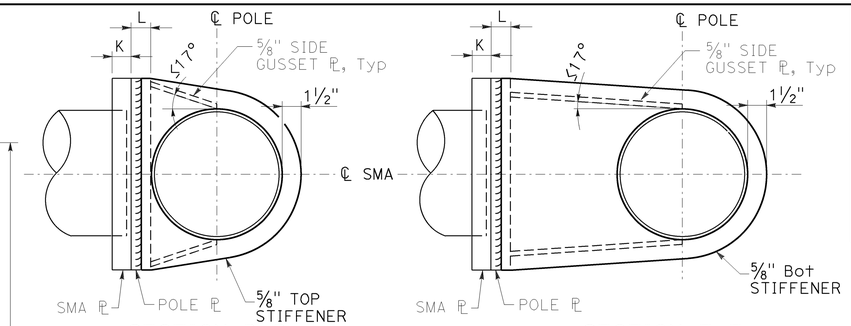

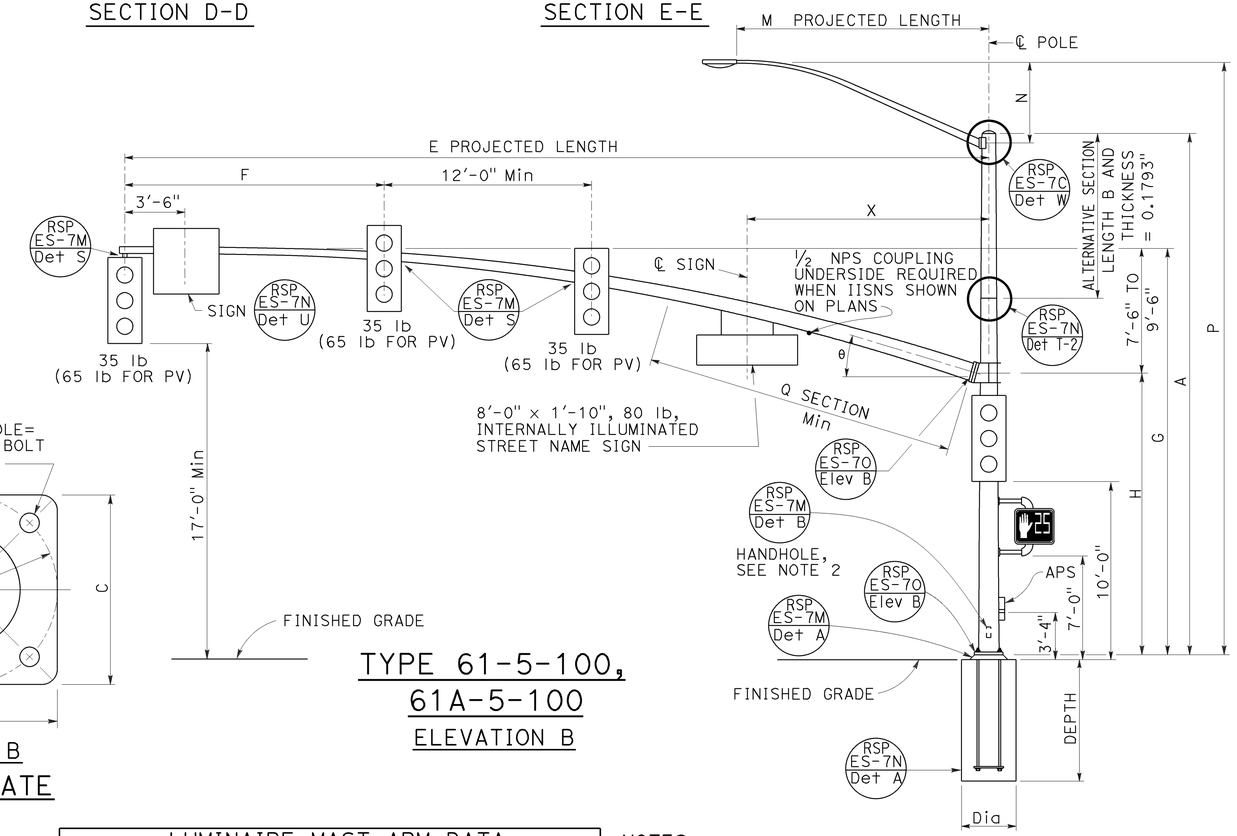

SIGNAL MAST ARM CONNECTION

DETAIL B

SIGNAL MAST ARM DATA

E PROJECTED LENGTH	F Min SPACING	G MOUNTING HEIGHT	H	Min OD AT POLE	THICKNESS	I BOLT CIRCLE	HS CAP SCREWS	J PLATE SIZE	K MAST ARM ℄ THICKNESS	L POLE ℄ THICKNESS	θ	Q SECTION LENGTH	Q SECTION THICKNESS	X Max
60'-0"	15'-0"	23'-7" TO 25'-7"	16'-0"	1'-1½"	0.1793"	20"	1½"-6NC-4"	2'-0"	2"	2"	15°	24'-0"	0.2391"	14'-0"
65'-0"					0.2391"							29'-0"	0.3125"	

LUMINAIRE MAST ARM DATA

M PROJECTED LENGTH	N RISE	Min OD AT POLE	THICKNESS	P MOUNTING HEIGHT 30'-0" POLE	P MOUNTING HEIGHT 35'-0" POLE
6'-0"	2'-0"±	3¼"	0.1196"	31'-6"±	36'-6"±
8'-0"	2'-6"±	3½"		32'-0"±	37'-0"±
10'-0"	3'-3"±	3⅞"		32'-9"±	37'-9"±
12'-0"	4'-3"±			33'-9"±	38'-9"±
15'-0"	4'-9"±	4¼"		34'-3"±	39'-3"±

POLE DATA / BASE PLATE DATA / CIDH PILE FOUNDATION

POLE TYPE	LOAD CASE	WIND VELOCITY (mph)	A HEIGHT	Min OD BASE	Min OD TOP	THICKNESS	ALTERNATIVE SECTION B LENGTH	ALTERNATIVE SECTION BOTTOM	ALTERNATIVE SECTION TOP	C	BC = BOLT CIRCLE	THICKNESS	ANCHOR BOLT SIZE	LUMINAIRE MAST ARM	SIGNAL MAST ARM	CIDH Dia	CIDH DEPTH
60-5-100	5	100	17'-0"	22"	19⅝"	0.375"				2'-6"	2'-4"	3"	2¼"ø x 42"	NONE	50'-0", 55'-0"	4'-0"	14'-0"
61-5-100			30'-0"	25"	20¾"		10'-0"	22⅛"	20¾"	2'-11"	2'-9"		3"ø x 60"	6'-15' 15'-0"		4'-6"	15'-0"
61A-5-100			35'-0"		20"		15'-0"		20"								

INDICATES MAST ARM LENGTH TO BE USED UNLESS OTHERWISE NOTED ON PLANS.

NOTES:

1. The radial separation between the face of the pole and the adjacent insides of the top and bottom gusset plates shall not exceed 3/16". Fillet weld size to be increased by amount of gap.
2. Handhole shall be located on the downstream side of traffic.

STATE OF CALIFORNIA
DEPARTMENT OF TRANSPORTATION

ELECTRICAL SYSTEMS (SIGNAL AND LIGHTING STANDARD, CASE 5 SIGNAL MAST ARM LOADING, WIND VELOCITY=100 MPH AND SIGNAL MAST ARM LENGTHS 60' TO 65')

NO SCALE

RSP ES-7H DATED JULY 15, 2016 SUPERSEDES RSP ES-7H DATED OCTOBER 30, 2015 AND RSP ES-7H DATED JULY 19, 2013 AND STANDARD PLAN ES-7H DATED MAY 20, 2011 - PAGE 469 OF THE STANDARD PLANS BOOK DATED 2010.

REVISED STANDARD PLAN RSP ES-7H

2010 REVISED STANDARD PLAN RSP ES-7H

6-20-16

Dist	COUNTY	ROUTE	POST MILES TOTAL PROJECT	SHEET No.	TOTAL SHEETS
12	Ora	39	9.8/10.5	72	80

REGISTERED CIVIL ENGINEER

July 15, 2016
PLANS APPROVAL DATE

REGISTERED PROFESSIONAL ENGINEER
Stanley P. Johnson
No. C57793
Exp. 3-31-18
CIVIL
STATE OF CALIFORNIA

THE STATE OF CALIFORNIA OR ITS OFFICERS OR AGENTS SHALL NOT BE RESPONSIBLE FOR THE ACCURACY OR COMPLETENESS OF SCANNED COPIES OF THIS PLAN SHEET.

TO ACCOMPANY PLANS DATED 06-06-2016

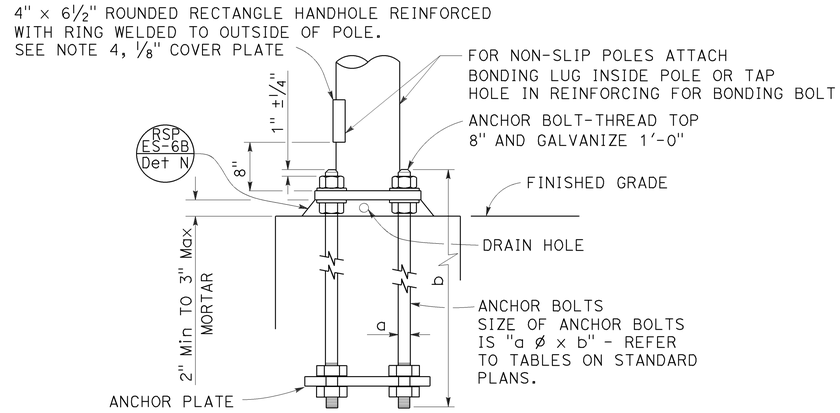

HANDHOLE AND ANCHORAGE
DETAIL A

IDENTIFICATION NUMBER

1. Attach a stamped metal tag with pole's identification number above the handhole. ¼" high number, minimum.
2. Attach a stamped metal tag with mast arm's identification number to the bottom of the signal mast arm near the pole plate. ¼" high number, minimum.

Type — Load case (Use SL for special load case) — Design wind velocity (mph) — Signal mast arm length (ft) {Near handhole: Maximum signal mast arm length for pole type; Near pole plate: Installed signal mast arm length} — Standard plan year — Only for poles or mast arms using Detail F — Only for poles or mast arms using RSP ES-7O

26A - 3 - 100 - 45 - 10 - F or FB

SAMPLE IDENTIFICATION NUMBER

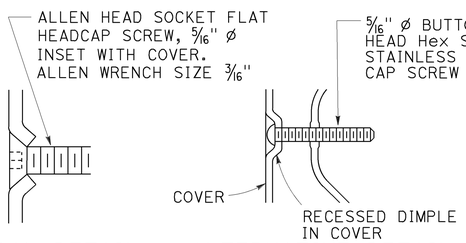

TYPICAL DETAIL
DETAIL B-1

ALTERNATIVE DETAIL
DETAIL B-2

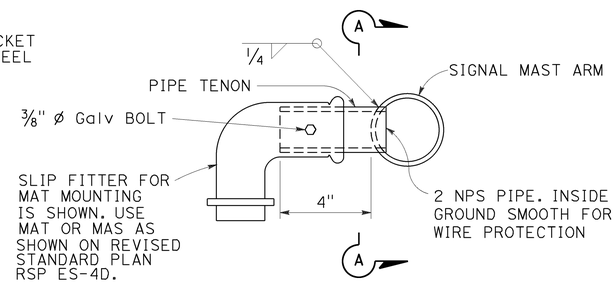

SIDE TENON
DETAIL S-1

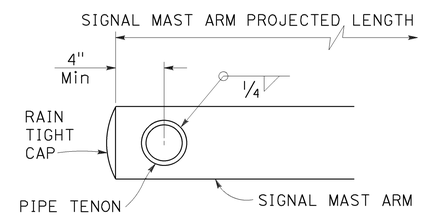

SECTION A-A

PIPE TENONS
DETAIL S

NOTES:

1. Provide a Hex nut, leveling nut and 2 washers for each bolt.
2. Luminaire mast arms shall be round, tapered steel tubes, taper of 0.1375" to 0.143-inch per foot with an end section 2⅜" OD for mounting hardware. Extensions of 2 NPS Standard pipe and 7" long may be used at the option of the manufacturer. When low pressure sodium luminaires are required, the extension shall be 1'-3".
3. Signal mast arms shall be round, tapered steel tubes, maximum taper 0.143-inch per foot.
4. Handhole reinforcement ring shall be ¼" x 2" for 0.1196" to 0.2391" thick poles, ⅜" x 2" for 0.3125" to 0.375" thick poles.
5. Handholes shall be located on the downstream side of traffic.
6. Detail F, fatigue resistant weld, is required at socket welded signal mast arm plate and pole base plate.
7. Cap screws shall be tightened by the turn-of-nut method ⅓ turn from a snug tight condition. No washer will be required.
8. Outside diameter, wall thickness, and corresponding section properties of poles and mast arms as shown in the Standard Plans are minimums. Unless otherwise specified, alternative sections shall require approval by the Engineer.
9. Design: AASHTO Standard Specifications for Structural Support for Highway Signs, Luminaires, and Traffic Signals, 6th Edition. Basic Wind Speed = 100 mph (3 seconds gust). Yearly Mean Wind Velocity = 15.6 mph.
10. Materials (Structural steel):
    fy = 55,000 psi (tapered steel tube and anchor bolts)
    fy = 50,000 psi (unless otherwise noted)
11. Materials (Reinforced concrete):
    f'c = 3,625 psi
    fy = 60,000 psi

WELD SIZE	WALL THICKNESS
3/16"	0.1196"
¼"	0.1793"
5/16"	0.2391"
⅜"	0.3125"
7/16"	0.375"

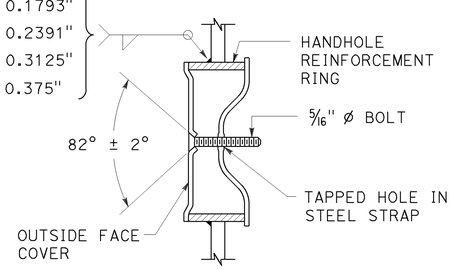

TAMPER RESISTANT HANDHOLE COVER
DETAIL B

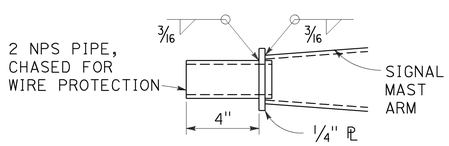

TIP TENON
DETAIL TL

This detail supersedes Detail S when so designated

WELD SIZE	WALL THICKNESS
⅛"	0.1196"
3/16"	0.1793"
¼"	0.2391"

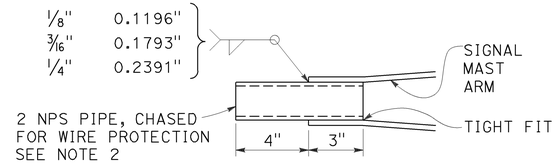

TIP TENON
DETAIL TS

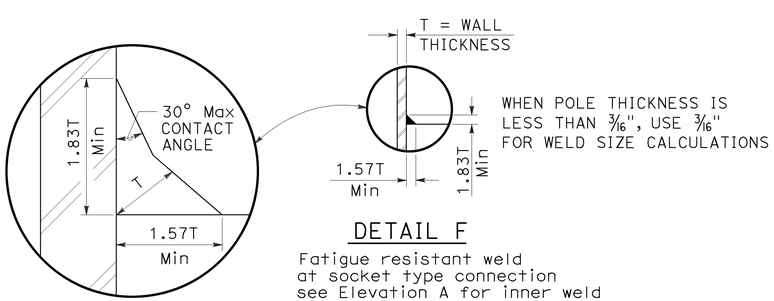

DETAIL F

Fatigue resistant weld at socket type connection see Elevation A for inner weld

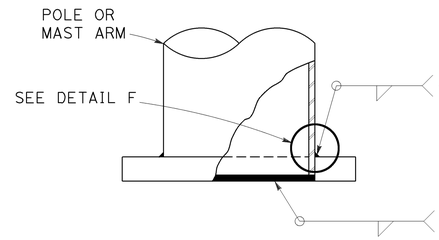

WELD SIZE	WALL THICKNESS
¼"	0.1196"
5/16"	0.1793"
⅜"	0.2391"
7/16"	0.3125"

⅛"	0.1196"
3/16"	0.1793"
¼"	0.2391"
5/16"	0.3125"

ELEVATION A

STATE OF CALIFORNIA
DEPARTMENT OF TRANSPORTATION

ELECTRICAL SYSTEMS (SIGNAL AND LIGHTING STANDARD, DETAIL No. 1)

NO SCALE

RSP ES-7M DATED JULY 15, 2016 SUPERSEDES RSP ES-7M DATED OCTOBER 30, 2015 AND STANDARD PLAN ES-7M DATED MAY 20, 2011 - PAGE 474 OF THE STANDARD PLANS BOOK DATED 2010.

REVISED STANDARD PLAN RSP ES-7M

2010 REVISED STANDARD PLAN RSP ES-7M

6-20-16

Dist	COUNTY	ROUTE	POST MILES TOTAL PROJECT	SHEET No.	TOTAL SHEETS
12	Ora	39	9.8/10.5	73	80

REGISTERED CIVIL ENGINEER

July 15, 2016
PLANS APPROVAL DATE

REGISTERED PROFESSIONAL ENGINEER
Stanley P. Johnson
No. C57793
Exp. 3-31-18
CIVIL
STATE OF CALIFORNIA

THE STATE OF CALIFORNIA OR ITS OFFICERS OR AGENTS SHALL NOT BE RESPONSIBLE FOR THE ACCURACY OR COMPLETENESS OF SCANNED COPIES OF THIS PLAN SHEET.

TO ACCOMPANY PLANS DATED 06-06-2016

2010 REVISED STANDARD PLAN RSP ES-7N

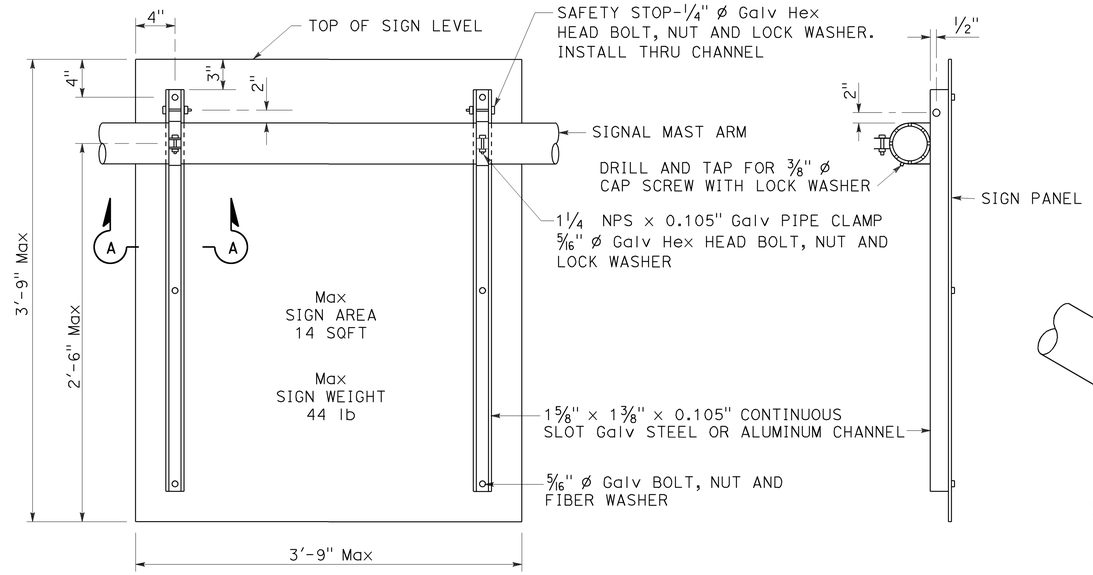

REAR VIEW

SIDE VIEW

SIGN MOUNTING DETAILS
DETAIL U

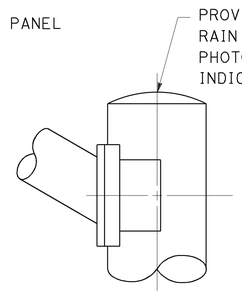

STANDARD TOP
DETAIL B-1

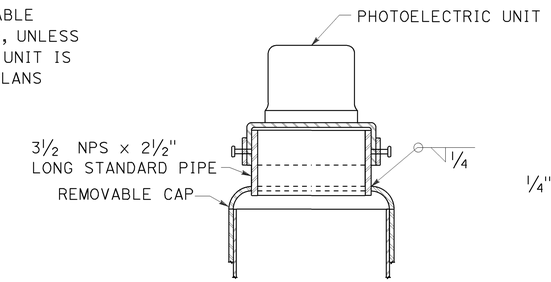

MOUNTING ADAPTER FOR
PHOTOELECTRIC UNIT
DETAIL B-2

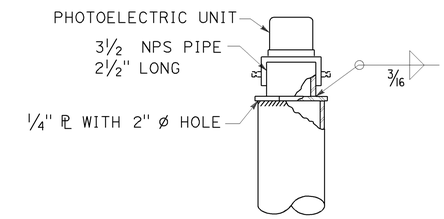

ALTERNATIVE
MOUNTING ADAPTER
DETAIL B-3

POLE TOP DETAILS
DETAIL B

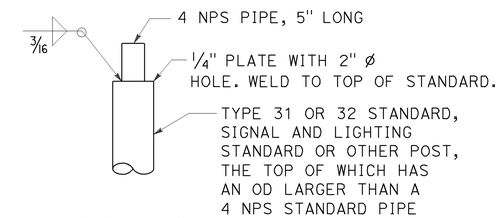

DETAIL C-1

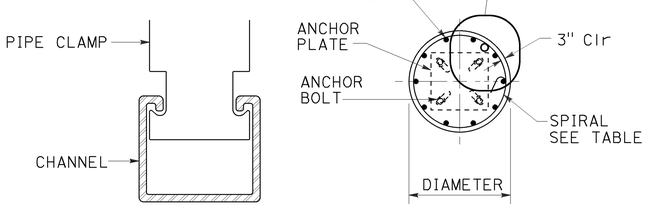

SECTION A-A

SECTION B-B

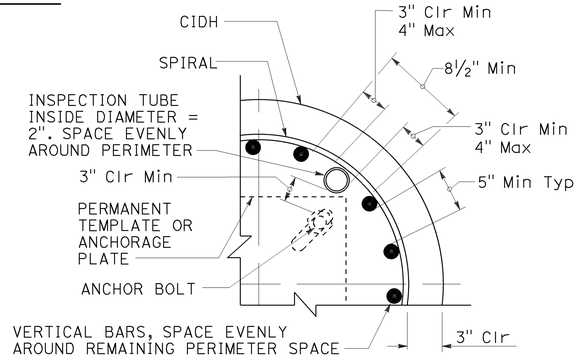

INSPECTION TUBE PLACEMENT
DETAIL I

CIDH REINFORCING AND INSPECTION TUBE SCHEDULE			
CIDH DIAMETER	VERTICAL BARS	SPIRAL	INSPECTION TUBE
2 ft	8-#5	#4 AT 6	2
2.5 ft	10-#6	#5 AT 6	4*
3 ft	12-#7		
3.5 ft	14-#8		4
4 ft	18-#9	2-#4 AT 7	5
4.5 ft	18-#9	2-#5 AT 7	5
5 ft	22-#10	2-#5 AT 7	6
6 ft	26-#11	2-#6 AT 7	7

* FOR SLIP BASE VERSIONS WITH 3 ANCHOR BOLTS USE 3 INSPECTION TUBES.

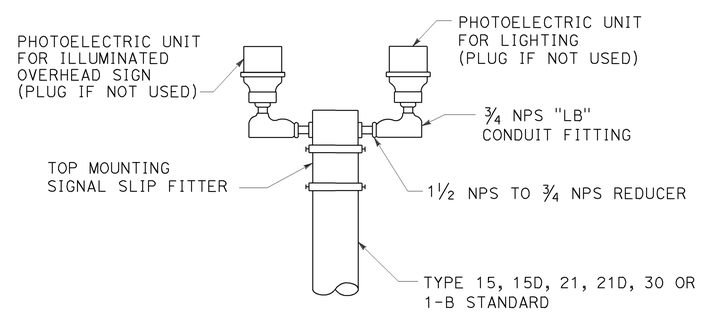

DETAIL C-2

DUAL PHOTOELECTRIC UNIT MOUNTING DETAIL
DETAIL C

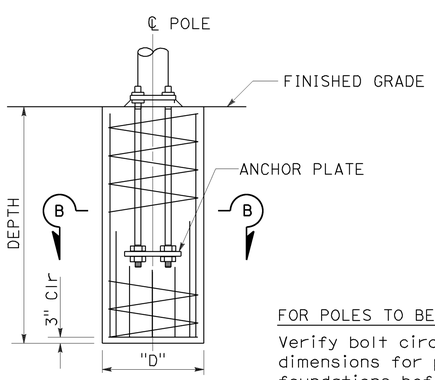

ELEVATION

FOR POLES TO BE INSTALLED ON EXISTING FOUNDATION:

Verify bolt circles, anchor bolt sizes and dependent dimensions for poles to be installed on existing foundations before fabricating the poles.

CAST-IN-DRILLED-HOLE PILE FOUNDATION, REINFORCED PILE
DETAIL A

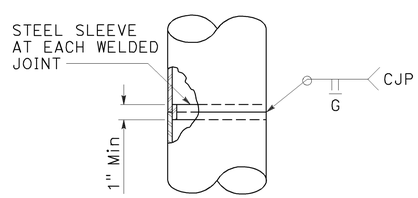

FOR UNIFORM TUBE THICKNESS
DETAIL T-1

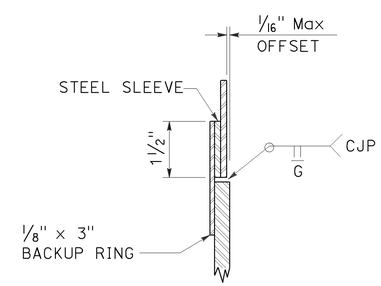

AT TUBE THICKNESS CHANGE
DETAIL T-2

POLE SPLICES
DETAIL T

STATE OF CALIFORNIA
DEPARTMENT OF TRANSPORTATION

ELECTRICAL SYSTEMS (SIGNAL AND LIGHTING STANDARD, DETAIL No. 2)

NO SCALE

RSP ES-7N DATED JULY 15, 2016 SUPERSEDES RSP ES-7N DATED OCTOBER 30, 2015 AND STANDARD PLAN ES-7N DATED MAY 20, 2011 - PAGE 475 OF THE STANDARD PLANS BOOK DATED 2010.

REVISED STANDARD PLAN RSP ES-7N

6-20-16

Dist	COUNTY	ROUTE	POST MILES TOTAL PROJECT	SHEET No.	TOTAL SHEETS
12	Ora	39	9.8/10.5	74	80

REGISTERED CIVIL ENGINEER

October 30, 2015
PLANS APPROVAL DATE

REGISTERED PROFESSIONAL ENGINEER
Stanley P. Johnson
No. C57793
Exp. 3-31-16
CIVIL
STATE OF CALIFORNIA

THE STATE OF CALIFORNIA OR ITS OFFICERS OR AGENTS SHALL NOT BE RESPONSIBLE FOR THE ACCURACY OR COMPLETENESS OF SCANNED COPIES OF THIS PLAN SHEET.

TO ACCOMPANY PLANS DATED 06-06-2016

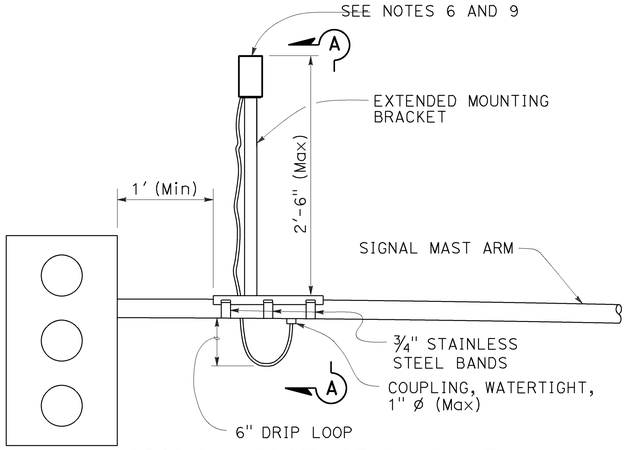

SIGNAL MAST ARM MOUNT

DETAIL A

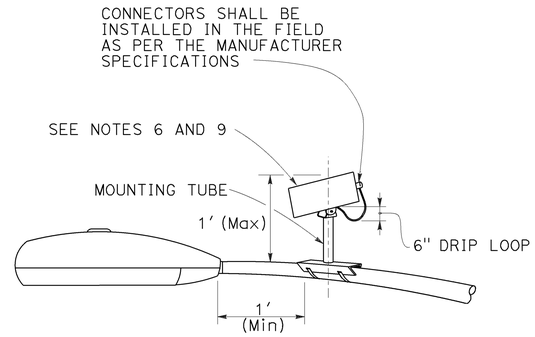

LUMINAIRE MAST ARM MOUNT

DETAIL B

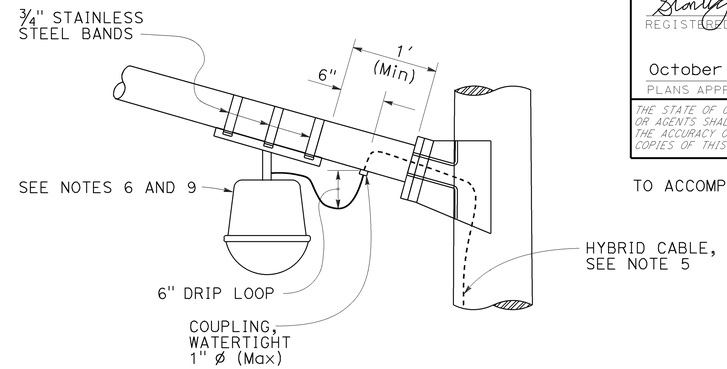

LUMINAIRE MAST ARM MOUNT

DETAIL C

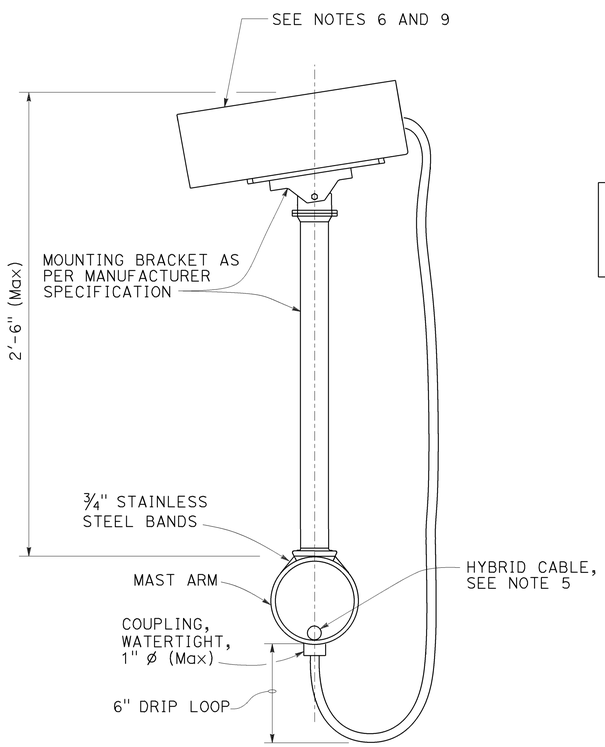

SECTION A-A

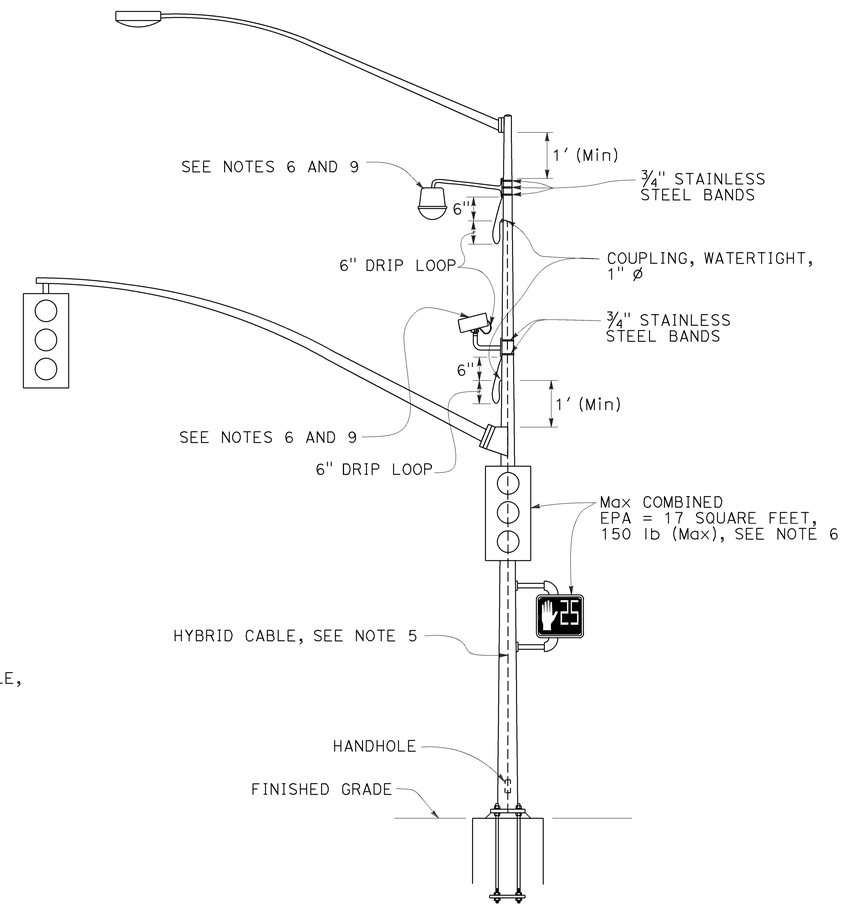

SIGNAL POLE MOUNT

DETAIL D

NOTES:

1. Exact mounting location of miscellaneous attachment and bracket shall be approved by the Engineer per manufacturer's recommendation.
2. Location of cable entrances on signal pole shall be a minimum of 1′ from any flange or base plate.
3. Hybrid cable entrances on signal pole shall be drilled for weathertight coupling as required.
4. Hybrid cable shall have a drip loop at the entrance into signal pole, luminaire mast arm and signal mast arm.
5. A single hybrid cable shall run continuous and shall not be twisted from the miscellaneous attachment to the controller cabinet. No splices shall be allowed.
6. Use the manufacturer's Effective Projected Area (EPA) for miscellaneous attachment. The maximum EPA for each miscellaneous attachment shall be 1.6 square feet with 10 lb Max.
7. Maximum of two miscellaneous attachments per traffic signal standard.
8. Maximum of one miscellaneous attachment per mast arm.
9. Miscellaneous attachment shall be mounted using clamping devices.

STATE OF CALIFORNIA
DEPARTMENT OF TRANSPORTATION

ELECTRICAL SYSTEMS (SIGNAL AND LIGHTING, MISCELLANEOUS ATTACHMENT)

NO SCALE

RSP ES-7R DATED OCTOBER 30, 2015 SUPERSEDES RSP ES-7R DATED JULY 19, 2013 AND STANDARD PLAN ES-7R DATED MAY 20, 2011 - PAGE 479 OF THE STANDARD PLANS BOOK DATED 2010.

REVISED STANDARD PLAN RSP ES-7R

2010 REVISED STANDARD PLAN RSP ES-7R

8-21-15

DIST	COUNTY	ROUTE	POST MILES TOTAL PROJECT	SHEET NO.	TOTAL SHEETS
12	Ora	39	9.8/10.5	75	80

Theresa Gabriel
REGISTERED ELECTRICAL ENGINEER

April 15, 2016
PLANS APPROVAL DATE

REGISTERED PROFESSIONAL ENGINEER Theresa Aziz Gabriel No. E15129 Exp. 6-30-16 ELECTRICAL STATE OF CALIFORNIA

THE STATE OF CALIFORNIA OR ITS OFFICERS OR AGENTS SHALL NOT BE RESPONSIBLE FOR THE ACCURACY OR COMPLETENESS OF SCANNED COPIES OF THIS PLAN SHEET.

TO ACCOMPANY PLANS DATED 06-06-2016

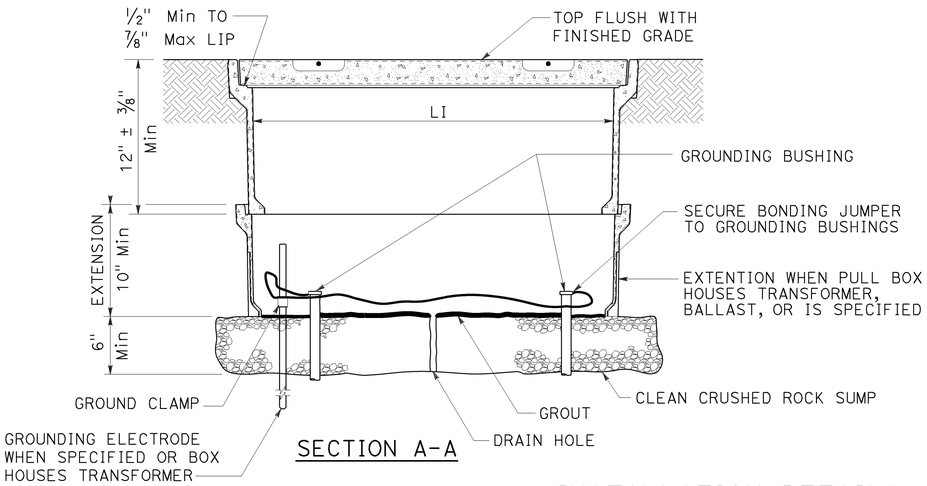

SECTION A-A

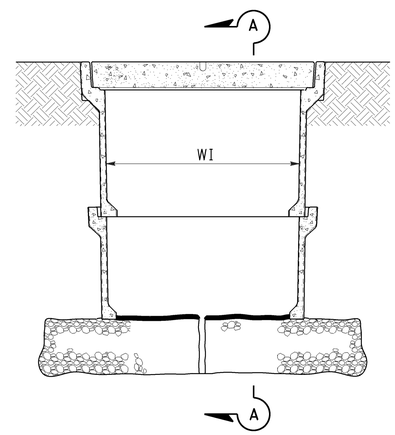

SIDE VIEW

INSTALLATION DETAILS

DETAIL A

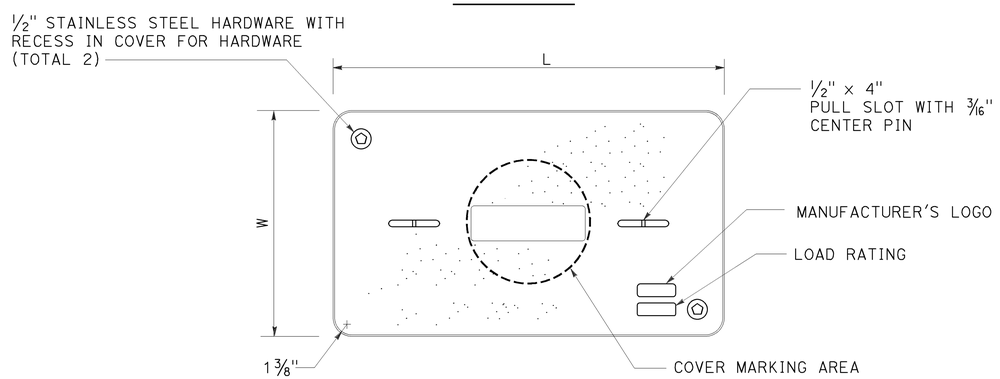

COVER TOP VIEW

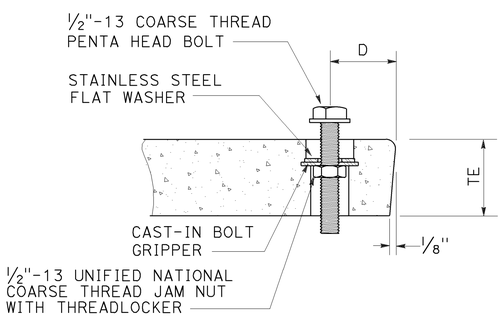

TYPICAL COVER CAPTIVE BOLT

OR SIMILAR

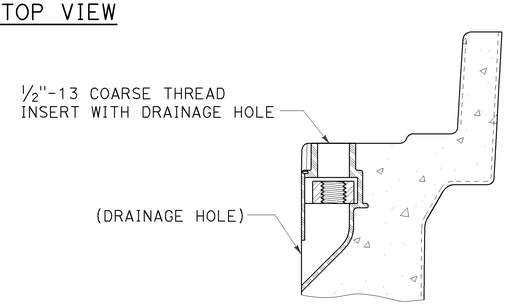

TYPICAL THREADED INSERT

OR SIMILAR

NOTES:

1. The nominal dimensions of the opening in which the cover sets shall be the same as the cover dimensions except the length and width dimensions shall be 1/8" greater.
2. Covers and boxes shall be interchangeable with California standard male and female gages. When interchanged with a standard male or female gage, the top surfaces shall be flush within 1/8". Top outside radius of covers and pull boxes shall have a 1/8" radius.
3. Dimensions for the cover for non-traffic pull box are nominal values.

DIMENSION TABLE

PULL BOX	PULL BOX					COVER				
	MINIMUM DEPTH BOX	MINIMUM DEPTH EXTENSION	MINIMUM WEIGHT	LI Min	WI Min	TE	D	L	W	MINIMUM WEIGHT
No. 3 1/2	12"	N/A	40 lb	1' - 3"	9"	1 3/4"	1 3/4"	1'-3 1/4" - 1'-3 3/8"	10" - 10 1/8"	30 lb
No. 5	12"	10"	55 lb	1' - 8"	11"	2"	1 3/4"	1'-11 1/4"	1'-1 3/4"	60 lb
No. 6	12"	10"	70 lb	2' - 4 1/4"	1' - 3 1/4"	2"	2"	2'-6 1/2"	1'-5 1/2"	85 lb

STATE OF CALIFORNIA
DEPARTMENT OF TRANSPORTATION

ELECTRICAL SYSTEMS (NON-TRAFFIC PULL BOX)

NO SCALE

RSP ES-8A DATED APRIL 15, 2016 SUPERSEDES RSP ES-8A DATED OCTOBER 30, 2015 AND RSP ES-8A DATED JULY 19, 2013 AND RSP ES-8A DATED JANUARY 20, 2012 THAT SUPPLEMENTS THE STANDARD PLANS BOOK DATED 2010.

REVISED STANDARD PLAN RSP ES-8A

2010 REVISED STANDARD PLAN RSP ES-8A

1-22-16

Dist	COUNTY	ROUTE	POST MILES TOTAL PROJECT	SHEET No.	TOTAL SHEETS
12	Ora	39	9.8/10.5	76	80

Theresa Gabriel
REGISTERED ELECTRICAL ENGINEER

October 30, 2015
PLANS APPROVAL DATE

REGISTERED PROFESSIONAL ENGINEER
Theresa Aziz Gabriel
No. E15129
Exp. 6-30-16
ELECTRICAL
STATE OF CALIFORNIA

THE STATE OF CALIFORNIA OR ITS OFFICERS OR AGENTS SHALL NOT BE RESPONSIBLE FOR THE ACCURACY OR COMPLETENESS OF SCANNED COPIES OF THIS PLAN SHEET.

TO ACCOMPANY PLANS DATED 06-06-2016

NOTE:

Curves represent the minimum footcandle (FC).

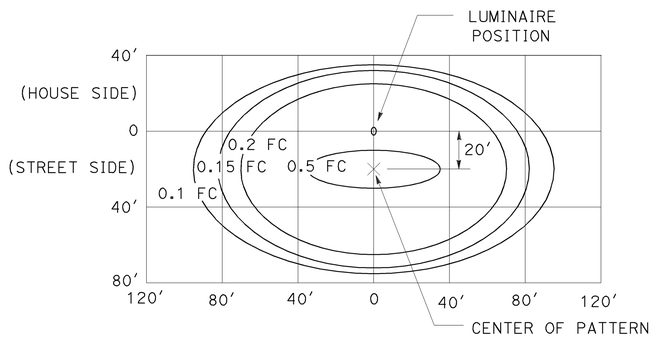

LED LUMINAIRE 165 W

34′ Mounting Height

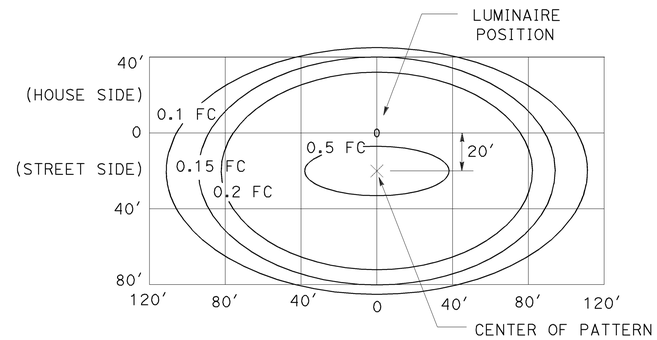

LED LUMINAIRE 235 W

40′ Mounting Height

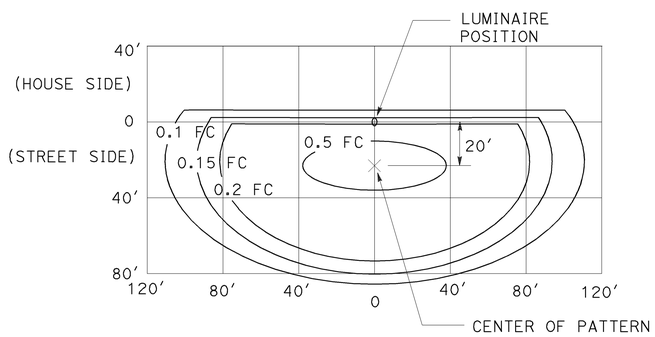

LED LUMINAIRE 235 W

40′ Mounting Height
with back side control

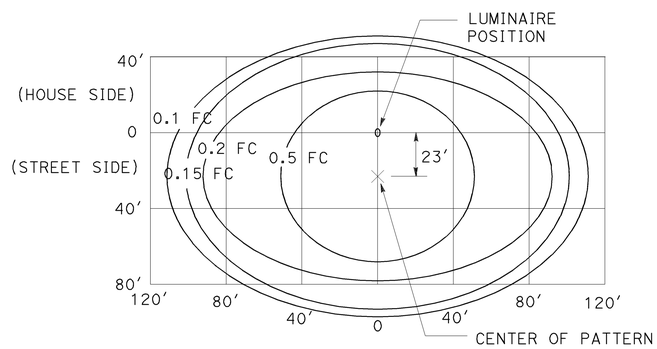

LED LUMINAIRE 300 W

40′ Mounting Height

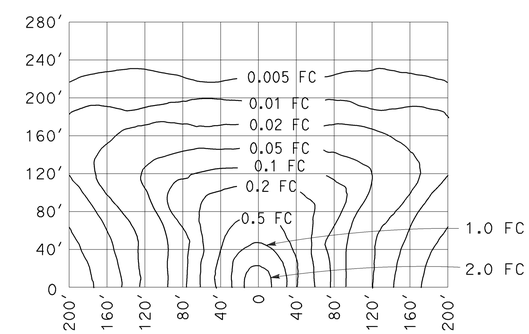

LOW-PRESSURE SODIUM LUMINAIRE 180 W

40′ Mounting Height
Lamp operated at 33,000 lm

STATE OF CALIFORNIA
DEPARTMENT OF TRANSPORTATION

ELECTRICAL SYSTEMS (ISOFOOTCANDLE CURVES)

NO SCALE

RSP ES-10A DATED OCTOBER 30, 2015 SUPERSEDES RSP ES-10A DATED JULY 19, 2013 THAT SUPPLEMENTS THE STANDARD PLANS BOOK DATED 2010.

REVISED STANDARD PLAN RSP ES-10A

2010 REVISED STANDARD PLAN RSP ES-10A

9-29-15

Dist	COUNTY	ROUTE	POST MILES TOTAL PROJECT	SHEET No.	TOTAL SHEETS
12	Ora	39	9.8/10.5	77	80

Theresa Gabriel
REGISTERED ELECTRICAL ENGINEER

October 30, 2015
PLANS APPROVAL DATE

REGISTERED PROFESSIONAL ENGINEER
Theresa Aziz Gabriel
No. E15129
Exp. 6-30-16
ELECTRICAL
STATE OF CALIFORNIA

THE STATE OF CALIFORNIA OR ITS OFFICERS OR AGENTS SHALL NOT BE RESPONSIBLE FOR THE ACCURACY OR COMPLETENESS OF SCANNED COPIES OF THIS PLAN SHEET.

TO ACCOMPANY PLANS DATED 06-06-2016

NOTE:

Curves represent the minimum footcandle (FC).

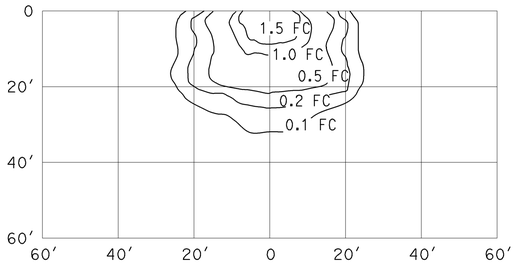

HIGH-PRESSURE SODIUM
WALL-MOUNTED LUMINAIRE 70 W

15′ Mounting Height
ANSI Designation S62
Lamp operated at 5,800 lm

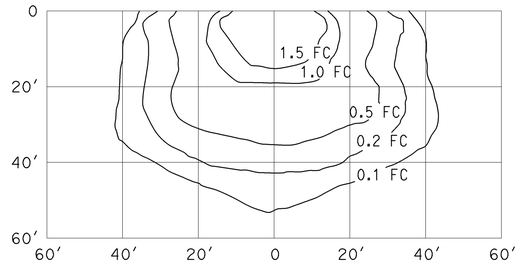

HIGH-PRESSURE SODIUM
WALL-MOUNTED LUMINAIRE 100 W

15′ Mounting Height
ANSI Designation S54
Lamp operated at 9,500 lm

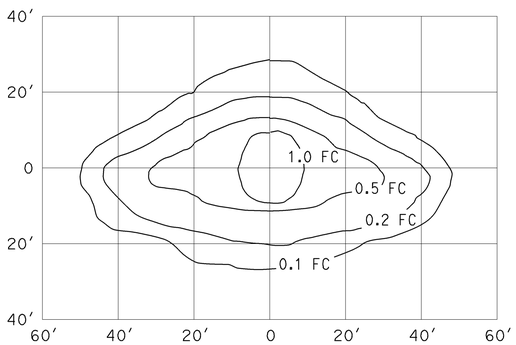

HIGH-PRESSURE SODIUM
PENDANT SOFFIT LUMINAIRE 70 W
TYPE III SHORT

17′ Mounting Height
ANSI Designation S62
Lamp operated at 5,800 lm

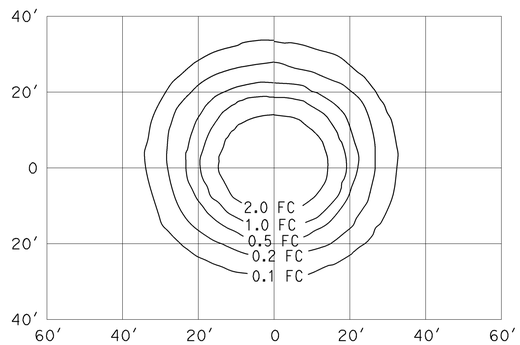

HIGH-PRESSURE SODIUM
PENDANT SOFFIT LUMINAIRE 70 W

17′ Mounting Height
ANSI Designation S62
Lamp operated at 5,800 lm

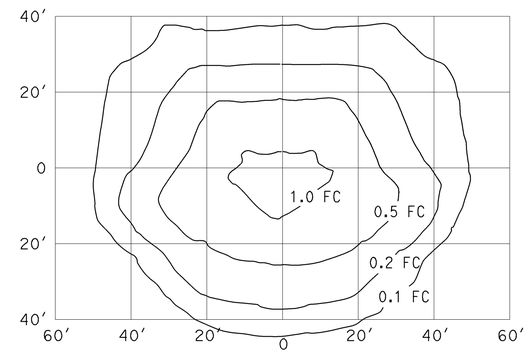

HIGH-PRESSURE SODIUM
FLUSH-MOUNTED SOFFIT LUMINAIRE 70 W

17′ Mounting Height
ANSI Designation S62
Lamp operated at 5,800 lm

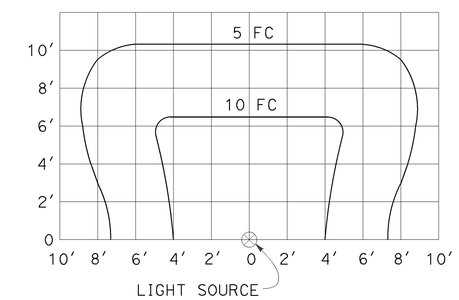

INDUCTION SIGN
LIGHTING FIXTURE 85 W

STATE OF CALIFORNIA
DEPARTMENT OF TRANSPORTATION

ELECTRICAL SYSTEMS (ISOFOOTCANDLE CURVES)

NO SCALE

RSP ES-10B DATED OCTOBER 30, 2015 SUPERSEDES RSP ES-10B DATED JULY 20, 2012 THAT SUPPLEMENTS THE STANDARD PLANS BOOK DATED 2010.

REVISED STANDARD PLAN RSP ES-10B

2010 REVISED STANDARD PLAN RSP ES-10B

Dist	COUNTY	ROUTE	POST MILES TOTAL PROJECT	SHEET No.	TOTAL SHEETS
12	Ora	39	9.8/10.5	78	80

REGISTERED CIVIL ENGINEER

July 15, 2016
PLANS APPROVAL DATE

REGISTERED PROFESSIONAL ENGINEER
Stanley P. Johnson
No. C57793
Exp. 3-31-18
CIVIL
STATE OF CALIFORNIA

THE STATE OF CALIFORNIA OR ITS OFFICERS OR AGENTS SHALL NOT BE RESPONSIBLE FOR THE ACCURACY OR COMPLETENESS OF SCANNED COPIES OF THIS PLAN SHEET.

TO ACCOMPANY PLANS DATED 06-06-2016

2010 REVISED STANDARD PLAN RSP ES-11

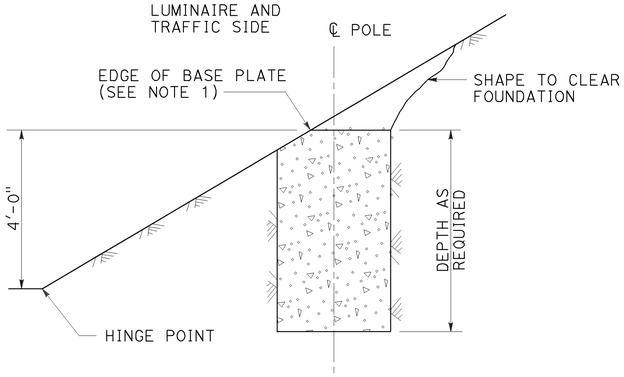

CUT SLOPES
STEEPER THAN 4:1,
LESS THAN 2:1
DETAIL A-1
See Note 2 and 3

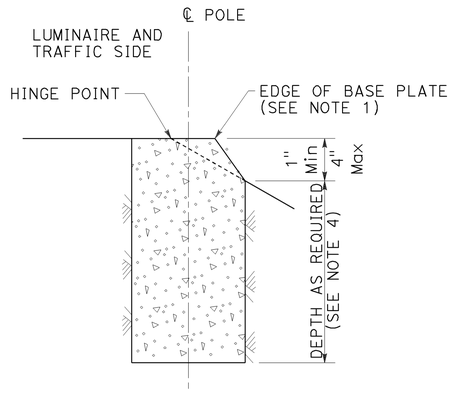

FILL SLOPES
STEEPER THAN 4:1,
LESS THAN 2:1
DETAIL A-2
See Note 2 and 3

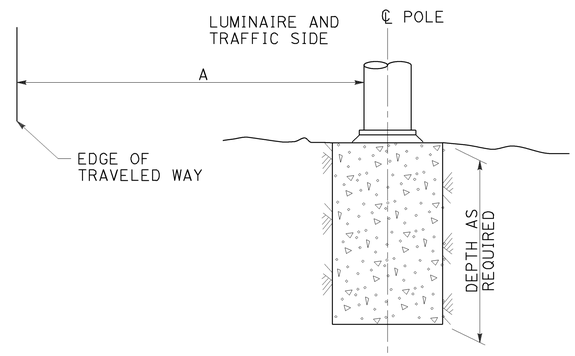

FLAT SECTIONS, CUT OR FILL SLOPES
4:1 OR FLATTER
DETAIL A-3
See Note 2

STANDARD TYPE	SETBACK (DIMENSION A)
32	30'-0" (Min)
31	20'-0" (Min)
15, 15D, 15-SB, 21, 21D, 30	ARM LENGTH (Min)

FOUNDATIONS ADJACENT TO ALL ROADWAYS EXCEPT
IN SIDEWALK, MEDIAN AND ISLAND AREAS
DETAIL A

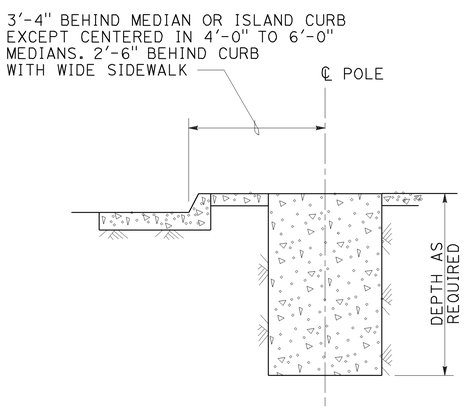

MEDIAN, ISLAND
OR WIDE SIDEWALK
DETAIL B-1
7' Wide and wider

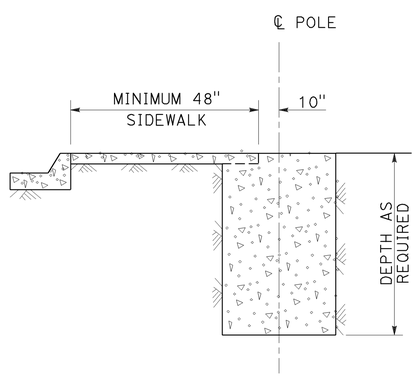

NARROW SIDEWALK
DETAIL B-2
Less than 7' wide

FOUNDATIONS IN SIDEWALK, MEDIAN AND ISLAND AREAS
DETAIL B

NOTES:

1. Where a portion of the foundation is above grade, the top edges shall have a 1" chamfer.
2. Slopes shall be horizontal to vertical ratio (Horizontal : Vertical).
3. Horizontal setbacks on cut and fill slopes steeper than 4:1 shall not exceed the distance shown for flat sections.
4. CIDH embedment depth shall be increased beyond standard depths by the diameter of the CIDH.

STATE OF CALIFORNIA
DEPARTMENT OF TRANSPORTATION

ELECTRICAL SYSTEMS (FOUNDATION INSTALLATIONS)

NO SCALE

RSP ES-11 DATED JULY 15, 2016 SUPERSEDES RSP ES-11 DATED JULY 19, 2013 AND STANDARD PLAN ES-11 DATED MAY 20, 2011 - PAGE 488 OF THE STANDARD PLANS BOOK DATED 2010.

REVISED STANDARD PLAN RSP ES-11

Dist	COUNTY	ROUTE	POST MILES TOTAL PROJECT	SHEET No.	TOTAL SHEETS
12	Ora	39	9.8/10.5	79	80

Theresa Gabriel
REGISTERED ELECTRICAL ENGINEER

April 15, 2016
PLANS APPROVAL DATE

REGISTERED PROFESSIONAL ENGINEER
Theresa Aziz Gabriel
No. E15129
Exp. 6-30-16
ELECTRICAL
STATE OF CALIFORNIA

THE STATE OF CALIFORNIA OR ITS OFFICERS OR AGENTS SHALL NOT BE RESPONSIBLE FOR THE ACCURACY OR COMPLETENESS OF SCANNED COPIES OF THIS PLAN SHEET.

TO ACCOMPANY PLANS DATED 06-06-2016

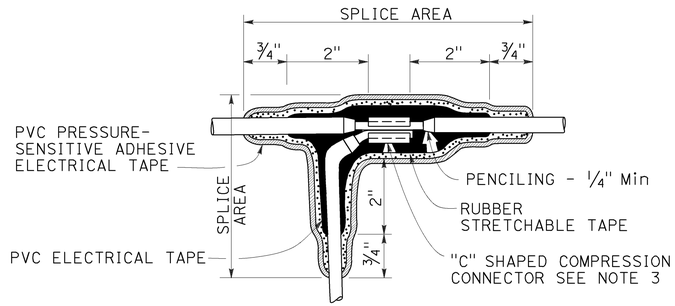

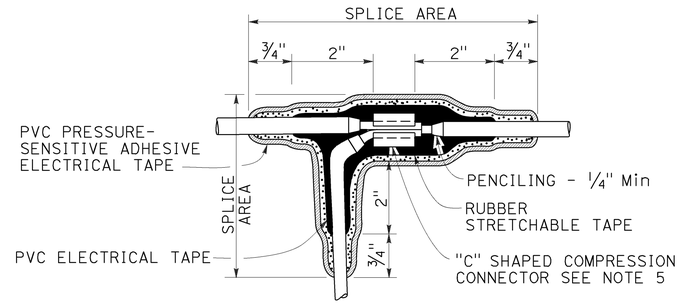

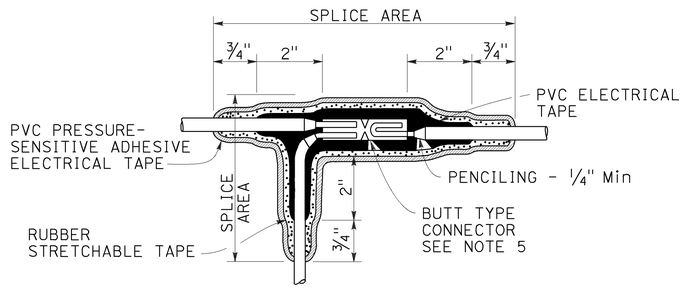

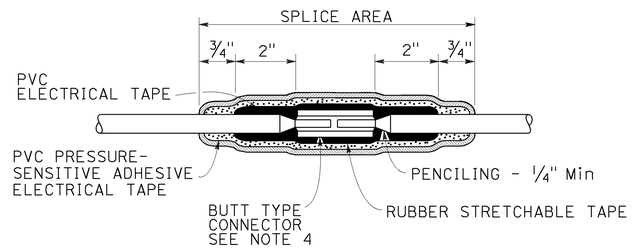

TYPICAL SPLICE INSULATION METHOD B

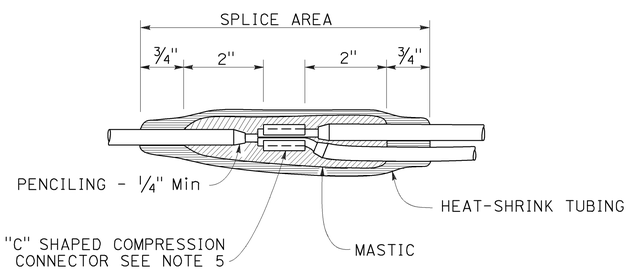

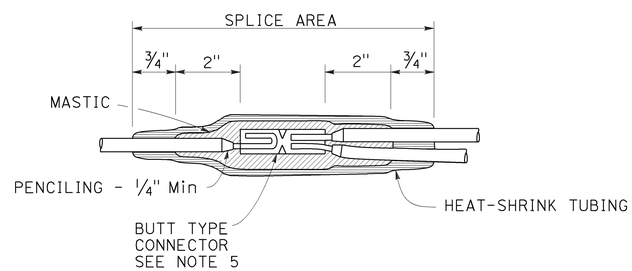

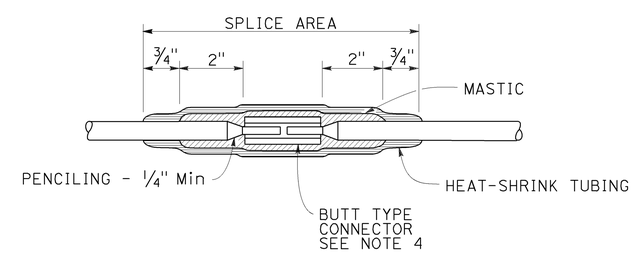

TYPICAL SPLICE INSULATION HEAT-SHRINK TUBING

NOTES:

1. Dimensions are minimum.
2. Rubber tapes shall be rolled after application.
3. Between 1 free-end and 1 through conductor.
4. Between 2 free-end conductors.
5. Between 3 free-end conductors.

STATE OF CALIFORNIA
DEPARTMENT OF TRANSPORTATION

ELECTRICAL SYSTEMS (SPLICE INSULATION METHODS DETAILS)

NO SCALE

RSP ES-13A DATED APRIL 15, 2016 SUPERSEDES RSP ES-13A DATED OCTOBER 30, 2015 AND STANDARD PLAN ES-13A DATED MAY 20, 2011 - PAGE 491 OF THE STANDARD PLANS BOOK DATED 2010.

REVISED STANDARD PLAN RSP ES-13A

2010 REVISED STANDARD PLAN RSP ES-13A

1-22-16

Dist	COUNTY	ROUTE	POST MILES TOTAL PROJECT	SHEET No.	TOTAL SHEETS
12	Ora	39	9.8/10.5	80	80

Theresa Gabriel
REGISTERED ELECTRICAL ENGINEER

April 15, 2016
PLANS APPROVAL DATE

REGISTERED PROFESSIONAL ENGINEER
Theresa Aziz Gabriel
No. E15129
Exp. 6-30-16
ELECTRICAL
STATE OF CALIFORNIA

THE STATE OF CALIFORNIA OR ITS OFFICERS OR AGENTS SHALL NOT BE RESPONSIBLE FOR THE ACCURACY OR COMPLETENESS OF SCANNED COPIES OF THIS PLAN SHEET.

TO ACCOMPANY PLANS DATED 06-06-2016

CIRCUIT VOLTAGE	FUSE VOLTAGE RATING	FUSE CURRENT RATING						
		HPS LAMP BALLAST		LOW PRESSURE SODIUM BALLAST	INDUCTION SIGN LIGHTING	SINGLE PHASE (TWO WIRE) TRANSFORMERS (PRIMARY SIDE)		
		70 W	100 W	180 W	85 W	1 kVA	2 kVA	3 kVA
120 V	250 V	5 A	5 A	5 A	5 A	10 A	20 A	30 A
240 V	250 V	5 A	5 A	5 A	5 A	6 A	10 A	20 A
480 V	500-600 V	5 A	5 A	3 A	1 A (SEE NOTE 2)	3 A	6 A	10 A

NOTES:

1. Primary lines of multiple ballasts shall be provided with fused connectors. Fuse ratings shall be as noted above.
2. See Revised Standard Plan RSP ES-15D, Type SC3 control.

FUSE RATINGS FOR FUSED CONNECTORS

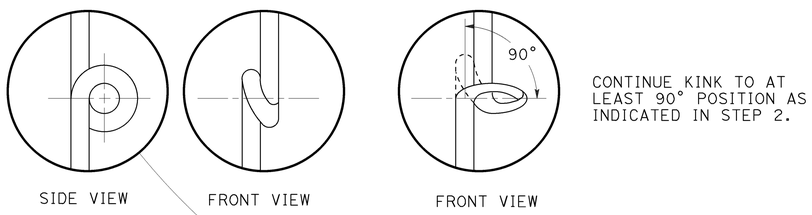

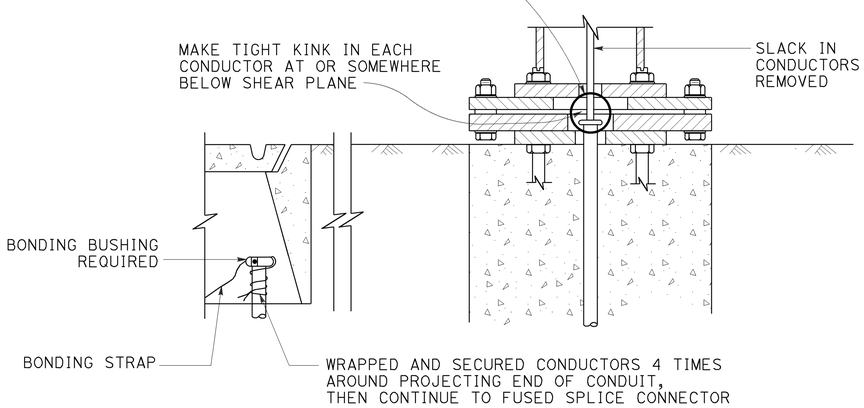

KINKING DETAIL FOR SLIP BASE STANDARDS

DETAIL A

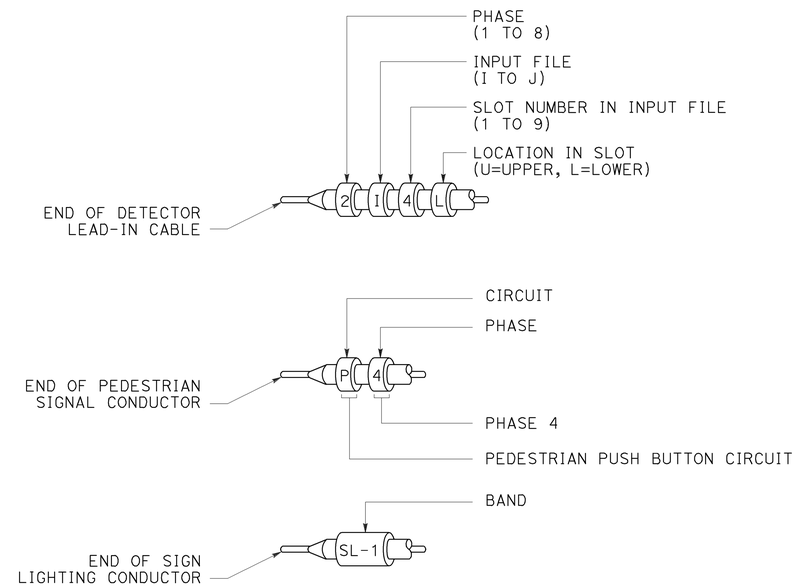

TYPICAL BANDING DETAILS

DETAIL B

STATE OF CALIFORNIA
DEPARTMENT OF TRANSPORTATION

ELECTRICAL SYSTEMS (FUSE RATING, KINKING AND BANDING DETAIL)

NO SCALE

RSP ES-13B DATED APRIL 15, 2016 SUPERSEDES STANDARD PLAN ES-13B DATED MAY 20, 2011 - PAGE 492 OF THE STANDARD PLANS BOOK DATED 2010.

REVISED STANDARD PLAN RSP ES-13B

2010 REVISED STANDARD PLAN RSP ES-13B

1-12-16