Dist	COUNTY	ROUTE	POST MILES TOTAL PROJECT	SHEET No.	TOTAL SHEETS
12	Ora	55	17.0/17.7	1	39

STATE OF CALIFORNIA
DEPARTMENT OF TRANSPORTATION

ACNH-P055(053)E

PROJECT PLANS FOR CONSTRUCTION ON
STATE HIGHWAY
IN ORANGE COUNTY
IN ANAHEIM
ON ROUTE 55 AT SANTIAGO BOULEVARD AND NOHL CANYON ROAD

TO BE SUPPLEMENTED BY STANDARD PLANS DATED MAY 2006

INDEX OF PLANS

SHEET No.	DESCRIPTION
1	TITLE AND LOCATION MAP
2-3	TYPICAL CROSS SECTIONS
4-5	LAYOUTS
6-9	CONSTRUCTION DETAILS
10	TEMPORARY WATER POLLUTION CONTROL PLANS AND DETAILS
11-12	CONTOUR GRADING
13-15	DRAINAGE PLANS, PROFILES, DETAILS AND QUANTITIES
16-17	UTILITY PLANS
18	CONSTRUCTION AREA SIGNS
19	SUMMARY OF QUANTITIES
20-26	HIGHWAY PLANTING PLANS, DETAILS AND QUANTITIES
27-39	REVISED AND NEW STANDARD PLANS

THE STANDARD PLANS LIST APPLICABLE TO THIS CONTRACT IS INCLUDED IN THE NOTICE TO BIDDERS AND SPECIAL PROVISIONS BOOK.

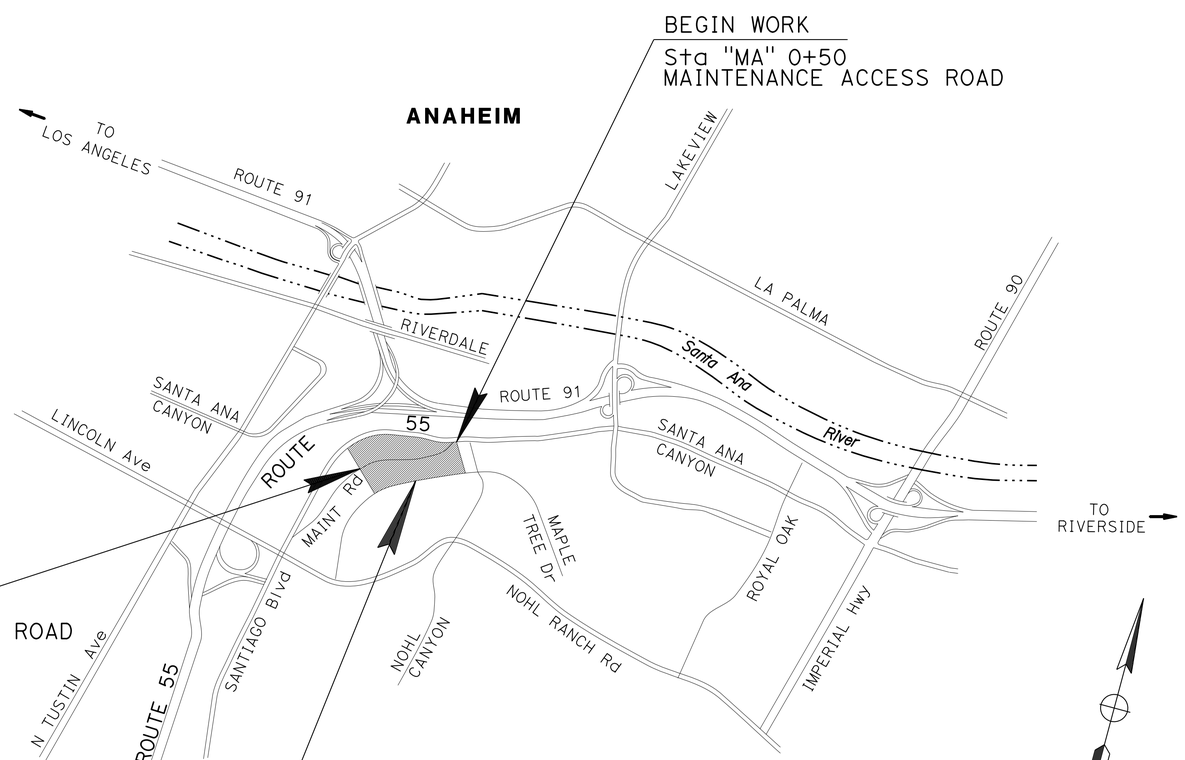

LOCATION MAP

LOCATION OF CONSTRUCTION
Sta "MA" 1+50 to Sta "MA" 11+50 MAINTENANCE ACCESS ROAD
Sta "A" 1+00 to Sta "A" 4+18.91 MAPLE TREE DRIVE

Allen Soofi 02-15-12
PROJECT ENGINEER DATE
REGISTERED CIVIL ENGINEER

April 16, 2012
PLANS APPROVAL DATE

REGISTERED PROFESSIONAL ENGINEER
ALLEN SOOFI
No. 49735
Exp. 9/30/12
CIVIL
STATE OF CALIFORNIA

THE STATE OF CALIFORNIA OR ITS OFFICERS OR AGENTS SHALL NOT BE RESPONSIBLE FOR THE ACCURACY OR COMPLETENESS OF SCANNED COPIES OF THIS PLAN SHEET.

PROJECT MANAGER: BOB BAZARGAN
DESIGN ENGINEER: ALLEN SOOFI

THE CONTRACTOR SHALL POSSESS THE CLASS (OR CLASSES) OF LICENSE AS SPECIFIED IN THE "NOTICE TO BIDDERS."

NO SCALE

CONTRACT No.	12-0H2084
PROJECT ID	1200000188

LAST REVISION 02-08-12
DATE PLOTTED => 24-JUL-2013
TIME PLOTTED => 06:46

Dist	COUNTY	ROUTE	POST MILES TOTAL PROJECT	SHEET No.	TOTAL SHEETS
12	Ora	55	17.0/17.7	2	39

REGISTERED CIVIL ENGINEER 02-15-12 DATE

4-16-12
PLANS APPROVAL DATE

REGISTERED PROFESSIONAL ENGINEER ALLEN SOOFI No. 49735 Exp. 9/30/12 CIVIL STATE OF CALIFORNIA

THE STATE OF CALIFORNIA OR ITS OFFICERS OR AGENTS SHALL NOT BE RESPONSIBLE FOR THE ACCURACY OR COMPLETENESS OF SCANNED COPIES OF THIS PLAN SHEET.

NOTES:

1. SLOPE GRADING CONFIGURATION SHALL TRANSITION SMOOTHLY BET. STA "MA" 2+00 AND STA "MA" 2+41, AND BET. STA "MA" 3+39 AND STA "MA" 4+00.

2. THE AREA BETWEEN "HIGH POINT" AND BACK OF SIDEWALK SHALL BE GRADED TO REMOVE THE EXISTING GRADE DROP-OFFS BETWEEN ADJACENT LOTS. REPLACE WITH A FINISHED GRADE THAT PARALLELS THE LONGITUDINAL PROFILE GRADE OF ADJACENT SIDEWALK.

3. IF EXISTING TOPOGRAPHY IS SUCH THAT THE SLOPE FROM HIGH POINT TO SIDEWALK IS LESS THAN MIN 2% THEN EMBANKMENT FILL SHALL BE CONSTRUCTED UNTIL MIN 2% IS ACHIEVED.

4. IN THE NORTHERN PORTION OF THE PROJECT SITE THERE ARE BURIED CONCRETE STRUCTURES THAT SHALL BE LEFT IN PLACE. THE PROPOSED GRADES SHOULD BE ADJUSTED IN THE FIELD TO PREVENT THE EXPOSURE AND DAMAGE TO THESE STRUCTURES.

5. IN THE SOUTHERN PORTION OF THE PROJECT SITE THERE IS A BURIED STRUCTURE WITH SOIL NAILS. A PORTION OF THIS STRUCTURE INCLUDING SOIL NAILS LOCATED ABOVE THE PROPOSED GRADES SHALL BE REMOVED.

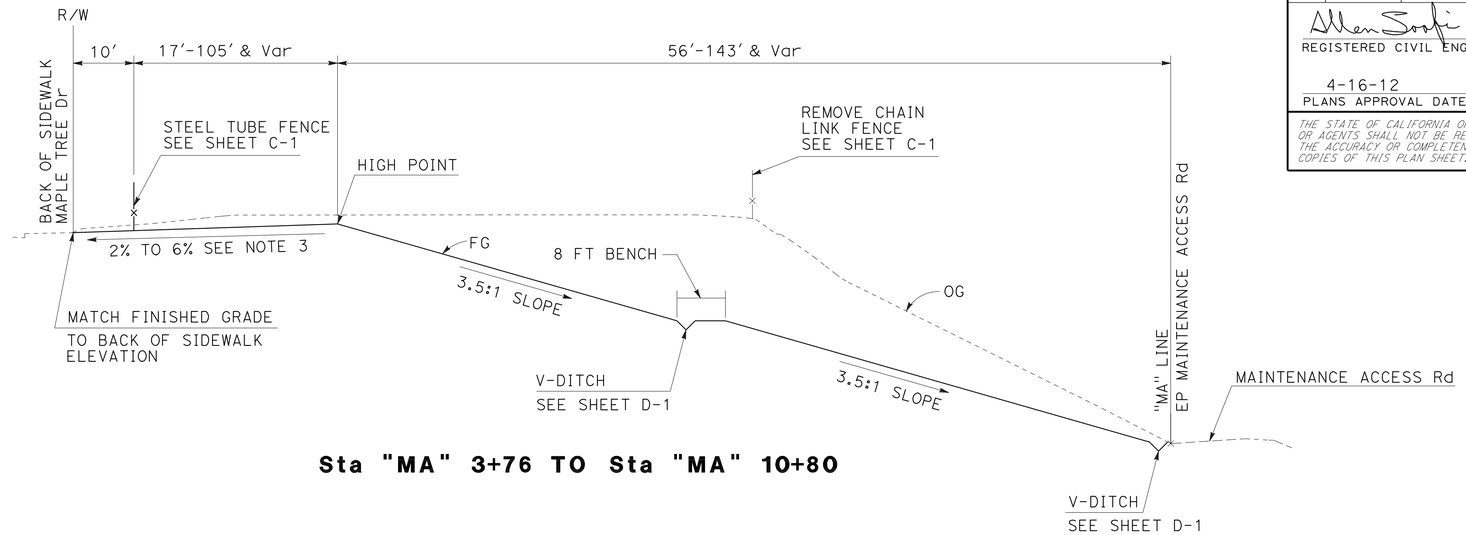

Sta "MA" 3+76 TO Sta "MA" 10+80

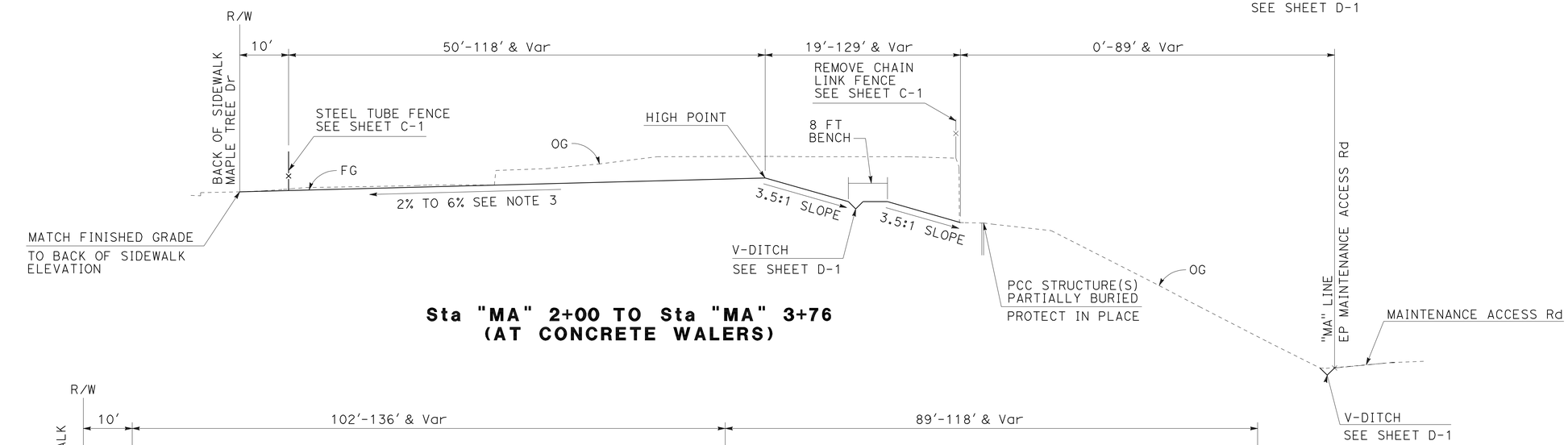

Sta "MA" 2+00 TO Sta "MA" 3+76
(AT CONCRETE WALERS)

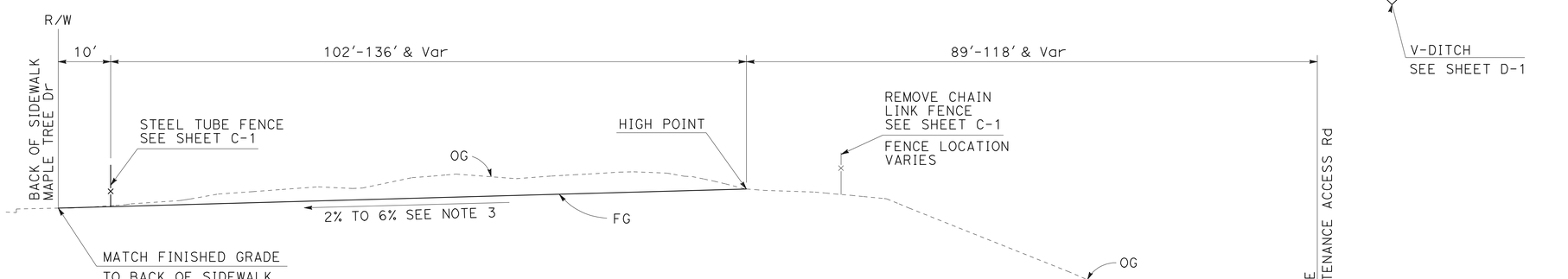

Sta "MA" 1+50 TO Sta "MA" 2+00

TYPICAL CROSS-SECTIONS

NO SCALE

X-1

STATE OF CALIFORNIA - DEPARTMENT OF TRANSPORTATION
Caltrans®
DESIGN BRANCH D
FUNCTIONAL SUPERVISOR: ANDREW OSHRIN
CALCULATED-DESIGNED BY
CHECKED BY
REVISED BY
DATE REVISED

LAST REVISION 02-08-12 | DATE PLOTTED => 17-APR-2012 | TIME PLOTTED => 09:52

Dist	COUNTY	ROUTE	POST MILES TOTAL PROJECT	SHEET No.	TOTAL SHEETS
12	Ora	55	17.0/17.7	3	39

REGISTERED CIVIL ENGINEER 02-15-12 DATE

4-16-12
PLANS APPROVAL DATE

REGISTERED PROFESSIONAL ENGINEER
ALLEN SOOFI
No. 49735
Exp. 9/30/12
CIVIL
STATE OF CALIFORNIA

THE STATE OF CALIFORNIA OR ITS OFFICERS OR AGENTS SHALL NOT BE RESPONSIBLE FOR THE ACCURACY OR COMPLETENESS OF SCANNED COPIES OF THIS PLAN SHEET.

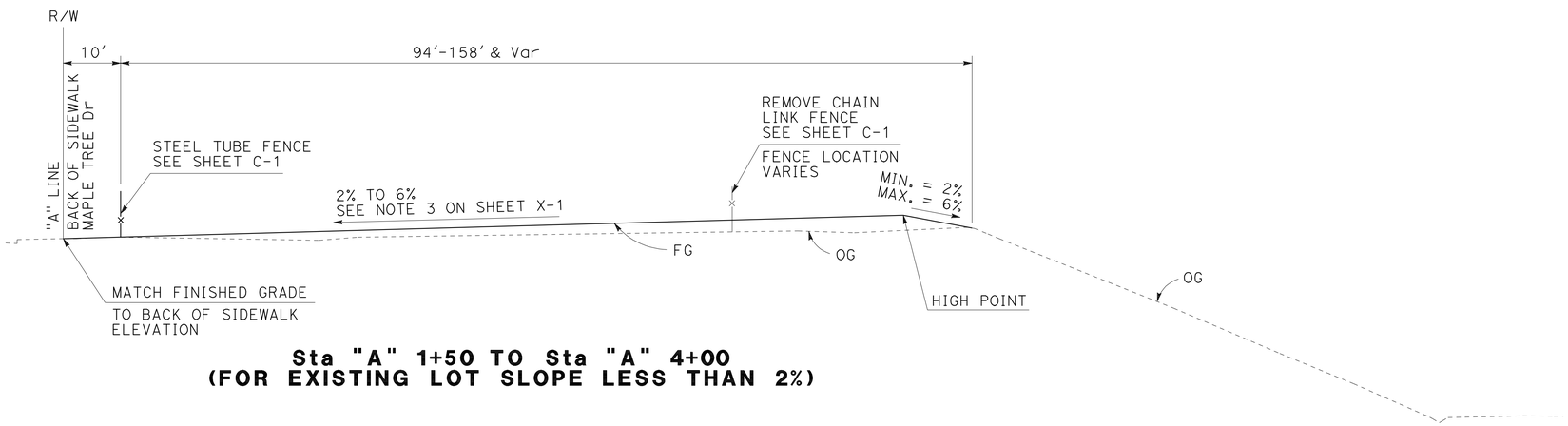

Sta "A" 1+50 TO Sta "A" 4+00
(FOR EXISTING LOT SLOPE LESS THAN 2%)

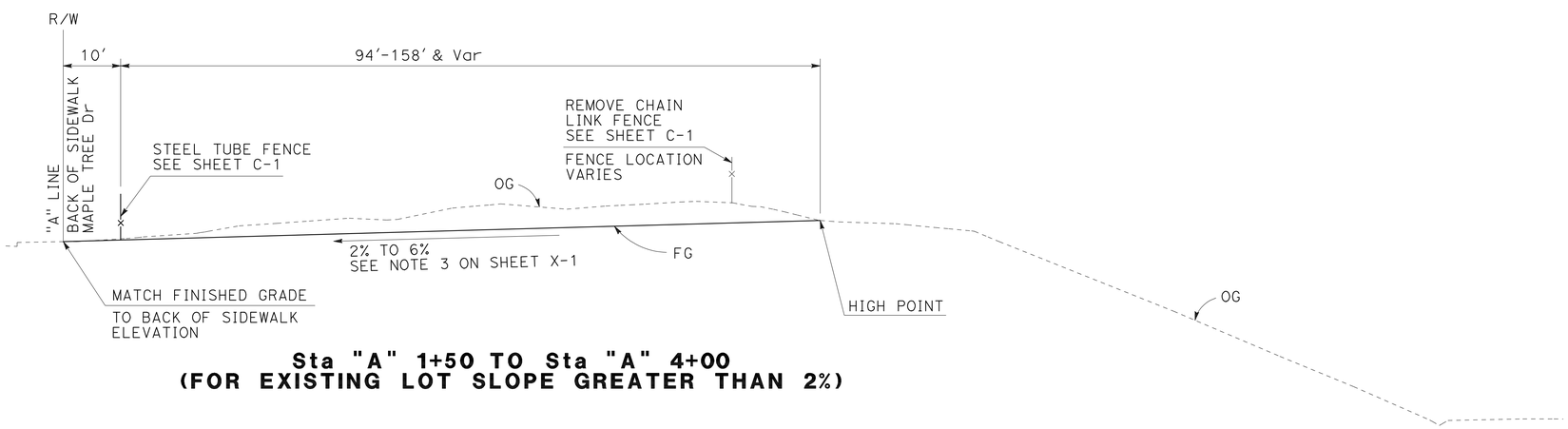

Sta "A" 1+50 TO Sta "A" 4+00
(FOR EXISTING LOT SLOPE GREATER THAN 2%)

TYPICAL CROSS-SECTIONS

NO SCALE

X-2

REVISED BY | DATE REVISED
CALCULATED-DESIGNED BY | CHECKED BY
FUNCTIONAL SUPERVISOR: ANDREW OSHRIN

STATE OF CALIFORNIA - DEPARTMENT OF TRANSPORTATION
Caltrans
DESIGN BRANCH D

LAST REVISION 02-08-12 | DATE PLOTTED => 17-APR-2012 | TIME PLOTTED => 09:52

Dist	COUNTY	ROUTE	POST MILES TOTAL PROJECT	SHEET No.	TOTAL SHEETS
12	Ora	55	17.0/17.7	4	39

REGISTERED CIVIL ENGINEER 03-19-12 DATE

4-16-12
PLANS APPROVAL DATE

REGISTERED PROFESSIONAL ENGINEER ALLEN SOOFI No. 49735 Exp. 9/30/12 CIVIL STATE OF CALIFORNIA

THE STATE OF CALIFORNIA OR ITS OFFICERS OR AGENTS SHALL NOT BE RESPONSIBLE FOR THE ACCURACY OR COMPLETENESS OF SCANNED COPIES OF THIS PLAN SHEET.

LEGEND:

ROADWAY EXCAVATION

3955 STREET ADDRESS

NOTES:

1. FOR RIGHT OF WAY DATA, CONTACT RIGHT OF WAY ENGINEERING AT THE DISTRICT OFFICE.
2. FOR STEEL TUBE FENCE AND GATE LOCATION, SEE SHEET C-1.
3. FOR TEMPORARY WATER POLLUTION CONTROL DETAILS SEE STANDARD PLANS T51, T56, T58, T61, T62, T63, AND T64.
4. IN THE NORTHERN PORTION OF THE PROJECT SITE, FROM APPROX. 118′ LEFT OF STA. "MA" 1+50 TO APPROX. 40′ LEFT OF STA. "MA" 3+53, THERE ARE BURIED CONCRETE STRUCTURES (CONCRETE WALERS) THAT SHALL BE PROTECTED IN PLACE. THE PROPOSED GRADES SHOULD BE ADJUSTED IN THE FIELD TO PREVENT THE EXPOSURE AND DAMAGE TO THESE STRUCTURES. CONTRACTOR SHALL EXPOSE CONCRETE STRUCTURES BY HAND-DIGGING. CONTRACTOR SHALL VERIFY THE LOCATION AND DIMENSIONS OF THE CONCRETE STRUCTURES IN THE FIELD BEFORE STARTING WORK.
5. IN THE SOUTHERN PORTION OF THE PROJECT SITE, FROM APPROX. 88′ LEFT OF STA. "MA" 8+78 TO APPROX. 80′ LEFT OF STA. "MA" 10+27, THERE IS A BURIED STRUCTURE WITH SOIL NAILS. A PORTION OF THIS STRUCTURE INCLUDING SOIL NAILS LOCATED ABOVE THE PROPOSED GRADES SHALL BE REMOVED. CONTRACTOR SHALL EXPOSE BURIED SOIL NAIL WALL(S) BY HAND-DIGGING. CONTRACTOR SHALL VERIFY THE LOCATION AND DIMENSIONS IN THE FIELD BEFORE STARTING WORK.
6. EXISTING UTILITY FACILITIES HAVE NOT BEEN PLOTTED ON THESE PLANS.
7. FOR LOCATIONS OF RETAINING WALLS TO BE REMOVED, SEE SHEET C-1.
8. FOR LOCATION OF HORIZONTAL DRAINS, SEE SHEET C-2.
9. FOR CURRENT INSTRUMENTATION TO BE PROTECTED IN PLACE, SEE SHEET C-3.
10. FOR CURB AND GUTTER, SEIDEWALK, AND DRIVEWAY LOCATIONS, SEE SHEET C-4.

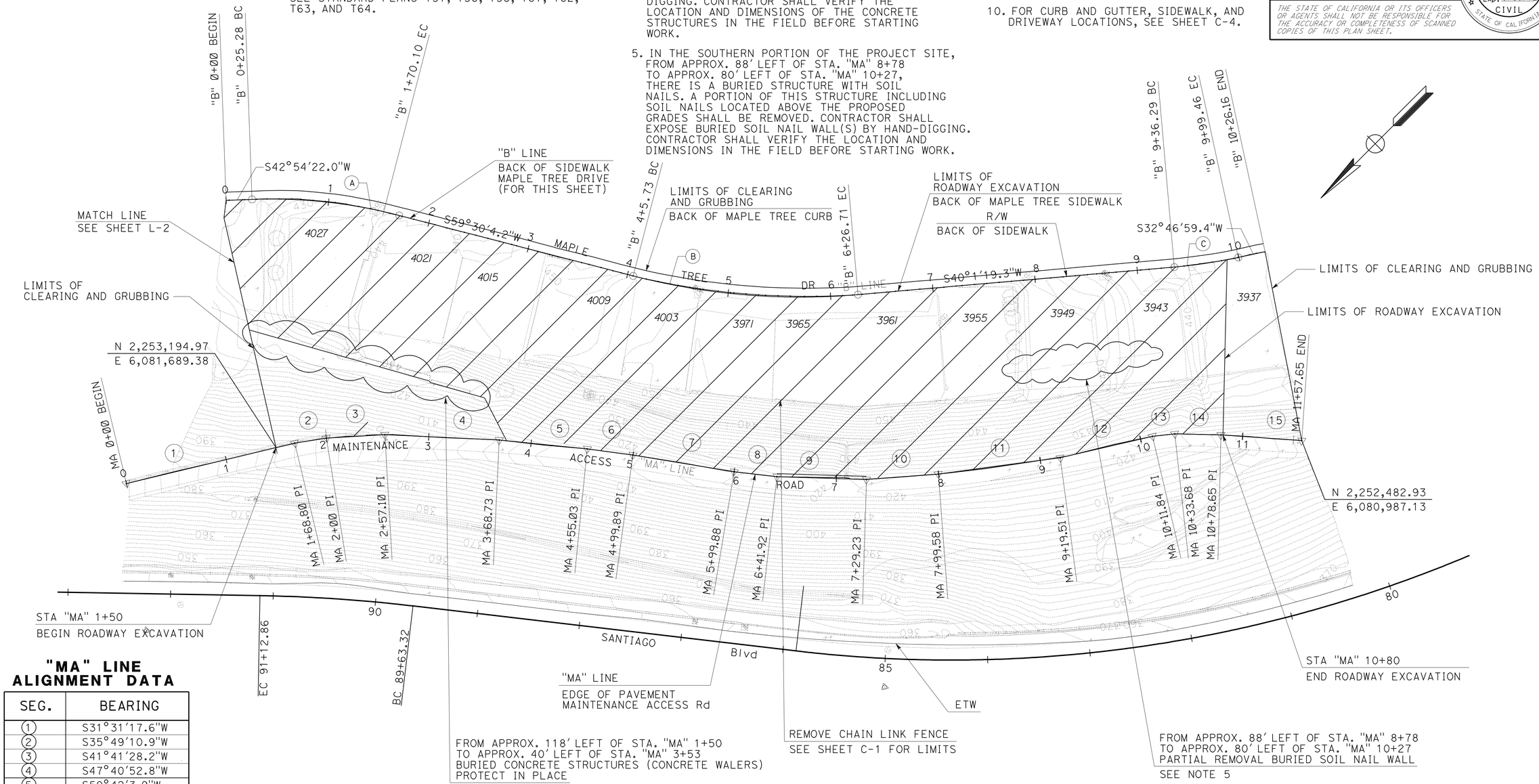

"MA" LINE ALIGNMENT DATA

SEG.	BEARING
1	S31°31′17.6"W
2	S35°49′10.9"W
3	S41°41′28.2"W
4	S47°40′52.8"W
5	S50°42′3.9"W
6	S52°44′20.5"W
7	S54°23′34.7"W
8	S51°34′25.3"W
9	S46°45′50.9"W
10	S40°41′18.6"W
11	S37°24′18.6"W
12	S31°52′41.6"W
13	S38°43′46.9"W
14	S46°21′27.9"W
15	S48°57′21.8"W

"B" LINE CURVE DATA

No.	R	Δ	T	L
A	500.00′	16°35′42"	72.92′	144.82′
B	650.00′	19°28′45"	111.57′	220.98′
C	500.00′	7°14′20"	31.63′	63.17′

LAYOUT

SCALE: 1" = 50′

L-1

STATE OF CALIFORNIA - DEPARTMENT OF TRANSPORTATION
Caltrans® DESIGN BRANCH D
FUNCTIONAL SUPERVISOR ANDREW OSHRIN
CALCULATED-DESIGNED BY
CHECKED BY
REVISED BY
DATE REVISED

LAST REVISION 02-08-12
DATE PLOTTED => 17-APR-2012
TIME PLOTTED => 09:52

Dist	COUNTY	ROUTE	POST MILES TOTAL PROJECT	SHEET No.	TOTAL SHEETS
12	Ora	55	17.0/17.7	5	39

REGISTERED CIVIL ENGINEER 03-19-12 DATE

4-16-12
PLANS APPROVAL DATE

REGISTERED PROFESSIONAL ENGINEER
ALLEN SOOFI
No. 49735
Exp. 9/30/12
CIVIL
STATE OF CALIFORNIA

THE STATE OF CALIFORNIA OR ITS OFFICERS OR AGENTS SHALL NOT BE RESPONSIBLE FOR THE ACCURACY OR COMPLETENESS OF SCANNED COPIES OF THIS PLAN SHEET.

LEGEND:

ROADWAY EXCAVATION

3955 STREET ADDRESS

NOTES:

1. FOR RIGHT OF WAY DATA, CONTACT RIGHT OF WAY ENGINEERING AT THE DISTRICT OFFICE.

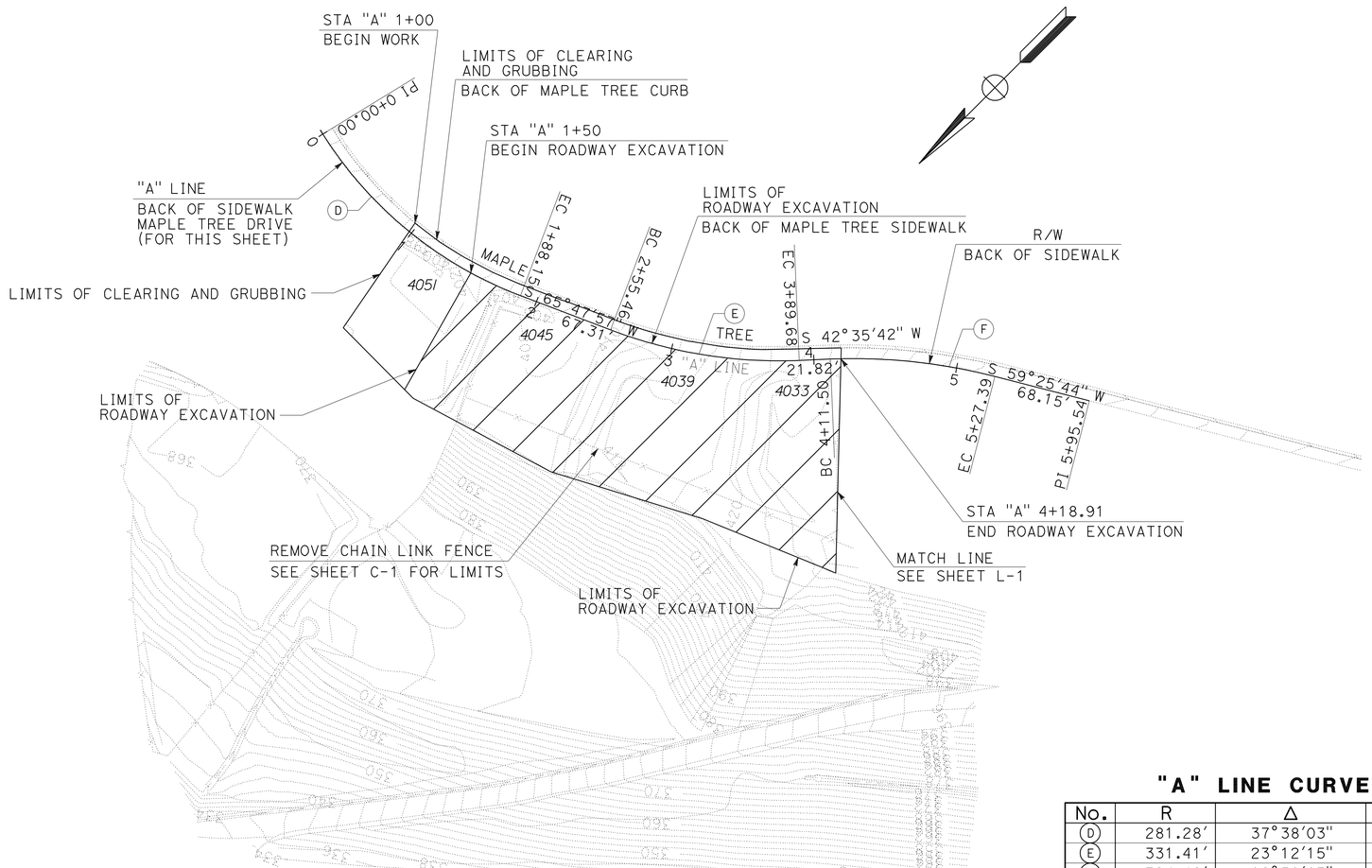

"A" LINE CURVE DATA

No.	R	Δ	T	L
D	281.28′	37°38′03"	95.85′	184.75′
E	331.41′	23°12′15"	68.04′	134.22′
F	394.46′	16°50′03"	58.37′	115.90′

LAYOUT

SCALE: 1" = 50′

L-2

STATE OF CALIFORNIA - DEPARTMENT OF TRANSPORTATION
Caltrans® DESIGN BRANCH D
FUNCTIONAL SUPERVISOR: ANDREW OSHRIN
CALCULATED-DESIGNED BY
CHECKED BY
REVISED BY
DATE REVISED

LAST REVISION 02-08-12 | DATE PLOTTED => 17-APR-2012 | TIME PLOTTED => 09:52

Dist	COUNTY	ROUTE	POST MILES TOTAL PROJECT	SHEET No.	TOTAL SHEETS
12	Ora	55	17.0/17.7	6	39

REGISTERED CIVIL ENGINEER 02-15-12 DATE

4-16-12
PLANS APPROVAL DATE

REGISTERED PROFESSIONAL ENGINEER
ALLEN SOOFI
No. 49735
Exp. 9/30/12
CIVIL
STATE OF CALIFORNIA

THE STATE OF CALIFORNIA OR ITS OFFICERS OR AGENTS SHALL NOT BE RESPONSIBLE FOR THE ACCURACY OR COMPLETENESS OF SCANNED COPIES OF THIS PLAN SHEET.

NOTE:

1. CHAIN LINK FENCE LOCATIONS SHOWN MAY VARY FOM ACTUAL LOCATION.
2. NUMBER AND LOCATIONS OF RETAINING WALLS SHOWN TO BE REMOVED MAY VARY FROM ACTUAL.

LEGEND:

—×———×— STEEL TUBE FENCE

STEEL TUBE GATE

3955 STREET ADDRESS

CONSTRUCTION DETAILS
(FENCE AND GATE)

NO SCALE

C-1

APPROVED FOR STEEL TUBE, FENCE AND GATE WORK ONLY

REVISED BY	DATE REVISED

CALCULATED-
DESIGNED BY
CHECKED BY

FUNCTIONAL SUPERVISOR
ANDREW OSHRIN

STATE OF CALIFORNIA - DEPARTMENT OF TRANSPORTATION
Caltrans
DESIGN BRANCH D

LAST REVISION 02-08-12
DATE PLOTTED => 17-APR-2012
TIME PLOTTED => 09:53

Dist	COUNTY	ROUTE	POST MILES TOTAL PROJECT	SHEET No.	TOTAL SHEETS
12	Ora	55	17.0/17.7	7	39

REGISTERED CIVIL ENGINEER 03-19-12 DATE

4-16-12
PLANS APPROVAL DATE

REGISTERED PROFESSIONAL ENGINEER ALLEN SOOFI No. 49735 Exp. 9/30/12 CIVIL STATE OF CALIFORNIA

THE STATE OF CALIFORNIA OR ITS OFFICERS OR AGENTS SHALL NOT BE RESPONSIBLE FOR THE ACCURACY OR COMPLETENESS OF SCANNED COPIES OF THIS PLAN SHEET.

NOTES:

1. FOR HORIZONTAL DRAINS THE 20-FOOT SECTION NEAREST TO SANTIAGO BLVD SHALL BE 4-INCH DIAMETER PLASTIC PIPE, AND THE REMAINING LENGTH OF PIPE SHALL SHALL BE SLOTTED PIPE.
2. HORIZONTAL DRAIN PIPES SHALL BE INSTALLED BY HORIZONTAL DRILLING, AT AN INCLINE ANGLE OF 6° FROM HORIZONTAL.
3. HORIZONTAL DRAIN PIPE LOCATIONS ARE SHOWN APPROXIMATELY. CONTRACTOR SHALL VERIFY EXACT LOCATIONS WITH THE ENGINEER.
4. SPACING FOR HORIZONTAL DRAINS H-13 TO H-54 IS 15 FT ON CENTER OR AS OTHERWISE DIRECTED BY THE ENGINEER.

LEGEND:

	4-IN DIA PLASTIC PIPE HORIZONTAL DRAIN & 4-IN DIA SLOTTED CORRUGATED PLASTIC PIPE HORIZONTAL DRAIN SEE NOTE 1
H-1	HORIZONTAL DRAIN NUMBER
3955	STREET ADDRESS

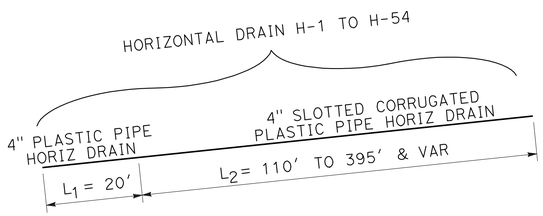

DETAIL "A"

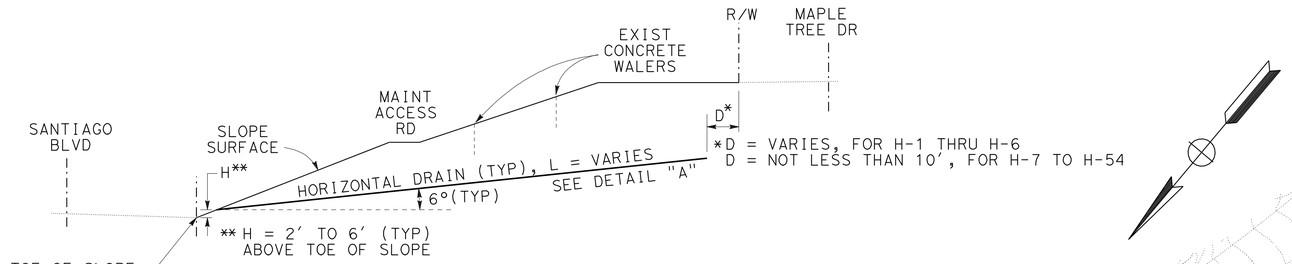

HORIZONTAL DRAINS TYPICAL SECTION

NO SCALE

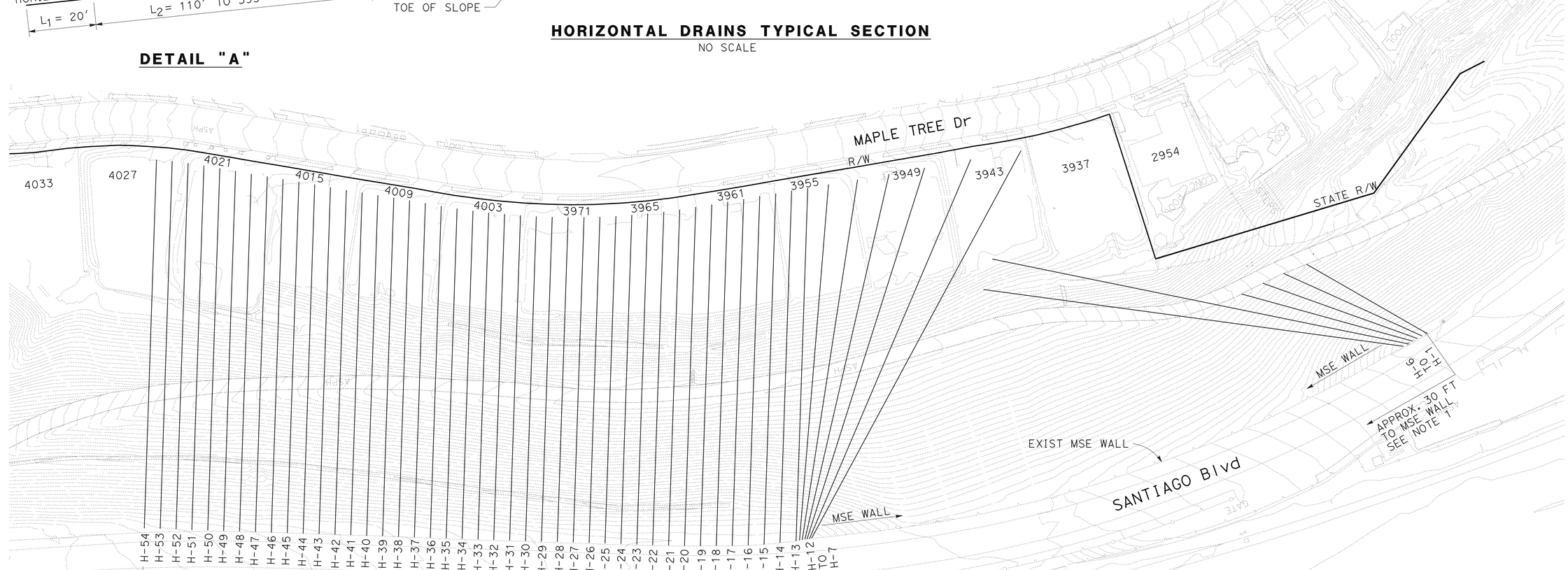

CONSTRUCTION DETAILS
(HORIZONTAL DRAINS)

NO SCALE

APPROVED FOR HORIZONTAL DRAIN WORK ONLY

C-2

STATE OF CALIFORNIA - DEPARTMENT OF TRANSPORTATION
Caltrans® DESIGN BRANCH D
FUNCTIONAL SUPERVISOR: ANDREW OSHRIN
CALCULATED-DESIGNED BY
CHECKED BY
REVISED BY
DATE REVISED

LAST REVISION 02-08-12 | DATE PLOTTED => 17-APR-2012 | TIME PLOTTED => 09:53

Dist	COUNTY	ROUTE	POST MILES TOTAL PROJECT	SHEET No.	TOTAL SHEETS
12	Ora	55	17.0/17.7	8	39

REGISTERED CIVIL ENGINEER 02-15-12 DATE

4-16-12
PLANS APPROVAL DATE

REGISTERED PROFESSIONAL ENGINEER ALLEN SOOFI No. 49735 Exp. 9/30/12 CIVIL STATE OF CALIFORNIA

THE STATE OF CALIFORNIA OR ITS OFFICERS OR AGENTS SHALL NOT BE RESPONSIBLE FOR THE ACCURACY OR COMPLETENESS OF SCANNED COPIES OF THIS PLAN SHEET.

CURRENT INSTRUMENTATION POINTS

LEGEND:

- SI-43 — SLOPE INCLINOMETER LOCATION
- OW-15 — OBSERVATION WELL LOCATION
- PZ-2 — PIEZOMETER MONITORING WELL LOCATION
- 3955 — STREET ADDRESS

NOTE:

1. CURRENT INSTRUMENTATION POINTS AT LOCATIONS SHOWN ON THIS PLAN SHALL BE TAGGED OR OTHERWISE IDENTIFIED IN THE FIELD PRIOR TO COMMENCEMENT OF WORK, AND SHALL BE PROTECTED IN PLACE.

SLOPE INCLINOMETERS		
SI-13	SI-07-1	SI-C1
SI-14	SI-07-2	SI-C2
SI-15	SI-07-3	SI-C3
SI-32	SI-07-4	SI-C4
SI-33	SI-07-5	SI-C5
SI-34	SI-07-6	SI-C6
SI-35	SI-07-7	SI-C7
SI-36	SI-07-8	SI-C8
SI-42	SI-R-10-003	SI-C9
SI-43	SI-R-10-009	SI-C10

OBSERVATION WELLS	
OW-1	OW-07-3
OW-15	OW-07-4
OW-16	OW-07-5
OW-17	OW-R-10-001
OW-18	OW-R-10-002
OW-07-1	OW-R-10-010
OW-07-2	

PIEZOMETERS
PZ-1
PZ-2
PZ-3
PZ-4

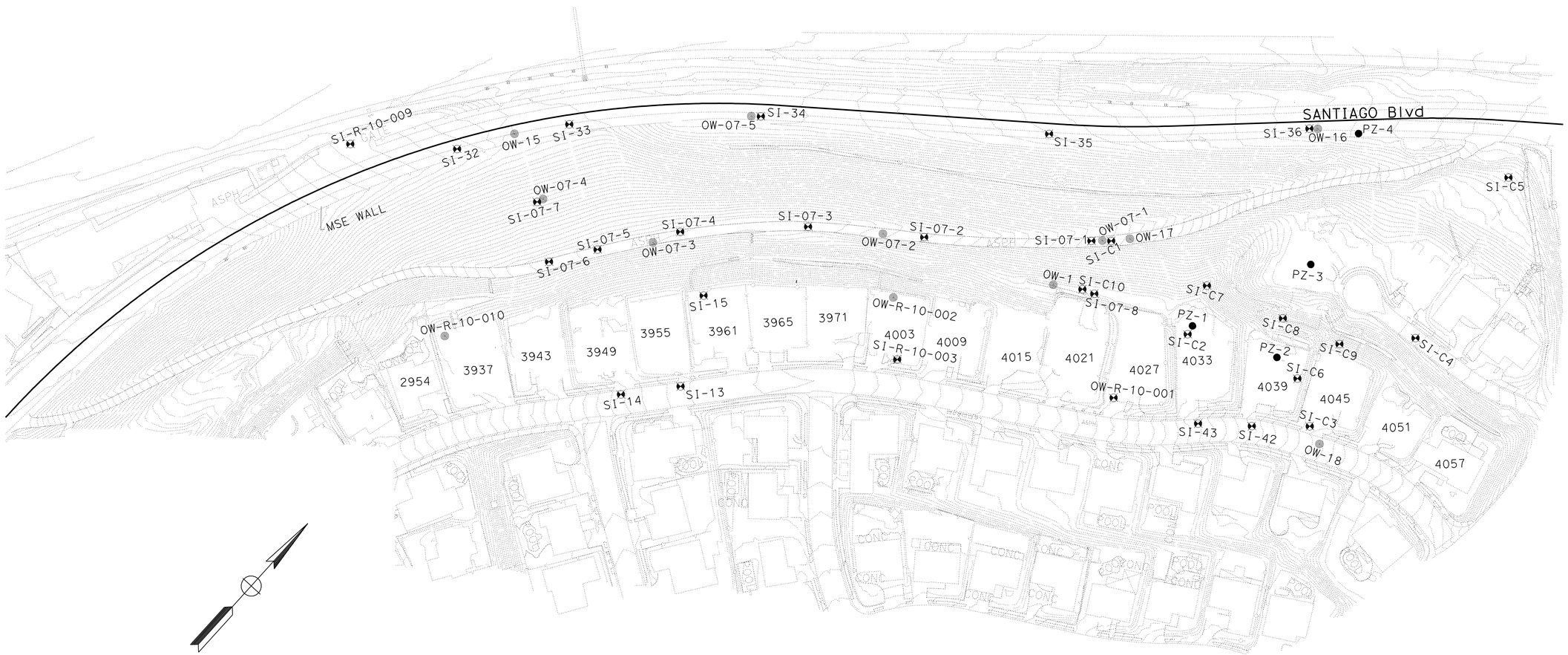

CONSTRUCTION DETAILS
(INSTRUMENTATION LOCATIONS)

NO SCALE

APPROVED FOR INSTRUMENTATION LOCATIONS WORK ONLY

C-3

STATE OF CALIFORNIA - DEPARTMENT OF TRANSPORTATION
Caltrans
DESIGN BRANCH D
FUNCTIONAL SUPERVISOR: ANDREW OSHRIN
CALCULATED-DESIGNED BY
CHECKED BY
REVISED BY
DATE REVISED

LAST REVISION 02-08-12
DATE PLOTTED => 17-APR-2012
TIME PLOTTED => 09:53

Dist	COUNTY	ROUTE	POST MILES TOTAL PROJECT	SHEET No.	TOTAL SHEETS
12	Ora	55	17.0/17.7	9	39

REGISTERED CIVIL ENGINEER 02-15-12 DATE

4-16-12
PLANS APPROVAL DATE

REGISTERED PROFESSIONAL ENGINEER
ALLEN SOOFI
No. 49735
Exp. 9/30/12
CIVIL
STATE OF CALIFORNIA

THE STATE OF CALIFORNIA OR ITS OFFICERS OR AGENTS SHALL NOT BE RESPONSIBLE FOR THE ACCURACY OR COMPLETENESS OF SCANNED COPIES OF THIS PLAN SHEET.

DESCRIPTION OF WORK:

Ⓐ
1. REMOVE EXISTING SIDEWALK
2. REMOVE ANY EXISTING TREES, VEGETATION, AND PARKWAY IMPROVEMENTS
3. CONSTRUCT PCC SIDEWALK (WIDTH = 8 FT, THICKNESS = 4 IN) WITHOUT TREE WELL/PLANTERS

Ⓑ
1. REMOVE EXISTING DRIVEWAY
2. CONSTRUCT TYPE A2-8 CURB PER REVISED STD PLN A87A AND MATCH EXISTING CURB AT JOIN LINE
3. CONSTRUCT PCC SIDEWALK (WIDTH = 8 FT, THICKNESS = 4 IN) WITHOUT TREE WELL/PLANTERS

Ⓒ
1. REMOVE EXISTING DRIVEWAY
2. CONSTRUCT DRIVEWAY PER REVISED STD PLN A87A (W = 18 FT, T = 6 IN)

LEGEND:

3955 STREET ADDRESS

PARKWAY TREE TO BE REMOVED

NOTES:

1. FOR ANY DEPRESSIONS UNDER OR AROUND EXISTING SIDEWALKS, DRIVEWAYS, OR TREES, WHERE THE DEPTH FROM THE FINISHED SURFACE IS GREATER THAN 4", THE DEPRESSION SHALL BE BACKFILLED WITH CLASS 2 AGGREGATE BASE.

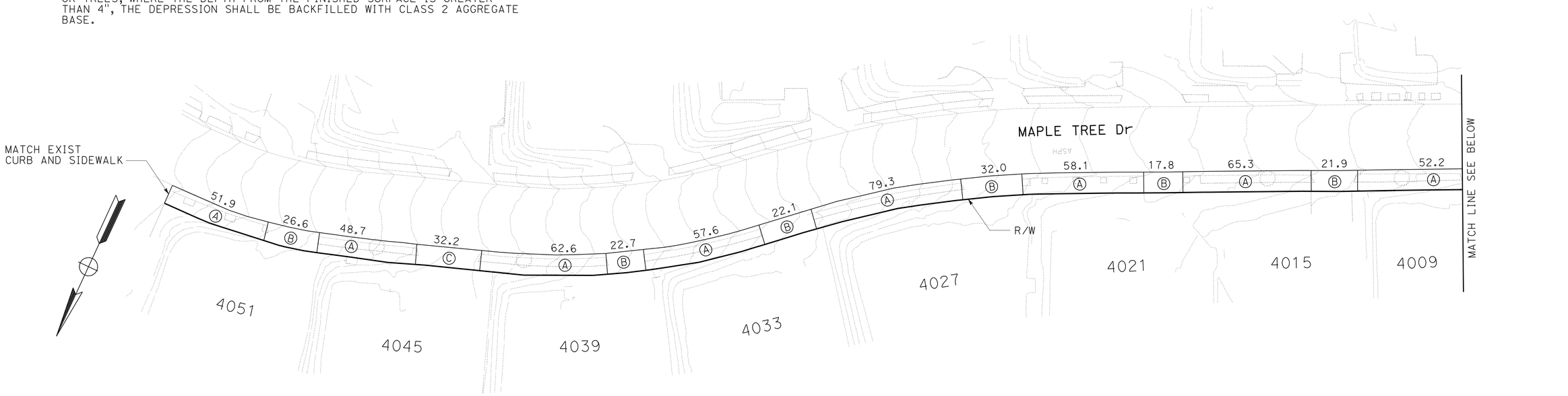

CONSTRUCTION DETAILS
(CURB AND GUTTER AND SIDEWALK)

NO SCALE

APPROVED FOR CURB, GUTTER AND SIDEWALK WORK ONLY

C-4

STATE OF CALIFORNIA - DEPARTMENT OF TRANSPORTATION
Caltrans
DESIGN BRANCH D
FUNCTIONAL SUPERVISOR: ANDREW OSHRIN
CALCULATED-DESIGNED BY
CHECKED BY
REVISED BY
DATE REVISED

LAST REVISION 02-08-12
DATE PLOTTED => 17-APR-2012
TIME PLOTTED => 09:53

Dist	COUNTY	ROUTE	POST MILES TOTAL PROJECT	SHEET No.	TOTAL SHEETS
12	Ora	55	17.0/17.7	10	39

REGISTERED CIVIL ENGINEER 03-19-12 DATE

4-16-12
PLANS APPROVAL DATE

REGISTERED PROFESSIONAL ENGINEER ALLEN SOOFI No. 49735 Exp. 9/30/12 CIVIL STATE OF CALIFORNIA

THE STATE OF CALIFORNIA OR ITS OFFICERS OR AGENTS SHALL NOT BE RESPONSIBLE FOR THE ACCURACY OR COMPLETENESS OF SCANNED COPIES OF THIS PLAN SHEET.

LEGEND:

- TEMPORARY HYDRAULIC MULCH (BFM)
- TGBB — TEMPORARY GRAVEL BAG BERM
- TFR — TEMPORARY FIBER ROLL
- TEMPORARY CONCRETE WASHOUT (PORTABLE)
- TEMPORARY CONSTRUCTION ENTRANCE
- TEMPORARY DRAINAGE INLET PROTECTION
- SAMPLING POINT

NOTES:

1. THE EXACT LOCATIONS FOR WATER POLLUTION CONTROL ITEMS WILL BE DETERMINED BY THE ENGINEER.
2. TEMPORARY FIBER ROLLS SHALL BE SPACED 20 FT ON CENTER (O.C.) FOR SLOPES 4:1 (H:V) OR FLATTER, 15 FT O.C. FOR SLOPES BETWEEN 4:1 (H:V) AND 2:1 (H:V), AND 10 FT O.C. FOR SLOPES STEEPER THAN 2:1 (H:V).

TEMPORARY WATER POLLUTION CONTROL QUANTITIES

SHEET No.	TEMPORARY HYDRAULIC MULCH	TEMPORARY GRAVEL BAG BERM	TEMPORARY FIBER ROLL	TEMPORARY CONCRETE WASHOUT (PORTABLE)	TEMPORARY CONSTRUCTION ENTRANCE	TEMPORARY DRAINAGE INLET PROTECTION
	SQFT	LF	LF	LS	EA	EA
WPC-1	135,576	2,680	14,600	1	1	6
TOTAL	135,576	2,680	14,600	1	1	6

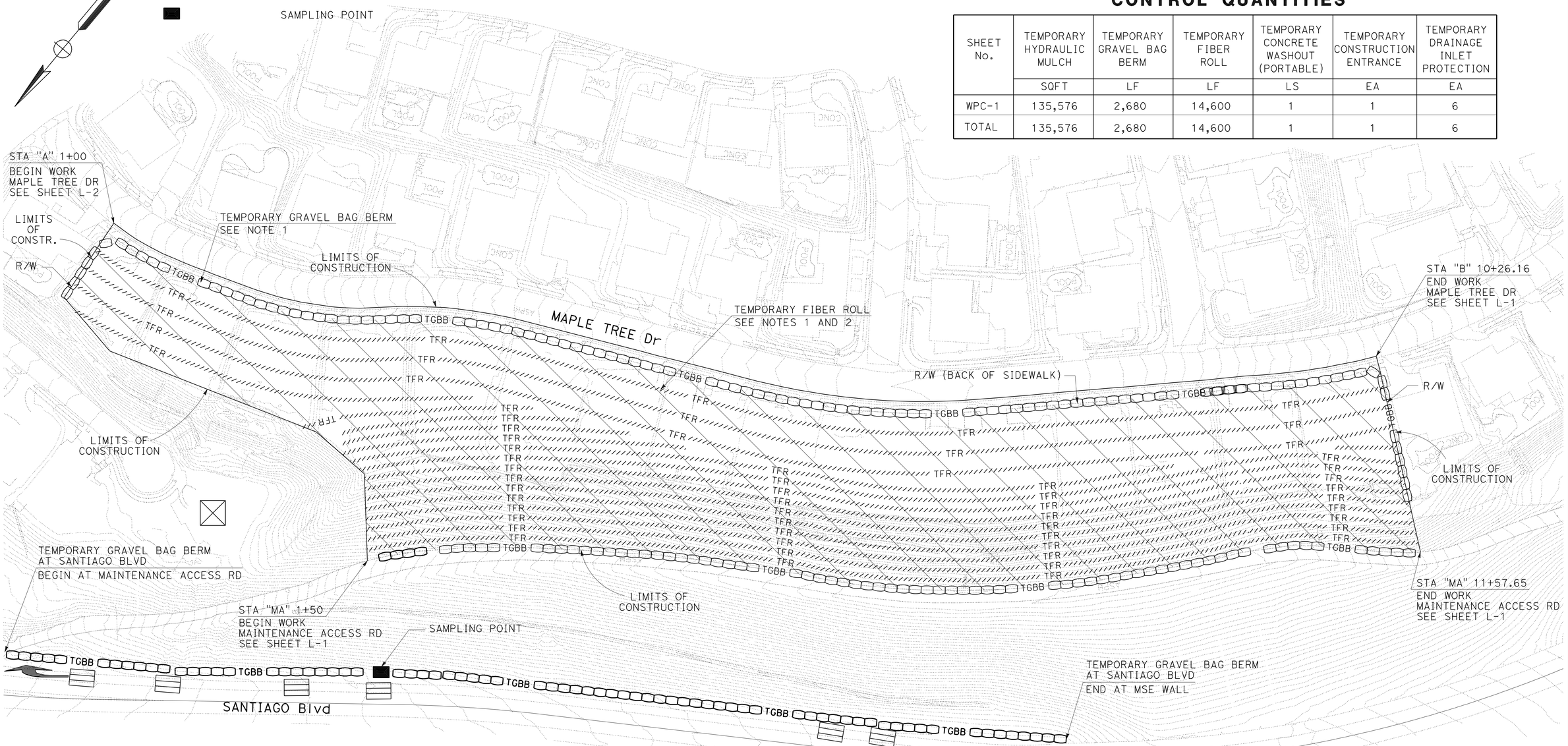

TEMPORARY WATER POLLUTION CONTROL PLAN

NO SCALE

APPROVED FOR TEMPORARY WATER POLLUTION CONTROL WORK ONLY

WPC-1

REVISED BY | DATE REVISED | CALCULATED-DESIGNED BY | CHECKED BY | FUNCTIONAL SUPERVISOR: ANDREW OSHRIN

STATE OF CALIFORNIA - DEPARTMENT OF TRANSPORTATION
Caltrans®
DESIGN BRANCH D

LAST REVISION 02-08-12 | DATE PLOTTED => 17-APR-2012 | TIME PLOTTED => 09:54

Dist	COUNTY	ROUTE	POST MILES TOTAL PROJECT	SHEET No.	TOTAL SHEETS
12	Ora	55	17.0/17.7	11	39

REGISTERED CIVIL ENGINEER 03-19-12 DATE

4-16-12
PLANS APPROVAL DATE

REGISTERED PROFESSIONAL ENGINEER
ALLEN SOOFI
No. 49735
Exp. 9/30/12
CIVIL
STATE OF CALIFORNIA

THE STATE OF CALIFORNIA OR ITS OFFICERS OR AGENTS SHALL NOT BE RESPONSIBLE FOR THE ACCURACY OR COMPLETENESS OF SCANNED COPIES OF THIS PLAN SHEET.

NOTES:

1. MINOR REMEDIAL GRADING MAY BE NEEDED AND WILL BE DECIDED IN THE FIELD BY THE ENGINEER.

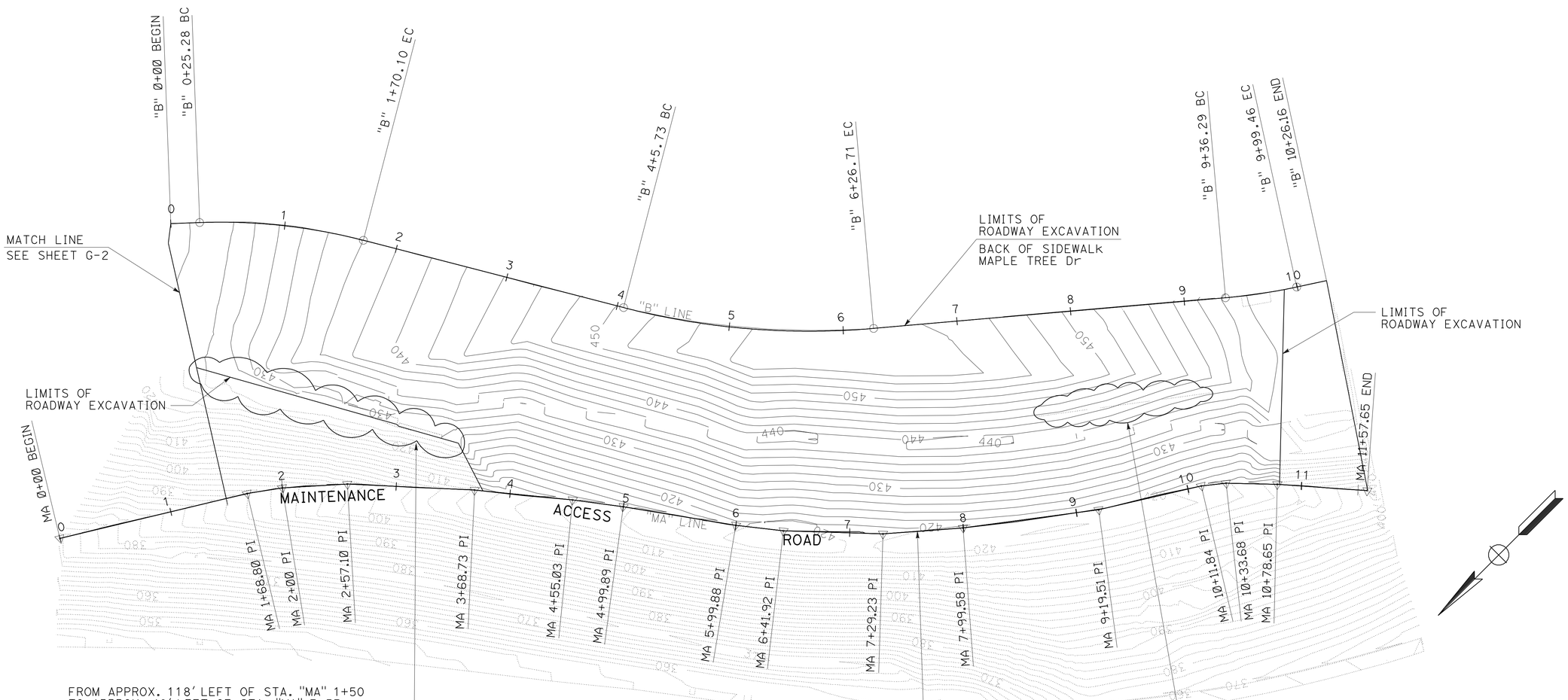

CONTOUR GRADING

SCALE: 1" = 50'

APPROVED FOR CONTOUR GRADING WORK ONLY

G-1

REVISED BY | DATE REVISED
CALCULATED-DESIGNED BY | CHECKED BY
FUNCTIONAL SUPERVISOR: ANDREW OSHRIN

STATE OF CALIFORNIA - DEPARTMENT OF TRANSPORTATION
Caltrans
DESIGN BRANCH D

LAST REVISION 02-08-12 | DATE PLOTTED => 17-APR-2012 | TIME PLOTTED => 09:54

Dist	COUNTY	ROUTE	POST MILES TOTAL PROJECT	SHEET No.	TOTAL SHEETS
12	Ora	55	17.0/17.7	12	39

REGISTERED CIVIL ENGINEER 02-15-12 DATE

4-16-12
PLANS APPROVAL DATE

REGISTERED PROFESSIONAL ENGINEER
ALLEN SOOFI
No. 49735
Exp. 9/30/12
CIVIL
STATE OF CALIFORNIA

THE STATE OF CALIFORNIA OR ITS OFFICERS OR AGENTS SHALL NOT BE RESPONSIBLE FOR THE ACCURACY OR COMPLETENESS OF SCANNED COPIES OF THIS PLAN SHEET.

NOTES:

1. MINOR REMEDIAL GRADING MAY BE NEEDED AND WILL BE DECIDED IN THE FIELD BY THE ENGINEER.

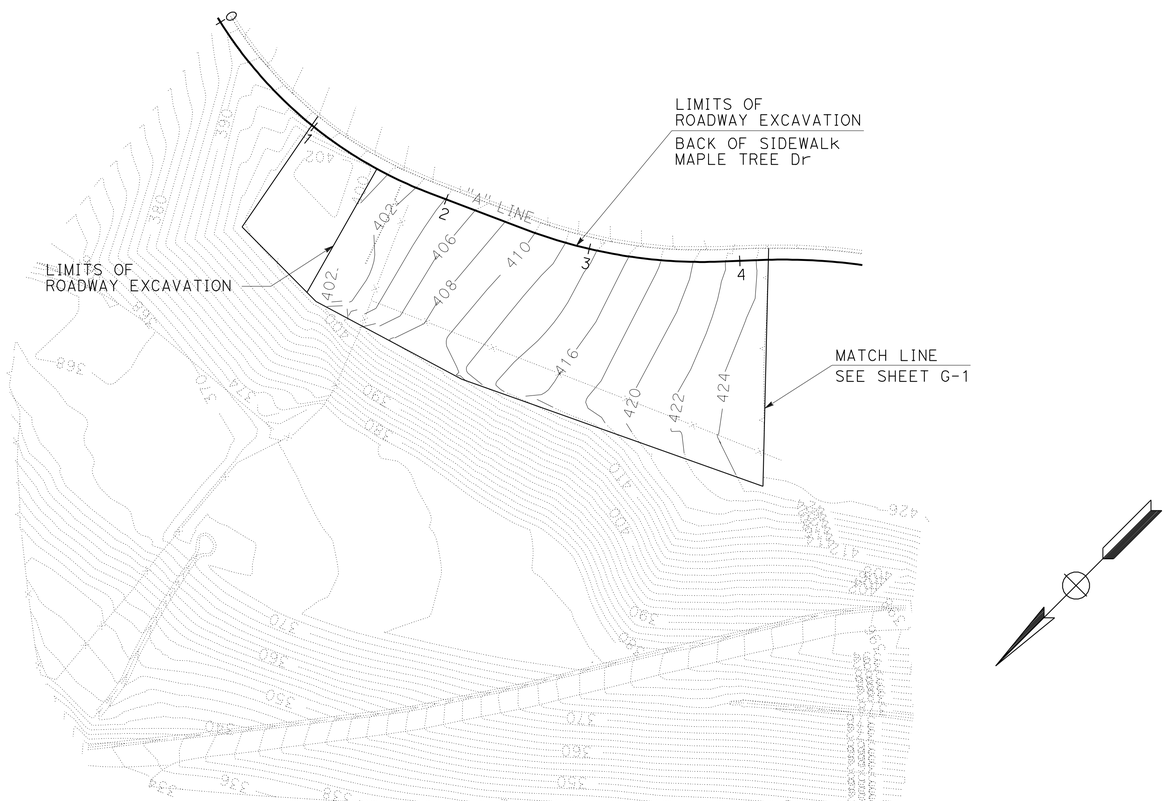

APPROVED FOR CONTOUR GRADING WORK ONLY

CONTOUR GRADING

SCALE: 1" = 50'

G-2

REVISED BY | DATE REVISED

CALCULATED-DESIGNED BY | CHECKED BY

FUNCTIONAL SUPERVISOR: ANDREW OSHRIN

STATE OF CALIFORNIA - DEPARTMENT OF TRANSPORTATION

Caltrans® **DESIGN BRANCH D**

LAST REVISION 02-08-12 | DATE PLOTTED => 17-APR-2012 | TIME PLOTTED => 09:54

Dist	COUNTY	ROUTE	POST MILES TOTAL PROJECT	SHEET No.	TOTAL SHEETS
12	Ora	55	17.0/17.7	13	39

Tan Nguyen 02-15-12
REGISTERED CIVIL ENGINEER DATE

4-16-12
PLANS APPROVAL DATE

REGISTERED PROFESSIONAL ENGINEER
TAN T NGUYEN
No. C47660
Exp. 12/31/13
CIVIL
STATE OF CALIFORNIA

THE STATE OF CALIFORNIA OR ITS OFFICERS OR AGENTS SHALL NOT BE RESPONSIBLE FOR THE ACCURACY OR COMPLETENESS OF SCANNED COPIES OF THIS PLAN SHEET.

LEGEND:

DRAINAGE SYSTEM No.

DRAINAGE UNIT

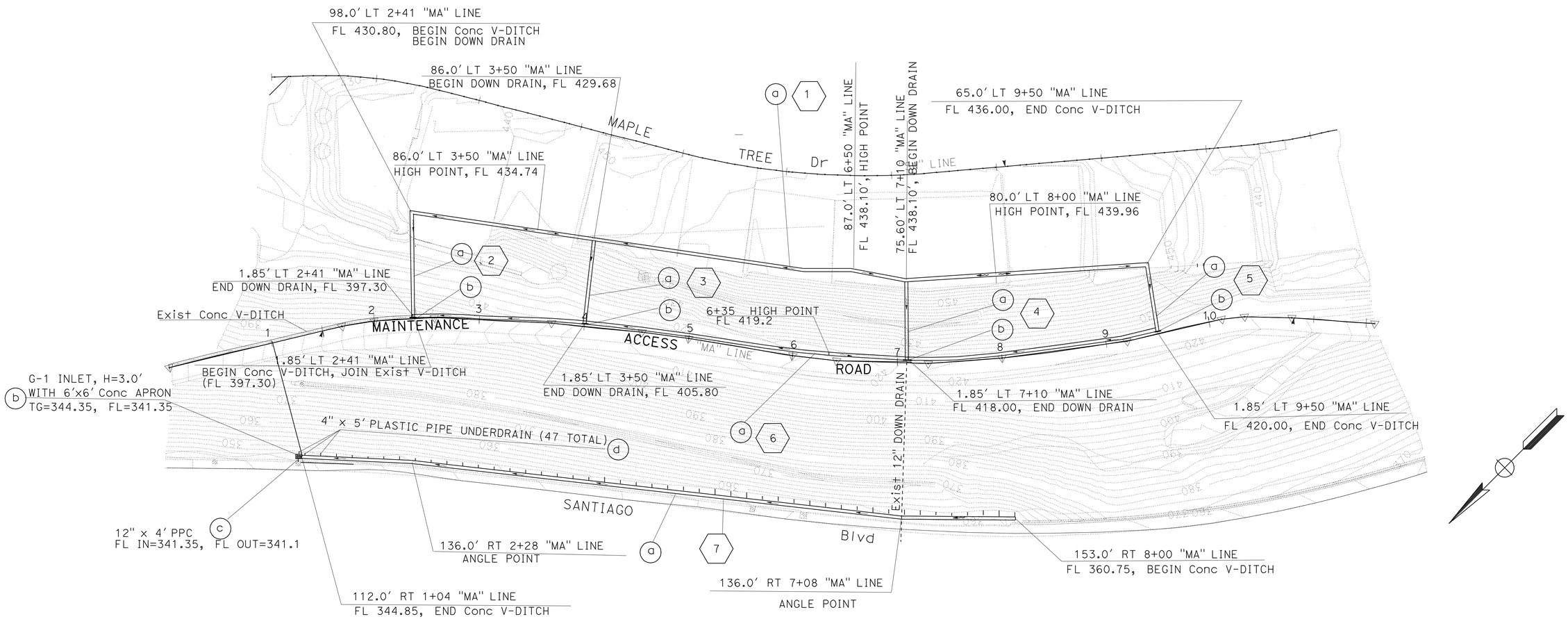

DRAINAGE PLAN

SCALE: 1" = 50'

APPROVED FOR DRAINAGE WORK ONLY

D-1

STATE OF CALIFORNIA - DEPARTMENT OF TRANSPORTATION
Caltrans
HYDRAULICS

FUNCTIONAL SUPERVISOR: KATHY LOWE
CALCULATED-DESIGNED BY: TAN T NGUYEN
CHECKED BY
REVISED BY
DATE REVISED

LAST REVISION 02-08-12
DATE PLOTTED => 17-APR-2012
TIME PLOTTED => 09:54

Dist	COUNTY	ROUTE	POST MILES TOTAL PROJECT	SHEET No.	TOTAL SHEETS
12	Ora	55	17.0/17.7	14	39

Tan Nguyen 02-15-12
REGISTERED CIVIL ENGINEER DATE

4-16-12
PLANS APPROVAL DATE

REGISTERED PROFESSIONAL ENGINEER
TAN T NGUYEN
No. C47660
Exp. 12/31/13
CIVIL
STATE OF CALIFORNIA

THE STATE OF CALIFORNIA OR ITS OFFICERS OR AGENTS SHALL NOT BE RESPONSIBLE FOR THE ACCURACY OR COMPLETENESS OF SCANNED COPIES OF THIS PLAN SHEET.

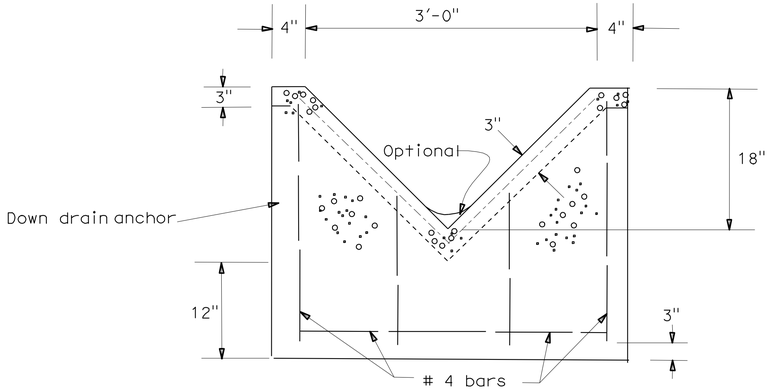

SECTION A-A

NOTES:

1. CONCRETE SHALL HAVE A MINIMUM ULTIMATE COMPRESSIVE STRENGTH AT 28 DAYS OF 2500 P.S.I.
2. REINFORCING SHALL BE 6"X 6" - W1.4XW1.4 WELDED WIRE MESH (WWM) OR APPROVED EQUAL.

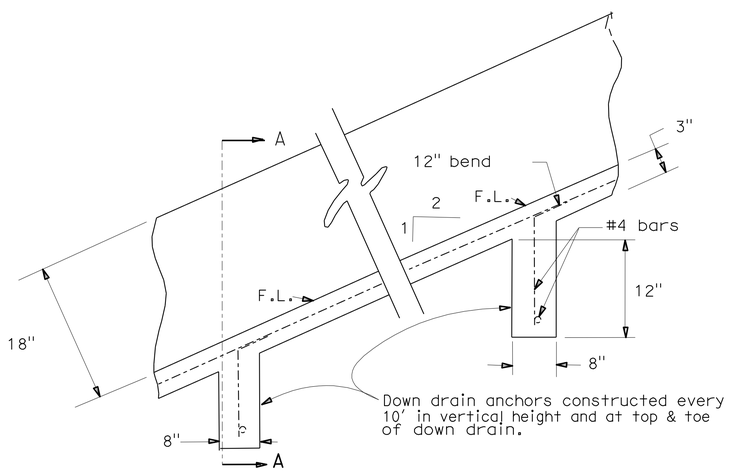

DOWN DRAIN

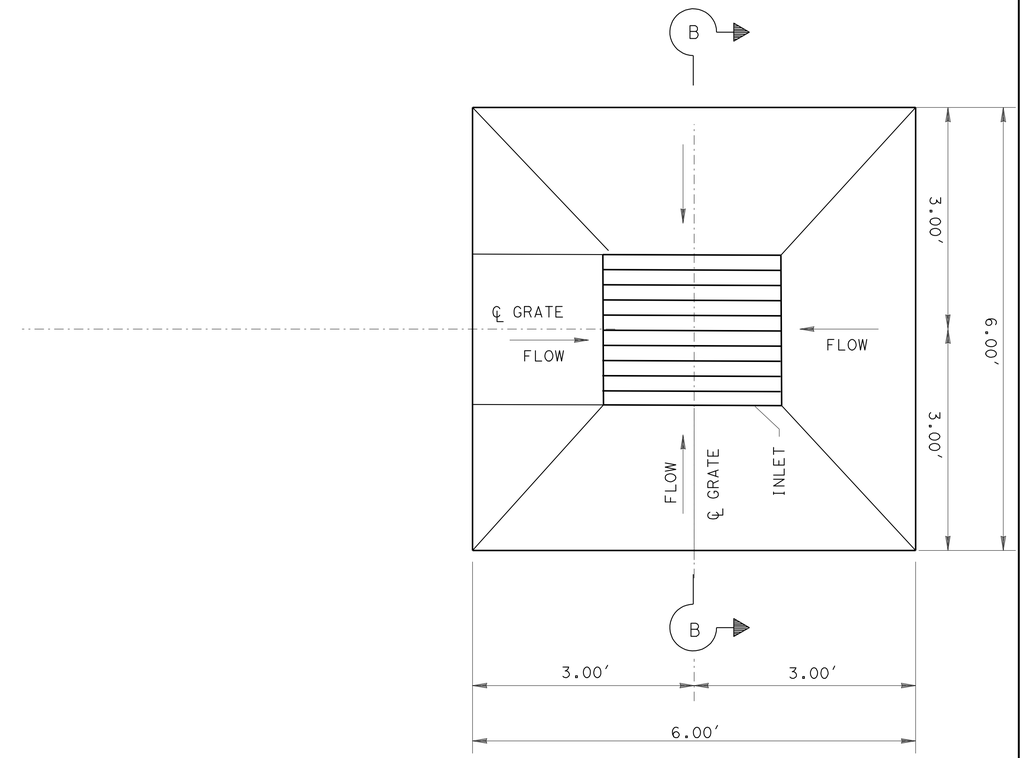

PLAN

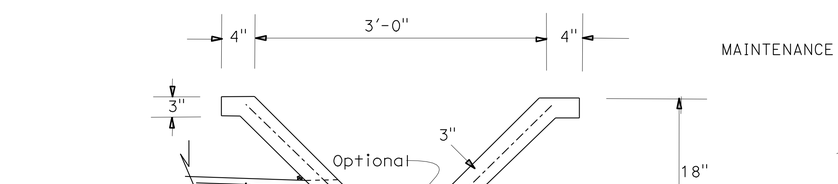

Conc V-DITCH

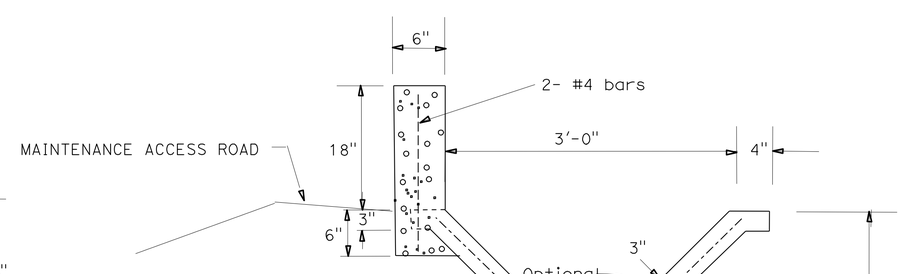

SPLASH WALL CONNECTED TO Conc V-DITCH

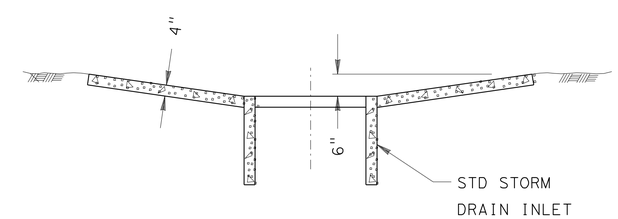

SECTION B-B

CONCRETE APRON

DRAINAGE DETAILS

NO SCALE

DD-1

REVISED BY | DATE REVISED
TAN T NGUYEN
CALCULATED-DESIGNED BY | CHECKED BY
FUNCTIONAL SUPERVISOR
KATHY LOWE

STATE OF CALIFORNIA - DEPARTMENT OF TRANSPORTATION
Caltrans
HYDRAULICS

LAST REVISION 02-08-12 | DATE PLOTTED => 17-APR-2012 | TIME PLOTTED => 09:54

Dist	COUNTY	ROUTE	POST MILES TOTAL PROJECT	SHEET No.	TOTAL SHEETS
12	Ora	55	17.0/17.7	15	39

REGISTERED CIVIL ENGINEER 02-15-12 DATE

4-16-12
PLANS APPROVAL DATE

REGISTERED PROFESSIONAL ENGINEER TAN T NGUYEN No. C47660 Exp. 12/31/13 CIVIL STATE OF CALIFORNIA

THE STATE OF CALIFORNIA OR ITS OFFICERS OR AGENTS SHALL NOT BE RESPONSIBLE FOR THE ACCURACY OR COMPLETENESS OF SCANNED COPIES OF THIS PLAN SHEET.

NOTES:

(N) NOT A SEPERATE PAY ITEM, FOR INFORMATION ONLY

DRAINAGE SYSTEM NUMBER	DRAINAGE UNIT	MINOR CONCRETE (MINOR STRUCTURE)	CONCRETE (DITCH LINNING)	DITCH EXCAVATION	4" PLASTIC PIPE UNDERDRAIN	12" PLASTIC PIPE	MISCELLANEOUS IRON AND STELL	FRAME & GRATE (24-12) (N)	DESCRIPTION	STATION	DRAINAGE PLAN SHEET NO	DRAINAGE SYSTEM NUMBER	DRAINAGE UNIT
		CY	CY	CY	LF	LF	LB	EA					
1	a		32	58.83					CONCRETE V-DITCH	98' LT 2+41 TO 65' LT 9+50 "MA" LINE	D-1	1	a
2	a		4.45	8.33					DOWN DRAIN	98' LT 2+41 TO 1.85' LT 2+41 "MA" LINE	D-1	2	a
	b	0.15							4' SPLASH WALL	0.35 LT 2+39 TO 0.35' LT 2+43 "MA" LINE			b
3	a		3.77	6.92					DOWN DRAIN	86' LT 3+50 TO 1.85' LT 3+50 "MA" LINE	D-1	3	a
	b	0.15							4' SPLASH WALL	0.35' LT 3+48 TO 0.35' LT 3+52 "MA" LINE			b
4	a		3.27	6.00					DOWN DRAIN	75.6' LT 7+10 TO 1.85' LT 7+10 "MA" LINE	D-1	4	a
	b	0.15							4' SPLASH WALL	0.35' LT 7+08 TO 0.35' LT 7+12 "MA" LINE			b
5	a		2.80	5.17					DOWN DRAIN	65' LT 9+50 TO 1.85' LT 9+50 "MA" LINE	D-1	5	a
	b	0.15							4' SPLASH WALL	0.35' LT 9+48 TO 0.35' LT 9+52 "MA" LINE			b
6	a			59.25					CONCRETE V-DITCH	98' LT 2+41 TO 65' LT 9+50 "MA" LINE	D-1	6	a
7	a		30.9	56.75					CONCRETE V-DITCH	135' RT 2+28 TO 153 RT 8+00 "MA" LINE		7	a
	b	1.35					326	1	G-1 WITH 6'X6' Conc APRON	112' RT 1+04 "MA" LINE			b
	c					4			12" PLASTIC PIPE	112' RT 1+04 "MA" LINE			c
	d				240				4" PLASTIC PIPE UNDERDRAIN	135' RT 2+28 TO 153 RT 8+00 "MA" LINE			d
SHEET TOTAL		1.95	109.5	201.7	240	4	326	1					

DRAINAGE QUANTITIES

DQ-1

STATE OF CALIFORNIA - DEPARTMENT OF TRANSPORTATION
Caltrans
HYDRAULICS

FUNCTIONAL SUPERVISOR: KATHY LOWE

CALCULATED-DESIGNED BY: JOE KAO
CHECKED BY: TAN T NGUYEN

REVISED BY
DATE REVISED

LAST REVISION 02-08-12
DATE PLOTTED => 24-APR-2012
TIME PLOTTED => 10:22

Dist	COUNTY	ROUTE	POST MILES TOTAL PROJECT	SHEET No.	TOTAL SHEETS
12	Ora	55	17.0/17.7	16	39

Brandon Tran 02-15-12
REGISTERED CIVIL ENGINEER DATE

4-16-12
PLANS APPROVAL DATE

REGISTERED PROFESSIONAL ENGINEER
BRANDON TRAN
No. C58283
Exp. 6/30/12
CIVIL
STATE OF CALIFORNIA

THE STATE OF CALIFORNIA OR ITS OFFICERS OR AGENTS SHALL NOT BE RESPONSIBLE FOR THE ACCURACY OR COMPLETENESS OF SCANNED COPIES OF THIS PLAN SHEET.

NOTE:

1. FOR ACCURATE RIGHT OF WAY AND ACCESS DATA, CONTACT RIGHT OF WAY OFFICE AT THE DISTRICT OFFICE.
2. LOCATIONS OF UTILITY FACILITIES SHOWN WERE OBTAINED FROM OWNER RECORDS AND/OR FROM STATE RECORDS OR SURVEYS.
3. NO GRADING SHALL BE WITHIN 2′ OF UTILITIES THAT ARE PROTECTED IN PLACE.

ABBREVIATIONS:

SCG - SOUTHERN CALIFORNIA GAS COMPANY
AT&T - AMERICAN TELEGRAPH AND TELEPHONE COMPANY

UTILITY OWNERSHIP:

SCG
AT&T

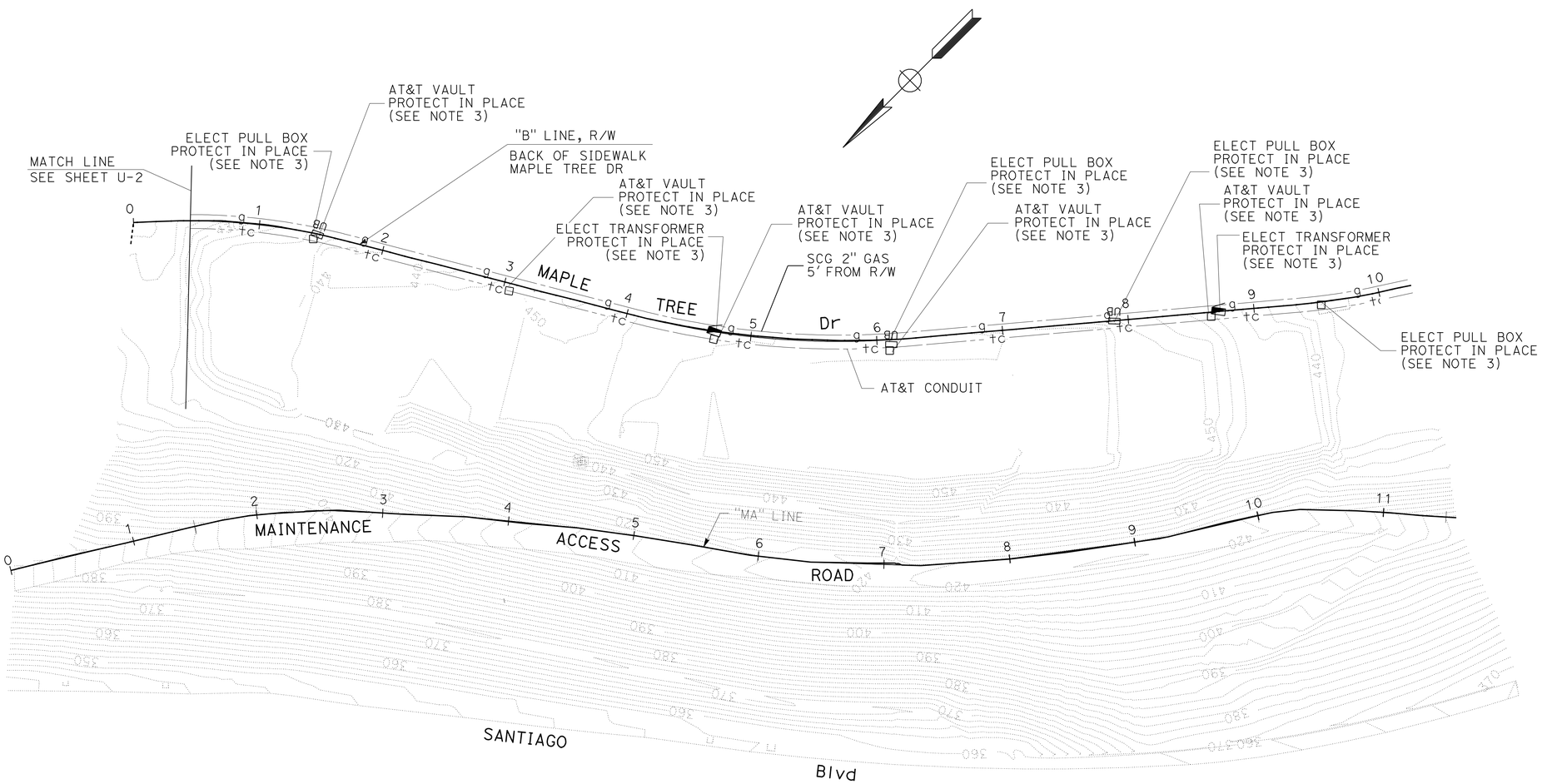

UTILITY PLAN (EXISTING)

SCALE: 1" = 50′

APPROVED FOR UTILITY INFORMATION ONLY.

U-1

STATE OF CALIFORNIA - DEPARTMENT OF TRANSPORTATION
Caltrans UTILITY ENGINEERING

FUNCTIONAL SUPERVISOR: CHRISTOPHER LE
CALCULATED-DESIGNED BY
CHECKED BY
REVISED BY
DATE REVISED

LAST REVISION 02-08-12
DATE PLOTTED => 17-APR-2012
TIME PLOTTED => 09:55

Dist	COUNTY	ROUTE	POST MILES TOTAL PROJECT	SHEET No.	TOTAL SHEETS
12	Ora	55	17.0/17.7	17	39

Brandon Tran 02-15-12
REGISTERED CIVIL ENGINEER DATE

4-16-12
PLANS APPROVAL DATE

REGISTERED PROFESSIONAL ENGINEER
BRANDON TRAN
No. C58283
Exp. 6/30/12
CIVIL
STATE OF CALIFORNIA

THE STATE OF CALIFORNIA OR ITS OFFICERS OR AGENTS SHALL NOT BE RESPONSIBLE FOR THE ACCURACY OR COMPLETENESS OF SCANNED COPIES OF THIS PLAN SHEET.

NOTE:

1. FOR ACCURATE RIGHT OF WAY AND ACCESS DATA, CONTACT RIGHT OF WAY OFFICE AT THE DISTRICT OFFICE.
2. LOCATIONS OF UTILITY FACILITIES SHOWN WERE OBTAINED FROM OWNER RECORDS AND/OR FROM STATE RECORDS OR SURVEYS.
3. NO GRADING SHALL BE WITHIN 2' OF UTILITIES THAT ARE PROTECTED IN PLACE.

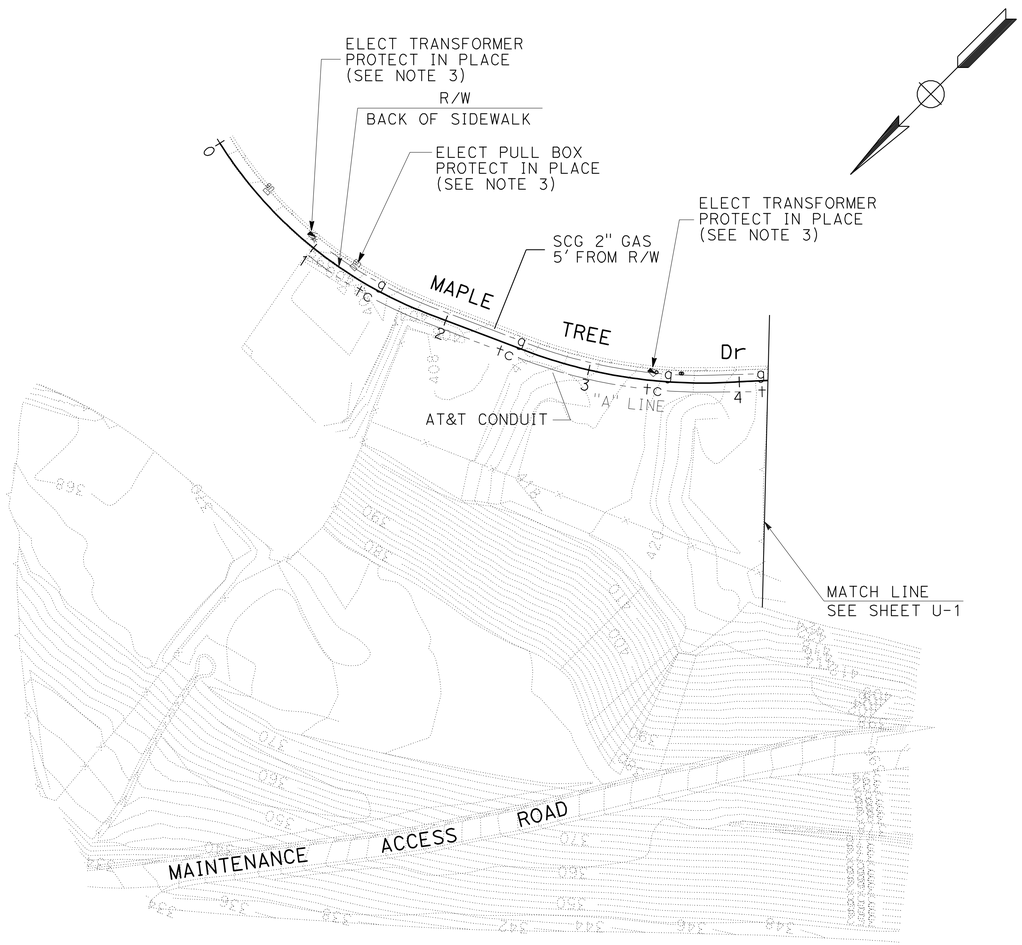

UTILITY PLAN
(EXISTING)

SCALE: 1" = 50'

APPROVED FOR UTILITY INFORMATION ONLY.

U-2

STATE OF CALIFORNIA - DEPARTMENT OF TRANSPORTATION
Caltrans® UTILITY ENGINEERING

FUNCTIONAL SUPERVISOR: CHRISTOPHER LE

CALCULATED-DESIGNED BY
CHECKED BY

REVISED BY
DATE REVISED

LAST REVISION 02-08-12 | DATE PLOTTED => 17-APR-2012 | TIME PLOTTED => 09:55

Dist	COUNTY	ROUTE	POST MILES TOTAL PROJECT	SHEET No.	TOTAL SHEETS
12	Ora	55	17.0/17.7	18	39

REGISTERED CIVIL ENGINEER 02-15-12 DATE

4-16-12
PLANS APPROVAL DATE

REGISTERED PROFESSIONAL ENGINEER
ALLEN SOOFI
No. 49735
Exp. 9/30/12
CIVIL
STATE OF CALIFORNIA

THE STATE OF CALIFORNIA OR ITS OFFICERS OR AGENTS SHALL NOT BE RESPONSIBLE FOR THE ACCURACY OR COMPLETENESS OF SCANNED COPIES OF THIS PLAN SHEET.

NOTES:

1. LOCATIONS OF CONSTRUCTION AREA SIGNS ARE APPROXIMATE. EXACT LOCATIONS AND MESSAGE TO BE DETERMINED BY THE ENGINEER.
2. FOR ADDITIONAL QUANTITIES OF CONSTRUCTION AREA SIGNS, SEE SHEET TH2-1.

ABBREVIATION:

PCMS PORTABLE CHANGEABLE MESSAGE SIGN

LEGEND:

- (1) PCMS NO.
- PCMS — PCMS
- • PCMS LOCATION
- 1 — CONSTRUCTION AREA SIGN NUMBER
- ⊣ CONSTRUCTION AREA SIGN 1-POST

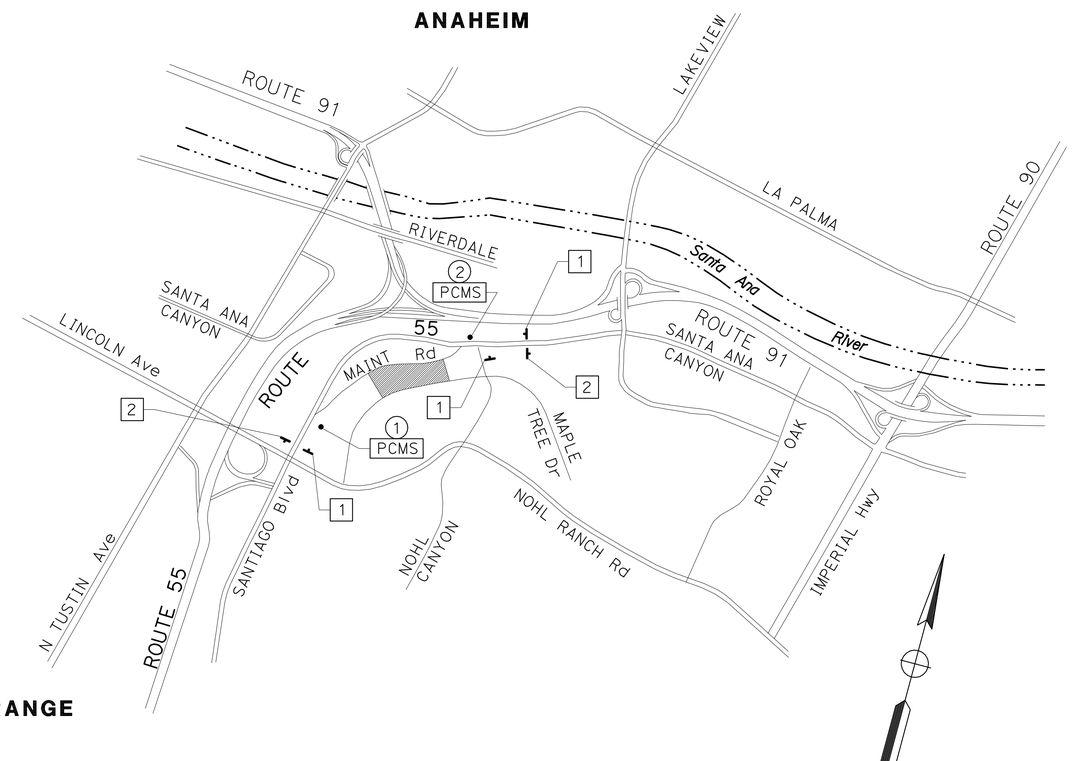

PORTABLE CHANGEABLE MESSAGE SIGN

PMCS No.	FRAME	SIGN MESSAGE
PMCS-1	1ST FRAME	ROAD CONSTRUCTION SANTIAGO BLVD
	2ND FRAME	FROM _____ TO _____
PMCS-2	1ST FRAME	ROAD CONSTRUCTION SANTIAGO BLVD
	2ND FRAME	FROM _____ TO _____

CONSTRUCTION AREA SIGNS STATIONARY MOUNTED

SIGN No.	TYPE	PANEL SIZE (in)	SIGN MESSAGE	No. OF POSTS AND SIZE (in)	No. OF SIGNS
1	W20-1	36 x 36	ROAD WORK AHEAD	(1) 6 x 6	3
2	G20-2	36 x 18	END ROAD WORK	(1) 6 x 6	2

CONSTRUCTION AREA SIGNS

NO SCALE

APPROVED FOR CONSTRUCTION AREA SIGN WORK ONLY

CS-1

STATE OF CALIFORNIA - DEPARTMENT OF TRANSPORTATION
Caltrans
DESIGN BRANCH D
FUNCTIONAL SUPERVISOR: ANDREW OSHRIN
CALCULATED-DESIGNED BY
CHECKED BY
REVISED BY
DATE REVISED

LAST REVISION 02-08-12
DATE PLOTTED => 17-APR-2012
TIME PLOTTED => 09:55

Dist	COUNTY	ROUTE	POST MILES TOTAL PROJECT	SHEET No.	TOTAL SHEETS
12	Ora	55	17.0/17.7	19	39

REGISTERED CIVIL ENGINEER 03-19-12 DATE

4-16-12
PLANS APPROVAL DATE

REGISTERED PROFESSIONAL ENGINEER ALLEN SOOFI No. 49735 Exp. 9/30/12 CIVIL STATE OF CALIFORNIA

THE STATE OF CALIFORNIA OR ITS OFFICERS OR AGENTS SHALL NOT BE RESPONSIBLE FOR THE ACCURACY OR COMPLETENESS OF SCANNED COPIES OF THIS PLAN SHEET.

RETAINING WALL AND SIDEWALK REMOVAL QUANTITIES

SHEET No.	PARTIAL REMOVAL BURIED SOIL NAIL WALL	REMOVE RETAINING WALL	REMOVE CONCRETE SIDEWALK AND DRWY	REMOVE PARKWAY TREE (N)
	SQFT	CY	SQFT	EA
L-1	6,000			
C-1		275		
C-4			12,447	7
TOTAL	6,000	275	12,447	7

(N) NOT A SEPARATE PAY ITEM, FOR INFORMATION ONLY.

EARTHWORK QUANTITIES

SHEET No.	STATION LIMITS	ROADWAY EXCAVATION	EMBANKMENT (N)
		CY	CY
L-1	"MA" 1+50 to "MA" 10+80	38,691	28
L-2	"A" 1+50 to "A" 4+00	872	195
TOTAL		39,563	223

(N) NOT A SEPARATE PAY ITEM, FOR INFORMATION ONLY.

CONCRETE CURB, GUTTER, DRIVEWAY AND SIDEWALK QUANTITIES

SHEET No.	MINOR CONCRETE (CURB AND GUTTER)	MINOR CONCRETE (DRIVEWAY)	MINOR CONCRETE (SIDEWALK)	CLASS 2 AGGREGATE BASE
	CY	CY	CY	CY
C-4	23	8	149	15
TOTAL	23	8	149	15

FENCE AND GATE QUANTITIES

SHEET No.	REMOVE CHAIN LINK FENCE	STEEL TUBE FENCE	STEEL TUBE GATE
	LF	LF	EA
C-1	1,331	1,544	2
TOTAL	1,331	1,544	2

HORIZONTAL DRAIN QUANTITIES

SHEET No.	HORIZONTAL DRAIN No.	4 IN DIA PLASTIC PIPE HORIZONTAL DRAIN	4 IN DIA SLOTTED CORRUGATED PLASTIC PIPE HORIZONTAL DRAIN
		LF	LF
C-2	H-1	20	110
	H-2	20	123
	H-3	20	134
	H-4	20	147
	H-5	20	380
	H-6	20	380
	H-7	20	395
	H-8	20	369
	H-9	20	347
	H-10	20	334
	H-11	20	324
	H-12	20	317
	H-13	20	313
	H-14	20	312
	H-15	20	311
	H-16	20	309
	H-17	20	307
	H-18	20	305
	H-19	20	302
	H-20	20	300
	H-21	20	297
	H-22	20	294
	H-23	20	292
	H-24	20	290
	H-25	20	289
	H-26	20	288
	H-27	20	287
	H-28	20	286
	H-29	20	286
	H-30	20	286
SUB-TOTAL		600	8,714

HORIZONTAL DRAIN QUANTITIES

SHEET No.	HORIZONTAL DRAIN No.	4 IN DIA PLASTIC PIPE HORIZONTAL DRAIN	4 IN DIA SLOTTED CORRUGATED PLASTIC PIPE HORIZONTAL DRAIN
		LF	LF
C-2	H-31	20	286
	H-32	20	287
	H-33	20	288
	H-34	20	289
	H-35	20	291
	H-36	20	293
	H-37	20	295
	H-38	20	297
	H-39	20	299
	H-40	20	301
	H-41	20	303
	H-42	20	305
	H-43	20	307
	H-44	20	309
	H-45	20	311
	H-46	20	313
	H-47	20	315
	H-48	20	317
	H-49	20	320
	H-50	20	322
	H-51	20	324
	H-52	20	325
	H-53	20	327
	H-54	20	328
SUB-TOTAL		480	7,352
TOTAL		1,080	16,066

SUMMARY OF QUANTITIES

Q-1

REVISED BY | DATE REVISED
CALCULATED-DESIGNED BY | CHECKED BY
FUNCTIONAL SUPERVISOR: ANDREW OSHRIN

STATE OF CALIFORNIA - DEPARTMENT OF TRANSPORTATION
Caltrans® DESIGN BRANCH D

LAST REVISION 02-08-12 | DATE PLOTTED => 17-APR-2012 | TIME PLOTTED => 09:55

Dist	COUNTY	ROUTE	POST MILES TOTAL PROJECT	SHEET No.	TOTAL SHEETS
12	Ora	55	17.0/17.7	20	39

LICENSED LANDSCAPE ARCHITECT 03-19-12

4-16-12
PLANS APPROVAL DATE

LICENSED LANDSCAPE ARCHITECT — MATTHEW J. CASLAVKA — Signature — 10-31-13 Renewal Date — 03-19-12 Date — STATE OF CALIFORNIA

THE STATE OF CALIFORNIA OR ITS OFFICERS OR AGENTS SHALL NOT BE RESPONSIBLE FOR THE ACCURACY OR COMPLETENESS OF SCANNED COPIES OF THIS PLAN SHEET.

ABBREVIATIONS

AMEND — amendment
B & B — balled and burlapped
Dia — diameter
EA — each
LB — pound
Oz — ounce
Ft — foot/feet
SQFT — square feet
SQYD — square yard
CF — cubic feet
Max — maximum
Min — minimum
NCN — no common name
No. — number
Pkt — packet
PLT ESTB — plant establishment
Pvmt — pavement
R/W — right of way
SF — state furnished
TRVD — traveled

APPLICABLE WHEN CIRCLED:

1 - Quantities shown are "per plant" unless shown as SQFT or SQYD application rates.
2 - Sufficient to receive root ball.
3 - Does not apply to mulch areas.
4 - As shown on plans.
5 - Unless otherwise shown on plans.
6 - See detail.
7 - See Special Provisions.

PLANT LIST AND PLANTING SPECIFICATIONS

NOTE:

Underlined portions of botanical name indicate abbreviations used on Planting Plans.

PLANT GROUP	PLANT No.	SYMBOL	BOTANICAL NAME	COMMON NAME	SIZE	QUANTITY EACH	HOLE SIZE (INCH) Dia	HOLE SIZE (INCH) DEPTH	BASIN TYPE	IRON SULFATE	SOIL AMEND	COMMERCIAL FERTILIZER PLANTING	COMMERCIAL FERTILIZER PLT ESTB	BASIN MULCH	STAKING	PLANTING LIMITS MINIMUM DISTANCE (Ft) FROM TRVD WAY	PVMT	FENCE	WALL	PAVED DITCH	EARTH DITCH	ON CENTER (Ft)	REMARKS
A	1		CALLIANDRA CALIFORNICA	BAJA FAIRY DUSTER	No. 1	56	2	2	II	—	—	—	—	X	—	—	8	8	6	6	6	—	4
	2		LEUCOPHYLLUM FRUTESCENS	TEXAS RANGER	No. 1	73	2	2	II	—	—	—	—	X	—	—	8	6	6	6	8	—	4
	3		SALVIA LEUCANTHA	SAGE	No. 1	82	2	2	II	—	—	—	—	X	—	—	8	6	6	6	8	—	4
	4		TECOMA STANS	YELLOW BELLS	No. 1	51	2	2	II	—	—	—	—	X	—	—	15	8	8	8	10	—	4
B	5		ARBUTUS UNEDO	STRAWBERRY TREE	No. 5	6	2	2	II	—	—	—	—	X	—	—	15	15	15	12	12	—	4
	6		HETEROMELES ARBUTIFOLIA	TOYON	No. 5	29	2	2	II	—	—	—	—	X	—	—	15	15	10	10	12	—	4
	7		MELALEUCA NESOPHILA	PINK MELALEUCA	No. 5	49	2	2	II	—	—	—	—	X	—	—	15	15	15	15	17	—	4
F	8		ARCTOSTAPHYLOS 'EMERALD CARPET'	MANZANITA	FLAT	4462	2	2	—	—	—	—	—	—	—	—	—	—	—	—	—	3	4
	9		CEANOTHUS GRISEUS HORIZONTALIS	CARMEL CREEPER	FLAT	1670	2	2	—	—	—	—	—	—	—	—	—	—	—	—	—	5	4
	10		LANTANA MONTEVIDENSIS 'CONFETTI'	LANTANA	FLAT	989	2	2	—	—	—	—	—	—	—	—	—	—	—	—	—	5	4

LEGEND:

EROSION CONTROL (HYDROSEED) AND EROSION CONTROL (MULCH)

GRAVEL (MISCELLANEOUS AREAS)

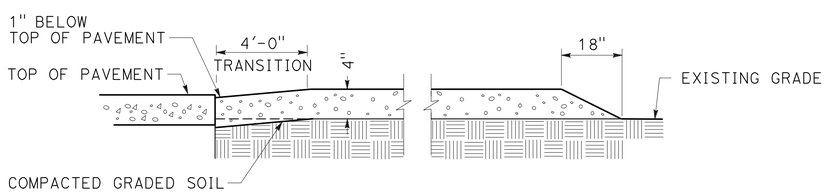

GRAVEL MISCELLANEOUS AREAS

NO SCALE — SECTION

STATE OF CALIFORNIA - DEPARTMENT OF TRANSPORTATION
Caltrans
LANDSCAPE ARCHITECTURE
SENIOR LANDSCAPE ARCHITECT: ERIC DICKSON
CALCULATED-DESIGNED BY: MATTHEW CASLAVKA
CHECKED BY: JARED GODETT
REVISED BY
DATE REVISED

PLANT LIST

PL-1

LAST REVISION 00-00-00
DATE PLOTTED => 17-APR-2012
TIME PLOTTED => 09:55

Dist	COUNTY	ROUTE	POST MILES TOTAL PROJECT	SHEET No.	TOTAL SHEETS
12	Ora	55	17.0/17.7	21	39

03-19-12
LICENSED LANDSCAPE ARCHITECT

4-16-12
PLANS APPROVAL DATE

LICENSED LANDSCAPE ARCHITECT
MATTHEW J CASLAVKA 3024
Expiration Date 10-31-13
Renewal Date 03-19-12
Date
STATE OF CALIFORNIA

THE STATE OF CALIFORNIA OR ITS OFFICERS OR AGENTS SHALL NOT BE RESPONSIBLE FOR THE ACCURACY OR COMPLETENESS OF SCANNED COPIES OF THIS PLAN SHEET.

NOTE:

FOR ACCURATE RIGHT OF WAY DATA, CONTACT RIGHT OF WAY ENGINEERING AT THE DISTRICT OFFICE.

* QUANTITY SHOWN REPRESENTS TOTAL ON EACH PAGE

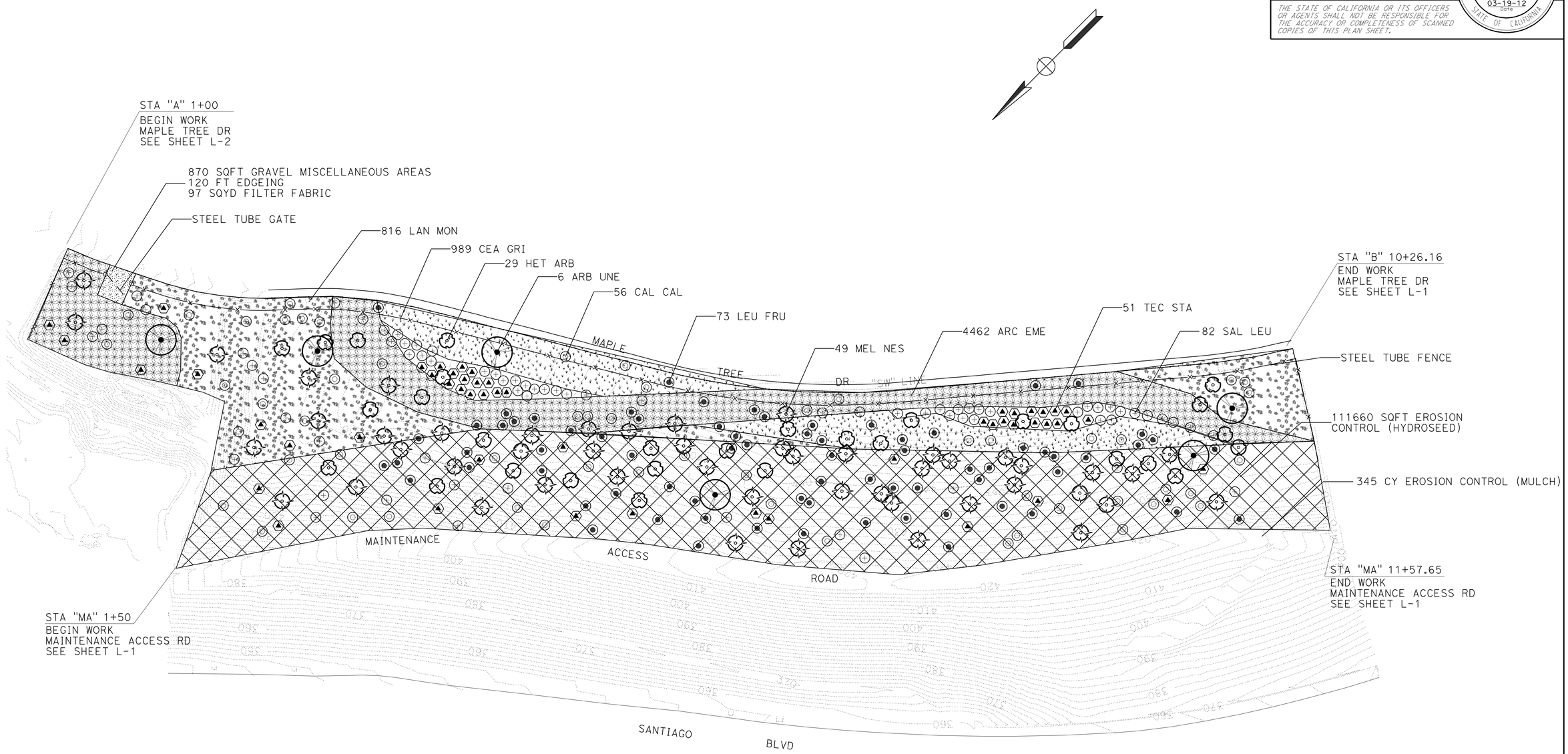

APPROVED FOR PLANTING WORK ONLY

PLANTING PLAN

SCALE: 1" = 50' **PP-1**

STATE OF CALIFORNIA - DEPARTMENT OF TRANSPORTATION
Caltrans®
LANDSCAPE ARCHITECTURE

SENIOR LANDSCAPE ARCHITECT: ERIC DICKSON
CALCULATED-DESIGNED BY: MATTHEW CASLAVKA
CHECKED BY: JARED GODETT
REVISED BY
DATE REVISED

LAST REVISION 00-00-00
DATE PLOTTED => 17-APR-2012
TIME PLOTTED => 09:55

Dist	COUNTY	ROUTE	POST MILES TOTAL PROJECT	SHEET No.	TOTAL SHEETS
12	Ora	55	17.0/17.7	22	39

LICENSED LANDSCAPE ARCHITECT 03-19-12

4-16-12
PLANS APPROVAL DATE

LICENSED LANDSCAPE ARCHITECT
MATTHEW J CASLAVKA 3024
Signature
10-31-13
Renewal Date
03-19-12
Date
STATE OF CALIFORNIA

THE STATE OF CALIFORNIA OR ITS OFFICERS OR AGENTS SHALL NOT BE RESPONSIBLE FOR THE ACCURACY OR COMPLETENESS OF SCANNED COPIES OF THIS PLAN SHEET.

NOTE:

FOR ACCURATE RIGHT OF WAY DATA, CONTACT RIGHT OF WAY ENGINEERING AT THE DISTRICT OFFICE.

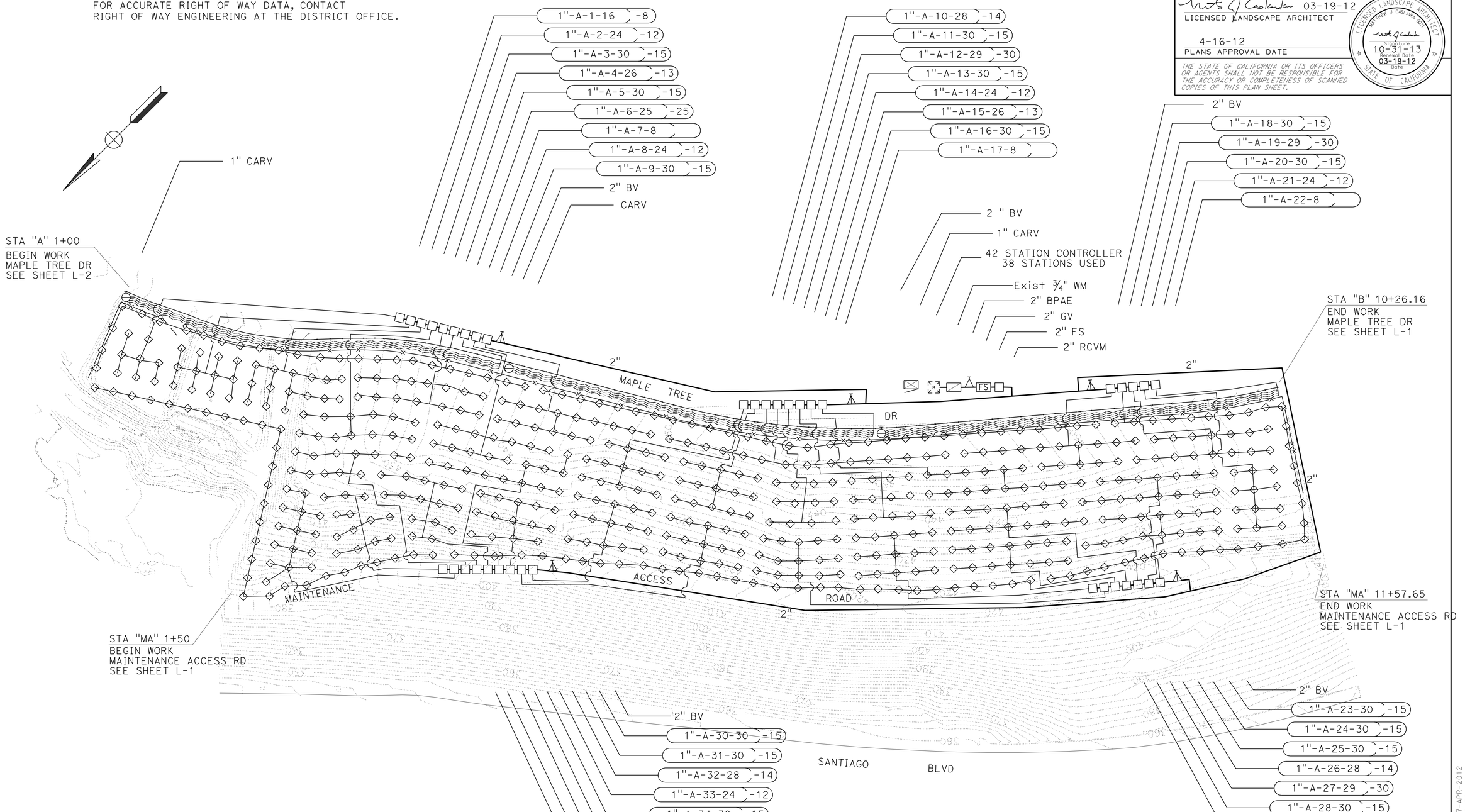

IRRIGATION PLAN

SCALE: 1" = 50'

IP-1

APPROVED FOR IRRIGATION WORK ONLY

STATE OF CALIFORNIA - DEPARTMENT OF TRANSPORTATION
Caltrans®
LANDSCAPE ARCHITECTURE

SENIOR LANDSCAPE ARCHITECT: ERIC DICKSON

JARED GODETT | MATTHEW CASLAVKA

CALCULATED-DESIGNED BY | CHECKED BY

REVISED BY | DATE REVISED

LAST REVISION 00-00-00

DATE PLOTTED => 17-APR-2012
TIME PLOTTED => 09:56

Dist	COUNTY	ROUTE	POST MILES TOTAL PROJECT	SHEET No.	TOTAL SHEETS
12	Ora	55	17.0/17.7	23	39

03-19-12
LICENSED LANDSCAPE ARCHITECT

4-16-12
PLANS APPROVAL DATE

LICENSED LANDSCAPE ARCHITECT
MATTHEW J. CASLAVKA 3024
Signature
10-31-13
Renewal Date
03-19-12
Date
STATE OF CALIFORNIA

THE STATE OF CALIFORNIA OR ITS OFFICERS OR AGENTS SHALL NOT BE RESPONSIBLE FOR THE ACCURACY OR COMPLETENESS OF SCANNED COPIES OF THIS PLAN SHEET.

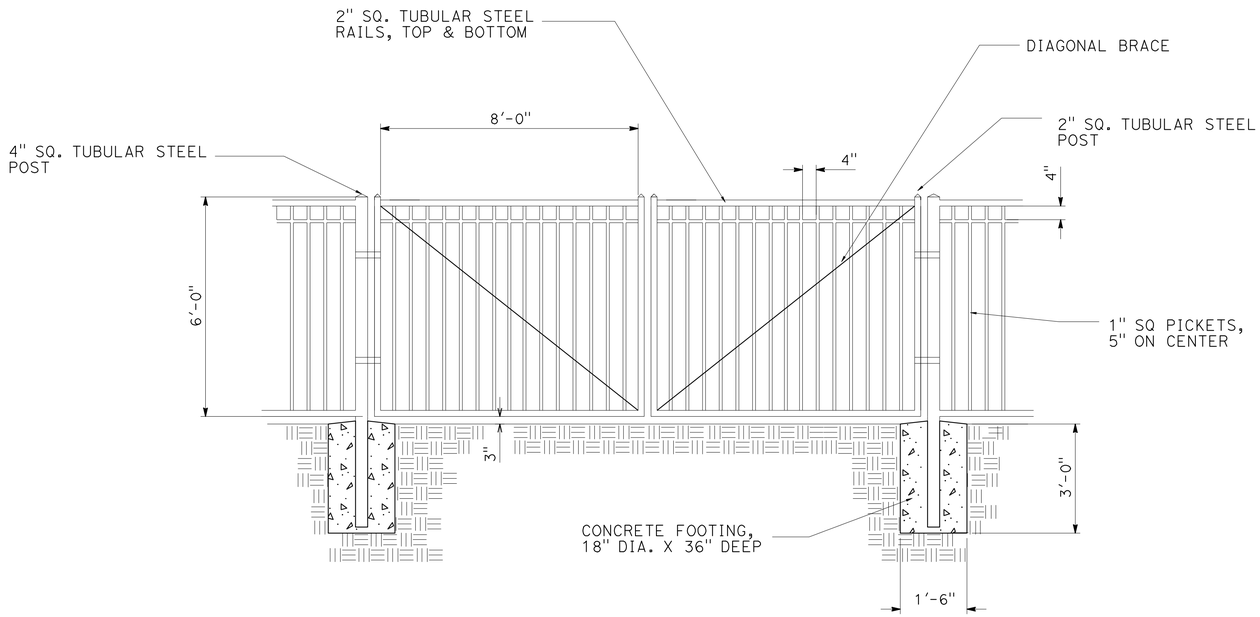

STEEL TUBE GATE

NO SCALE

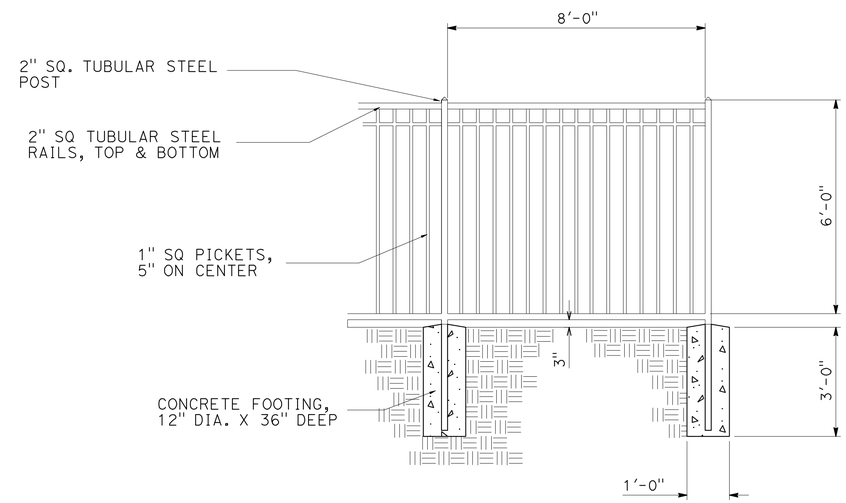

STEEL TUBE FENCE

NO SCALE

LANDSCAPE DETAILS

NO SCALE

LD-1

STATE OF CALIFORNIA - DEPARTMENT OF TRANSPORTATION
Caltrans®
LANDSCAPE ARCHITECTURE

SENIOR LANDSCAPE ARCHITECT: ERIC DICKSON
CALCULATED-DESIGNED BY: JARED GODETT
CHECKED BY: MATTHEW CASLAVKA
REVISED BY
DATE REVISED

LAST REVISION 00-00-00
DATE PLOTTED => 17-APR-2012
TIME PLOTTED => 10:24

Dist	COUNTY	ROUTE	POST MILES TOTAL PROJECT	SHEET No.	TOTAL SHEETS
12	Ora	55	17.0/17.7	24	39

LICENSED LANDSCAPE ARCHITECT 03-19-12

4-16-12
PLANS APPROVAL DATE

LICENSED LANDSCAPE ARCHITECT MATTHEW J. CASLAVKA 3024 Signature 10-31-13 Renewal Date 03-19-12 Date STATE OF CALIFORNIA

THE STATE OF CALIFORNIA OR ITS OFFICERS OR AGENTS SHALL NOT BE RESPONSIBLE FOR THE ACCURACY OR COMPLETENESS OF SCANNED COPIES OF THIS PLAN SHEET.

SPRINKLER SCHEDULE

SYMBOL	TYPE	DESCRIPTION	SPRAY PATTERN	OPERATING PRESSURE (PSI)	PRESSURE COMPENSATING	PLUS/MINUS 5% ② DISCHARGE GALLONS PER MINUTE (GPM)	RADIUS (Ft)	WIDTH x LENGTH (Ft)	MATERIAL	INLET CONNECTION (NPT INCH)	POSITIVE-LOCKING Adj ARC STOP	BACKSPLASH PREVENTER	DIFFUSER PIN	DISTANCE CONTROL FLAP	CHECK VALVE	RISER TYPE	RISER MATERIAL PLASTIC	RISER MATERIAL GALVANIZED	RISER SIZE (IPS INCH)	RISER HEIGHT (INCH)	RISER FLOW SHUTOFF DEVICE	⑤ SWING JOINT (TYPE)	RISER SUPPORT	SPRINKLER PROTECTOR (TYPE)	REMARKS
◇	B-5	STREAM SPRAY	F/P	45	—	1.96/0.98	18	—	PL	½	—	—	—	—	X	I	X	—	½	18	X	III	—	—	

X IN BOX DENOTES REQUIREMENT

APPLICABLE WHEN CIRCLED BELOW:

1 - See Special Provisions.
2 - If a pressure compensating device is specified, the discharge and radii shown reflect its use.
3 - Arc Stop shall be fitted with a nut and bolt.
4 - Vinyl-coated cast iron housing.
⑤ - Swing Joints required adjacent to shoulders, curbs, sidewalks, and dikes.
6 - Unless otherwise shown on plans.

ABBREVIATIONS:

F — full circle
P — part circle
F/P — full/part circle
Q — quarter circle
T — third circle
H — half circle
TT — two third circle
TQ — three quarter circle
CST — center strip
SST — side strip
EST — end strip
Ft — feet/foot
GPM — gallons per minute
GPH — gallons per hour
Adj — adjustable
PL — plastic
B/B — brass/bronze
B/PL — brass/plastic
B/B/PL — brass/bronze/plastic
NPT — national pipe thread
IPS — iron pipe size
PSI — pounds per square inch

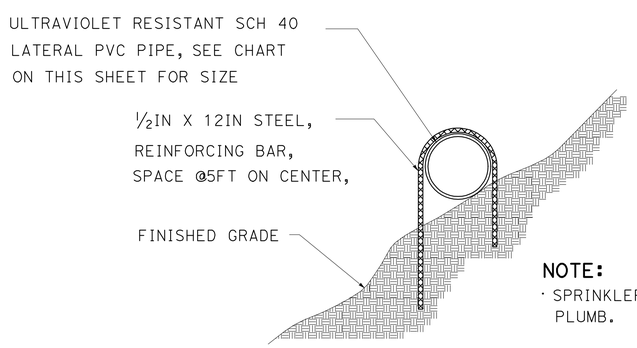

NOTE:
· SPRINKLER HEAD ASSEMBLY TO BE INSTALLED PLUMB.

PIPE ON GRADE

1 in	1¼ in	1½ in	2 in
0-12 gal/min	13-22 gal/min	23-30 gal/min	31-50 gal/min

PIPE SIZING CHART ALL SPRINKLERS (PVC SCH 40) (SIZE LATERAL LINE)

SPRINKLER SCHEDULE

NO SCALE

LD-2

REVISED BY | DATE REVISED
JARED GODETT | MATTHEW CASLAVKA
CALCULATED-DESIGNED BY | CHECKED BY
SENIOR LANDSCAPE ARCHITECT | ERIC DICKSON
STATE OF CALIFORNIA - DEPARTMENT OF TRANSPORTATION
Caltrans
LANDSCAPE ARCHITECTURE

LAST REVISION 00-00-00 | DATE PLOTTED => 17-APR-2012 | TIME PLOTTED => 09:56

Dist	COUNTY	ROUTE	POST MILES TOTAL PROJECT	SHEET No.	TOTAL SHEETS
12	Ora	55	17.0/17.7	25	39

LICENSED LANDSCAPE ARCHITECT 03-19-12

4-16-12
PLANS APPROVAL DATE

LICENSED LANDSCAPE ARCHITECT
MATTHEW J CASLAVKA 3014
Expiration Date 10-31-13
Renewal Date 03-19-12
Date
STATE OF CALIFORNIA

THE STATE OF CALIFORNIA OR ITS OFFICERS OR AGENTS SHALL NOT BE RESPONSIBLE FOR THE ACCURACY OR COMPLETENESS OF SCANNED COPIES OF THIS PLAN SHEET.

ABBREVIATIONS:

CARV–combination air release valve
EA—each
DIP—ductile iron pipe
GSP—galvanized steel pipe
Ft—foot/feet
PR—pressure rated

SUBTOTALS PER VALVE ON LATERAL SUPPLY SIDE OF CONTROL VALVE

DESCRIPTION		UNIT	VALVE OR ASSEMBLY NUMBER (CONTROLLER A) 1	2	3	4	5	6	7	8	9	10	11	12	13	14	15	16	17	18	19	20	21	22	23	24	25	26	27	28	29	30	31	32	33	34	35	36	37	38	SUBTOTALS	UNIT	DESCRIPTION		
PLASTIC PIPE SUPPLY LINE	UVR-PVC SCH 40	1 In	Ft	120	220	260	240	240	350	75	220	280	240	260	480	230	210	280	180	80	280	270	260	240	150	260	260	260	240	260	260	260	260	240	220	240	265	190	240	210	9350	Ft	1 In	UVR-PVC SCH 40	PLASTIC PIPE SUPPLY LINE
		1¼ In	Ft	315	260		20	20	195				20	20	100	60	20	20	40		20	200	20	20		20	20	20	20	220	20	20	20	25	20		20	210	20	40	20	2085	Ft	1¼ In		
		1½ In	Ft			200	180	60	30		130	130	170	80	20	60	95	100	240		120	160	120	200		50	100	190	150	240	360	225	100	215	30	175	100	190	190	200	100	4710	Ft	1½ In		
PLASTIC PIPE (IRRIGATION LINE)		½In 24 In SPACING	Ft							1600										1600					1600																	4800	Ft	½In 24 In SPACING	PLASTIC PIPE (IRRIGATION LINE)	
SPRINKLER TYPE		B-5	Ea	8	12	15	13	15	25		12	15	14	15	30	15	12	13	15		15	30	15	12		15	15	15	14	30	15	15	15	15	14	12	15	30	12	15	13	561	Ea	B-5	SPRINKLER TYPE	
CARV		1 In	Ea							1										1					1																	3	Ea	1 In	CARV	

IRRIGATION QUANTITIES

IQ-1

STATE OF CALIFORNIA - DEPARTMENT OF TRANSPORTATION
Caltrans
LANDSCAPE ARCHITECTURE

SENIOR LANDSCAPE ARCHITECT: ERIC DICKSON
CALCULATED-DESIGNED BY: JARED GODETT
CHECKED BY: MATTHEW CASLAVKA
REVISED BY
DATE REVISED

LAST REVISION 00-00-00
DATE PLOTTED => 17-APR-2012
TIME PLOTTED => 09:56

Dist	COUNTY	ROUTE	POST MILES TOTAL PROJECT	SHEET No.	TOTAL SHEETS
12	Ora	55	17.0/17.7	26	39

LICENSED LANDSCAPE ARCHITECT 03-19-12

4-16-12
PLANS APPROVAL DATE

LICENSED LANDSCAPE ARCHITECT — MATTHEW J CASLAVKA — Signature — Renewal Date 10-31-13 — Date 03-19-12 — STATE OF CALIFORNIA

THE STATE OF CALIFORNIA OR ITS OFFICERS OR AGENTS SHALL NOT BE RESPONSIBLE FOR THE ACCURACY OR COMPLETENESS OF SCANNED COPIES OF THIS PLAN SHEET.

SUBTOTALS PER PLAN SHEET ON MAIN SUPPLY SIDE OF CONTROL VALVE

DESCRIPTION			UNIT	SHEET NUMBER 1	SUBTOTALS
BPA		2"	EA	1	1
BPA		ENCLOSURE		1	1
BOOSTER PUMP					
IRRIGATION CONTROLLER		42 STATION	EA	1	1
IRRIGATION CONTROLLER		STATION			
IRRIGATION CONTROLLER		STATION			
IRRIGATION CONTROLLER	CEC	SINGLE			
IRRIGATION CONTROLLER	CEC	DOUBLE			
VALVES AND ASSEMBLIES	BV	2"	EA	5	5
VALVES AND ASSEMBLIES	RCV	1"	EA	38	31
VALVES AND ASSEMBLIES	GV	2"	EA	1	1
VALVES AND ASSEMBLIES	QCV				
VALVES AND ASSEMBLIES	FS	2"	EA	1	1
VALVES AND ASSEMBLIES	CARV	1"	EA	3	3
CONDUIT	CSP				
CONDUIT	WSP				
PLASTIC PIPE SUPPLY LINE	SCH 40	1"	FT	9350	9350
PLASTIC PIPE SUPPLY LINE	SCH 40	1¼"	FT	2085	2085
PLASTIC PIPE SUPPLY LINE	SCH 40	1½"	FT	4710	4710
PLASTIC PIPE SUPPLY LINE	UVR				
PLASTIC PIPE SUPPLY LINE	PR 315	2"	FT	1900	1900
PLASTIC PIPE (IRRIGATION LINE)		½In 24 In SPACING	FT	4800	4800
SPRINKLER TYPE		B-5 Part	EA	416	416
SPRINKLER TYPE		B-5 Part	EA	145	145

TOTAL QUANTITIES

TOTALS	UNIT	DESCRIPTION	
1	EA	2"	BPA
1		ENCLOSURE	BPA
		BOOSTER PUMP	
1	EA	42 STATION	IRRIGATION CONTROLLER
		STATION	IRRIGATION CONTROLLER
		STATION	IRRIGATION CONTROLLER
		SINGLE	CEC
		DOUBLE	CEC
5	EA	2"	BV
38	EA	1"	RCV
1	EA	2"	GV
1	EA	2"	FS
3	EA	1"	CARV
9350	FT	1"	SCH 40
2085	FT	1¼"	SCH 40
4710	FT	1½"	SCH 40
1900	FT	2"	PR 315
4800	FT	½In 24 In SPACING	PLASTIC PIPE (IRRIGATION LINE)
416	EA	B-5 full	SPRINKLER TYPE
145	EA	B-5 Part	SPRINKLER TYPE

ABBREVIATIONS:

BPA — backflow preventer assembly
BV — ball valve
CV — check valve
CARV — combination air release valve
CEC — controller enclosure cabinet
CSP — corrugated steel pipe
DIP — ductile iron pipe
EA — each
FAU — filter assembly unit
FCV — flow control valve
FS — flow sensor
FV — flush valve
GSP — galvanized steel pipe
GV — gate valve
MCV — manual control valve
Ft — foot/feet
PR — pressure rated
PRV — pressure reducing valve
PRLV — pressure relief valve
QCV — quick coupling valve
RCV — remote control valve
RCVM — remote control valve (master)
UVR — ultrviolet resistent
VAU — valve assembly unit
WSP — welded steel pipe
WS — wye strainer

IRRIGATION QUANTITIES

IQ-2

STATE OF CALIFORNIA - DEPARTMENT OF TRANSPORTATION
LANDSCAPE ARCHITECTURE
Caltrans®

SENIOR LANDSCAPE ARCHITECT: ERIC DICKSON
CALCULATED-DESIGNED BY: JARED GODETT
CHECKED BY: MATTHEW CASLAVKA
REVISED BY
DATE REVISED

LAST REVISION 00-00-00
DATE PLOTTED => 17-APR-2012
TIME PLOTTED => 09:56

DIST	COUNTY	ROUTE	POST MILES TOTAL PROJECT	SHEET NO.	TOTAL SHEETS
12	Ora	55	17.0/17.7	27	39

REGISTERED CIVIL ENGINEER

November 17, 2006
PLANS APPROVAL DATE

REGISTERED PROFESSIONAL ENGINEER Michael Janzen No. 44788 Exp. 03-31-08 CIVIL STATE OF CALIFORNIA

The State of California or its officers or agents shall not be responsible for the accuracy or completeness of electronic copies of this plan sheet.

To accompany plans dated 4-16-12

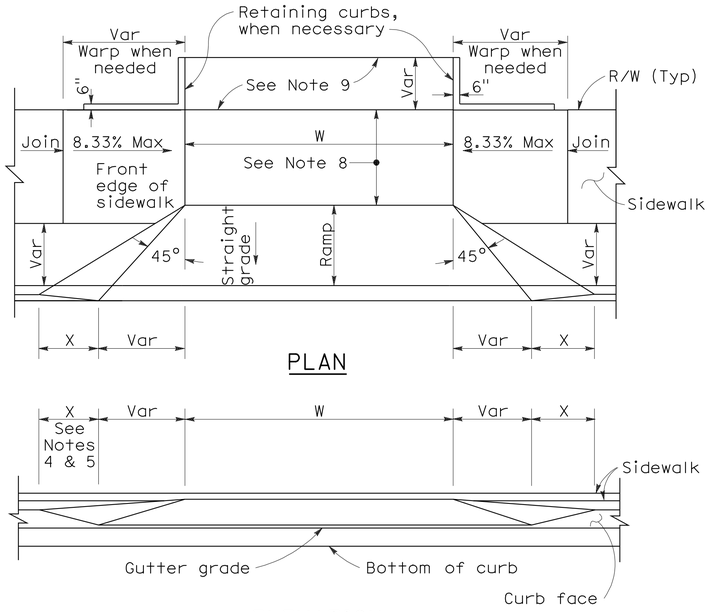

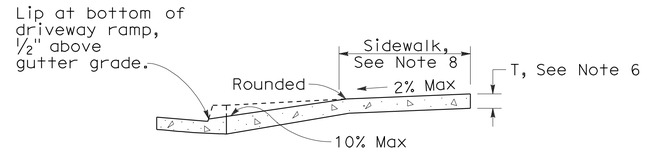

CASE A

Typical driveway, sidewalk not depressed

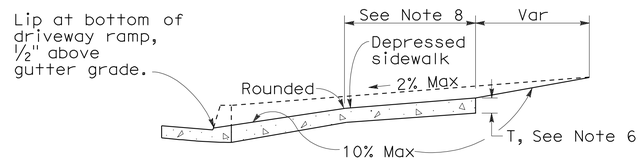

CASE B

Driveway with depressed sidewalk

SECTIONS

CURB QUANTITIES

TYPE	CUBIC YARDS PER LINEAR FOOT
A1-6	0.02585
A1-8	0.03084
A2-6	0.05903
A2-8	0.06379
A3-6	0.01036
A3-8	0.01435
B1-4	0.02185
B1-6	0.02930
B2-4	0.05515
B2-6	0.06171
B3-4	0.00641
B3-6	0.01074
B4	0.05709
D-4	0.04083
D-6	0.06804
E	0.06661

TABLE A

CURB TYPE	DIMENSIONS "H1"	"H2"	"W1"	"W2"
A1-6	1'-2"	6"	7½"	1½"
A1-8	1'-4"	8"	8"	2"
A2-6	1'-0"	6"	2'-7½"	1½"
A2-8	1'-2"	8"	2'-8"	2"
A3-6	6"	5"	7¼"	1¼"
A3-8	8"	7"	7¾"	1¾"
B1-4	1'-0"	4"	7½"	2½"
B1-6	1'-2"	6"	9"	4"
B2-4	10"	4"	2'-7½"	2½"
B2-6	1'-0"	6"	2'-9"	4"
B3-4	4"	3"	7"	2"
B3-6	6"	5"	8½"	3½"
D-4	10"	4"	1'-6"	1'-1"
D-6	1'-0"	6"	2'-2"	1'-8"

DRIVEWAYS

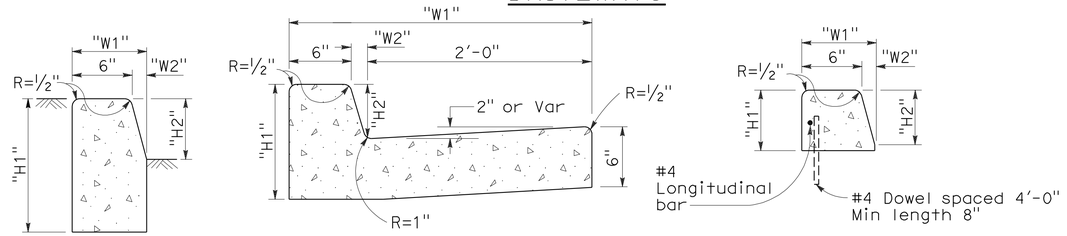

TYPE A1 CURBS
See Table A

TYPE A2 CURBS
See Table A

TYPE A3 CURBS
Superimposed on existing pavement
See Table A

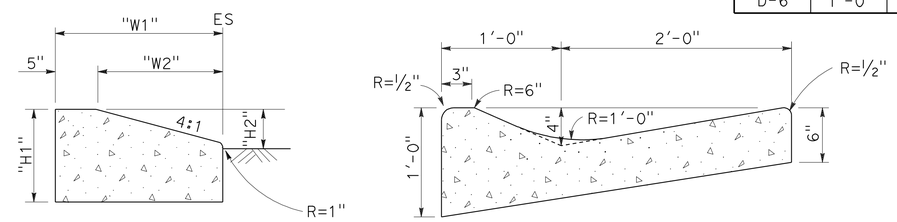

TYPE D CURBS
See Table A

TYPE E CURB

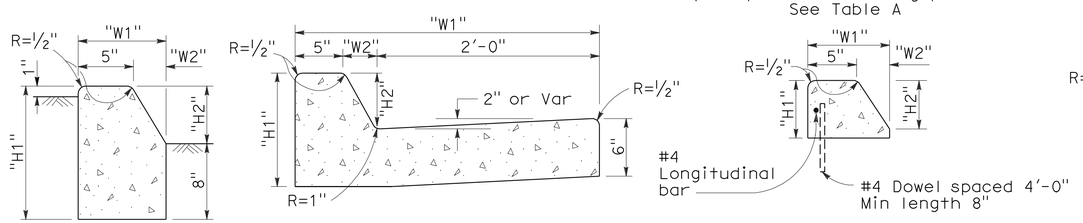

TYPE B1 CURBS
See Table A

TYPE B2 CURBS
See Table A

TYPE B3 CURBS
Superimposed on existing pavement
See Table A

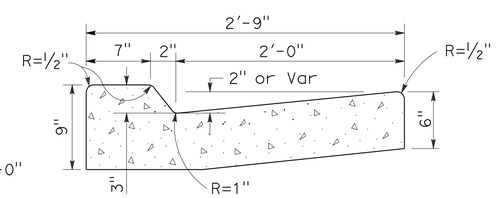

TYPE B4 CURBS

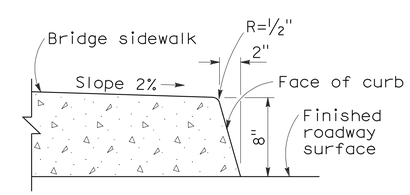

TYPE H CURB
On Bridges

CURBS

NOTES:

1. Case A driveway section typically applies.
2. Use Case B driveway section when ramp slopes would exceed 10% in Case A.
3. Use Case B driveway section when sidewalk cross slope would exceed 2% in Case A.
4. X=3'-0" except for curb heights over 10" where 4:1 slopes shall be used on curb slope.
5. X is a variable when sidewalk is located where wheelchairs may traverse the surface. Slopes shall not exceed 8.33%.
6. Sidewalk and ramp thickness "T" at driveway shall be 4" for residental and 6" for commercial.
7. Difference in slope of the driveway ramp and the slope of a line between the gutter and a point on the roadway 5'-0" from gutter line shall not exceed 15%. Reduce driveway ramp slope, not gutter slope, where required.
8. Minimum width of clear passageway for sidewalk shall be 4'-0".
9. Retaining curbs and acquisition of construction easement may be necessary for narrow sidewalks or curb heights in excess of 6".
10. Across the pedestrian route at curb ramp locations, the gutter pan slope shall not exceed 1" of depth for each 2'-0" of width.

STATE OF CALIFORNIA
DEPARTMENT OF TRANSPORTATION

CURBS AND DRIVEWAYS

NO SCALE

RSP A87A DATED NOVEMBER 17, 2006 SUPERSEDES STANDARD PLAN A87A DATED MAY 1, 2006 - PAGE 113 OF THE STANDARD PLANS BOOK DATED MAY 2006.

REVISED STANDARD PLAN RSP A87A

2006 REVISED STANDARD PLAN RSP A87A

10-25-06

DIST	COUNTY	ROUTE	POST MILES TOTAL PROJECT	SHEET NO.	TOTAL SHEETS
12	Ora	55	17.0/17.7	28	39

REGISTERED CIVIL ENGINEER

September 1, 2006
PLANS APPROVAL DATE

REGISTERED PROFESSIONAL ENGINEER — Hector David Cordova — No. C41957 — Exp. 3-31-08 — CIVIL — STATE OF CALIFORNIA

The State of California or its officers or agents shall not be responsible for the accuracy or completeness of electronic copies of this plan sheet.

To accompany plans dated 4-16-12

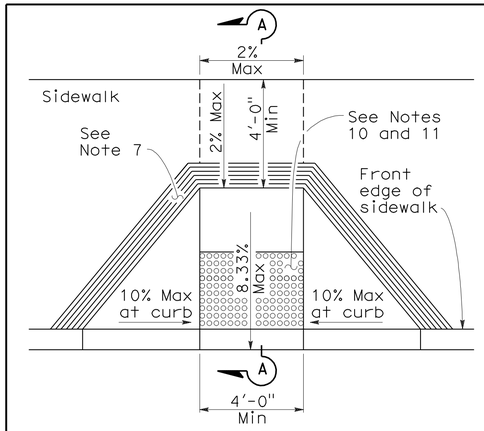

CASE A

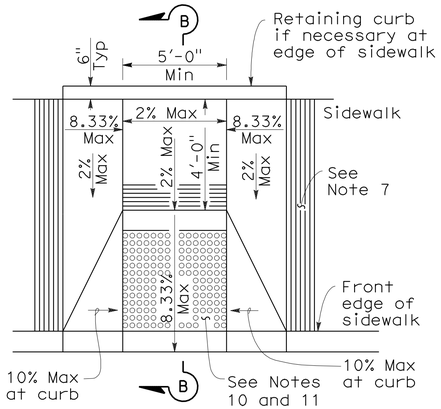

CASE B

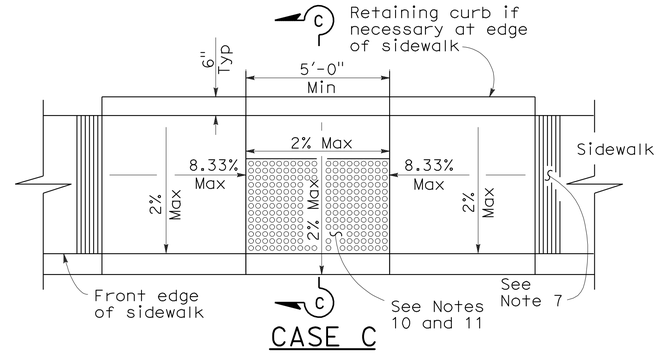

CASE C

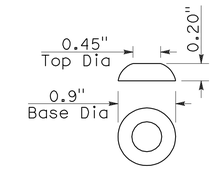

RAISED TRUNCATED DOME

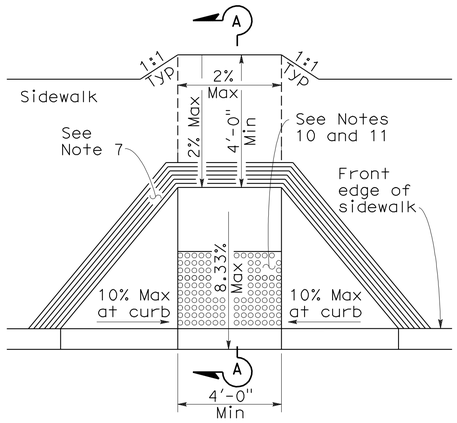

CASE D

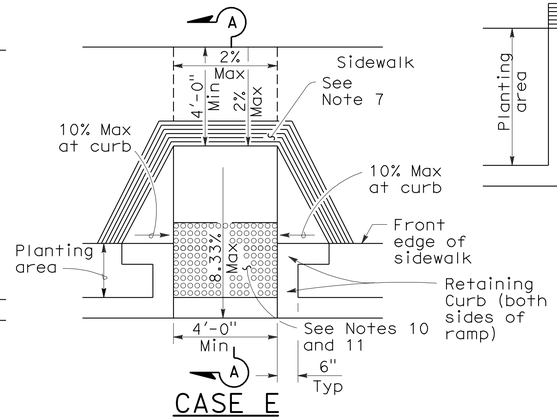

CASE E

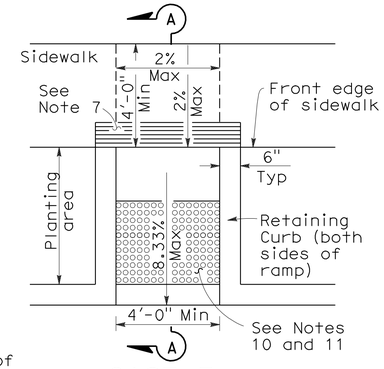

CASE F

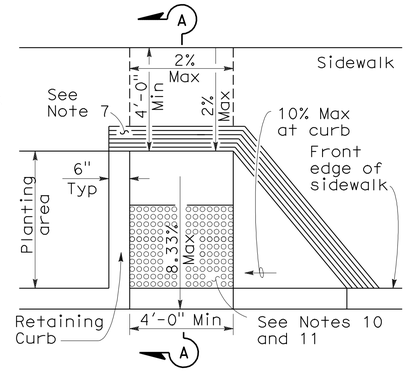

CASE G

See Note 4

SECTION A-A

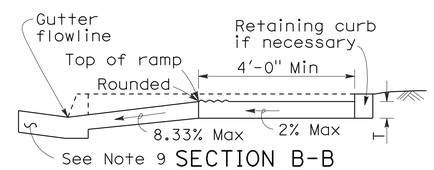

SECTION B-B

Depress entire sidewalk as required

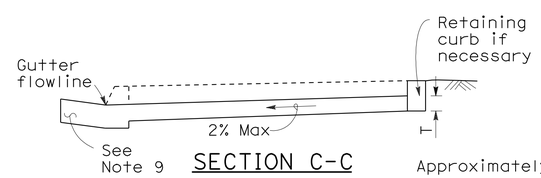

SECTION C-C

NOTES:

1. As site conditions dictate, Case A through Case G curb ramps may be used for corner installations similar to those shown in Detail A and Detail B. The case of curb ramps used in Detail A do not have to be the same. Case A through Case G curb ramps also may be used at mid block locations, as site conditions dictate.
2. If distance from curb to back of sidewalk is too short to accommodate ramp and 4'-0" platform (landing) as shown in Case A, the sidewalk may be depressed longitudinally as in Case B, or C or may be widened as in Case D.
3. When ramp is located in center of curb return, crosswalk configuration must be similar to that shown for Detail B.
4. As site conditions dictate, the retaining curb side and the flared side of the Case G ramp shall be constructed in reversed position.
5. If located on a curve, the sides of the ramp need not be parallel, but the minimum width of the ramp shall be 4'-0".
6. Side slope of ramp flares vary uniformly from a maximum of 10% at curb to conform with longitudinal sidewalk slope adjacent to top of the ramp, except in Case C and Case F.
7. The curb ramp shall be outlined, as shown, with a 1'-0" wide border with 1/4" grooves approximately 3/4" on center. See grooving detail.
8. Transitions from ramps and landing to walks, gutters or streets shall be flush and free of abrupt changes.
9. Maximum slopes of adjoining gutters, the road surface immediately adjacent to the curb ramp or accessible route shall not exceed 5 percent within 4'-0" of the top and bottom of the curb ramp.
10. Curb ramps shall have a detectable warning surface that extends the full width and 3'-0" depth of the ramp. Detectable Warning Surfaces shall conform to the details on this plan and the requirements in the Special Provisions.
11. The edge of the detectable warning surface nearest the street shall be between 6" and 8" from the gutter flowline.
12. Sidewalk and ramp thickness, "T", shall be 3 1/2" minimum.
13. Utility pull boxes, manholes, vaults and all other utility facilities within the boundaries of the curb ramp will be relocated or adjusted to grade by the owner prior to, or in conjunction with, curb ramp construction.
14. For retrofit conditions, removal and replacement of curb apron will be at the Contractor's option, unless otherwise shown on project plans.

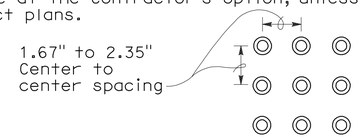

RAISED TRUNCATED DOME PATTERN (IN-LINE)

DETECTABLE WARNING SURFACE

See Note 10

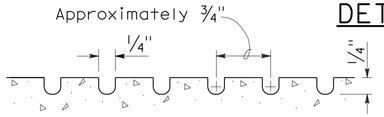

GROOVING DETAIL

DETAIL A

TYPICAL TWO-RAMP CORNER INSTALLATION

See Note 1

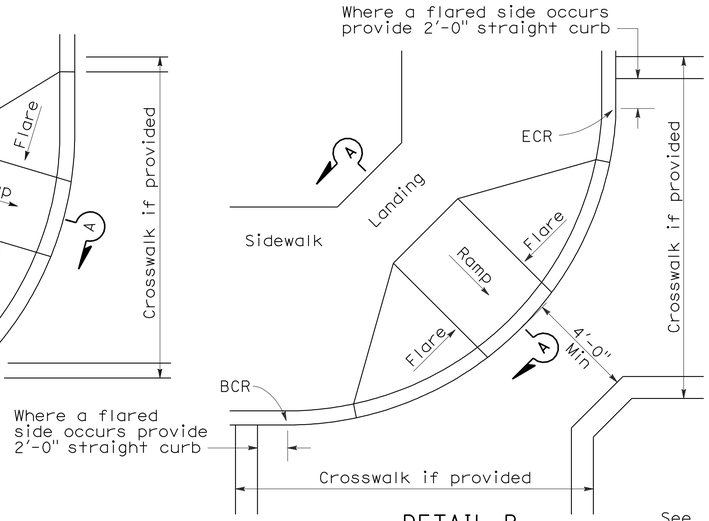

DETAIL B

TYPICAL ONE-RAMP CORNER INSTALLATION

See Notes 1 and 3

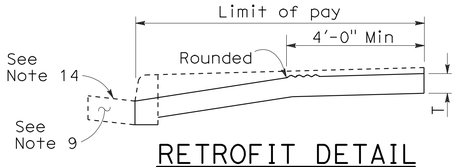

RETROFIT DETAIL

Existing curb and sidewalk

STATE OF CALIFORNIA
DEPARTMENT OF TRANSPORTATION

CURB RAMP DETAILS

NO SCALE

RSP A88A DATED SEPTEMBER 1, 2006 SUPERSEDES STANDARD PLAN A88A DATED MAY 1, 2006 - PAGE 115 OF THE STANDARD PLANS BOOK DATED MAY 2006.

REVISED STANDARD PLAN RSP A88A

2006 REVISED STANDARD PLAN RSP A88A

8-3-06

DIST	COUNTY	ROUTE	POST MILES TOTAL PROJECT	SHEET NO.	TOTAL SHEETS
12	Ora	55	17.0/17.7	29	39

LICENSED LANDSCAPE ARCHITECT

June 5, 2009
PLANS APPROVAL DATE

LICENSED LANDSCAPE ARCHITECT
Gregory A. Balzer 2016
9-10 (Renewal) Date
2-28-11 (Renewal) Date
5-14-09 Date
STATE OF CALIFORNIA

The State of California or its officers or agents shall not be responsible for the accuracy or completeness of electronic copies of this plan sheet.

To accompany plans dated 4-16-12

2006 REVISED STANDARD PLAN RSP H1

A

AB	aggregate base
ABS	acrylonitrile-butadiene-styrene
AC	asphalt concrete
Adj	adjacent/adjustable
AIC	auxiliary irrigation controller
Alt	alternative
AMEND	amendment
ARV	air release valve
AUTO	automatic
AUX	auxiliary
AVB	atmospheric vacuum breaker

B

B&B	balled and burlapped
B/B	brass/bronze
B/B/PL	brass/bronze/plastic
B/PL	brass/plastic
BFM	bonded fiber matrix
Bit Ctd	bituminous coated
BP	booster pump
BPA	backflow preventer assembly
BPAE	backflow preventer assembly in enclosure
BPE	backflow preventer enclosure
BV	ball valve

C

CAP	corrugated aluminum pipe
CARV	combination air release valve
CCA	cam coupler assembly
CEC	controller enclosure cabinet
CHDPE	corrugated high density polyethylene
CL	chain link
CNC	control and neutral conductors
Conc	concrete
Cond	conduit
CSP	corrugated steel pipe
CST	center strip
CV	check valve

D

Dia	diameter
DIP	ductile iron pipe
DN	diameter nominal

E

EA	each
Elect	electric/electrical
Elev	elevation
ENCL	enclosure
EP	edge of pavement
ES	edge of shoulder
EST	end strip
ESTB	establishment
ETW	edge of traveled way

F

F	full circle
F/P	full/part circle
FAU	filter assembly unit
FCV	flow control valve
FERT	fertilizer
FG	finished grade
FIPT	female iron pipe thread
FIS	fertilizer injector system
FL	flow line
FM	flow monitor
FS	flow sensor
Ft	foot/feet
FV	flush valve

G

GAL	Gallon(s)
Galv	galvanized
GARV	garden valve
GPH	gallons per hour
GPM	gallons per minute
GSP	galvanized steel pipe
GV	gate valve

H

H	half circle
HB	hose bib
HDPE	high density polyethylene
HP	horsepower/hinge point
HPL	high pressure line
Hwy	highway

I

IC	irrigation controller
ICC	irrigation controller(s) in controller enclosure cabinet
ID	inside diameter
In	inches
IFS	irrigation filtration system
IPS	iron pipe size
IPT	iron pipe thread
Irr	irrigation

L

L	length
LF	linear foot

M

Max	maximum
MBGR	metal beam guard railing
MCV	manual control valve
MIC	master irrigation controller
Min	minimum
MIPT	male iron pipe thread
Misc	miscellaneous
Mtl	material
MVP	maintenance vehicle pullout

N

NCN	no common name
NL	nozzle line
No.	number
NPT	national pipe thread

O

O/C	on center
OD	outside diameter
Oz	ounce

P

P	part circle
PB	pull box
PCC	portland cement concrete
PE	polyethylene
Pkt	packet
PL	plastic
PLT	plant/planting
PLT ESTB	plant establishment
PM	post mile
PR	pressure rated
PRLV	pressure relief valve
PSFM	polymer stabilized fiber matrix
PSI	pounds per square inch
PRV	pressure reducing valve
PVC	polyvinyl chloride
Pvmt	pavement

Q

Q	quarter circle
QCV	quick coupling valve

R

R	radius
RCP	reinforced concrete pipe
RCV	remote control valve
RCVM	remote control valve (master)
RCVMF	remote control valve (master) w/ flow meter
RCW	recycled/reclaimed water
RECP	rolled erosion control product
REQ	required
R/W	right of way

S

S	slip
SCC	sprinkler control conduit
SCH	schedule
SF	state-furnished
Shld	shoulder
SQFT	square foot/feet
SQYD	square yard(s)
SST	side strip
Sta	station
Std	standard
SW	sidewalk/sound wall

T

T	third circle/thread
TLS	truck loading standpipe
TQ	three quarter circle
TRM	turf reinforcement mat
TRVD	traveled
TT	two third circle
Typ	typical

U

UG	underground

V

VAU	valve assembly unit

W

W	width
W/	with
WM	water meter
WS	wye strainer
WSP	welded steel pipe
WWM	welded wire mesh

NOTE:

FOR ADDITIONAL ABBREVIATIONS, SEE STANDARD PLANS A10A AND A10B.

STATE OF CALIFORNIA
DEPARTMENT OF TRANSPORTATION

PLANTING AND IRRIGATION ABBREVIATIONS

NO SCALE

RSP H1 DATED JUNE 5, 2009 SUPERSEDES STANDARD PLAN H1 DATED MAY 1, 2006 - PAGE 201 OF THE STANDARD PLANS BOOK DATED MAY 2006.

REVISED STANDARD PLAN RSP H1

DIST	COUNTY	ROUTE	POST MILES TOTAL PROJECT	SHEET NO.	TOTAL SHEETS
12	Ora	55	17.0/17.7	30	39

LICENSED LANDSCAPE ARCHITECT

June 5, 2009
PLANS APPROVAL DATE

The State of California or its officers or agents shall not be responsible for the accuracy or completeness of electronic copies of this plan sheet.

LICENSED LANDSCAPE ARCHITECT — Gregory A. Balzer — 2016 — 9-10 Renewal — 2-28-11 Renewal Date — 5-14-09 Date — STATE OF CALIFORNIA

To accompany plans dated 4-16-12

EXISTING	PROPOSED	ITEM DESCRIPTION
		WATER METER (WM)
		BACKFLOW PREVENTER ASSEMBLY (BPA)
		BACKFLOW PREVENTER ASSEMBLY IN ENCLOSURE (BPAE)
		BACKFLOW PREVENTER ENCLOSURE (BPE)
		BOOSTER PUMP (BP)
		TRUCK LOADING STANDPIPE (TLS)
FS	FS	FLOW SENSOR (FS)
X	X	MASTER IRRIGATION CONTROLLER (MIC)
		AUXILIARY IRRIGATION CONTROLLER (AIC)
		IRRIGATION CONTROLLER (IC)/ IRRIGATION CONTROLLER (IC) (BATTERY) IRRIGATION CONTROLLER (IC) (SOLAR)
		IRRIGATION CONTROLLER(S) IN CONTROLLER ENCLOSURE CABINET (ICC)
		CONTROL AND NEUTRAL CONDUCTORS (CNC)
SCC	SCC	SPRINKLER CONTROL CONDUIT (SCC)
		IRRIGATION CROSSOVER
		EXTEND IRRIGATION CROSSOVER
		IRRIGATION SLEEVE
dip	DIP	DUCTILE IRON PIPE (SUPPLY LINE) (MAIN) (DIP)
		GALVANIZED STEEL PIPE (SUPPLY LINE) (MAIN) (GSP)
		GALVANIZED STEEL PIPE (SUPPLY LINE) (LATERAL) (GSP)
		PLASTIC PIPE (PR 200) (SUPPLY LINE) (MAIN)
		PLASTIC PIPE (PR 200) (SUPPLY LINE) (LATERAL)
		PLASTIC PIPE (IRRIGATION LINE)
		REMOTE CONTROL VALVE (RCV) REMOTE CONTROL VALVE (MASTER) (RCVM) REMOTE CONTROL VALVE (MASTER) W/FLOW METER (RCVMF)
		MANUAL CONTROL VALVE (MCV)
		VALVE ASSEMBLY UNIT (VAU)
		WYE STRAINER (WS)
		FILTER ASSEMBLY UNIT (FAU)
		GATE VALVE (GV)
		BALL VALVE (BV)

EXISTING	PROPOSED	ITEM DESCRIPTION
		QUICK COUPLING VALVE (QCV)
		CAM COUPLER ASSEMBLY (CCA)
		PRESSURE REDUCING VALVE (PRV)
		PRESSURE RELIEF VALVE (PRLV)
		FLOW CONTROL VALVE (FCV)
		COMBINATION AIR RELEASE VALVE (CARV)
		CHECK VALVE (CV)
		FLUSH VALVE (FV)
		NOZZLE LINE W/TURNING UNION
		IRRIGATION SYSTEM
		IRRIGATION SYSTEM TO BE REMOVED
		CHAIN LINK GATE
		QUICK COUPLING VALVE W/SPRINKLER PROTECTOR
3	3	SPRINKLER W/SPRINKLER PROTECTOR
	C	CONNECT TO EXISTING SYSTEM
		CAP
		CAP EXISTING

VALVE CODE

RCV SIZE
IRRIGATION CONTROLLER
CONTROLLER STATION
VALVE IN PARALLEL (IF APPLICABLE)
GPM
QUANTITY OF SPRINKLERS (WHEN SHOWN)

* 2½"-A-2b-40 -60

MCV SIZE
VALVE NUMBER
GPM
QUANTITY OF TYPE SPRINKLERS (WHEN SHOWN)

* 2"-3-30 -50

* VALVE CODES FOR EXISTING VALVES ARE SHOWN IN A DASHED ENCLOSURE.

STATE OF CALIFORNIA
DEPARTMENT OF TRANSPORTATION

PLANTING AND IRRIGATION SYMBOLS

NO SCALE

RSP H2 DATED JUNE 5, 2009 SUPERSEDES RSP H2 DATED MARCH 7, 2008 AND STANDARD PLAN H2 DATED MAY 1, 2006 - PAGE 202 OF THE STANDARD PLANS BOOK DATED MAY 2006.

REVISED STANDARD PLAN RSP H2

2006 REVISED STANDARD PLAN RSP H2

5-11-09

DIST	COUNTY	ROUTE	POST MILES TOTAL PROJECT	SHEET NO.	TOTAL SHEETS
12	Ora	55	17.0/17.7	31	39

LICENSED LANDSCAPE ARCHITECT

June 5, 2009
PLANS APPROVAL DATE

The State of California or its officers or agents shall not be responsible for the accuracy or completeness of electronic copies of this plan sheet.

LICENSED LANDSCAPE ARCHITECT
Gregory A. Balzer 2016
9-10 Expiration
2-28-11 Renewal Date
5-14-09 Date
STATE OF CALIFORNIA

To accompany plans dated 4-16-12

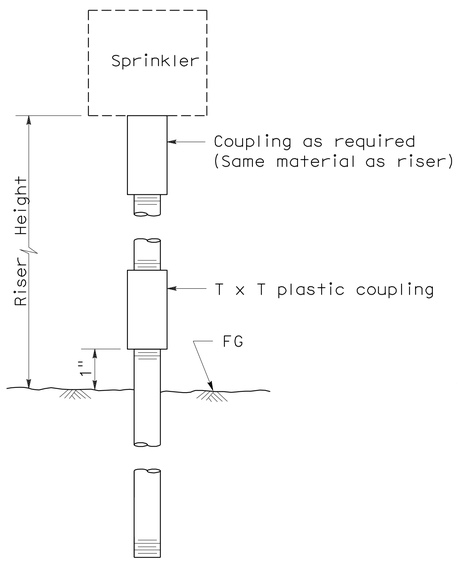

ELEVATION
RISER TYPE I

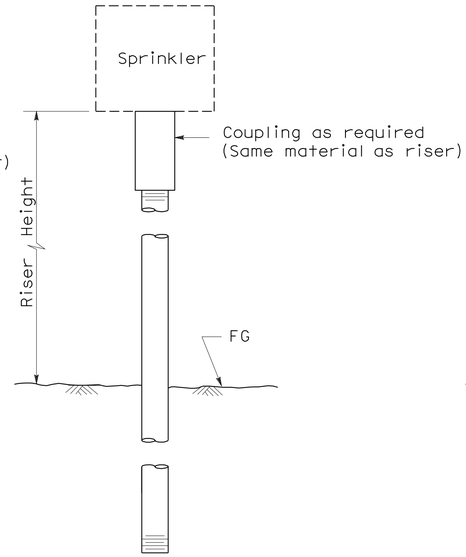

ELEVATION
RISER TYPE II

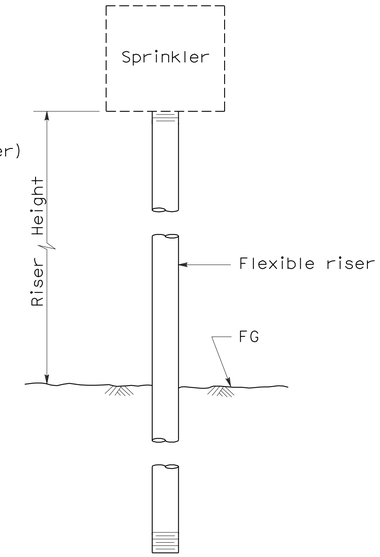

ELEVATION
RISER TYPE III

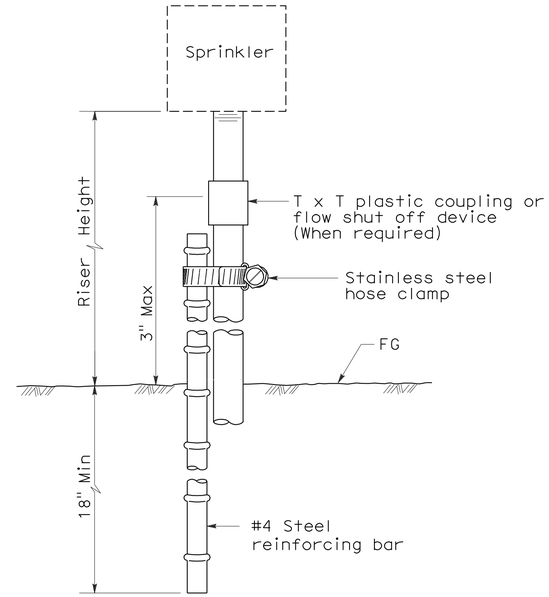

ELEVATION
RISER TYPE IV

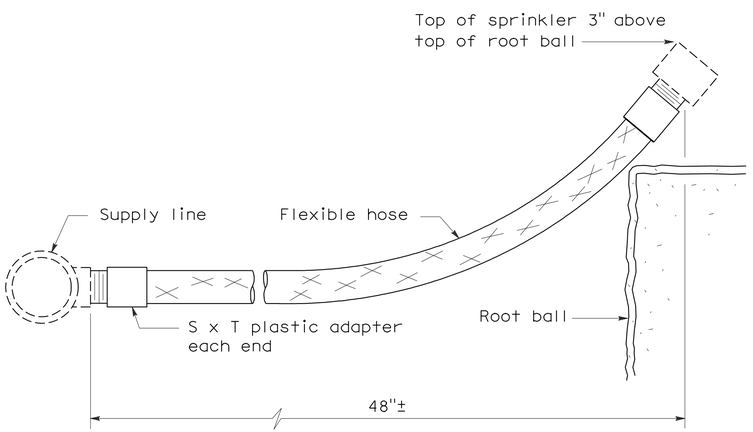

ELEVATION
RISER TYPE V

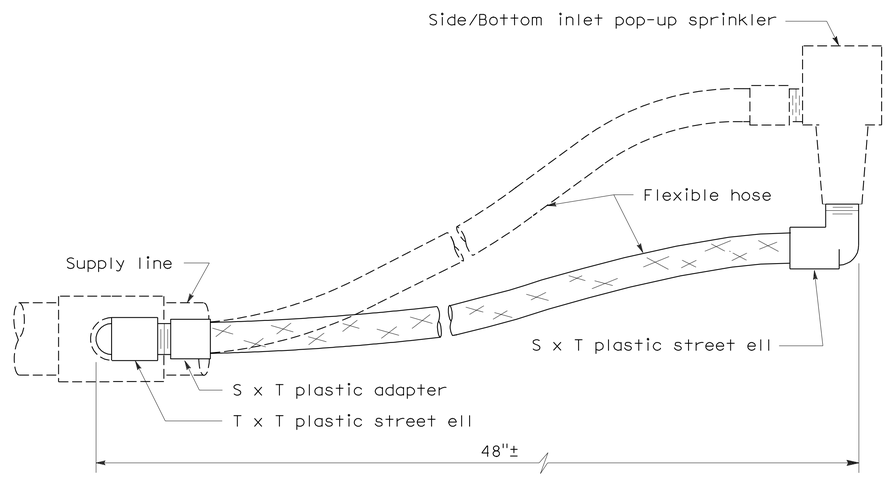

ELEVATION
RISER TYPE VI

STATE OF CALIFORNIA
DEPARTMENT OF TRANSPORTATION

PLANTING AND IRRIGATION DETAILS

NO SCALE

RSP H5 DATED JUNE 5, 2009 SUPERSEDES STANDARD PLAN H5
DATED MAY 1, 2006 - PAGE 205 OF THE STANDARD PLANS BOOK DATED MAY 2006.

REVISED STANDARD PLAN RSP H5

2006 REVISED STANDARD PLAN RSP H5

5-28-09

DIST	COUNTY	ROUTE	POST MILES TOTAL PROJECT	SHEET NO.	TOTAL SHEETS
12	Ora	55	17.0/17.7	32	39

Gregory A. Balzer
LICENSED LANDSCAPE ARCHITECT

June 5, 2009
PLANS APPROVAL DATE

The State of California or its officers or agents shall not be responsible for the accuracy or completeness of electronic copies of this plan sheet.

LICENSED LANDSCAPE ARCHITECT Gregory A. Balzer 2576 STATE OF CALIFORNIA
9-10 (Renewal) Date
2-28-11 (Renewal) Date
5-14-09 Date

To accompany plans dated 4-16-12

2006 REVISED STANDARD PLAN RSP H7

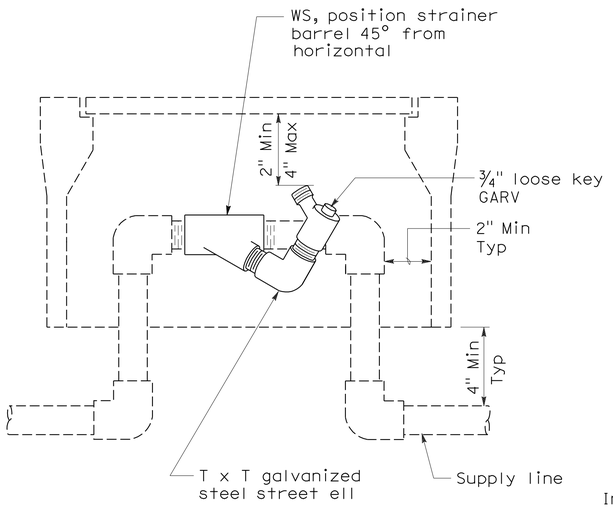

ELEVATION
WYE STRAINER

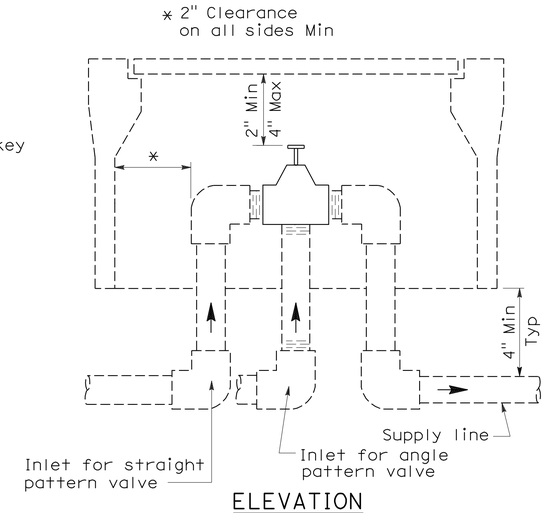

ELEVATION
VALVE

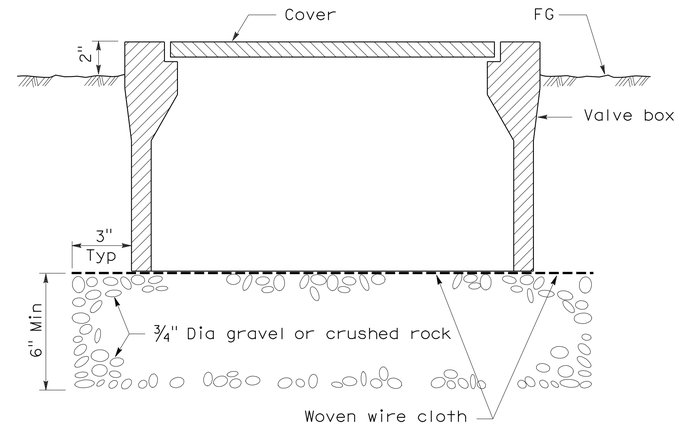

SECTION
VALVE BOX

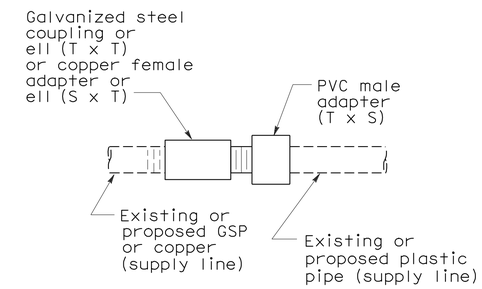

PLAN
GALVANIZED OR COPPER PIPE CONNECTION TO PLASTIC PIPE

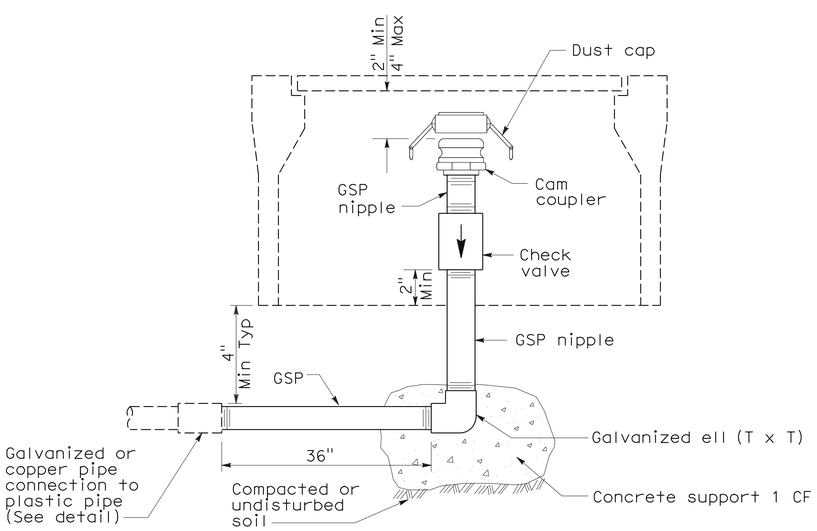

ELEVATION
CAM COUPLER ASSEMBLY

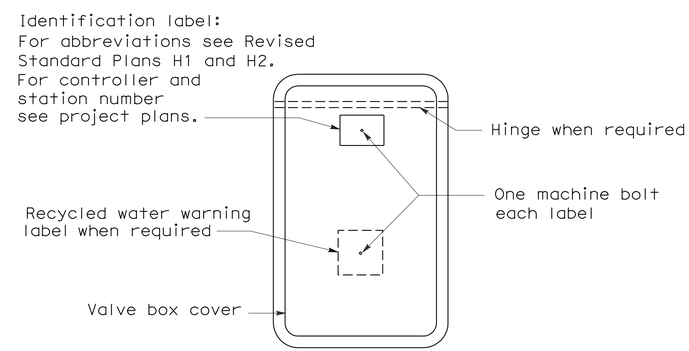

PLAN

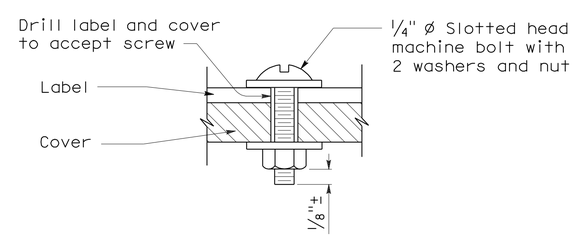

SECTION
VALVE BOX IDENTIFICATION

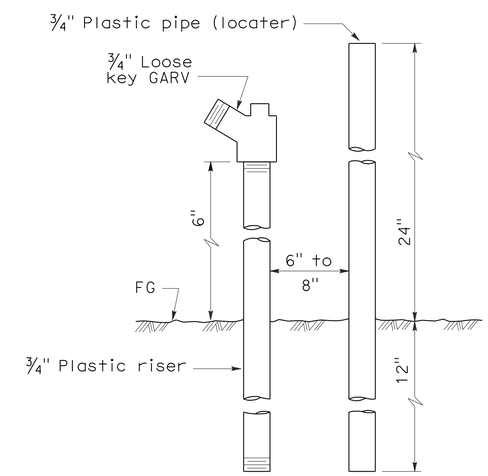

ELEVATION
FLUSH VALVE

STATE OF CALIFORNIA
DEPARTMENT OF TRANSPORTATION

PLANTING AND IRRIGATION DETAILS

NO SCALE

RSP H7 DATED JUNE 5, 2009 SUPERSEDES STANDARD PLAN H7
DATED MAY 1, 2006 - PAGE 207 OF THE STANDARD PLANS BOOK DATED MAY 2006.

REVISED STANDARD PLAN RSP H7

5-28-09

DIST	COUNTY	ROUTE	POST MILES TOTAL PROJECT	SHEET NO.	TOTAL SHEETS
12	Ora	55	17.0/17.7	33	39

Gregory A. Balzer
LICENSED LANDSCAPE ARCHITECT

June 5, 2009
PLANS APPROVAL DATE

LICENSED LANDSCAPE ARCHITECT
Gregory A. Balzer 2016
Gregory A. Balzer
10-31-11
Expiration Date
2-28-11
Renewal Date
5-14-09
Date
STATE OF CALIFORNIA

The State of California or its officers or agents shall not be responsible for the accuracy or completeness of electronic copies of this plan sheet.

To accompany plans dated 4-16-12

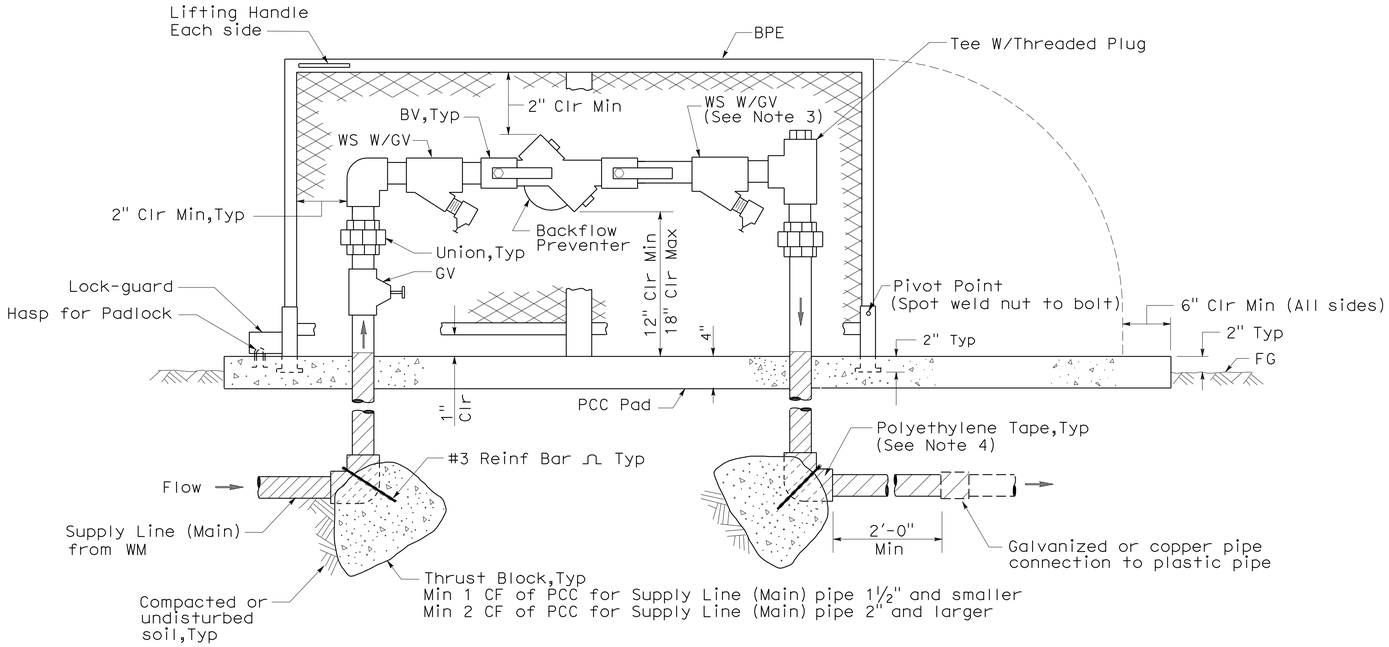

ELEVATION

BACKFLOW PREVENTER ASSEMBLY IN ENCLOSURE (ONE PIECE)

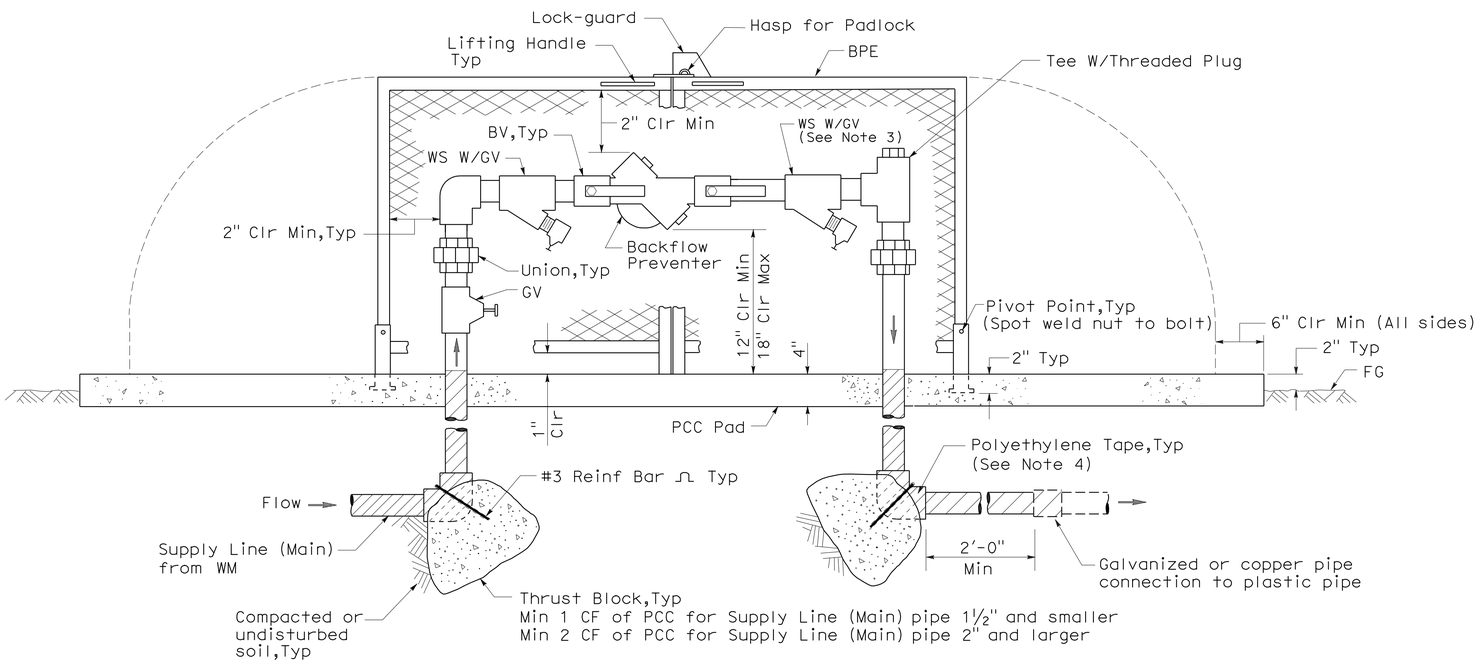

ELEVATION

BACKFLOW PREVENTER ASSEMBLY IN ENCLOSURE (TWO PIECE)

NOTES:

1. Wye strainer and fittings must be the same size as the backflow preventer shown on the plans.
2. Backflow preventer assembly manifold pipe must be the same pipe as the supply line (main) pipe to be installed from the water meter to the backflow preventer assembly.
3. Wye strainer location shown downstream of the backflow preventer is for District 11 projects only.
4. All metal in contact with soil and Portland Cement Concrete must be polyethylene wrapped using 2" wide plastic backed adhesive tape 20 mil thick with ½" overlap.

STATE OF CALIFORNIA
DEPARTMENT OF TRANSPORTATION

PLANTING AND IRRIGATION DETAILS

NO SCALE

RSP H8 DATED JUNE 5, 2009 SUPERSEDES STANDARD PLAN H8
DATED MAY 1, 2006 - PAGE 208 OF THE STANDARD PLANS BOOK DATED MAY 2006.

REVISED STANDARD PLAN RSP H8

2006 REVISED STANDARD PLAN RSP H8

5-28-09

DIST	COUNTY	ROUTE	POST MILES TOTAL PROJECT	SHEET NO.	TOTAL SHEETS
12	Ora	55	17.0/17.7	34	39

Randell D. Hiatt
REGISTERED CIVIL ENGINEER

June 6, 2008
PLANS APPROVAL DATE

REGISTERED PROFESSIONAL ENGINEER
Randell D. Hiatt
No. C50200
Exp. 6-30-09
CIVIL
STATE OF CALIFORNIA

The State of California or its officers or agents shall not be responsible for the accuracy or completeness of electronic copies of this plan sheet.

To accompany plans dated 4-16-12

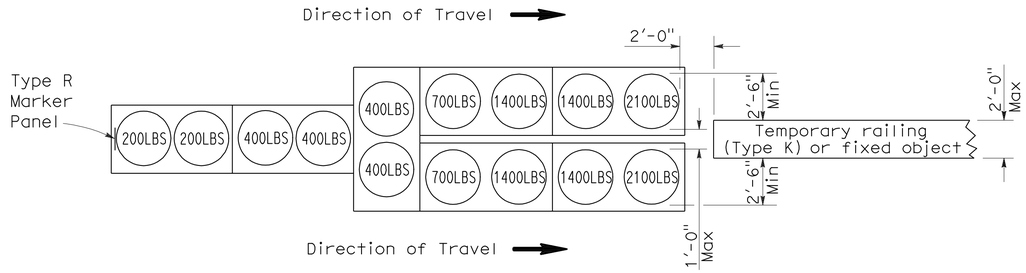

ARRAY 'TU14'

Approach speed 45 mph or more

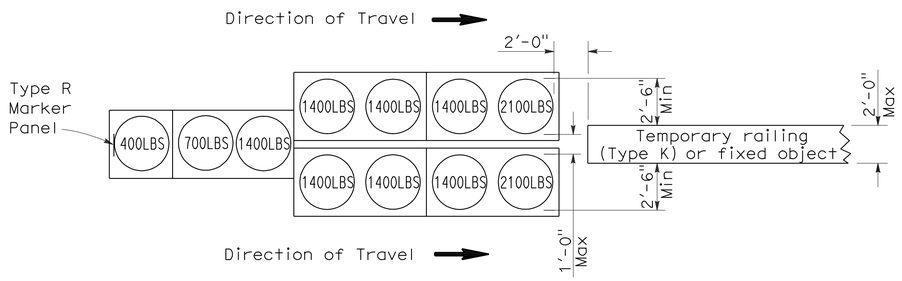

ARRAY 'TU11'

Approach speed less than 45 mph

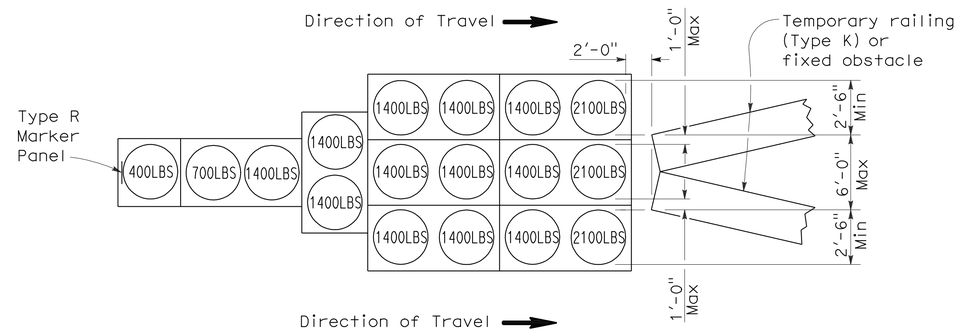

ARRAY 'TU17'

Approach speed less than 45 mph

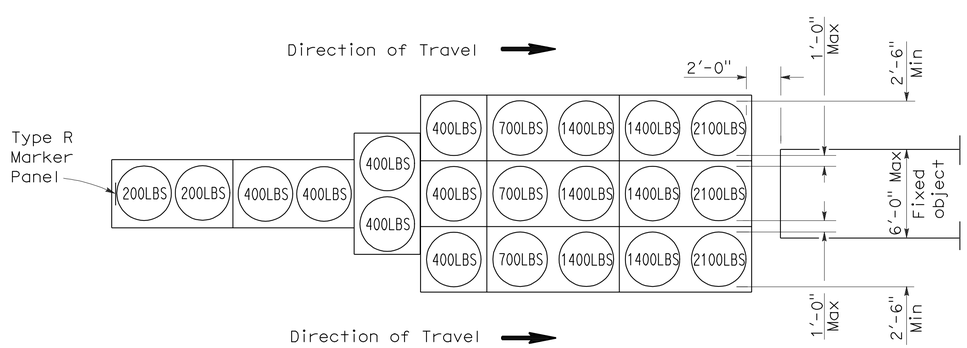

ARRAY 'TU21'

Approach speed 45 mph or more

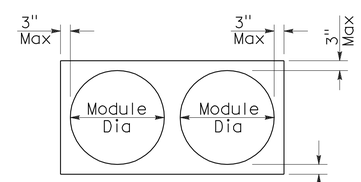

PLAN

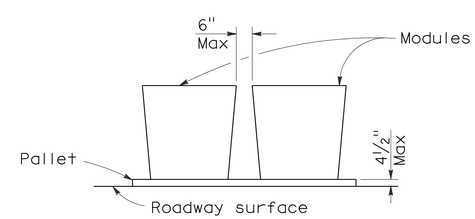

ELEVATION

CRASH CUSHION PALLET DETAIL

See Note 7

NOTES:

1. (XXX) Indicates sand filled module location and weight of sand in pounds for each module. Module spacing is based on the greater diameter of the module.
2. All sand weights are nominal.
3. Temporary crash cushion arrays shall not encroach on the traveled way.
4. Place the top of Type R marker panel 1" below the module lid.
5. Refer to Standard Plan A73B for marker details.
6. Approach speeds indicated conform to NCHRP 350 Report criteria.
7. Use of pallets is optional.

STATE OF CALIFORNIA
DEPARTMENT OF TRANSPORTATION

TEMPORARY CRASH CUSHION, SAND FILLED (UNIDIRECTIONAL)

NO SCALE

RSP T1A DATED JUNE 6, 2008 SUPERSEDES STANDARD PLAN T1A
DATED MAY 1, 2006 - PAGE 211 OF THE STANDARD PLANS BOOK DATED MAY 2006.

REVISED STANDARD PLAN RSP T1A

2006 REVISED STANDARD PLAN RSP T1A

5-15-08

DIST	COUNTY	ROUTE	POST MILES TOTAL PROJECT	SHEET NO.	TOTAL SHEETS
12	Ora	55	17.0/17.7	35	39

Randell D. Hiatt
REGISTERED CIVIL ENGINEER

June 6, 2008
PLANS APPROVAL DATE

REGISTERED PROFESSIONAL ENGINEER
Randell D. Hiatt
No. C50200
Exp. 6-30-09
CIVIL
STATE OF CALIFORNIA

The State of California or its officers or agents shall not be responsible for the accuracy or completeness of electronic copies of this plan sheet.

To accompany plans dated 4-16-12

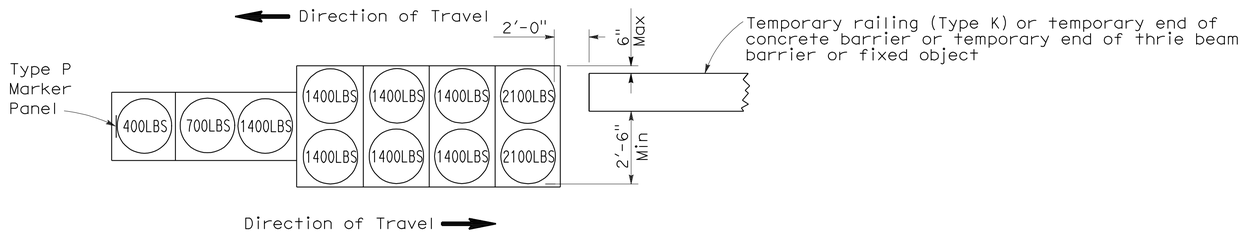

ARRAY 'TB11'

Approach speed less than 45 mph

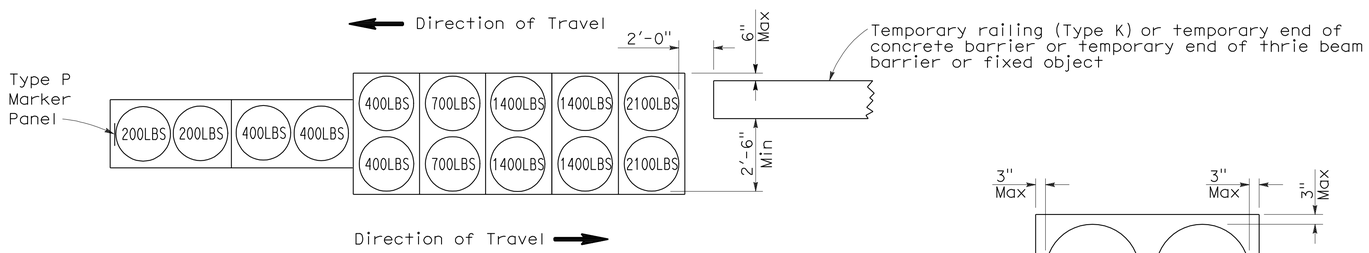

ARRAY 'TB14'

Approach speed 45 mph or more

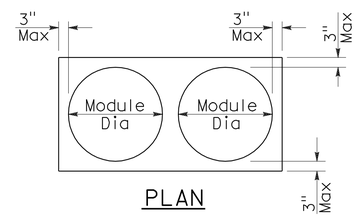

PLAN

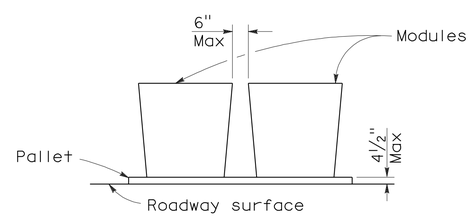

ELEVATION

CRASH CUSHION PALLET DETAIL

See Note 7

NOTES:

1. (XXX) Indicates sand filled module location and weight of sand in pounds for each module. Module spacing is based on the greater diameter of the module.
2. All sand weights are nominal.
3. Temporary crash cushion arrays shall not encroach on the traveled way.
4. Place the Type P marker panel so that the bottom of the panel rests upon the pallet.
5. Refer to Standard Plan A73B for marker details.
6. Approach speeds indicated conform to NCHRP 350 Report criteria.
7. Use of pallets is optional.

STATE OF CALIFORNIA
DEPARTMENT OF TRANSPORTATION

TEMPORARY CRASH CUSHION, SAND FILLED (BIDIRECTIONAL)

NO SCALE

RSP T1B DATED JUNE 6, 2008 SUPERSEDES STANDARD PLAN T1B
DATED MAY 1, 2006 - PAGE 212 OF THE STANDARD PLANS BOOK DATED MAY 2006.

REVISED STANDARD PLAN RSP T1B

2006 REVISED STANDARD PLAN RSP T1B

DIST	COUNTY	ROUTE	POST MILES TOTAL PROJECT	SHEET NO.	TOTAL SHEETS
12	Ora	55	17.0/17.7	36	39

Randell D. Hiatt
REGISTERED CIVIL ENGINEER

June 6, 2008
PLANS APPROVAL DATE

REGISTERED PROFESSIONAL ENGINEER
Randell D. Hiatt
No. C50200
Exp. 6-30-09
CIVIL
STATE OF CALIFORNIA

The State of California or its officers or agents shall not be responsible for the accuracy or completeness of electronic copies of this plan sheet.

To accompany plans dated 4-16-12

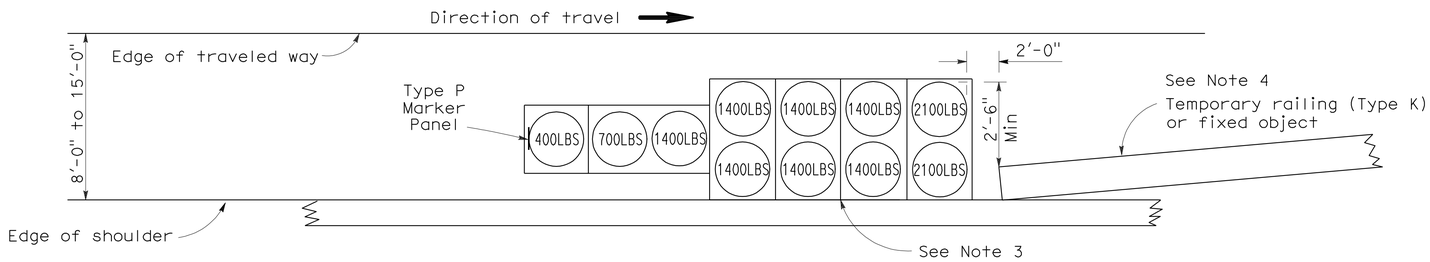

ARRAY 'TS11'

Approach speed less than 45 mph
See Note 9

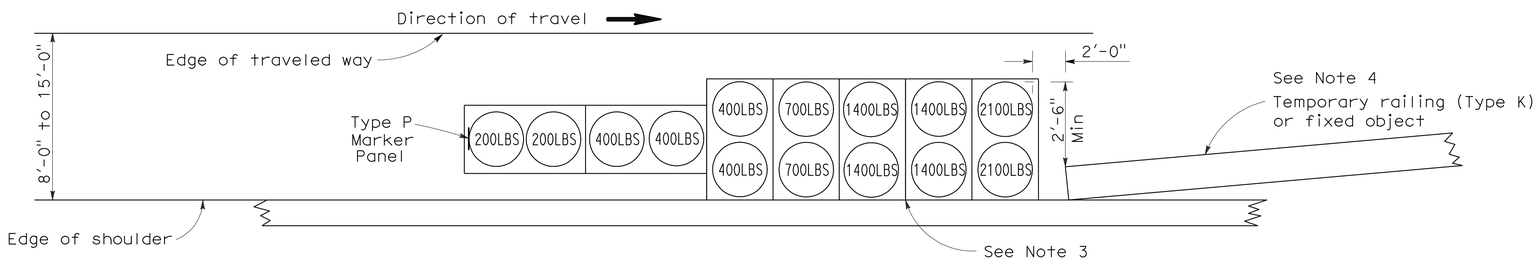

ARRAY 'TS14'

Approach speed 45 mph or more
See Note 9

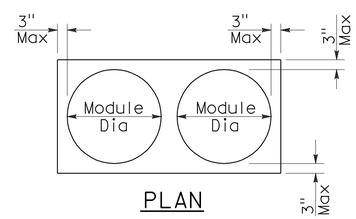

PLAN

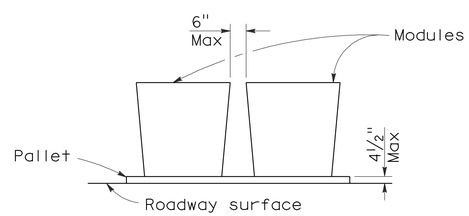

ELEVATION

CRASH CUSHION PALLET DETAIL

See Note 11

NOTES:

1. (XXX) Indicates sand filled module location and weight of sand in pounds for each module. Module spacing is based on the greater diameter of the module.
2. All sand weights are nominal.
3. The temporary crash cushion arrays shown on this plan shall be used only in locations where there will be traffic on one side of the temporary crash cushion array.
4. If the fixed object or approach end of the temporary railing is less than 15'-0" from the edge of traveled way, a temporary crash cushion is required in a construction or work zone.
5. Temporary crash cushion arrays shall not encroach on the traveled way.
6. Arrays for median shoulders shall conform to details shown on this plan for outside shoulders.
7. Place the Type P marker panel so that the bottom of the panel rests upon the pallet and faces traffic.
8. Refer to Standard Plan A73B for marker details.
9. For shoulder widths less than 8'-0", appropriate approved crash cushion protection, other than sand filled modules, shall be provided at fixed objects and at approach ends of temporary railing. The specific type of crash cushion shall be as shown on the project plans or as specified in the Special Provisions, or if not shown on the project plans or specified in the Special Provisions, shall be as approved by the Engineer.
10. Approach speeds indicated conform to NCHRP 350 Report criteria.
11. Use of pallets is optional.

STATE OF CALIFORNIA
DEPARTMENT OF TRANSPORTATION

TEMPORARY CRASH CUSHION, SAND FILLED (SHOULDER INSTALLATIONS)

NO SCALE

RSP T2 DATED JUNE 6, 2008 SUPERSEDES STANDARD PLAN T2
DATED MAY 1, 2006 - PAGE 213 OF THE STANDARD PLANS BOOK DATED MAY 2006.

REVISED STANDARD PLAN RSP T2

2006 REVISED STANDARD PLAN RSP T2

5-15-08

Dist	COUNTY	ROUTE	POST MILES TOTAL PROJECT	SHEET No.	TOTAL SHEETS
12	Ora	55	17.0/17.7	37	39

Randell D. Hiatt
REGISTERED CIVIL ENGINEER

May 20, 2011
PLANS APPROVAL DATE

REGISTERED PROFESSIONAL ENGINEER
Randell D. Hiatt
No. C50200
Exp. 6-30-11
CIVIL
STATE OF CALIFORNIA

The State of California or its officers or agents shall not be responsible for the accuracy or completeness of electronic copies of this plan sheet.

To accompany plans dated 4-16-12

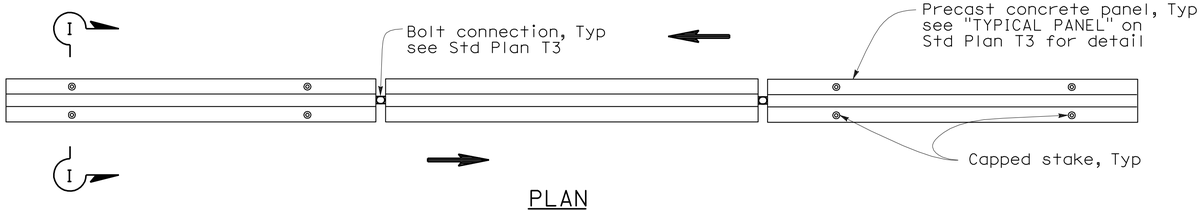

PLAN

RAILING STAKING CONFIGURATION FOR TWO-WAY TRAFFIC

See Note 1

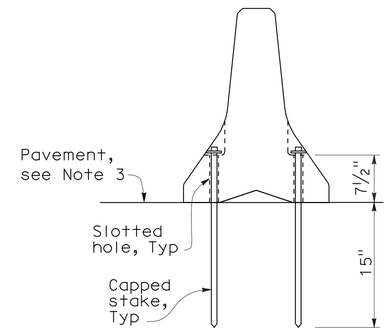

SECTION I-I

NOTES:

1. Where Type K Temporary Railing is placed as a temporary or long term barrier in two-way traffic on highways with less than 24" from the edge of traveled way, use four capped stakes per every other panel with end panels staked.
2. Where Type K Temporary Railing is placed 3" to 24" from the edge of an excavation on highways, use two capped stakes per panel along the traffic side.
3. Staked Type K Temporary Railing must be supported by at least 4" thick concrete, hot mix asphalt or existing asphalt concrete pavement.
4. The minimum yield strength for the washer must be 60,000 psi.
5. Direction of adjacent traffic indicated by ⟹.

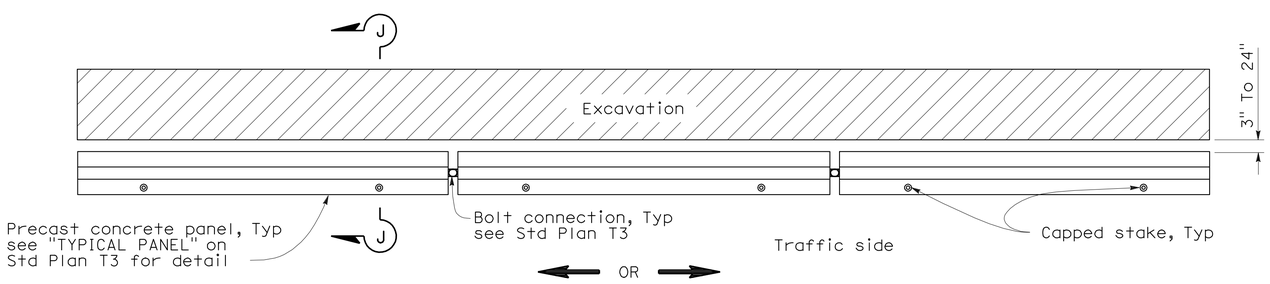

PLAN

RAILING STAKING CONFIGURATION ADJACENT TO AN EXCAVATION

See Note 2

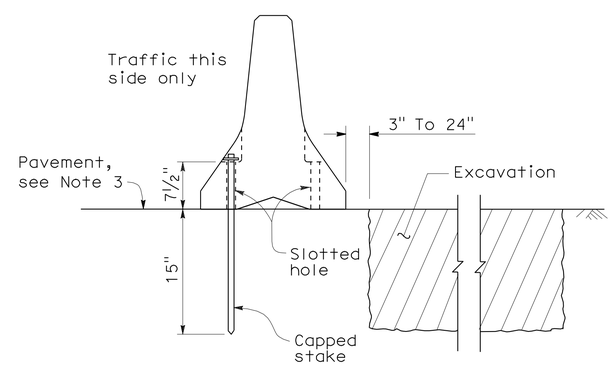

SECTION J-J

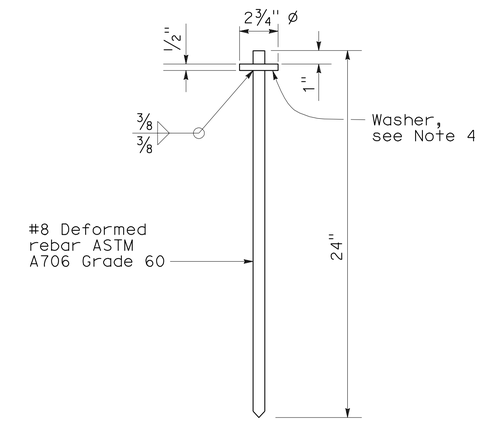

CAPPED STAKE DETAIL

STATE OF CALIFORNIA
DEPARTMENT OF TRANSPORTATION

TEMPORARY RAILING (TYPE K)

NO SCALE

NSP T3A DATED MAY 20, 2011 SUPPLEMENTS THE STANDARD PLANS BOOK DATED MAY 2006.

NEW STANDARD PLAN NSP T3A

2006 NEW STANDARD PLAN NSP T3A

DIST	COUNTY	ROUTE	POST MILES TOTAL PROJECT	SHEET NO.	TOTAL SHEETS
12	Ora	55	17.0/17.7	38	39

LICENSED LANDSCAPE ARCHITECT

April 3, 2009
PLANS APPROVAL DATE

The State of California or its officers or agents shall not be responsible for the accuracy or completeness of electronic copies of this plan sheet.

LICENSED LANDSCAPE ARCHITECT — Robert B. Schott — Signature — 11-30-10 Renewal Date — 2-25-09 Date — STATE OF CALIFORNIA

To accompany plans dated 4-16-12

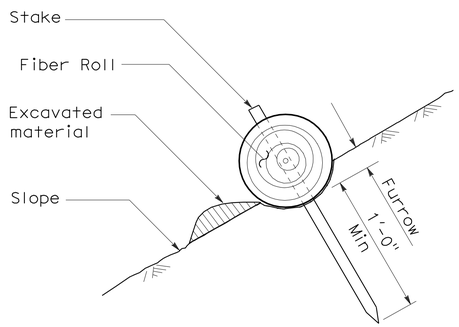

SECTION

TEMPORARY FIBER ROLL (TYPE 1)

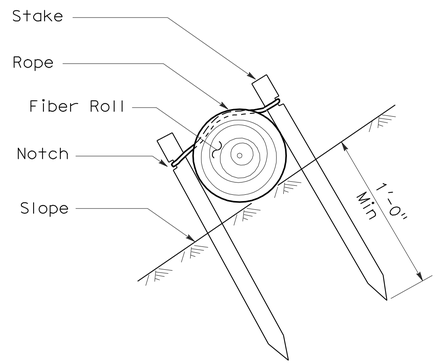

SECTION

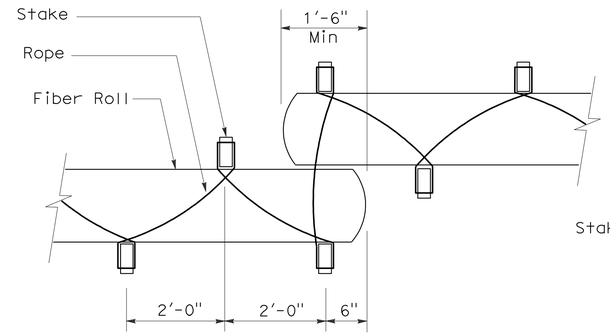

PLAN

TEMPORARY FIBER ROLL (TYPE 2)

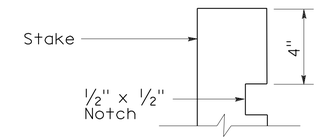

ELEVATION

STAKE NOTCH DETAIL

NOTES:

1. Temporary fiber roll spacing varies depending upon slope inclination.
2. Installations shown in the perspectives are for slope inclination of 10:1 and steeper.

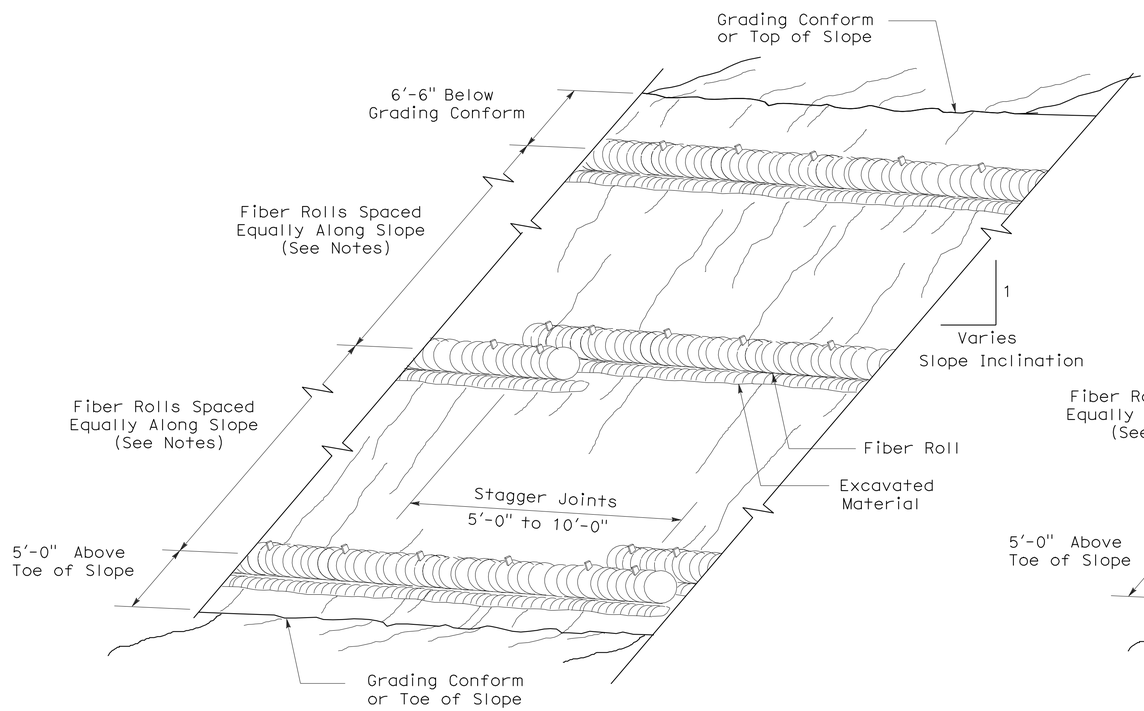

PERSPECTIVE

TEMPORARY FIBER ROLL (TYPE 1)

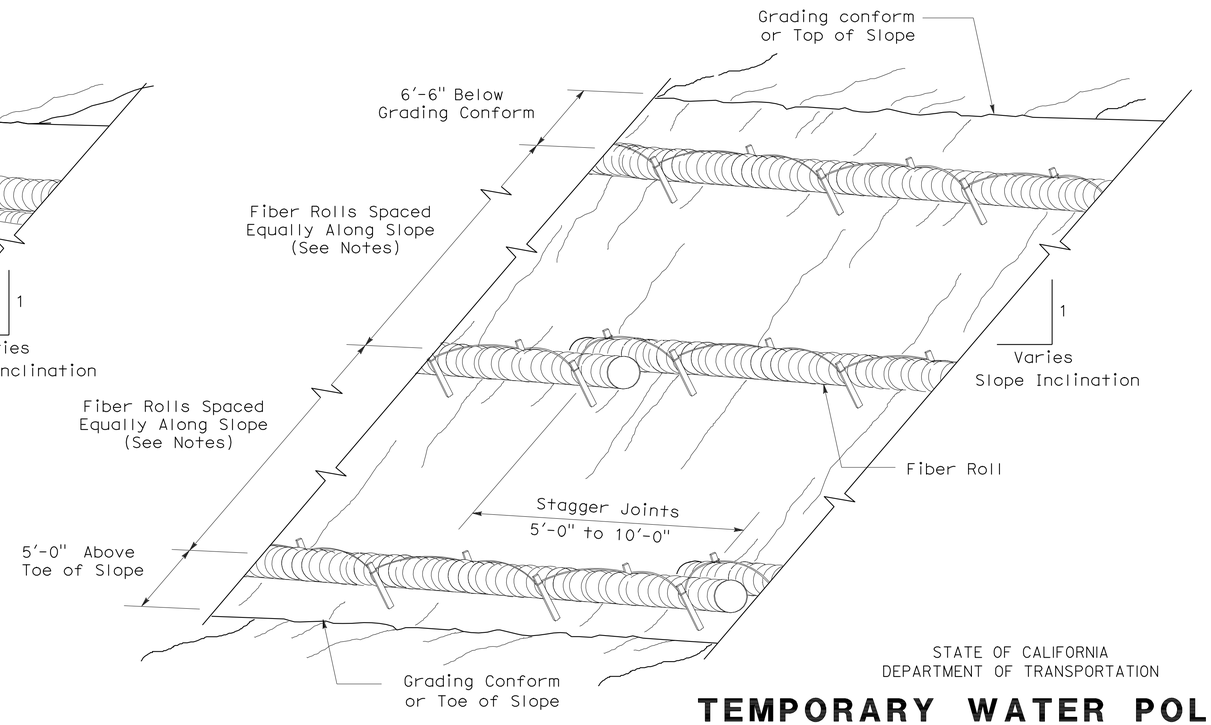

PERSPECTIVE

TEMPORARY FIBER ROLL (TYPE 2)

STATE OF CALIFORNIA
DEPARTMENT OF TRANSPORTATION

TEMPORARY WATER POLLUTION CONTROL DETAILS (TEMPORARY FIBER ROLL)

NO SCALE

RSP T56 DATED APRIL 3, 2009 SUPERSEDES STANDARD PLAN T56
DATED MAY 1, 2006 - PAGE 232 OF THE STANDARD PLANS BOOK DATED MAY 2006.

REVISED STANDARD PLAN RSP T56

2006 REVISED STANDARD PLAN RSP T56

2-23-09

DIST	COUNTY	ROUTE	POST MILES TOTAL PROJECT	SHEET NO.	TOTAL SHEETS
12	Ora	55	17.0/17.7	39	39

LICENSED LANDSCAPE ARCHITECT

August 15, 2008
PLANS APPROVAL DATE

LICENSED LANDSCAPE ARCHITECT — Robert B. Schott 3025 — Signature 11-04-08 Renewal Date — 08-11-08 Date — STATE OF CALIFORNIA

The State of California or its officers or agents shall not be responsible for the accuracy or completeness of electronic copies of this plan sheet.

To accompany plans dated 4-16-12

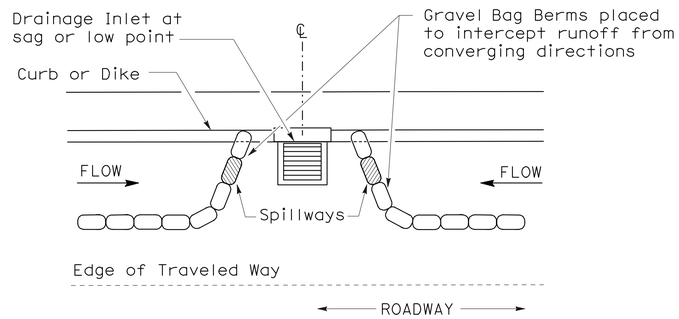

PLAN

CONFIGURATION FOR SAG POINT INLET (GRAVEL BAG BERM)

GRAVEL BAG BERM (TYPE 3A) SPACING TABLE

SLOPE OF ROADWAY (PERCENT)	1 to 3.9	4 to 5.9	6 to 7.9	8 to 10	10+
INTERVAL BETWEEN BERM	100′	75′	50′	25′	12′

For slope of less than 1%, install barriers only if erosion/sediment is prevalent

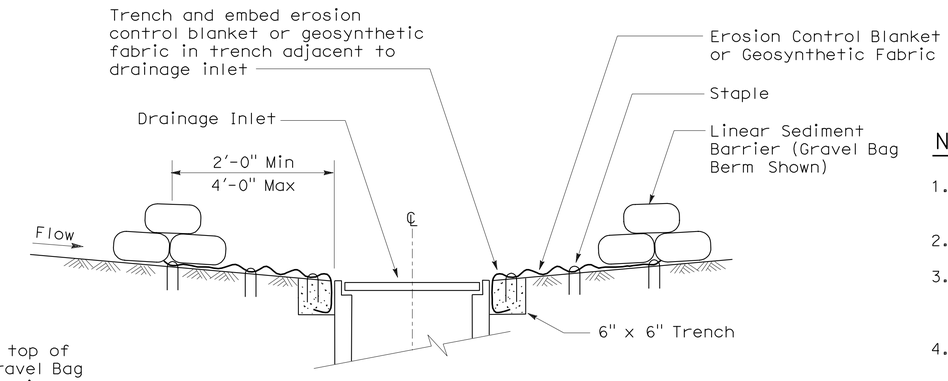

SECTION A-A

NOTES:

1. Place safety cones adjacent to drainage inlet protection.
2. Dimensions may vary to fit field conditions.
3. Install a minimum of 3 gravel bag berms upstream of each drainage inlet to be protected.
4. Position erosion control blanket or geosynthetic fabric at edge of concrete apron and secure in trench.
5. Erosion control blanket or geosynthetic fabric is not required if the area adjacent to the drainage inlet is vegetated or paved.

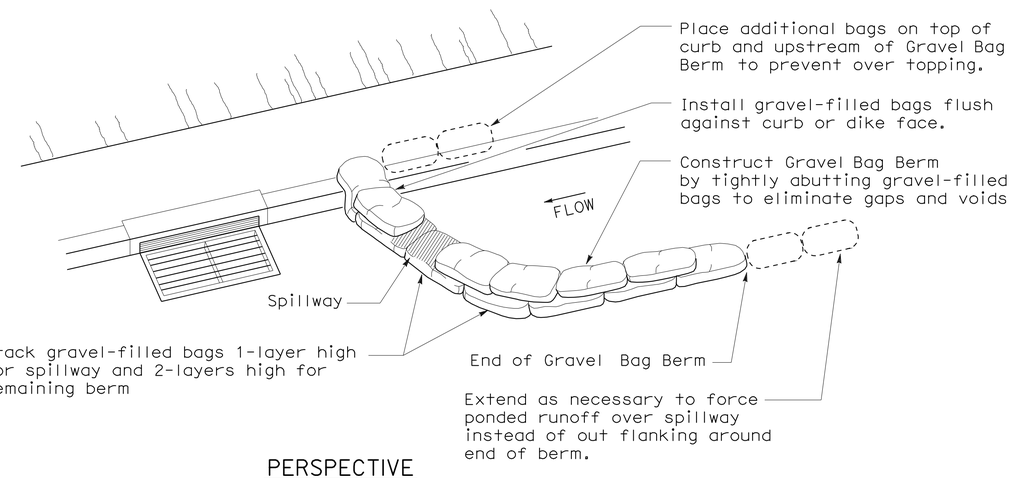

PERSPECTIVE

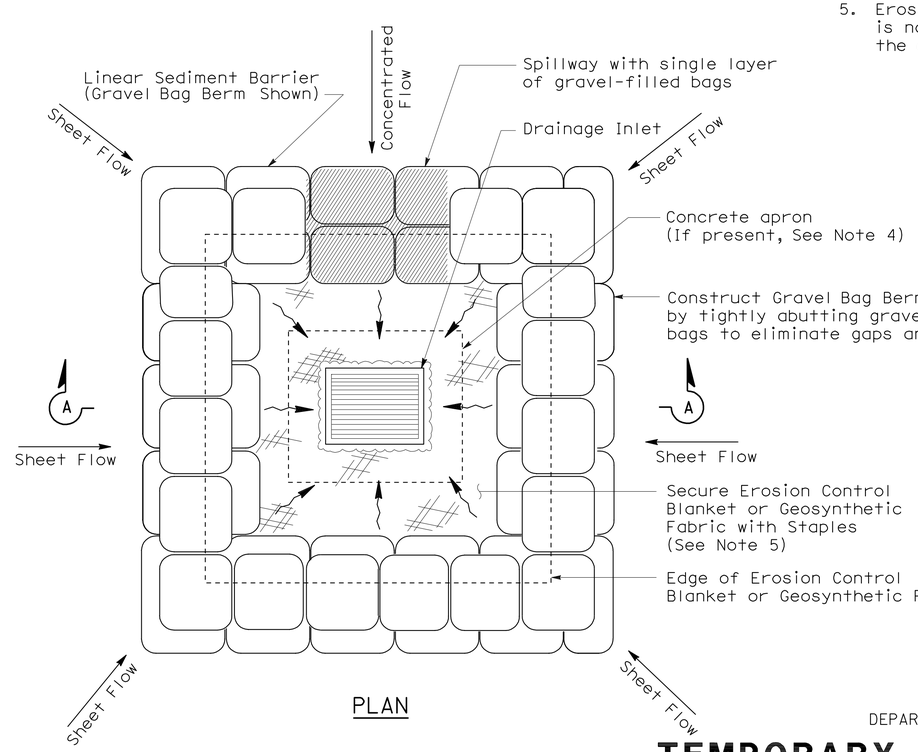

PLAN

TEMPORARY DRAINAGE INLET PROTECTION (TYPE 3B)

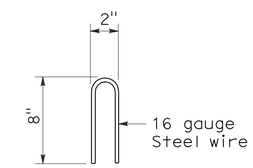

STAPLE DETAIL

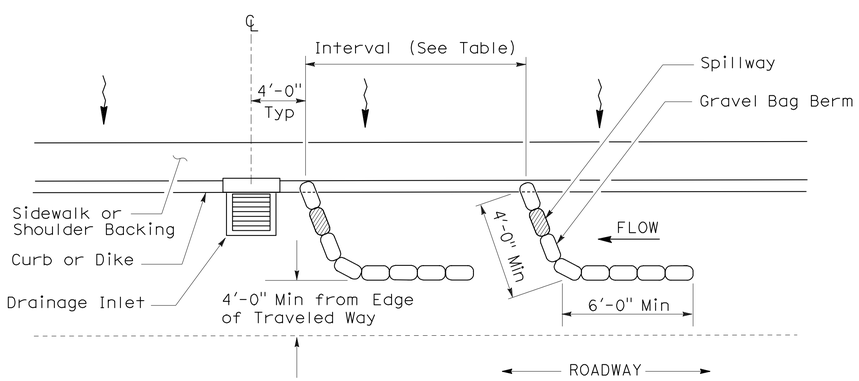

PLAN

TEMPORARY DRAINAGE INLET PROTECTION (TYPE 3A) (GRAVEL BAG BERM)

STATE OF CALIFORNIA
DEPARTMENT OF TRANSPORTATION

TEMPORARY WATER POLLUTION CONTROL DETAILS (TEMPORARY DRAINAGE INLET PROTECTION)

NO SCALE

NSP T62 DATED AUGUST 15, 2008 SUPPLEMENTS THE STANDARD PLANS BOOK DATED MAY 2006.

NEW STANDARD PLAN NSP T62

2006 NEW STANDARD PLAN NSP T62

7-11-08