Dist	COUNTY	ROUTE	POST MILES TOTAL PROJECT	SHEET No.	TOTAL SHEETS
12	Ora	91	9.1/15.1	601	949

Mina Zolfaghari 08-12-10
REGISTERED ELECTRICAL ENGINEER DATE

10-25-10
PLANS APPROVAL DATE

REGISTERED PROFESSIONAL ENGINEER MINA ZOLFAGHARI No. E 16816 Exp. 12/31/10 ELECTRICAL STATE OF CALIFORNIA

THE STATE OF CALIFORNIA OR ITS OFFICERS OR AGENTS SHALL NOT BE RESPONSIBLE FOR THE ACCURACY OR COMPLETENESS OF SCANNED COPIES OF THIS PLAN SHEET.

FOR ACCURATE RIGHT OF WAY AND ACCESS DATA,
CONTACT RIGHT OF WAY ENGINEERING AT THE DISTRICT OFFICE.

NOTES: (THIS SHEET ONLY)

1. FOR GENERAL NOTES, LEGEND, AND ABBREVIATIONS, SEE SHEET E-1 AND E-2.

2. INSTALL TEMPORARY AERIAL 60 SMFO AND 12 MMFO WITH 25′ CLEARANCE.

3. SEE SHEET SES-9 FOR DETAIL.

4. SPLICE TEMPORARY FOC TO EXISTING FOC, SEE SHEET E-32 FOR SPLICING DETAIL.

5. INSTALL OVERHEAD TEMPORARY 3 #300 MCM AND 1#2 WITH 25′ CLEARANCE.

6. EXISTING TYPE III-BF SERVICE EQUIPMENT ENCLOSURE WITH 3 BRANCH BREAKER (NO METER).

7. EXISTING TYPE III-BF SERVICE EQUIPMENT ENCLOSURE WITH 200 A, 480 V, 3P, CB MAIN.

8. EXISTING OCTA 62 smfo, CALTRANS 72 smfo PROTECT IN PLACE

9. EXISTING OCTA 3" C, 96 smfo AND 16 mmfo; CALTRANS 4" C, 72 smfo TO EXISTING VAULT 27 AT STATION 352+10, PROTECT IN PLACE

10. EXISTING OCTA 158 smfo, 16 mmfo, 50 FEET OF THE EXISTING FIBER OPTIC CABLES TO BE CUT AND COILED IN VAULT 26A

11. EXISTING OCTA 158 smfo, 16 mmfo, 50 FEET OF THE EXISTING FIBER OPTIC CABLES TO BE CUT AND COILED IN VAULT 26

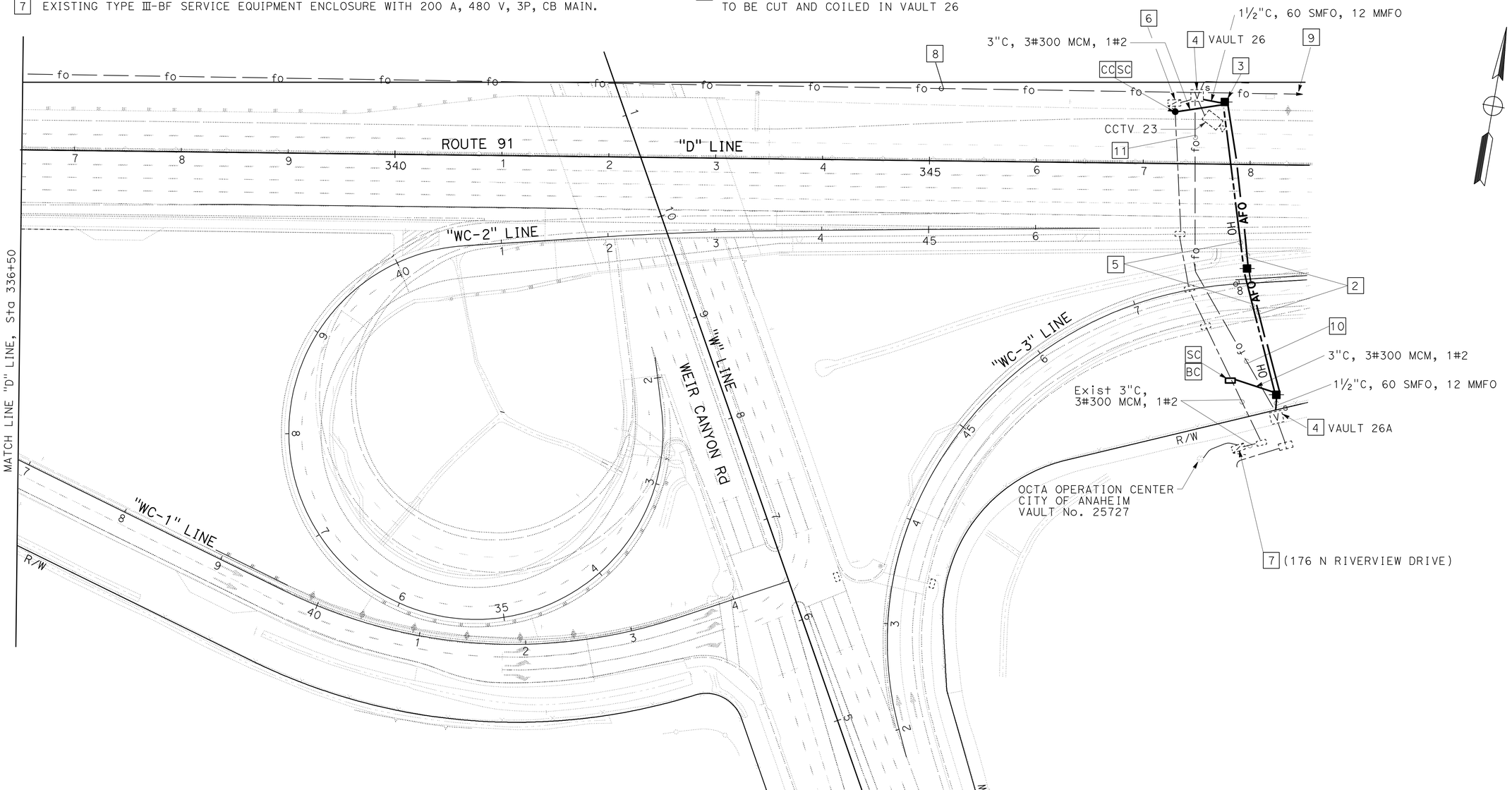

COMMUNICATION SYSTEM - OCTA (TEMPORARY)

SCALE: 1" = 50′

E-26

THIS PLAN IS ACCURATE FOR ELECTRICAL WORK ONLY.

STATE OF CALIFORNIA - DEPARTMENT OF TRANSPORTATION
Caltrans® ELECTRICAL DESIGN

FUNCTIONAL SUPERVISOR: SHAHRAM SHAHRIARI
CALCULATED-DESIGNED BY: MINA ZOLFAGHARI
CHECKED BY: VANESSA TRUONG
REVISED BY
DATE REVISED

LAST REVISION 05-11-10
DATE PLOTTED => 17-DEC-2010
TIME PLOTTED => 09:53

Dist	COUNTY	ROUTE	POST MILES TOTAL PROJECT	SHEET No.	TOTAL SHEETS
12	Ora	91	9.1/15.1	602	949

Mina Zolfaghari 08-12-10
REGISTERED ELECTRICAL ENGINEER DATE

10-25-10
PLANS APPROVAL DATE

REGISTERED PROFESSIONAL ENGINEER
MINA ZOLFAGHARI
No. E 16816
Exp. 12/31/10
ELECTRICAL
STATE OF CALIFORNIA

THE STATE OF CALIFORNIA OR ITS OFFICERS OR AGENTS SHALL NOT BE RESPONSIBLE FOR THE ACCURACY OR COMPLETENESS OF SCANNED COPIES OF THIS PLAN SHEET.

FOR ACCURATE RIGHT OF WAY AND ACCESS DATA,
CONTACT RIGHT OF WAY ENGINEERING AT THE DISTRICT OFFICE.

NOTES: (THIS SHEET ONLY)

1. FOR GENERAL NOTES, LEGEND, AND ABBREVIATIONS, SEE SHEET E-1 AND E-2.

2 SEE SHEET E-31 FOR FIBER ASSIGNMENT TABLE.

3 EXISTING OCTA 3"C, 38 smfo AND 8 mmfo, CALTRANS 4"C, 72 smfo TO EXISTING VAULT 27 AT STATION 352+10, PROTECT IN PLACE.

4 EXISTING OCTA 3"C, 46 smfo, CALTRANS 4"C, 72 smfo. 50 FEET OF THE EXISTING FIBER OPTIC CABLES TO BE CUT AND COILED IN VAULT 28.

5 AT VAULT 28, EXISTING 38 smfo IS SPLICED IN TO EXISTING OCTA 3"C, 46 smfo.

6 GUY WIRE, 17' HORIZONTAL OFFSET.

7 SEE SHEET SES-10.

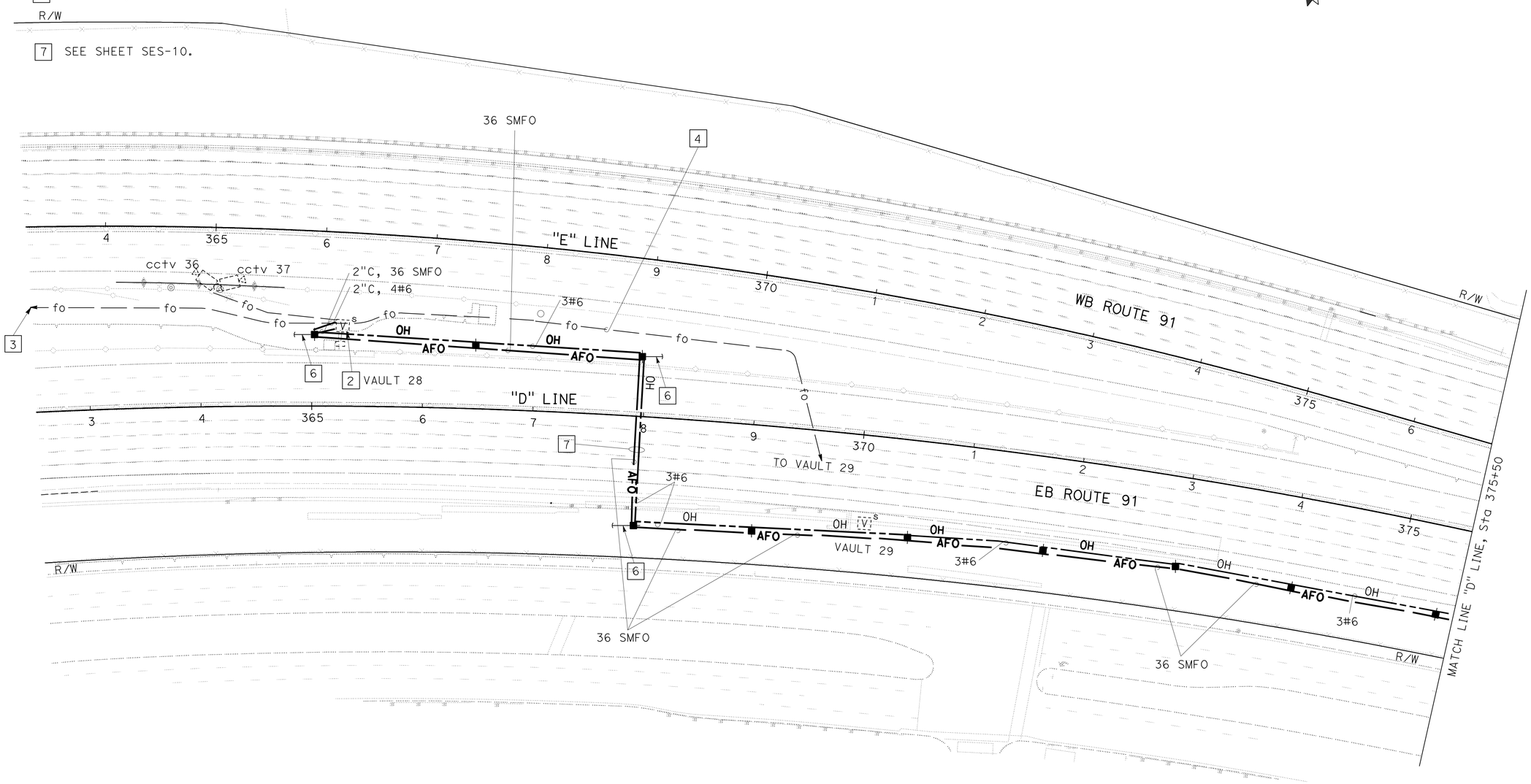

COMMUNICATION SYSTEM - OCTA (TEMPORARY)

SCALE: 1" = 50'

E-27

THIS PLAN IS ACCURATE FOR ELECTRICAL WORK ONLY.

STATE OF CALIFORNIA - DEPARTMENT OF TRANSPORTATION
Caltrans® ELECTRICAL DESIGN

FUNCTIONAL SUPERVISOR: SHAHRAM SHAHRIARI
CALCULATED-DESIGNED BY: MINA ZOLFAGHARI
CHECKED BY: VANESSA TRUONG
REVISED BY
DATE REVISED

LAST REVISION 05-11-10
DATE PLOTTED => 17-DEC-2010
TIME PLOTTED => 09:53

BORDER LAST REVISED 4/11/2008
RELATIVE BORDER SCALE IS IN INCHES 0 1 2 3
USERNAME => trmikesl
DGN FILE => c0g330ua027.dgn
CU 12390
EA 0G3301

Dist	COUNTY	ROUTE	POST MILES TOTAL PROJECT	SHEET No.	TOTAL SHEETS
12	Ora	91	9.1/15.1	603	949

Mina Zolfaghari 08-12-10
REGISTERED ELECTRICAL ENGINEER DATE

10-25-10
PLANS APPROVAL DATE

REGISTERED PROFESSIONAL ENGINEER
MINA ZOLFAGHARI
No. E 16816
Exp. 12/31/10
ELECTRICAL
STATE OF CALIFORNIA

THE STATE OF CALIFORNIA OR ITS OFFICERS OR AGENTS SHALL NOT BE RESPONSIBLE FOR THE ACCURACY OR COMPLETENESS OF SCANNED COPIES OF THIS PLAN SHEET.

FOR ACCURATE RIGHT OF WAY AND ACCESS DATA,
CONTACT RIGHT OF WAY ENGINEERING AT THE DISTRICT OFFICE.

NOTES: (THIS SHEET ONLY)

1. FOR GENERAL NOTES, LEGEND, AND ABBREVIATIONS, SEE SHEET E-1 AND E-2.

[2] SEE SHEET E-31 FOR FIBER ASSIGNMENT TABLE.

[3] EXISTING OCTA 3"C, 46 smfo, CALTRANS 4"C, 72 smfo.
50 FEET OF THE EXISTING FIBER OPTIC CABLES TO BE CUT AND COILED IN VAULT 30.

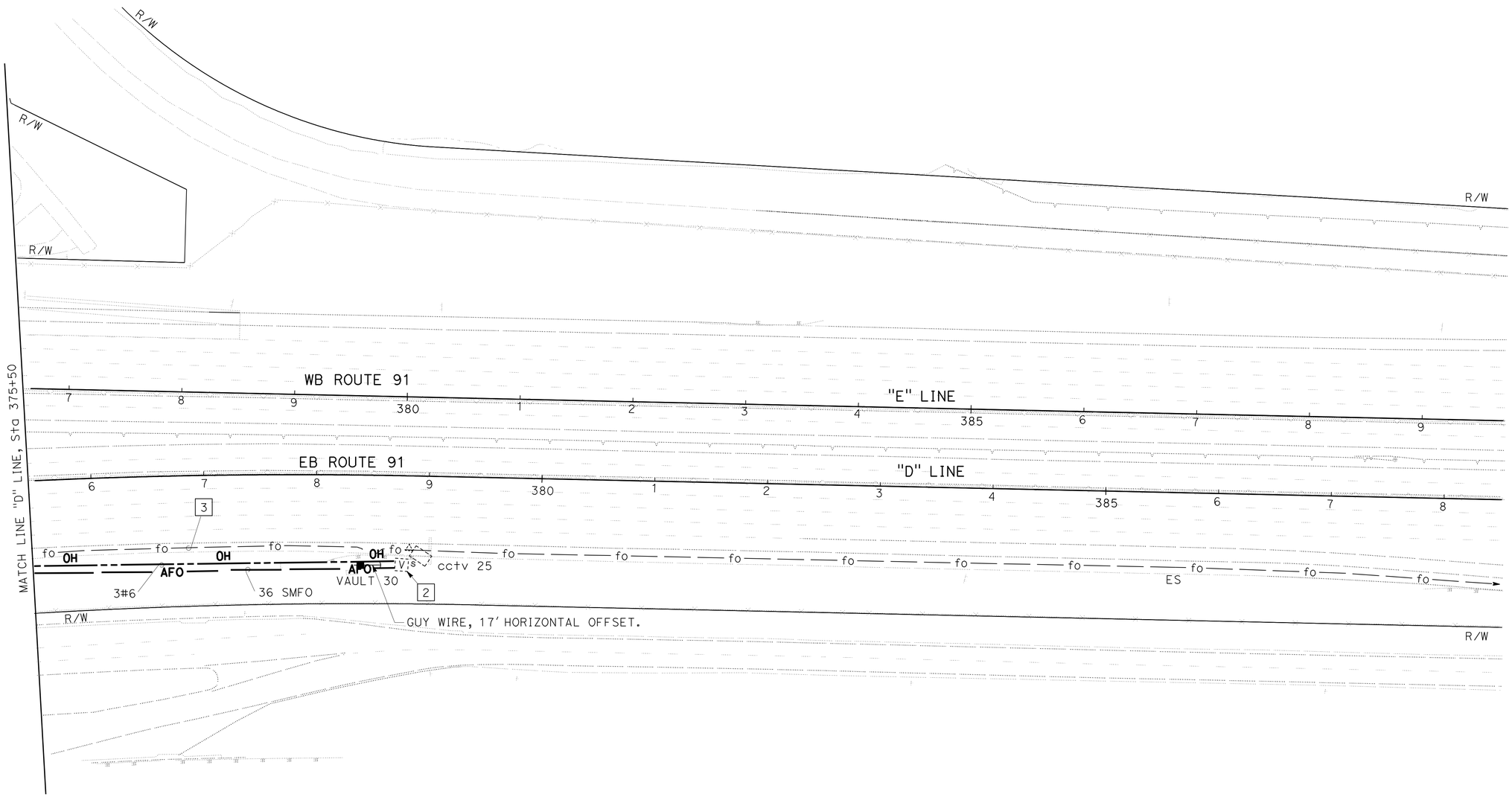

COMMUNICATION SYSTEM - OCTA (TEMPORARY)

SCALE: 1" = 50'

E-28

THIS PLAN IS ACCURATE FOR ELECTRICAL WORK ONLY.

STATE OF CALIFORNIA - DEPARTMENT OF TRANSPORTATION
Caltrans® **ELECTRICAL DESIGN**

FUNCTIONAL SUPERVISOR: SHAHRAM SHAHRIARI
CALCULATED-DESIGNED BY: MINA ZOLFAGHARI
CHECKED BY: VANESSA TRUONG
REVISED BY
DATE REVISED

LAST REVISION 05-11-10
DATE PLOTTED => 17-DEC-2010
TIME PLOTTED => 09:53

Dist	COUNTY	ROUTE	POST MILES TOTAL PROJECT	SHEET No.	TOTAL SHEETS
12	Ora	91	9.1/15.1	604	949

Mina Zolfaghari 08-12-10
REGISTERED ELECTRICAL ENGINEER DATE

10-25-10
PLANS APPROVAL DATE

REGISTERED PROFESSIONAL ENGINEER MINA ZOLFAGHARI No. E 16816 Exp. 12/31/10 ELECTRICAL STATE OF CALIFORNIA

THE STATE OF CALIFORNIA OR ITS OFFICERS OR AGENTS SHALL NOT BE RESPONSIBLE FOR THE ACCURACY OR COMPLETENESS OF SCANNED COPIES OF THIS PLAN SHEET.

NOTE: (THIS SHEET ONLY)

FOR GENERAL NOTES, LEGEND, AND ABBREVIATIONS, SEE SHEET E-1 AND E-2.

LEGEND:

- ● SPLICE
- — — — — EXISTING FIBER OPTIC CABLE
- ——— TEMPORARY AERIAL FIBER OPTIC CABLE

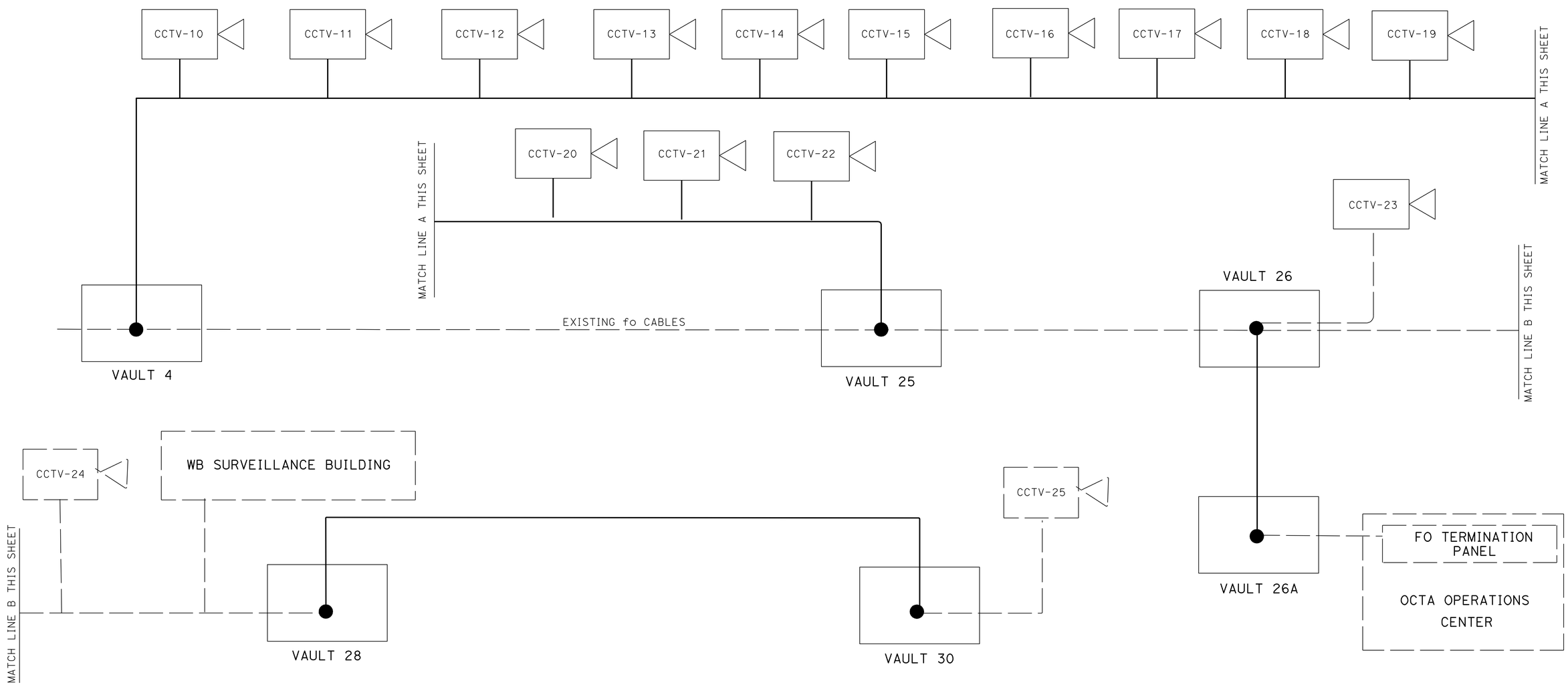

COMMUNICATION SYSTEM - OCTA (TEMPORARY)

(ELEMENT SCHEMATIC)

E-29

NO SCALE

THIS PLAN IS ACCURATE FOR ELECTRICAL WORK ONLY.

STATE OF CALIFORNIA - DEPARTMENT OF TRANSPORTATION
Caltrans® ELECTRICAL DESIGN

FUNCTIONAL SUPERVISOR: SHAHRAM SHAHRIARI
CALCULATED-DESIGNED BY: MINA ZOLFAGHARI
CHECKED BY: VANESSA TRUONG
REVISED BY
DATE REVISED

LAST REVISION 05-11-10
DATE PLOTTED => 16-DEC-2010
TIME PLOTTED => 17:11

Dist	COUNTY	ROUTE	POST MILES TOTAL PROJECT	SHEET No.	TOTAL SHEETS
12	Ora	91	9.1/15.1	605	949

Mina Zolfaghari 08-12-10
REGISTERED ELECTRICAL ENGINEER DATE

10-25-10
PLANS APPROVAL DATE

REGISTERED PROFESSIONAL ENGINEER MINA ZOLFAGHARI No. E 16816 Exp. 12/31/10 ELECTRICAL STATE OF CALIFORNIA

THE STATE OF CALIFORNIA OR ITS OFFICERS OR AGENTS SHALL NOT BE RESPONSIBLE FOR THE ACCURACY OR COMPLETENESS OF SCANNED COPIES OF THIS PLAN SHEET.

NOTES: (THIS SHEET ONLY)

1. FOR GENERAL NOTES, LEGEND, AND ABBREVIATIONS, SEE SHEET E-1 AND E-2.
2. HYBRID CABLE CONSISTS OF:
   - CAMERA CONTROL CONDUCTORS
   - AC LINE
   - VIDEO (COAX)
3. THE MINIMUM VERTICAL DISTANCE BETWEEN TEMPORARY 480 V OVERHEAD CONDUCTORS AND TEMPORARY AERIAL FOC SHALL BE 40".

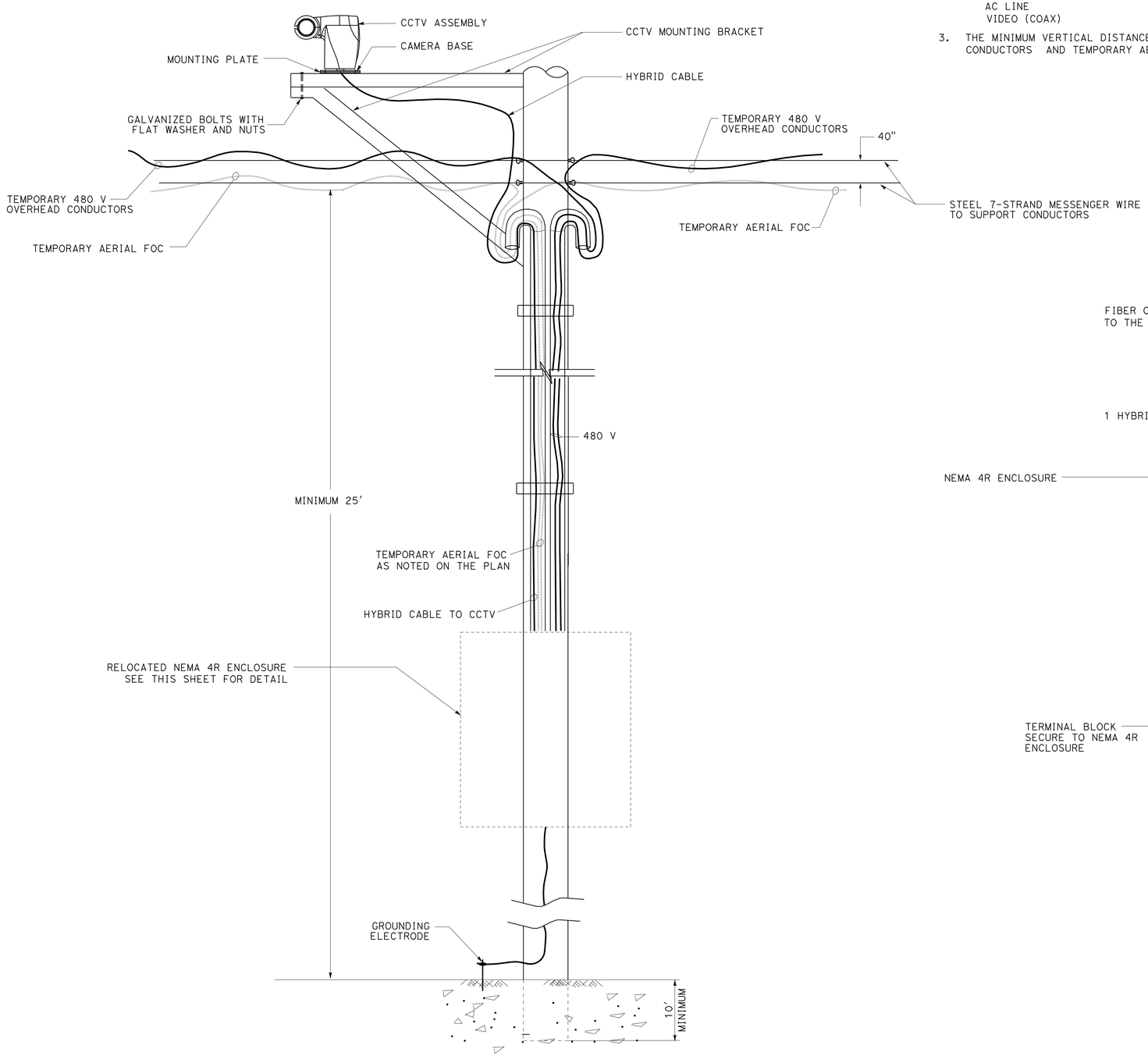

FIBER OPTIC AND CCTV POLE TYPICAL DETAIL

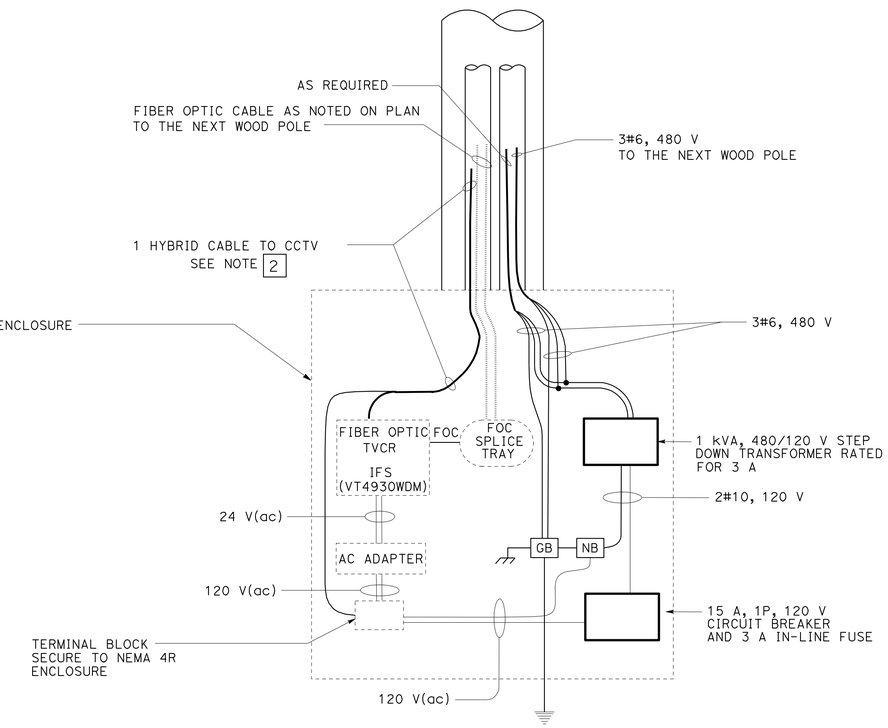

NEMA 4R ENCLOSURE TYPICAL DETAIL

COMMUNICATION SYSTEM - OCTA (TEMPORARY)

(TYPICAL FIBER OPTIC AND CCTV POLE DETAIL)

NO SCALE

THIS PLAN IS ACCURATE FOR ELECTRICAL WORK ONLY.

E-30

STATE OF CALIFORNIA - DEPARTMENT OF TRANSPORTATION
Caltrans® ELECTRICAL DESIGN

FUNCTIONAL SUPERVISOR: SHAHRAM SHAHRIARI
CALCULATED-DESIGNED BY: MINA ZOLFAGHARI
CHECKED BY: VANESSA TRUONG
REVISED BY
DATE REVISED

LAST REVISION 05-11-10
DATE PLOTTED => 17-DEC-2010
TIME PLOTTED => 13:24

Dist	COUNTY	ROUTE	POST MILES TOTAL PROJECT	SHEET No.	TOTAL SHEETS
12	Ora	91	9.1/15.1	606	949

REGISTERED ELECTRICAL ENGINEER — DATE: 08-12-10

PLANS APPROVAL DATE: 10-25-10

REGISTERED PROFESSIONAL ENGINEER — PETER NGO — No. E 16503 — Exp. 9/30/11 — ELECTRICAL — STATE OF CALIFORNIA

THE STATE OF CALIFORNIA OR ITS OFFICERS OR AGENTS SHALL NOT BE RESPONSIBLE FOR THE ACCURACY OR COMPLETENESS OF ELECTRONIC COPIES OF THIS PLAN SHEET.

NOTE: (THIS SHEET ONLY)

1. FOR GENERAL NOTES, LEGENDS, AND ABBREVIATIONS, SEE SHEET E-1 AND E-2.

EXISTING ELEMENTS AND CIRCUITS	EXISTING OCTA 26 SMFO FIBER No.	EXISTING CT 72 SMFO FIBER No.	VAULT 47 NORTH SIDE OF SR-91	24 TEMPORARY SMFO FIBER No.	EXISTING OCTA 32 SMFO FIBER No.	VAULT 4 EAST SIDE OF SR-55	12 TEMPORARY SMFO FIBER No.	WOOD POLE AT VAULT 5	48 TEMPORARY SMFO FIBER No.	CCTV-10	CCTV-11	CCTV-12	CCTV-13	CCTV-14	CCTV-15	CCTV-16	CCTV-17	CCTV-18	CCTV-19	CCTV-20	CCTV-21	CCTV-22	48 TEMPORARY SMFO FIBER No.	VAULT 25	EXISTING OCTA 62 SMFO	EXISTING CT 72 SMFO	EXISTING CT 72 SMFO FIBER No.	EXISTING OCTA 46 SMFO FIBER No.	VAULT 28	36 TEMPORARY SMFO FIBER No.	VAULT 30	EXISTING OCTA 46 SMFO FIBER No.	EXISTING CT 72 SMFO FIBER No.	EXISTING ELEMENTS AND CIRCUITS
CCTV-9	7		<>	1				<>	1														1	<>	43			17	<>	1	<>	17		CT-E-2
CCTV-3	8		<>	2				<>	2														2	<>	44			18	<>	2	<>	18		CT-E-1
CCTV-4	9		<>	3				<>	3														3	<>	45			23	<>	3	<>	23		CT NS 1
CCTV-2	10		<>	4				<>	4														4	<>	46			24	<>	4	<>	24		CT NS 2
CCTV-1	11		<>	5				<>	5														5	<>	47			26	<>	5	<>	26		CCTV-25
VMS-91W-2	12		<>	6				<>	6														6	<>	49			27	<>	6	<>	27		CCTV-26
VMS-91W-1	14		<>	7				<>	7														7	<>	50			28	<>	7	<>	28		CCTV-27
ER SR-91W-4	15		<>	8				<>	8														8	<>	51			29	<>	8	<>	29		CCTV-28
ER SR-91W-3	16		<>	9				<>	9														9	<>	52			30	<>	9	<>	30		CCTV-29
ER SR-91W-2	17		<>	10				<>	10														10	<>	53			31	<>	10	<>	31		CCTV-30
ER SR-91W-1	18		<>	11				<>	11														11	<>	54			32	<>	11	<>	32		CCTV-31
				12					12	1>													12	<>	30			33	<>	12	<>	33		CCTV-32
									13		1>												13	<>	37			34	<>	13	<>	34		CCTV-33
									14			1>											14	<>	38			35	<>	14	<>	35		ER-91E2-4
									15				1>										15	<>	39			36	<>	15	<>	36		ER-91E2-3
									16					1>									16	<>	40			37	<>	16	<>	37		ER-91E2-2
									17						1>								17	<>	41			38	<>	17	<>	38		ER-91E2-1
									18							1>							18	<>	42			39	<>	18	<>	39		ER-91E1-4
									19								1>						19	<>	1			40	<>	19	<>	40		ER-91E1-3
									20									1>					20	<>	2			41	<>	20	<>	41		ER-91E1-2
									21										1>				21	<>	3			42	<>	21	<>	42		ER-91E1-1
									22											1>			22	<>	4			43	<>	22	<>	43		CCTV-34
									23												1>		23	<>	5			44	<>	23	<>	44		CCTV-35
CCTV-22									24													1>	24	<>	6			45		24	<>	45		VMS-91E-2
TMS 6086		41	<>	13				<>	25														25	<>				46	<>	25	<>	46		VMS-91E-1
TMS 6086		42	<>	14				<>	26														26	<>					<>	26				
TMS 6091		43	<>	15				<>	27														27	<>		41	41		<>	27	<>		41	TMS 6086
TMS 6091		44	<>	16				<>	28														28	<>		42	42		<>	28	<>		42	TMS 6086
TMS 6095		45	<>	17				<>	29														29	<>		43	43		<>	29	<>		43	TMS 6091
TMS 6095		46	<>	18				<>	30														30	<>		44	44		<>	30	<>		44	TMS 6091
TMS 41		7	<>	19				<>	31														31	<>		45	45		<>	31	<>		45	TMS 6095
TMS 41		8	<>	20				<>	32														32	<>		46	46		<>	32	<>		46	TMS 6095
CT HUB 6-HUB 2		33	<>	21				<>	33														33	<>		33	33		<>	33	<>		33	
CT HUB 6-HUB 2		34	<>	22				<>	34														34	<>		34	34		<>	34	<>		34	CT HUB 6-HUB 2
RMS 30		1	<>	23				<>	35														35	<>		1	1		<>	35	<>		1	RMS 30
RMS 30		2	<>	24				<>	36														36	<>		2	2		<>	36	<>		2	RMS 30
							1		37														37											
							2		38														38											
VWS-55-1					28	<>	3	<>	39														39	<>	36									
VMS-55-2					27	<>	4	<>	40														40	<>	35									
ER SR-55-1					26	<>	5	<>	41														41	<>	34									
ER SR-55-2					25	<>	6	<>	42														42	<>	33									
ER SR-55-3					24	<>	7	<>	43														43	<>	32									
ER SR-55-4					23	<>	8	<>	44														44	<>	31									
CCTV-8					21	<>	9	<>	45														45	<>	29									
CCTV-6					20	<>	10	<>	46														46	<>	28									
CCTV-5					19	<>	11	<>	47														47	<>	27									
CCTV-7					18	<>	12	<>	48														48	<>	26									
	VAULT 47				VAULT 4			VAULT 6																VAULT 25			VAULT 28			VAULT 30			

LEGEND: < > ARROW POINTS TO THE DIRECTION OF TRANSMISSION.

X > 1 OR 2 IS EQUAL TO NUMBER OF STRANDS OF TYPE D FO CABLE.

THIS PLAN IS ACCURATE FOR ELECTRICAL WORK ONLY.

COMMUNICATION SYSTEM - OCTA (TEMPORARY)

(FIBER ASSIGNMENT TABLE)

E-31

REVISED BY: PETER NGO — DATE REVISED:

CALCULATED-DESIGNED BY: PAULINE NGUYEN — CHECKED BY:

FUNCTIONAL SUPERVISOR: HENRY PHAM

STATE OF CALIFORNIA - DEPARTMENT OF TRANSPORTATION — ELECTRICAL SYSTEMS — Caltrans

LAST REVISION 03-01-10 — DATE PLOTTED => 16-DEC-2010 — TIME PLOTTED => 17:11

Dist	COUNTY	ROUTE	POST MILES TOTAL PROJECT	SHEET No.	TOTAL SHEETS
12	Ora	91	9.1/15.1	607	949

Peter Ngo 08-12-10
REGISTERED ELECTRICAL ENGINEER DATE

10-25-10
PLANS APPROVAL DATE

REGISTERED PROFESSIONAL ENGINEER
PETER NGO
No. E 16503
Exp 9/30/11
ELECTRICAL
STATE OF CALIFORNIA

THE STATE OF CALIFORNIA OR ITS OFFICERS OR AGENTS SHALL NOT BE RESPONSIBLE FOR THE ACCURACY OR COMPLETENESS OF ELECTRONIC COPIES OF THIS PLAN SHEET.

NOTES: (THIS SHEET ONLY)

1) FO SPLICING AT VAULT 26 AND 26A SHALL BE DONE AT THE SAME TIME TO MINIMIZE DOWN TIME (8 HOURS MAXIMUM)
2) EXISTING 96 smfo FO CABLE STRAND No. 6 TO 8 IS IN THE GREEN TUBE.

TEMPORARY FIBER SPLICING DETAILS AT VAULT 26 AND VAULT 26A

	EXISTING 96 smfo FROM VAULT 26 FIBER No.	60 SMFO and 12 MMFO FROM VAULT 26 TO VAULT 26A FIBER No.	EXISTING 96 smfo AT VAULT 26A FIBER No.	
	6-8	1-3	6-8	
	13-24	4-15	13-24	
	31-36	16-21	31-36	
	39-40	22-23	39-40	
	43-48	24-29	43-48	
	53-73	30-50	53-73	
	92-96	51-54	92-96	
EXISTING 16 mmfo FROM VAULT 27	1-6	1-6	1-6	EXISTING 16 mmfo TO OCTA TOC
	9-14	7-12	9-14	

FOR GENERAL NOTES, LEGEND, AND ABBREVIATIONS, SEE SHEET E-1 AND E-2.

COMMUNICATION SYSTEM - OCTA (TEMPORARY)

(FIBER ASSIGNMENT TABLE)

THIS PLAN IS ACCURATE FOR ELECTRICAL WORK ONLY.

E-32

STATE OF CALIFORNIA - DEPARTMENT OF TRANSPORTATION
Caltrans
ELECTRICAL SYSTEMS

FUNCTIONAL SUPERVISOR: HENRY PHAM
CALCULATED-DESIGNED BY: PETER NGO
CHECKED BY: PAULINE NGUYEN
REVISED BY
DATE REVISED

LAST REVISION 03-01-10
DATE PLOTTED => 16-DEC-2010
TIME PLOTTED => 17:11

Dist	COUNTY	ROUTE	POST MILES TOTAL PROJECT	SHEET No.	TOTAL SHEETS
12	Ora	91	9.1/15.1	608	949

08-12-10
REGISTERED ELECTRICAL ENGINEER DATE

10-25-10
PLANS APPROVAL DATE

REGISTERED PROFESSIONAL ENGINEER
F. HORMOZI
No. E14460
Exp. 6/30/12
ELECTRICAL
STATE OF CALIFORNIA

THE STATE OF CALIFORNIA OR ITS OFFICERS OR AGENTS SHALL NOT BE RESPONSIBLE FOR THE ACCURACY OR COMPLETENESS OF SCANNED COPIES OF THIS PLAN SHEET.

FOR ACCURATE RIGHT OF WAY AND ACCESS DATA,
CONTACT RIGHT OF WAY ENGINEERING AT THE DISTRICT OFFICE.

NOTE: (SHEETS E-33 TO E-42)

1. MVDS LOCATIONS SHOWN ON PLANS ARE APPROXIMATE. ACTUAL LOCATIONS WILL BE DETERMINED BY YHE ENGINEER.

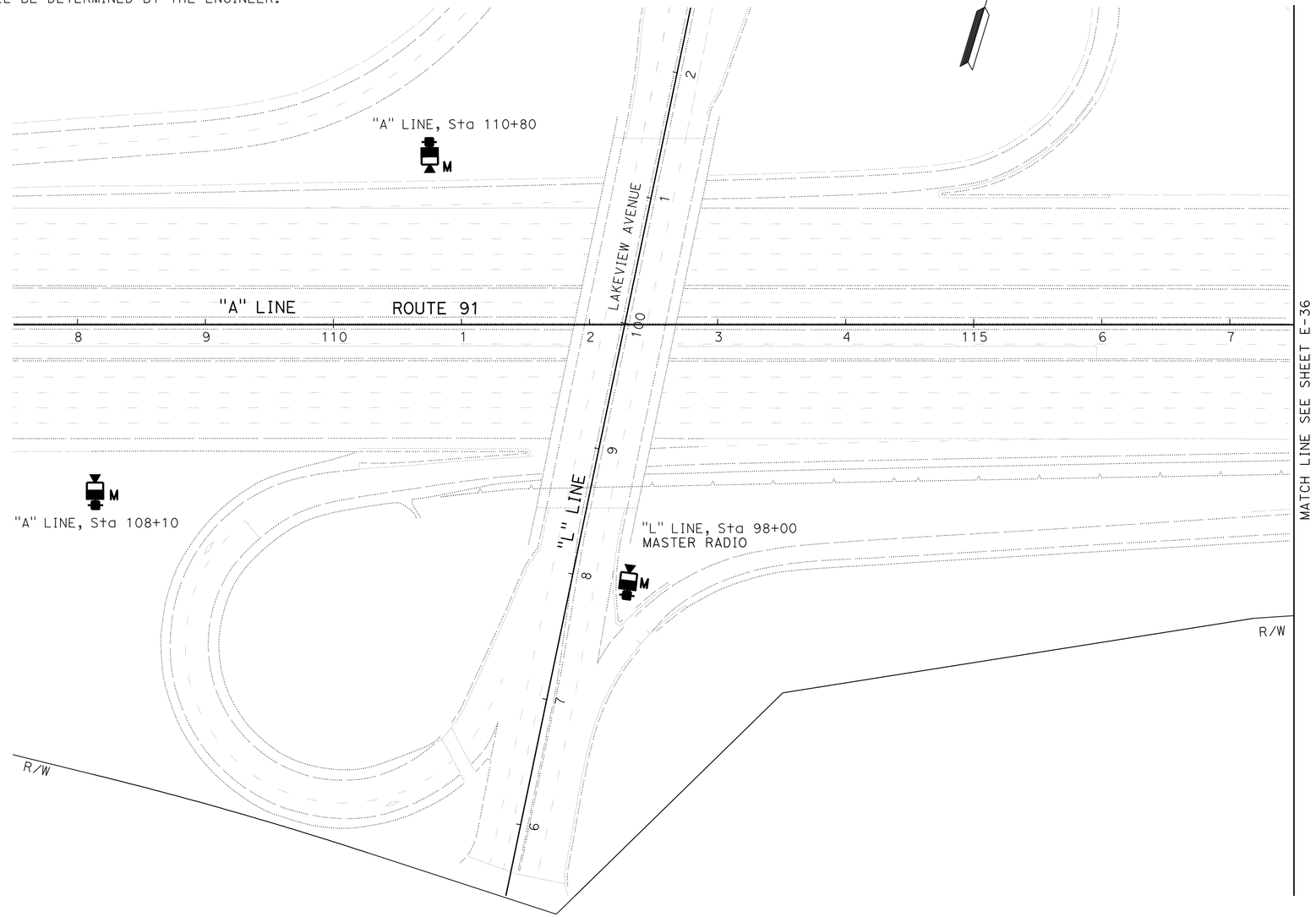

MICROWAVE VEHICLE DETECTION SYSTEM (TEMPORARY)

SCALE: 1" = 50'

THIS PLAN IS ACCURATE FOR ELECTRICAL WORK ONLY.

E-33

STATE OF CALIFORNIA - DEPARTMENT OF TRANSPORTATION
Caltrans® **ELECTRICAL DESIGN**

FUNCTIONAL SUPERVISOR: SHAHRAM SHAHRIARI

CALCULATED-DESIGNED BY: FEDRICO HORMOZI
CHECKED BY: SHAHRAM SHAHRIARI

REVISED BY
DATE REVISED

LAST REVISION 05-25-10
DATE PLOTTED => 16-DEC-2010
TIME PLOTTED => 17:11

Dist	COUNTY	ROUTE	POST MILES TOTAL PROJECT	SHEET No.	TOTAL SHEETS
12	Ora	91	9.1/15.1	609	949

REGISTERED ELECTRICAL ENGINEER 08-12-10 DATE

10-25-10
PLANS APPROVAL DATE

REGISTERED PROFESSIONAL ENGINEER
F. HORMOZI
No. E14460
Exp 6/30/12
ELECTRICAL
STATE OF CALIFORNIA

THE STATE OF CALIFORNIA OR ITS OFFICERS OR AGENTS SHALL NOT BE RESPONSIBLE FOR THE ACCURACY OR COMPLETENESS OF SCANNED COPIES OF THIS PLAN SHEET.

FOR ACCURATE RIGHT OF WAY AND ACCESS DATA,
CONTACT RIGHT OF WAY ENGINEERING AT THE DISTRICT OFFICE.

MICROWAVE VEHICLE DETECTION SYSTEM (TEMPORARY)

SCALE: 1" = 50'

THIS PLAN IS ACCURATE FOR ELECTRICAL WORK ONLY.

E-34

STATE OF CALIFORNIA - DEPARTMENT OF TRANSPORTATION
Caltrans® **ELECTRICAL DESIGN**

FUNCTIONAL SUPERVISOR: SHAHRAM SHAHRIARI
CALCULATED-DESIGNED BY: FEDRICO HORMOZI
CHECKED BY: SHAHRAM SHAHRIARI
REVISED BY
DATE REVISED

LAST REVISION 05-25-10
DATE PLOTTED => 16-DEC-2010
TIME PLOTTED => 17:11

Dist	COUNTY	ROUTE	POST MILES TOTAL PROJECT	SHEET No.	TOTAL SHEETS
12	Ora	91	9.1/15.1	610	949

REGISTERED ELECTRICAL ENGINEER 08-12-10 DATE

10-25-10
PLANS APPROVAL DATE

REGISTERED PROFESSIONAL ENGINEER
F. HORMOZI
No. E14460
Exp 6/30/12
ELECTRICAL
STATE OF CALIFORNIA

THE STATE OF CALIFORNIA OR ITS OFFICERS OR AGENTS SHALL NOT BE RESPONSIBLE FOR THE ACCURACY OR COMPLETENESS OF SCANNED COPIES OF THIS PLAN SHEET.

FOR ACCURATE RIGHT OF WAY AND ACCESS DATA,
CONTACT RIGHT OF WAY ENGINEERING AT THE DISTRICT OFFICE.

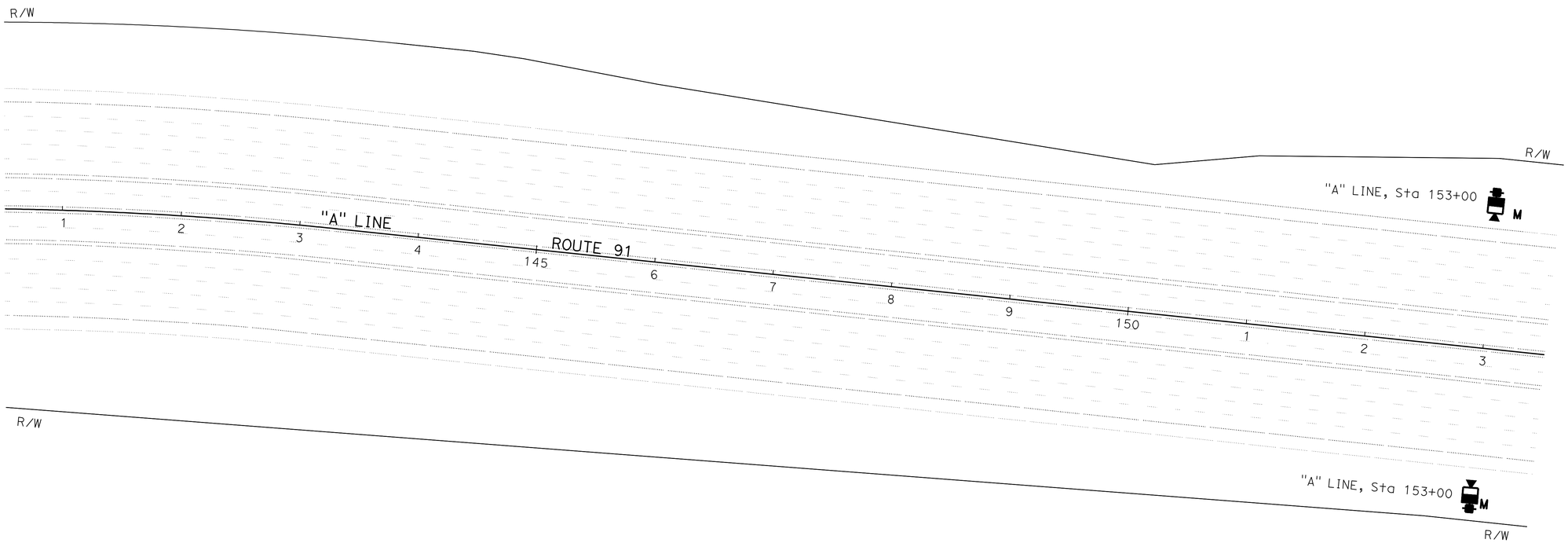

MICROWAVE VEHICLE DETECTION SYSTEM (TEMPORARY)

SCALE: 1" = 50'

THIS PLAN IS ACCURATE FOR ELECTRICAL WORK ONLY.

E-35

REVISED BY	FEDRICO HORMOZI
DATE REVISED	SHAHRAM SHAHRIARI
CALCULATED-DESIGNED BY	
CHECKED BY	
FUNCTIONAL SUPERVISOR	SHAHRAM SHAHRIARI

STATE OF CALIFORNIA - DEPARTMENT OF TRANSPORTATION
Caltrans® **ELECTRICAL DESIGN**

LAST REVISION 05-25-10 | DATE PLOTTED => 16-DEC-2010 | TIME PLOTTED => 17:11

Dist	COUNTY	ROUTE	POST MILES TOTAL PROJECT	SHEET No.	TOTAL SHEETS
12	Ora	91	9.1/15.1	611	949

08-12-10
REGISTERED ELECTRICAL ENGINEER DATE

10-25-10
PLANS APPROVAL DATE

REGISTERED PROFESSIONAL ENGINEER
F. HORMOZI
No. E14460
Exp. 6/30/12
ELECTRICAL
STATE OF CALIFORNIA

THE STATE OF CALIFORNIA OR ITS OFFICERS OR AGENTS SHALL NOT BE RESPONSIBLE FOR THE ACCURACY OR COMPLETENESS OF SCANNED COPIES OF THIS PLAN SHEET.

FOR ACCURATE RIGHT OF WAY AND ACCESS DATA,
CONTACT RIGHT OF WAY ENGINEERING AT THE DISTRICT OFFICE.

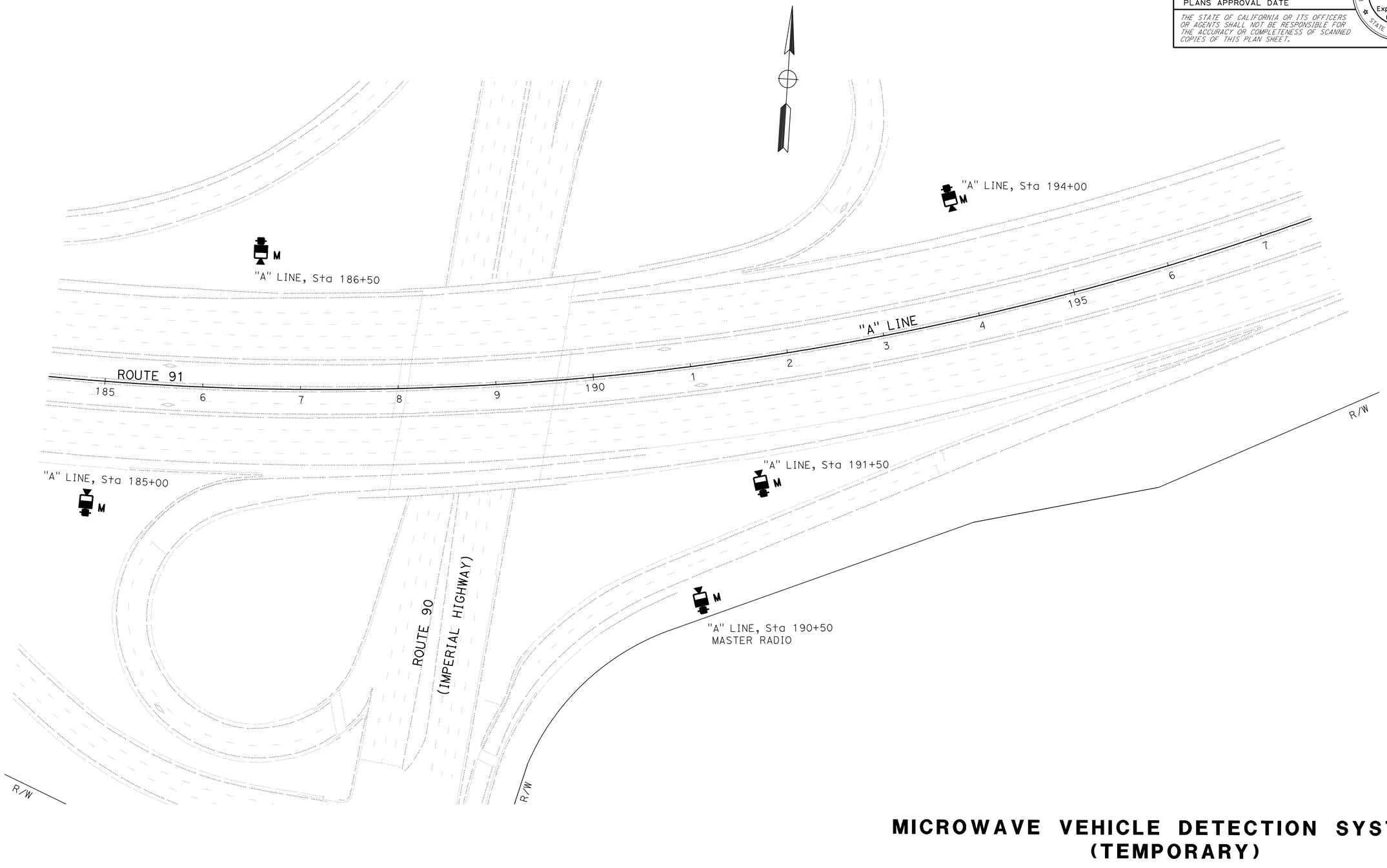

MICROWAVE VEHICLE DETECTION SYSTEM (TEMPORARY)

SCALE: 1" = 50'

THIS PLAN IS ACCURATE FOR ELECTRICAL WORK ONLY.

E-36

STATE OF CALIFORNIA - DEPARTMENT OF TRANSPORTATION
Caltrans
ELECTRICAL DESIGN

FUNCTIONAL SUPERVISOR: SHAHRAM SHAHRIARI
CALCULATED-DESIGNED BY: FEDRICO HORMOZI
CHECKED BY: SHAHRAM SHAHRIARI
REVISED BY
DATE REVISED

LAST REVISION 05-25-10
DATE PLOTTED => 16-DEC-2010
TIME PLOTTED => 17:11

Dist	COUNTY	ROUTE	POST MILES TOTAL PROJECT	SHEET No.	TOTAL SHEETS
12	Ora	91	9.1/15.1	612	949

08-12-10
REGISTERED ELECTRICAL ENGINEER DATE

10-25-10
PLANS APPROVAL DATE

REGISTERED PROFESSIONAL ENGINEER
F. HORMOZI
No. E14460
Exp 6/30/12
ELECTRICAL
STATE OF CALIFORNIA

THE STATE OF CALIFORNIA OR ITS OFFICERS OR AGENTS SHALL NOT BE RESPONSIBLE FOR THE ACCURACY OR COMPLETENESS OF SCANNED COPIES OF THIS PLAN SHEET.

FOR ACCURATE RIGHT OF WAY AND ACCESS DATA,
CONTACT RIGHT OF WAY ENGINEERING AT THE DISTRICT OFFICE.

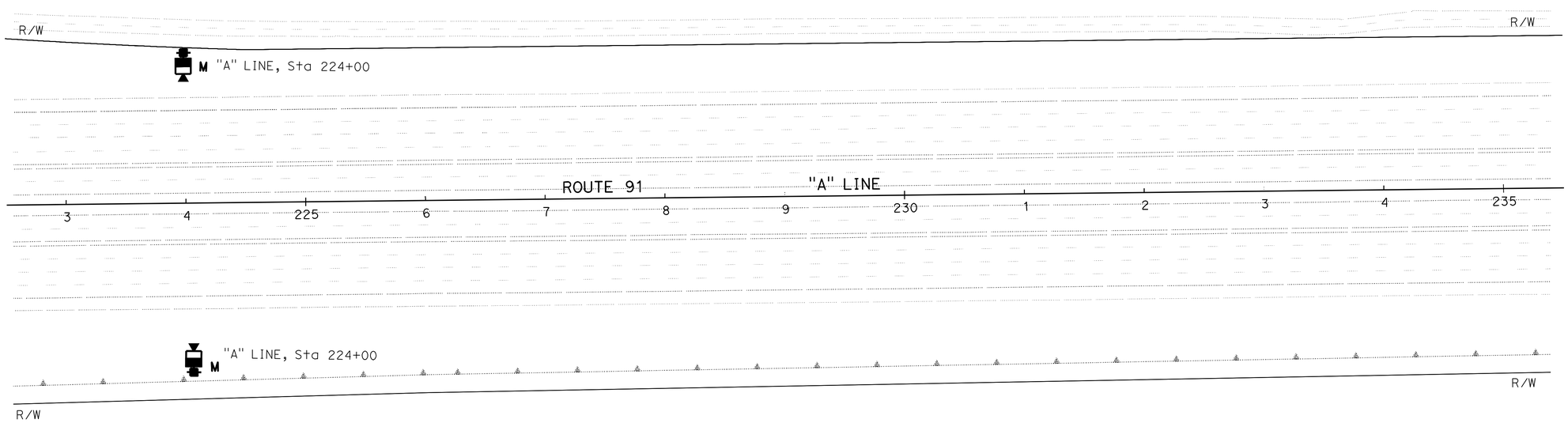

MICROWAVE VEHICLE DETECTION SYSTEM (TEMPORARY)

SCALE: 1" = 50'

E-37

THIS PLAN IS ACCURATE FOR ELECTRICAL WORK ONLY.

STATE OF CALIFORNIA - DEPARTMENT OF TRANSPORTATION
Caltrans
ELECTRICAL DESIGN

FUNCTIONAL SUPERVISOR: SHAHRAM SHAHRIARI

CALCULATED-DESIGNED BY: FEDRICO HORMOZI
CHECKED BY: SHAHRAM SHAHRIARI

REVISED BY
DATE REVISED

LAST REVISION 05-25-10
DATE PLOTTED => 16-DEC-2010
TIME PLOTTED => 17:12

Dist	COUNTY	ROUTE	POST MILES TOTAL PROJECT	SHEET No.	TOTAL SHEETS
12	Ora	91	9.1/15.1	613	949

REGISTERED ELECTRICAL ENGINEER 08-12-10 DATE

10-25-10
PLANS APPROVAL DATE

REGISTERED PROFESSIONAL ENGINEER
F. HORMOZI
No. E14460
Exp. 6/30/12
ELECTRICAL
STATE OF CALIFORNIA

THE STATE OF CALIFORNIA OR ITS OFFICERS OR AGENTS SHALL NOT BE RESPONSIBLE FOR THE ACCURACY OR COMPLETENESS OF SCANNED COPIES OF THIS PLAN SHEET.

FOR ACCURATE RIGHT OF WAY AND ACCESS DATA,
CONTACT RIGHT OF WAY ENGINEERING AT THE DISTRICT OFFICE.

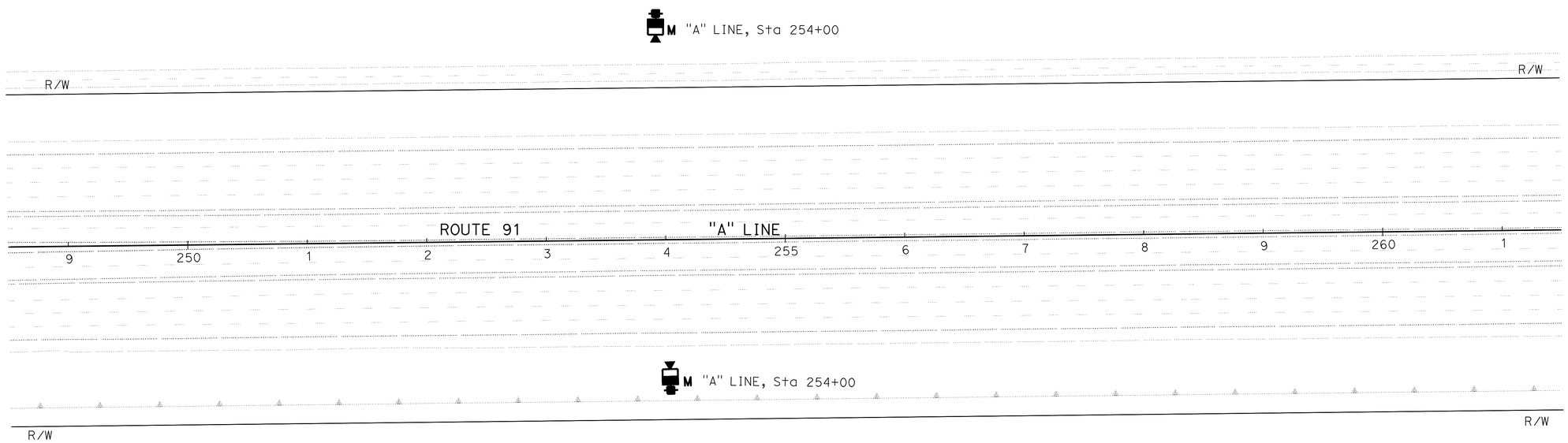

MICROWAVE VEHICLE DETECTION SYSTEM (TEMPORARY)

SCALE: 1" = 50'

THIS PLAN IS ACCURATE FOR ELECTRICAL WORK ONLY.

E-38

REVISED BY	DATE REVISED

FEDRICO HORMOZI — CALCULATED-DESIGNED BY
SHAHRAM SHAHRIARI — CHECKED BY
FUNCTIONAL SUPERVISOR: SHAHRAM SHAHRIARI

STATE OF CALIFORNIA - DEPARTMENT OF TRANSPORTATION
Caltrans® ELECTRICAL DESIGN

LAST REVISION 05-25-10 | DATE PLOTTED => 16-DEC-2010 | TIME PLOTTED => 17:12

Dist	COUNTY	ROUTE	POST MILES TOTAL PROJECT	SHEET No.	TOTAL SHEETS
12	Ora	91	9.1/15.1	614	949

REGISTERED ELECTRICAL ENGINEER 08-12-10 DATE

10-25-10
PLANS APPROVAL DATE

REGISTERED PROFESSIONAL ENGINEER
F. HORMOZI
No. E14460
Exp 6/30/12
ELECTRICAL
STATE OF CALIFORNIA

THE STATE OF CALIFORNIA OR ITS OFFICERS OR AGENTS SHALL NOT BE RESPONSIBLE FOR THE ACCURACY OR COMPLETENESS OF SCANNED COPIES OF THIS PLAN SHEET.

FOR ACCURATE RIGHT OF WAY AND ACCESS DATA,
CONTACT RIGHT OF WAY ENGINEERING AT THE DISTRICT OFFICE.

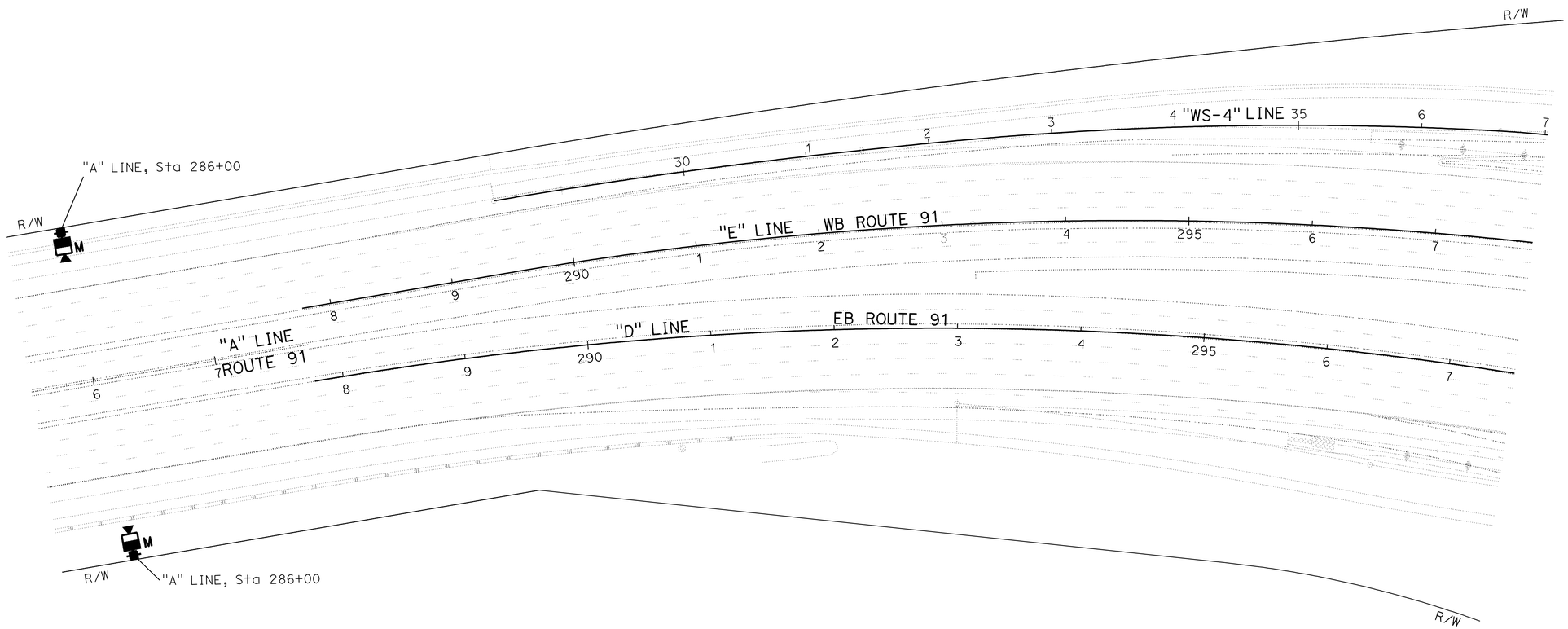

MICROWAVE VEHICLE DETECTION SYSTEM (TEMPORARY)

SCALE: 1" = 50'

THIS PLAN IS ACCURATE FOR ELECTRICAL WORK ONLY.

E-39

STATE OF CALIFORNIA - DEPARTMENT OF TRANSPORTATION
Caltrans
ELECTRICAL DESIGN

FUNCTIONAL SUPERVISOR: SHAHRAM SHAHRIARI
CALCULATED-DESIGNED BY: FEDRICO HORMOZI
CHECKED BY: SHAHRAM SHAHRIARI
REVISED BY
DATE REVISED

LAST REVISION 05-25-10
DATE PLOTTED => 16-DEC-2010
TIME PLOTTED => 17:12

Dist	COUNTY	ROUTE	POST MILES TOTAL PROJECT	SHEET No.	TOTAL SHEETS
12	Ora	91	9.1/15.1	615	949

REGISTERED ELECTRICAL ENGINEER 08-12-10 DATE

10-25-10
PLANS APPROVAL DATE

REGISTERED PROFESSIONAL ENGINEER
F. HORMOZI
No. E14460
Exp 6/30/12
ELECTRICAL
STATE OF CALIFORNIA

THE STATE OF CALIFORNIA OR ITS OFFICERS OR AGENTS SHALL NOT BE RESPONSIBLE FOR THE ACCURACY OR COMPLETENESS OF SCANNED COPIES OF THIS PLAN SHEET.

FOR ACCURATE RIGHT OF WAY AND ACCESS DATA,
CONTACT RIGHT OF WAY ENGINEERING AT THE DISTRICT OFFICE.

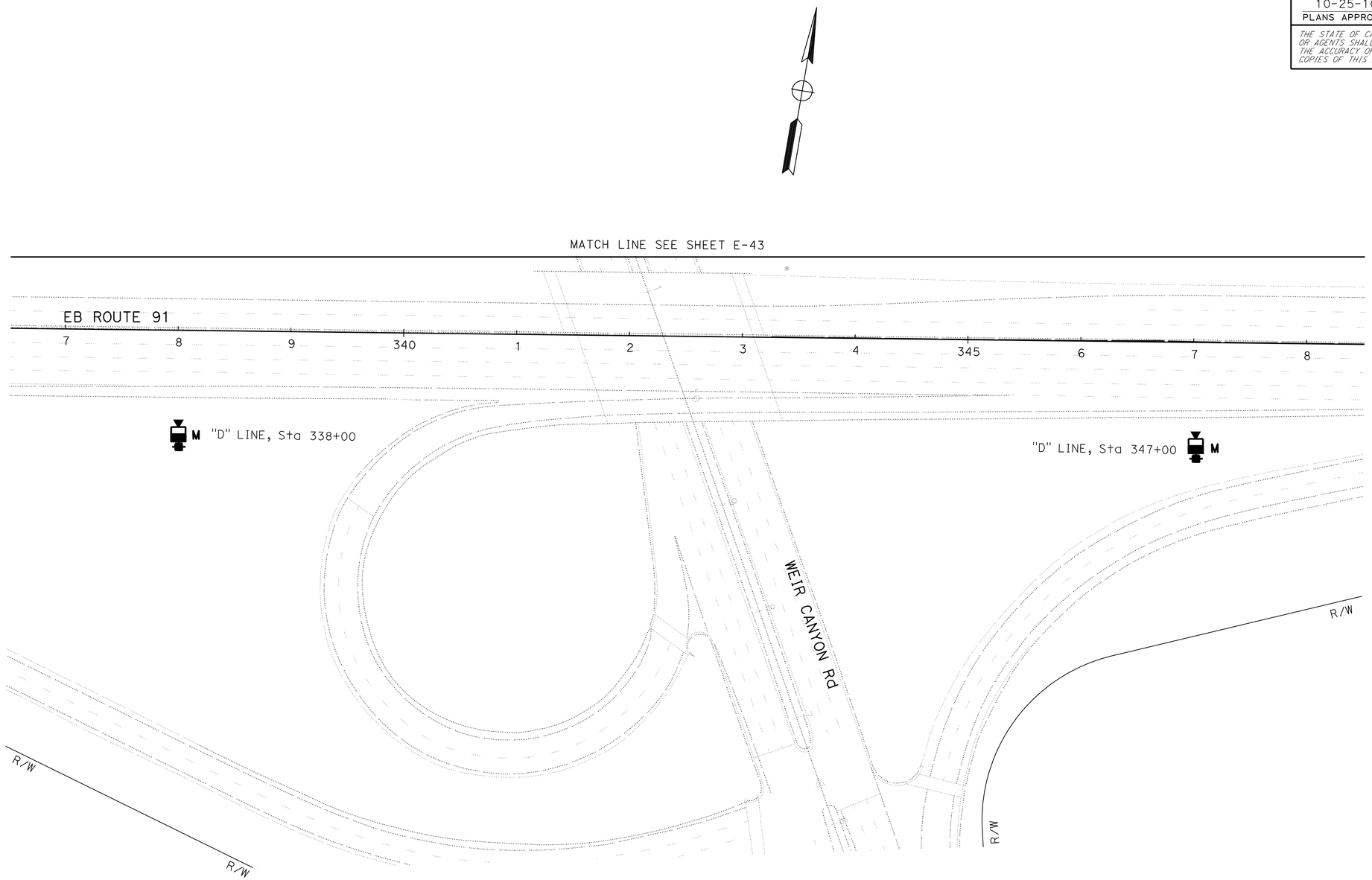

MICROWAVE VEHICLE DETECTION SYSTEM (TEMPORARY)

SCALE: 1" = 50'

THIS PLAN IS ACCURATE FOR ELECTRICAL WORK ONLY.

E-40

REVISED BY | DATE REVISED

FEDRICO HORMOZI | SHAHRAM SHAHRIARI

CALCULATED-DESIGNED BY | CHECKED BY

FUNCTIONAL SUPERVISOR: SHAHRAM SHAHRIARI

STATE OF CALIFORNIA - DEPARTMENT OF TRANSPORTATION
Caltrans® **ELECTRICAL DESIGN**

LAST REVISION 05-25-10 | DATE PLOTTED => 16-DEC-2010 | TIME PLOTTED => 17:12

Dist	COUNTY	ROUTE	POST MILES TOTAL PROJECT	SHEET No.	TOTAL SHEETS
12	Ora	91	9.1/15.1	616	949

REGISTERED ELECTRICAL ENGINEER 08-12-10 DATE

10-25-10
PLANS APPROVAL DATE

REGISTERED PROFESSIONAL ENGINEER
F. HORMOZI
No. E14460
Exp. 6/30/12
ELECTRICAL
STATE OF CALIFORNIA

THE STATE OF CALIFORNIA OR ITS OFFICERS OR AGENTS SHALL NOT BE RESPONSIBLE FOR THE ACCURACY OR COMPLETENESS OF SCANNED COPIES OF THIS PLAN SHEET.

FOR ACCURATE RIGHT OF WAY AND ACCESS DATA,
CONTACT RIGHT OF WAY ENGINEERING AT THE DISTRICT OFFICE.

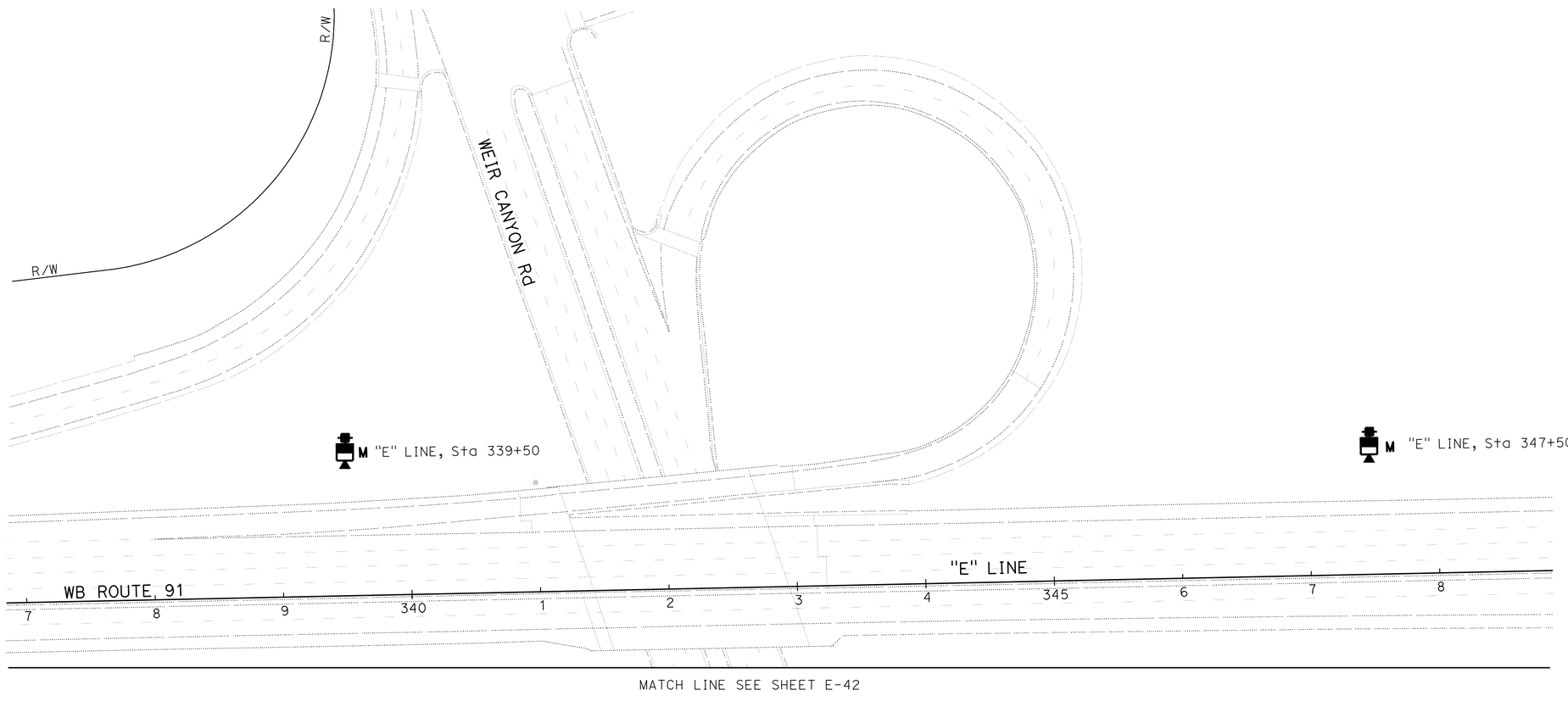

MATCH LINE SEE SHEET E-42

MICROWAVE VEHICLE DETECTION SYSTEM (TEMPORARY)

SCALE: 1" = 50'

THIS PLAN IS ACCURATE FOR ELECTRICAL WORK ONLY.

E-41

STATE OF CALIFORNIA - DEPARTMENT OF TRANSPORTATION
Caltrans® **ELECTRICAL DESIGN**

FUNCTIONAL SUPERVISOR: SHAHRAM SHAHRIARI
CALCULATED-DESIGNED BY: FEDRICO HORMOZI
CHECKED BY: SHAHRAM SHAHRIARI
REVISED BY
DATE REVISED

LAST REVISION 05-25-10
DATE PLOTTED => 16-DEC-2010
TIME PLOTTED => 17:12

Dist	COUNTY	ROUTE	POST MILES TOTAL PROJECT	SHEET No.	TOTAL SHEETS
12	Ora	91	9.1/15.1	617	949

08-12-10
REGISTERED ELECTRICAL ENGINEER DATE

10-25-10
PLANS APPROVAL DATE

REGISTERED PROFESSIONAL ENGINEER
F. HORMOZI
No. E14460
Exp. 6/30/12
ELECTRICAL
STATE OF CALIFORNIA

THE STATE OF CALIFORNIA OR ITS OFFICERS OR AGENTS SHALL NOT BE RESPONSIBLE FOR THE ACCURACY OR COMPLETENESS OF SCANNED COPIES OF THIS PLAN SHEET.

FOR ACCURATE RIGHT OF WAY AND ACCESS DATA,
CONTACT RIGHT OF WAY ENGINEERING AT THE DISTRICT OFFICE.

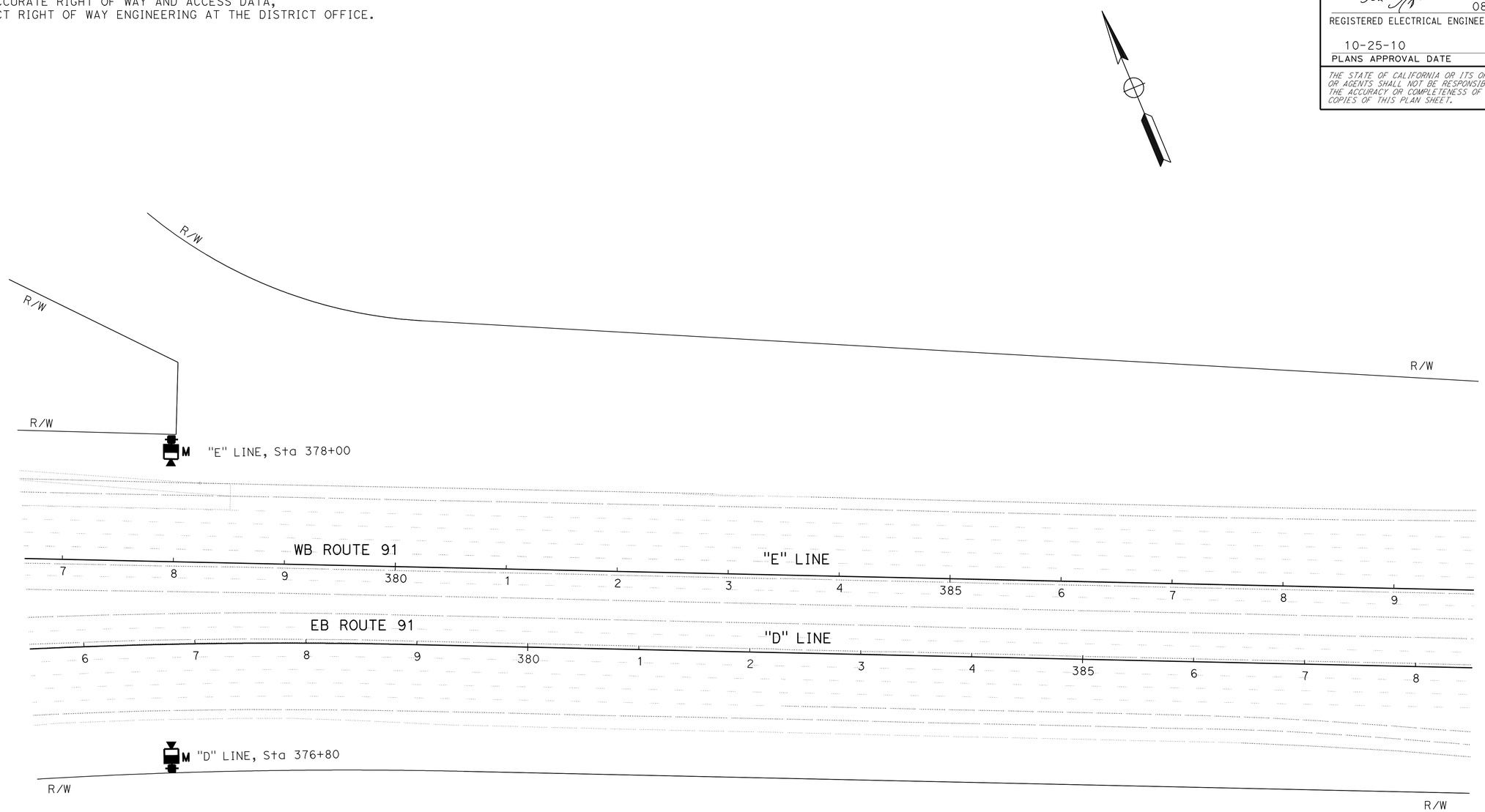

MICROWAVE VEHICLE DETECTION SYSTEM (TEMPORARY)

SCALE: 1" = 50'

THIS PLAN IS ACCURATE FOR ELECTRICAL WORK ONLY.

E-42

REVISED BY	DATE REVISED

FEDRICO HORMOZI — CALCULATED-DESIGNED BY
SHAHRAM SHAHRIARI — CHECKED BY

FUNCTIONAL SUPERVISOR: SHAHRAM SHAHRIARI

STATE OF CALIFORNIA - DEPARTMENT OF TRANSPORTATION
Caltrans®
ELECTRICAL DESIGN

LAST REVISION 05-25-10
DATE PLOTTED => 16-DEC-2010
TIME PLOTTED => 17:12

Dist	COUNTY	ROUTE	POST MILES TOTAL PROJECT	SHEET No.	TOTAL SHEETS
12	Ora	91	9.1/15.1	618	949

08-12-10
REGISTERED ELECTRICAL ENGINEER DATE

10-25-10
PLANS APPROVAL DATE

REGISTERED PROFESSIONAL ENGINEER F. HORMOZI No. E14460 Exp 6/30/12 ELECTRICAL STATE OF CALIFORNIA

THE STATE OF CALIFORNIA OR ITS OFFICERS OR AGENTS SHALL NOT BE RESPONSIBLE FOR THE ACCURACY OR COMPLETENESS OF SCANNED COPIES OF THIS PLAN SHEET.

NOTES: (THIS SHEET ONLY)

1. 45' WOOD POLE (MINIMUM).
2. MVDS SENSOR:
   SIZE: 10" (W) X 10" (H) X 6" (D)
   WEIGHT: 5 lbs
3. PHOTOVOLTAIC PANEL WITH GALVANIZED STEEL MOUNTING BRACKET ORIENTED WITH PANEL FACING DIRECTLY SOUTH.
4. 24" (W) X 24" (H) X 8" (D) NEMA 3R ENCLOSURE WITH PIANO HINGED DOOR, PADLOCK HASP AND INTERIOR PANEL FOR PHOTOVOLTAIC CHARGE CONTROLLER, BATTERIES, MVDS MODULE AND ADDITIONAL EQUIPMENT.

OFFSET FROM NEAREST EDGE OF FIRST DETECTION LANE	RECOMMENDED MOUNTING HEIGHT
6' - 11'	16'
12' - 13'	17'
14'	18'
15' - 16'	20'
17'	21'
18' - 19'	22'
20' - 22'	23'
23' - 24'	25'
25' - 26'	26'
27' - 29'	27'
30' - 32'	29'
33' - 37'	30'
38' - 39'	31'
40'	33'

TABLE 1
MVDS SENSOR MOUNTING HEIGHT

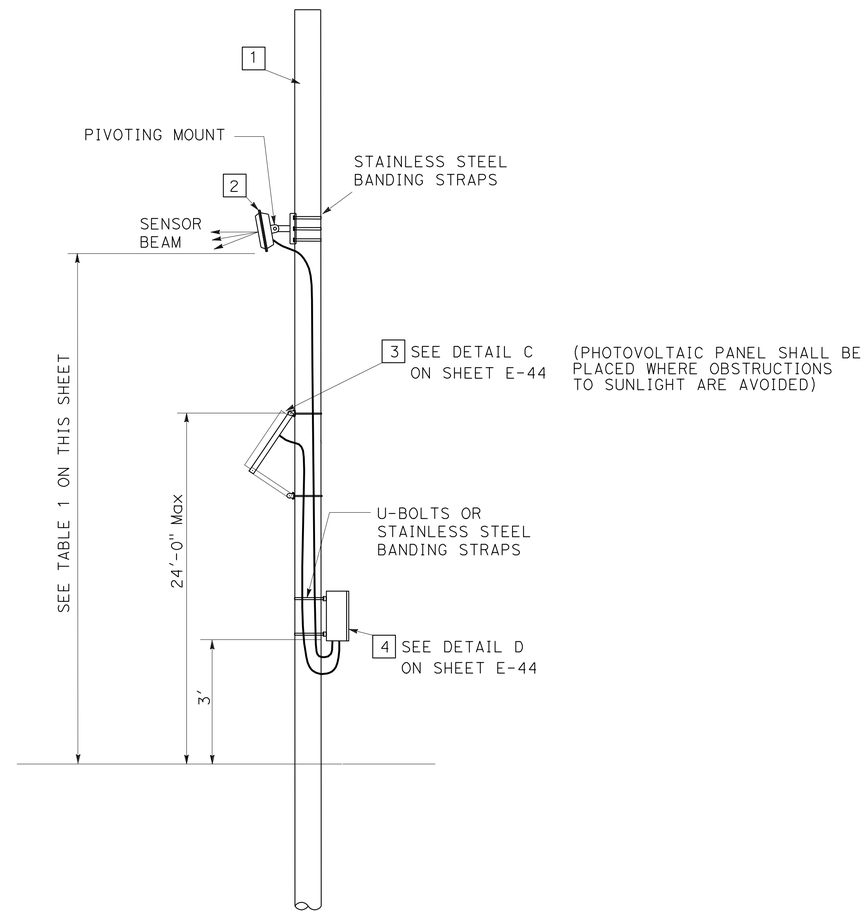

DETAIL A
WOOD POLE WITH MVDS AND PHOTOVOLTAIC PANEL

THIS PLAN IS ACCURATE FOR ELECTRICAL WORK ONLY.

MICROWAVE VEHICLE DETECTION SYSTEM (TEMPORARY)
(DETAILS)
NO SCALE

E-43

STATE OF CALIFORNIA - DEPARTMENT OF TRANSPORTATION
Caltrans® ELECTRICAL DESIGN

FUNCTIONAL SUPERVISOR: SHAHRAM SHAHRIARI
CALCULATED-DESIGNED BY: FEDRICO HORMOZI
CHECKED BY: SHAHRAM SHAHRIARI
REVISED BY
DATE REVISED

LAST REVISION 05-28-10
DATE PLOTTED => 16-DEC-2010
TIME PLOTTED => 17:12

Dist	COUNTY	ROUTE	POST MILES TOTAL PROJECT	SHEET No.	TOTAL SHEETS
12	Ora	91	9.1/15.1	619	949

REGISTERED ELECTRICAL ENGINEER 08-12-10 DATE

PLANS APPROVAL DATE 10-25-10

REGISTERED PROFESSIONAL ENGINEER F. HORMOZI No. E14460 Exp. 6/30/12 ELECTRICAL STATE OF CALIFORNIA

THE STATE OF CALIFORNIA OR ITS OFFICERS OR AGENTS SHALL NOT BE RESPONSIBLE FOR THE ACCURACY OR COMPLETENESS OF SCANNED COPIES OF THIS PLAN SHEET.

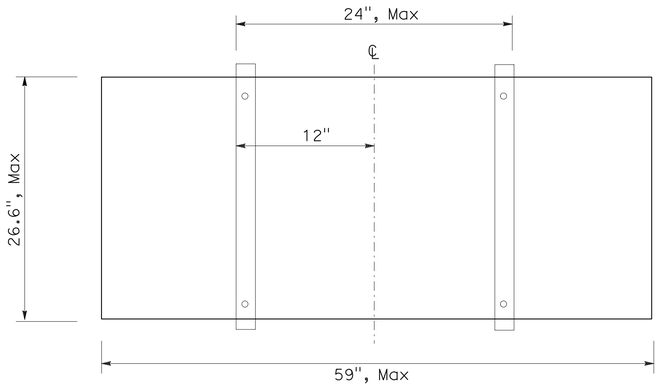

PV SOLAR PANEL MOUNTING DETAIL

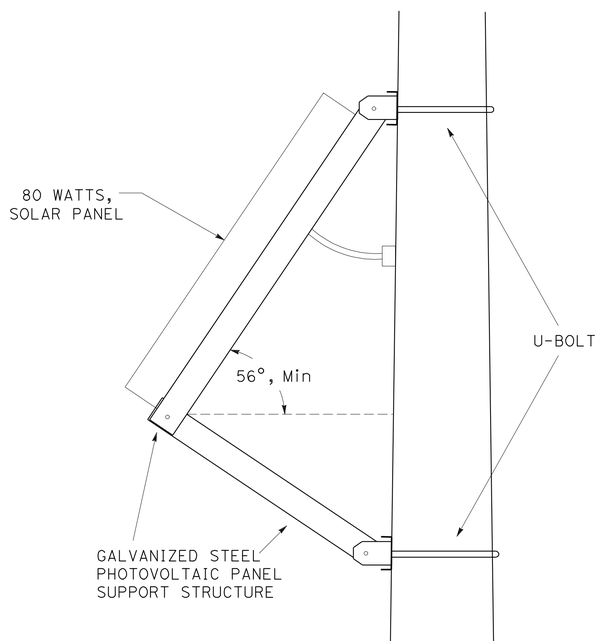

DETAIL C

PHOTOVOLTAIC PANEL AND MOUNTING DETAIL

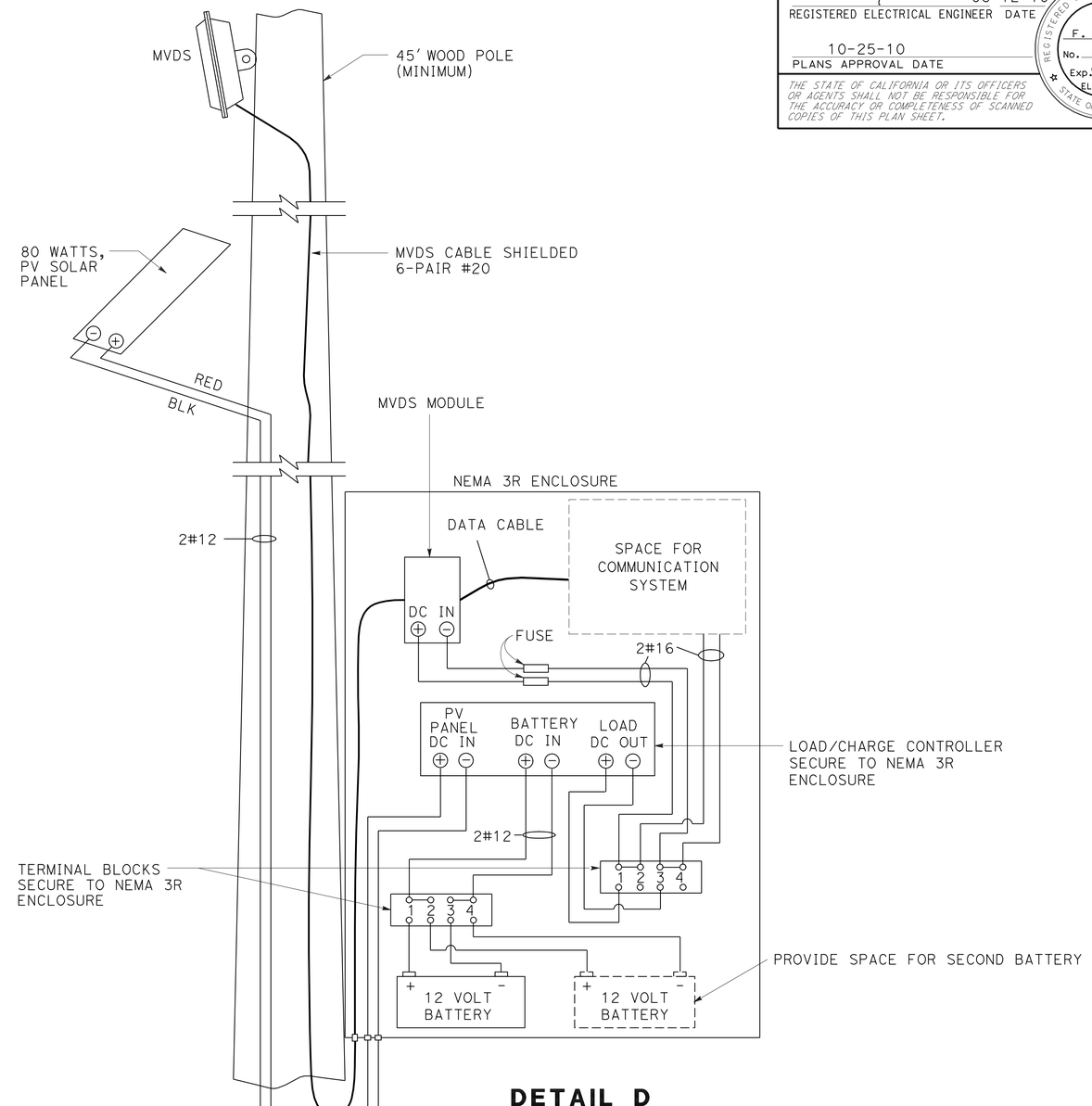

DETAIL D

STANDARD WITH MVDS AND PV POWER

MICROWAVE VEHICLE DETECTION SYSTEM (TEMPORARY)

(DETAILS)

NO SCALE

E-44

THIS PLAN IS ACCURATE FOR ELECTRICAL WORK ONLY.

STATE OF CALIFORNIA - DEPARTMENT OF TRANSPORTATION

Caltrans® ELECTRICAL DESIGN

FUNCTIONAL SUPERVISOR: SHAHRAM SHAHRIARI

CALCULATED-DESIGNED BY: FEDRICO HORMOZI

CHECKED BY: SHAHRAM SHAHRIARI

REVISED BY

DATE REVISED

LAST REVISION DATE PLOTTED => 16-DEC-2010 TIME PLOTTED => 17:12

05-28-10

FOR ACCURATE RIGHT OF WAY AND ACCESS DATA, CONTACT RIGHT OF WAY ENGINEERING AT THE DISTRICT OFFICE.

NOTE: (FOR SHEETS E-45 TO E-47)

1. ALL EXISTING CONDUITS ARE 1½"C, 2#8 UNLESS OTHERWISE NOTED.

LEGEND: (FOR SHEET E-45 TO E-46)

- NEW 40' WOOD POLE
- NEW 40' WOOD POLE WITH 20' LUMINAIRE MAST ARM AND 310 W HPS LAMP

Dist	COUNTY	ROUTE	POST MILES TOTAL PROJECT	SHEET No.	TOTAL SHEETS
12	Ora	91	9.1/15.1	620	949

Vanessa Van Truong 08-12-10
REGISTERED ELECTRICAL ENGINEER DATE

10-25-10
PLANS APPROVAL DATE

REGISTERED PROFESSIONAL ENGINEER V.V. TRUONG No. E 13983 Exp. 6/30/12 ELECTRICAL STATE OF CALIFORNIA

THE STATE OF CALIFORNIA OR ITS OFFICERS OR AGENTS SHALL NOT BE RESPONSIBLE FOR THE ACCURACY OR COMPLETENESS OF SCANNED COPIES OF THIS PLAN SHEET.

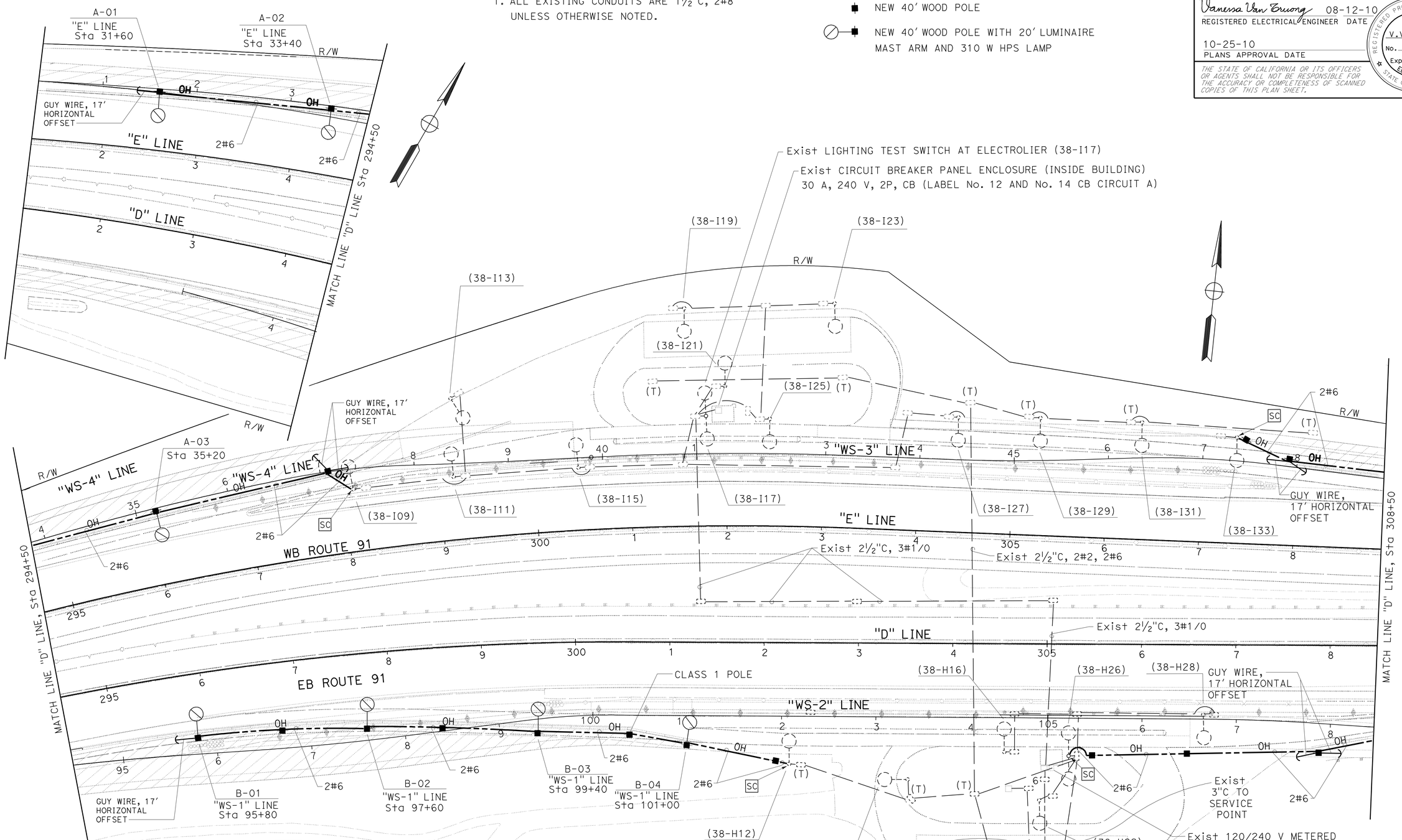

STAGE 3A

THIS PLAN IS ACCURATE FOR ELECTRICAL WORK ONLY.

LIGHTING (TEMPORARY)

SCALE: 1" = 50'

E-45

STATE OF CALIFORNIA - DEPARTMENT OF TRANSPORTATION
Caltrans®
ELECTRICAL DESIGN

FUNCTIONAL SUPERVISOR: SHAHRAM SHAHRIARI
CALCULATED-DESIGNED BY: VANESSA TRUONG
CHECKED BY: ANTHONY FERNANDEZ
REVISED BY
DATE REVISED

LAST REVISION 07-30-10
DATE PLOTTED => 17-DEC-2010
TIME PLOTTED => 09:53

Dist	COUNTY	ROUTE	POST MILES TOTAL PROJECT	SHEET No.	TOTAL SHEETS
12	Ora	91	9.1/15.1	621	949

Vanessa Van Truong 08-12-10
REGISTERED ELECTRICAL ENGINEER DATE

10-25-10
PLANS APPROVAL DATE

REGISTERED PROFESSIONAL ENGINEER V.V. TRUONG No. E 13983 Exp. 6/30/12 ELECTRICAL STATE OF CALIFORNIA

THE STATE OF CALIFORNIA OR ITS OFFICERS OR AGENTS SHALL NOT BE RESPONSIBLE FOR THE ACCURACY OR COMPLETENESS OF SCANNED COPIES OF THIS PLAN SHEET.

FOR ACCURATE RIGHT OF WAY AND ACCESS DATA, CONTACT RIGHT OF WAY ENGINEERING AT THE DISTRICT OFFICE.

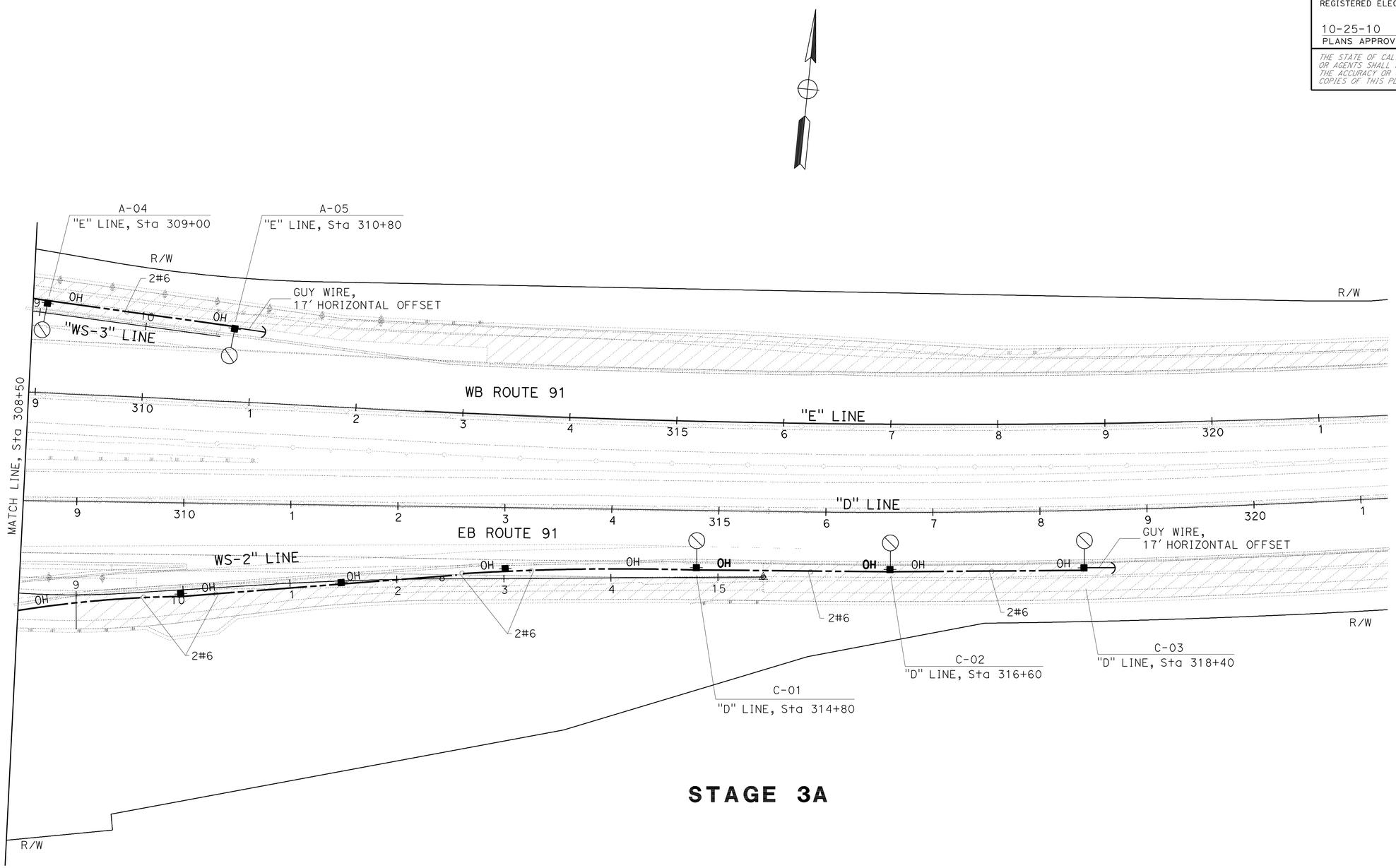

STAGE 3A

LIGHTING (TEMPORARY)

SCALE: 1" = 50'

FOR LEGEND SEE SHEET E-45

THIS PLAN IS ACCURATE FOR ELECTRICAL WORK ONLY.

E-46

STATE OF CALIFORNIA - DEPARTMENT OF TRANSPORTATION
Caltrans
ELECTRICAL DESIGN

FUNCTIONAL SUPERVISOR: SHAHRAM SHAHRIARI
CALCULATED-DESIGNED BY: VANESSA TRUONG
CHECKED BY: ANTHONY FERNANDEZ
REVISED BY
DATE REVISED

LAST REVISION 11-10-10
DATE PLOTTED => 17-DEC-2010
TIME PLOTTED => 09:54

Dist	COUNTY	ROUTE	POST MILES TOTAL PROJECT	SHEET No.	TOTAL SHEETS
12	Ora	91	9.1/15.1	622	949

REGISTERED CIVIL ENGINEER DATE

11-8-10
PLANS APPROVAL DATE

REGISTERED PROFESSIONAL ENGINEER JEFFREY B. WOODY No. C41260 Exp. 3/31/11 CIVIL STATE OF CALIFORNIA

THE STATE OF CALIFORNIA OR ITS OFFICERS OR AGENTS SHALL NOT BE RESPONSIBLE FOR THE ACCURACY OR COMPLETENESS OF SCANNED COPIES OF THIS PLAN SHEET.

NOTES: (THIS SHEET ONLY)

1. MAXIMUM DISTANCE BETWEEN TEMPORARY WOODEN POLES SHALL BE 150 FEET.
2. MAXIMUM SAG DISTANCE SHALL BE 5 PERCENT OF SPAN.
3. FOR TYPICAL LUMINAIRE MOUNTING DETAIL ON A WOOD POLE, SEE SHEET SES-12.

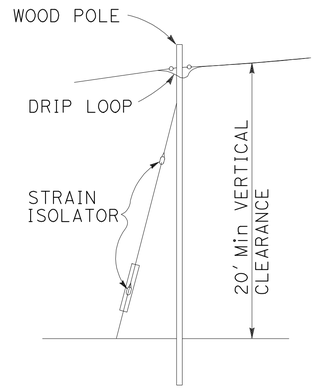

OVERHEAD INSTALLATION DETAIL ON TEMPORARY WOODEN POLE

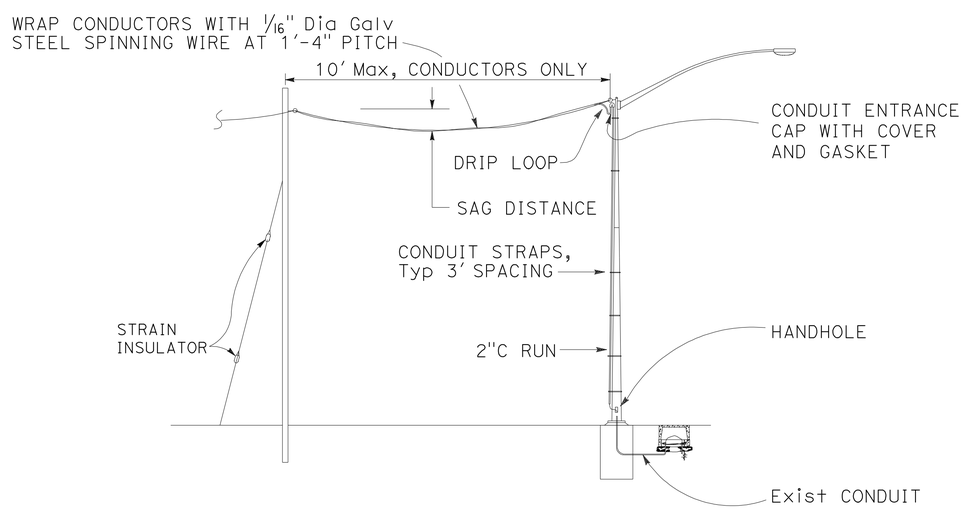

OVERHEAD INSTALLATION DETAIL TO EXISTING STANDARD

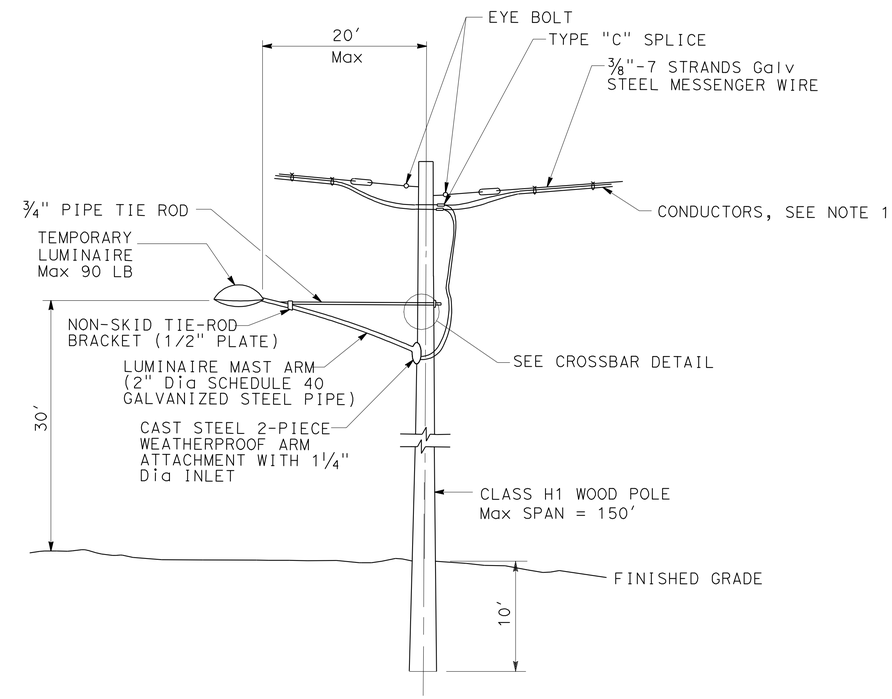

TEMPORARY LUMINAIRE ON A WOODEN POLE

NOTE:

1. Maximum distance between temporary pole shall be 150' with 150 Lbs total weight of power conductors per pole in a straight line.

LIGHTING (TEMPORARY) (DETAILS)

NO SCALE

E-47

STATE OF CALIFORNIA - DEPARTMENT OF TRANSPORTATION
Caltrans® ELECTRICAL DESIGN

FUNCTIONAL SUPERVISOR: S. SHAHRIARI
CALCULATED-DESIGNED BY: JEFFREY WOODY
CHECKED BY: ANTHONY FERANRDEZ
REVISED BY
DATE REVISED

LAST REVISION 10-04-10 DATE PLOTTED => 17-DEC-2010 TIME PLOTTED => 12:57

Dist	COUNTY	ROUTE	POST MILES TOTAL PROJECT	SHEET No.	TOTAL SHEETS
12	Ora	91	9.1/15.1	623	949

REGISTERED ELECTRICAL ENGINEER 08-12-10 DATE

PLANS APPROVAL DATE 10-25-10

REGISTERED PROFESSIONAL ENGINEER JOANNE VO No. E 16748 Exp. 9/30/10 ELECTRICAL STATE OF CALIFORNIA

THE STATE OF CALIFORNIA OR ITS OFFICERS OR AGENTS SHALL NOT BE RESPONSIBLE FOR THE ACCURACY OR COMPLETENESS OF ELECTRONIC COPIES OF THIS PLAN SHEET.

NOTES: (THIS SHEET)

1. DIMENSIONS VARY ACCORDING TO SIZE OF CONDUIT ETC. BUT THE MINIMUM BEND RADIUS OF 4'-0" SHALL BE MAINTAINED ON ALL TRUNK CONDUITS CONTAINING FIBER OPTIC CABLE AND SIX TIMES THE CONDUIT DIAMETER FOR ALL OTHER CONDUITS.
2. ALL BENDS SHALL BE FACTORY BENDS.
3. CONTRACTOR SHALL ADAPT CONDUIT STUBOUTS FOR SPECIFIC PROJECT REQUIREMENTS.
4. ADDITIONAL CONDUIT ENTRANCES AS REQUIRED.
5. TOP CONDUIT TO BE SPARE.

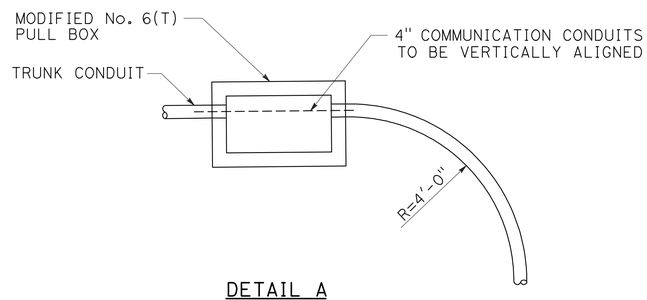

DETAIL A

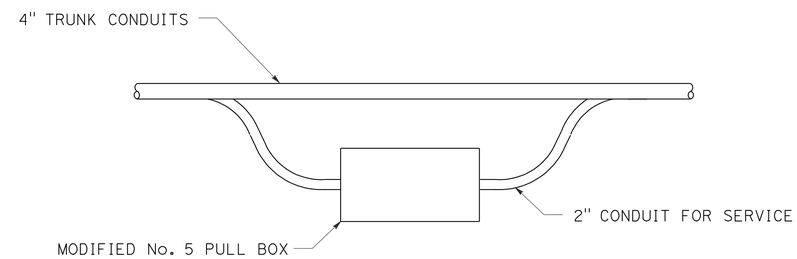

TOP VIEW

ROUTE SERVICE CONDUIT UP FROM BENEATH CONDUITS INTO No. 5 PULL BOX LOCATED ALONGSIDE TRUNK. TRUNK CONDUITS REMAIN IN TRENCH.

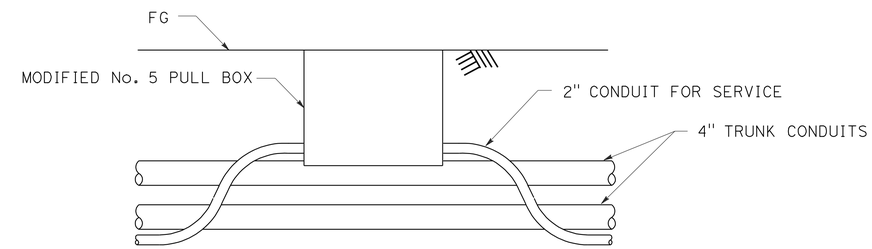

SIDE VIEW

DETAIL B

COMMUNICATION SYSTEM
(MODIFIED 5 (T) AND 6 (T) COMMUNICATION PULL BOX DETAILS)

NO SCALE

E-48

THIS PLAN IS ACCURATE FOR ELECTRICAL WORK ONLY.

STATE OF CALIFORNIA - DEPARTMENT OF TRANSPORTATION
Caltrans ELECTRICAL DESIGN

FUNCTIONAL SUPERVISOR: SHAHRAM SHAHRIARI
CALCULATED-DESIGNED BY: JOANNE VO
CHECKED BY
REVISED BY
DATE REVISED

LAST REVISION 06-10-10
DATE PLOTTED => 17-DEC-2010
TIME PLOTTED => 09:54

Dist	COUNTY	ROUTE	POST MILES TOTAL PROJECT	SHEET No.	TOTAL SHEETS
12	Ora	91	9.1/15.1	624	949

08-12-10
REGISTERED ELECTRICAL ENGINEER DATE

10-25-10
PLANS APPROVAL DATE

REGISTERED PROFESSIONAL ENGINEER JOANNE VO No. E 16748 Exp. 9/30/10 ELECTRICAL STATE OF CALIFORNIA

THE STATE OF CALIFORNIA OR ITS OFFICERS OR AGENTS SHALL NOT BE RESPONSIBLE FOR THE ACCURACY OR COMPLETENESS OF ELECTRONIC COPIES OF THIS PLAN SHEET.

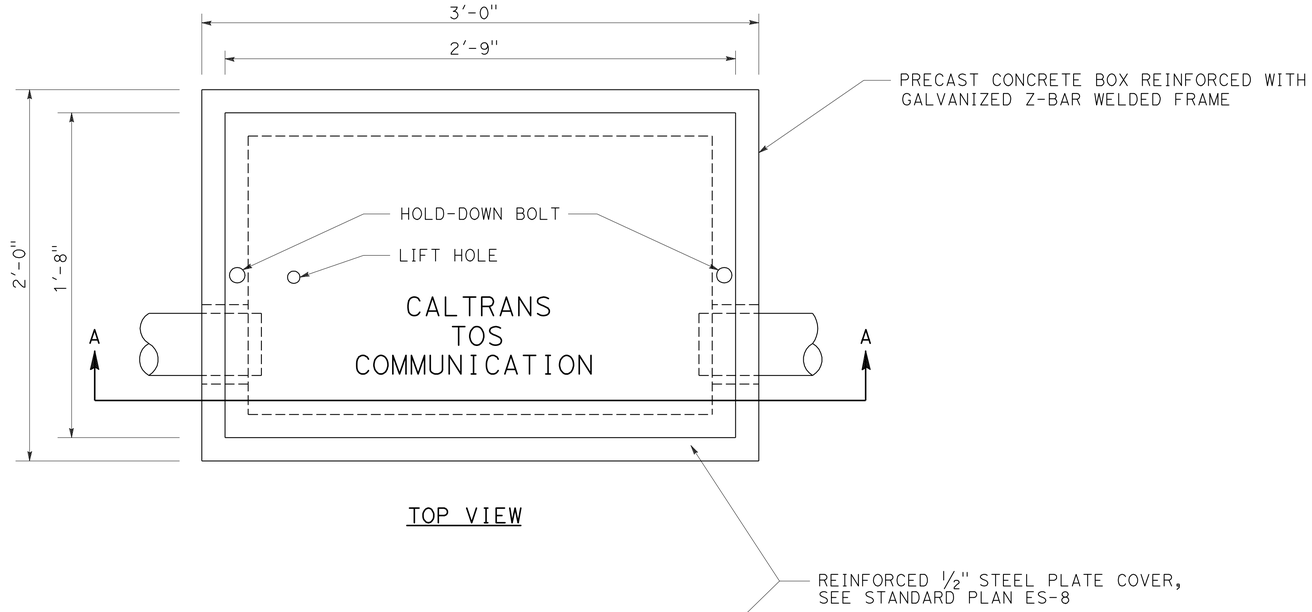

TOP VIEW

NOTES: (THIS SHEET)

1. ADDITIONAL CONDUIT ENTRANCES AS SHOWN IN THE PLANS.
2. SEE SPECIAL PROVISIONS REGARDING HOLD DOWN BOLTS FOR TRAFFIC COVERS.
3. WHERE FURNISHED, TOP CONDUIT SHALL BE A SPARE.
4. 4'-0" x 5'-0" CONCRETE PAD WITH PULL BOX IN CENTER SHALL BE INSTALLED FLUSH WITH PULL BOX COVER.

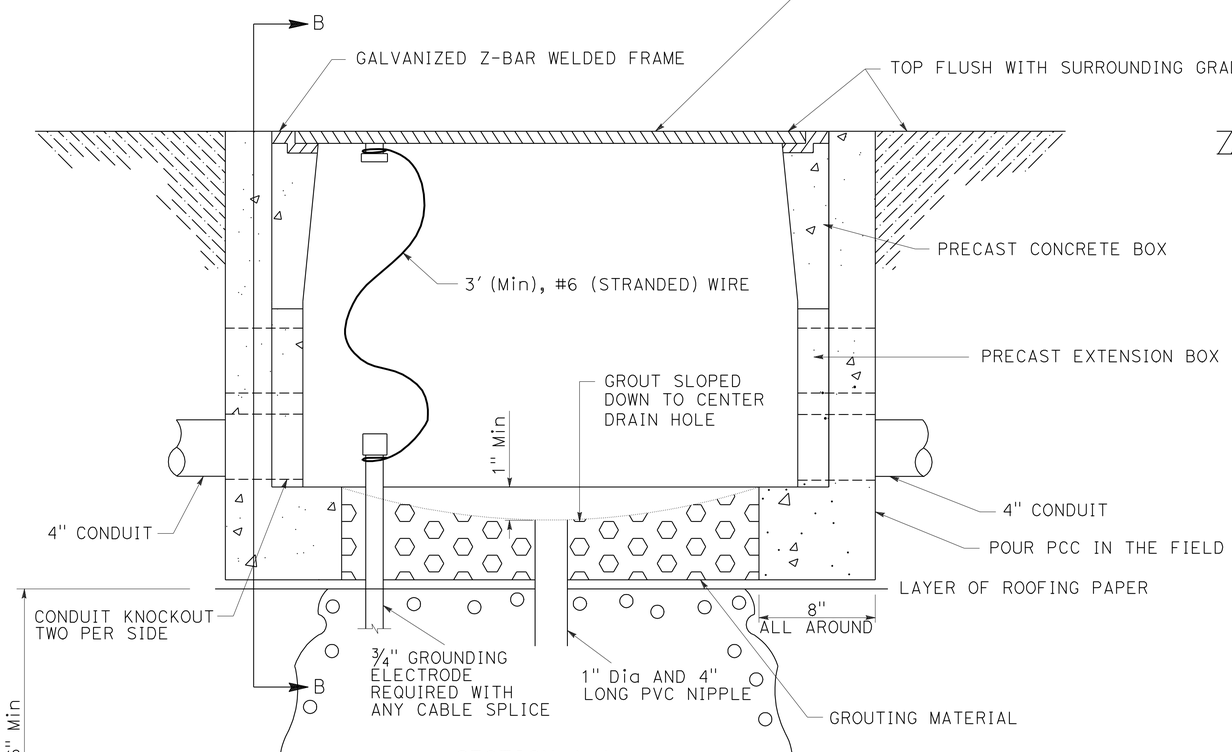

SECTION A-A

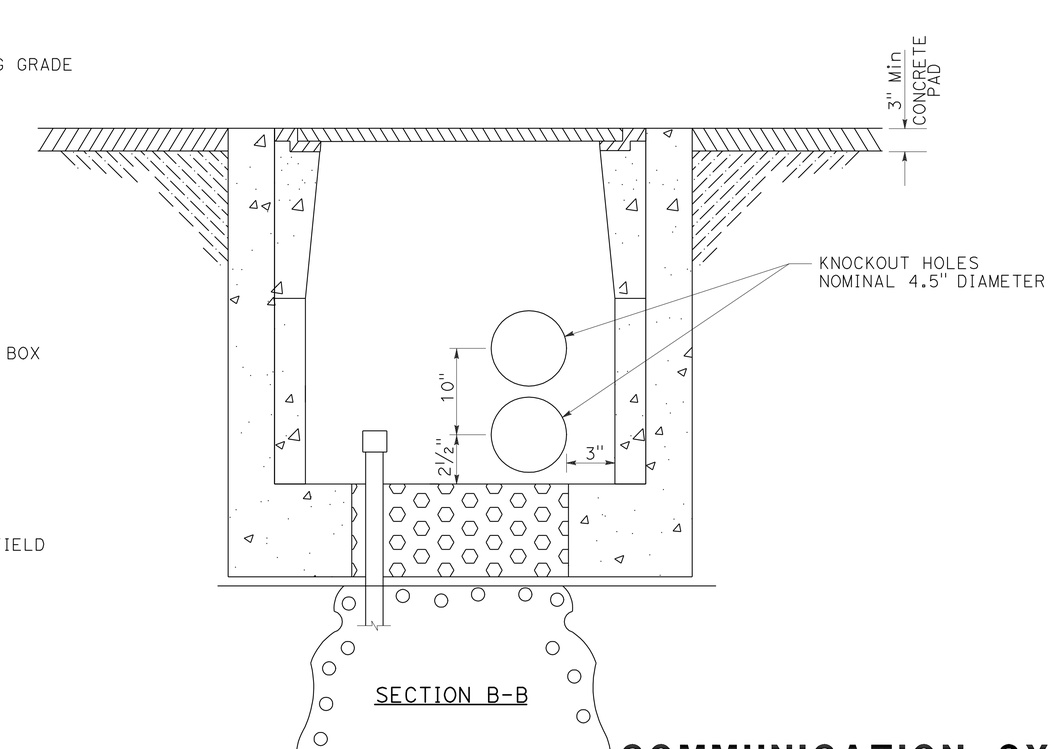

SECTION B-B

COMMUNICATION SYSTEM (MODIFIED 5(T) AND 6(T) COMMUNICATION PULL BOX DETAILS)

NO SCALE

E-49

FOR GENERAL NOTES AND LEGEND, SEE SHEET E-1 AND E-2.
THIS PLAN IS ACCURATE FOR ELECTRICAL WORK ONLY.

STATE OF CALIFORNIA - DEPARTMENT OF TRANSPORTATION
Caltrans® ELECTRICAL DESIGN

FUNCTIONAL SUPERVISOR | CALCULATED-DESIGNED BY JOANNE VO | CHECKED BY SHAHRAM SHAHRIARI | REVISED BY | DATE REVISED

LAST REVISION 06-10-10 | DATE PLOTTED => 16-DEC-2010 | TIME PLOTTED => 17:13

Dist	COUNTY	ROUTE	POST MILES TOTAL PROJECT	SHEET No.	TOTAL SHEETS
12	Ora	91	9.1/15.6	625	949

REGISTERED ELECTRICAL ENGINEER 08-12-10 DATE

PLANS APPROVAL DATE 10-25-10

REGISTERED PROFESSIONAL ENGINEER JOANNE VO No. E 16748 Exp. 9/30/10 ELECTRICAL STATE OF CALIFORNIA

THE STATE OF CALIFORNIA OR ITS OFFICERS OR AGENTS SHALL NOT BE RESPONSIBLE FOR THE ACCURACY OR COMPLETENESS OF SCANNED COPIES OF THIS PLAN SHEET.

NOTES: (THIS SHEET ONLY)

1. FOR GENERAL NOTES, LEGEND, AND ABBREVIATIONS, SEE SHEET E-1 AND E-2.

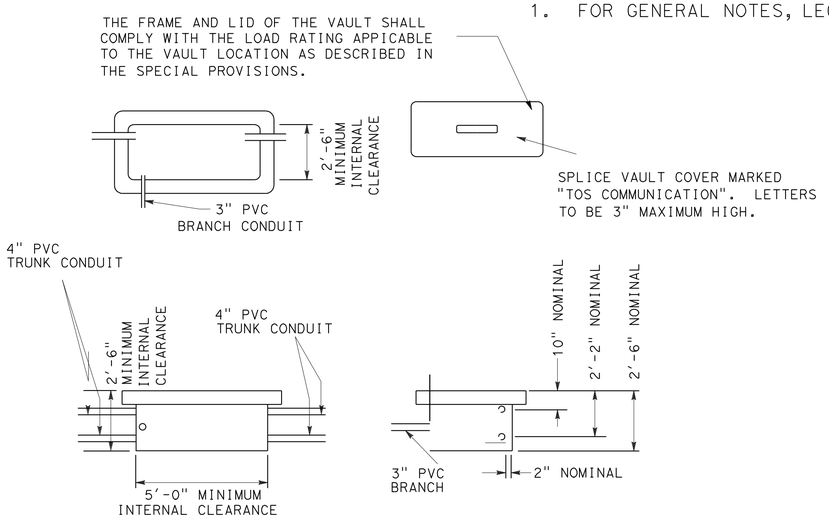

SPLICE VAULT

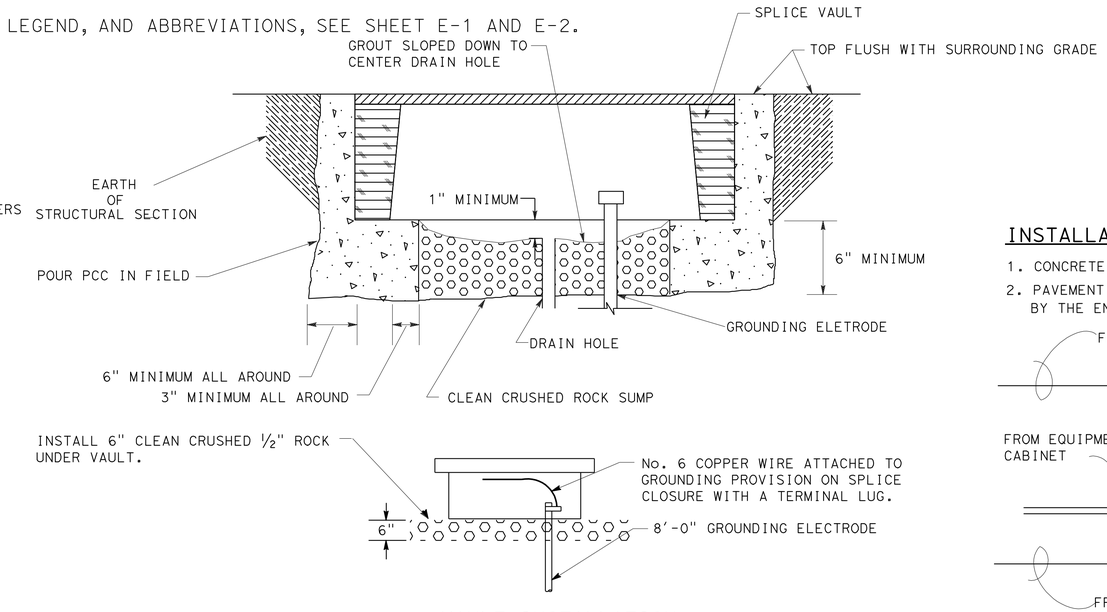

VAULT INSTALLATION

INSTALLATION NOTES: (THIS SHEET)

1. CONCRETE RING SHALL BE MINOR CONCRETE.
2. PAVEMENT AND SUBGRADE WILL BE AS DIRECTED BY THE ENGINEER.

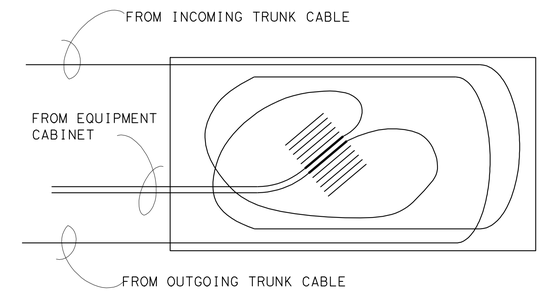

TYPICAL FIBER SPLICE TRAY

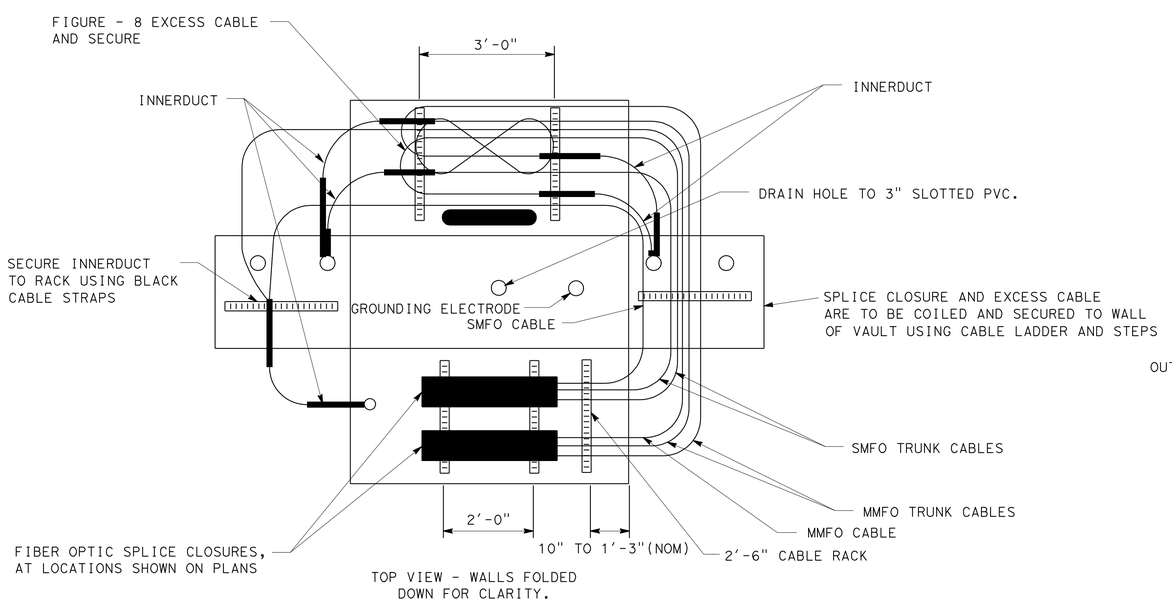

CABLE INSTALLATION

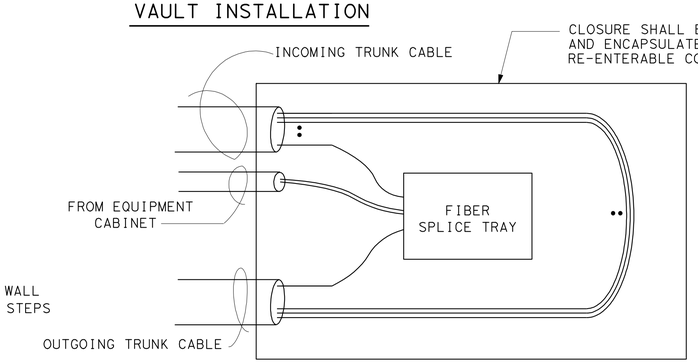

TYPICAL FIBER SPLICE CLOSURE

SPLICE PROCEDURE

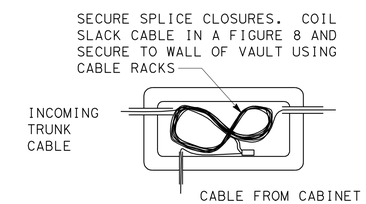

STEP 4

NOTES: (THIS SHEET)

1. UPON ACCEPTANCE OF THE WORK ALL CONDUITS SHALL BE SEALED WITH COMPATIBLE SEALANT MATERIAL.
2. ALL GROUND CONNECTIONS SHALL BE COATED WITH OXIDATION PROHIBITING COMPOUND.
3. ALL CABLE STRAPS SHALL BE DESIGNED TO WITHSTAND ULTRA-VIOLET EXPOSURE.
4. THE VAULT SHALL BE CAULKED AFTER ALL KNOWN ENTRANCES HAVE BEEN MADE.
5. INSTALL ALL CABLES IN LOWER 4" CONDUIT.
6. UPPER 4" CONDUIT IS SPARE ONLY.
7. NOT TO SCALE.
8. VAULT SHALL HAVE INTEGRAL BASE OR SHALL BE GROUTED PER STANDARD SPECIFICATION OF PULL BOXES.
9. NUMBER OF SPLICE CLOSURES MAY VARY.

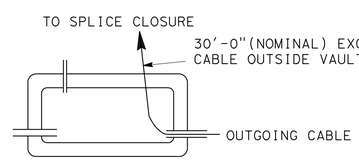

STEP 1

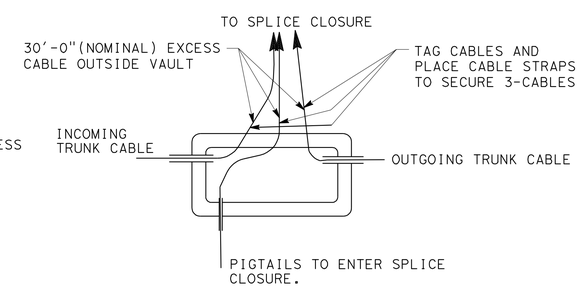

STEP 2

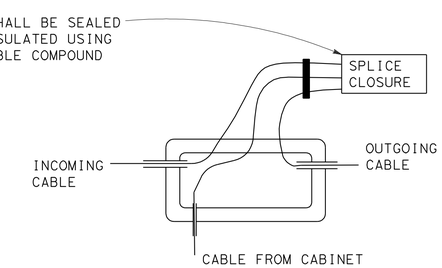

STEP 3

SPLICE PROCEDURE

COMMUNICATION SYSTEM
(SPLICE VAULT DETAILS)
NO SCALE

THIS PLAN IS ACCURATE FOR ELECTRICAL WORK ONLY.

E-50

STATE OF CALIFORNIA - DEPARTMENT OF TRANSPORTATION
Caltrans® ELECTRICAL DESIGN

FUNCTIONAL SUPERVISOR: SHAHRAM SHAHRIARI
CALCULATED-DESIGNED BY: JOANNE VO
CHECKED BY: SHAHRAM SHAHRIARI
REVISED BY / DATE REVISED

LAST REVISION 07-01-10 | DATE PLOTTED => 16-DEC-2010 | TIME PLOTTED => 17:13

Dist	COUNTY	ROUTE	POST MILES TOTAL PROJECT	SHEET No.	TOTAL SHEETS
12	Ora	91	9.1/15.6	626	949

REGISTERED ELECTRICAL ENGINEER — DATE 08-12-10

PLANS APPROVAL DATE 10-25-10

REGISTERED PROFESSIONAL ENGINEER — JOANNE VO — No. E 16748 — Exp. 9/30/12 — ELECTRICAL — STATE OF CALIFORNIA

THE STATE OF CALIFORNIA OR ITS OFFICERS OR AGENTS SHALL NOT BE RESPONSIBLE FOR THE ACCURACY OR COMPLETENESS OF SCANNED COPIES OF THIS PLAN SHEET.

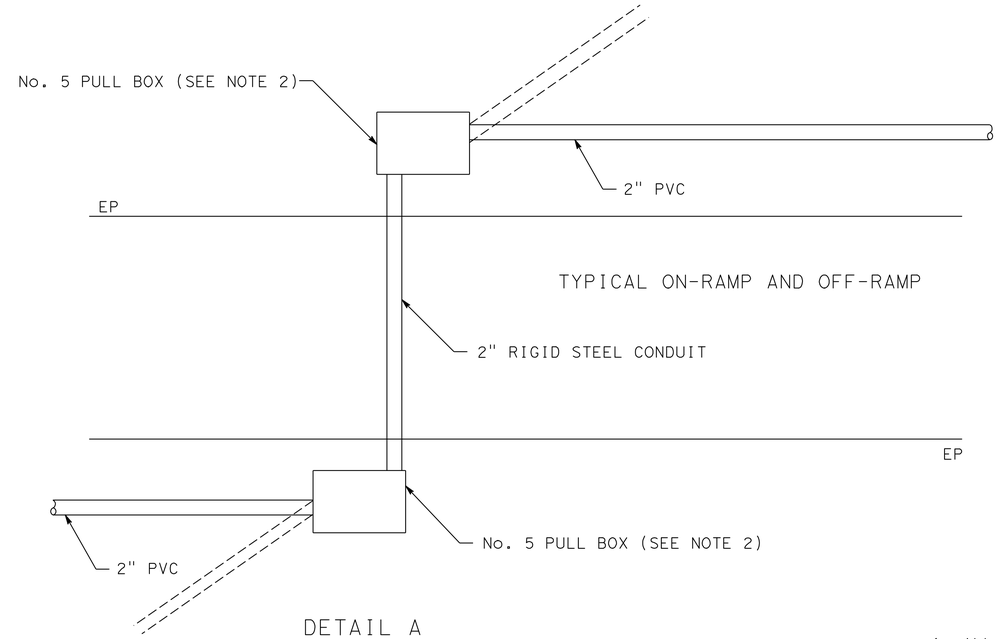

DETAIL A

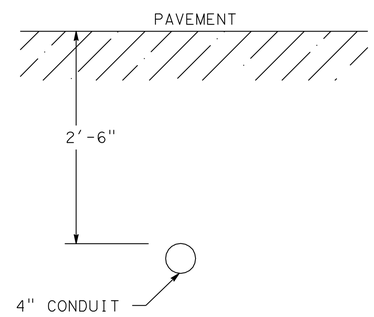

SECTION A-A

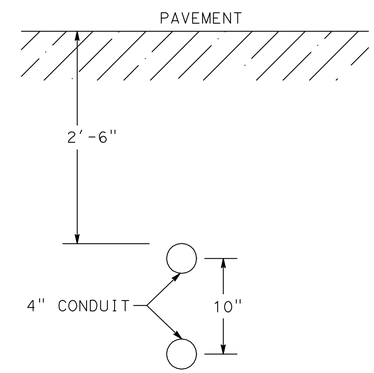

SECTION B-B

NOTES: (THIS SHEET)

1. ALL CONDUITS SHALL BE 2'-6" BELOW FINISHED GRADE.
2. PLACE PULL BOX AS SHOWN ON THE PLANS.
3. ALL BENDS SHALL BE FACTORY BENDS.
4. BEND ANGLES AND CONDUIT DIRECTION VARY AS SHOWN IN PLANS.

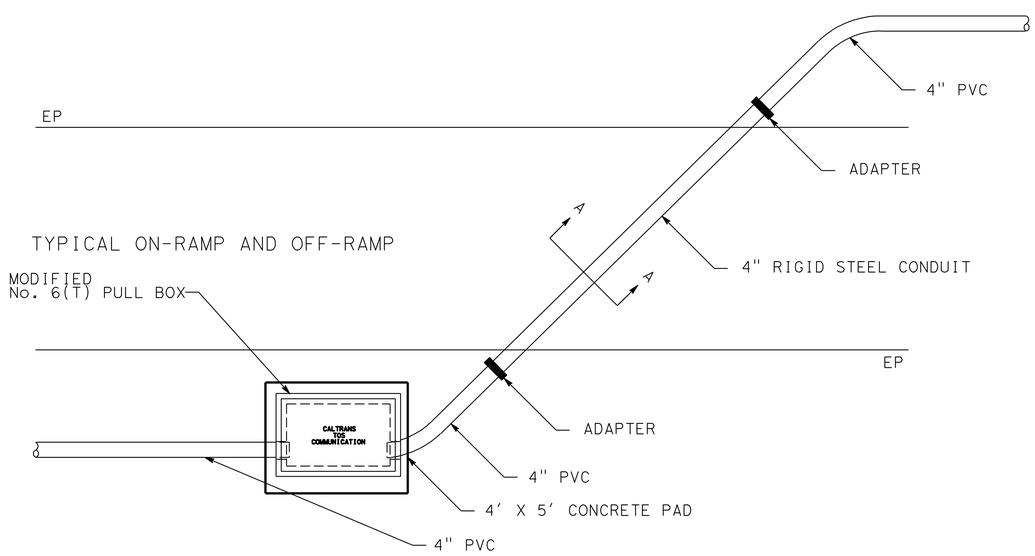

DETAIL B

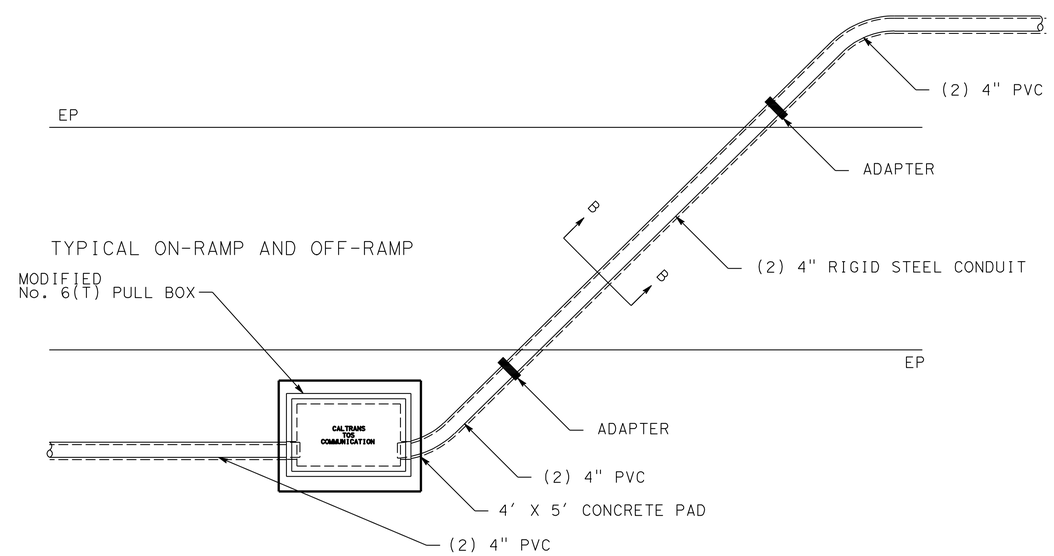

DETAIL C

COMMUNICATION SYSTEM
(CONDUIT JACKING DETAILS)

NO SCALE

FOR GENERAL NOTES, LEGEND, AND ABBREVIATION, SEE SHEET E-1 AND E-2.

THIS PLAN IS ACCURATE FOR ELECTRICAL WORK ONLY.

E-51

STATE OF CALIFORNIA - DEPARTMENT OF TRANSPORTATION
Caltrans® ELECTRICAL DESIGN

FUNCTIONAL SUPERVISOR: SHAHRAM SHAHRIARI

CALCULATED-DESIGNED BY: JOANNE VO
CHECKED BY: SHAHRAM SHAHRIARI

REVISED BY
DATE REVISED

Dist	COUNTY	ROUTE	POST MILES TOTAL PROJECT	SHEET No.	TOTAL SHEETS
12	Ora	91	9.1/15.6	627	949

REGISTERED ELECTRICAL ENGINEER 08-12-10 DATE

10-25-10
PLANS APPROVAL DATE

REGISTERED PROFESSIONAL ENGINEER JOANNE VO No. E 16748 Exp. 9/30/12 ELECTRICAL STATE OF CALIFORNIA

THE STATE OF CALIFORNIA OR ITS OFFICERS OR AGENTS SHALL NOT BE RESPONSIBLE FOR THE ACCURACY OR COMPLETENESS OF SCANNED COPIES OF THIS PLAN SHEET.

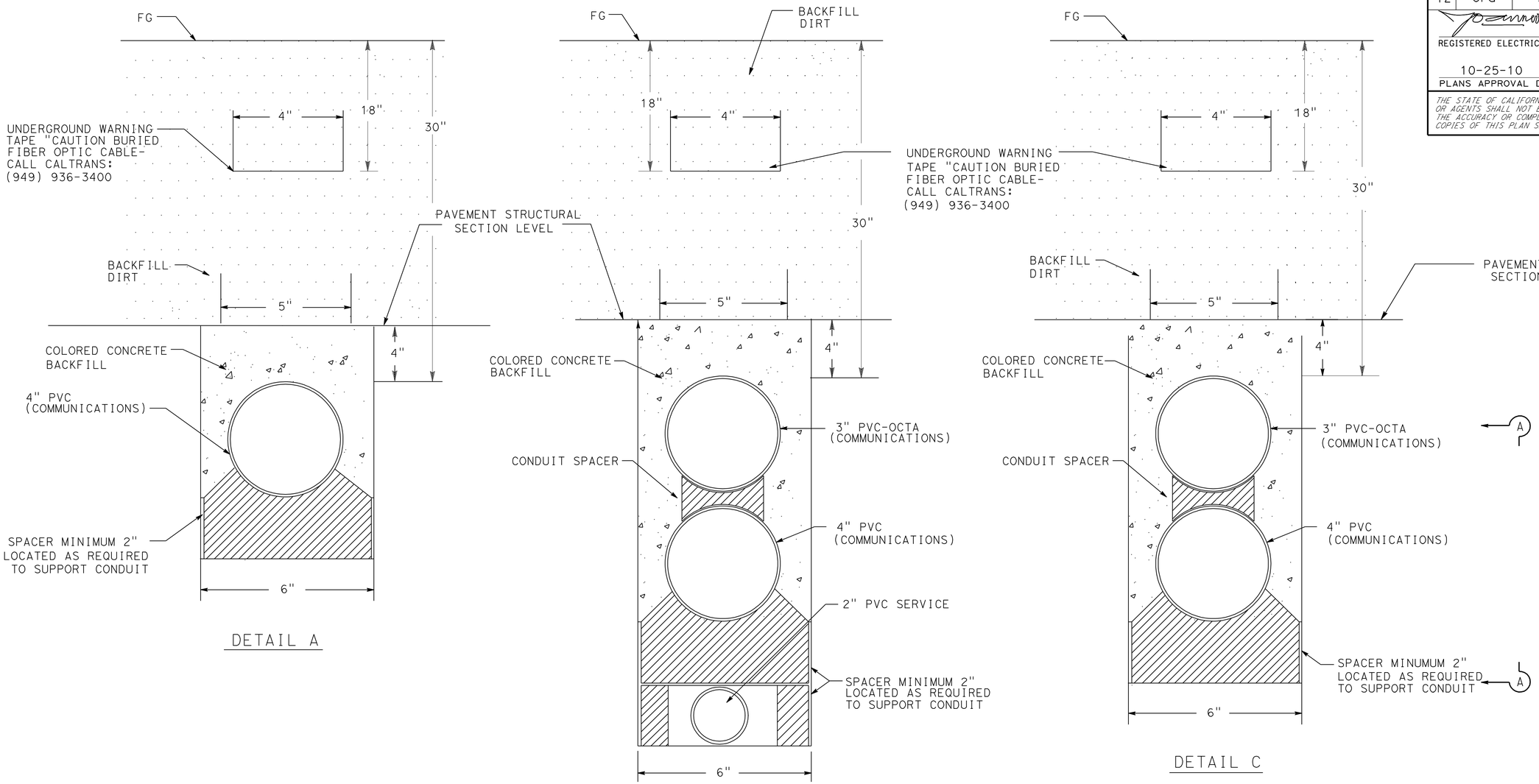

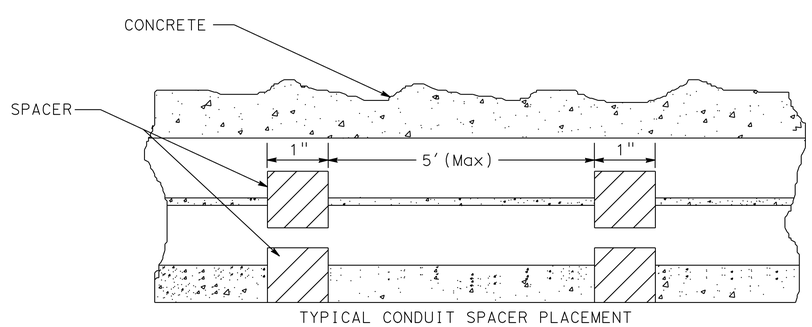

SECTION A-A

COMMUNICATION SYSTEM
(TRENCH IN DIRT DETAILS)

NO SCALE

E-52

FOR GENERAL NOTES AND LEGEND, SEE SHEET E-1 AND E-2.

THIS PLAN IS ACCURATE FOR ELECTRICAL WORK ONLY.

STATE OF CALIFORNIA - DEPARTMENT OF TRANSPORTATION
Caltrans ELECTRICAL DESIGN

FUNCTIONAL SUPERVISOR: SHAHRAM SHAHRIARI
CALCULATED-DESIGNED BY: JOANNE VO
CHECKED BY: SHAHRAM SHAHRIARI
REVISED BY
DATE REVISED

DIST	COUNTY	ROUTE	POST MILE TOTAL PROJECT	SHEET No	TOTAL SHEETS
12	Ora	91	9.1/15.1	628	949

08-12-10
REGISTERED ELECTRICAL ENGINEER

10-25-10
PLANS APPROVAL DATE

REGISTERED PROFESSIONAL ENGINEER JOANNE VO No. E 16748 Exp. 9/30/12 ELECTRICAL STATE OF CALIFORNIA

The State of California or its officers or agents shall not be responsible for the accuracy or completeness of electronic copies of this plan sheet.

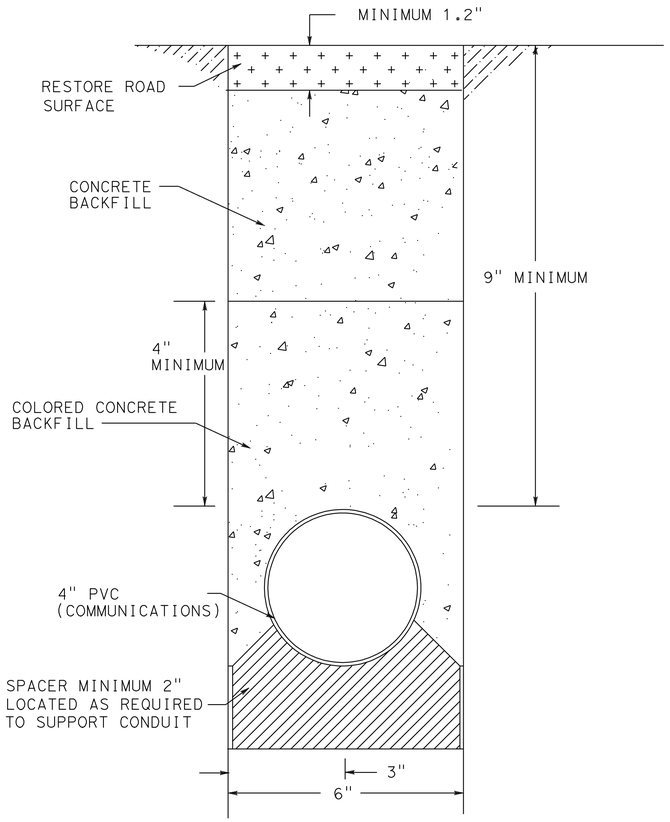

DETAIL A

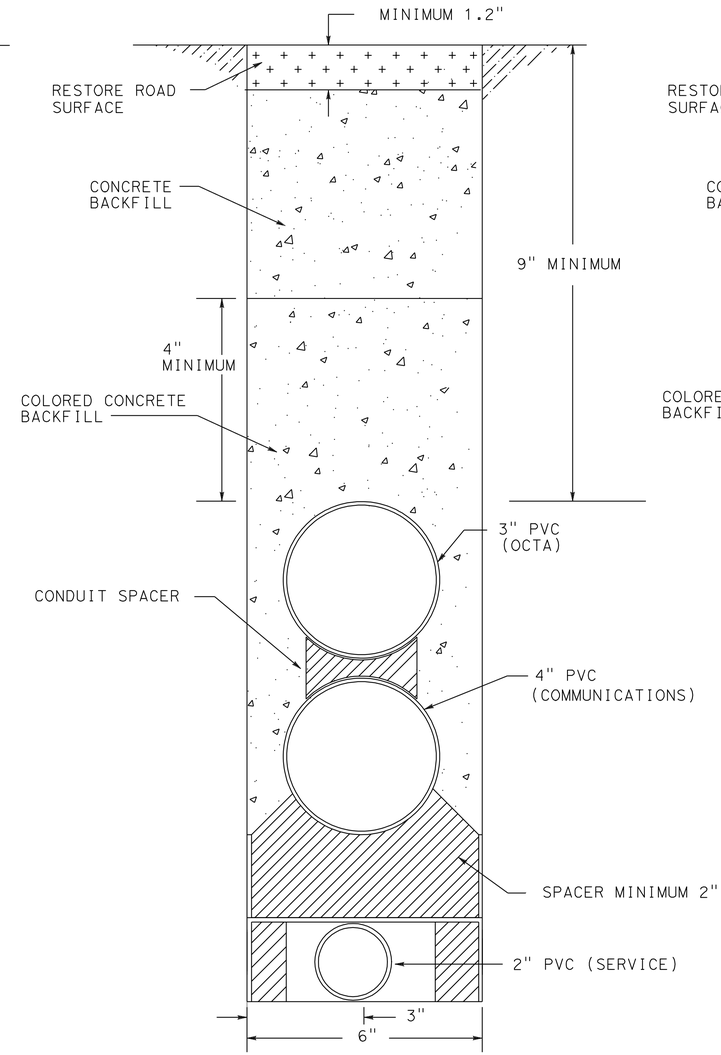

DETAIL B

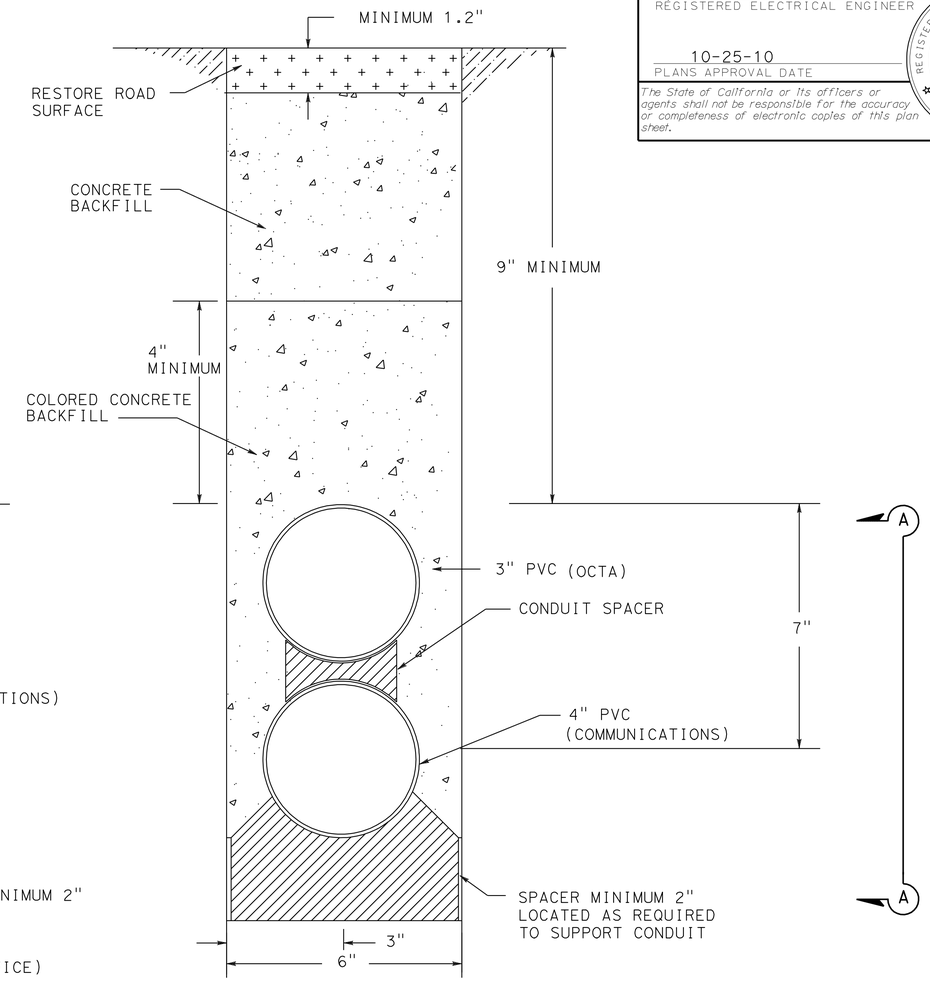

DETAIL C

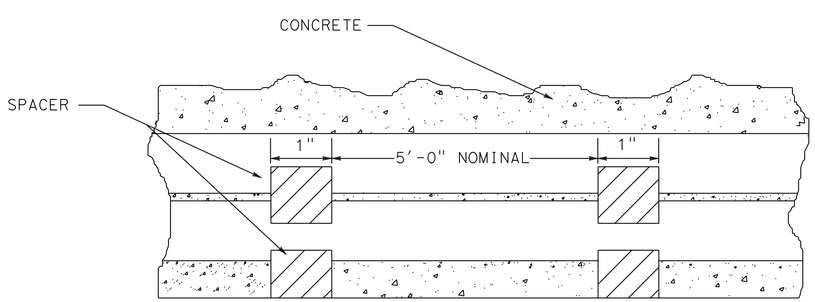

TYPICAL CONDUIT SPACER PLACEMENT

SECTION A-A

NOTE: WHEN TRENCH TRANSITIONS FROM PAVEMENT TO DIRT AREAS, CONDUIT SHALL MEET MINIMUM BEND RADIUS FOR FIBER OPTIC.

FOR GENERAL NOTES AND LEGEND, SEE SHEET E-1 AND E-2.
THIS PLAN IS ACCURATE FOR ELECTRICAL WORK ONLY.

COMMUNICATION SYSTEM
(TRENCH IN PAVEMENT DETAILS)

NO SCALE

E-53

REVISED BY	DATE REVISED
JOANNE VO	SHAHRAM SHAHRIARI

CALCULATED/DESIGNED BY	CHECKED BY
JOANNE VO	SHAHRAM SHAHRIARI

PROJECT ENGINEER

STATE OF CALIFORNIA - DEPARTMENT OF TRANSPORTATION
Caltrans
ELECTRICAL DESIGN

LAST REVISION 06-10-10
DATE PLOTTED => 16-DEC-2010
TIME PLOTTED => 17:13

RELATIVE BORDER SCALE IS IN INCHES 0 1 2 3
USERNAME => trphils
DGN FILE => c0g330ua055.dgn
CU 12390
EA 0G3301

Dist	COUNTY	ROUTE	POST MILES TOTAL PROJECT	SHEET No.	TOTAL SHEETS
12	Ora	91	9.1/15.1	629	949

REGISTERED ELECTRICAL ENGINEER 10-29-10 DATE

PLANS APPROVAL DATE 10-25-10

REGISTERED PROFESSIONAL ENGINEER JOANNE VO No. E 16748 Exp. 9/30/12 ELECTRICAL STATE OF CALIFORNIA

THE STATE OF CALIFORNIA OR ITS OFFICERS OR AGENTS SHALL NOT BE RESPONSIBLE FOR THE ACCURACY OR COMPLETENESS OF SCANNED COPIES OF THIS PLAN SHEET.

NOTES: (THIS SHEET ONLY)

1. FOR GENERAL NOTES, LEGEND AND ABBREVIATIONS, SEE SHEET E-1 AND E-2.

[2] HYBRID CABLE CONSISTS OF:
CAMERA CONTROL CONDUCTORS
AC LINE
VIDEO (COAXIAL)

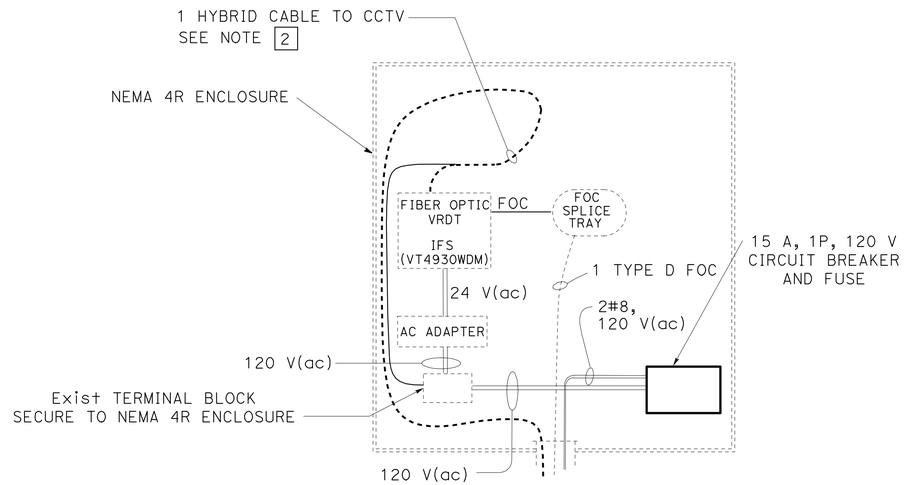

DETAIL B
Exist NEMA 4R ENCLOSURE
(FOR SIZE AND NUMBER OF CONDUCTORS SEE ELECTRICAL PLANS)

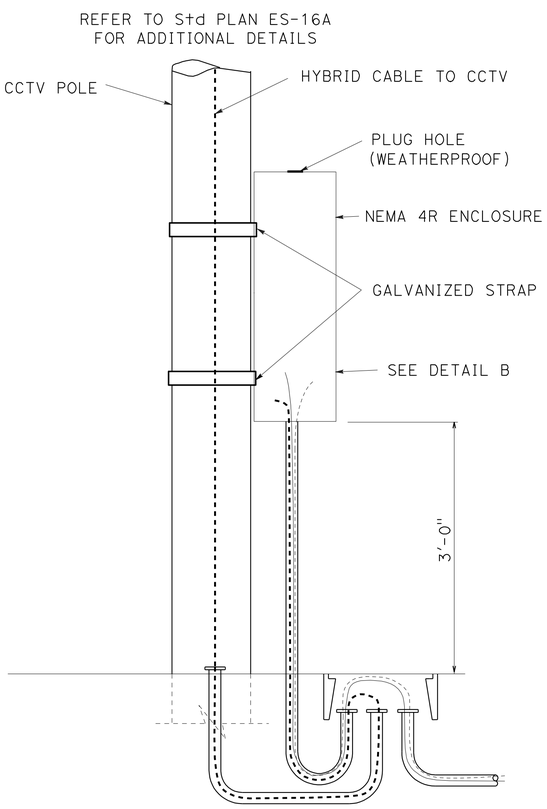

SIDE VIEW

DETAIL A
CCTV POLE

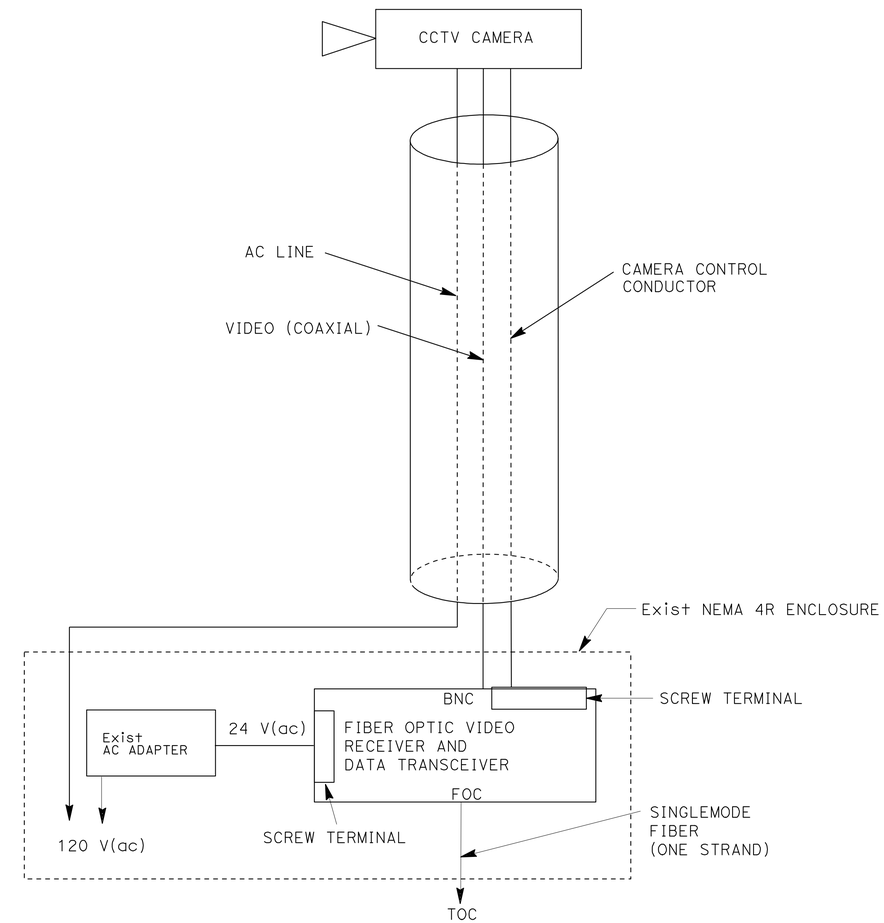

DETAIL C
CCTV EQUIPMENT

COMMUNICATION SYSTEM - OCTA
(TYPICAL FIBER OPTIC AND CCTV POLE DETAIL)

NO SCALE

THIS PLAN IS ACCURATE FOR ELECTRICAL WORK ONLY.

E-54

STATE OF CALIFORNIA - DEPARTMENT OF TRANSPORTATION
Caltrans® **ELECTRICAL DESIGN**

FUNCTIONAL SUPERVISOR: SHAHRAM SHAHRIARI
CALCULATED-DESIGNED BY: JOANNE VO
CHECKED BY: S. SHAHRIARI
REVISED BY
DATE REVISED

LAST REVISION 05-11-10
DATE PLOTTED => 17-DEC-2010
TIME PLOTTED => 09:54

DIST	COUNTY	ROUTE	POST MILE TOTAL PROJECT	SHEET No	TOTAL SHEETS
12	Ora	91	9.1/15.1	630	949

08-12-10
REGISTERED ELECTRICAL ENGINEER

10-25-10
PLANS APPROVAL DATE

REGISTERED PROFESSIONAL ENGINEER
JOANNE VO
No. E 16748
Exp. 9/30/12
ELECTRICAL
STATE OF CALIFORNIA

The State of California or its officers or agents shall not be responsible for the accuracy or completeness of electronic copies of this plan sheet.

NOTES: (THIS SHEET ONLY)

1. FOR GENERAL NOTES, LEGEND AND ABBREVIATIONS, SEE SHEET E-1 AND E-2.
2. FOUNDATION OF THE STEPDOWN TRANSFORMER TO BE 18" X 18". ANCHORAGE PER MANUFACTURER TEMPLATE.

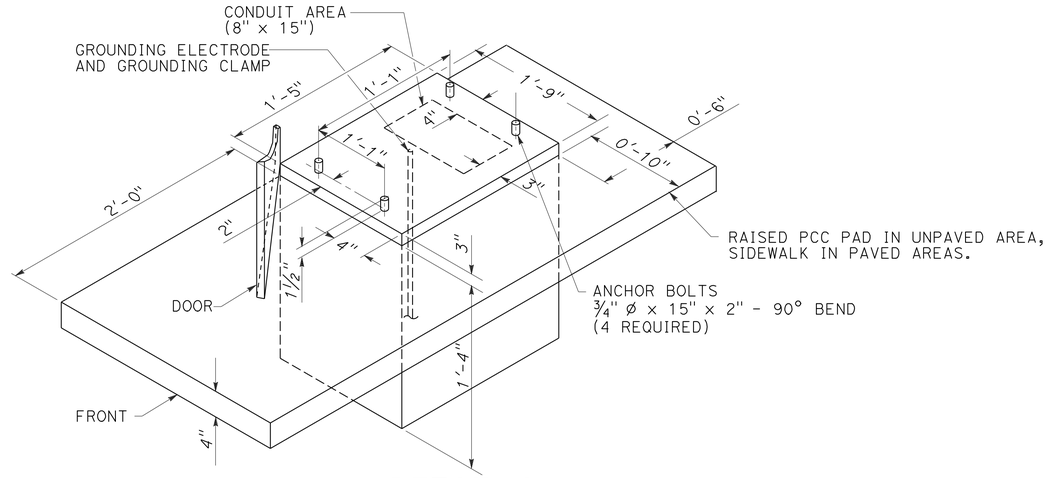

DETAIL A

EXISTING CONTROLLER TYPE 303 ENCLOSURE ON NEW FOUNDATION

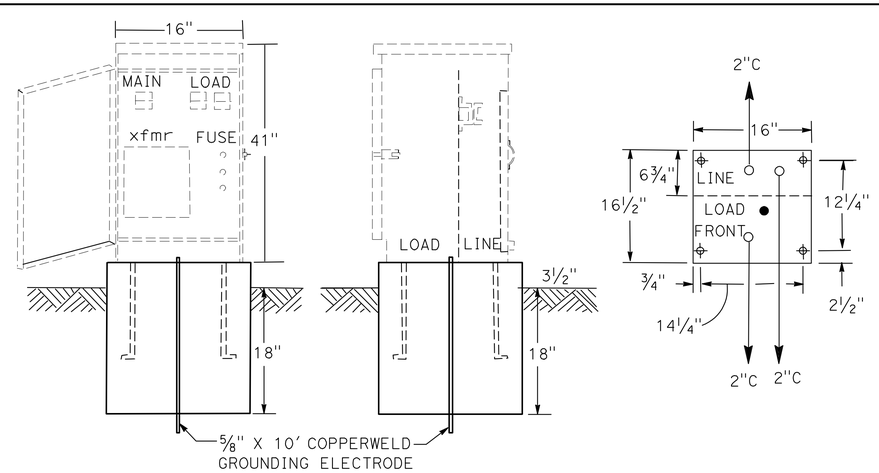

DETAIL B

EXISTING STEPDOWN TRANSFORMER ENCLOSURE ON NEW FOUNDATION

THIS PLAN IS ACCURATE FOR ELECTRICAL WORK ONLY.

OCTA FACILITY
(FOUNDATION DETAILS)

NO SCALE

E-55

REVISED BY	DATE REVISED
JOANNE VO	SHAHRAM SHAHRIARI
CALCULATED/DESIGNED BY	CHECKED BY
PROJECT ENGINEER	SHAHRAM SHAHRIARI

STATE OF CALIFORNIA - DEPARTMENT OF TRANSPORTATION
Caltrans
ELECTRICAL DESIGN

LAST REVISION 07-01-10
DATE PLOTTED => 16-DEC-2010
TIME PLOTTED => 17:14

DIST	COUNTY	ROUTE	POST MILE TOTAL PROJECT	SHEET No	TOTAL SHEETS
12	Ora	91	9.1/15.1	631	949

08-12-10
REGISTERED ELECTRICAL ENGINEER

10-25-10
PLANS APPROVAL DATE

REGISTERED PROFESSIONAL ENGINEER JOANNE VO No. E 16748 Exp. 9/30/10 ELECTRICAL STATE OF CALIFORNIA

The State of California or its officers or agents shall not be responsible for the accuracy or completeness of electronic copies of this plan sheet.

LEGEND: (THIS SHEET ONLY)

- [L] EXISTING 550 W, 120 V, 170 CONTROLLER FOR LOOPS IN NEW LOCATION.
- [C] EXISTING 550 W, 120 V, CAMERA IN NEW LOCATION.
- [T] EXISTING STEP-DOWN TRANSFORMER IN NEW LOCATION, SIZE AS SPECIFIED IN TABLE OF SHEET E-90.
- V NEW VAULT
- —— NEW #6 AWG.
- ○ NEW SPLICE.
- [L] EXISTING 550 W, 120 V, 170 CONTROLLER FOR LOOPS.
- [C] EXISTING 550 W, 120 V, CAMERA.
- [S] EXISTING 120 V SIGN LIGHTING.
- [T] EXISTING STEP-DOWN TRANSFORMER, SIZE AS SPECIFIED IN TABLE OF SHEET E-90.
- V EXISTING VAULT
- ---- EXISTING #6 AWG.

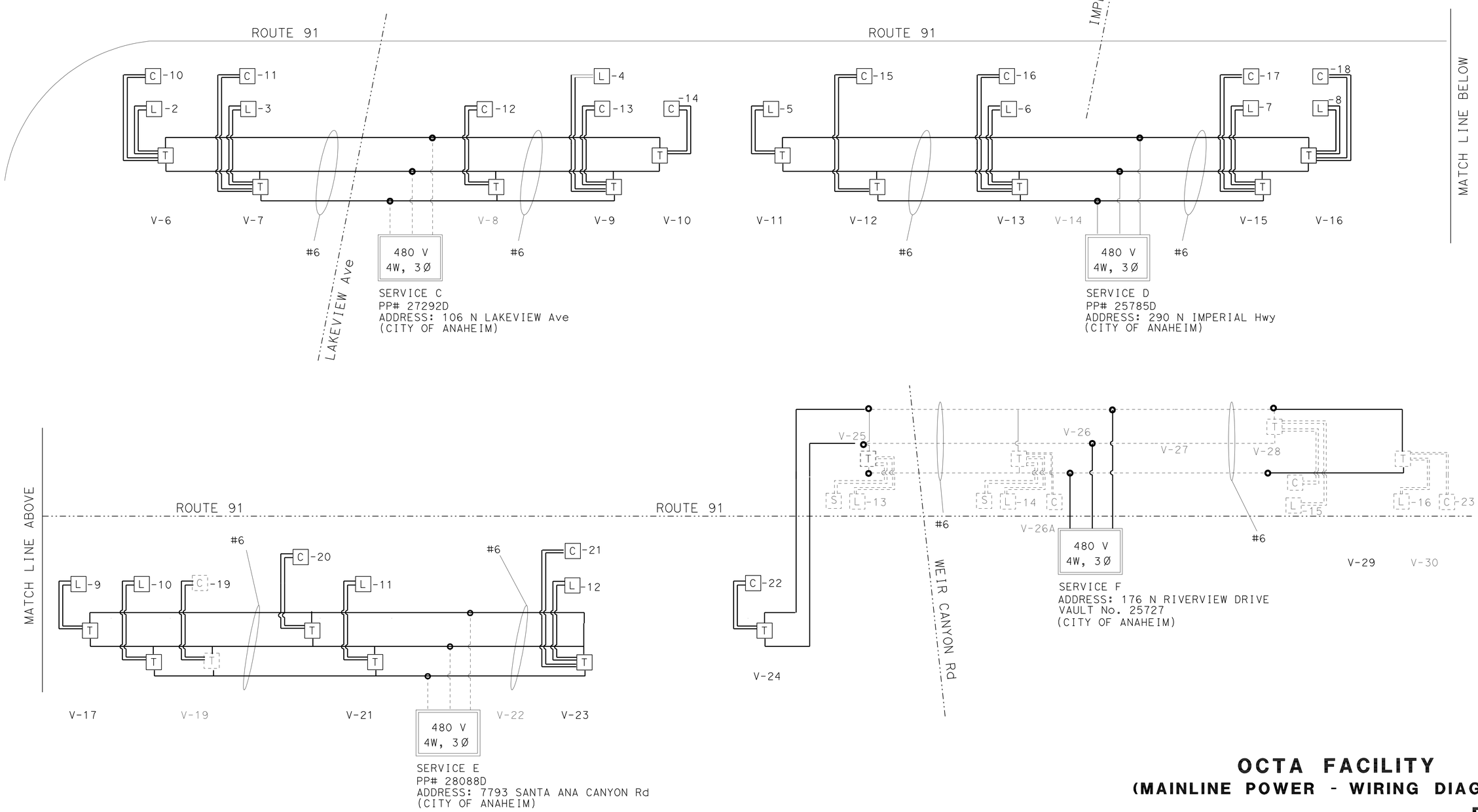

THIS PLAN IS ACCURATE FOR ELECTRICAL WORK ONLY.

OCTA FACILITY
(MAINLINE POWER - WIRING DIAGRAM)

NO SCALE

E-56

REVISED BY	DATE REVISED
JOANNE VO	SHAHRAM SHAHRIARI
CALCULATED/DESIGNED BY	CHECKED BY
PROJECT ENGINEER	SHAHRIARI

STATE OF CALIFORNIA - DEPARTMENT OF TRANSPORTATION
Caltrans
ELECTRICAL DESIGN

LAST REVISION 06-10-10
DATE PLOTTED => 16-DEC-2010
TIME PLOTTED => 17:14

RELATIVE BORDER SCALE IS IN INCHES 0 1 2 3
USERNAME => trphils
DGN FILE => c0g330ua058.dgn
CU 12390
EA 0G3301

Dist	COUNTY	ROUTE	POST MILES TOTAL PROJECT	SHEET No.	TOTAL SHEETS
12	Ora	91	9.1/15.1	632	949

REGISTERED ELECTRICAL ENGINEER 08-12-10 DATE

PLANS APPROVAL DATE 10-25-10

REGISTERED PROFESSIONAL ENGINEER PETER NGO No. E 16503 Exp. 09/30/11 ELECTRICAL STATE OF CALIFORNIA

THE STATE OF CALIFORNIA OR ITS OFFICERS OR AGENTS SHALL NOT BE RESPONSIBLE FOR THE ACCURACY OR COMPLETENESS OF SCANNED COPIES OF THIS PLAN SHEET.

VAULT 47

EXISTING 26 SMFO CABLE

FIBER No.
26
25
24
23
22
21
20
19
18
17
16
15
14
13
12
11
10
9
8
7
6
5
4
3
2
1

VAULT 5

FIBER No.	72 SMFO CABLE THROUGH VAULT 5	FIBER No.
72	CPTC-ODD-W-1	72
71	CPTC-ODD-W-2	71
70	CPTC-EVEN-W-1	70
69	CPTC-EVEN-W-2	69
68		68
67		67
66		66
65		65
64		64
63		63
62		62
61		61
60		60
59		59
58	SP-19	58
57		57
56		56
55		55
54		54
53		53
52	SP-18	52
51	SP-17	51
50	SP-16	50
49	SP-15	49
48	SP	48
47	SP	47
1-46	FUTURE USE	1-46

VAULT 6

FIBER No.	REMARKS 72 SMFO CABLE	FIBER No.
63-72	FUTURE USE	63-72
62		62
61		61
60	SP-18	60
59	SP-17	59
58		58
57		57
56		56
55		55
54		54
53		53
52		52
51		51
50		50
49		49
48	SP-19	48
47		47
46		46
45		45
44		44
43		43
42		42
41		41
40		40
39		39
38		38
37		37
36		36
35		35
34		34
33		33
32		32
31		31
30		30
29		29
28		28
27		27
26		26
25	SP-21	25
24	SP-16	24
23	SP-15	23
22	SP-14	22
21	SP-13	21
20	SP-12	20
19	SP-11	19
18	SP-10	18
17	SP-9	17
16	SP-8	16
15	SP-7	15
14	SP-6	14
13	SP-5	13
12	SP-4	12
11	SP-3	11
10	SP-2	10
9	SP-1	9
1-8		1-8

VAULT 4

EXISTING 32 SMFO CABLE

FIBER No.
32
31
30
29
28
27
26
25
24
23
22
21
20
19
18
17
16
15
14
13
12
11
10
9
8
7
6
5
4
3
2
1

FIBER No.	72 SMFO CABLE THROUGH VAULT 5	FIBER No.
33-72	FUTURE USE	33-72
32	CPTC-ODD-W-1	32
31	CPTC-ODD-W-2	31
30	CPTC-EVEN-W-1	30
29	CPTC-EVEN-W-2	29
28		28
27		27
26		26
25		25
24		24
23		23
22	SP	22
21		21
20		20
19		19
18		18
17	SP-21	17
16	SP	16
15	SP	15
14	SP-14	14
13	SP-13	13
12	SP-12	12
11	SP-11	11
10	SP-10	10
9	SP-9	9
8	SP-8	8
7	SP-7	7
6	SP-6	6
5	SP-5	5
4	SP-4	4
3	SP-3	3
2	SP-2	2
1	SP-1	1

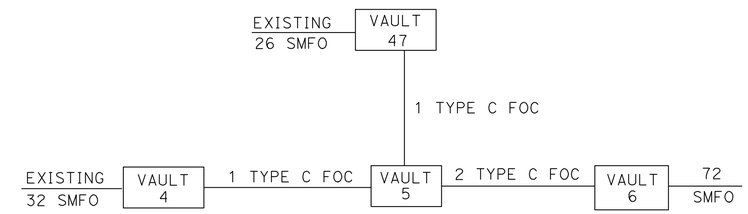

LEGEND:

—●— : SPLICED

OCTA FACILITY

(SPLICE SCHEDULE FOR VAULTS 4, 5, 6, AND 47)

NO SCALE

THIS PLAN ACCURATE FOR ELECTRICAL WORK ONLY.

E-57

STATE OF CALIFORNIA - DEPARTMENT OF TRANSPORTATION
Caltrans ELECTRICAL SYSTEMS

FUNCTIONAL SUPERVISOR: HENRY PHAM
CALCULATED-DESIGNED BY: PETER NGO
CHECKED BY: PAULINE NGUYEN
REVISED BY
DATE REVISED

LAST REVISION 03-27-10
DATE PLOTTED => 16-DEC-2010
TIME PLOTTED => 17:14

Dist	COUNTY	ROUTE	POST MILES TOTAL PROJECT	SHEET No.	TOTAL SHEETS
12	Ora	91	9.1/15.1	633	949

REGISTERED ELECTRICAL ENGINEER 08-12-10 DATE

10-25-10
PLANS APPROVAL DATE

REGISTERED PROFESSIONAL ENGINEER PETER NGO No. E 16503 Exp 9/30/11 ELECTRICAL STATE OF CALIFORNIA

THE STATE OF CALIFORNIA OR ITS OFFICERS OR AGENTS SHALL NOT BE RESPONSIBLE FOR THE ACCURACY OR COMPLETENESS OF ELECTRONIC COPIES OF THIS PLAN SHEET.

NOTE: (THIS SHEET ONLY)

FOR GENERAL NOTES, LEGEND AND ABBREVIATIONS, SEE SHEET E-1 AND E-2.

OCTA FIBER OPTIC CABLES

EXISTING ELEMENTS AND CIRCUITS	EXISTING OCTA 26 SMFO FIBER No.	VAULT 47 SEE E-57 FOR SPLICING DETAILS	EXISTING OCTA 32 SMFO	VAULT 4 SEE E-57 FOR SPLICING DETAILS	VAULT 6 SEE E-57 FOR SPLICING DETAILS	EXISTING ELEMENTS AND CIRCUITS	NEW OCTA 72 SMFO FIBER No.	VAULT 7 (LOOP-3)	VAULT 7 (CCTV-11)	VAULT 6 (LOOP-2)	VAULT 9 (LOOP-4)	VAULT 8 (CCTV-12)	VAULT 9 (CCTV-13)	VAULT 10 (CCTV-14)	VAULT 11 (LOOP-5)	VAULT 12 (CCTV-15)	VAULT 13 (LOOP-6)	VAULT 13 (CCTV-16)	VAULT 15 (LOOP-7)	VAULT 15 (CCTV-17)	VAULT 16 (CCTV-18)	VAULT 16 (LOOP-8)	VAULT 17 (LOOP-9)	VAULT 19 (LOOP-10)	VAULT 19 (CCTV-19)	VAULT 21 (CCTV-20)	VAULT 21 (LOOP-11)	VAULT 23 (CCTV-21)	VAULT 23 (LOOP-12)	VAULT 24 (CCTV-22)	NEW OCTA 72 SMFO FIBER No.	VAULT 24	EXISTING OCTA 62 SMFO FIBER No.	EXISTING OCTA 46 SMFO FIBER No.	VAULT 28	NEW OCTA 46 SMFO FIBER No.	NEW OCTA 46 SMFO FIBER No.	VAULT 30	EXISTING OCTA 46 SMFO FIBER No.	EXISTING ELEMENTS AND CIRCUITS
CCTV-9	7					CCTV-17	1													1>											1	<>	1	1	<>	1	1	<>	1	
CCTV-4	8					CCTV-18	2														1>										2	<>	2	2	<>	2	2	<>	2	
CCTV-3	9					CCTV-19	3																		1>						3	<>	3	3	<>	3	3	<>	3	
CCTV-2	10					CCTV-20	4																			1>					4	<>	4	4	<>	4	4	<>	4	
CCTV-1	11					CCTV-21	5																					1>			5	<>	5	5	<>	5	5	<>	5	
VMS-91W-2	13					CCTV-22	6																							1>	6	<>	6	6	<>	6	6	<>	6	
VMS-91W-1	14					SPARE	7-25																								7-25	<>	7-25	7	<>	7	7	<>	7	
ER SR-91W-4	15					CCTV-7	26																								26	<>	26	8	<>	8	8	<>	8	
ER SR-91W-3	16					CCTV-5	27																								27	<>	27	9	<>	9	9	<>	9	
ER SR-91W-2	17					CCTV-6	28																								28	<>	28	10	<>	10	10	<>	10	
ER SR-91W-1	18					CCTV-8	29																								29	<>	29	11	<>	11	11	<>	11	
CPTC EVEN-W-2	19					CCTV-10	30																								30	<>	30	12	<>	12	12	<>	12	
CPTC EVEN-W-1	20					ER SR-55-4	31																								31	<>	31	13	<>	13	13	<>	13	
CPTC ODD-W-2	21					ER SR-55-3	32																								32	<>	32	14	<>	14	14	<>	14	
CPTC ODD-W-1	22					ER SR-55-2	33																								33	<>	33	15	<>	15	15	<>	15	
CPTC EVEN-W-2	23					ER SR-55-1	34																								34	<>	34	16	<>	16	16	<>	16	
CPTC EVEN-W-1	24					VMS-55-2	35																								35	<>	35	17	<>	17	17	<>	17	CT-E-2
CPTC-ODD-W-2	25					VMS-55-1	36																								36	<>	36	18	<>	18	18	<>	18	CT-E-1
CPTC-ODD-W-1	26					CCTV-11	37		1>																						37	<>	37	19	<>	19	19	<>	19	CPTC EVEN-E-2
						CCTV-12	38					1>																			38	<>	38	20	<>	20	20	<>	20	CPTC EVEN-E-1
						CCTV-13	39						1>																		39	<>	39	21	<>	21	21	<>	21	CPTC ODD-E-2
						CCTV-14	40							1>																	40	<>	40	22	<>	22	22	<>	22	CPTC ODD-E-1
						CCTV-15	41									1>															41	<>	41	23	<>	23	23	<>	23	CT-NS-1
						CCTV-16	42											1>													42	<>	42	24	<>	24	24	<>	24	CT-NS-2
						CCTV-9	43																								43	<>	43	25	<>	25	25	<>	25	
						CCTV-4	44																								44	<>	44	26	<>	26	26	<>	26	CCTV-21
						CCTV-3	45																								45	<>	45	27	<>	27	27	<>	27	CCTV-22
						CCTV-2	46																								46	<>	46	28	<>	28	28	<>	28	CCTV-23
						CCTV-1	47																								47	<>	47	29	<>	29	29	<>	29	CCTV-24
						SPARE	48																								48	<>	48	30	<>	30	30	<>	30	CCTV-25
						VMS-91W-2	49																								49	<>	49	31	<>	31	31	<>	31	CCTV-26
						VMS-91W-1	50																								50	<>	50	32	<>	32	32	<>	32	CCTV-27
						ER SR-91W-4	51																								51	<>	51	33	<>	33	33	<>	33	CCTV-28
						ER SR-91W-3	52																								52	<>	52	34	<>	34	34	<>	34	CCTV-29
CPTC ODD-W-1		32				ER SR-91W-2	53																								53	<>	53	35	<>	35	35	<>	35	ER-91E2-4
CPTC ODD -W-2		31				ER SR-91W-1	54																								54	<>	54	36	<>	36	36	<>	36	ER-91E2-3
CPTC EVEN-W-1		30				CPTC EVEN-W-2	55				<13>						<13>					<13>		<13>							55	<>	55	37	<>	37	37	<>	37	ER-91E2-2
CPTC EVEN-W-2		29				CPTC EVEN-W-1	56				<2>						<2>					<24>		<24>							56	<>	56	38	<>	38	38	<>	38	ER-91E2-1
VWS-55-1		28				CPTC ODD-W-2	57	<13>							<13>				<13>				<13>				<13>				57	<>	57	39	<>	39	39	<>	39	ER-91E1-4
VMS-55-2		27				CPTC ODD-W-1	58	<24>							<24>				<24>				<24>				<24>				58	<>	58	40	<>	40	40	<>	40	ER-91E1-3
ER SR-55-1		26				SPARE	59-60																								59-60	<>	59-60	41	<>	41	41	<>	41	ER-91E1-2
ER SR-55-2		25				CT-W-2	61																								61	<>	61	42	<>	42	42	<>	42	ER-91E1-1
ER SR-55-3		24				CT-W-1	62																								62	<>	62	43	<>	43	43	<>	43	CCTV-31
ER SR-55-4		23					63-72																								63-72			44	<>	44	44	<>	44	CCTV-32
CCTV-8		21																																45	<>	45	45	<>	45	VMS-91E-2
CCTV-6		20																																46	<>	46	46	<>	46	VMS-91E-1
CCTV-5		19																																						
CCTV-7		18																																						
																															VAULT 24			VAULT 28			VAULT 30			

LEGEND:

<xx> REPRESENT TYPE D FIBER OPTIC STRAND NUMBER
> REPRESENTS ONE DIRECTIONAL (ARROW POINTS TO THE DIRECTION OF TRANSMISSION)
< > REPRESENTS BIDIRECTIONAL (ARROW POINTS TO THE DIRECTION OF TRANSMISSION)

THIS PLAN IS ACCURATE FOR ELECTRICAL WORK ONLY.

OCTA FACILITY (SPLICE SCHEDULE)

E-58

REVISED BY | DATE REVISED
PETER NGO | PAULINE NGUYEN
CALCULATED-DESIGNED BY | CHECKED BY
FUNCTIONAL SUPERVISOR: HENRY PHAM

STATE OF CALIFORNIA - DEPARTMENT OF TRANSPORTATION
ELECTRICAL SYSTEMS
Caltrans

LAST REVISION 03-01-10 | DATE PLOTTED => 16-DEC-2010 | TIME PLOTTED => 17:14

Dist	COUNTY	LOCATION CODE	POST MILES TOTAL PROJECT	SHEET No.	TOTAL SHEETS
12	Ora	91	9.1/15.1	634	949

REGISTERED ELECTRICAL ENGINEER — DATE 10-29-10

PLANS APPROVAL DATE 10-25-10

REGISTERED PROFESSIONAL ENGINEER — JOANNE VO — No. E 16748 — Exp. 9/30/12 — ELECTRICAL — STATE OF CALIFORNIA

THE STATE OF CALIFORNIA OR ITS OFFICERS OR AGENTS SHALL NOT BE RESPONSIBLE FOR THE ACCURACY OR COMPLETENESS OF SCANNED COPIES OF THIS PLAN SHEET.

LEGEND: (FOR SHEETS E-59 AND E-60 ONLY)

- NEW SPLICE VAULT
- PULL THROUGH VAULT
- EXISTING SPLICE VAULT
- NEW OCTA FIBER OPTIC CABLE
- EXISTING FIBER OPTIC CABLE
- NEW SPLICING
- EXISTING SPLICING
- OCTA ELEMENT
- STATE ELEMENT
- NEW STATE FIBER OPTIC CABLE
- EXISTING OCTA ELEMENT (FOR INFORMATION ONLY)

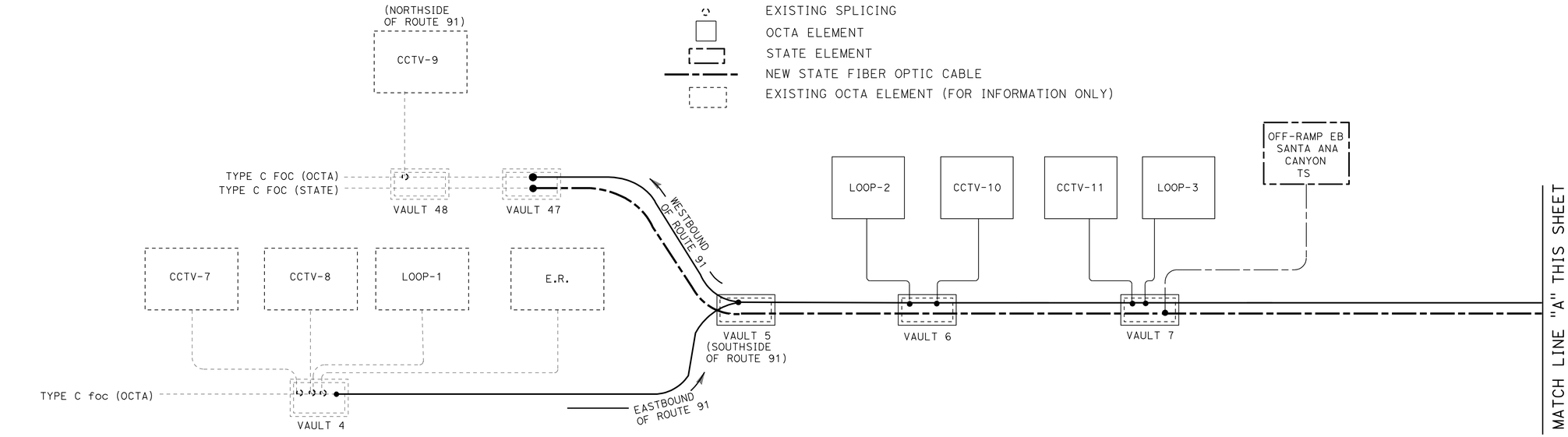

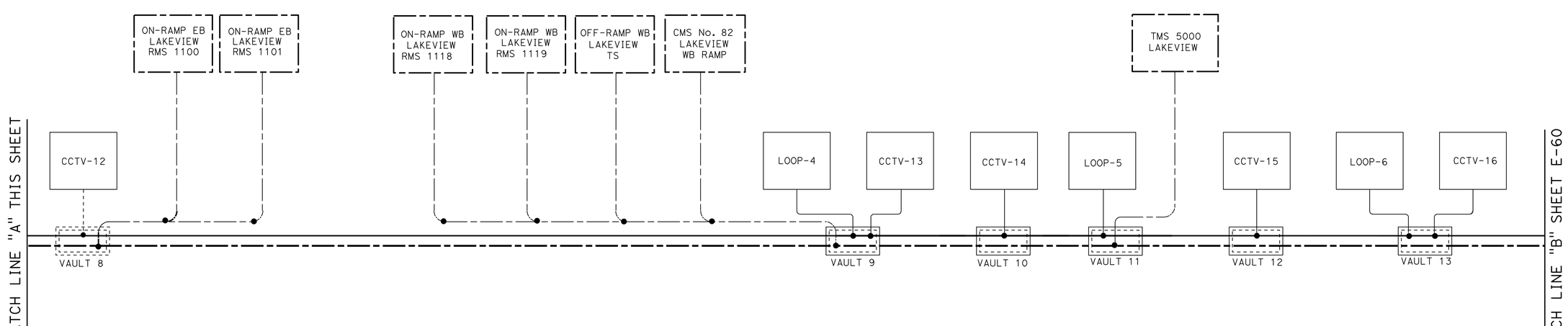

NOTE: (THIS SHEET ONLY)

FOR GENERAL NOTES, LEGEND AND ABBREVIATIONS, SEE SHEETS E-1 AND E-2.

THIS PLAN IS ACCURATE FOR ELECTRICAL WORK ONLY.

OCTA FACILITY COMMUNICATION SYSTEM (ELEMENTS SCHEMATIC)

NO SCALE

E-59

STATE OF CALIFORNIA - DEPARTMENT OF TRANSPORTATION — Caltrans — ELECTRICAL DESIGN

FUNCTIONAL SUPERVISOR: SHAHRAM SHAHRIARI

CALCULATED-DESIGNED BY: JOANNE VO — CHECKED BY: SHAHRAM SHAHRIARI

REVISED BY — DATE REVISED

LAST REVISION 10-13-10 — DATE PLOTTED => 16-DEC-2010 — TIME PLOTTED => 17:14

Dist	COUNTY	LOCATION CODE	POST MILES TOTAL PROJECT	SHEET No.	TOTAL SHEETS
12	Ora	91	9.1/15.1	635	949

REGISTERED ELECTRICAL ENGINEER — DATE 10-29-10

PLANS APPROVAL DATE 10-25-10

REGISTERED PROFESSIONAL ENGINEER — JOANNE VO No. E 16748 Exp. 9/30/12 ELECTRICAL — STATE OF CALIFORNIA

THE STATE OF CALIFORNIA OR ITS OFFICERS OR AGENTS SHALL NOT BE RESPONSIBLE FOR THE ACCURACY OR COMPLETENESS OF SCANNED COPIES OF THIS PLAN SHEET.

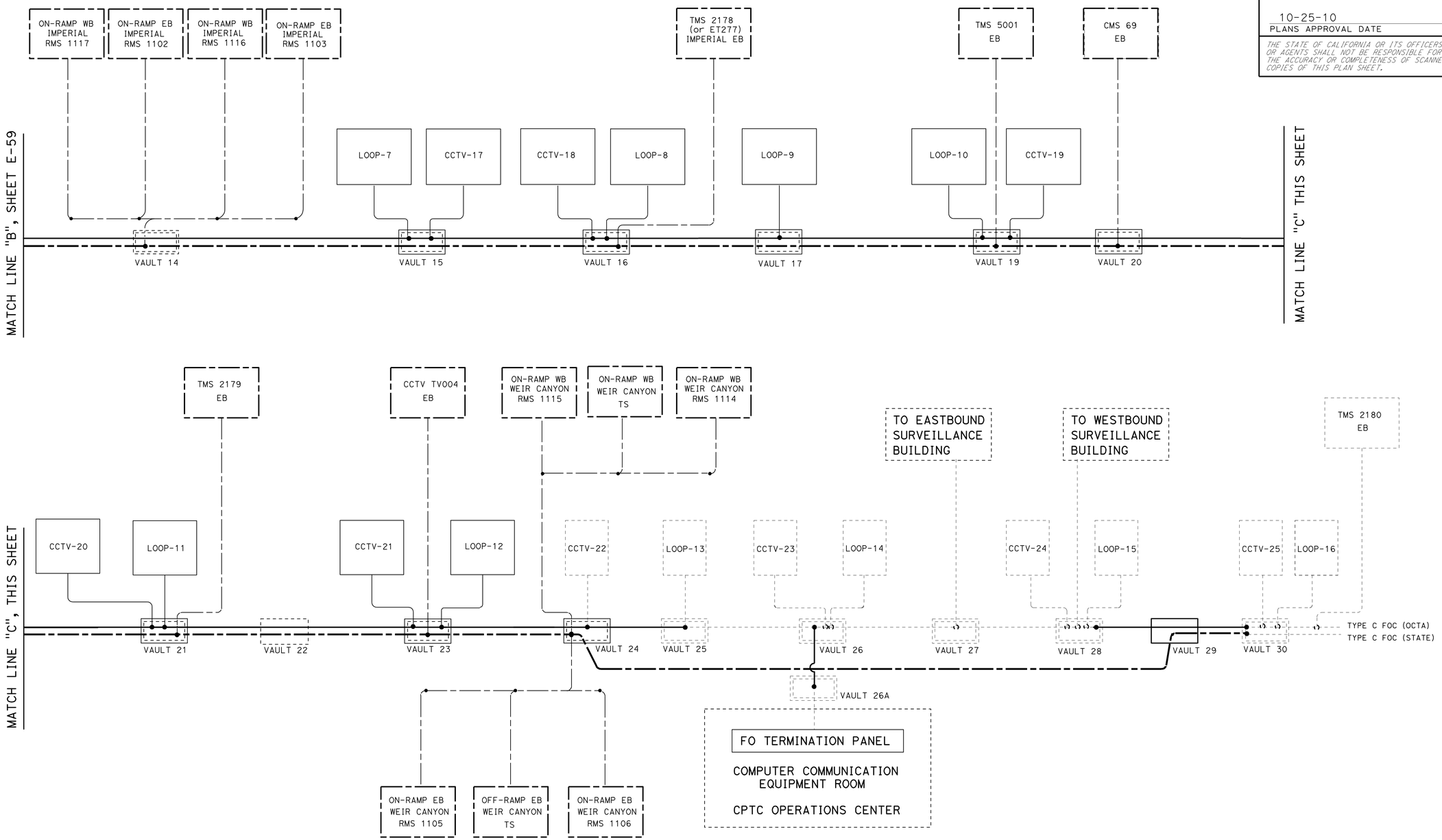

NOTE: (THIS SHEET ONLY)

FOR GENERAL NOTES, LEGEND AND ABBREVIATIONS, SEE SHEETS E-1 AND E-2.

OCTA FACILITY COMMUNICATION SYSTEM (ELEMENTS SCHEMATIC)

NO SCALE

E-60

THIS PLAN IS ACCURATE FOR ELECTRICAL WORK ONLY.

STATE OF CALIFORNIA - DEPARTMENT OF TRANSPORTATION

Caltrans® ELECTRICAL DESIGN

FUNCTIONAL SUPERVISOR: SHAHRAM SHAHRIARI

CALCULATED-DESIGNED BY: JOANNE VO — SHAHRAM SHAHRIARI

CHECKED BY

REVISED BY — DATE REVISED

LAST REVISION 10-13-10 — DATE PLOTTED => 16-DEC-2010 — TIME PLOTTED => 17:14

Dist	COUNTY	LOCATION CODE	POST MILES TOTAL PROJECT	SHEET No.	TOTAL SHEETS
12	Ora	91	9.1/15.1	636	949

REGISTERED ELECTRICAL ENGINEER 08-12-10 DATE

PLANS APPROVAL DATE 10-25-10

REGISTERED PROFESSIONAL ENGINEER JOANNE VO No. E 16748 Exp. 9/30/12 ELECTRICAL STATE OF CALIFORNIA

THE STATE OF CALIFORNIA OR ITS OFFICERS OR AGENTS SHALL NOT BE RESPONSIBLE FOR THE ACCURACY OR COMPLETENESS OF SCANNED COPIES OF THIS PLAN SHEET.

FOR ACCURATE RIGHT OF WAY AND ACCESS DATA,
CONTACT RIGHT OF WAY ENGINEERING AT THE DISTRICT OFFICE.

CONDUCTOR AND CONDUIT SCHEDULE

CONDUCTOR TYPE	1	2	3	4*	5
EXISTING OCTA FOC	1 (E)				1 (R)
TYPE C CABLE (OCTA)			1 (N)		
TYPE C CABLE(STATE)			-	1(E)	
TYPE D CABLE		1 (E)			
CONDUIT SIZE	3" (E)	2"(E)	3"(N)	4"(E)	3"(R)

(R): RC EXISTING CONDUIT OR CONDUCTOR
(N): NEW CONDUIT OR CONDUCTOR
(E): EXISTING CONDUIT OR CONDUCTOR
(*): SEE SHEET E-91 FOR STATE FOC REFERENCE.

NOTES: (FOR SHEETS E-61 THRU E-89 ONLY)

1. CONNECT ALL RELOCATED OCTA CCTV TO FOC AFTER SWITCHING FROM TEMPORARY FOC OVER TO PERMANENT FOC. (SEE SHEETS E-57, E-58, E-59 AND E-60 FOR SPLICING SCHEDULE).
2. CONNECT ALL RELOCATED OCTA TYPE 170 LOOP CONTROLLER IN MODEL 303 ENCLOSURE TO PERMANENT FOC.
3. REMOVE ALL TEMPORARY WOOD POLES AND TEMPORARY OVERHEAD CABLES, REMOVE AND SALVAGE ALL TEMPORARY STEP DOWN TRANSFORMER IN THE 4R NEMA BOX COMPLETELY AFTER THE PERMANENT FO SYSTEM FROM SHEETS E-61 TO E-119 IS FUNCTIONING.
4. SEE SHEET E-56 FOR OCTA POWER SERVICE LINE, WIRING DIAGRAM.
5. SEE SHEETS E-1 AND E-2 FOR GENERAL NOTES, LEGEND, AND ABBREVIATIONS.
6. SEE SHEET E-90 FOR POWER DISTRIBUTION IN OCTA'S ELEMENTS.

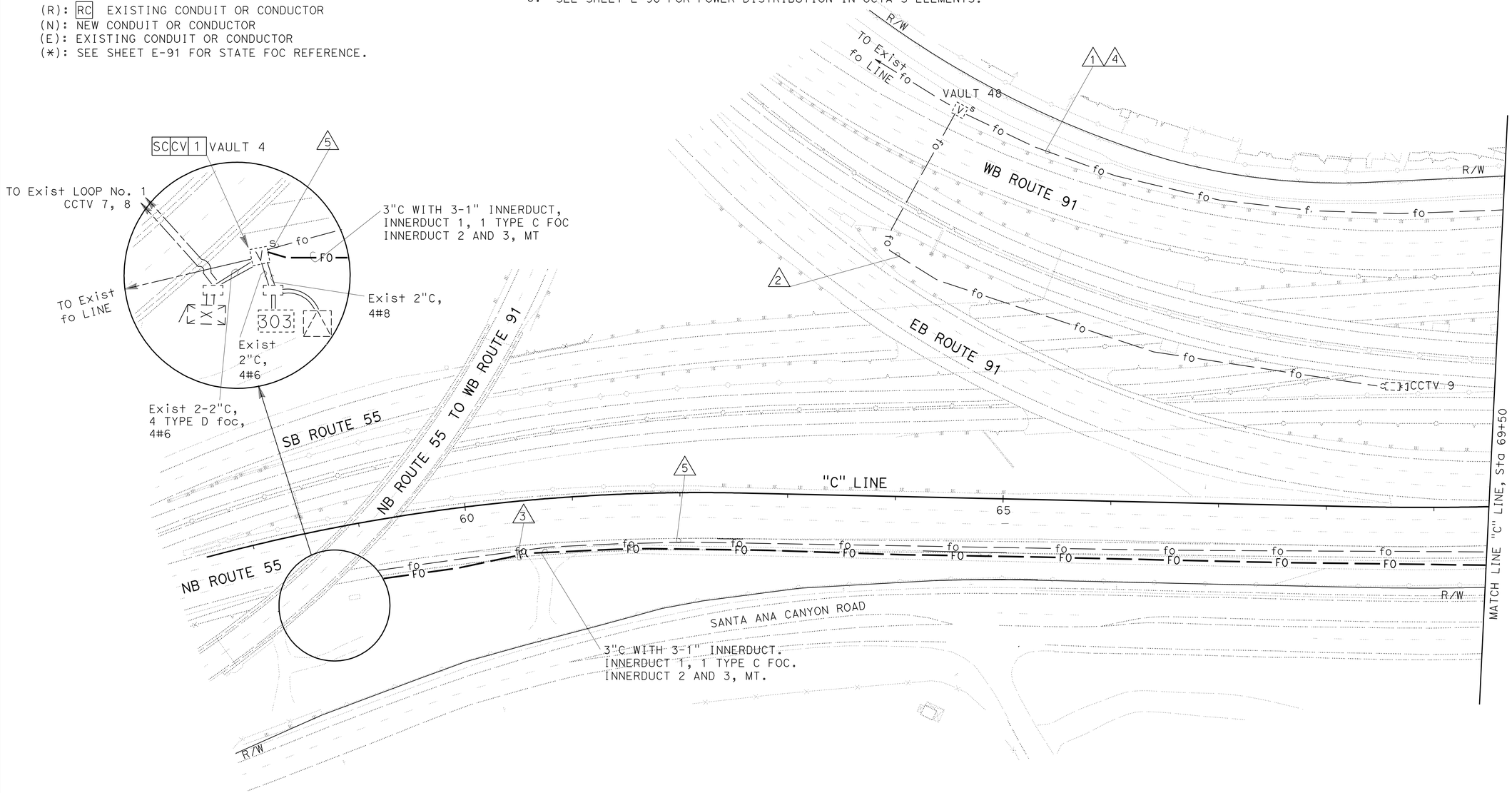

NOTES: (THIS SHEET ONLY)

1. SPLICE EXISTING OCTA TYPE C smfo TO TYPE C SMFO (SEE SHEETS E-57, E-58, E-59 AND E-60 FOR SPLICING SCHEDULE).
2. SEE SHEET E-91 FOR STATE FOC REFERENCE.

THIS PLAN IS ACCURATE FOR ELECTRICAL WORK ONLY.

OCTA FACILITY

SCALE: 1" = 50'

E-61

STATE OF CALIFORNIA - DEPARTMENT OF TRANSPORTATION
Caltrans® ELECTRICAL DESIGN

FUNCTIONAL SUPERVISOR: SHAHRAM SHAHRIARI
CALCULATED-DESIGNED BY: JOANNE VO
CHECKED BY: SHAHRAM SHAHRIARI
REVISED BY / DATE REVISED

LAST REVISION 10-13-10
DATE PLOTTED => 17-DEC-2010
TIME PLOTTED => 09:54

Dist	COUNTY	LOCATION CODE	POST MILES TOTAL PROJECT	SHEET No.	TOTAL SHEETS
12	Ora	91	9.1/15.1	637	949

REGISTERED ELECTRICAL ENGINEER 08-12-10 DATE

PLANS APPROVAL DATE 10-25-10

REGISTERED PROFESSIONAL ENGINEER JOANNE VO No. E 16748 Exp. 9/30/12 ELECTRICAL STATE OF CALIFORNIA

THE STATE OF CALIFORNIA OR ITS OFFICERS OR AGENTS SHALL NOT BE RESPONSIBLE FOR THE ACCURACY OR COMPLETENESS OF SCANNED COPIES OF THIS PLAN SHEET.

FOR ACCURATE RIGHT OF WAY AND ACCESS DATA,
CONTACT RIGHT OF WAY ENGINEERING AT THE DISTRICT OFFICE.

CONDUCTOR AND CONDUIT SCHEDULE

CONDUCTOR TYPE	1	2	3	4 (*)	5	6
TYPE C CABLE (OCTA)		1(N)	1(N)			
TYPE C CABLE (STATE)				1(E)		1(R)
EXISTING OCTA FOC	1(E)	1(R)			1(R)	
CONDUIT SIZE	3"(E)	3"(E)	3"(N)	4"(E)	3"(R)	4"(R)

(R): RC EXISTING CONDUIT OR CONDUCTOR
(N): NEW CONDUIT OR CONDUCTOR
(E): EXISTING CONDUIT OR CONDUCTOR
(*): SEE SHEET E-92 FOR STATE FOC REFERENCE.

NOTES: (THIS SHEET ONLY)

1. SEE SHEETS E-57, E-58 AND E-59 FOR SPLICING SCHEDULE.
2. FOR GENERAL NOTES, LEGEND, AND ABBREVIATIONS, SEE SHEETS E-1, E-2 AND E-61.
3. SEE SHEET E-92 FOR STATE COMMUNICATION REFERENCE.

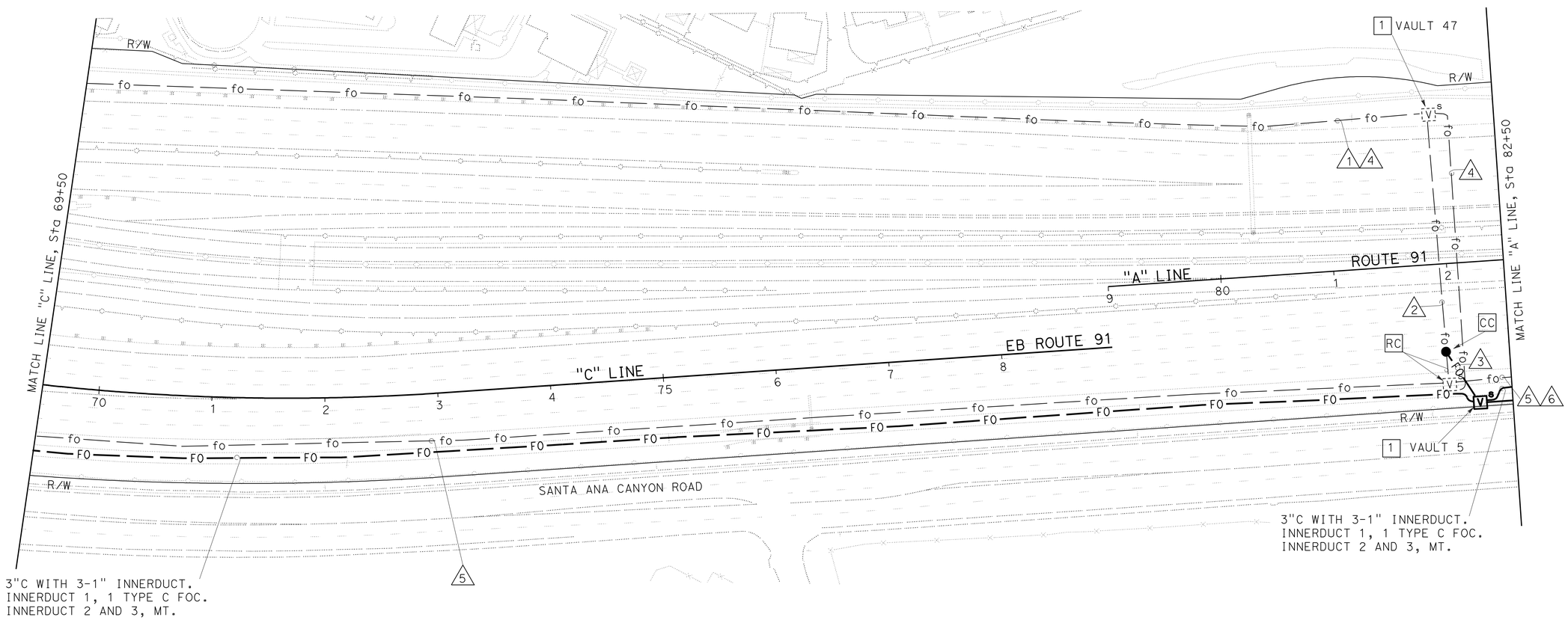

OCTA FACILITY

SCALE: 1" = 50'

E-62

THIS PLAN IS ACCURATE FOR ELECTRICAL WORK ONLY.

STATE OF CALIFORNIA - DEPARTMENT OF TRANSPORTATION
Caltrans® ELECTRICAL DESIGN
FUNCTIONAL SUPERVISOR: SHAHRAM SHAHRIARI
CALCULATED-DESIGNED BY: JOANNE VO
CHECKED BY: SHAHRAM SHAHRIARI
REVISED BY / DATE REVISED

LAST REVISION 10-13-10
DATE PLOTTED => 17-DEC-2010
TIME PLOTTED => 09:54

Dist	COUNTY	LOCATION CODE	POST MILES TOTAL PROJECT	SHEET No.	TOTAL SHEETS
12	Ora	91	9.1/15.1	638	949

REGISTERED ELECTRICAL ENGINEER 10-21-10 DATE

10-25-10
PLANS APPROVAL DATE

REGISTERED PROFESSIONAL ENGINEER JOANNE VO No. E 16748 Exp. 9/30/12 ELECTRICAL STATE OF CALIFORNIA

THE STATE OF CALIFORNIA OR ITS OFFICERS OR AGENTS SHALL NOT BE RESPONSIBLE FOR THE ACCURACY OR COMPLETENESS OF SCANNED COPIES OF THIS PLAN SHEET.

FOR ACCURATE RIGHT OF WAY AND ACCESS DATA,
CONTACT RIGHT OF WAY ENGINEERING AT THE DISTRICT OFFICE.

NOTES: (THIS SHEET ONLY)

1. RELOCATE EXISTING STEP DOWN TRANSFORMER CABINET AND ITS EQUIPMENT. SEE DETAIL B ON SHEET E-55.
2. INSTALL RELOCATED EXISTING CCTV ON TOP OF SIGN POLE BY NEW POLE EXTENSION TYPE CCTV 10 AT "A" LINE Sta 85+10. MOUNT RELOCATED CCTV CONTROLLER ASSEMBLY, NEMA 4R ENCLOSURE AND ITS EQUIPMENT TO SIGN POLE. SEE DETAIL, SHEET E-54.
3. SEE SHEETS E-57, E-58 AND E-59 FOR SPLICING SCHEDULE AND ELEMENT SCHEMATIC.
4. PULL BOX COVERS SHALL BE MARKED AS "OCTA".
5. FOR GENERAL NOTES, LEGEND, AND ABBREVIATIONS, SEE SHEETS E-1, E-2 AND E-61.
6. RELOCATE EXISTING OCTA LOOP CONTROLLER ASSEMBLY IN MODEL 303 ENCLOSURE. SEE DETAIL A IN SHEET E-55 FOR FOUNDATION.

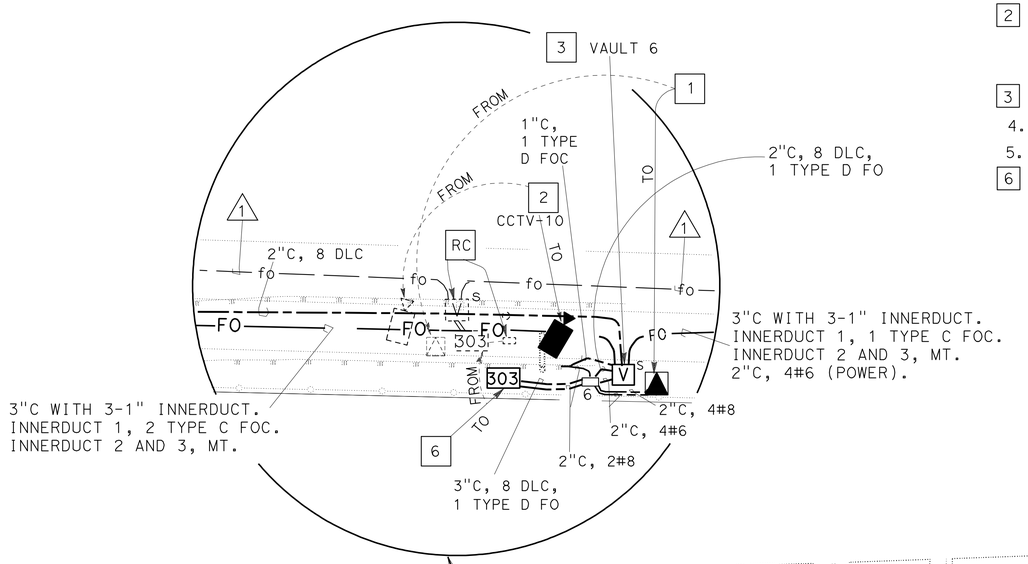

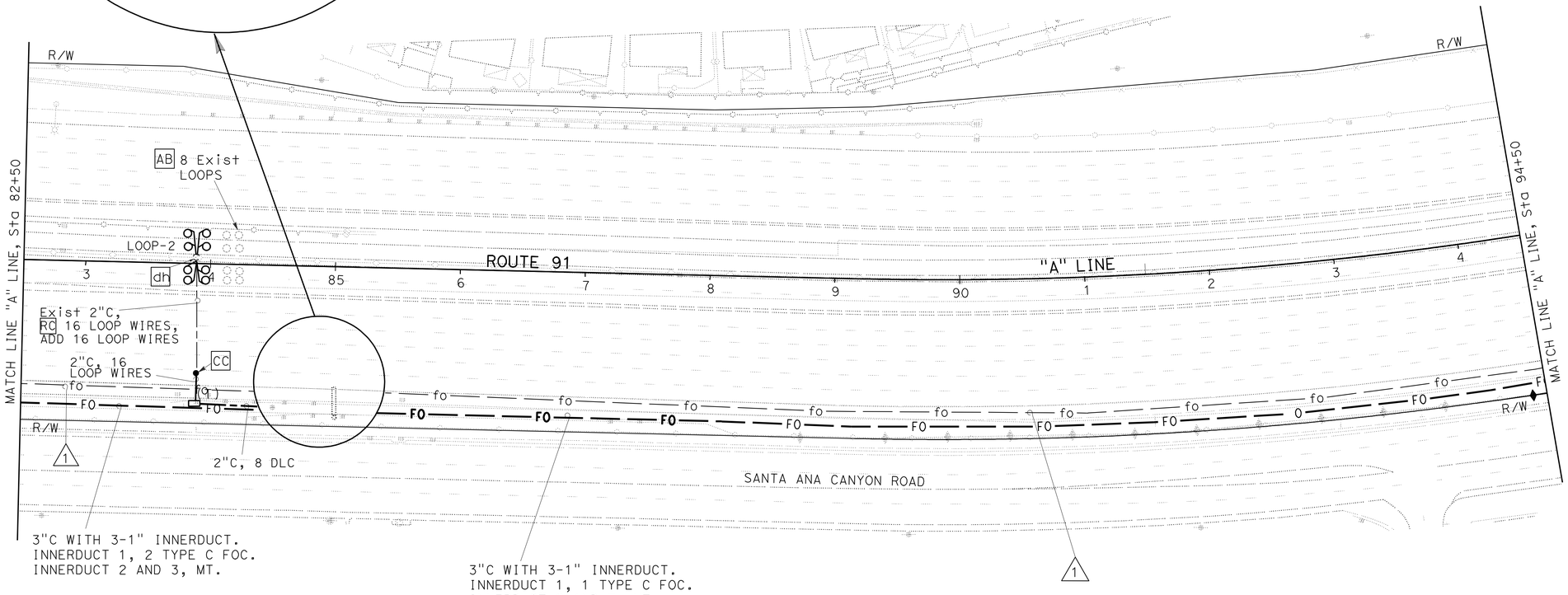

CONDUCTOR AND CONDUIT SCHEDULE

CONDUCTOR TYPE	1
EXISTING OCTA FOC	1 (R)
TYPE C CABLE(STATE)	1 (R)
CONDUIT SIZE	3", 4"(R)

(R): RC EXISTING CONDUIT OR CONDUCTOR

OCTA FACILITY

SCALE: 1" = 50'

E-63

THIS PLAN IS ACCURATE FOR ELECTRICAL WORK ONLY.

STATE OF CALIFORNIA - DEPARTMENT OF TRANSPORTATION
Caltrans® ELECTRICAL DESIGN

FUNCTIONAL SUPERVISOR: SHAHRAM SHAHRIARI
CALCULATED-DESIGNED BY: JOANNE VO
CHECKED BY: SHAHRAM SHAHRIARI
REVISED BY / DATE REVISED

LAST REVISION 10-13-10
DATE PLOTTED => 17-DEC-2010
TIME PLOTTED => 09:54

FOR ACCURATE RIGHT OF WAY AND ACCESS DATA,
CONTACT RIGHT OF WAY ENGINEERING AT THE DISTRICT OFFICE.

NOTES: (THIS SHEET ONLY)

1. SEE SHEET E-58 AND E-59 FOR SPLICING SCHEDULE AND ELEMENT SCHEMATIC.
2. INSTALL RELOCATED EXISTING CCTV ASSEMBLY ON TOP OF SIGN POLE AT "A" LINE, Sta 95+80 BY NEW POLE EXTENSION TYPE CCTV 10. MOUNT CCTV CONTROLLER ASSEMBLY, NEMA 4R ENCLOSURE AND ITS EQUIPMENT TO SIGN POLE. SEE DETAIL, SHEET E-54.
3. RELOCATE EXISTING STEP DOWN TRANSFORMER CABINET AND ITS EQUIPMENT. SEE DETAIL B, SHEET E-55 FOR TRANSFORMER FOUNDATION.
4. RELOCATE EXISTING OCTA LOOP CONTROLLER ASSEMBLY IN MODEL 303 ENCLOSURE. SEE DETAIL A IN SHEET E-55 FOR FOUNDATION.
5. FOR GENERAL NOTES, LEGEND, AND ABBREVIATIONS, SEE SHEET E-1, E-2 AND E-61.
6. SEE SHEET E-94 FOR STATE FO CABLE REFERENCE.
7. PULL BOX COVERS SHALL BE MARKED AS "OCTA".

Dist	COUNTY	LOCATION CODE	POST MILES TOTAL PROJECT	SHEET No.	TOTAL SHEETS
12	Ora	91	9.1/15.1	639	949

REGISTERED ELECTRICAL ENGINEER 10-29-10 DATE

11-8-10
PLANS APPROVAL DATE

REGISTERED PROFESSIONAL ENGINEER JOANNE VO No. E 16748 Exp. 9/30/12 ELECTRICAL STATE OF CALIFORNIA

THE STATE OF CALIFORNIA OR ITS OFFICERS OR AGENTS SHALL NOT BE RESPONSIBLE FOR THE ACCURACY OR COMPLETENESS OF SCANNED COPIES OF THIS PLAN SHEET.

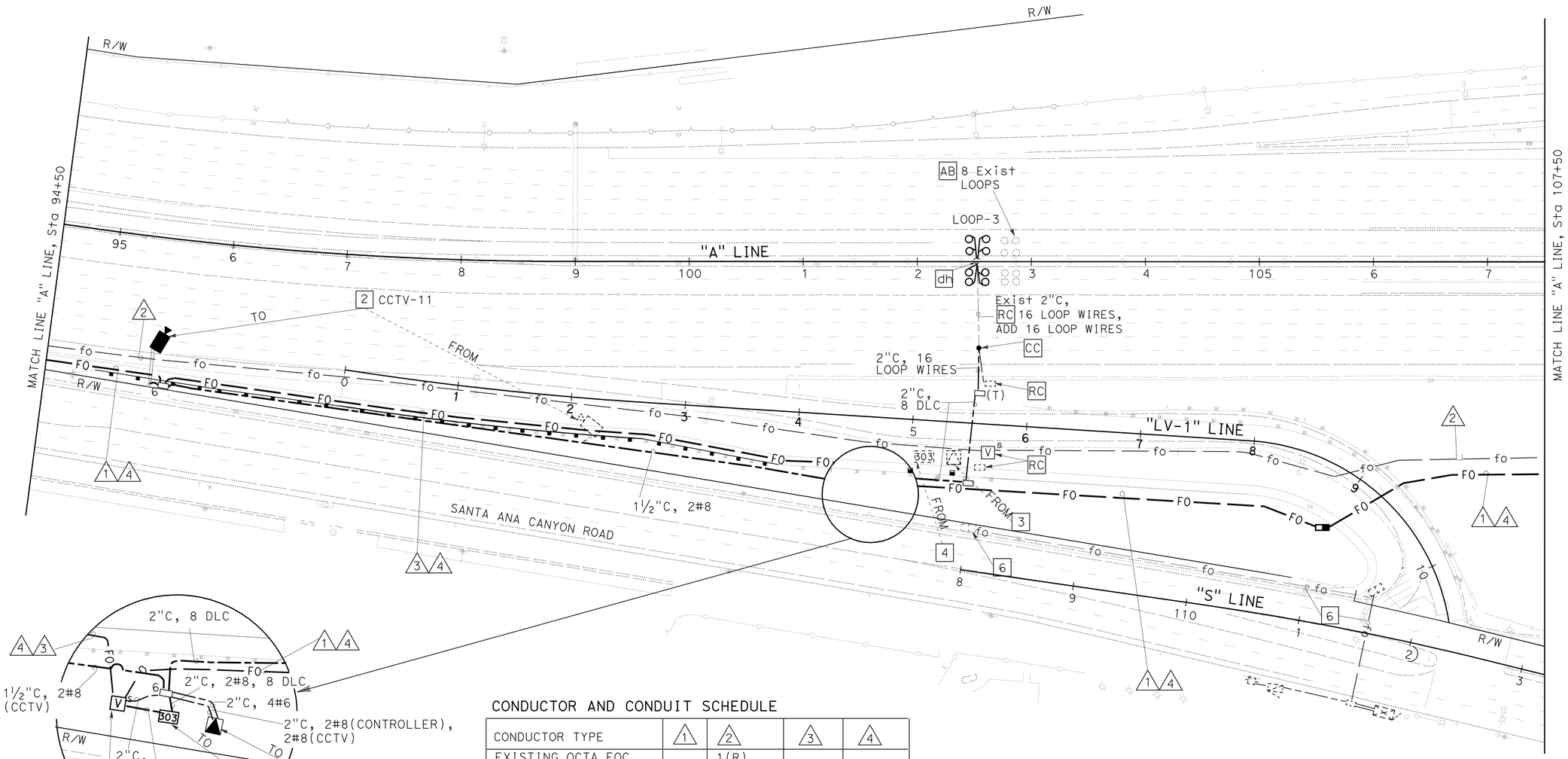

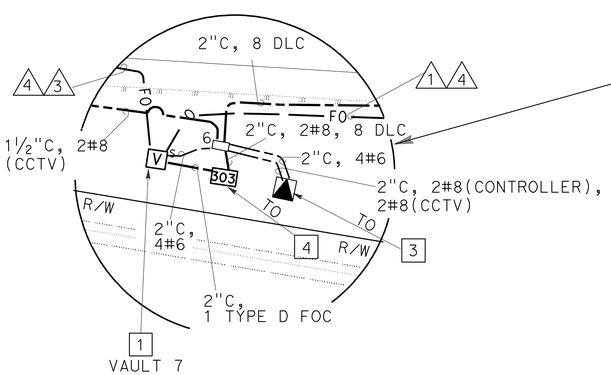

CONDUCTOR AND CONDUIT SCHEDULE

CONDUCTOR TYPE	1	2	3	4
EXISTING OCTA FOC		1(R)		
TYPE C CABLE (OCTA)	1(N)		1(N)	
TYPE C CABLE (STATE)	-	1(R)		
4#6 POWER CABLE		1(R)		1(N)
TYPE D CABLE (OCTA)			1(N)	
CONDUIT SIZE	3"(N)	3", 4"(R)	3"(N)	2"(N)

(R): RC EXISTING CONDUIT OR CONDUCTOR
(N): NEW CONDUIT OR CONDUCTOR

OCTA FACILITY

SCALE: 1" = 50'

E-64

THIS PLAN IS ACCURATE FOR ELECTRICAL WORK ONLY.

STATE OF CALIFORNIA - DEPARTMENT OF TRANSPORTATION
Caltrans® ELECTRICAL DESIGN

FUNCTIONAL SUPERVISOR: SHAHRAM SHAHRIARI
CALCULATED-DESIGNED BY: JOANNE VO
CHECKED BY: SHAHRAM SHAHRIARI
REVISED BY
DATE REVISED

LAST REVISION 10-13-10
DATE PLOTTED => 16-DEC-2010
TIME PLOTTED => 17:15

Dist	COUNTY	LOCATION CODE	POST MILES TOTAL PROJECT	SHEET No.	TOTAL SHEETS
12	Ora	91	9.1/15.1	640	949

REGISTERED ELECTRICAL ENGINEER 11-23-10 DATE

11-8-10
PLANS APPROVAL DATE

REGISTERED PROFESSIONAL ENGINEER JOANNE VO No. E 16748 Exp. 9/30/12 ELECTRICAL STATE OF CALIFORNIA

THE STATE OF CALIFORNIA OR ITS OFFICERS OR AGENTS SHALL NOT BE RESPONSIBLE FOR THE ACCURACY OR COMPLETENESS OF SCANNED COPIES OF THIS PLAN SHEET.

FOR ACCURATE RIGHT OF WAY AND ACCESS DATA,
CONTACT RIGHT OF WAY ENGINEERING AT THE DISTRICT OFFICE.

NOTES: (THIS SHEET ONLY)

1. SEE SHEET E-58 AND E-59 FOR FO SPLICING SCHEDULE AND ELEMENT SCHEMATIC.
2. Exist 480 V, 3Ø, 4W TYPE III-BF METERED SERVICE EQUIPMENT ENCLOSURE. ADDRESS: 106 N LAKEVIEW Ave.
   3P, 480 V, 100 A, CB FOR MAIN.
   3P, 480 V, 20 A, CB FOR SUBPANEL.
3. SEE SHEET E-95 FOR STATE FO REFERENCE.
4. FOR GENERAL NOTES, LEGEND, AND ABBREVIATIONS, SEE SHEET E-1, E-2 AND E-61.
5. RELOCATE EXISTING CCTV ASSEMBLY, NEMA 4R ENCLOSURE AND ITS EQUIPMENT TO NEW POLE TYPE CCTV 35 AT "A" LINE, Sta 112+95 (SEE DETAIL IN SHEET E-54). CONNECT CCTV TO FOC AFTER SWITCHING FROM TEMPORARY FOC OVER TO PERMANENT FOC.
6. Exist 2"C, REMOVE 1 EXISTING TYPE D foc. ADD 1 TYPE D FOC.

CONDUCTOR AND CONDUIT SCHEDULE

CONDUCTOR TYPE	1	2 (*)	3	4	5	6
EXISTING OCTA FOC	1(R)			1(R)	2(R)	
TYPE C CABLE (OCTA)	1(N)	-	1(N)		1(N)	
TYPE D CABLE (OCTA)					1(N)	
TYPE C CABLE (STATE)	-	1(E)	-	1(R)	-	-
4#6 POWER CABLE	1(E)	-		1(R)	1(E)	1(N)
CONDUIT SIZE	3"(E)	4"(E)	3"(N)	3", 4"(R)	3"(E)	2"(N)

(R): RC EXISTING CONDUIT OR CONDUCTOR
(N): NEW CONDUIT OR CONDUCTOR
(E): EXISTING CONDUIT OR CONDUCTOR
(*): SEE REFERENCE IN SHEET E-95

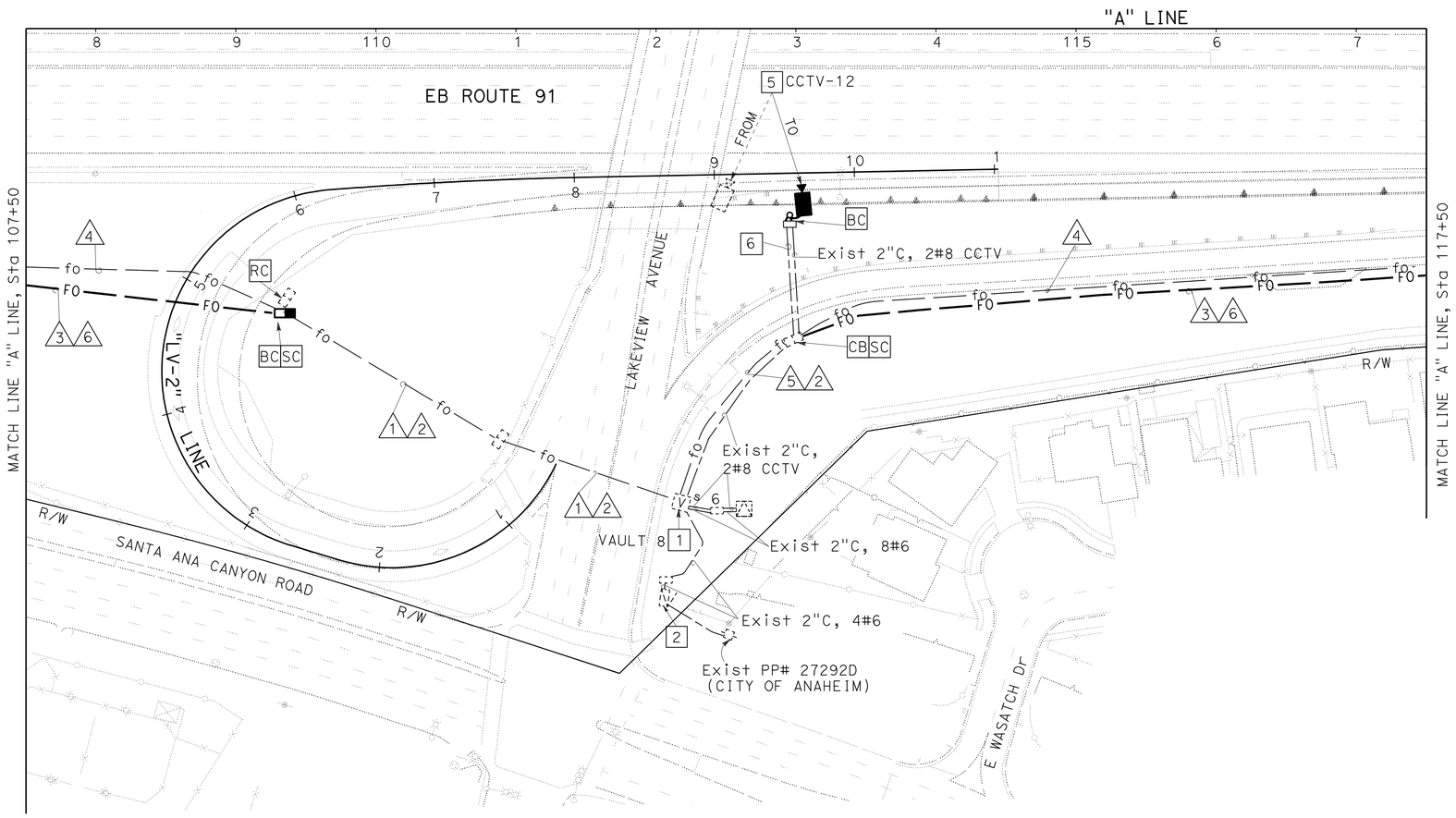

OCTA FACILITY

SCALE: 1" = 50'

E-65

THIS PLAN IS ACCURATE FOR ELECTRICAL WORK ONLY.

STATE OF CALIFORNIA - DEPARTMENT OF TRANSPORTATION
Caltrans ELECTRICAL DESIGN
FUNCTIONAL SUPERVISOR: SHAHRAM SHAHRIARI
CALCULATED-DESIGNED BY: JOANNE VO
CHECKED BY: SHAHRAM SHAHRIARI
REVISED BY / DATE REVISED

LAST REVISION 10-13-10
DATE PLOTTED => 16-DEC-2010
TIME PLOTTED => 17:15

DIST	COUNTY	ROUTE	POST MILE TOTAL PROJECT	SHEET No	TOTAL SHEETS
12	Ora	91	9.1/15.1	641	949

REGISTERED ELECTRICAL ENGINEER — DATE 10-29-10

11-8-10
PLANS APPROVAL DATE

REGISTERED PROFESSIONAL ENGINEER — JOANNE VO No. E 16748 Exp. 9/30/12 ELECTRICAL — STATE OF CALIFORNIA

The State of California or its officers or agents shall not be responsible for the accuracy or completeness of electronic copies of this plan sheet.

FOR ACCURATE RIGHT OF WAY AND ACCESS DATA,
CONTACT RIGHT OF WAY ENGINEERING AT THE DISTRICT OFFICE.

CONDUCTOR AND CONDUIT SCHEDULE

CONDUCTOR TYPE	1	2	3
TYPE C CABLE (OCTA)	1(N)		
TYPE C CABLE (STATE)	-	1(R)	-
4#6 POWER CABLE		1(R)	1(N)
EXISTING OCTA FOC		1(R)	
CONDUIT SIZE	3"(N)	3", 4"(R)	2"(N)

(R): RC EXISTING CONDUIT OR CONDUCTOR
(N): NEW CONDUIT OR CONDUCTOR
(E): EXISTING CONDUIT OR CONDUCTOR

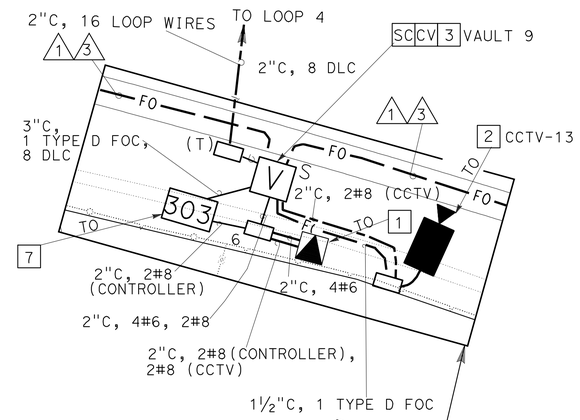

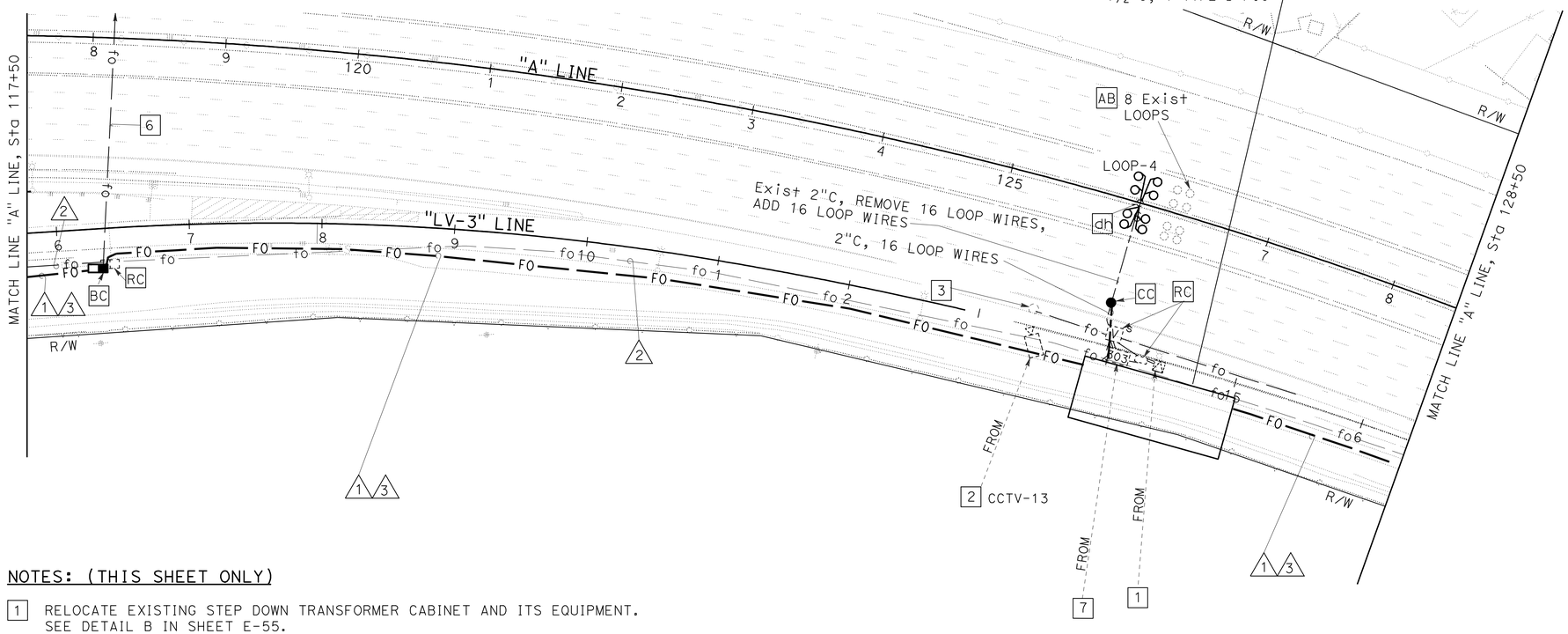

NOTES: (THIS SHEET ONLY)

1. RELOCATE EXISTING STEP DOWN TRANSFORMER CABINET AND ITS EQUIPMENT. SEE DETAIL B IN SHEET E-55.
2. RELOCATE EXISTING CCTV ASSEMBLY, NEMA 4R ENCLOSURE AND ITS EQUIPMENT TO NEW POLE TYPE CCTV 35 AT "A" LINE, Sta 127+00 (SEE DETAIL IN SHEET E-54). CONNECT CCTV TO FOC AFTER SWITCHING FROM TEMPORARY FOC OVER TO PERMANENT FOC.
3. SEE SHEET E-58 AND E-59 FOR SPLICING SCHEDULE AND ELEMENT SCHEMATIC.
4. FOR GENERAL NOTES, LEGEND, AND ABBREVIATIONS, SEE SHEET E-1, E-2 AND E-61.
5. NEW PULL BOX COVERS SHALL BE MARKED AS "OCTA".
6. SEE SHEET E-96 FOR REFERENCE.
7. RELOCATE EXISTING OCTA LOOP CONTROLLER ASSEMBLY IN MODEL 303 ENCLOSURE. SEE DETAIL A IN SHEET E-55 FOR FOUNDATION.

OCTA FACILITY

SCALE: 1" = 50'

E-66

THIS PLAN IS ACCURATE FOR ELECTRICAL WORK ONLY.

REVISED BY	DATE REVISED
JOANNE VO	SHAHRAM SHAHRIARI
CALCULATED/DESIGNED BY	CHECKED BY
PROJECT ENGINEER	SHAHRAM SHAHRIARI

STATE OF CALIFORNIA - DEPARTMENT OF TRANSPORTATION
Caltrans
ELECTRICAL DESIGN

LAST REVISION 07-01-10 | DATE PLOTTED => 16-DEC-2010 | TIME PLOTTED => 17:15

Dist	COUNTY	LOCATION CODE	POST MILES TOTAL PROJECT	SHEET No.	TOTAL SHEETS
12	Ora	91	9.1/15.1	642	949

REGISTERED ELECTRICAL ENGINEER DATE 10-21-10

PLANS APPROVAL DATE 11-8-10

REGISTERED PROFESSIONAL ENGINEER JOANNE VO No. E 16748 Exp. 9/30/12 ELECTRICAL STATE OF CALIFORNIA

THE STATE OF CALIFORNIA OR ITS OFFICERS OR AGENTS SHALL NOT BE RESPONSIBLE FOR THE ACCURACY OR COMPLETENESS OF SCANNED COPIES OF THIS PLAN SHEET.

FOR ACCURATE RIGHT OF WAY AND ACCESS DATA,
CONTACT RIGHT OF WAY ENGINEERING AT THE DISTRICT OFFICE.

CONDUCTOR AND CONDUIT SCHEDULE

CONDUCTOR TYPE	1	2	3
TYPE C CABLE (OCTA)	1(N)		
TYPE C CABLE (STATE)	-	1(R)	
4#6 POWER CABLE		1(R)	1(N)
EXISTING OCTA FOC		1(R)	
CONDUIT SIZE	3"(N)	3", 4"(R)	2"(N)

(R): RC EXISTING CONDUIT OR CONDUCTOR
(N): NEW CONDUIT OR CONDUCTOR

NOTES: (THIS SHEET ONLY)

1. RELOCATE EXISTING STEP DOWN TRANSFORMER CABINET AND ITS EQUIPMENT. SEE DETAIL B IN SHEET E-55.
2. INSTALL RELOCATED EXISTING CCTV ON TOP OF SIGN POLE BY NEW POLE EXTENSION TYPE CCTV 10. MOUNT RELOCATED CCTV CONTROLLER ASSEMBLY, NEMA 4R ENCLOSURE AND ITS EQUIPMENT TO SIGN POLE. SEE DETAIL, SHEET E-54.
3. SEE SHEET E-58 AND E-59 FOR SPLICING SCHEDULE AND ELEMENT SCHEMATIC.
4. FOR GENERAL NOTES, LEGEND, AND ABBREVIATIONS, SEE SHEET E-1, E-2 AND E-61.
5. PULL BOX COVERS SHALL BE MARKED AS "OCTA".

THIS PLAN IS ACCURATE FOR ELECTRICAL WORK ONLY.

OCTA FACILITY

SCALE: 1" = 50'

E-67

STATE OF CALIFORNIA - DEPARTMENT OF TRANSPORTATION
Caltrans ELECTRICAL DESIGN

FUNCTIONAL SUPERVISOR: SHAHRAM SHAHRIARI
CALCULATED-DESIGNED BY: JOANNE VO
CHECKED BY: SHAHRAM SHAHRIARI
REVISED BY
DATE REVISED

LAST REVISION DATE PLOTTED => 16-DEC-2010
10-13-10 TIME PLOTTED => 17:15

Dist	COUNTY	LOCATION CODE	POST MILES TOTAL PROJECT	SHEET No.	TOTAL SHEETS
12	Ora	91	9.1/15.1	643	949

10-29-10
REGISTERED ELECTRICAL ENGINEER DATE

10-25-10
PLANS APPROVAL DATE

REGISTERED PROFESSIONAL ENGINEER JOANNE VO No. E 16748 Exp. 9/30/12 ELECTRICAL STATE OF CALIFORNIA

THE STATE OF CALIFORNIA OR ITS OFFICERS OR AGENTS SHALL NOT BE RESPONSIBLE FOR THE ACCURACY OR COMPLETENESS OF SCANNED COPIES OF THIS PLAN SHEET.

FOR ACCURATE RIGHT OF WAY AND ACCESS DATA,
CONTACT RIGHT OF WAY ENGINEERING AT THE DISTRICT OFFICE.

CONDUCTOR AND CONDUIT SCHEDULE

CONDUCTOR TYPE	1	2	3
TYPE C CABLE (OCTA)	1(N)		
TYPE C CABLE (STATE)	-	1(R)	-
4#6 POWER CABLE		1(R)	1(N)
EXISTING OCTA FOC		1(R)	
CONDUIT SIZE	3"(N)	3", 4"(R)	2"(N)

(R): RC EXISTING CONDUIT OR CONDUCTOR
(N): NEW CONDUIT OR CONDUCTOR

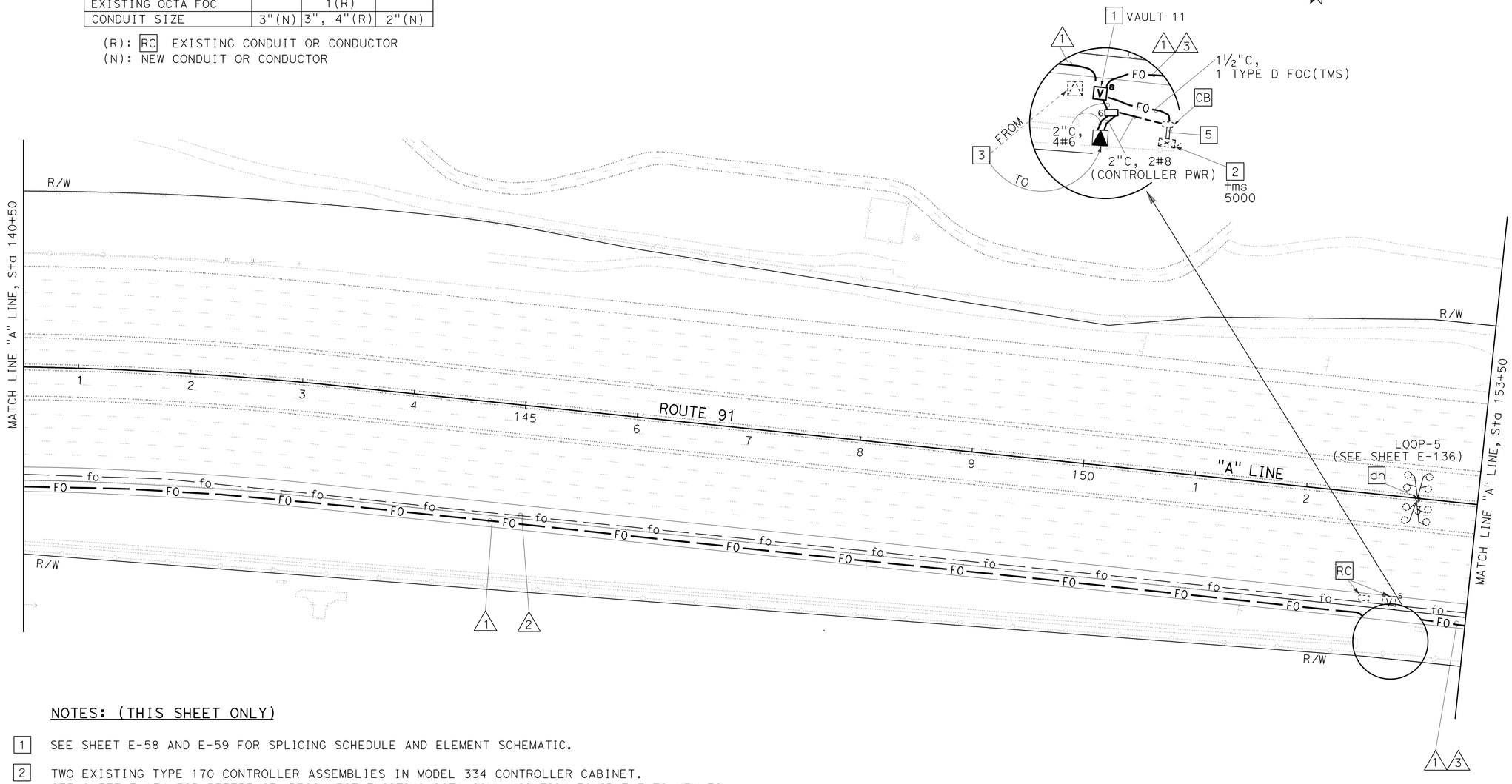

NOTES: (THIS SHEET ONLY)

1. SEE SHEET E-58 AND E-59 FOR SPLICING SCHEDULE AND ELEMENT SCHEMATIC.
2. TWO EXISTING TYPE 170 CONTROLLER ASSEMBLIES IN MODEL 334 CONTROLLER CABINET. SEE SHEET E-134 FOR REFERENCE. RECONNECT EXISTING OCTA COMMUNICATION EQUIPMENT TO NEW FO.
3. RELOCATE EXISTING STEP DOWN TRANSFORMER CABINET AND ITS EQUIPMENT. SEE DETAIL B IN SHEET E-55.
4. FOR GENERAL NOTES, LEGEND, AND ABBREVIATIONS, SEE SHEET E-1, E-2 AND E-61.
5. ADD 1 TYPE D FOC, 2#8 TO EXISTING CONDUIT. SEE SHEET E-134 FOR TMS REFERENCE.

OCTA FACILITY

SCALE: 1" = 50'

E-68

THIS PLAN IS ACCURATE FOR ELECTRICAL WORK ONLY.

STATE OF CALIFORNIA - DEPARTMENT OF TRANSPORTATION
Caltrans® ELECTRICAL DESIGN

FUNCTIONAL SUPERVISOR: SHAHRAM SHAHRIARI
CALCULATED-DESIGNED BY: JOANNE VO
CHECKED BY: SHAHRAM SHAHRIARI
REVISED BY
DATE REVISED

LAST REVISION 10-13-10
DATE PLOTTED => 16-DEC-2010
TIME PLOTTED => 17:15

Dist	COUNTY	LOCATION CODE	POST MILES TOTAL PROJECT	SHEET No.	TOTAL SHEETS
12	Ora	91	9.1/15.1	644	949

10-21-10
REGISTERED ELECTRICAL ENGINEER

10-25-10
PLANS APPROVAL DATE

REGISTERED PROFESSIONAL ENGINEER JOANNE VO No. E 16748 Exp. 9/30/12 ELECTRICAL STATE OF CALIFORNIA

THE STATE OF CALIFORNIA OR ITS OFFICERS OR AGENTS SHALL NOT BE RESPONSIBLE FOR THE ACCURACY OR COMPLETENESS OF SCANNED COPIES OF THIS PLAN SHEET.

FOR ACCURATE RIGHT OF WAY AND ACCESS DATA,
CONTACT RIGHT OF WAY ENGINEERING AT THE DISTRICT OFFICE.

NOTES: (THIS SHEET ONLY)

1. RELOCATE EXISTING STEP DOWN TRANSFORMER CABINET AND ITS EQUIPMENT. SEE DETAIL B IN SHEET E-55.
2. INSTALL RELOCATED EXISTING CCTV ON TOP OF SIGN POLE BY NEW POLE EXTENSION TYPE CCTV 10 AT "A" LINE, Sta 162+25. MOUNT RELOCATED CCTV CONTROLLER ASSEMBLY, NEMA 4R ENCLOSURE AND ITS EQUIPMENT TO SIGN POLE. SEE DETAIL IN SHEET E-54.
3. SEE SHEET E-58 AND E-59 FOR SPLICING SCHEDULE AND ELEMENT SCHEMATIC.
4. FOR GENERAL NOTES, LEGEND, AND ABBREVIATIONS, SEE SHEET E-1, E-2 AND E-61.

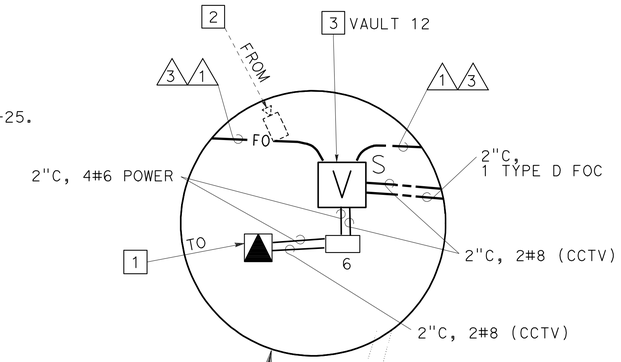

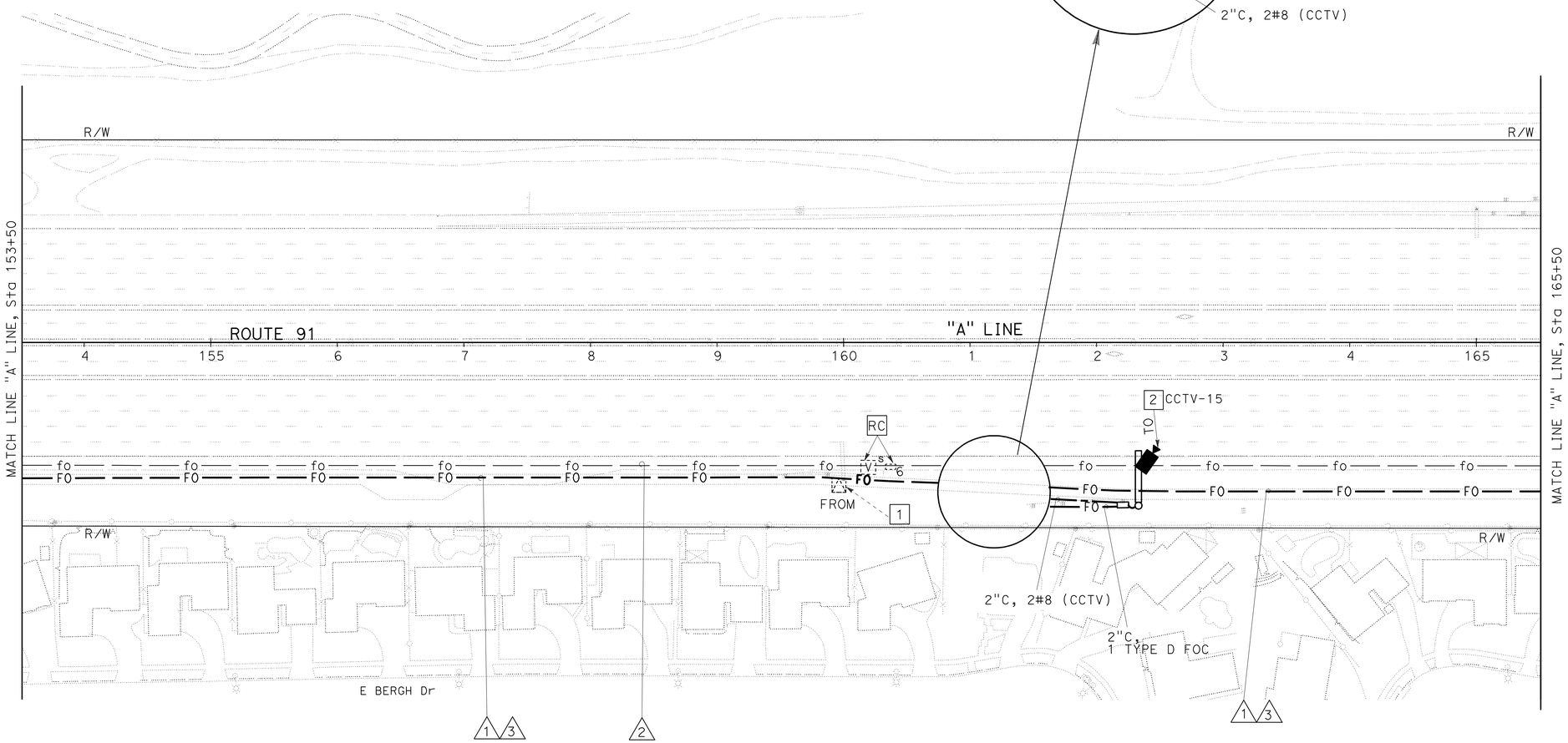

CONDUCTOR AND CONDUIT SCHEDULE

CONDUCTOR TYPE	1	2	3
TYPE C CABLE (OCTA)	1(N)		
TYPE C CABLE (STATE)	-	1(R)	-
4#6 POWER CABLE		1(R)	1(N)
EXISTING OCTA FOC		1(R)	
CONDUIT SIZE	3"(N)	3", 4"(R)	2"(N)

(R): RC EXISTING CONDUIT OR CONDUCTOR
(N): NEW CONDUIT OR CONDUCTOR

OCTA FACILITY

SCALE: 1" = 50'

E-69

THIS PLAN IS ACCURATE FOR ELECTRICAL WORK ONLY.

STATE OF CALIFORNIA - DEPARTMENT OF TRANSPORTATION
Caltrans ELECTRICAL DESIGN

FUNCTIONAL SUPERVISOR: SHAHRAM SHAHRIARI
CALCULATED-DESIGNED BY: JOANNE VO
CHECKED BY: SHAHRAM SHAHRIARI
REVISED BY
DATE REVISED

LAST REVISION 10-13-10 | DATE PLOTTED => 16-DEC-2010 | TIME PLOTTED => 17:15

Dist	COUNTY	LOCATION CODE	POST MILES TOTAL PROJECT	SHEET No.	TOTAL SHEETS
12	Ora	91	9.1/15.1	645	949

REGISTERED ELECTRICAL ENGINEER 10-21-10 DATE

10-25-10
PLANS APPROVAL DATE

REGISTERED PROFESSIONAL ENGINEER
JOANNE VO
No. E 16748
Exp. 9/30/12
ELECTRICAL
STATE OF CALIFORNIA

THE STATE OF CALIFORNIA OR ITS OFFICERS OR AGENTS SHALL NOT BE RESPONSIBLE FOR THE ACCURACY OR COMPLETENESS OF SCANNED COPIES OF THIS PLAN SHEET.

FOR ACCURATE RIGHT OF WAY AND ACCESS DATA,
CONTACT RIGHT OF WAY ENGINEERING AT THE DISTRICT OFFICE.

NOTES: (THIS SHEET ONLY)

1. PULL BOX COVERS SHALL BE MARKED AS "OCTA".
2. FOR GENERAL NOTES, LEGEND, AND ABBREVIATIONS, SEE SHEET E-1, E-2 AND E-61.

CONDUCTOR AND CONDUIT SCHEDULE

CONDUCTOR TYPE	1	2	3
TYPE C CABLE (OCTA)	1(N)		
TYPE C CABLE (STATE)	-	1(R)	-
4#6 POWER CABLE		1(R)	1(N)
EXISTING OCTA FOC		1(R)	
CONDUIT SIZE	3"(N)	3",4"(R)	2"(N)

(R): RC EXISTING CONDUIT OR CONDUCTOR
(N): NEW CONDUIT OR CONDUCTOR

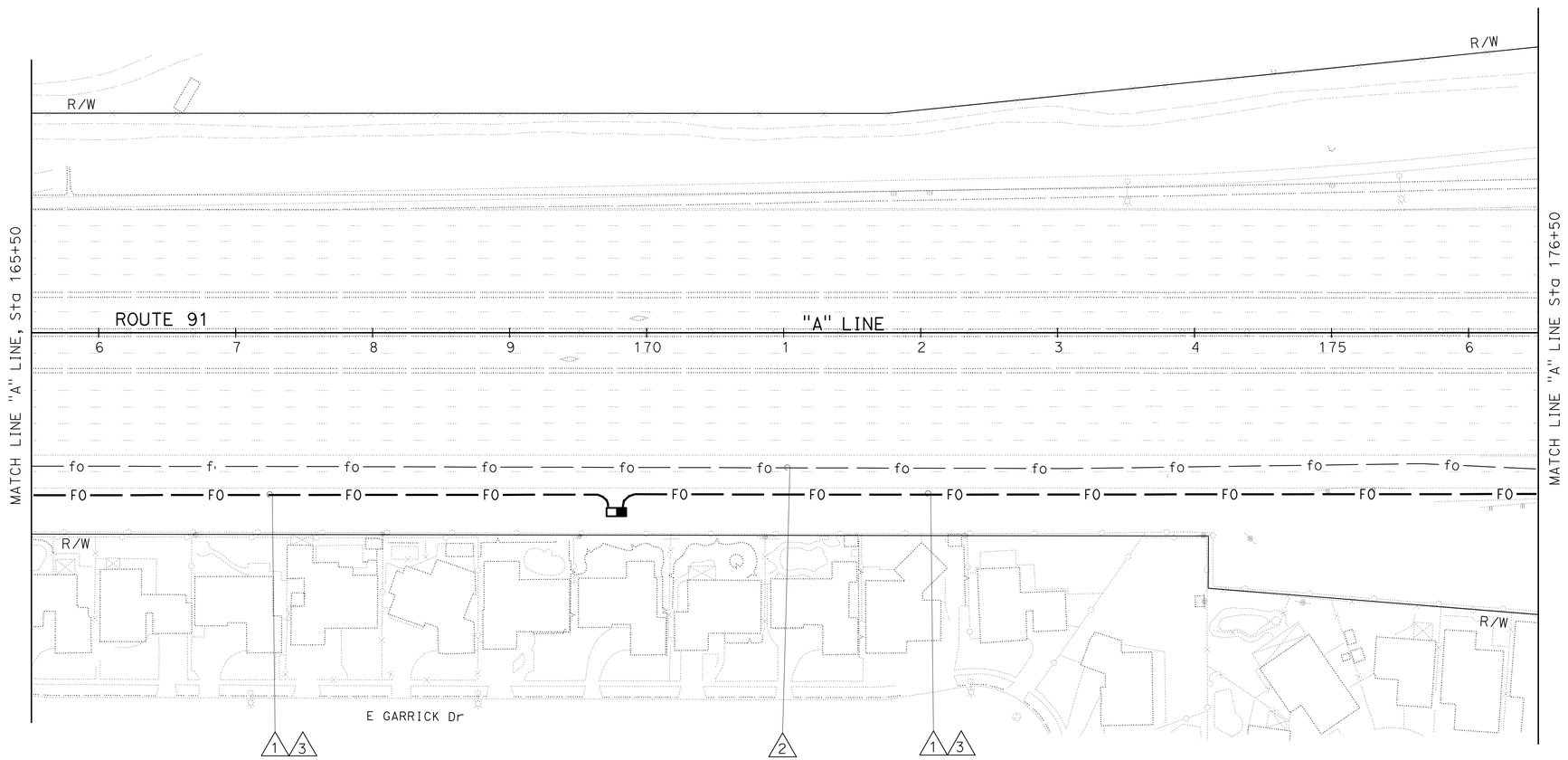

OCTA FACILITY

SCALE: 1" = 50'

E-70

THIS PLAN IS ACCURATE FOR ELECTRICAL WORK ONLY.

STATE OF CALIFORNIA - DEPARTMENT OF TRANSPORTATION
Caltrans® **ELECTRICAL DESIGN**

FUNCTIONAL SUPERVISOR: SHAHRAM SHAHRIARI
CALCULATED-DESIGNED BY: JOANNE VO
CHECKED BY: SHAHRAM SHAHRIARI
REVISED BY
DATE REVISED

LAST REVISION 10-13-10 | DATE PLOTTED => 16-DEC-2010 | TIME PLOTTED => 17:15

Dist	COUNTY	LOCATION CODE	POST MILES TOTAL PROJECT	SHEET No.	TOTAL SHEETS
12	Ora	91	9.1/15.1	646	949

REGISTERED ELECTRICAL ENGINEER 10-21-10 DATE

10-25-10
PLANS APPROVAL DATE

REGISTERED PROFESSIONAL ENGINEER JOANNE VO No. E 16748 Exp. 9/30/12 ELECTRICAL STATE OF CALIFORNIA

THE STATE OF CALIFORNIA OR ITS OFFICERS OR AGENTS SHALL NOT BE RESPONSIBLE FOR THE ACCURACY OR COMPLETENESS OF SCANNED COPIES OF THIS PLAN SHEET.

FOR ACCURATE RIGHT OF WAY AND ACCESS DATA,
CONTACT RIGHT OF WAY ENGINEERING AT THE DISTRICT OFFICE.

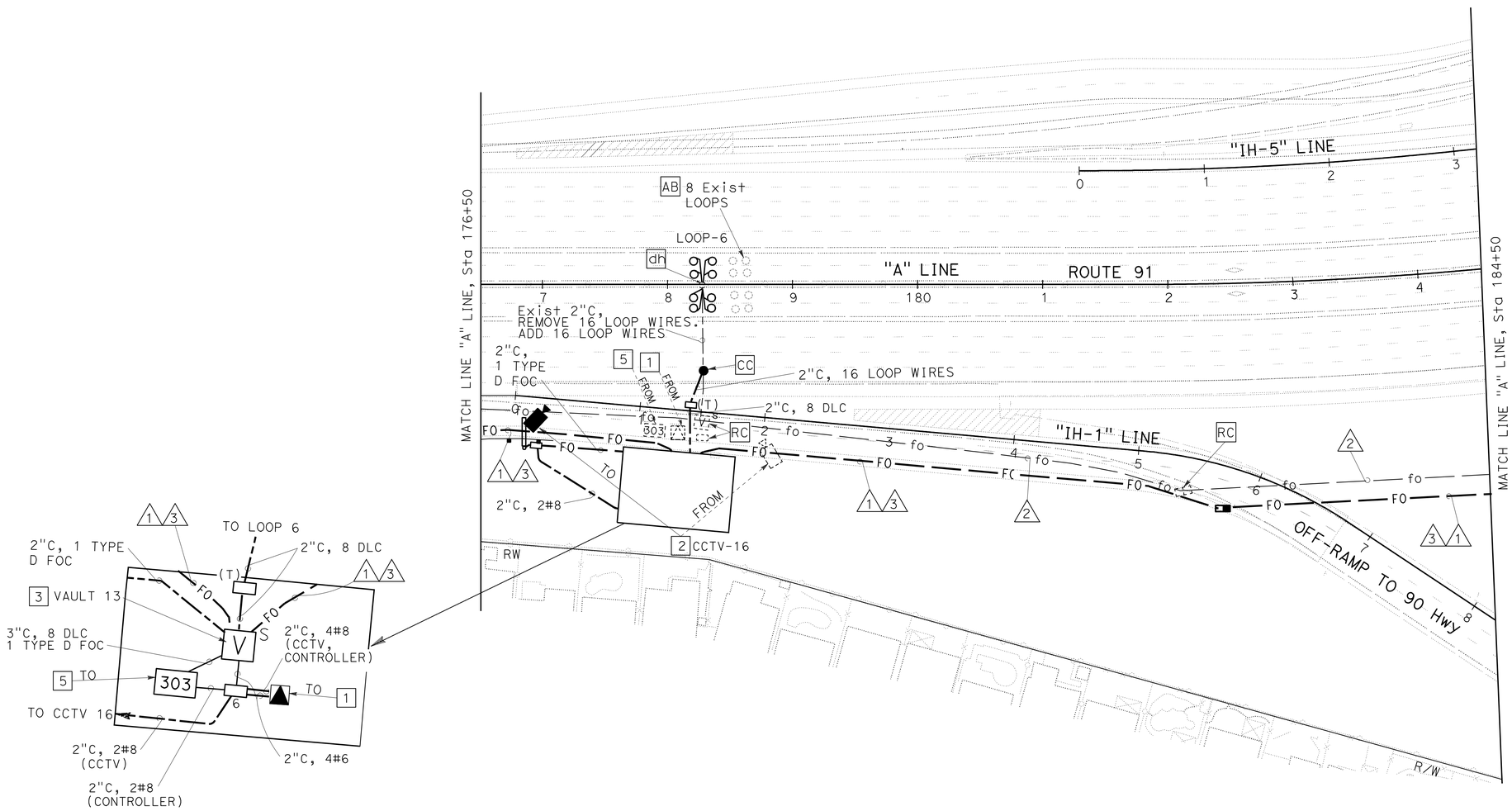

CONDUCTOR AND CONDUIT SCHEDULE

CONDUCTOR TYPE	1	2	3
TYPE C CABLE (OCTA)	1(N)		
TYPE C CABLE (STATE)	-	1(R)	-
4#6 POWER CABLE		1(R)	1(N)
EXISTING OCTA FOC		1(R)	
CONDUIT SIZE	3"(N)	3", 4"(R)	2"(N)

(R): RC EXISTING CONDUIT OR CONDUCTOR
(N): NEW CONDUIT OR CONDUCTOR

NOTES: (THIS SHEET ONLY)

1. RELOCATE EXISTING STEP DOWN TRANSFORMER CABINET AND ITS EQUIPMENT. SEE DETAIL B, SHEET E-55 FOR TRANSFORMER FOUNDATION.
2. INSTALL RELOCATED EXISTING CCTV ON TOP OF SIGN POLE BY NEW POLE EXTENSION TYPE CCTV 10 AT "A" LINE, Sta 176+85. MOUNT RELOCATED CCTV CONTROLLER ASSEMBLY, NEMA 4R ENCLOSURE AND ITS EQUIPMENT TO SIGN POLE. SEE DETAIL IN SHEET E-54.
3. SEE SHEETS E-58, E-59 AND E-60 FOR SPLICING SCHEDULE AND ELEMENT SCHEMATIC.
4. FOR NOTES, SYMBOLS, AND ABBREVIATIONS, SEE SHEETS E-1, E-2 AND E-61.
5. RELOCATE EXISTING OCTA LOOP CONTROLLER ASSEMBLY IN MODEL 303 ENCLOSURE. SEE DETAIL A IN SHEET E-55.

OCTA FACILITY

SCALE: 1" = 50'

E-71

THIS PLAN IS ACCURATE FOR ELECTRICAL WORK ONLY.

STATE OF CALIFORNIA - DEPARTMENT OF TRANSPORTATION
Caltrans ELECTRICAL DESIGN

CALCULATED-DESIGNED BY: JOANNE VO
CHECKED BY: SHAHRAM SHAHRIARI
FUNCTIONAL SUPERVISOR: SHAHRAM SHAHRIARI
REVISED BY
DATE REVISED

LAST REVISION 10-13-10 | DATE PLOTTED => 16-DEC-2010 | TIME PLOTTED => 17:15

Dist	COUNTY	LOCATION CODE	POST MILES TOTAL PROJECT	SHEET No.	TOTAL SHEETS
12	Ora	91	9.1/15.1	647	949

REGISTERED ELECTRICAL ENGINEER 10-21-10 DATE

10-25-10
PLANS APPROVAL DATE

REGISTERED PROFESSIONAL ENGINEER JOANNE VO No. E 16748 Exp. 9/30/12 ELECTRICAL STATE OF CALIFORNIA

THE STATE OF CALIFORNIA OR ITS OFFICERS OR AGENTS SHALL NOT BE RESPONSIBLE FOR THE ACCURACY OR COMPLETENESS OF SCANNED COPIES OF THIS PLAN SHEET.

FOR ACCURATE RIGHT OF WAY AND ACCESS DATA,
CONTACT RIGHT OF WAY ENGINEERING AT THE DISTRICT OFFICE.

NOTES: (THIS SHEET ONLY)

1. FOR GENERAL NOTES, LEGEND, AND ABBREVIATIONS, SEE SHEETS E-1, E-2 AND E-61.

2. SEE SHEET E-103 FOR CALTRANS FOC REFERENCE AND ELEMENT SCHEMATIC.

3. SEE SHEETS E-58, E-59 AND E-60 FOR FOC SPLICING SCHEDULE. SPLICE EXISTING 4#6 TO NEW 4#6.

4. Exist 480 V, 3Ø, 4W TYPE III-BF METERED SERVICE EQUIPMENT ENCLOSURE. ADDRESS: 290 N IMPERIAL Hwy.
3P, 480 V, 100 A, CB FOR MAIN.
3P, 480 V, 20 A, CB FOR SUBPANEL.

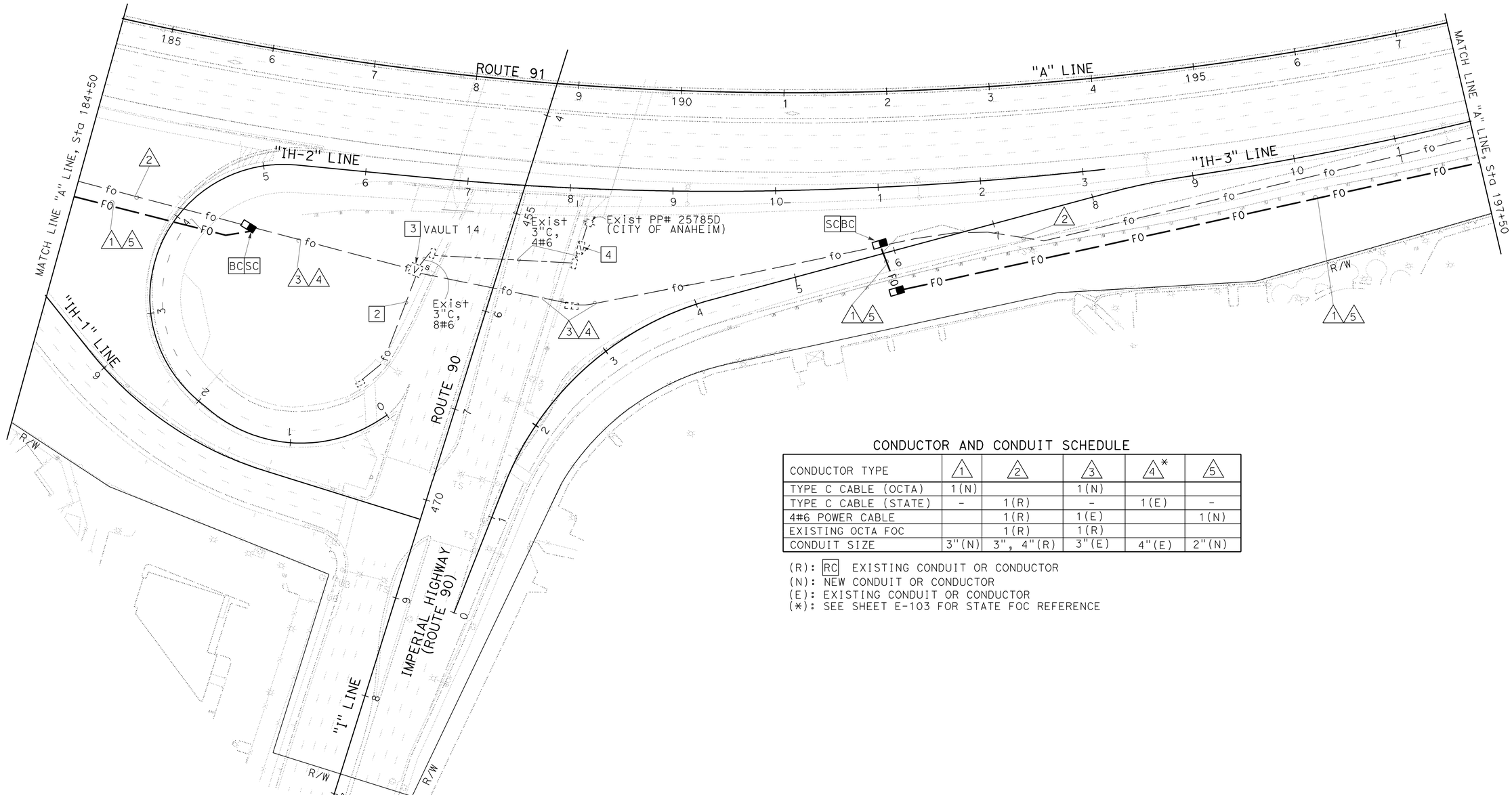

CONDUCTOR AND CONDUIT SCHEDULE

CONDUCTOR TYPE	1	2	3	4*	5
TYPE C CABLE (OCTA)	1(N)		1(N)		
TYPE C CABLE (STATE)	-	1(R)	-	1(E)	-
4#6 POWER CABLE		1(R)	1(E)		1(N)
EXISTING OCTA FOC		1(R)	1(R)		
CONDUIT SIZE	3"(N)	3", 4"(R)	3"(E)	4"(E)	2"(N)

(R): RC EXISTING CONDUIT OR CONDUCTOR
(N): NEW CONDUIT OR CONDUCTOR
(E): EXISTING CONDUIT OR CONDUCTOR
(*): SEE SHEET E-103 FOR STATE FOC REFERENCE

OCTA FACILITY

SCALE: 1" = 50'

E-72

THIS PLAN IS ACCURATE FOR ELECTRICAL WORK ONLY.

STATE OF CALIFORNIA - DEPARTMENT OF TRANSPORTATION
Caltrans® ELECTRICAL DESIGN

FUNCTIONAL SUPERVISOR: SHAHRAM SHAHRIARI
CALCULATED-DESIGNED BY: JOANNE VO
CHECKED BY: SHAHRAM SHAHRIARI
REVISED BY
DATE REVISED

LAST REVISION 10-13-10
DATE PLOTTED => 16-DEC-2010
TIME PLOTTED => 17:16

Dist	COUNTY	LOCATION CODE	POST MILES TOTAL PROJECT	SHEET No.	TOTAL SHEETS
12	Ora	91	9.1/15.1	648	949

REGISTERED ELECTRICAL ENGINEER 10-29-10 DATE

10-25-10
PLANS APPROVAL DATE

REGISTERED PROFESSIONAL ENGINEER JOANNE VO No. E 16748 Exp. 9/30/12 ELECTRICAL STATE OF CALIFORNIA

THE STATE OF CALIFORNIA OR ITS OFFICERS OR AGENTS SHALL NOT BE RESPONSIBLE FOR THE ACCURACY OR COMPLETENESS OF SCANNED COPIES OF THIS PLAN SHEET.

FOR ACCURATE RIGHT OF WAY AND ACCESS DATA,
CONTACT RIGHT OF WAY ENGINEERING AT THE DISTRICT OFFICE.

NOTES: (THIS SHEET ONLY)

1. RELOCATE EXISTING STEP DOWN TRANSFORMER CABINET AND ITS EQUIPMENT. SEE DETAIL B IN SHEET E-55 FOR FOUNDATION.
2. INSTALL RELOCATED EXISTING CCTV ON NEW POLE TYPE CCTV 35 TO BEHIND NEW MBGR AT "A" LINE, Sta 204+00. MOUNT RELOCATED EXISTING 4R NEMA BOX. SEE DETAIL IN SHEET E-54.
3. SEE SHEETS E-58, E-59 AND E-60 FOR FOC SPLICING SCHEDULE AND ELEMENT SCHEMATIC.
4. PULL BOX COVERS SHALL BE MARKED AS "OCTA".
5. FOR GENERAL NOTES, LEGEND, AND ABBREVIATIONS, SEE SHEETS E-1, E-2 AND E-61.
6. RELOCATE EXISTING OCTA LOOP CONTROLLER ASSEMBLY IN MODEL 303 ENCLOSURE. SEE DETAIL A IN SHEET E-55.
7. Exist 2"C, REMOVE 16 LOOP WIRES. INSTALL 16 LOOP WIRES.

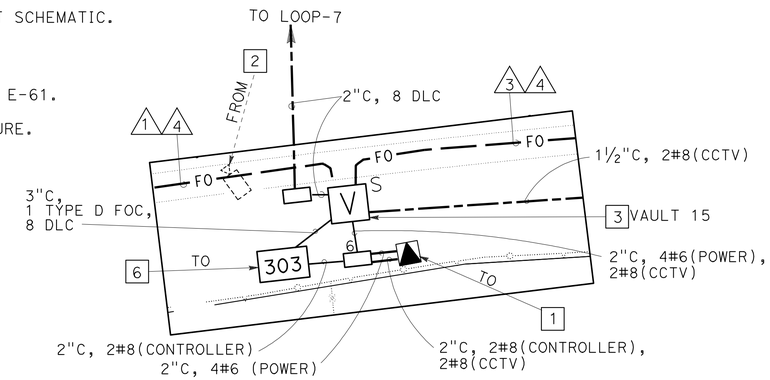

DETAIL A

CONDUCTOR AND CONDUIT SCHEDULE

CONDUCTOR TYPE	1	2	3	4
EXISTING OCTA FOC		1(R)		
TYPE C CABLE (OCTA)	1(N)		1(N)	
TYPE C CABLE (STATE)	-	1(R)	-	-
4#6 POWER CABLE		1(R)		1(N)
TYPE D CABLE (OCTA)			1(N)	
CONDUIT SIZE	3"(N)	3", 4"(R)	3"(N)	2"(N)

(R): RC EXISTING CONDUIT OR CONDUCTOR
(N): NEW CONDUIT OR CONDUCTOR

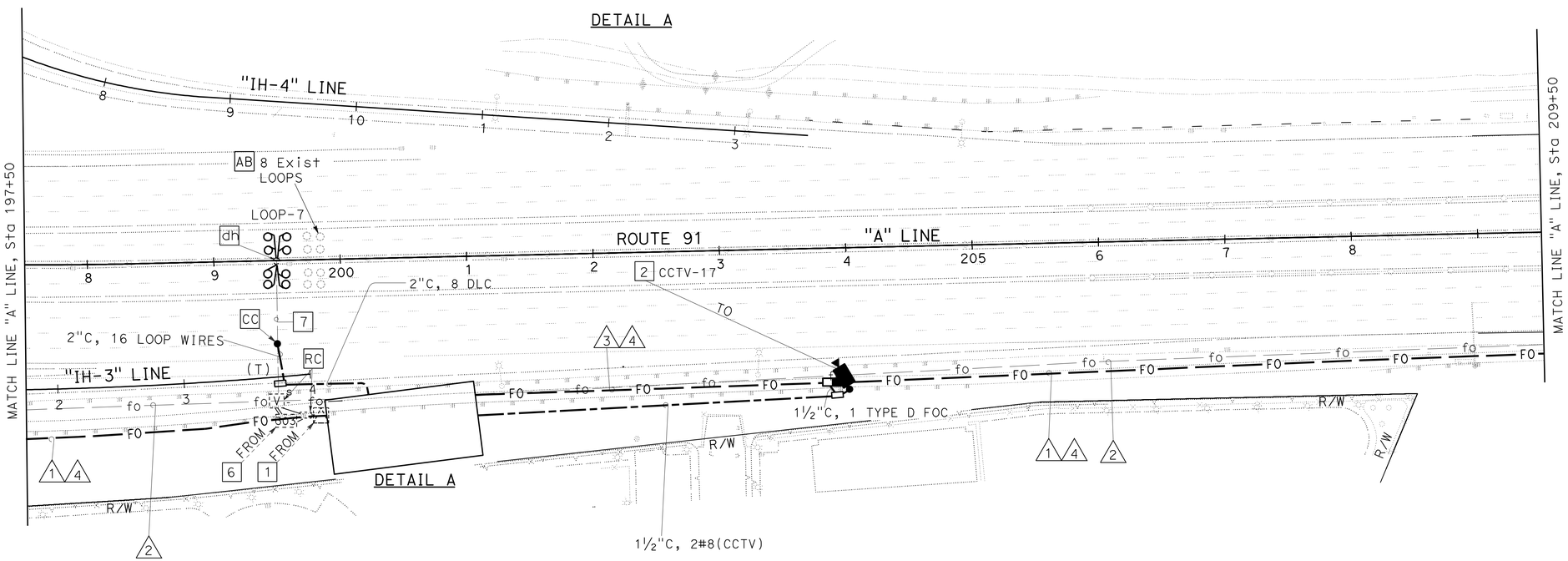

THIS PLAN IS ACCURATE FOR ELECTRICAL WORK ONLY.

OCTA FACILITY

SCALE: 1" = 50'

E-73

STATE OF CALIFORNIA - DEPARTMENT OF TRANSPORTATION
Caltrans ELECTRICAL DESIGN

FUNCTIONAL SUPERVISOR: SHAHRAM SHAHRIARI
CALCULATED-DESIGNED BY: JOANNE VO
CHECKED BY: SHAHRAM SHAHRIARI
REVISED BY
DATE REVISED

LAST REVISION 10-13-10
DATE PLOTTED => 16-DEC-2010
TIME PLOTTED => 17:16

DIST	COUNTY	ROUTE	POST MILE TOTAL PROJECT	SHEET No	TOTAL SHEETS
12	Ora	91	9.1/15.1	649	949

REGISTERED ELECTRICAL ENGINEER 08-12-10 DATE

PLANS APPROVAL DATE 10-25-10

REGISTERED PROFESSIONAL ENGINEER JOANNE VO No. E 16748 Exp. 9/30/12 ELECTRICAL STATE OF CALIFORNIA

The State of California or its officers or agents shall not be responsible for the accuracy or completeness of electronic copies of this plan sheet.

FOR ACCURATE RIGHT OF WAY AND ACCESS DATA, CONTACT RIGHT OF WAY ENGINEERING AT THE DISTRICT OFFICE.

NOTES: (THIS SHEET ONLY)

1. RELOCATE EXISTING STEP DOWN TRANSFORMER CABINET AND ITS EQUIPMENT. SEE DETAIL B, SHEET E-55 FOR TRANSFORMER FOUNDATION.
2. INSTALL RELOCATED EXISTING CCTV ON TOP OF SIGN POLE BY POLE EXTENSION TYPE CCTV 10. MOUNT RELOCATED CCTV CONTROLLER ASSEMBLY, NEMA 4R ENCLOSURE AND ITS EQUIPMENT TO SIGN POLE. SEE DETAIL, SHEET E-54.
3. SEE SHEETS E-58, E-59 AND E-60 FOR SPLICING FOC SCHEDULE AND ELEMENT SCHEMATIC.
4. FOR GENERAL NOTES, LEGEND, AND ABBREVIATIONS, SEE SHEETS E-1, E-2 AND E-61.
5. PULL BOX COVERS SHALL BE MARKED AS "OCTA".

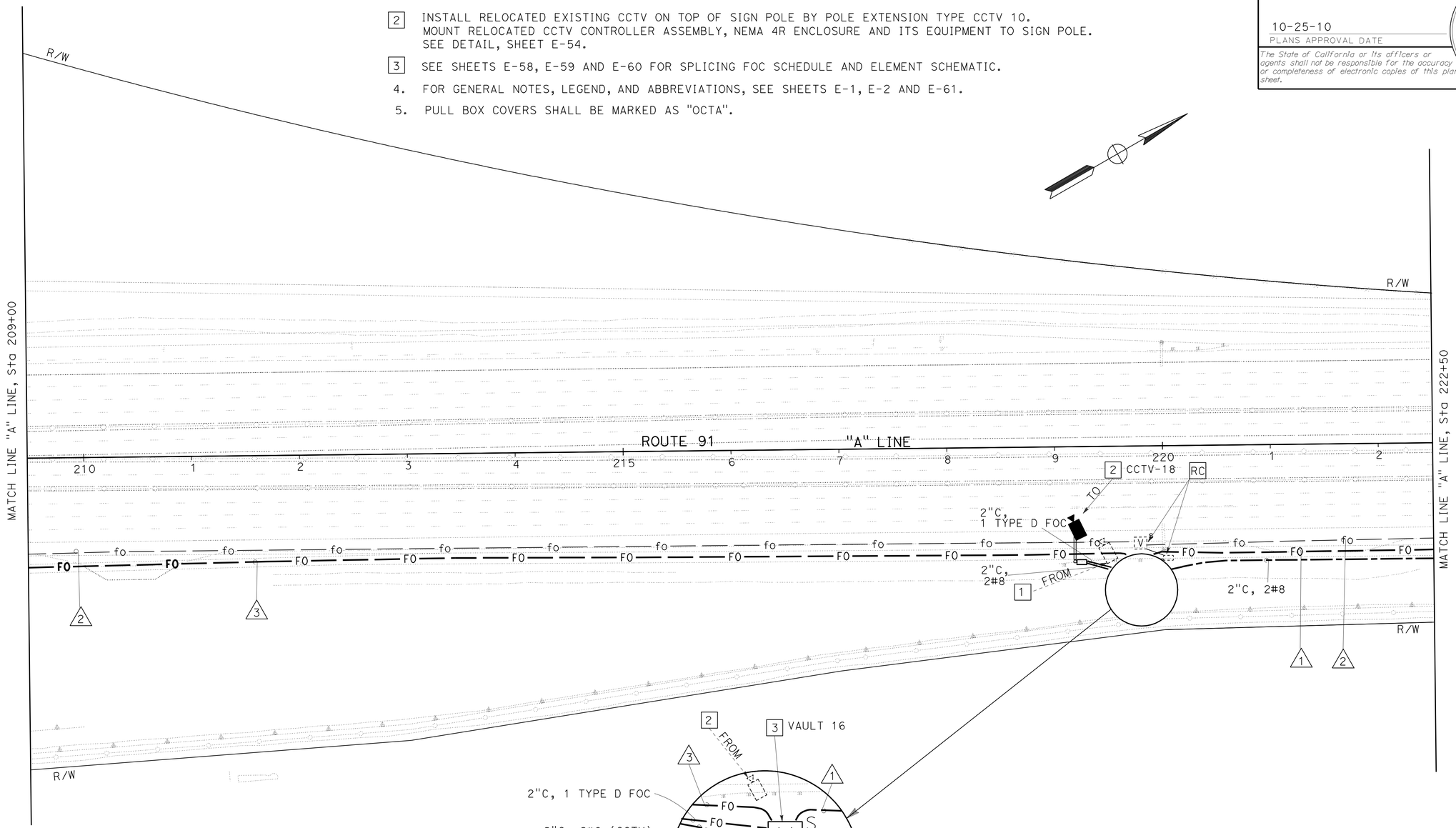

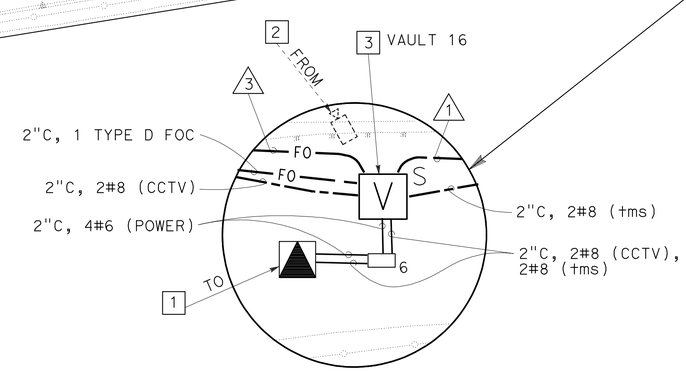

CONDUCTOR AND CONDUIT SCHEDULE

CONDUCTOR TYPE	1	2	3
EXISTING OCTA FOC		1(R)	
TYPE C CABLE (OCTA)	1(N)		1(N)
TYPE C CABLE (STATE)	-	1(R)	-
4#6 POWER CABLE	-	1(R)	1(N)
TYPE D CABLE (OCTA)	1(N)		-
CONDUIT SIZE	3"(N)	3", 4"(R)	3"(N)

(R): RC EXISTING CONDUIT OR CONDUCTOR
(N): NEW CONDUIT OR CONDUCTOR

OCTA FACILITY

SCALE: 1" = 50'

E-74

THIS PLAN IS ACCURATE FOR ELECTRICAL WORK ONLY.

STATE OF CALIFORNIA - DEPARTMENT OF TRANSPORTATION
Caltrans ELECTRICAL DESIGN

PROJECT ENGINEER SHAHRIARI
SHAHRAM SHAHRIARI

CALCULATED/DESIGNED BY JOANNE VO
CHECKED BY SHAHRAM SHAHRIARI

REVISED BY
DATE REVISED

LAST REVISION 07-15-10
DATE PLOTTED => 16-DEC-2010
TIME PLOTTED => 17:16

Dist	COUNTY	LOCATION CODE	POST MILES TOTAL PROJECT	SHEET No.	TOTAL SHEETS
12	Ora	91	9.1/15.1	650	949

10-29-10
REGISTERED ELECTRICAL ENGINEER DATE

10-25-10
PLANS APPROVAL DATE

REGISTERED PROFESSIONAL ENGINEER JOANNE VO No. E 16748 Exp. 9/30/12 ELECTRICAL STATE OF CALIFORNIA

THE STATE OF CALIFORNIA OR ITS OFFICERS OR AGENTS SHALL NOT BE RESPONSIBLE FOR THE ACCURACY OR COMPLETENESS OF SCANNED COPIES OF THIS PLAN SHEET.

FOR ACCURATE RIGHT OF WAY AND ACCESS DATA,
CONTACT RIGHT OF WAY ENGINEERING AT THE DISTRICT OFFICE.

CONDUCTOR AND CONDUIT SCHEDULE

CONDUCTOR TYPE	1	2	3	4	5
EXISTING OCTA FOC		1(R)			
TYPE C CABLE (OCTA)	1(N)		-	-	1(N)
TYPE C CABLE (STATE)	-	1(R)	-	-	-
TYPE D CABLE (OCTA)	1(N)	-		1(N)	-
2#8 POWER CABLE			1(N)	-	
CONDUIT SIZE	3"(N)	3", 4"(R)	2"(N)	2"(N)	3"(N)

(R): RC EXISTING CONDUIT OR CONDUCTOR
(N): NEW CONDUIT OR CONDUCTOR

NOTES: (THIS SHEET ONLY)

1. EXISTING TWO MODEL 170 ASSEMBLY IN MODEL 334 CONTROLLER CABINET. SEE SHEET E-135 FOR tms 2178 REFERENCE. RECONNECT EXISTING OCTA COMMUNICATION EQUIPMENT TO NEW FO.
2. ADD 1 TYPE D FOC, 2#8 TO EXISTING CONDUIT.
3. FOR GENERAL NOTES, LEGEND, AND ABBREVIATIONS, SEE SHEETS E-1, E-2 AND E-61.

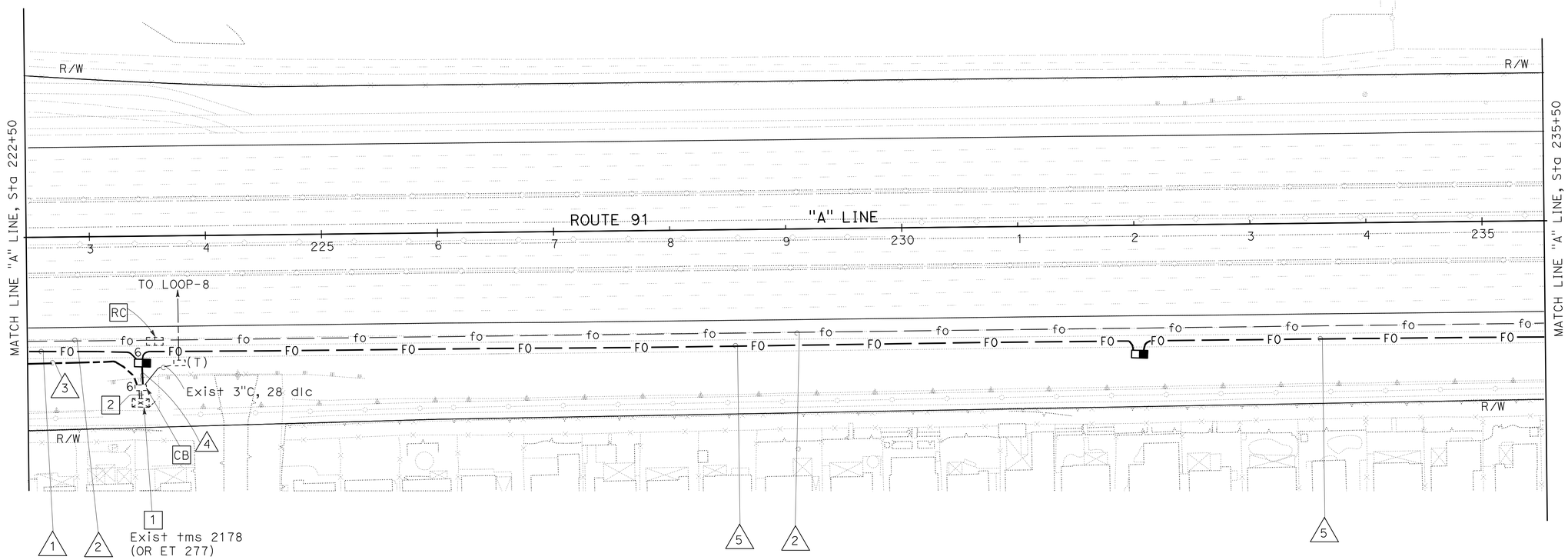

OCTA FACILITY

SCALE: 1" = 50′

E-75

THIS PLAN IS ACCURATE FOR ELECTRICAL WORK ONLY.

STATE OF CALIFORNIA - DEPARTMENT OF TRANSPORTATION
Caltrans® ELECTRICAL DESIGN

FUNCTIONAL SUPERVISOR: SHAHRAM SHAHRIARI
CALCULATED-DESIGNED BY: JOANNE VO
CHECKED BY: SHAHRAM SHAHRIARI
REVISED BY
DATE REVISED

LAST REVISION 10-13-10
DATE PLOTTED => 16-DEC-2010
TIME PLOTTED => 17:16

DIST	COUNTY	ROUTE	POST MILE TOTAL PROJECT	SHEET No	TOTAL SHEETS
12	Ora	91	9.1/15.1	651	949

08-12-10
REGISTERED ELECTRICAL ENGINEER

10-25-10
PLANS APPROVAL DATE

REGISTERED PROFESSIONAL ENGINEER
JOANNE VO
No. E 16748
Exp. 9/30/12
ELECTRICAL
STATE OF CALIFORNIA

The State of California or its officers or agents shall not be responsible for the accuracy or completeness of electronic copies of this plan sheet.

FOR ACCURATE RIGHT OF WAY AND ACCESS DATA,
CONTACT RIGHT OF WAY ENGINEERING AT THE DISTRICT OFFICE.

NOTES: (THIS SHEET ONLY)

1. RELOCATE EXISTING STEP DOWN TRANSFORMER CABINET AND ITS EQUIPMENT. SEE DETAIL B, SHEET E-55 FOR TRANSFORMER FOUNDATION.

2. PULL BOX COVERS SHALL BE MARKED AS "OCTA".

3. SEE SHEETS E-58, E-59 AND E-60 FOR FOC SPLICING SCHEDULE AND ELEMENT SCHEMATIC.

4. FOR GENERAL NOTES, LEGEND, AND ABBREVIATIONS, SEE SHEETS E-1, E-2 AND E-61.

5. RELOCATE EXISTING OCTA LOOP CONTROLLER ASSEMBLY IN MODEL 303 ENCLOSURE. SEE DETAIL A IN SHEET E-55.

CONDUCTOR AND CONDUIT SCHEDULE

CONDUCTOR TYPE	1	2	3
TYPE C CABLE (OCTA)	1(N)		1(N)
TYPE C CABLE (STATE)	-	1(R)	-
4#6 POWER CABLE	1(N)	1(R)	-
EXISTING OCTA FOC		1(R)	-
CONDUIT SIZE	3"(N)	3", 4"(R)	3"(N)

(R): RC EXISTING CONDUIT OR CONDUCTOR
(N): NEW CONDUIT OR CONDUCTOR

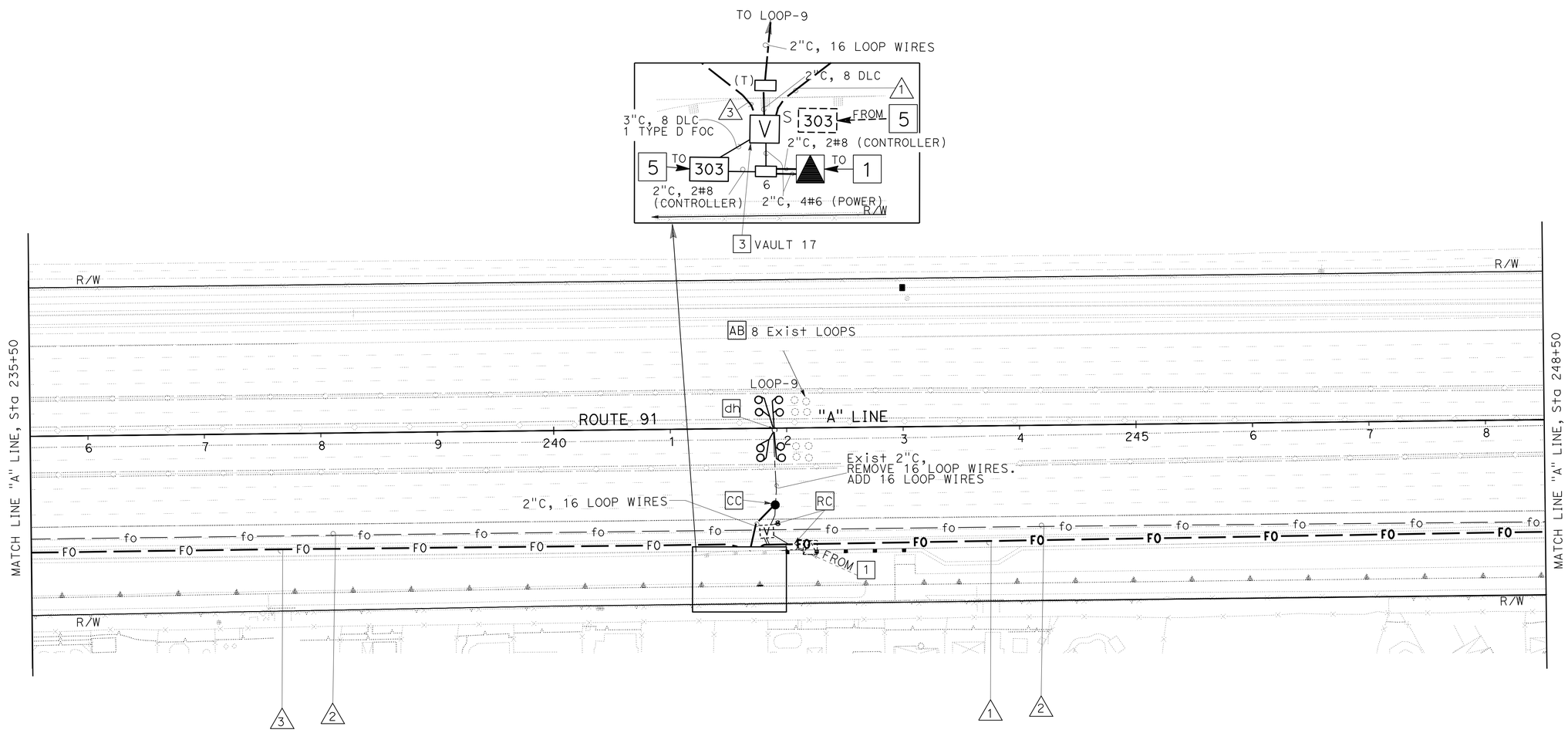

THIS PLAN IS ACCURATE FOR ELECTRICAL WORK ONLY.

OCTA FACILITY

SCALE: 1" = 50'

E-76

STATE OF CALIFORNIA - DEPARTMENT OF TRANSPORTATION
Caltrans **ELECTRICAL DESIGN**

PROJECT ENGINEER: SHAHRAM SHAHRIARI

CALCULATED/DESIGNED BY: JOANNE VO
CHECKED BY: SHAHRAM SHAHRIARI

REVISED BY
DATE REVISED

LAST REVISION 07-15-10
DATE PLOTTED => 17-DEC-2010
TIME PLOTTED => 09:54

Dist	COUNTY	ROUTE	POST MILES TOTAL PROJECT	SHEET No.	TOTAL SHEETS
12	Ora	91	9.1/15.1	652	949

REGISTERED ELECTRICAL ENGINEER 08-12-10 DATE

PLANS APPROVAL DATE 10-25-10

REGISTERED PROFESSIONAL ENGINEER JOANNE VO No. E 16748 Exp. 9/30/12 ELECTRICAL STATE OF CALIFORNIA

THE STATE OF CALIFORNIA OR ITS OFFICERS OR AGENTS SHALL NOT BE RESPONSIBLE FOR THE ACCURACY OR COMPLETENESS OF SCANNED COPIES OF THIS PLAN SHEET.

FOR ACCURATE RIGHT OF WAY AND ACCESS DATA,
CONTACT RIGHT OF WAY ENGINEERING AT THE DISTRICT OFFICE.

NOTES: (THIS SHEET ONLY)

1. EXISTING TWO TYPE 170 CONTROLLERS IN EXISTING MODEL 334 CONTROLLER CABINET. SEE SHEET E-136. RECONNECT EXISTING OCTA COMMUNICATION EQUIPMENT TO NEW FO.
2. RELOCATE EXISTING STEP DOWN TRANSFORMER CABINET AND ITS EQUIPMENT. SEE DETAIL B IN SHEET E-55 FOR FOUNDATION.
3. SEE SHEETS E-58, E-59 AND E-60 FOR FOC SPLICING SCHEDULE AND ELEMENT SCHEMATIC. SPLICE EXISTING 2 TYPE D foc TO NEW TYPE C FOC.
4. PULL BOX COVERS SHALL BE MARKED AS "OCTA".
5. FOR GENERAL NOTES, LEGEND, AND ABBREVIATIONS, SEE SHEETS E-1, E-2 AND E-61.
6. ADD 1 TYPE D FOC, 2#8 TO EXISTING 2-3"C. SEE SHEET E-136 FOR TMS REFERENCE.

CONDUCTOR AND CONDUIT SCHEDULE

CONDUCTOR TYPE	1	2	3
EXISTING OCTA FOC		1(R)	
TYPE C CABLE (OCTA)	1(N)		1(N)
TYPE C CABLE (STATE)	-	1(R)	-
4#6 POWER CABLE	1(N)	1(R)	1(N)
TYPE D CABLE (OCTA)			1(N)
CONDUIT SIZE	3"(N)	3", 4"(R)	3"(N)

(R): RC EXISTING CONDUIT OR CONDUCTOR
(N): NEW CONDUIT OR CONDUCTOR
(E): EXISTING CONDUIT OR CONDUCTOR

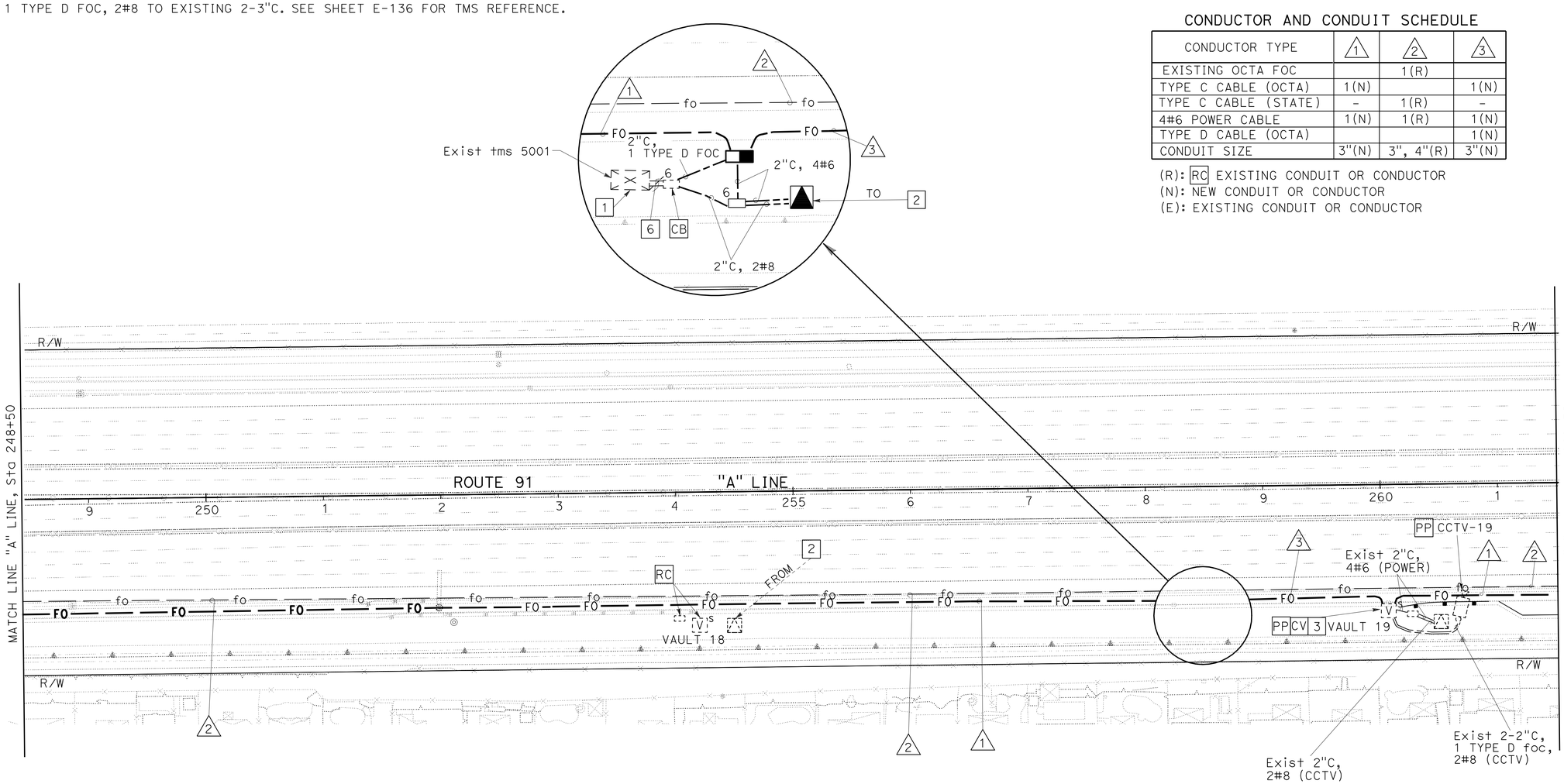

OCTA FACILITY

SCALE: 1" = 50'

E-77

THIS PLAN IS ACCURATE FOR ELECTRICAL WORK ONLY.

STATE OF CALIFORNIA - DEPARTMENT OF TRANSPORTATION
Caltrans® ELECTRICAL DESIGN

FUNCTIONAL SUPERVISOR: S. SHAHRIARI
CALCULATED-DESIGNED BY: JOANNE VO
CHECKED BY: S. SHAHRIARI
REVISED BY / DATE REVISED

LAST REVISION 07-01-10 | DATE PLOTTED => 17-DEC-2010 | TIME PLOTTED => 09:54

FOR ACCURATE RIGHT OF WAY AND ACCESS DATA,
CONTACT RIGHT OF WAY ENGINEERING AT THE DISTRICT OFFICE.

Dist	COUNTY	ROUTE	POST MILES TOTAL PROJECT	SHEET No.	TOTAL SHEETS
12	Ora	91	9.1/15.1	653	949

REGISTERED ELECTRICAL ENGINEER 08-12-10 DATE

10-25-10
PLANS APPROVAL DATE

REGISTERED PROFESSIONAL ENGINEER
JOANNE VO
No. E 16748
Exp. 9/30/12
ELECTRICAL
STATE OF CALIFORNIA

THE STATE OF CALIFORNIA OR ITS OFFICERS OR AGENTS SHALL NOT BE RESPONSIBLE FOR THE ACCURACY OR COMPLETENESS OF SCANNED COPIES OF THIS PLAN SHEET.

NOTES: (THIS SHEET ONLY)

1. SEE SHEET E-109, FOR STATE FOC REFERENCE.
2. FOR GENERAL NOTES, LEGEND AND ABBREVIATIONS, SEE SHEETS E-1, E-2 AND E-61.

CONDUCTOR AND CONDUIT SCHEDULE

CONDUCTOR TYPE	1	2
EXISTING OCTA FOC		1(R)
TYPE C CABLE (OCTA)	1(N)	
TYPE C CABLE (STATE)	-	1(R)
4#6 POWER CABLE	1(N)	1(R)
CONDUIT SIZE	3"(N)	3", 4"(R)

(R): RC EXISTING CONDUIT OR CONDUCTOR
(N): NEW CONDUIT OR CONDUCTOR

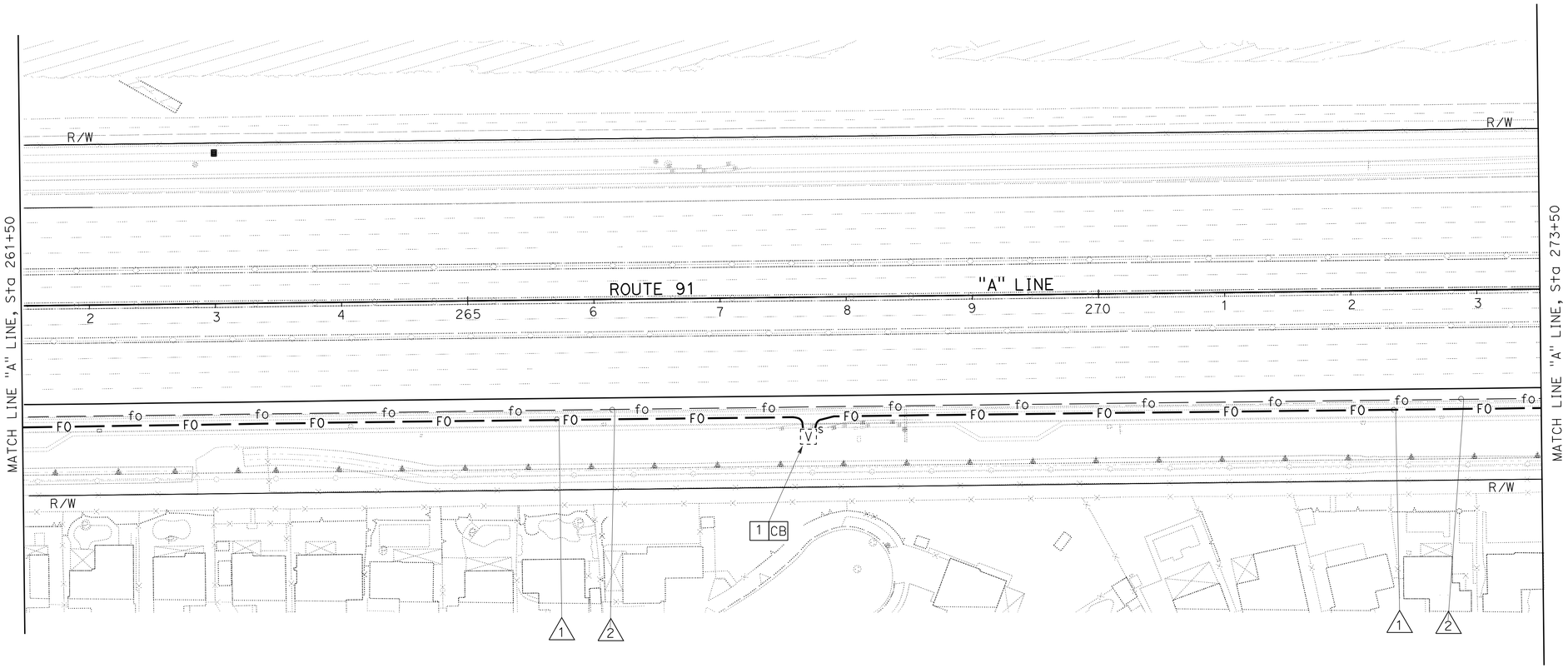

OCTA FACILITY

SCALE: 1" = 50'

E-78

THIS PLAN IS ACCURATE FOR ELECTRICAL WORK ONLY.

STATE OF CALIFORNIA - DEPARTMENT OF TRANSPORTATION
Caltrans® ELECTRICAL DESIGN

FUNCTIONAL SUPERVISOR: S. SHAHRIARI
CALCULATED-DESIGNED BY: JOANNE VO
CHECKED BY: S. SHAHRIARI
REVISED BY
DATE REVISED

LAST REVISION 07-01-10
DATE PLOTTED => 16-DEC-2010
TIME PLOTTED => 17:16

Dist	COUNTY	ROUTE	POST MILES TOTAL PROJECT	SHEET No.	TOTAL SHEETS
12	Ora	91	9.1/15.1	654	949

REGISTERED ELECTRICAL ENGINEER 08-12-10 DATE

PLANS APPROVAL DATE 10-25-10

REGISTERED PROFESSIONAL ENGINEER JOANNE VO No. E 16748 Exp. 9/30/12 ELECTRICAL STATE OF CALIFORNIA

THE STATE OF CALIFORNIA OR ITS OFFICERS OR AGENTS SHALL NOT BE RESPONSIBLE FOR THE ACCURACY OR COMPLETENESS OF SCANNED COPIES OF THIS PLAN SHEET.

FOR ACCURATE RIGHT OF WAY AND ACCESS DATA,
CONTACT RIGHT OF WAY ENGINEERING AT THE DISTRICT OFFICE.

NOTES: (THIS SHEET ONLY)

1. RELOCATE EXISTING STEP DOWN TRANSFORMER CABINET AND ITS EQUIPMENT. SEE DETAIL B IN SHEET E-55 FOR FOUNDATION.
2. INSTALL RELOCATED EXISTING CCTV ON TOP OF SIGN POLE BY POLE EXTENSION TYPE CCTV 10. MOUNT RELOCATED CCTV CONTROLLER ASSEMBLY, NEMA 4R ENCLOSURE AND ITS EQUIPMENT TO SIGN POLE. SEE DETAIL, SHEET E-54.
3. SEE SHEETS E-58, E-59 AND E-60 FOR FOC SPLICING SCHEDULE AND ELEMENT SCHEMATIC.
4. EXISTING TWO TYPE 170 CONTROLLERS IN EXISTING TYPE 334 ASSEMBLY. SEE SHEET E-137 FOR TMS REFERENCE. RECONNECT EXISTING OCTA COMMUNICATION EQUIPMENT TO NEW FO.
5. FOR GENERAL NOTES, LEGEND AND ABBREVIATIONS, SEE SHEETS E-1, E-2 AND E-61.
6. INSTALL 2"C, 4#6 (POWER).
7. FOUNDATION IS ON THE SLOPE.
8. CHECK DRAINAGE PLAN TO AVOID CONFLICT WITH INLET AND PIPE.

CONDUCTOR AND CONDUIT SCHEDULE

CONDUCTOR TYPE	1	2	3
EXISTING OCTA FOC		1(R)	
TYPE C CABLE (OCTA)	1(N)		1(N)
TYPE C CABLE (STATE)	-	1(R)	-
4#6 POWER CABLE	1(N)	1(R)	1(N)
TYPE D CABLE (OCTA)			1(N)
CONDUIT SIZE	3"(N)	3", 4"(R)	3"(N)

(R): RC EXISTING CONDUIT OR CONDUCTOR
(N): NEW CONDUIT OR CONDUCTOR

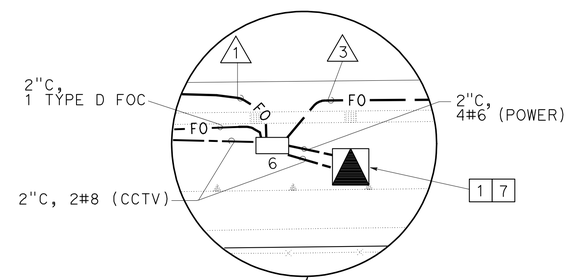

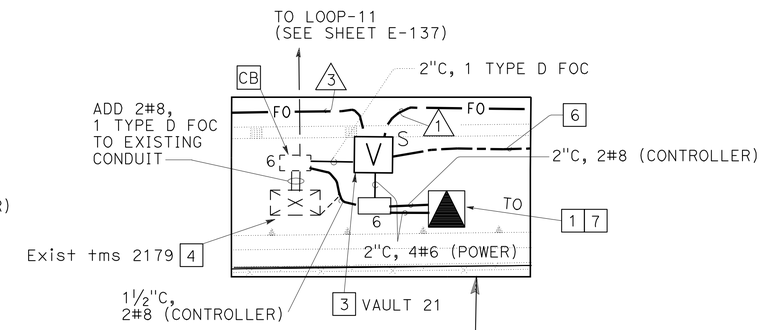

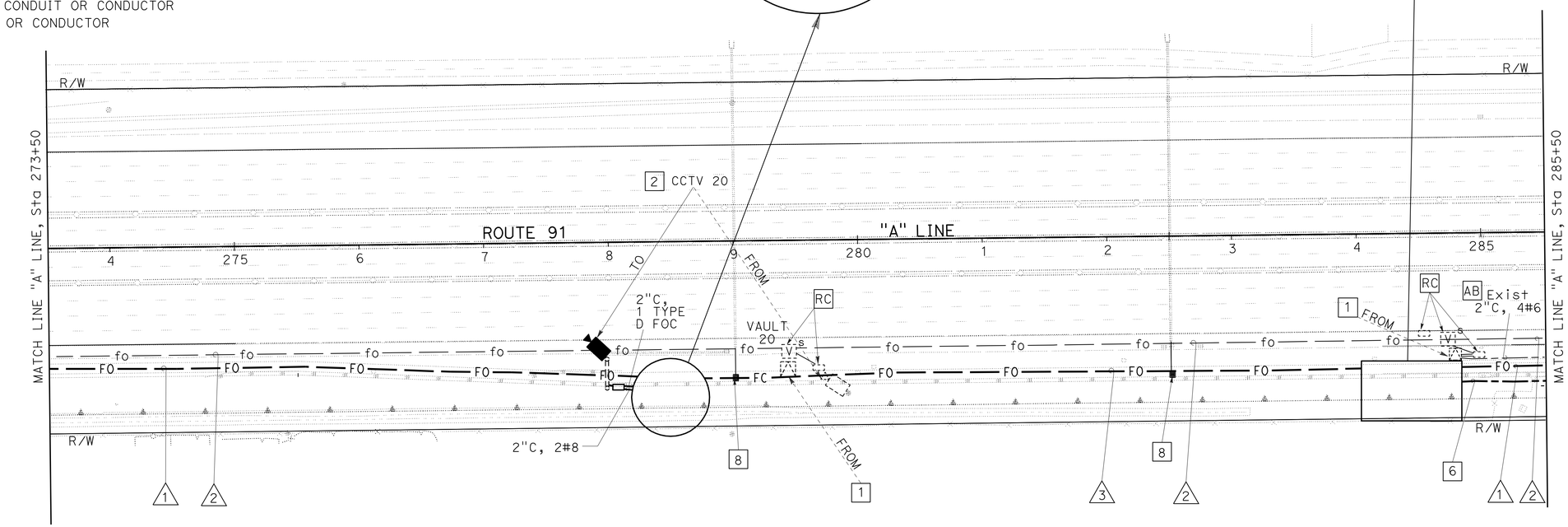

OCTA FACILITY

SCALE: 1" = 50'

E-79

THIS PLAN IS ACCURATE FOR ELECTRICAL WORK ONLY.

STATE OF CALIFORNIA - DEPARTMENT OF TRANSPORTATION
Caltrans® ELECTRICAL DESIGN

FUNCTIONAL SUPERVISOR: S. SHAHRIARI
CALCULATED-DESIGNED BY: JOANNE VO
CHECKED BY: S. SHAHRIARI
REVISED BY
DATE REVISED

LAST REVISION 07-01-10 | DATE PLOTTED => 17-DEC-2010 | TIME PLOTTED => 09:55

DIST	COUNTY	ROUTE	POST MILE TOTAL PROJECT	SHEET No	TOTAL SHEETS
12	Ora	91	9.1/15.1	655	949

08-12-10
REGISTERED ELECTRICAL ENGINEER

10-25-10
PLANS APPROVAL DATE

REGISTERED PROFESSIONAL ENGINEER JOANNE VO No. E 16748 Exp. 9/30/12 ELECTRICAL STATE OF CALIFORNIA

The State of California or its officers or agents shall not be responsible for the accuracy or completeness of electronic copies of this plan sheet.

FOR ACCURATE RIGHT OF WAY AND ACCESS DATA,
CONTACT RIGHT OF WAY ENGINEERING AT THE DISTRICT OFFICE.

NOTES: (THIS SHEET ONLY)

1. FOR GENERAL NOTES, LEGEND, AND ABBREVIATIONS, SEE SHEETS E-1, E-2 AND E-61.

2 Exist 480 V, 3Ø, 4W TYPE III-BF METERED SERVICE EQUIPMENT ENCLOSURE. ADDRESS: 7793 SANTA ANA CANYON Rd.
3P, 480 V, 100 A, CB FOR MAIN.
3P, 480 V, 20 A, CB FOR SUBPANEL.

3. NEW PULL BOXES COVER SHALL BE MARKED AS "OCTA".

CONDUCTOR AND CONDUIT SCHEDULE

CONDUCTOR TYPE	1	2
EXISTING OCTA FOC		1(R)
TYPE C CABLE (OCTA)	1(N)	
TYPE C CABLE (STATE)	-	1(R)
4#6 POWER CABLE	1(N)	
CONDUIT SIZE	3"(N)	3", 4"(R)

(R): RC EXISTING CONDUIT OR CONDUCTOR
(N): NEW CONDUIT OR CONDUCTOR

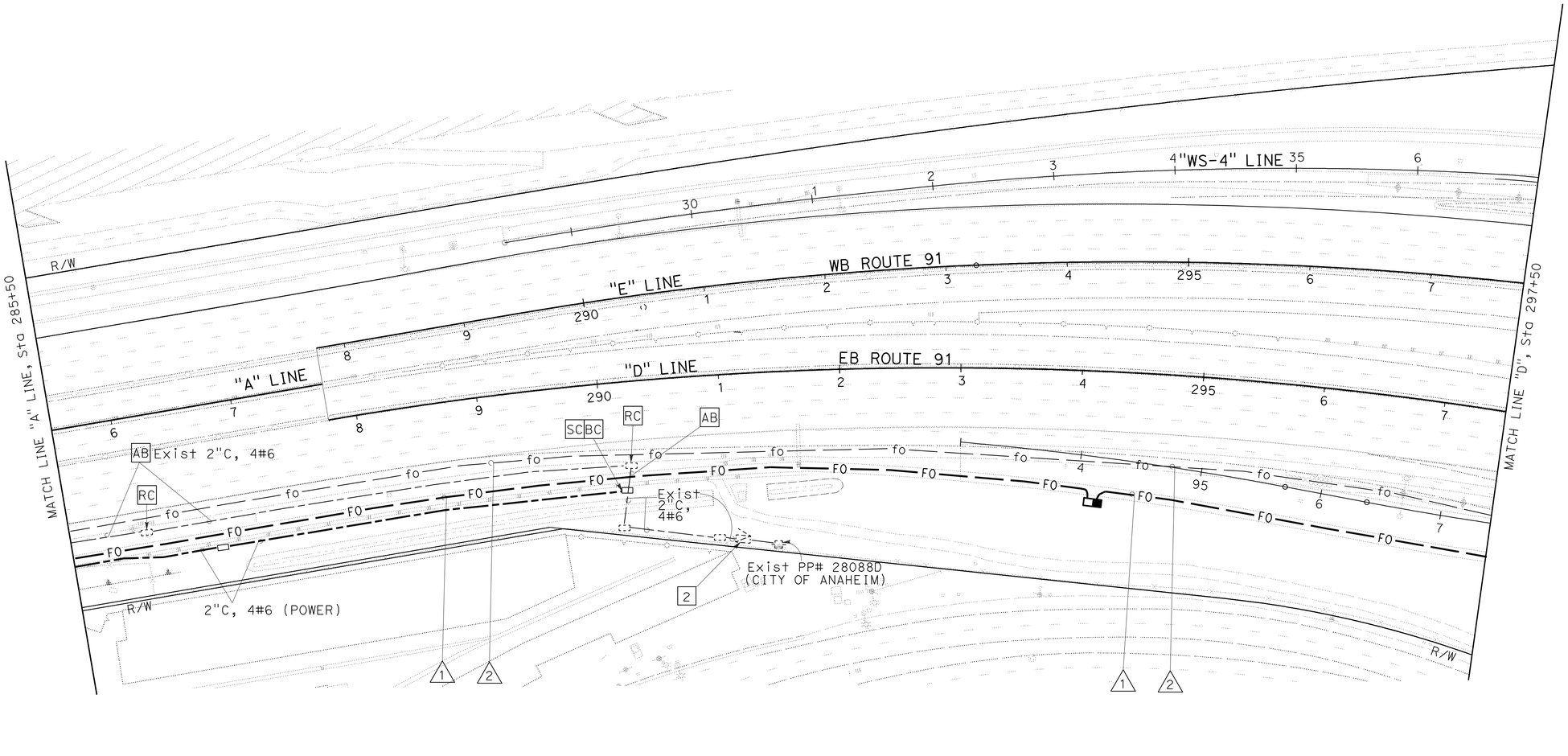

OCTA FACILITY

SCALE: 1" = 50'

E-80

THIS PLAN IS ACCURATE FOR ELECTRICAL WORK ONLY.

STATE OF CALIFORNIA - DEPARTMENT OF TRANSPORTATION
Caltrans ELECTRICAL DESIGN

PROJECT ENGINEER SHAHRAM SHAHRIARI

CALCULATED/DESIGNED BY JOANNE VO
CHECKED BY SHAHRAM SHAHRIARI

REVISED BY
DATE REVISED

FOR REDUCED PLANS ORIGINAL 0 20 40 60 80

USERNAME => trphils
DGN FILE => c0g330ua082.dgn

CU 12390

EA 0G3301

LAST REVISION 07-15-10
DATE PLOTTED => 16-DEC-2010
TIME PLOTTED => 17:17

Dist	COUNTY	LOCATION CODE	POST MILES TOTAL PROJECT	SHEET No.	TOTAL SHEETS
12	Ora	91	9.1/15.1	656	949

REGISTERED ELECTRICAL ENGINEER — DATE 10-29-10

10-25-10
PLANS APPROVAL DATE

REGISTERED PROFESSIONAL ENGINEER — JOANNE VO No. E 16748 Exp. 9/30/12 ELECTRICAL — STATE OF CALIFORNIA

THE STATE OF CALIFORNIA OR ITS OFFICERS OR AGENTS SHALL NOT BE RESPONSIBLE FOR THE ACCURACY OR COMPLETENESS OF SCANNED COPIES OF THIS PLAN SHEET.

FOR ACCURATE RIGHT OF WAY AND ACCESS DATA,
CONTACT RIGHT OF WAY ENGINEERING AT THE DISTRICT OFFICE.

CONDUCTOR AND CONDUIT SCHEDULE

CONDUCTOR TYPE	1	2	3	4	5	6
EXISTING OCTA FOC		1(R)	1(R)			
TYPE C CABLE (OCTA)	1(N)		1(N)		1(N)	
TYPE C CABLE (STATE)	-	1(R) (*)		-	-	-
4#6 POWER CABLE		1(R)	1(R)/1(N)			1(N)
TYPE D CABLE (OCTA)				1(N)		
CONDUIT SIZE	3"(N)	3",4" (R)	3"(E)	2"(N)	3"(N)	2"(N)

(R): RC EXISTING CONDUIT OR CONDUCTOR
(N): NEW CONDUIT OR CONDUCTOR
(E): EXISTING CONDUIT OR CONDUCTOR
(*): SEE SHEET E-112 FOR STATE FOC REFERENCE

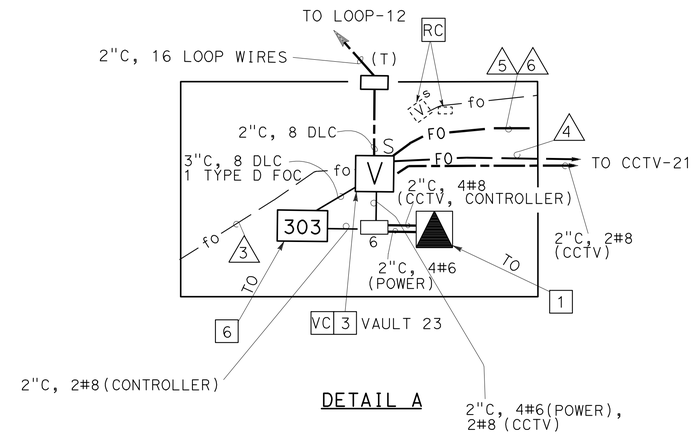

DETAIL A

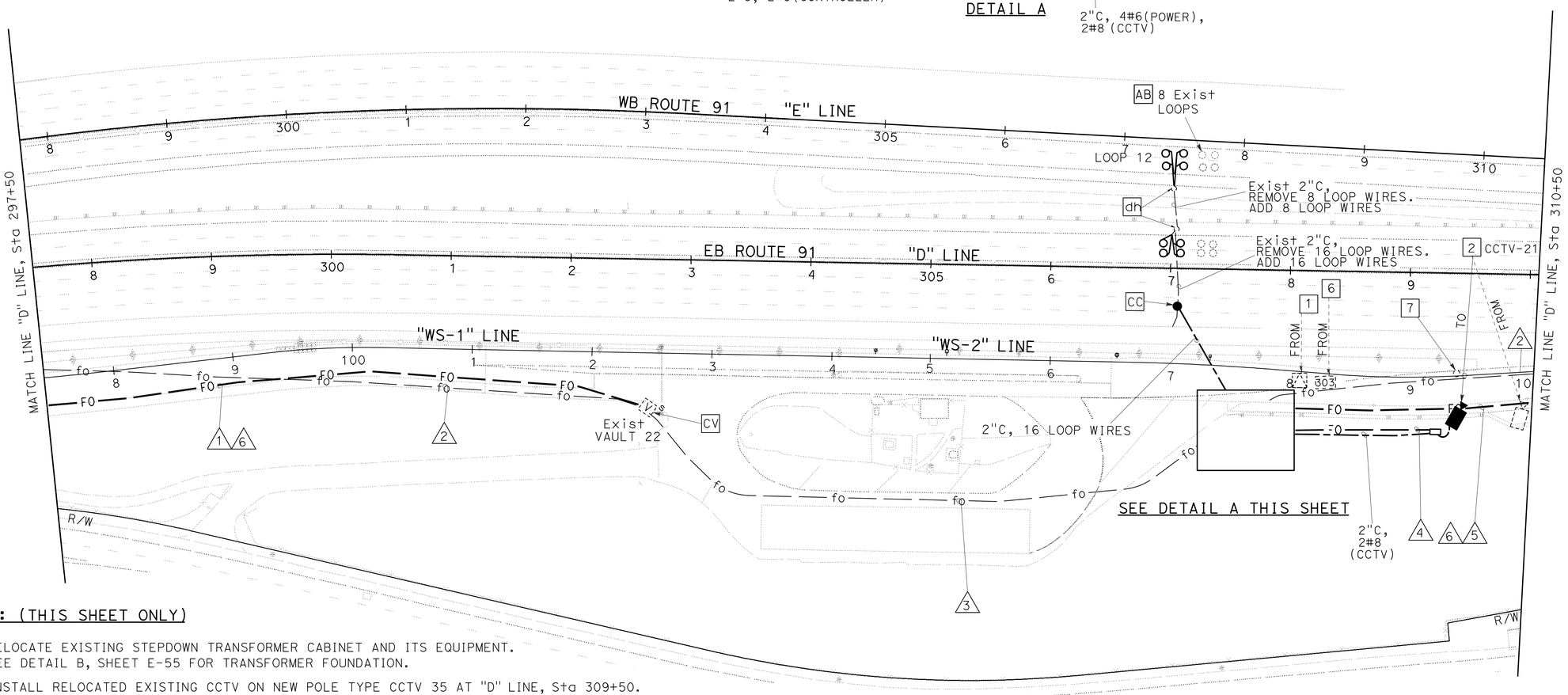

NOTES: (THIS SHEET ONLY)

1. RELOCATE EXISTING STEPDOWN TRANSFORMER CABINET AND ITS EQUIPMENT. SEE DETAIL B, SHEET E-55 FOR TRANSFORMER FOUNDATION.
2. INSTALL RELOCATED EXISTING CCTV ON NEW POLE TYPE CCTV 35 AT "D" LINE, Sta 309+50. MOUNT RELOCATED CCTV CONTROLLER ASSEMBLY, NEMA 4R ENCLOSURE AND ITS EQUIPMENT TO NEW POLE. SEE DETAIL, SHEET E-54.
3. SEE SHEETS E-58, E-59 AND E-60 FOR FOC SPLICING SCHEDULE AND ELEMENT SCHEMATIC.
4. PULL BOX COVERS SHALL BE MARKED AS "OCTA".
5. FOR GENERAL NOTES, LEGEND, AND ABBREVIATIONS, SEE SHEETS E-1, E-2 AND E-61.
6. RELOCATE EXISTING OCTA LOOP CONTROLLER ASSEMBLY IN MODEL 303 ENCLOSURE. SEE DETAIL A IN SHEET E-55.
7. RS EXISTING CCTV POLE.

OCTA FACILITY

SCALE: 1" = 50'

E-81

THIS PLAN IS ACCURATE FOR ELECTRICAL WORK ONLY.

STATE OF CALIFORNIA - DEPARTMENT OF TRANSPORTATION
Caltrans® ELECTRICAL DESIGN

FUNCTIONAL SUPERVISOR: SHAHRAM SHAHRIARI
CALCULATED-DESIGNED BY: JOANNE VO
CHECKED BY: SHAHRAM SHAHRIARI
REVISED BY
DATE REVISED

LAST REVISION 10-13-10 | DATE PLOTTED => 16-DEC-2010 | TIME PLOTTED => 17:17

Dist	COUNTY	LOCATION CODE	POST MILES TOTAL PROJECT	SHEET No.	TOTAL SHEETS
12	Ora	91	9.1/15.1	657	949

10-29-10
REGISTERED ELECTRICAL ENGINEER DATE

10-25-10
PLANS APPROVAL DATE

REGISTERED PROFESSIONAL ENGINEER JOANNE VO No. E 16748 Exp. 9/30/12 ELECTRICAL STATE OF CALIFORNIA

THE STATE OF CALIFORNIA OR ITS OFFICERS OR AGENTS SHALL NOT BE RESPONSIBLE FOR THE ACCURACY OR COMPLETENESS OF SCANNED COPIES OF THIS PLAN SHEET.

FOR ACCURATE RIGHT OF WAY AND ACCESS DATA,
CONTACT RIGHT OF WAY ENGINEERING AT THE DISTRICT OFFICE.

NOTE: (THIS SHEET ONLY)

FOR GENERAL NOTES, LEGEND, AND ABBREVIATIONS, SEE SHEET E-1, E-2 AND E-61.

CONDUCTOR AND CONDUIT SCHEDULE

CONDUCTOR TYPE	1	2
EXISTING OCTA FOC		1(R)
TYPE C CABLE (OCTA)	1(N)	
TYPE C CABLE (STATE)	-	1(R)
4#6 POWER CABLE	1(N)	1(R)
CONDUIT SIZE	3"(N)	3", 4"(R)

(R): RC EXISTING CONDUIT OR CONDUCTOR
(N): NEW CONDUIT OR CONDUCTOR

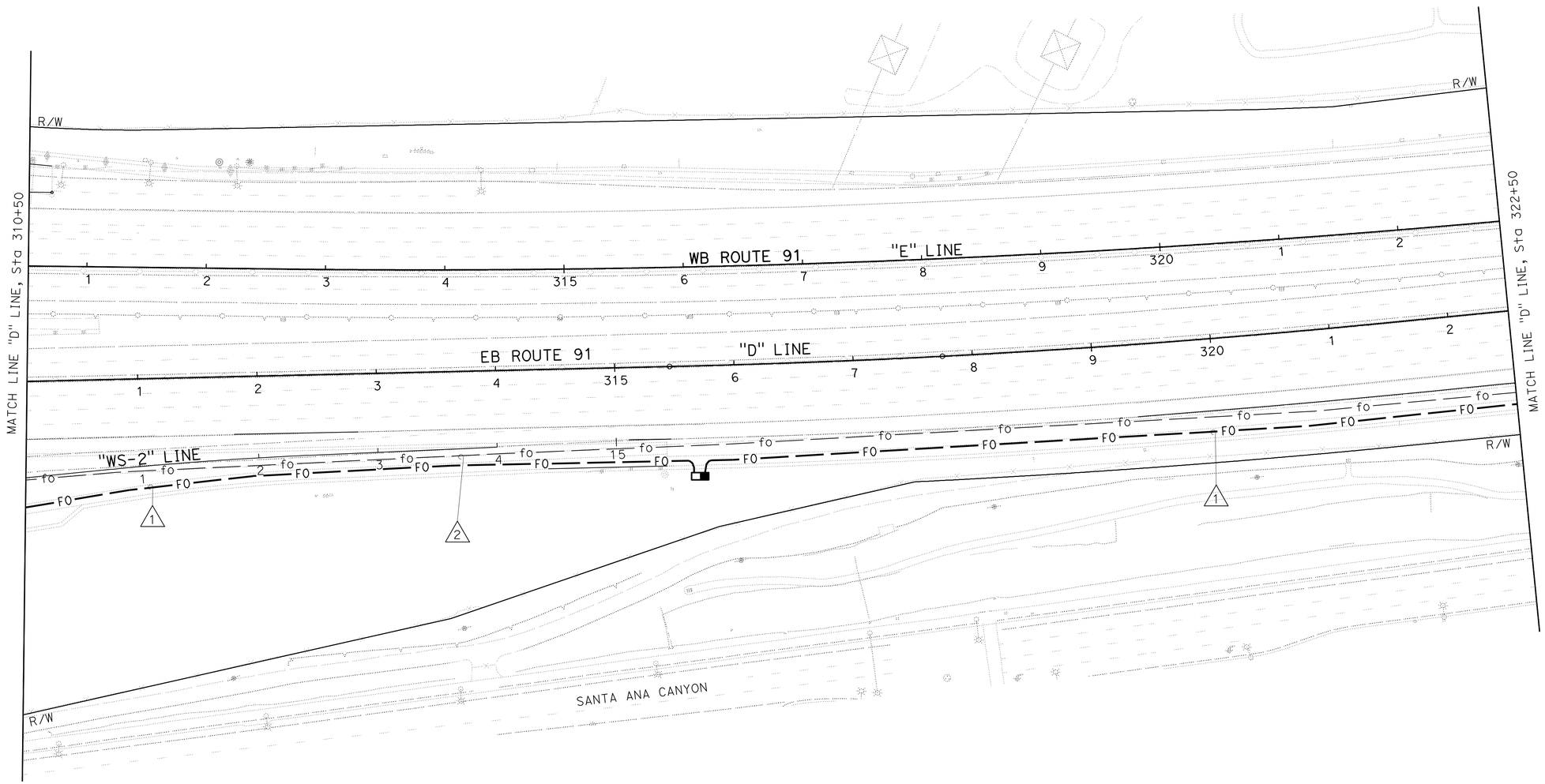

THIS PLAN IS ACCURATE FOR ELECTRICAL WORK ONLY.

OCTA FACILITY

SCALE: 1" = 50'

E-82

STATE OF CALIFORNIA - DEPARTMENT OF TRANSPORTATION
Caltrans® ELECTRICAL DESIGN

FUNCTIONAL SUPERVISOR: SHAHRAM SHAHRIARI
CALCULATED-DESIGNED BY: JOANNE VO
CHECKED BY: SHAHRAM SHAHRIARI
REVISED BY
DATE REVISED

LAST REVISION 10-13-10
DATE PLOTTED => 16-DEC-2010
TIME PLOTTED => 17:17

DIST	COUNTY	ROUTE	POST MILE TOTAL PROJECT	SHEET No	TOTAL SHEETS
12	Ora	91	9.1/15.1	658	949

REGISTERED ELECTRICAL ENGINEER 08-12-10

PLANS APPROVAL DATE 10-25-10

REGISTERED PROFESSIONAL ENGINEER JOANNE VO No. E 16748 Exp. 9/30/12 ELECTRICAL STATE OF CALIFORNIA

The State of California or its officers or agents shall not be responsible for the accuracy or completeness of electronic copies of this plan sheet.

FOR ACCURATE RIGHT OF WAY AND ACCESS DATA,
CONTACT RIGHT OF WAY ENGINEERING AT THE DISTRICT OFFICE.

CONDUCTOR AND CONDUIT SCHEDULE

CONDUCTOR TYPE	1	2	3	4	5	6 (STATE)
EXISTING OCTA FOC		1(R)		1(R)	1(E)	
TYPE C CABLE (OCTA)	1(N)		1(N)	1(N)		
TYPE C CABLE (STATE)	-	1(R)				1(AB)
4#6 POWER CABLE	1(N)	1(R)	-	1(R)/1(N)	1(E)	
CONDUIT SIZE	3"(N)	3", 4"(R)	3"(N)	3"(E)	3"(E)	4"(AB)

(R): RC EXISTING CONDUIT OR CONDUCTOR
(N): NEW CONDUIT OR CONDUCTOR
(E): EXISTING CONDUIT OR CONDUCTOR
(AB): ABANDON EXISTING CONDUIT OR CONDUCTOR

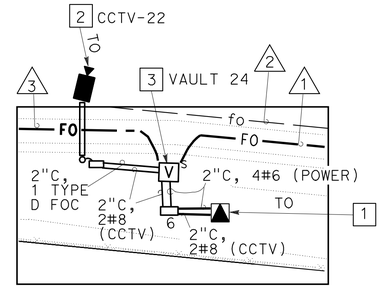

DETAIL A

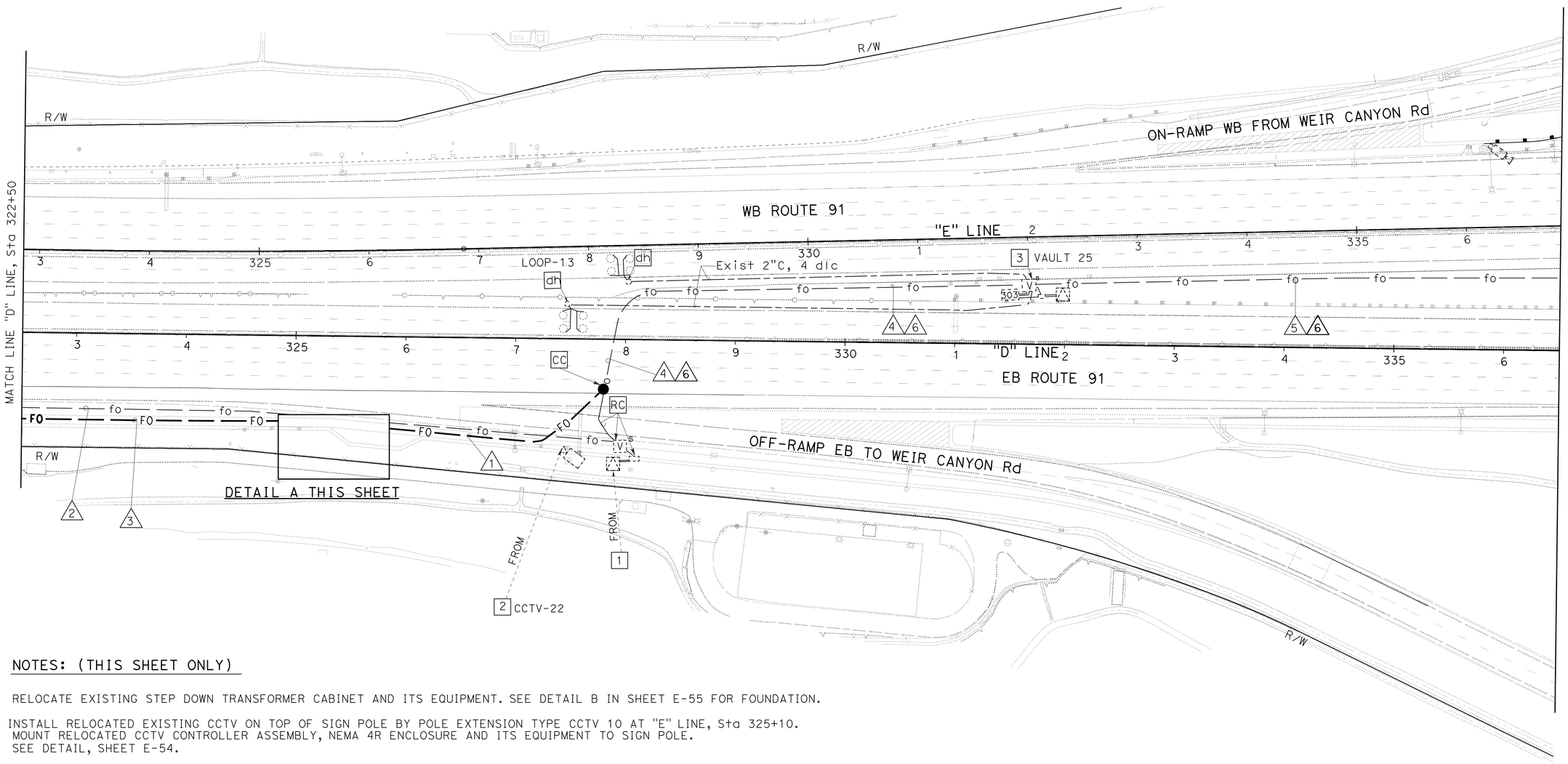

NOTES: (THIS SHEET ONLY)

1. RELOCATE EXISTING STEP DOWN TRANSFORMER CABINET AND ITS EQUIPMENT. SEE DETAIL B IN SHEET E-55 FOR FOUNDATION.
2. INSTALL RELOCATED EXISTING CCTV ON TOP OF SIGN POLE BY POLE EXTENSION TYPE CCTV 10 AT "E" LINE, Sta 325+10. MOUNT RELOCATED CCTV CONTROLLER ASSEMBLY, NEMA 4R ENCLOSURE AND ITS EQUIPMENT TO SIGN POLE. SEE DETAIL, SHEET E-54.
3. SEE SHEET E-58, E-59 AND E-60 FOR FOC SPLICING SCHEDULE AND ELEMENT SCHEMATIC. SPLICE EXISTING 4#6 TO NEW 4#6.
4. PULL BOX COVERS SHALL BE MARKED AS "OCTA".
5. FOR GENERAL NOTES, LEGEND, AND ABBREVIATIONS, SEE SHEET E-1, E-2 AND E-61.

THIS PLAN IS ACCURATE FOR ELECTRICAL WORK ONLY.

OCTA FACILITY

SCALE: 1" = 50'

E-83

REVISED BY	DATE REVISED
JOANNE VO	SHAHRAM SHAHRIARI
CALCULATED/DESIGNED BY	CHECKED BY
PROJECT ENGINEER	SHAHRAM SHAHRIARI

STATE OF CALIFORNIA - DEPARTMENT OF TRANSPORTATION
Caltrans ELECTRICAL DESIGN

LAST REVISION 07-15-10 | DATE PLOTTED => 16-DEC-2010 | TIME PLOTTED => 17:17

FOR REDUCED PLANS ORIGINAL 0 20 40 60 80

USERNAME => trphils
DGN FILE => c0g330ua085.dgn

CU 12390 | EA 0G3301

DIST	COUNTY	ROUTE	POST MILE TOTAL PROJECT	SHEET No	TOTAL SHEETS
12	Ora	91	9.1/15.1	659	949

REGISTERED ELECTRICAL ENGINEER 08-12-10

PLANS APPROVAL DATE 10-25-10

REGISTERED PROFESSIONAL ENGINEER JOANNE VO No. E 16748 Exp. 9/30/12 ELECTRICAL STATE OF CALIFORNIA

The State of California or its officers or agents shall not be responsible for the accuracy or completeness of electronic copies of this plan sheet.

FOR ACCURATE RIGHT OF WAY AND ACCESS DATA,
CONTACT RIGHT OF WAY ENGINEERING AT THE DISTRICT OFFICE.

NOTES: (THIS SHEET ONLY)

1. INSTALL 3"C, 96 SMFO, 16 MMFO.
2. Exist 480 V, 3Ø, 4W TYPE III-BF METERED SERVICE EQUIPMENT ENCLOSURE. ADDRESS: 176 N RIVERVIEW Dr. 3P, 480 V, 200 A, CB FOR MAIN.
3. INSTALL 3"C, 3#300 MCM, 1#2.
4. Exist 3"C, REMOVE 3#300 MCM, 1#2. ADD NEW 3#300 MCM, 1#2.
5. SPLICE NEW 96 SMFO, 16 MMFO TO Exist 96 smfo, 16 mmfo, FIBER TO FIBER. SPLICING SHALL BE DONE SAME TIME AT BOTH SPLICE VAULTS TO MINIMIZE DOWN TIME TO 8 HOURS Max.
6. PULL BOX COVERS SHALL BE MARKED AS "OCTA".
7. FOR GENERAL NOTES, LEGEND, AND ABBREVIATIONS, SEE SHEET E-1, E-2 AND E-61.
8. Exist 480 V, 3Ø, 4W TYPE III-BF UNMETERED SERVICE EQUIPMENT ENCLOSURE.
9. Exist 3"C, REMOVE 96 smfo, 16 mmfo. ADD 96 SMFO, 16 MMFO.
10. INSTALL 2"C, 2#6.
11. ADD 2#6 TO EXISTING 3"C.
12. INSTALL STATE-FURNISHED MODEL 334 CONTROLLER CABINET (PROVIDED BY OCTA).

CONDUCTOR AND CONDUIT SCHEDULE

CONDUCTOR TYPE	1	2 (STATE)	3	4	5	6
EXISTING OCTA FOC	1(E)					
TYPE C CABLE (STATE)	-	1(AB)				
4#6 POWER CABLE	1(E)					
2#4/0, 1#2					1(E)	
3#4/0, 1#2						1(E)
CONDUIT SIZE	3"(E)	4"(AB)	3"(N)	2"(N)	3"(E)	3"(E)

(AB): ABANDON EXISTING CONDUIT OR CONDUCTOR
(E): EXISTING CONDUIT OR CONDUCTOR
(N): NEW CONDUIT OR CONDUCTOR

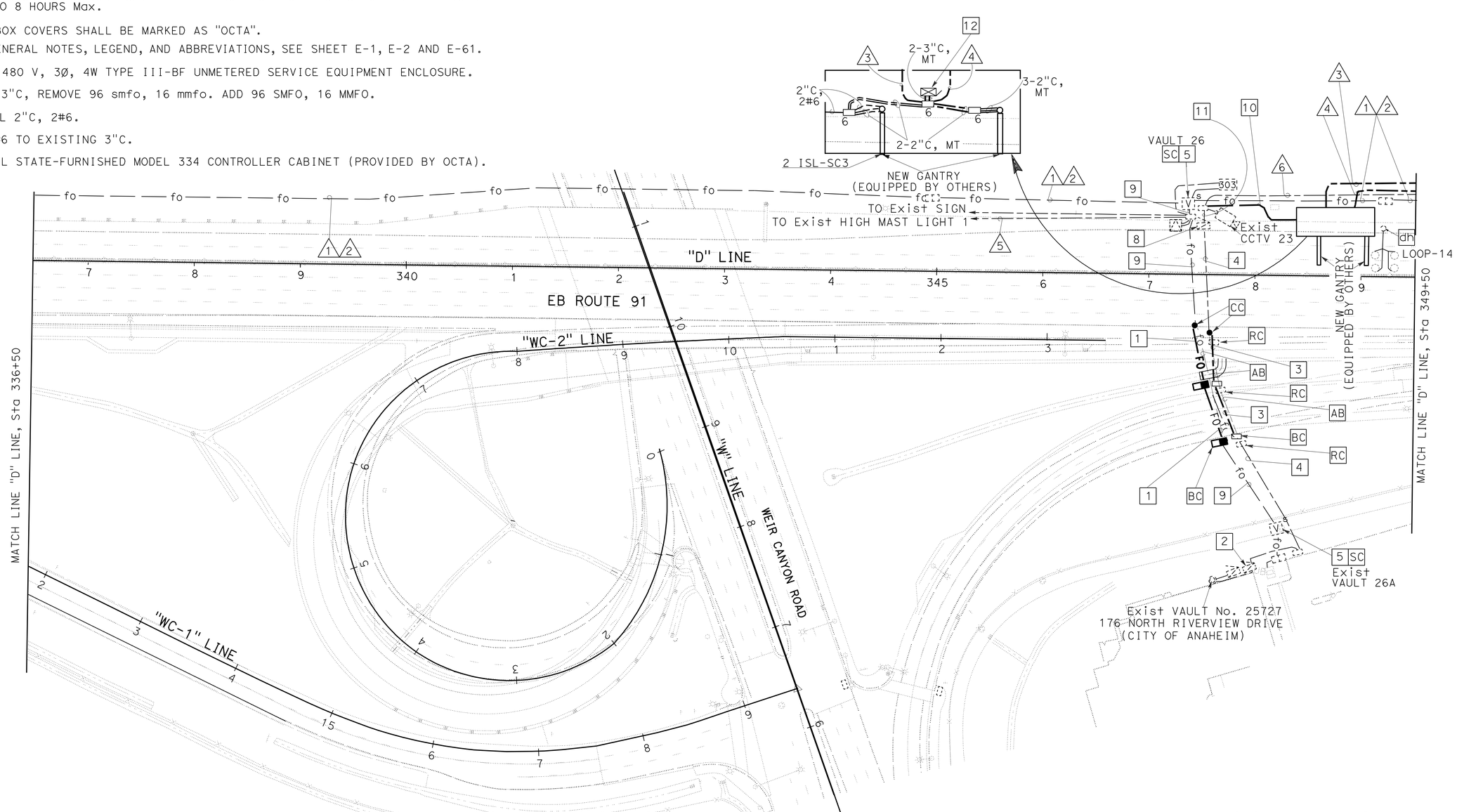

THIS PLAN IS ACCURATE FOR ELECTRICAL WORK ONLY.

OCTA FACILITY

SCALE: 1" = 50'

E-84

REVISED BY	DATE REVISED
JOANNE VO	SHAHRAM SHAHRIARI

CALCULATED/DESIGNED BY JOANNE VO
CHECKED BY SHAHRAM SHAHRIARI

PROJECT ENGINEER SHAHRAM SHAHRIARI

STATE OF CALIFORNIA - DEPARTMENT OF TRANSPORTATION
Caltrans ELECTRICAL DESIGN

LAST REVISION 07-30-10 | DATE PLOTTED => 16-DEC-2010 | TIME PLOTTED => 17:17

FOR REDUCED PLANS ORIGINAL 0 20 40 60 80

USERNAME => trphils
DGN FILE => c0g330ua086.dgn

CU 12390 | EA 0G3301

FOR ACCURATE RIGHT OF WAY AND ACCESS DATA,
CONTACT RIGHT OF WAY ENGINEERING AT THE DISTRICT OFFICE.

NOTES: (THIS SHEET ONLY)

1. FOR GENERAL NOTES, LEGEND, AND ABBREVIATIONS, SEE SHEET E-1, E-2 AND E-61.
2. PULL BOX COVERS SHALL BE MARKED AS "OCTA".
3. SEE SHEET E-58, E-59 AND E-60 FOR FOC SPLICING SCHEDULE AND ELEMENT SCHEMATIC.

4 INSTALL CCTV POLE TYPE 30, 120 FEET DISTANCE FROM THE CLOSEST GANTRY. THIS "EAST DATA-LOGGER" CCTV ASSEMBLY SHALL BE INSTALLED BY OTHERS.

CONDUCTOR AND CONDUIT SCHEDULE

CONDUCTOR TYPE	1	2 (STATE)	3	4	5	6
EXISTING OCTA FOC	1(E)					
TYPE C CABLE (STATE)	-	1(AB)				
4#6 POWER CABLE	1(E)					
3#4/0, 1#2					1(E)	
CONDUIT SIZE	3"(E)	4"(AB)	3"(N)	2"(N)	3"(E)	1½"(N)

(AB): ABANDON EXISTING CONDUIT OR CONDUCTOR
(E): EXISTING CONDUIT OR CONDUCTOR
(N): NEW CONDUIT OR CONDUCTOR

DIST	COUNTY	ROUTE	POST MILE TOTAL PROJECT	SHEET No	TOTAL SHEETS
12	Ora	91	9.1/15.1	660	949

08-12-10
REGISTERED ELECTRICAL ENGINEER

10-25-10
PLANS APPROVAL DATE

REGISTERED PROFESSIONAL ENGINEER
JOANNE VO
No. E 16748
Exp. 9/30/12
ELECTRICAL
STATE OF CALIFORNIA

The State of California or its officers or agents shall not be responsible for the accuracy or completeness of electronic copies of this plan sheet.

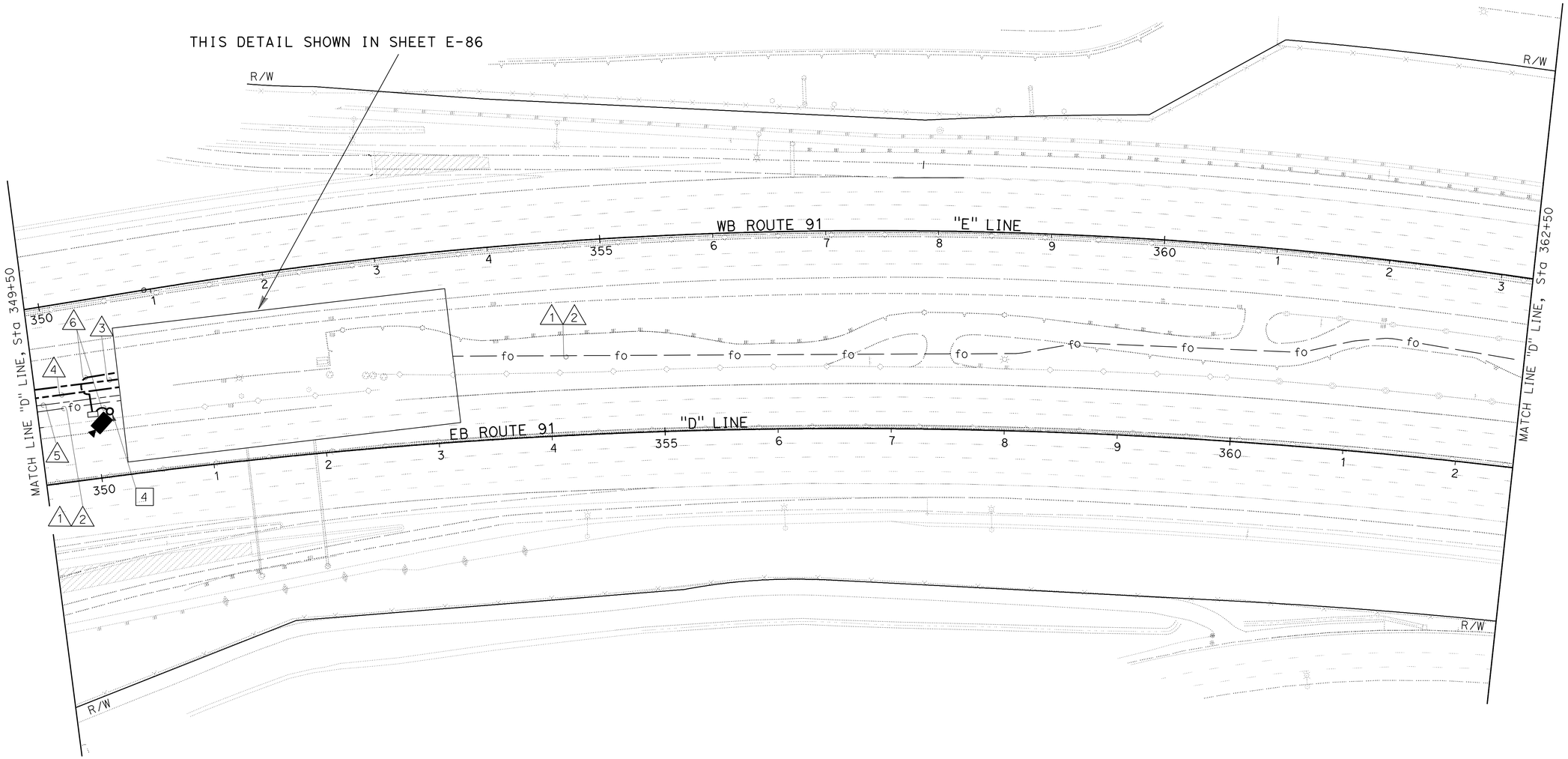

THIS PLAN IS ACCURATE FOR ELECTRICAL WORK ONLY.

OCTA FACILITY

SCALE: 1" = 50'

E-85

STATE OF CALIFORNIA - DEPARTMENT OF TRANSPORTATION
Caltrans ELECTRICAL DESIGN

PROJECT ENGINEER SHAHRAM SHAHRIARI
CALCULATED/DESIGNED BY JOANNE VO
CHECKED BY SHAHRAM SHAHRIARI
REVISED BY
DATE REVISED

LAST REVISION 07-15-10
DATE PLOTTED => 16-DEC-2010
TIME PLOTTED => 17:17

FOR REDUCED PLANS ORIGINAL 0 20 40 60 80
USERNAME => trphils
DGN FILE => c0g330ua087.dgn
CU 12390
EA 0G3301

DIST	COUNTY	ROUTE	POST MILE TOTAL PROJECT	SHEET No	TOTAL SHEETS
12	Ora	91	9.1/15.1	661	949

08-12-10
REGISTERED ELECTRICAL ENGINEER

10-25-10
PLANS APPROVAL DATE

REGISTERED PROFESSIONAL ENGINEER JOANNE VO No. E 16748 Exp. 9/30/12 ELECTRICAL STATE OF CALIFORNIA

The State of California or its officers or agents shall not be responsible for the accuracy or completeness of electronic copies of this plan sheet.

FOR ACCURATE RIGHT OF WAY AND ACCESS DATA,
CONTACT RIGHT OF WAY ENGINEERING AT THE DISTRICT OFFICE.

NOTES: (THIS SHEET ONLY)

1. FOR GENERAL NOTES, LEGEND, AND ABBREVIATIONS, SEE SHEET E-1, E-2 AND E-61.
2. PULL BOX COVERS SHALL BE MARKED AS "OCTA"

[3] SEE SHEET E-58, E-59 AND E-60 FOR SPLICING SCHEDULE AND ELEMENT SCHEMATIC.

CONDUCTOR AND CONDUIT SCHEDULE

CONDUCTOR TYPE	1	2 (STATE)	3	4	5	6
EXISTING OCTA FOC	1(E)					
TYPE C CABLE (STATE)	-	1(AB)				
4#6 POWER CABLE	1(E)					
3#4/0, 1#2					1(E)	
CONDUIT SIZE	3"(E)	4"(AB)	3"(N)	2"(N)	3"(E)	1½"(N)

(AB): ABANDON EXISTING CONDUIT OR CONDUCTOR
(E): EXISTING CONDUIT OR CONDUCTOR
(N): NEW CONDUIT OR CONDUCTOR

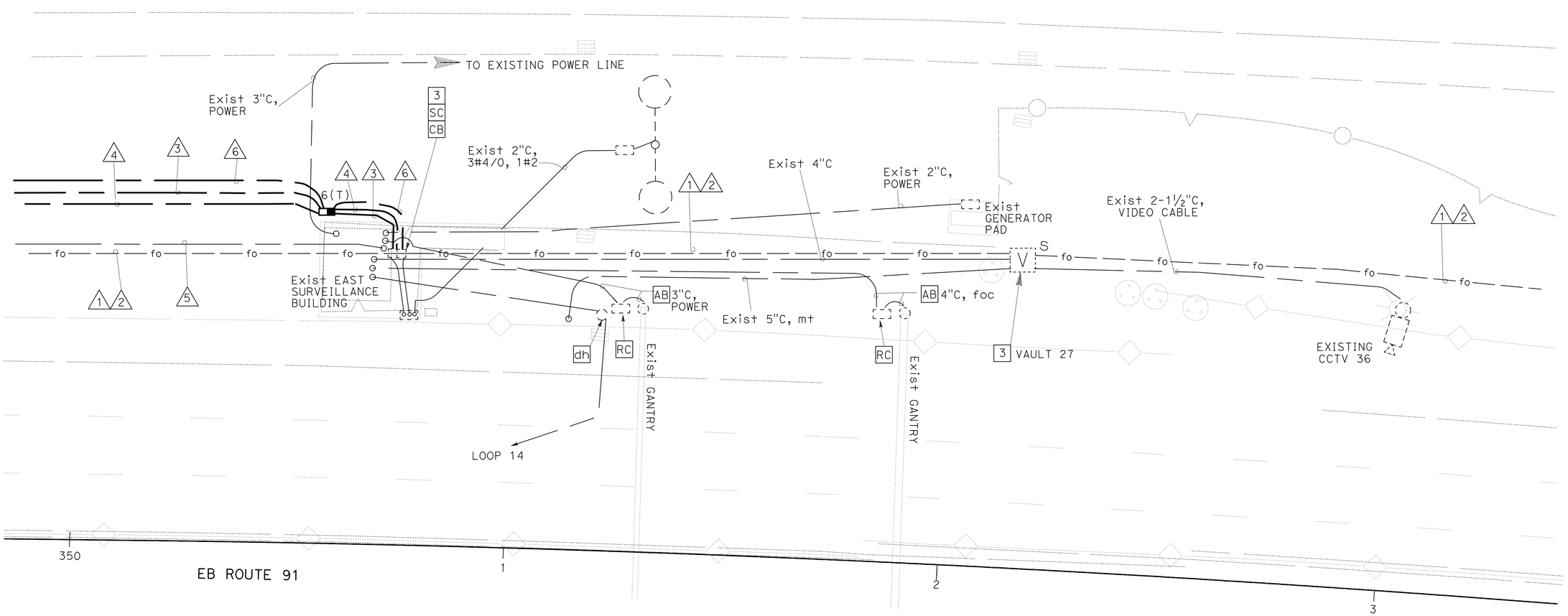

OCTA FACILITY
(DETAIL)
NO SCALE

E-86

THIS PLAN IS ACCURATE FOR ELECTRICAL WORK ONLY.

STATE OF CALIFORNIA - DEPARTMENT OF TRANSPORTATION
Caltrans ELECTRICAL DESIGN

PROJECT ENGINEER SHAHRAM SHAHRIARI
CALCULATED/DESIGNED BY JOANNE VO
CHECKED BY SHAHRAM SHAHRIARI
REVISED BY
DATE REVISED

LAST REVISION 07-01-10
DATE PLOTTED => 16-DEC-2010
TIME PLOTTED => 17:17

FOR REDUCED PLANS ORIGINAL 0 20 40 60 80
USERNAME => trphils
DGN FILE => c0g330ua088.dgn
CU 12390
EA 0G3301

DIST	COUNTY	ROUTE	POST MILE TOTAL PROJECT	SHEET No	TOTAL SHEETS
12	Ora	91	9.1/15.1	662	949

08-12-10
REGISTERED ELECTRICAL ENGINEER

10-25-10
PLANS APPROVAL DATE

REGISTERED PROFESSIONAL ENGINEER
JOANNE VO
No. E 16748
Exp. 9/30/12
ELECTRICAL
STATE OF CALIFORNIA

The State of California or its officers or agents shall not be responsible for the accuracy or completeness of electronic copies of this plan sheet.

FOR ACCURATE RIGHT OF WAY AND ACCESS DATA,
CONTACT RIGHT OF WAY ENGINEERING AT THE DISTRICT OFFICE.

NOTES: (THIS SHEET ONLY)

1. FOR GENERAL NOTES, LEGEND, AND ABBREVIATIONS, SEE SHEET E-1, E-2 AND E-61.
2. PULL BOX COVERS SHALL BE MARKED AS "OCTA".

[3] SEE SHEET E-58, E-59 AND E-60 FOR SPLICING SCHEDULE AND EQUIPMENT SCHEMATIC.

[4] SEE SHEET E-120 FOR STATE FOC REFERENCE.

[5] INSTALL CCTV POLE TYPE 30, 120 FEET DISTANCE FROM THE CLOSEST GANTRY. THIS "WEST DATA-LOGGER" CCTV ASSEMBLY SHALL BE INSTALLED BY OTHERS.

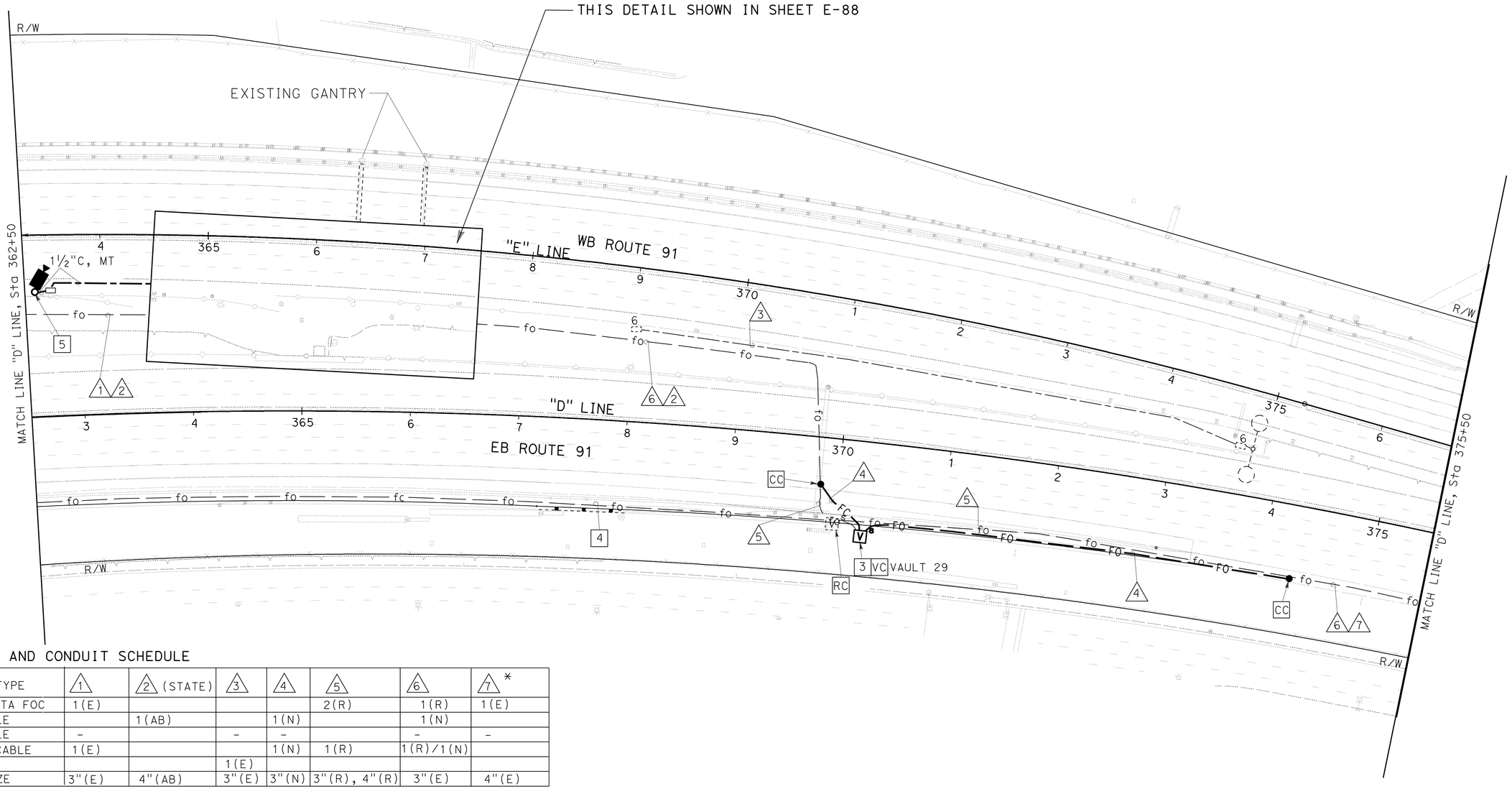

CONDUCTOR AND CONDUIT SCHEDULE

CONDUCTOR TYPE	1	2 (STATE)	3	4	5	6	7 *
EXISTING OCTA FOC	1(E)				2(R)	1(R)	1(E)
TYPE C CABLE		1(AB)		1(N)		1(N)	
TYPE D CABLE	-		-	-		-	-
4#6 POWER CABLE	1(E)			1(N)	1(R)	1(R)/1(N)	
3#4/0, 1#2			1(E)				
CONDUIT SIZE	3"(E)	4"(AB)	3"(E)	3"(N)	3"(R), 4"(R)	3"(E)	4"(E)

(AB): ABANDON EXISTING CONDUIT OR CONDUCTOR
(E): EXISTING CONDUIT OR CONDUCTOR
(N): NEW CONDUIT OR CONDUCTOR
(*): SEE SHEET E-118 FOR CALTRANS FOC REFERENCE.
(R): RC EXISTING CONDUIT OR CONDUCTOR

THIS PLAN IS ACCURATE FOR ELECTRICAL WORK ONLY.

OCTA FACILITY

SCALE: 1" = 50'

E-87

REVISED BY	DATE REVISED
JOANNE VO	SHAHRAM SHAHRIARI

CALCULATED/DESIGNED BY: JOANNE VO
CHECKED BY: SHAHRAM SHAHRIARI

PROJECT ENGINEER: SHAHRAM SHAHRIARI

STATE OF CALIFORNIA - DEPARTMENT OF TRANSPORTATION
Caltrans **ELECTRICAL DESIGN**

LAST REVISION 07-01-10
DATE PLOTTED => 16-DEC-2010
TIME PLOTTED => 17:17

FOR REDUCED PLANS ORIGINAL 0 20 40 60 80
USERNAME => trphils
DGN FILE => c0g330ua089.dgn
CU 12390
EA 0G3301

DIST	COUNTY	ROUTE	POST MILE TOTAL PROJECT	SHEET No	TOTAL SHEETS
12	Ora	91	9.1/15.1	663	949

08-12-10
REGISTERED ELECTRICAL ENGINEER

10-25-10
PLANS APPROVAL DATE

REGISTERED PROFESSIONAL ENGINEER JOANNE VO No. E 16748 Exp. 9/30/12 ELECTRICAL STATE OF CALIFORNIA

The State of California or its officers or agents shall not be responsible for the accuracy or completeness of electronic copies of this plan sheet.

FOR ACCURATE RIGHT OF WAY AND ACCESS DATA,
CONTACT RIGHT OF WAY ENGINEERING AT THE DISTRICT OFFICE.

NOTES: (THIS SHEET ONLY)

1. FOR GENERAL NOTES, LEGEND, AND ABBREVIATIONS, SEE SHEET E-1, E-2 AND E-61.
2. PULL BOX COVERS SHALL BE MARKED AS "OCTA".
3. SEE SHEET E-58, E-59 AND E-60 FOR SPLICING SCHEDULE ELEMENT SCHEMATIC.
4. ALL POWER CABLES AND FOC OF THIS SHEET ARE ASSIGNED BY OCTA UNLESS OTHERWISE NOTED.
5. INSTALL STATE-FURNISHED MODEL 334 CONTROLLER CABINET (PROVIDED BY OCTA).

CONDUCTOR AND CONDUIT SCHEDULE

CONDUCTOR TYPE	1	2 (STATE)	3
TYPE C CABLE (OCTA)			1(N)
TYPE C CABLE (STATE)	-	1(AB)	
4#6 POWER CABLE	1(E)		1(R)/1(N)
3#4/0, 1#2			
EXISTING OCTA FOC	1(E)		1(R)
CONDUIT SIZE	3"(E)	4"(AB)	3"(E)

(AB): ABANDON EXISTING CONDUIT OR CONDUCTOR
(E): EXISTING CONDUIT OR CONDUCTOR
(N): NEW CONDUIT OR CONDUCTOR
(*): DESIGNED AND INSTALLED BY OTHERS.
(R): RC EXISTING CONDUIT OR CONDUCTOR

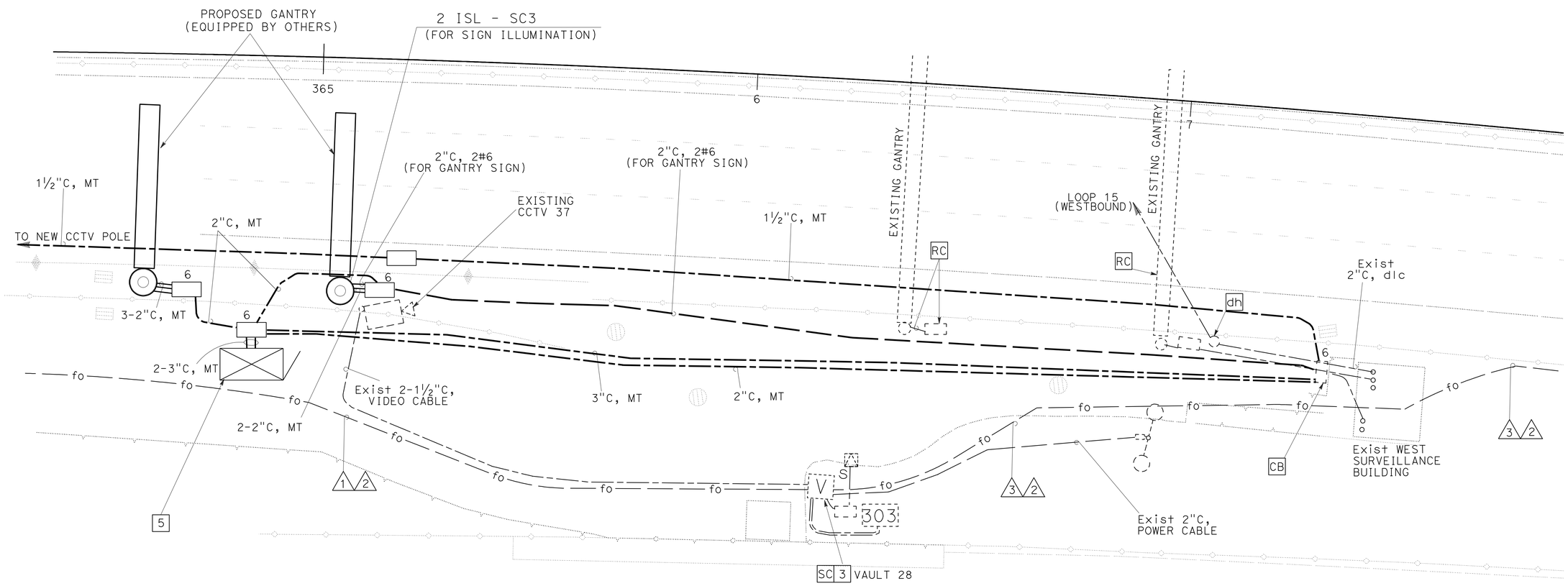

OCTA FACILITY
(DETAIL)
NO SCALE

E-88

THIS PLAN IS ACCURATE FOR ELECTRICAL WORK ONLY.

REVISED BY	DATE REVISED
JOANNE VO	SHAHRAM SHAHRIARI
CALCULATED/DESIGNED BY	CHECKED BY
PROJECT ENGINEER	SHAHRAM SHAHRIARI

STATE OF CALIFORNIA - DEPARTMENT OF TRANSPORTATION
Caltrans **ELECTRICAL DESIGN**

LAST REVISION 07-21-10 | DATE PLOTTED => 16-DEC-2010 TIME PLOTTED => 17:17

FOR REDUCED PLANS ORIGINAL 0 20 40 60 80 | USERNAME => trphils DGN FILE => c0g330ua090.dgn | CU 12390 | EA 0G3301

DIST	COUNTY	ROUTE	POST MILE TOTAL PROJECT	SHEET No	TOTAL SHEETS
12	Ora	91	9.1/15.1	664	949

REGISTERED ELECTRICAL ENGINEER 08-12-10

PLANS APPROVAL DATE 10-25-10

REGISTERED PROFESSIONAL ENGINEER JOANNE VO No. E 16748 Exp. 9/30/12 ELECTRICAL STATE OF CALIFORNIA

The State of California or its officers or agents shall not be responsible for the accuracy or completeness of electronic copies of this plan sheet.

FOR ACCURATE RIGHT OF WAY AND ACCESS DATA,
CONTACT RIGHT OF WAY ENGINEERING AT THE DISTRICT OFFICE.

NOTES: (THIS SHEET ONLY)

1. FOR GENERAL NOTES, LEGEND, AND ABBREVIATIONS, SEE SHEET E-1, E-2 AND E-61.

2. SPLICE EXISTING OCTA foc TO NEW TYPE C SMFO, FIBER TO FIBER. SEE SHEET E-58, E-59 AND E-60 FOR SPLICING SCHEDULE AND ELEMENT SCHEMATIC.

3. EXISTING 2"C, 1 TYPE D foc.

4. EXISTING 2-3"C, 2 TYPE D foc. 2#8, 28 dlc. SEE SHEET E-119 FOR REFERENCE.

5. TWO EXISTING TYPE 170 CONTROLLER ASSEMBLIES IN MODEL 334 CONTROLLER CABINET. RECONNECT EXISTING OCTA COMMUNICATIONS EQUIPMENT TO NEW FO.

6. EXISTING 2"C, 28 dlc.

CONDUCTOR AND CONDUIT SCHEDULE

CONDUCTOR TYPE	1	2 *	3
TYPE C CABLE		1(E)	1(N)
TYPE D CABLE	-		-
4#6 POWER CABLE			1(R)/1(N)
EXISTING OCTA FOC	1(E)		1(R)
CONDUIT SIZE	3"(E)	4"(E)	3"(E)

(R): RC EXISTING CONDUIT OR CONDUCTOR
(N): NEW CONDUIT OR CONDUCTOR
(E): EXISTING CONDUIT OR CONDUCTOR
(*): SEE SHEET E-119 FOR STATE FOC REFERENCE

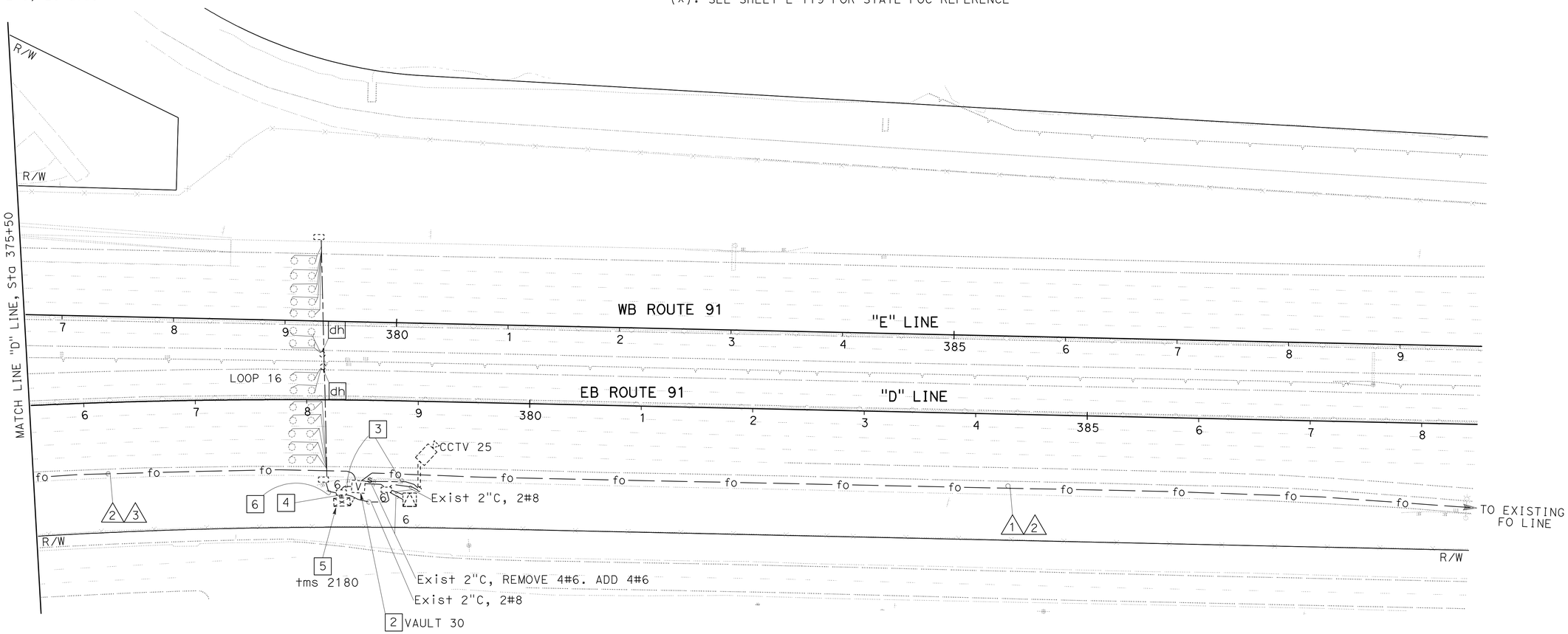

THIS PLAN IS ACCURATE FOR ELECTRICAL WORK ONLY.

OCTA FACILITY

SCALE: 1" = 50'

E-89

STATE OF CALIFORNIA - DEPARTMENT OF TRANSPORTATION
Caltrans ELECTRICAL DESIGN

PROJECT ENGINEER SHAHRAM SHAHRIARI
CALCULATED/DESIGNED BY JOANNE VO
CHECKED BY SHAHRAM SHAHRIARI
REVISED BY
DATE REVISED

LAST REVISION 07-01-10
DATE PLOTTED => 16-DEC-2010
TIME PLOTTED => 17:18

FOR REDUCED PLANS ORIGINAL 0 20 40 60 80
USERNAME => trphils
DGN FILE => c0g330ua091.dgn
CU 12390
EA 0G3301

DIST	COUNTY	ROUTE	POST MILE TOTAL PROJECT	SHEET No	TOTAL SHEETS
12	Ora	91	9.1/15.1	665	949

08-12-10
REGISTERED ELECTRICAL ENGINEER

10-25-10
PLANS APPROVAL DATE

REGISTERED PROFESSIONAL ENGINEER JOANNE VO No. E 16748 Exp. 9/30/12 ELECTRICAL STATE OF CALIFORNIA

The State of California or its officers or agents shall not be responsible for the accuracy or completeness of electronic copies of this plan sheet.

EXISTING OCTA TRANSFORMERS TO BE RELOCATED

No.	VAULT NUMBER	DIRECTION ON ROUTE 91	TRANSFORMER AT VAULT	LOAD (**)				FIBER OPTIC CABLE
				LOOP CONTROLLER (550 WATT)		LOOP CONTROLLER (550 WATT)		
			SIZE	ID	CABINET TYPE	ID	CABINET TYPE	(FOR REFERENCE)
1	48	WB	1000 VA			9	NEMA TYPE 4R	22 FIBER S/M
2	47	WB						72 FIBER S/M
3	4	EB	2000 VA	1	303	7,8	NEMA TYPE 4R	72 FIBER S/M
4	5	EB						
5	6	EB	1500 VA	2	303	10	NEMA TYPE 4R	52 FIBER S/M
6	7	EB	1500 VA	3	303	11	NEMA TYPE 4R	52 FIBER S/M
7	8	EB	750 VA			12	NEMA TYPE 4R	52 FIBER S/M
8	9	EB	1500 VA	4	303	13	NEMA TYPE 4R	52 FIBER S/M
9	10	EB	750 VA			14	NEMA TYPE 4R	52 FIBER S/M
10	11	EB	750 VA	5	334			52 FIBER S/M
11	12	EB	750 VA			15	NEMA TYPE 4R	52 FIBER S/M
12	13	EB	1500 VA	6	303	16	NEMA TYPE 4R	52 FIBER S/M
13	14	EB						52 FIBER S/M
14	15	EB	1500 VA	7	303	17	NEMA TYPE 4R	60 FIBER S/M
15	16	EB	1500 VA	8	334	18	NEMA TYPE 4R	60 FIBER S/M
16	17	EB	750 VA	9	303			60 FIBER S/M
17	19(*)	EB	750 VA	10	334			60 FIBER S/M
18	19	EB	750 VA			19	NEMA TYPE 4R	60 FIBER S/M
19	21(*)	EB	750 VA			20	NEMA TYPE 4R	60 FIBER S/M
20	21	EB	750 VA	11	334			60 FIBER S/M
21	22	EB						60 FIBER S/M
22	23	EB	1500 VA	12	303	21	NEMA TYPE 4R	60 FIBER S/M
23	24	EB	750 VA			22	NEMA TYPE 4R	60 FIBER S/M
24	25	EB	1000 VA	13	303			60 FIBER S/M
25	26	TOLL ROAD	1500 VA	14	303	23	NEMA TYPE 4R	38 S/M, 16 M/M
26	27	TOLL ROAD						32 S/M, 8 M/M
27	28	TOLL ROAD	1500 VA	15	303	24	NEMA TYPE 4R	44 FIBER S/M
28	29	EB						44 FIBER S/M
29	30	EB	1500 VA	16	334	25	NEMA TYPE 4R	44 FIBER S/M

NOTES: (THIS SHEET ONLY)

(*) EXISTING VAULT IS OBSOLETE. TRANSFORMER SPLICE TO THE CLOSEST VAULT.
(**) CONDUCTORS FOR LOOP CONTROLLER, CAMERA AND SIGN LIGHTING FROM STEP-DOWN TRANSFORMER TO LOAD SHALL BE SIZED TO ALLOW Max VOLTAGE DROP TO 2%

S/M: SINGLEMODE
M/M: MULTIMODE

THIS PLAN IS ACCURATE FOR ELECTRICAL WORK ONLY.

OCTA FACILITY
(POWER DISTRIBUTION TABLE)

E-90

STATE OF CALIFORNIA - DEPARTMENT OF TRANSPORTATION
Caltrans ELECTRICAL DESIGN

PROJECT ENGINEER SHAHRAM SHAHRIARI
CALCULATED/DESIGNED BY JOANNE VO
CHECKED BY SHAHRAM SHAHRIARI
REVISED BY
DATE REVISED

LAST REVISION 07-01-10
DATE PLOTTED => 16-DEC-2010
TIME PLOTTED => 17:18

DIST	COUNTY	ROUTE	POST MILE TOTAL PROJECT	SHEET No	TOTAL SHEETS
12	Ora	91	9.1/15.1	666	949

REGISTERED ELECTRICAL ENGINEER 08-12-10

10-25-10
PLANS APPROVAL DATE

REGISTERED PROFESSIONAL ENGINEER JOANNE VO No. E 16748 Exp. 9/30/12 ELECTRICAL STATE OF CALIFORNIA

The State of California or its officers or agents shall not be responsible for the accuracy or completeness of electronic copies of this plan sheet.

FOR ACCURATE RIGHT OF WAY AND ACCESS DATA,
CONTACT RIGHT OF WAY ENGINEERING AT THE DISTRICT OFFICE.

NOTES: (THIS SHEET ONLY)

1. FOR GENERAL NOTES, LEGEND, AND ABBREVIATIONS, SEE SHEET E-1 AND E-2.
2. SEE SHEET E-61 FOR OCTA FOC REFERENCE.

CONDUCTOR AND CONDUIT SCHEDULE

CONDUCTOR TYPE	1	2*	3*
TYPE C CABLE (STATE)	1 (E)		
TYPE C CABLE (OCTA)			1 (E)
TYPE D CABLE (OCTA)		1 (E)	
CONDUIT SIZE	4" (E)	2"(E)	3"(E)

(E): EXISTING CONDUIT OR CONDUCTOR
(*): SEE SHEET E-61.

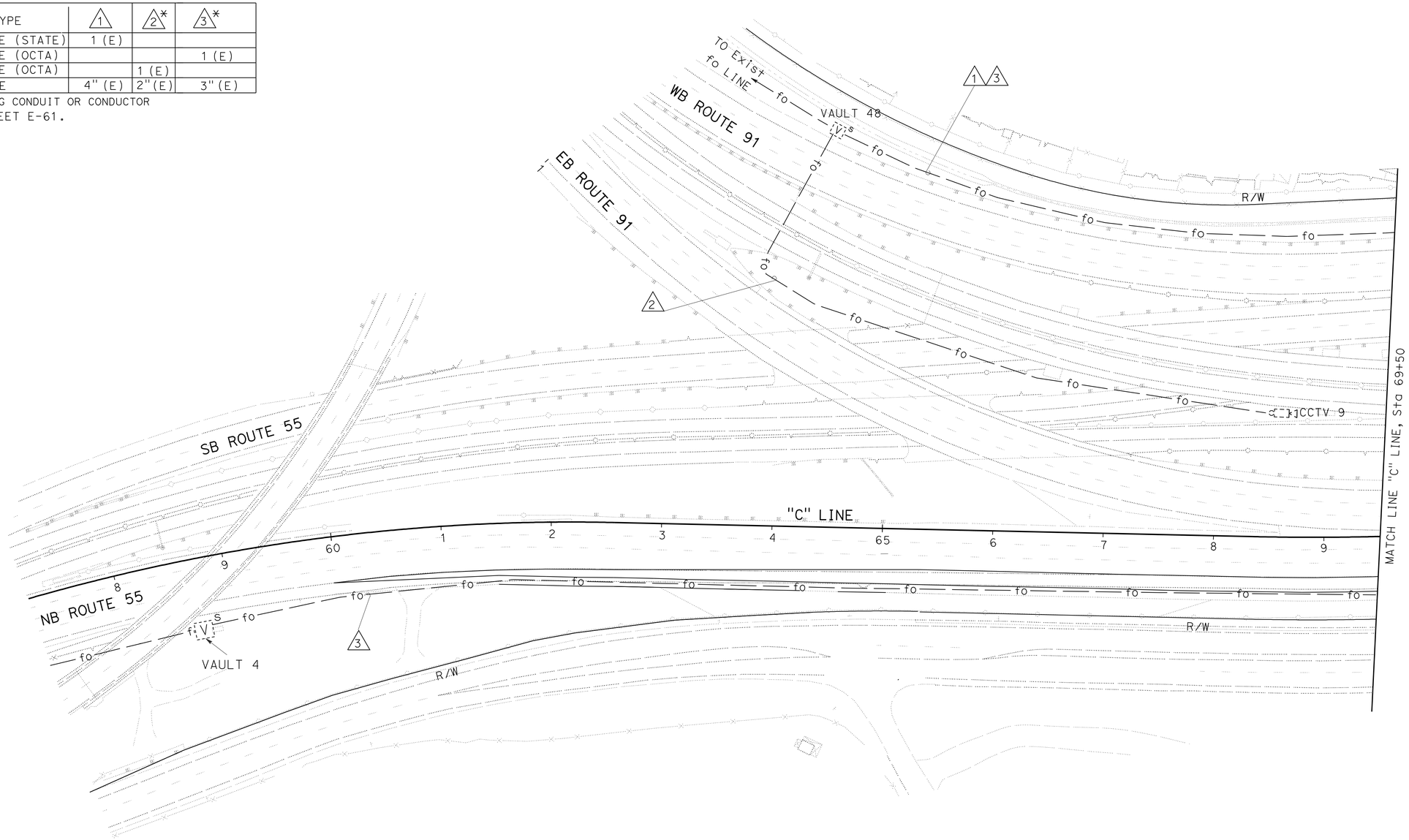

COMMUNICATION SYSTEM

SCALE: 1" = 50'

E-91

THIS PLAN IS ACCURATE FOR ELECTRICAL WORK ONLY.

STATE OF CALIFORNIA - DEPARTMENT OF TRANSPORTATION
Caltrans ELECTRICAL DESIGN

PROJECT ENGINEER SHAHRAM SHAHRIARI

CALCULATED/DESIGNED BY JOANNE VO
CHECKED BY SHAHRAM SHAHRIARI

REVISED BY
DATE REVISED

LAST REVISION 07-20-10
DATE PLOTTED => 17-DEC-2010
TIME PLOTTED => 09:55

DIST	COUNTY	ROUTE	POST MILE TOTAL PROJECT	SHEET No	TOTAL SHEETS
12	Ora	91	9.1/15.1	667	949

REGISTERED ELECTRICAL ENGINEER 08-12-10

10-25-10
PLANS APPROVAL DATE

REGISTERED PROFESSIONAL ENGINEER JOANNE VO No. E 16748 Exp. 9/30/12 ELECTRICAL STATE OF CALIFORNIA

The State of California or its officers or agents shall not be responsible for the accuracy or completeness of electronic copies of this plan sheet.

FOR ACCURATE RIGHT OF WAY AND ACCESS DATA,
CONTACT RIGHT OF WAY ENGINEERING AT THE DISTRICT OFFICE.

NOTES: (THIS SHEET ONLY)

1. SPLICE 1 EXISTING TYPE C foc TO NEW TYPE C FOC, FIBER TO FIBER.
2. FOR GENERAL NOTES, LEGEND, AND ABBREVIATIONS, SEE SHEET E-1 AND E-2.
3. SEE SHEET E-62 FOR OCTA FOC REFERENCE.

CONDUCTOR AND CONDUIT SCHEDULE

CONDUCTOR TYPE	1	2*	3	4
TYPE C CABLE (OCTA)		1(E)		
TYPE C CABLE (STATE)	1(E)		1(R)/1(N)	1 (N)
TYPE D CABLE				
CONDUIT SIZE	4"(E)	3"(E)	4"(E)	4"(N)

(R): RC CONDUIT OR CONDUCTOR
(E): EXISTING CONDUIT OR CONDUCTOR
(N): NEW CONDUIT OR CONDUCTOR
(*): SEE SHEET E-62

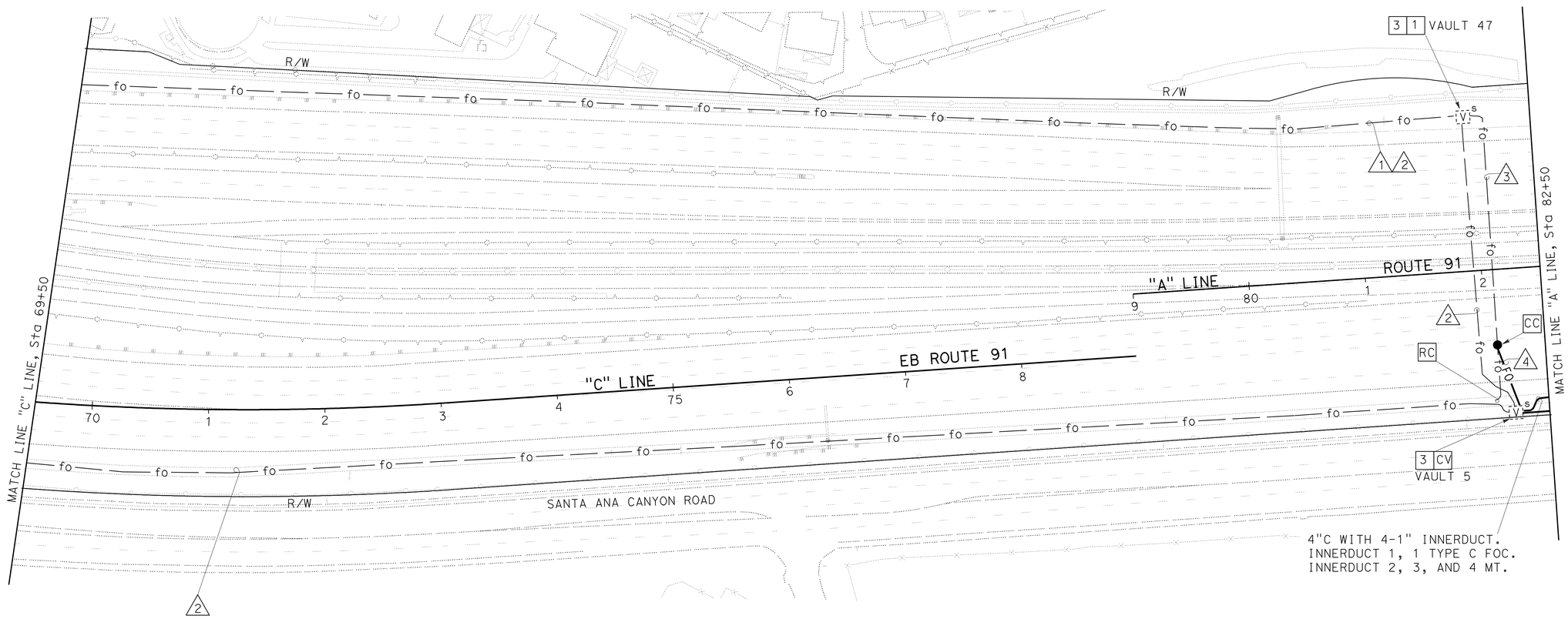

COMMUNICATION SYSTEM

SCALE: 1" = 50'

THIS PLAN IS ACCURATE FOR ELECTRICAL WORK ONLY.

E-92

REVISED BY	DATE REVISED
JOANNE VO	SHAHRAM SHAHRIARI
CALCULATED/DESIGNED BY	CHECKED BY
PROJECT ENGINEER	SHAHRAM SHAHRIARI

STATE OF CALIFORNIA - DEPARTMENT OF TRANSPORTATION
Caltrans
ELECTRICAL DESIGN

LAST REVISION 07-20-10 | DATE PLOTTED => 17-DEC-2010 TIME PLOTTED => 09:55

FOR REDUCED PLANS ORIGINAL 0 20 40 60 80

USERNAME => trmikesl
DGN FILE => c0g330ua094.dgn

CU 12390 | EA 0G3301

DIST	COUNTY	ROUTE	POST MILE TOTAL PROJECT	SHEET No	TOTAL SHEETS
12	Ora	91	9.1/15.1	668	949

08-12-10
REGISTERED ELECTRICAL ENGINEER

10-25-10
PLANS APPROVAL DATE

REGISTERED PROFESSIONAL ENGINEER
JOANNE VO
No. E 16748
Exp. 9/30/12
ELECTRICAL
STATE OF CALIFORNIA

The State of California or its officers or agents shall not be responsible for the accuracy or completeness of electronic copies of this plan sheet.

FOR ACCURATE RIGHT OF WAY AND ACCESS DATA,
CONTACT RIGHT OF WAY ENGINEERING AT THE DISTRICT OFFICE.

NOTE: (THIS SHEET ONLY)

FOR GENERAL NOTES, LEGEND, AND ABBREVIATIONS, SEE SHEET E-1 AND E-2.

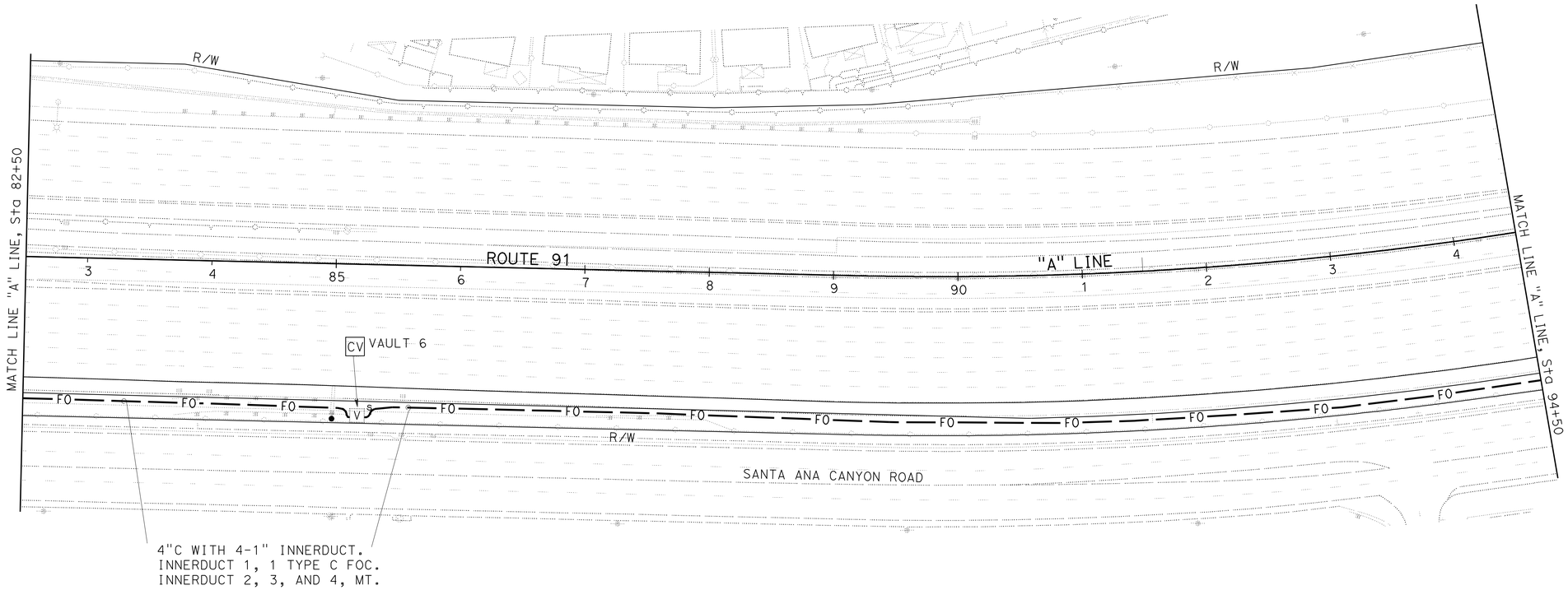

COMMUNICATION SYSTEM

SCALE: 1" = 50'

THIS PLAN IS ACCURATE FOR ELECTRICAL WORK ONLY.

E-93

REVISED BY	DATE REVISED

CALCULATED/DESIGNED BY	JOANNE VO
CHECKED BY	SHAHRAM SHAHRIARI

PROJECT ENGINEER
SHAHRAM SHAHRIARI

STATE OF CALIFORNIA - DEPARTMENT OF TRANSPORTATION
Caltrans
ELECTRICAL DESIGN

LAST REVISION 07-20-10
DATE PLOTTED => 16-DEC-2010
TIME PLOTTED => 17:18

FOR REDUCED PLANS ORIGINAL 0 20 40 60 80
USERNAME => trphils
DGN FILE => c0g330ua095.dgn
CU 12390
EA 0G3301

DIST	COUNTY	ROUTE	POST MILE TOTAL PROJECT	SHEET No	TOTAL SHEETS
12	Ora	91	9.1/15.1	669	949

08-12-10
REGISTERED ELECTRICAL ENGINEER

10-25-10
PLANS APPROVAL DATE

REGISTERED PROFESSIONAL ENGINEER
JOANNE VO
No. E 16748
Exp. 9/30/12
ELECTRICAL
STATE OF CALIFORNIA

The State of California or its officers or agents shall not be responsible for the accuracy or completeness of electronic copies of this plan sheet.

FOR ACCURATE RIGHT OF WAY AND ACCESS DATA,
CONTACT RIGHT OF WAY ENGINEERING AT THE DISTRICT OFFICE.

NOTES: (THIS SHEET ONLY)

1. SEE E-59 AND E-120 FOR SPLICING SCHEDULE.
2. EXISTING CONDUIT, REMOVE EXISTING 1 TYPE D foc. ADD 1 TYPE D FOC.
3. FOR GENERAL NOTES, LEGEND, AND ABBREVIATIONS, SEE SHEET E-1 AND E-2.
4. EXISTING MODEL 170 CONTROLLER IN MODEL 332 CONTROLLER CABINET. INSTALL 1 EES, 1 DE, 1 FDU.
5. 2"C, 1 TYPE D FOC.
6. EXISTING 2-3"C, ADD 1 TYPE D FOC.

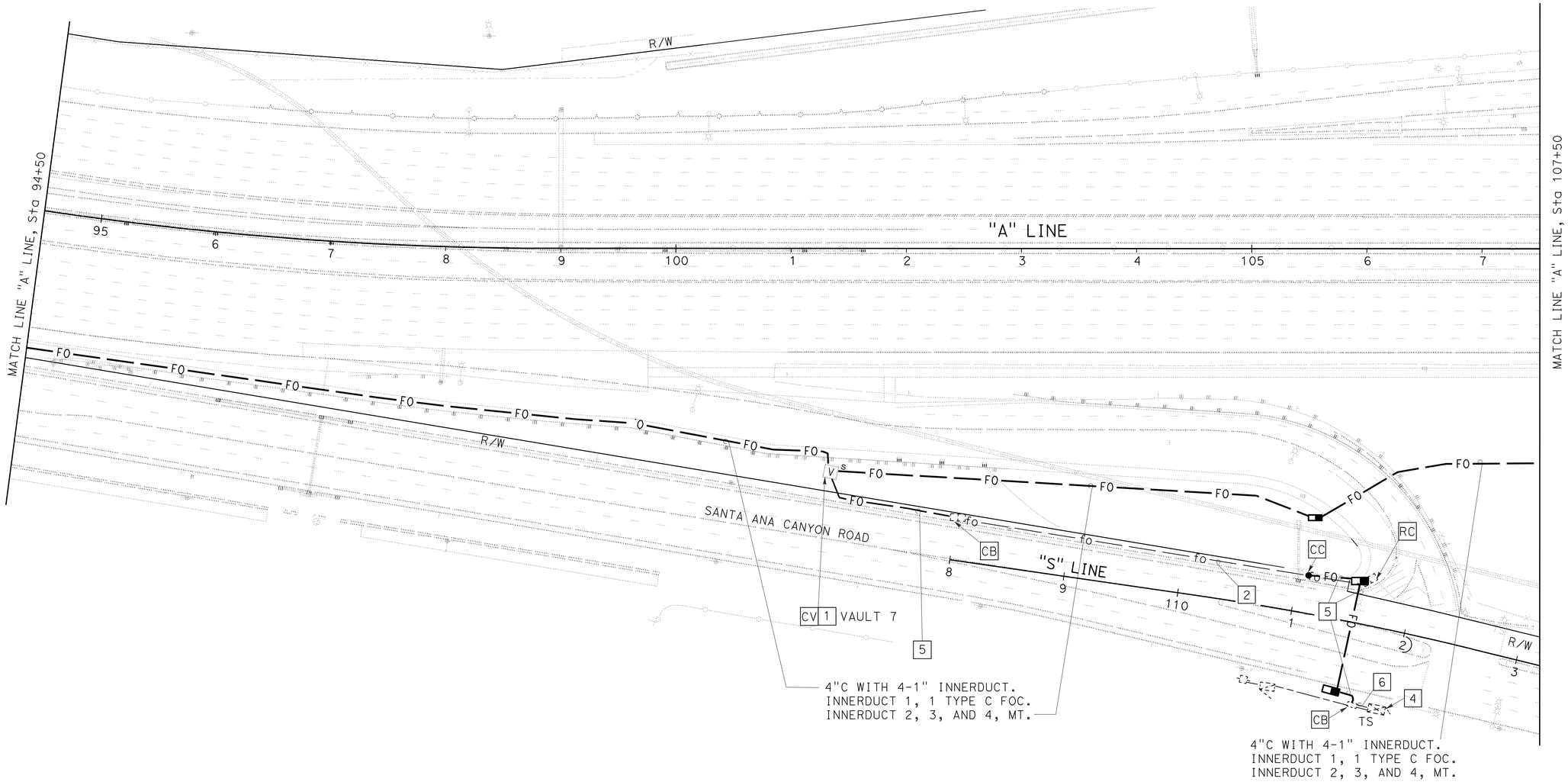

COMMUNICATION SYSTEM

SCALE: 1" = 50'

THIS PLAN IS ACCURATE FOR ELECTRICAL WORK ONLY.

E-94

REVISED BY	DATE REVISED
JOANNE VO	SHAHRAM SHAHRIARI

CALCULATED/DESIGNED BY: JOANNE VO
CHECKED BY: SHAHRAM SHAHRIARI

PROJECT ENGINEER: SHAHRAM SHAHRIARI

STATE OF CALIFORNIA - DEPARTMENT OF TRANSPORTATION
Caltrans
ELECTRICAL DESIGN

LAST REVISION 07-20-10
DATE PLOTTED => 17-DEC-2010
TIME PLOTTED => 09:55

FOR REDUCED PLANS ORIGINAL 0 20 40 60 80

USERNAME => trmikesl
DGN FILE => c0g330ua096.dgn

CU 12390

EA 0G3301

DIST	COUNTY	ROUTE	POST MILE TOTAL PROJECT	SHEET No	TOTAL SHEETS
12	Ora	91	9.1/15.1	670	949

REGISTERED ELECTRICAL ENGINEER 11-23-10

PLANS APPROVAL DATE 10-25-10

REGISTERED PROFESSIONAL ENGINEER JOANNE VO No. E 16748 Exp. 9/30/12 ELECTRICAL STATE OF CALIFORNIA

The State of California or its officers or agents shall not be responsible for the accuracy or completeness of electronic copies of this plan sheet.

FOR ACCURATE RIGHT OF WAY AND ACCESS DATA,
CONTACT RIGHT OF WAY ENGINEERING AT THE DISTRICT OFFICE.

NOTES: (THIS SHEET ONLY)

1. SEE E-59 AND E-120 FOR SPLICING SCHEDULE.
2. EXISTING MODEL 170 CONTROLLER IN MODEL 334 CONTROLLER CABINET. INSTALL 1 EES, 1 DE, 1 FDU.
3. REMOVE 1 TYPE D foc. ADD 1 TYPE D FOC TO EXISTING 2-3"C. SEE RMS REFERENCE IN E-126.

4. FOR GENERAL NOTES, LEGEND, AND ABBREVIATIONS, SEE SHEET E-1 AND E-2.

CONDUCTOR AND CONDUIT SCHEDULE

CONDUCTOR TYPE	1 (*)	2	3	4	5	6
TYPE C CABLE (OCTA)	1(E)	-	-			
TYPE C CABLE (STATE)	-	1(R)/1(N)	1(R)/1(N)	1(N)	1(N)	-
4#6 POWER CABLE	1(E)	-	-	-	-	-
TYPE D CABLE (STATE)		1(R)/1(N)	2(R)/1(N)	-	1(N)	1(N)
CONDUIT SIZE	3"(E)	4"(E)	4"(E)	4"(N)	4"(N)	2"(N)

(R): RC EXISTING CONDUIT OR CONDUCTOR
(N): NEW CONDUIT OR CONDUCTOR
(E): EXISTING CONDUIT OR CONDUCTOR
(*): SEE REFERENCE IN SHEET E-65

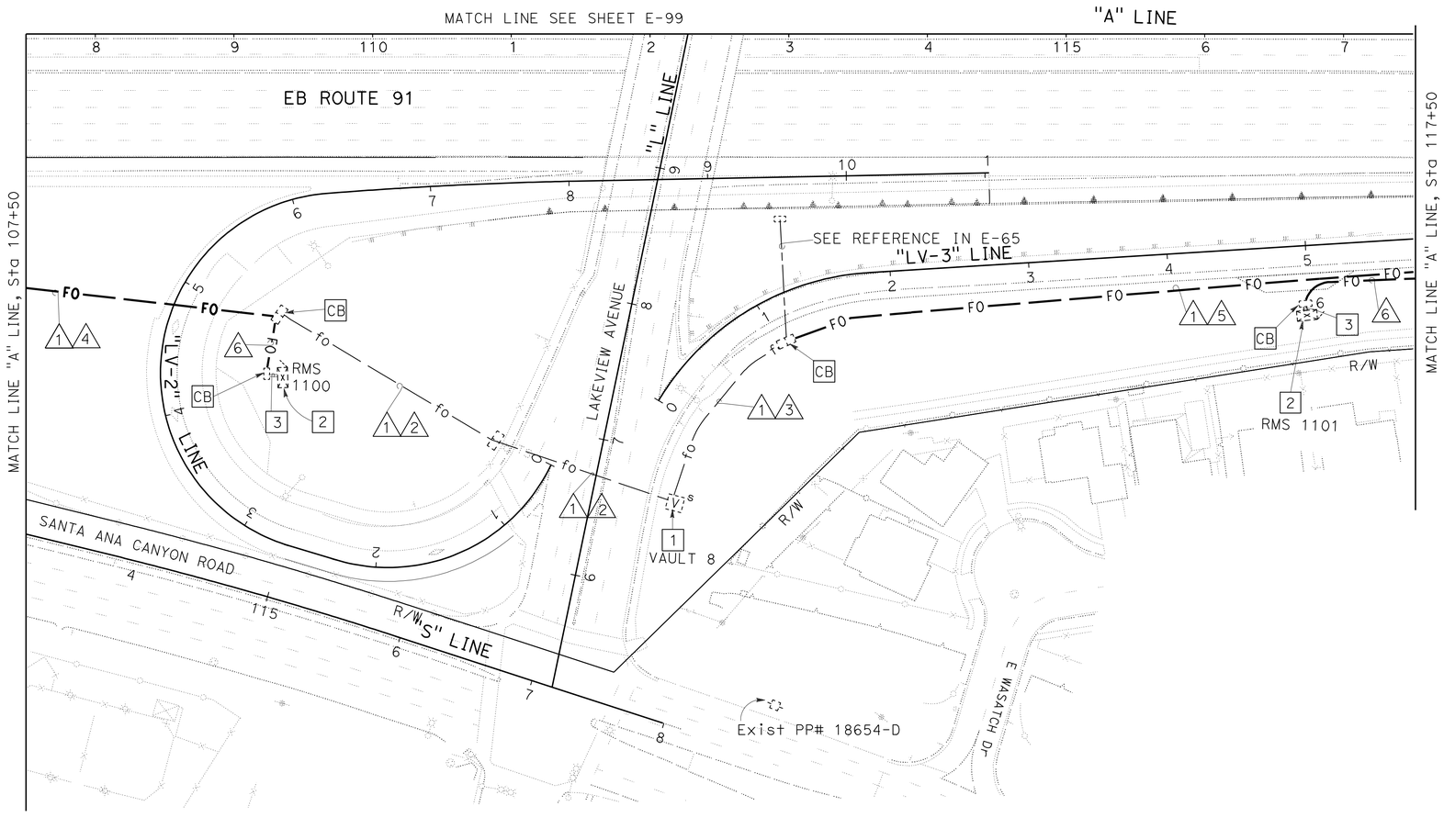

COMMUNICATION SYSTEM

SCALE: 1" = 50'

E-95

THIS PLAN IS ACCURATE FOR ELECTRICAL WORK ONLY.

REVISED BY	DATE REVISED
JOANNE VO	SHAHRAM SHAHRIARI

CALCULATED/DESIGNED BY JOANNE VO
CHECKED BY SHAHRAM SHAHRIARI

PROJECT ENGINEER SHAHRAM SHAHRIARI

STATE OF CALIFORNIA - DEPARTMENT OF TRANSPORTATION
Caltrans
ELECTRICAL DESIGN

LAST REVISION 07-20-10
DATE PLOTTED => 17-DEC-2010
TIME PLOTTED => 09:55

FOR ACCURATE RIGHT OF WAY AND ACCESS DATA,
CONTACT RIGHT OF WAY ENGINEERING AT THE DISTRICT OFFICE.

CONDUCTOR AND CONDUIT SCHEDULE

CONDUCTOR TYPE	1	2	3	4	5
TYPE C CABLE	1(N)	1(N)			
TYPE D CABLE	4(N)	1(N)	4(N)	1(R)	1(N)
CONDUIT SIZE	4"(N)	4"(N)	2"(N)	2"(R)	2"(R)

(R): RC EXISTING CONDUIT OR CONDUCTOR
(N): NEW CONDUIT OR CONDUCTOR
(E): EXISTING CONDUIT OR CONDUCTOR

DIST	COUNTY	ROUTE	POST MILE TOTAL PROJECT	SHEET No	TOTAL SHEETS
12	Ora	91	9.1/15.1	671	949

08-12-10
REGISTERED ELECTRICAL ENGINEER

10-25-10
PLANS APPROVAL DATE

REGISTERED PROFESSIONAL ENGINEER JOANNE VO No. E 16748 Exp. 9/30/12 ELECTRICAL STATE OF CALIFORNIA

The State of California or its officers or agents shall not be responsible for the accuracy or completeness of electronic copies of this plan sheet.

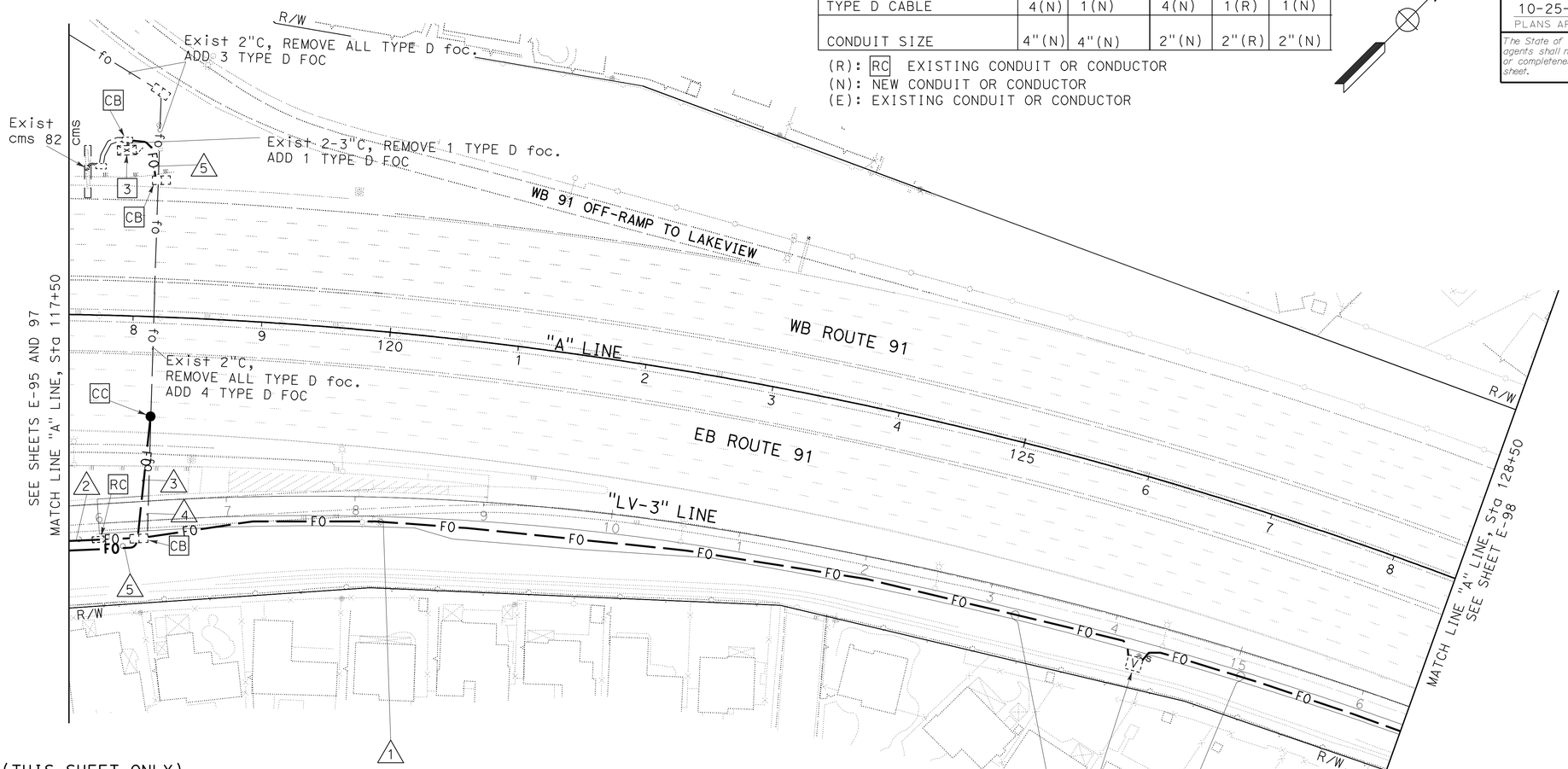

1 CV VAULT 9

4"C WITH 4-1' INNERDUCT.
INNERDUCT 1, 1 TYPE C FOC.
INNERDUCT 2, 3, AND 4, MT.

NOTES: (THIS SHEET ONLY)

1. FOR FOC SPLICING ASSIGNMENT, SEE SHEET E-120.
FOR ELEMENTS SCHEMATIC, SEE SHEET E-59 AND E-60.

2. FOR GENERAL NOTES, LEGEND, AND ABBREVIATIONS, SEE SHEET E-1 AND E-2.

3. EXISTING MODEL 170 CONTROLLER IN MODEL 334 CONTROLLER CABINET. INSTALL 1 EES, 1 DE, 1 FDU.
SEE CONTROLLER INTERFACE IN SHEET E-121.

4. FOR RMS REFERENCE, SEE SHEET E-126.

COMMUNICATION SYSTEM

SCALE: 1" = 50'

E-96

THIS PLAN IS ACCURATE FOR ELECTRICAL WORK ONLY.

REVISED BY	DATE REVISED
JOANNE VO	SHAHRAM SHAHRIARI
CALCULATED/DESIGNED BY	CHECKED BY
PROJECT ENGINEER	SHAHRIARI

STATE OF CALIFORNIA - DEPARTMENT OF TRANSPORTATION
Caltrans
ELECTRICAL DESIGN

LAST REVISION 07-20-10 | DATE PLOTTED => 16-DEC-2010 | TIME PLOTTED => 17:18

FOR REDUCED PLANS ORIGINAL 0 20 40 60 80

USERNAME => trphils
DGN FILE => c0g330ua098.dgn

CU 12390 | EA 0G3301

DIST	COUNTY	ROUTE	POST MILE TOTAL PROJECT	SHEET No	TOTAL SHEETS
12	Ora	91	9.1/15.1	672	949

08-12-10
REGISTERED ELECTRICAL ENGINEER

10-25-10
PLANS APPROVAL DATE

REGISTERED PROFESSIONAL ENGINEER JOANNE VO No. E 16748 Exp. 9/30/12 ELECTRICAL STATE OF CALIFORNIA

The State of California or its officers or agents shall not be responsible for the accuracy or completeness of electronic copies of this plan sheet.

FOR ACCURATE RIGHT OF WAY AND ACCESS DATA,
CONTACT RIGHT OF WAY ENGINEERING AT THE DISTRICT OFFICE.

NOTES: (THIS SHEET ONLY)

1. RC EXISTING TELEPHONE DEMARCATION CABINET.
2. EXISTING 2"C, REMOVE EXISTING 4#18 TELEPHONE CABLE. ADD 1 TYPE D FO CABLE TO EXISTING CONDUIT.
3. Exist 2"C. REMOVE ALL EXISTING TYPE D foc. ADD 3 TYPE D FOC.
4. Exist 2-3"C. REMOVE 1 TYPE D foc. ADD 1 TYPE D FOC.
5. 2"C, 1 TYPE D FOC.
6. 2"C, 2 TYPE D FOC.
7. EXISTING MODEL 170 CONTROLLER IN MODEL 332 CONTROLLER CABINET. INSTALL 1 EES, 1 DE, 1 FDU.
8. FOR GENERAL NOTES, LEGEND, AND ABBREVIATIONS, SEE SHEET E-1 AND E-2.
9. EXISTING MODEL 170 CONTROLLER IN MODEL 334 CONTROLLER CABINET. INSTALL 1 EES, 1 DE, 1 FDU.

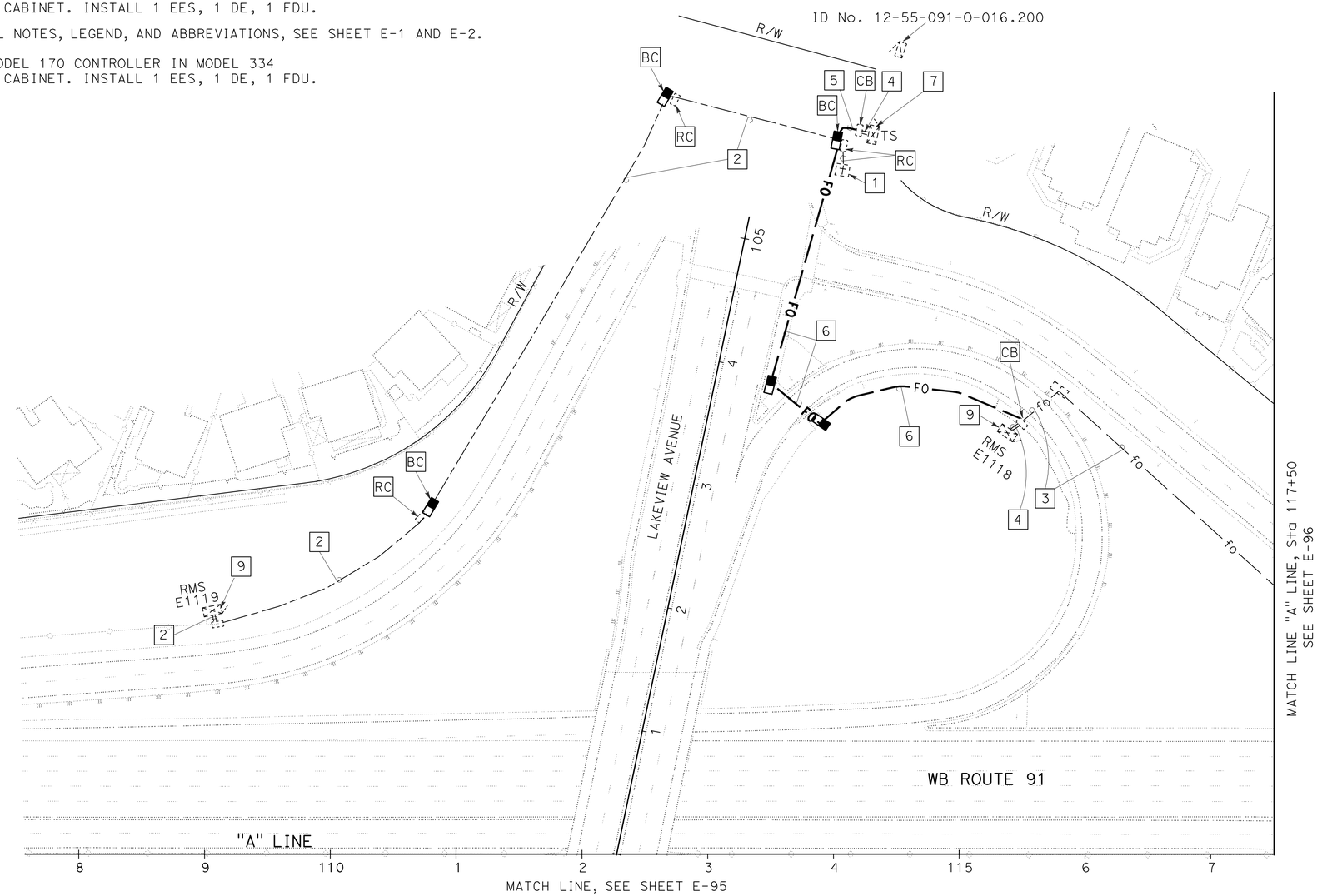

COMMUNICATION SYSTEM

SCALE: 1" = 50'

E-97

THIS PLAN IS ACCURATE FOR ELECTRICAL WORK ONLY.

NOTE: There is no roadway widening on this sheet.

FOR REDUCED PLANS ORIGINAL 0 20 40 60 80

USERNAME => trphils
DGN FILE => c0g330ua099.dgn

CU 12390

EA 0G3301

LAST REVISION 07-20-10

DATE PLOTTED => 16-DEC-2010
TIME PLOTTED => 17:18

STATE OF CALIFORNIA - DEPARTMENT OF TRANSPORTATION
Caltrans
ELECTRICAL DESIGN

PROJECT ENGINEER SHAHRAM SHAHRIARI

CALCULATED/DESIGNED BY JOANNE VO
CHECKED BY SHAHRAM SHAHRIARI

REVISED BY
DATE REVISED

DIST	COUNTY	ROUTE	POST MILE TOTAL PROJECT	SHEET No	TOTAL SHEETS
12	Ora	91	9.1/15.1	673	949

REGISTERED ELECTRICAL ENGINEER 08-12-10

10-25-10
PLANS APPROVAL DATE

REGISTERED PROFESSIONAL ENGINEER
JOANNE VO
No. E 16748
Exp. 9/30/12
ELECTRICAL
STATE OF CALIFORNIA

The State of California or its officers or agents shall not be responsible for the accuracy or completeness of electronic copies of this plan sheet.

FOR ACCURATE RIGHT OF WAY AND ACCESS DATA,
CONTACT RIGHT OF WAY ENGINEERING AT THE DISTRICT OFFICE.

NOTES: (THIS SHEET ONLY)

FOR GENERAL NOTES, LEGEND, AND ABBREVIATIONS, SEE SHEET E-1 AND E-2.

COMMUNICATION SYSTEM

SCALE: 1" = 50'

E-98

THIS PLAN IS ACCURATE FOR ELECTRICAL WORK ONLY.

REVISED BY	
DATE REVISED	
CALCULATED/DESIGNED BY	JOANNE VO
CHECKED BY	SHAHRAM SHAHRIARI
PROJECT ENGINEER	SHAHRAM SHAHRIARI

STATE OF CALIFORNIA - DEPARTMENT OF TRANSPORTATION
Caltrans
ELECTRICAL DESIGN

LAST REVISION 07-20-10
DATE PLOTTED => 16-DEC-2010
TIME PLOTTED => 17:19

FOR ACCURATE RIGHT OF WAY AND ACCESS DATA,
CONTACT RIGHT OF WAY ENGINEERING AT THE DISTRICT OFFICE.

DIST	COUNTY	ROUTE	POST MILE TOTAL PROJECT	SHEET No	TOTAL SHEETS
12	Ora	91	9.1/15.1	674	949

08-12-10
REGISTERED ELECTRICAL ENGINEER

10-25-10
PLANS APPROVAL DATE

REGISTERED PROFESSIONAL ENGINEER
JOANNE VO
No. E 16748
Exp. 9/30/12
ELECTRICAL
STATE OF CALIFORNIA

The State of California or its officers or agents shall not be responsible for the accuracy or completeness of electronic copies of this plan sheet.

CONDUCTOR AND CONDUIT SCHEDULE

CONDUCTOR TYPE	1	2
TYPE C CABLE	1(N)	
TYPE D CABLE	-	1(N)
CONDUIT SIZE	4"(N)	2"(N)

(N): NEW CONDUIT OR CONDUCTOR

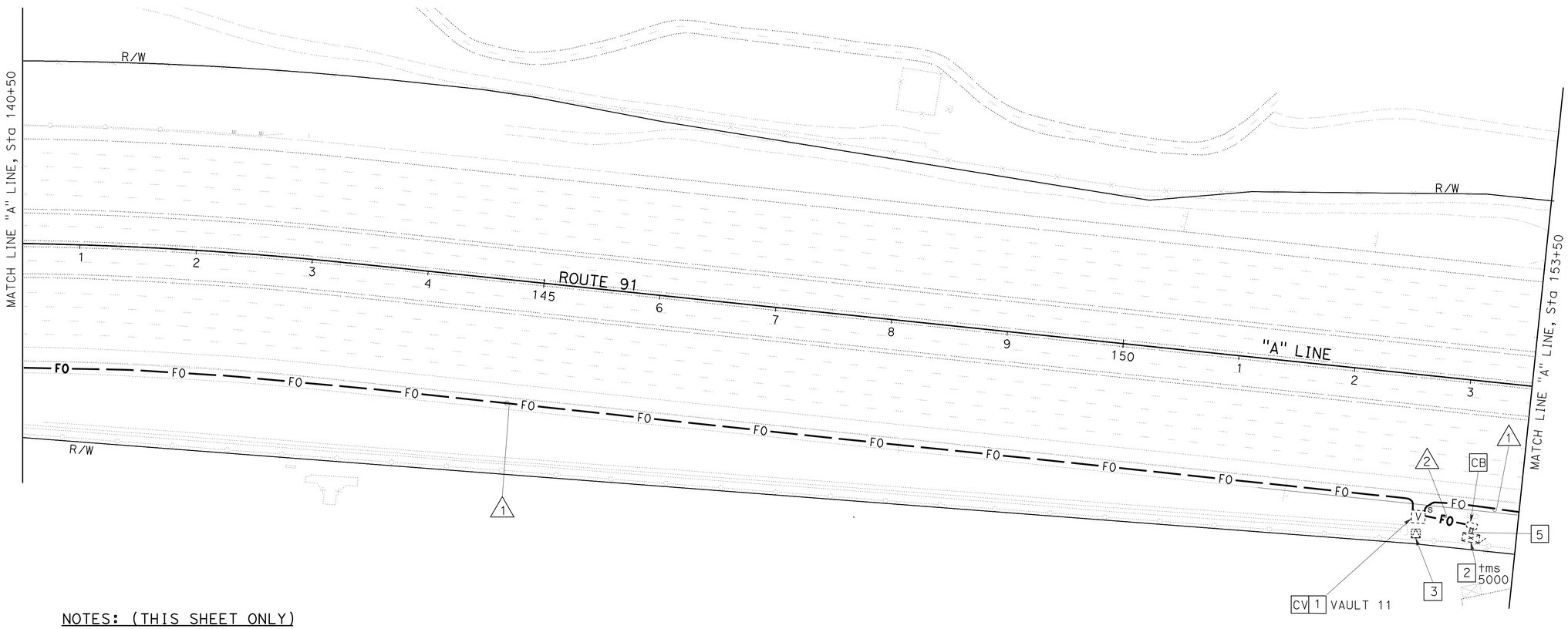

NOTES: (THIS SHEET ONLY)

1. SEE SHEET E-59 AND E-120 FOR SPLICING SCHEDULE.
2. TWO EXISTING MODEL 170 CONTROLLER ASSEMBLIES IN MODEL 334 CONTROLLER CABINET. REMOVE EXISTING STATE COMMUNICATION EQUIPMENT. INSTALL 1 EES, 1 DE, 1 FDU. SEE CONTROLLER INTERFACE IN SHEET E-121.
3. EXISTING STEP DOWN TRANSFORMER, SEE SHEET E-68 FOR REFERENCE.
4. FOR GENERAL NOTES, LEGEND, AND ABBREVIATIONS, SEE SHEET E-1 AND E-2.
5. ADD 1 TYPE D FOC TO EXISTING CONDUIT. SEE SHEET E-134 FOR TMS REFERENCE.

COMMUNICATION SYSTEM

SCALE: 1" = 50'

THIS PLAN IS ACCURATE FOR ELECTRICAL WORK ONLY.

E-99

STATE OF CALIFORNIA - DEPARTMENT OF TRANSPORTATION
Caltrans
ELECTRICAL DESIGN

PROJECT ENGINEER SHAHRAM SHAHRIARI
CALCULATED/DESIGNED BY JOANNE VO
CHECKED BY SHAHRAM SHAHRIARI
REVISED BY
DATE REVISED

LAST REVISION 07-20-10
DATE PLOTTED => 17-DEC-2010
TIME PLOTTED => 09:55

DIST	COUNTY	ROUTE	POST MILE TOTAL PROJECT	SHEET No	TOTAL SHEETS
12	Ora	91	9.1/15.1	675	949

08-12-10
REGISTERED ELECTRICAL ENGINEER

10-25-10
PLANS APPROVAL DATE

REGISTERED PROFESSIONAL ENGINEER
JOANNE VO
No. E 16748
Exp. 9/30/12
ELECTRICAL
STATE OF CALIFORNIA

The State of California or its officers or agents shall not be responsible for the accuracy or completeness of electronic copies of this plan sheet.

FOR ACCURATE RIGHT OF WAY AND ACCESS DATA,
CONTACT RIGHT OF WAY ENGINEERING AT THE DISTRICT OFFICE.

NOTES: (THIS SHEET ONLY)

FOR GENERAL NOTES, LEGEND, AND ABBREVIATIONS, SEE SHEET E-1 AND E-2.

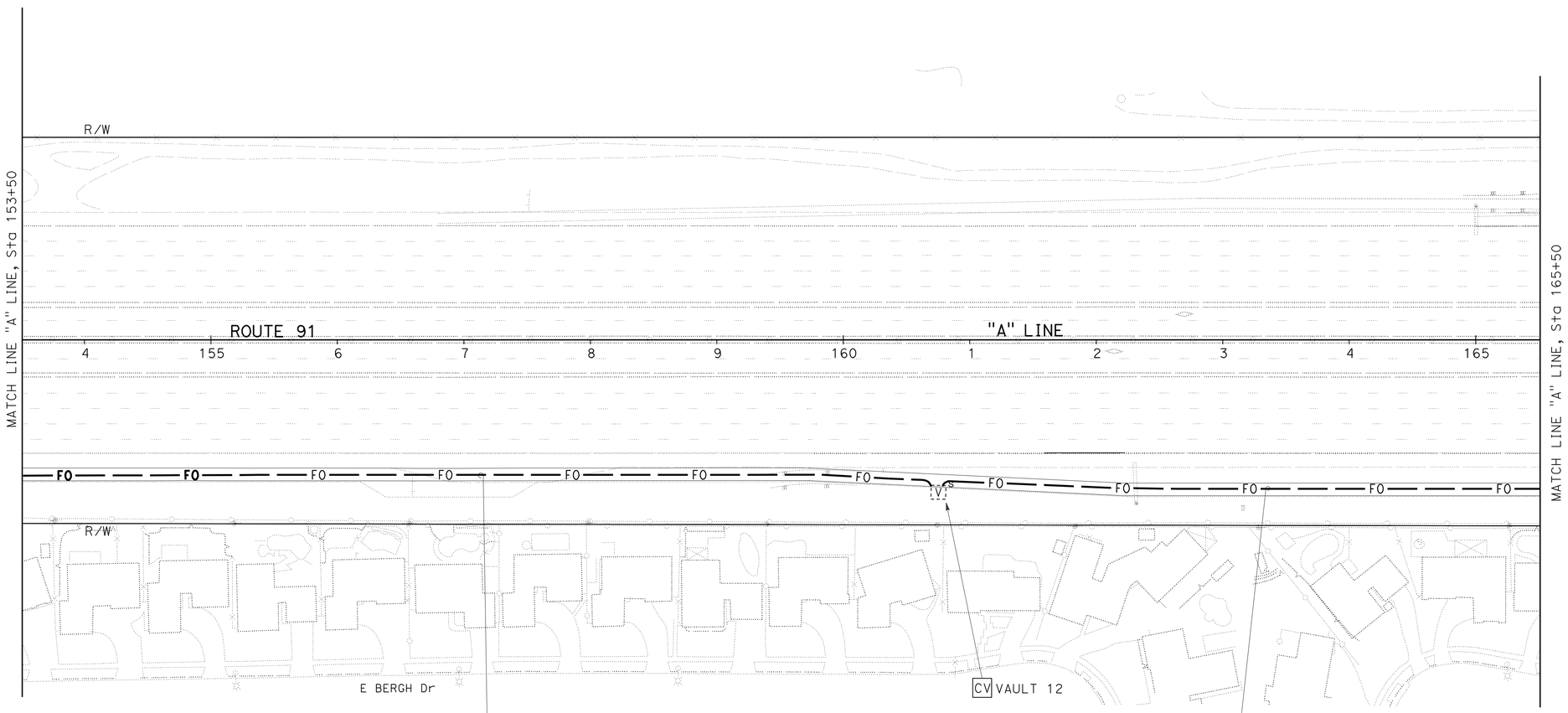

COMMUNICATION SYSTEM

SCALE: 1" = 50'

THIS PLAN IS ACCURATE FOR ELECTRICAL WORK ONLY.

E-100

REVISED BY	DATE REVISED

CALCULATED/DESIGNED BY	JOANNE VO
CHECKED BY	SHAHRAM SHAHRIARI

PROJECT ENGINEER
SHAHRAM SHAHRIARI

STATE OF CALIFORNIA - DEPARTMENT OF TRANSPORTATION
Caltrans®
ELECTRICAL DESIGN

LAST REVISION 07-20-10
DATE PLOTTED => 16-DEC-2010
TIME PLOTTED => 17:19

FOR ACCURATE RIGHT OF WAY AND ACCESS DATA,
CONTACT RIGHT OF WAY ENGINEERING AT THE DISTRICT OFFICE.

DIST	COUNTY	ROUTE	POST MILE TOTAL PROJECT	SHEET No	TOTAL SHEETS
12	Ora	91	9.1/15.1	676	949

08-12-10
REGISTERED ELECTRICAL ENGINEER

10-25-10
PLANS APPROVAL DATE

REGISTERED PROFESSIONAL ENGINEER
JOANNE VO
No. E 16748
Exp. 9/30/12
ELECTRICAL
STATE OF CALIFORNIA

The State of California or its officers or agents shall not be responsible for the accuracy or completeness of electronic copies of this plan sheet.

NOTES: (THIS SHEET ONLY)

FOR GENERAL NOTES, LEGEND, AND ABBREVIATIONS, SEE SHEET E-1 AND E-2.

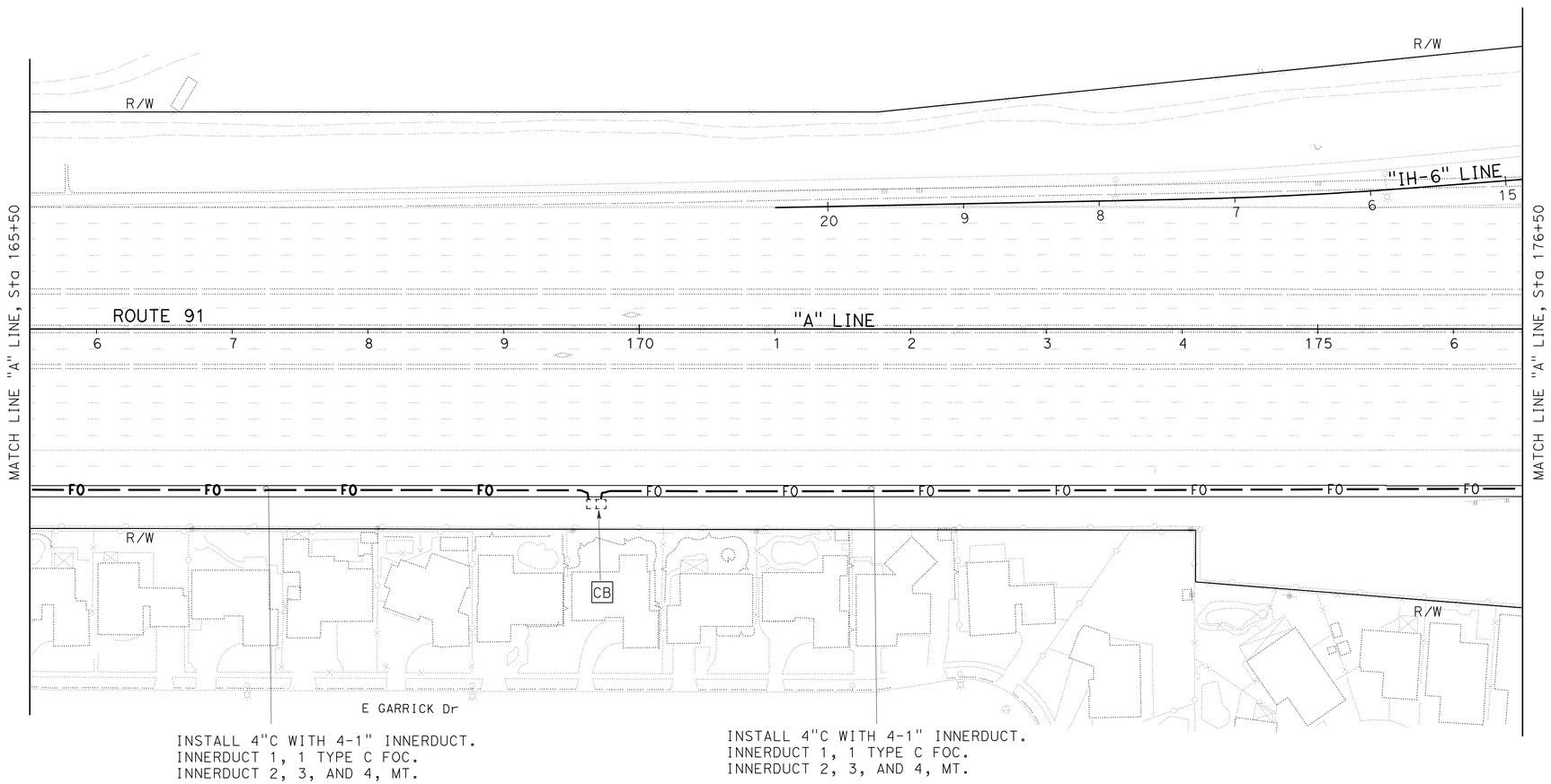

COMMUNICATION SYSTEM

SCALE: 1" = 50'

E-101

THIS PLAN IS ACCURATE FOR ELECTRICAL WORK ONLY.

CALCULATED/DESIGNED BY	JOANNE VO
CHECKED BY	SHAHRAM SHAHRIARI
REVISED BY	
DATE REVISED	

PROJECT ENGINEER
SHAHRAM SHAHRIARI

STATE OF CALIFORNIA - DEPARTMENT OF TRANSPORTATION
Caltrans®
ELECTRICAL DESIGN

LAST REVISION 07-20-10
DATE PLOTTED => 16-DEC-2010
TIME PLOTTED => 17:19

FOR ACCURATE RIGHT OF WAY AND ACCESS DATA,
CONTACT RIGHT OF WAY ENGINEERING AT THE DISTRICT OFFICE.

DIST	COUNTY	ROUTE	POST MILE TOTAL PROJECT	SHEET No	TOTAL SHEETS
12	Ora	91	9.1/15.1	677	949

08-12-10
REGISTERED ELECTRICAL ENGINEER

10-25-10
PLANS APPROVAL DATE

REGISTERED PROFESSIONAL ENGINEER
JOANNE VO
No. E 16748
Exp. 9/30/12
ELECTRICAL
STATE OF CALIFORNIA

The State of California or its officers or agents shall not be responsible for the accuracy or completeness of electronic copies of this plan sheet.

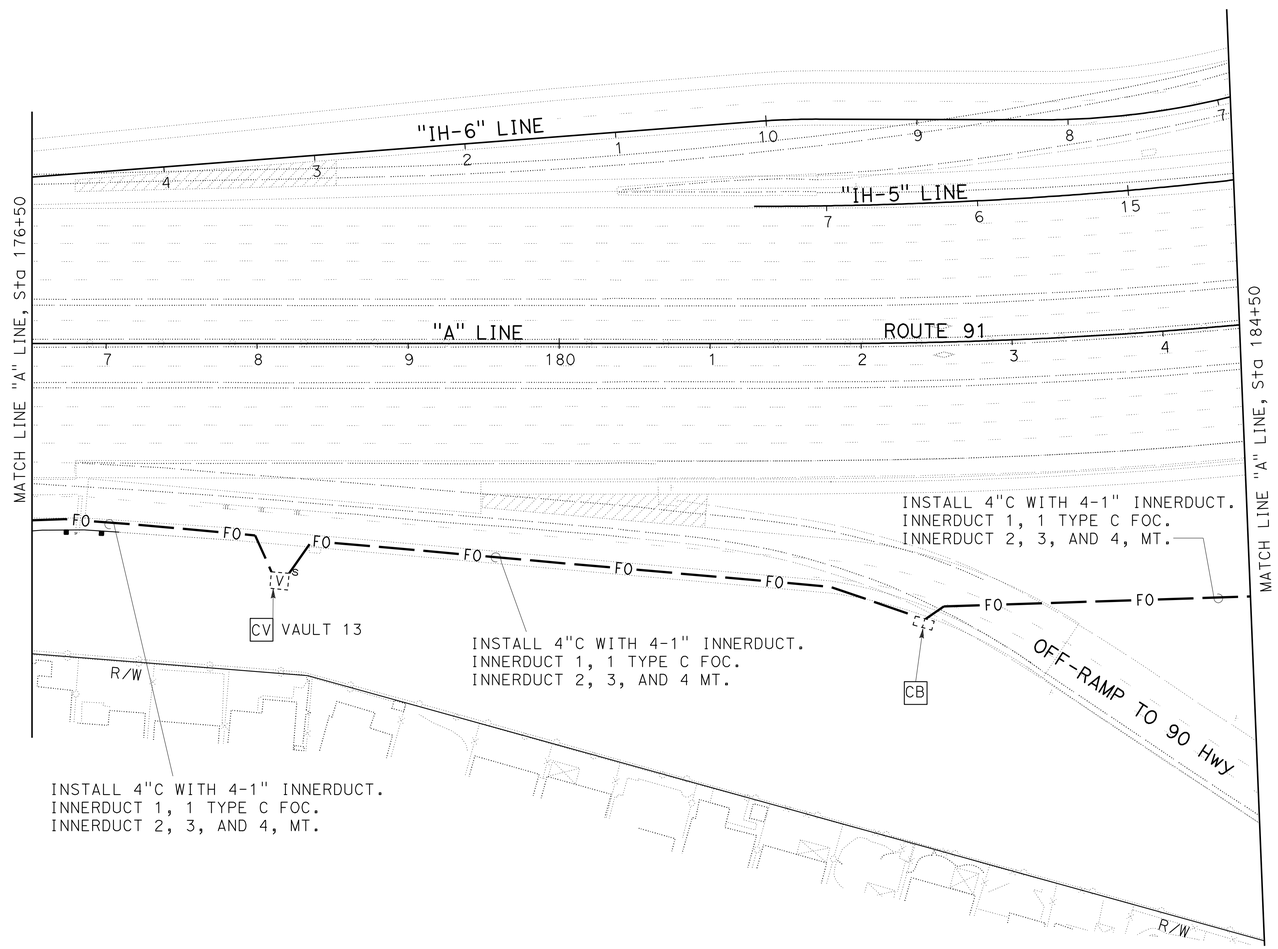

NOTES: (THIS SHEET ONLY)

FOR GENERAL NOTES, LEGEND, AND ABBREVIATIONS, SEE SHEET E-1 AND E-2.

COMMUNICATION SYSTEM

SCALE: 1" = 50'

E-102

THIS PLAN IS ACCURATE FOR ELECTRICAL WORK ONLY.

STATE OF CALIFORNIA - DEPARTMENT OF TRANSPORTATION
Caltrans
ELECTRICAL DESIGN

PROJECT ENGINEER SHAHRAM SHAHRIARI
CALCULATED/DESIGNED BY JOANNE VO
CHECKED BY SHAHRAM SHAHRIARI
REVISED BY
DATE REVISED

LAST REVISION 07-20-10
DATE PLOTTED => 16-DEC-2010
TIME PLOTTED => 17:19

FOR REDUCED PLANS ORIGINAL 0 20 40 60 80
USERNAME => trphils
DGN FILE => c0g330ua104.dgn
CU 12390
EA 0G3301

DIST	COUNTY	ROUTE	POST MILE TOTAL PROJECT	SHEET No	TOTAL SHEETS
12	Ora	91	9.1/15.1	678	949

08-12-10
REGISTERED ELECTRICAL ENGINEER

10-25-10
PLANS APPROVAL DATE

REGISTERED PROFESSIONAL ENGINEER
JOANNE VO
No. E 16748
Exp. 9/30/12
ELECTRICAL
STATE OF CALIFORNIA

The State of California or its officers or agents shall not be responsible for the accuracy or completeness of electronic copies of this plan sheet.

FOR ACCURATE RIGHT OF WAY AND ACCESS DATA,
CONTACT RIGHT OF WAY ENGINEERING AT THE DISTRICT OFFICE.

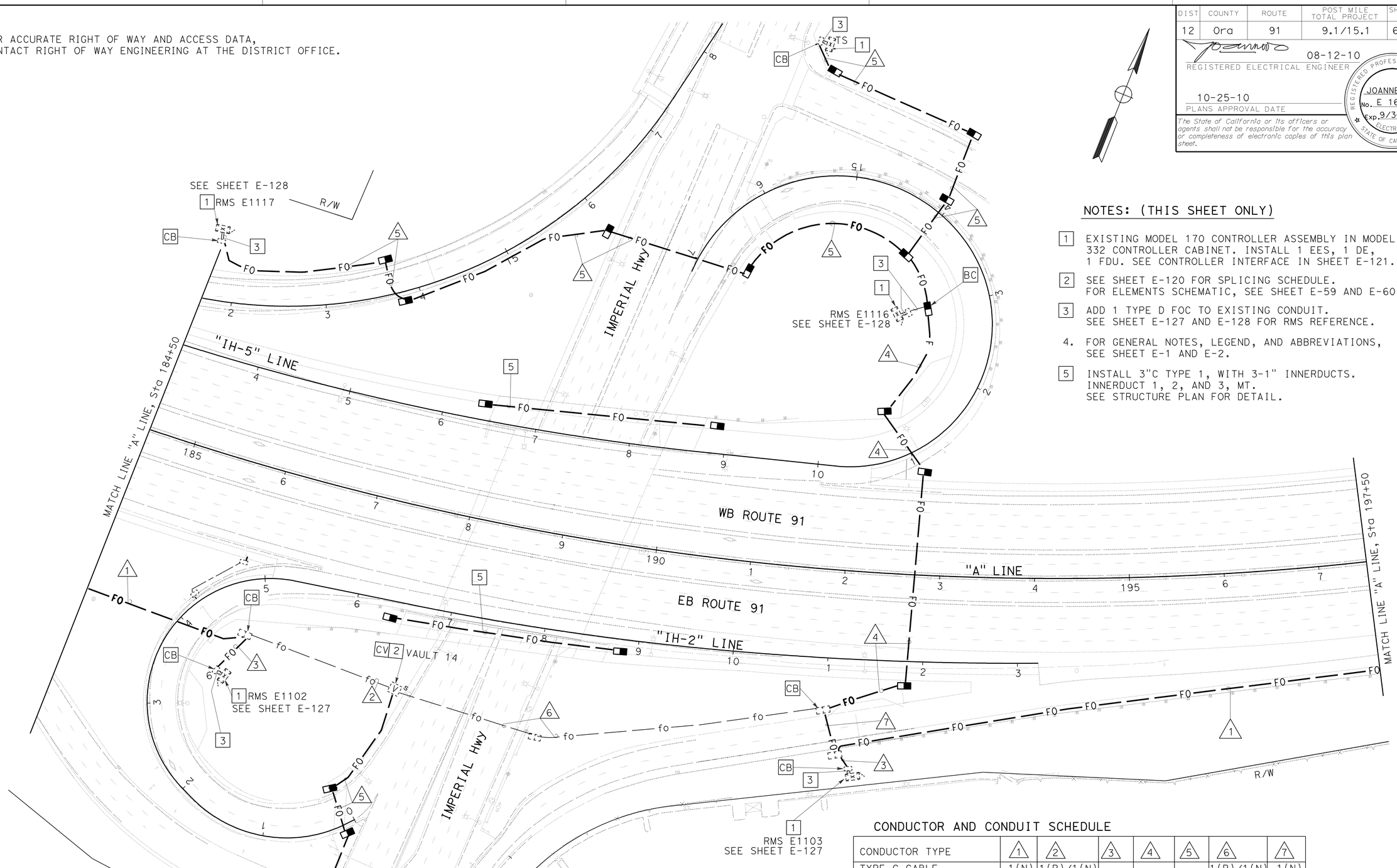

NOTES: (THIS SHEET ONLY)

1. EXISTING MODEL 170 CONTROLLER ASSEMBLY IN MODEL 332 CONTROLLER CABINET. INSTALL 1 EES, 1 DE, 1 FDU. SEE CONTROLLER INTERFACE IN SHEET E-121.
2. SEE SHEET E-120 FOR SPLICING SCHEDULE. FOR ELEMENTS SCHEMATIC, SEE SHEET E-59 AND E-60.
3. ADD 1 TYPE D FOC TO EXISTING CONDUIT. SEE SHEET E-127 AND E-128 FOR RMS REFERENCE.
4. FOR GENERAL NOTES, LEGEND, AND ABBREVIATIONS, SEE SHEET E-1 AND E-2.
5. INSTALL 3"C TYPE 1, WITH 3-1" INNERDUCTS. INNERDUCT 1, 2, AND 3, MT. SEE STRUCTURE PLAN FOR DETAIL.

CONDUCTOR AND CONDUIT SCHEDULE

CONDUCTOR TYPE	1	2	3	4	5	6	7
TYPE C CABLE	1(N)	1(R)/1(N)				1(R)/1(N)	1(N)
TYPE D CABLE	-	1(N)	1(N)	3(N)	1(N)	4(N)	1(N)
CONDUIT SIZE	4"(N)	4"(E)	2"(N)	2"(N)	2"(N)	4"(E)	4"(N)

(R): RC EXISTING CONDUIT OR CONDUCTOR
(N): NEW CONDUIT OR CONDUCTOR
(E): EXISTING CONDUIT OR CONDUCTOR

COMMUNICATION SYSTEM

SCALE: 1" = 50'

THIS PLAN IS ACCURATE FOR ELECTRICAL WORK ONLY.

E-103

REVISED BY	JOANNE VO
DATE REVISED	
CALCULATED/DESIGNED BY	SHAHRAM SHAHRIARI
CHECKED BY	
PROJECT ENGINEER	SHAHRAM SHAHRIARI

STATE OF CALIFORNIA - DEPARTMENT OF TRANSPORTATION
Caltrans
ELECTRICAL DESIGN

LAST REVISION 07-20-10
DATE PLOTTED => 17-DEC-2010
TIME PLOTTED => 09:55

FOR REDUCED PLANS ORIGINAL 0 20 40 60 80
USERNAME => trmikesl
DGN FILE => c0g330ua105.dgn
CU 12390
EA 0G3301

DIST	COUNTY	ROUTE	POST MILE TOTAL PROJECT	SHEET No	TOTAL SHEETS
12	Ora	91	9.1/15.1	679	949

08-12-10
REGISTERED ELECTRICAL ENGINEER

10-25-10
PLANS APPROVAL DATE

REGISTERED PROFESSIONAL ENGINEER
JOANNE VO
No. E 16748
Exp. 9/30/12
ELECTRICAL
STATE OF CALIFORNIA

The State of California or its officers or agents shall not be responsible for the accuracy or completeness of electronic copies of this plan sheet.

FOR ACCURATE RIGHT OF WAY AND ACCESS DATA,
CONTACT RIGHT OF WAY ENGINEERING AT THE DISTRICT OFFICE.

NOTES: (THIS SHEET ONLY)

FOR GENERAL NOTES, LEGEND, AND ABBREVIATIONS, SEE SHEET E-1 AND E-2.

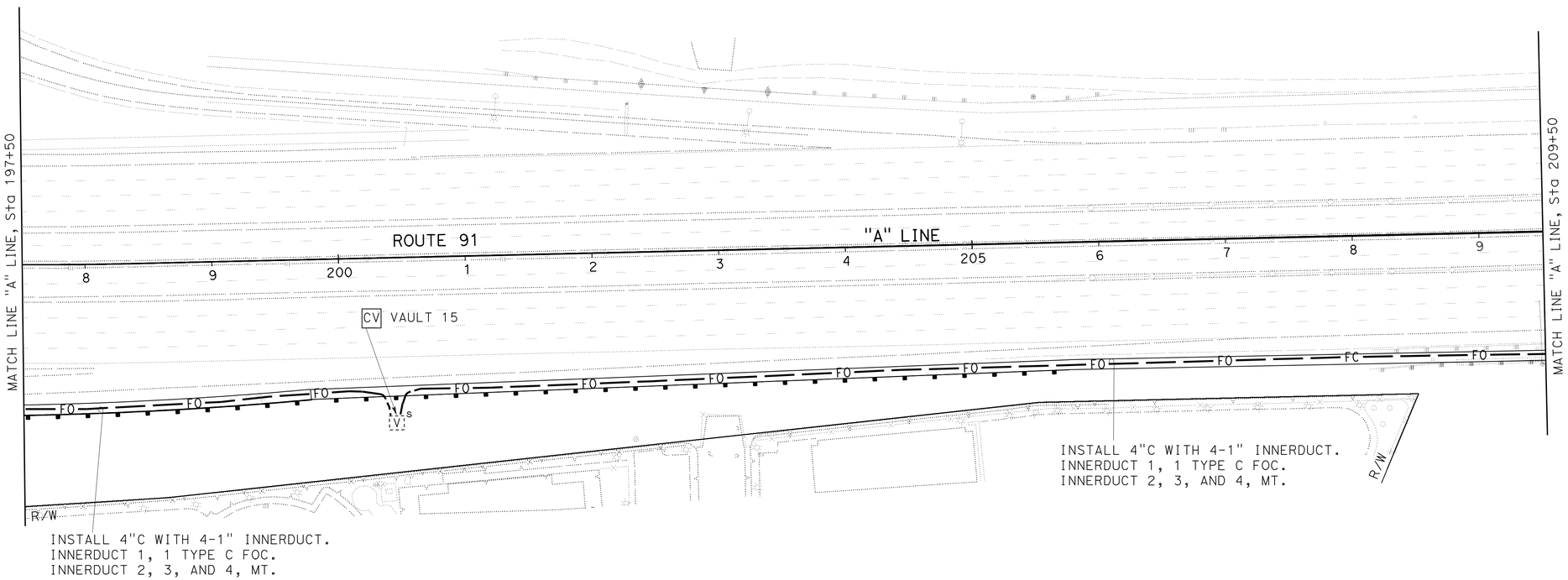

COMMUNICATION SYSTEM

SCALE: 1" = 50'

E-104

THIS PLAN IS ACCURATE FOR ELECTRICAL WORK ONLY.

CALCULATED/DESIGNED BY	JOANNE VO
CHECKED BY	SHAHRAM SHAHRIARI
REVISED BY	
DATE REVISED	

PROJECT ENGINEER
SHAHRAM SHAHRIARI

STATE OF CALIFORNIA - DEPARTMENT OF TRANSPORTATION
Caltrans
ELECTRICAL DESIGN

LAST REVISION 07-20-10
DATE PLOTTED => 16-DEC-2010
TIME PLOTTED => 17:19

FOR REDUCED PLANS ORIGINAL 0 20 40 60 80
USERNAME => trphils
DGN FILE => c0g330ua106.dgn
CU 12390
EA 0G3301

FOR ACCURATE RIGHT OF WAY AND ACCESS DATA,
CONTACT RIGHT OF WAY ENGINEERING AT THE DISTRICT OFFICE.

Dist	COUNTY	ROUTE	POST MILES TOTAL PROJECT	SHEET No.	TOTAL SHEETS
12	Ora	91	9.1/15.1	680	949

REGISTERED ELECTRICAL ENGINEER 08-12-10 DATE

PLANS APPROVAL DATE 10-25-10

REGISTERED PROFESSIONAL ENGINEER JOANNE VO No. E 16748 Exp. 9/30/12 ELECTRICAL STATE OF CALIFORNIA

THE STATE OF CALIFORNIA OR ITS OFFICERS OR AGENTS SHALL NOT BE RESPONSIBLE FOR THE ACCURACY OR COMPLETENESS OF SCANNED COPIES OF THIS PLAN SHEET.

NOTES: (THIS SHEET ONLY)

1. SEE E-59, E-60 AND E-120 FOR SPLICING SCHEDULE.
2. FOR GENERAL NOTES, LEGEND, AND ABBREVIATIONS, SEE SHEET E-1 AND E-2.

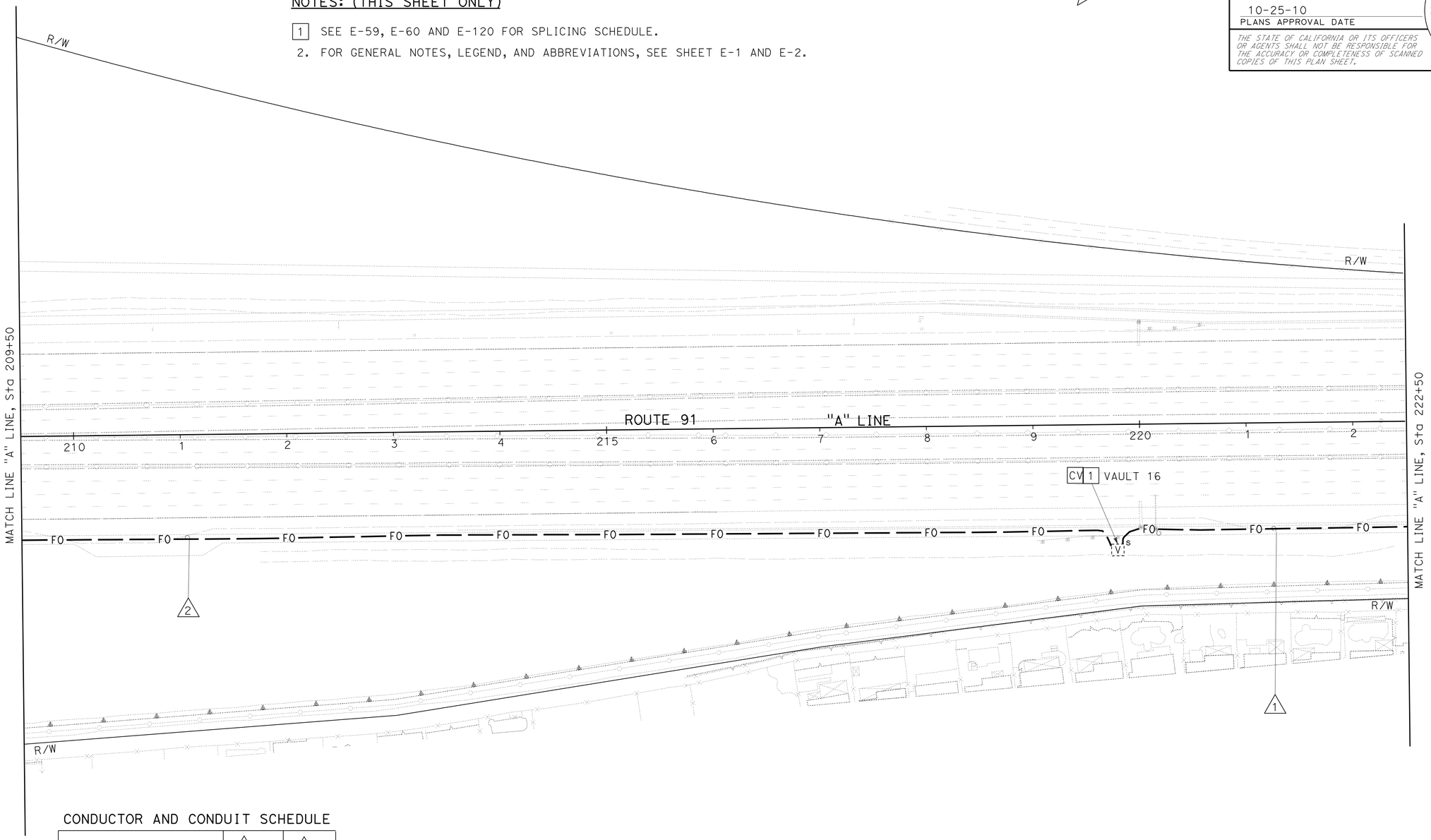

CONDUCTOR AND CONDUIT SCHEDULE

CONDUCTOR TYPE	1	2
TYPE C CABLE	1(N)	1(N)
TYPE D CABLE	1(N)	-
CONDUIT SIZE	4"(N)	4"(N)

(N): NEW CONDUIT OR CONDUCTOR

COMMUNICATION SYSTEM

SCALE: 1" = 50'

E-105

THIS PLAN IS ACCURATE FOR ELECTRICAL WORK ONLY.

STATE OF CALIFORNIA - DEPARTMENT OF TRANSPORTATION
Caltrans® ELECTRICAL DESIGN

FUNCTIONAL SUPERVISOR: S. SHAHRIARI
CALCULATED-DESIGNED BY: JOANNE VO
CHECKED BY: S. SHAHRIARI
REVISED BY
DATE REVISED

LAST REVISION 07-20-10
DATE PLOTTED => 17-DEC-2010
TIME PLOTTED => 09:55

FOR ACCURATE RIGHT OF WAY AND ACCESS DATA,
CONTACT RIGHT OF WAY ENGINEERING AT THE DISTRICT OFFICE.

NOTES: (THIS SHEET ONLY)

1. EXISTING TWO MODEL 170 CONTROLLER ASSEMBLIES IN MODEL 334 CONTROLLER CABINET. REMOVE EXISTING STATE COMMUNICATION EQUIPMENT. INSTALL 1 EES, 1 DE, 1 FDU. SEE CONTROLLER INTERFACE IN SHEET E-121. SEE SHEET E-135 FOR TMS REFERENCE.
2. ADD 1 TYPE D FOC TO EXISTING CONDUIT.
3. FOR GENERAL NOTES, LEGEND, AND ABBREVIATIONS, SEE SHEET E-1 AND E-2.

CONDUCTOR AND CONDUIT SCHEDULE

CONDUCTOR TYPE	1	2	3
TYPE C CABLE	1(N)	1(N)	-
TYPE D CABLE	1(N)	-	1(N)
CONDUIT SIZE	4"(N)	4"(N)	2"(N)

Dist	COUNTY	ROUTE	POST MILES TOTAL PROJECT	SHEET No.	TOTAL SHEETS
12	Ora	91	9.1/15.1	681	949

08-12-10
REGISTERED ELECTRICAL ENGINEER DATE

10-25-10
PLANS APPROVAL DATE

REGISTERED PROFESSIONAL ENGINEER
JOANNE VO
No. E 16748
Exp. 9/30/12
ELECTRICAL
STATE OF CALIFORNIA

THE STATE OF CALIFORNIA OR ITS OFFICERS OR AGENTS SHALL NOT BE RESPONSIBLE FOR THE ACCURACY OR COMPLETENESS OF SCANNED COPIES OF THIS PLAN SHEET.

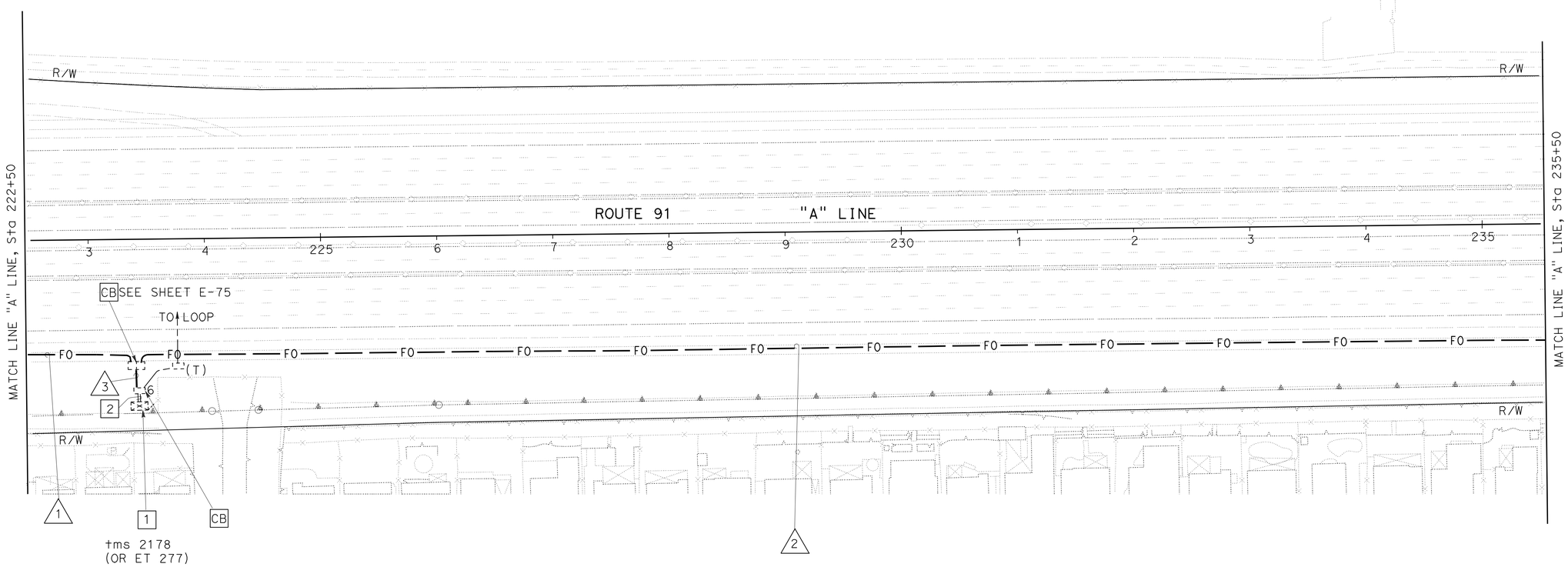

COMMUNICATION SYSTEM

SCALE: 1" = 50'

E-106

THIS PLAN IS ACCURATE FOR ELECTRICAL WORK ONLY.

STATE OF CALIFORNIA - DEPARTMENT OF TRANSPORTATION
Caltrans® **ELECTRICAL DESIGN**

FUNCTIONAL SUPERVISOR: S. SHAHRIARI
CALCULATED-DESIGNED BY: JOANNE VO
CHECKED BY: S. SHAHRIARI
REVISED BY
DATE REVISED

LAST REVISION 07-20-10
DATE PLOTTED => 16-DEC-2010
TIME PLOTTED => 17:19

Dist	COUNTY	ROUTE	POST MILES TOTAL PROJECT	SHEET No.	TOTAL SHEETS
12	Ora	91	9.1/15.1	682	949

08-12-10
REGISTERED ELECTRICAL ENGINEER DATE

10-25-10
PLANS APPROVAL DATE

REGISTERED PROFESSIONAL ENGINEER
JOANNE VO
No. E 16748
Exp. 9/30/12
ELECTRICAL
STATE OF CALIFORNIA

THE STATE OF CALIFORNIA OR ITS OFFICERS OR AGENTS SHALL NOT BE RESPONSIBLE FOR THE ACCURACY OR COMPLETENESS OF SCANNED COPIES OF THIS PLAN SHEET.

FOR ACCURATE RIGHT OF WAY AND ACCESS DATA,
CONTACT RIGHT OF WAY ENGINEERING AT THE DISTRICT OFFICE.

NOTE: (THIS SHEET ONLY)

FOR GENERAL NOTES, LEGEND, AND ABBREVIATIONS, SEE SHEET E-1 AND E-2.

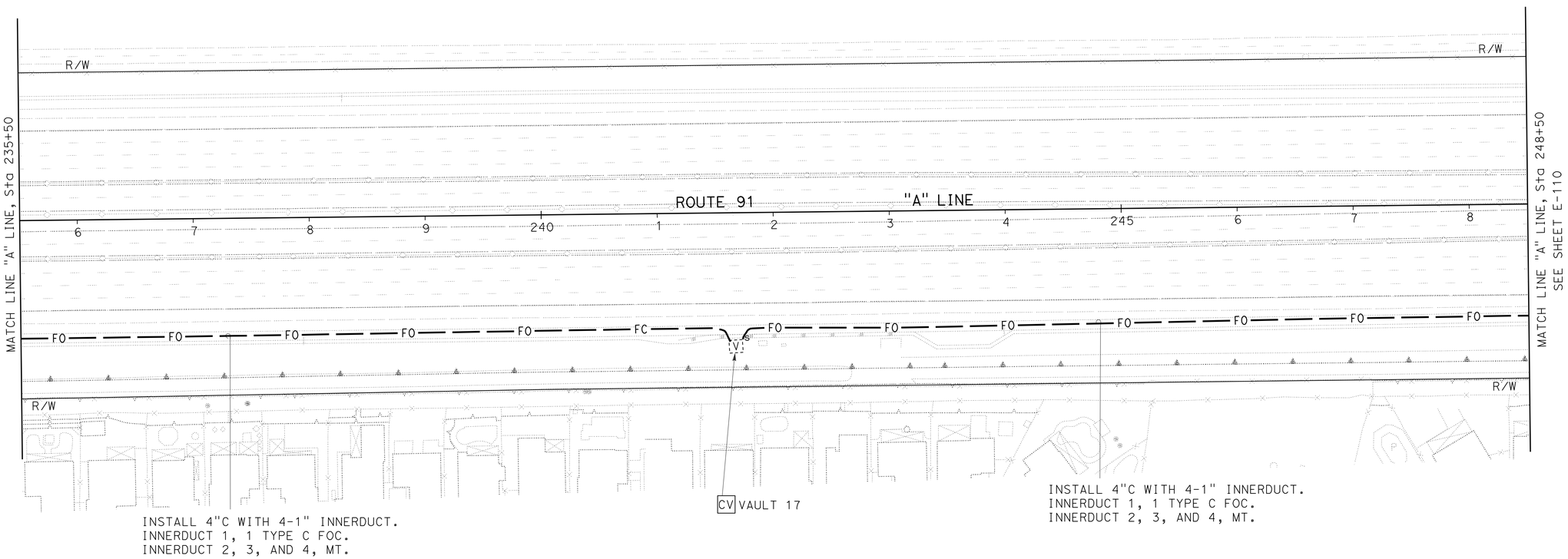

COMMUNICATION SYSTEM

SCALE: 1" = 50'

E-107

THIS PLAN IS ACCURATE FOR ELECTRICAL WORK ONLY.

STATE OF CALIFORNIA - DEPARTMENT OF TRANSPORTATION
Caltrans® **ELECTRICAL DESIGN**

FUNCTIONAL SUPERVISOR: S. SHAHRIARI
CALCULATED-DESIGNED BY: JOANNE VO
CHECKED BY: S. SHAHRIARI
REVISED BY
DATE REVISED

LAST REVISION 07-20-10
DATE PLOTTED => 16-DEC-2010
TIME PLOTTED => 17:19

Dist	COUNTY	ROUTE	POST MILES TOTAL PROJECT	SHEET No.	TOTAL SHEETS
12	Ora	91	9.1/15.1	683	949

REGISTERED ELECTRICAL ENGINEER 08-12-10 DATE

PLANS APPROVAL DATE 10-25-10

REGISTERED PROFESSIONAL ENGINEER JOANNE VO No. E 16748 Exp. 9/30/12 ELECTRICAL STATE OF CALIFORNIA

THE STATE OF CALIFORNIA OR ITS OFFICERS OR AGENTS SHALL NOT BE RESPONSIBLE FOR THE ACCURACY OR COMPLETENESS OF SCANNED COPIES OF THIS PLAN SHEET.

FOR ACCURATE RIGHT OF WAY AND ACCESS DATA,
CONTACT RIGHT OF WAY ENGINEERING AT THE DISTRICT OFFICE.

NOTES: (THIS SHEET ONLY)

1. SEE SHEET E-120 FOR STATE FIBER ASSIGNMENT.
   SEE SHEET E-59 AND E-60 FOR SPLICING SCHEDULE.
2. EXISTING TWO MODEL 170 CONTROLLER ASSEMBLIES IN MODEL 334 CONTROLLER CABINET. REMOVE EXISTING STATE COMMUNICATION EQUIPMENT. INSTALL 1 EES, 1 DE, 1 FDU. SEE CONTROLLER INTERFACE IN SHEET E-121. SEE SHEET E-136 FOR TMS REFERENCE.
3. ADD 1 TYPE D FOC TO EXISTING CONDUIT. SEE SHEET E-77 FOR OCTA FOC REFERENCE.
4. FOR GENERAL NOTES, LEGEND, AND ABBREVIATIONS, SEE SHEET E-1 AND E-2.

CONDUCTOR AND CONDUIT SCHEDULE

CONDUCTOR TYPE	1	2	3
TYPE C CABLE	1(N)	1(N)	-
TYPE D CABLE	1(N)	-	1(N)
CONDUIT SIZE	4"(N)	4"(N)	2"(N)

(N): NEW CONDUIT OR CONDUCTOR

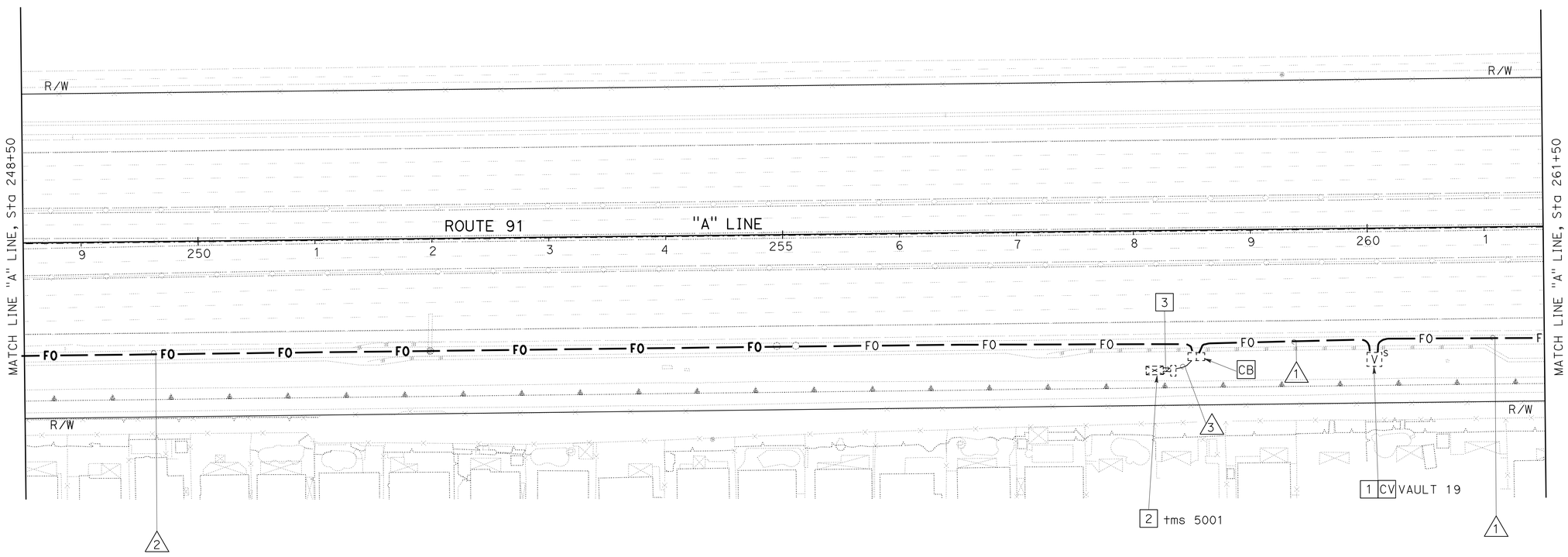

COMMUNICATION SYSTEM

SCALE: 1" = 50'

E-108

THIS PLAN IS ACCURATE FOR ELECTRICAL WORK ONLY.

STATE OF CALIFORNIA - DEPARTMENT OF TRANSPORTATION
Caltrans® ELECTRICAL DESIGN

FUNCTIONAL SUPERVISOR: S. SHAHRIARI
CALCULATED-DESIGNED BY: JOANNE VO
CHECKED BY: S. SHAHRIARI
REVISED BY
DATE REVISED

LAST REVISION 07-20-10
DATE PLOTTED => 17-DEC-2010
TIME PLOTTED => 09:55

FOR ACCURATE RIGHT OF WAY AND ACCESS DATA,
CONTACT RIGHT OF WAY ENGINEERING AT THE DISTRICT OFFICE.

Dist	COUNTY	ROUTE	POST MILES TOTAL PROJECT	SHEET No.	TOTAL SHEETS
12	Ora	91	9.1/15.1	684	949

REGISTERED ELECTRICAL ENGINEER 08-12-10 DATE

PLANS APPROVAL DATE 10-25-10

REGISTERED PROFESSIONAL ENGINEER JOANNE VO No. E 16748 Exp. 9/30/12 ELECTRICAL STATE OF CALIFORNIA

THE STATE OF CALIFORNIA OR ITS OFFICERS OR AGENTS SHALL NOT BE RESPONSIBLE FOR THE ACCURACY OR COMPLETENESS OF SCANNED COPIES OF THIS PLAN SHEET.

NOTES: (THIS SHEET ONLY)

1. SEE SHEET E-120 FOR CALTRANS FIBER ASSIGNMENT. SEE SHEET E-59 AND E-60 FOR SPLICING SCHEDULE.
2. EXISTING MODEL 170 CONTROLLER ASSEMBLY IN MODEL 334 CONTROLLER CABINET. INSTALL 1 EES, 1 DE, 1 FDU. SEE CONTROLLER INTERFACE IN SHEET E-121.
3. FOR GENERAL NOTES, LEGEND, AND ABBREVIATIONS, SEE SHEET E-1 AND E-2.
4. EXISTING 35 kVA RATED 480/120 V STEP DOWN TRANSFORMER.
5. Exist 277/480 V TYPE III-BF UNMETERED SERVICE EQUIPMENT ENCLOSURE. 2P, 480 V, 100 A, CB FOR MAIN.

CONDUCTOR AND CONDUIT SCHEDULE

CONDUCTOR TYPE	1	2
TYPE C CABLE	1(N)	1(N)
TYPE D CABLE	1(N)	-
CONDUIT SIZE	4"(N)	4"(N)

(N): NEW CONDUIT OR CONDUCTOR

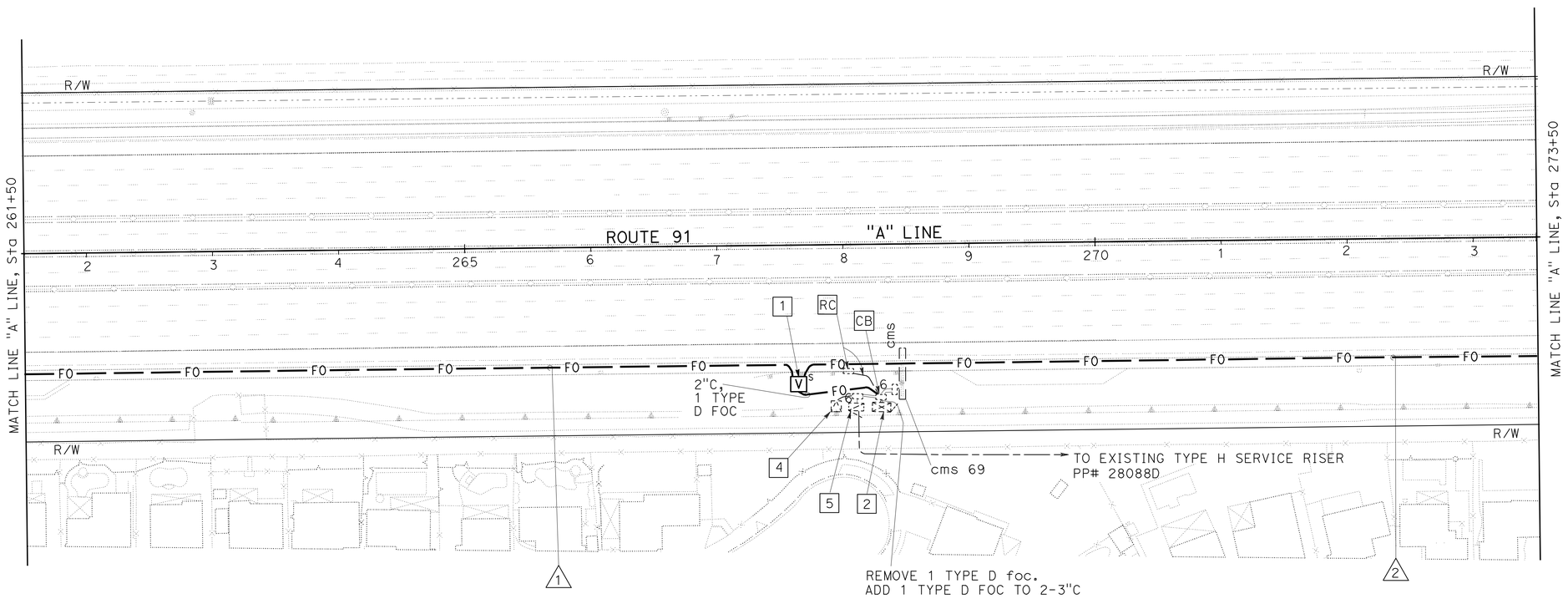

COMMUNICATION SYSTEM

SCALE: 1" = 50'

E-109

THIS PLAN IS ACCURATE FOR ELECTRICAL WORK ONLY.

STATE OF CALIFORNIA - DEPARTMENT OF TRANSPORTATION
Caltrans® ELECTRICAL DESIGN

FUNCTIONAL SUPERVISOR: S. SHAHRIARI
CALCULATED-DESIGNED BY: JOANNE VO
CHECKED BY: S. SHAHRIARI
REVISED BY
DATE REVISED

LAST REVISION 07-20-10
DATE PLOTTED => 17-DEC-2010
TIME PLOTTED => 09:56

DIST	COUNTY	ROUTE	POST MILE TOTAL PROJECT	SHEET No	TOTAL SHEETS
12	Ora	91	9.1/15.1	685	949

REGISTERED ELECTRICAL ENGINEER 08-12-10

PLANS APPROVAL DATE 10-25-10

REGISTERED PROFESSIONAL ENGINEER JOANNE VO No. E 16748 Exp. 9/30/12 ELECTRICAL STATE OF CALIFORNIA

The State of California or its officers or agents shall not be responsible for the accuracy or completeness of electronic copies of this plan sheet.

FOR ACCURATE RIGHT OF WAY AND ACCESS DATA,
CONTACT RIGHT OF WAY ENGINEERING AT THE DISTRICT OFFICE.

NOTES: (THIS SHEET ONLY)

1. SEE SHEET E-120 FOR CALTRANS FIBER ASSIGNMENT.
   SEE SHEET E-59 AND E-60 FOR SPLICING SCHEDULE.
2. EXISTING TWO MODEL 170 CONTROLLER ASSEMBLY IN MODEL 334 CONTROLLER CABINET.
   REMOVE EXISTING STATE COMMUNICATION EQUIPMENT.
   INSTALL 1 EES, 1 DE, 1 FDU. SEE CONTROLLER INTERFACE IN SHEET E-121.
   SEE SHEET E-137 FOR TMS 2179 REFERENCE.
3. ADD 1 TYPE D FOC TO EXISTING CONDUIT. SEE SHEET E-79 FOR OCTA FOC REFERENCE.
4. FOR GENERAL NOTES, LEGEND, AND ABBREVIATIONS, SEE SHEET E-1 AND E-2.

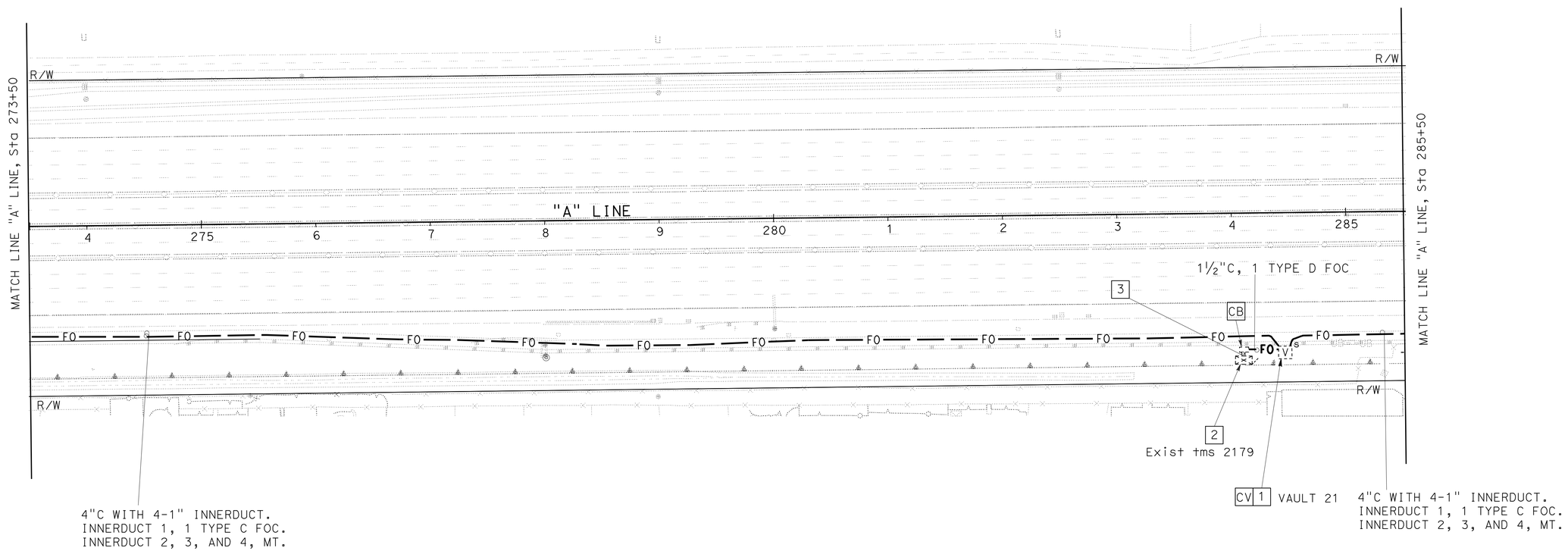

COMMUNICATION SYSTEM

SCALE: 1" = 50'

E-110

THIS PLAN IS ACCURATE FOR ELECTRICAL WORK ONLY.

REVISED BY	DATE REVISED

CALCULATED/DESIGNED BY: JOANNE VO
CHECKED BY: SHAHRAM SHAHRIARI

PROJECT ENGINEER: SHAHRAM SHAHRIARI

STATE OF CALIFORNIA - DEPARTMENT OF TRANSPORTATION
Caltrans
ELECTRICAL DESIGN

LAST REVISION 07-20-10
DATE PLOTTED => 17-DEC-2010
TIME PLOTTED => 09:56

FOR REDUCED PLANS ORIGINAL 0 20 40 60 80

USERNAME => trmikesl
DGN FILE => c0g330ua112.dgn

CU 12390

EA 0G3301

Dist	COUNTY	ROUTE	POST MILES TOTAL PROJECT	SHEET No.	TOTAL SHEETS
12	Ora	91	9.1/15.1	686	949

REGISTERED ELECTRICAL ENGINEER 08-12-10 DATE

10-25-10
PLANS APPROVAL DATE

REGISTERED PROFESSIONAL ENGINEER
JOANNE VO
No. E 16748
Exp. 9/30/12
ELECTRICAL
STATE OF CALIFORNIA

THE STATE OF CALIFORNIA OR ITS OFFICERS OR AGENTS SHALL NOT BE RESPONSIBLE FOR THE ACCURACY OR COMPLETENESS OF SCANNED COPIES OF THIS PLAN SHEET.

FOR ACCURATE RIGHT OF WAY AND ACCESS DATA,
CONTACT RIGHT OF WAY ENGINEERING AT THE DISTRICT OFFICE.

NOTE: (THIS SHEET ONLY)

FOR GENERAL NOTES, LEGEND, AND ABBREVIATIONS, SEE SHEET E-1 AND E-2.

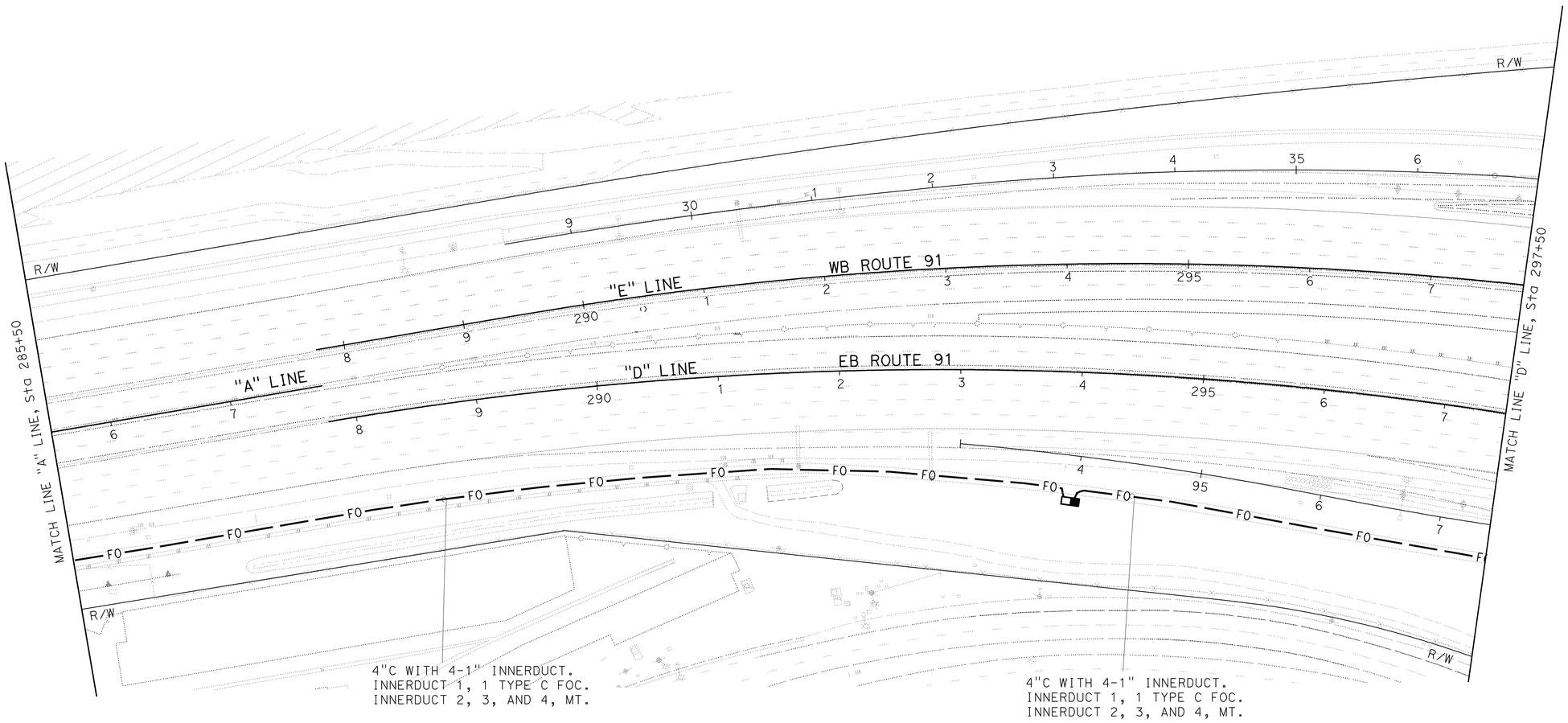

COMMUNICATION SYSTEM

SCALE: 1" = 50'

E-111

THIS PLAN IS ACCURATE FOR ELECTRICAL WORK ONLY.

STATE OF CALIFORNIA - DEPARTMENT OF TRANSPORTATION
Caltrans® ELECTRICAL DESIGN

FUNCTIONAL SUPERVISOR: S. SHAHRIARI
CALCULATED-DESIGNED BY: JOANNE VO
CHECKED BY: S. SHAHRIARI
REVISED BY
DATE REVISED

LAST REVISION 10-13-10
DATE PLOTTED => 16-DEC-2010
TIME PLOTTED => 17:20

DIST	COUNTY	ROUTE	POST MILE TOTAL PROJECT	SHEET No	TOTAL SHEETS
12	Ora	91	9.1/15.1	687	949

REGISTERED ELECTRICAL ENGINEER 08-12-10

PLANS APPROVAL DATE 10-25-10

REGISTERED PROFESSIONAL ENGINEER JOANNE VO No. E 16748 Exp. 9/30/12 ELECTRICAL STATE OF CALIFORNIA

The State of California or its officers or agents shall not be responsible for the accuracy or completeness of electronic copies of this plan sheet.

FOR ACCURATE RIGHT OF WAY AND ACCESS DATA,
CONTACT RIGHT OF WAY ENGINEERING AT THE DISTRICT OFFICE.

CONDUCTOR AND CONDUIT SCHEDULE

CONDUCTOR TYPE	1	2	3
TYPE C CABLE	1(N)		1(R)/1(N)
TYPE D CABLE	-	1(N)	
CONDUIT SIZE	4"(N)	2"(N)	4"(E)

(R): RC EXISTING CONDUIT OR CONDUCTOR
(N): NEW CONDUIT OR CONDUCTOR
(E): EXISTING CONDUIT OR CONDUCTOR

NOTES: (THIS SHEET ONLY)

1. SEE SHEET E-120 FOR CALTRANS FIBER ASSIGNMENT.
   SEE SHEET E-59 AND E-60 FOR SPLICING SCHEDULE.
2. ADD 1 TYPE D FOC TO EXISTING CONDUIT. SEE SHEET E-123 FOR REFERENCE.
3. FOR GENERAL NOTES, LEGEND, AND ABBREVIATIONS, SEE SHEET E-1 AND E-2.
4. EXISTING CCTV CONTROLLER IN MODEL 334 CONTROLLER CABINET.
   INSTALL 1 EES, 1 DE, 1 FDU. SEE CONTROLLER INTERFACE IN SHEET E-122.
   SEE SHEET E-123 FOR CCTV REFERENCE.

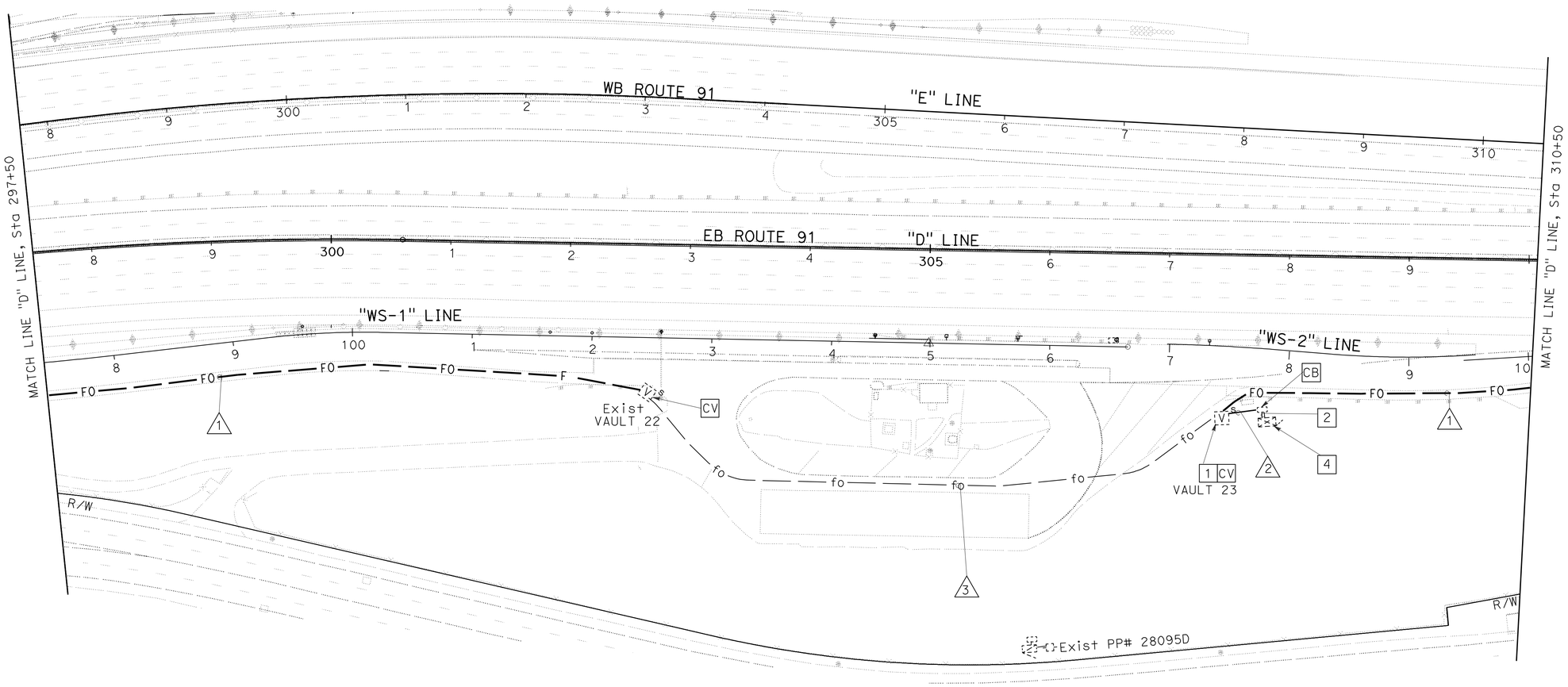

COMMUNICATION SYSTEM

SCALE: 1" = 50'

E-112

THIS PLAN IS ACCURATE FOR ELECTRICAL WORK ONLY

STATE OF CALIFORNIA - DEPARTMENT OF TRANSPORTATION
Caltrans
ELECTRICAL DESIGN

PROJECT ENGINEER SHAHRAM SHAHRIARI
CALCULATED/DESIGNED BY JOANNE VO
CHECKED BY SHAHRAM SHAHRIARI
REVISED BY
DATE REVISED

LAST REVISION 07-20-10
DATE PLOTTED => 17-DEC-2010
TIME PLOTTED => 09:56

FOR REDUCED PLANS ORIGINAL 0 20 40 60 80
USERNAME => trmikesl
DGN FILE => c0g330ua114.dgn
CU 12390
EA 0G3301

DIST	COUNTY	ROUTE	POST MILE TOTAL PROJECT	SHEET No	TOTAL SHEETS
12	Ora	91	9.1/15.1	688	949

08-12-10
REGISTERED ELECTRICAL ENGINEER

10-25-10
PLANS APPROVAL DATE

REGISTERED PROFESSIONAL ENGINEER
JOANNE VO
No. E 16748
Exp. 9/30/12
ELECTRICAL
STATE OF CALIFORNIA

The State of California or its officers or agents shall not be responsible for the accuracy or completeness of electronic copies of this plan sheet.

FOR ACCURATE RIGHT OF WAY AND ACCESS DATA,
CONTACT RIGHT OF WAY ENGINEERING AT THE DISTRICT OFFICE.

NOTE: (THIS SHEET ONLY)

FOR GENERAL NOTES, LEGEND, AND ABBREVIATIONS, SEE SHEETS E-1 AND E-2.

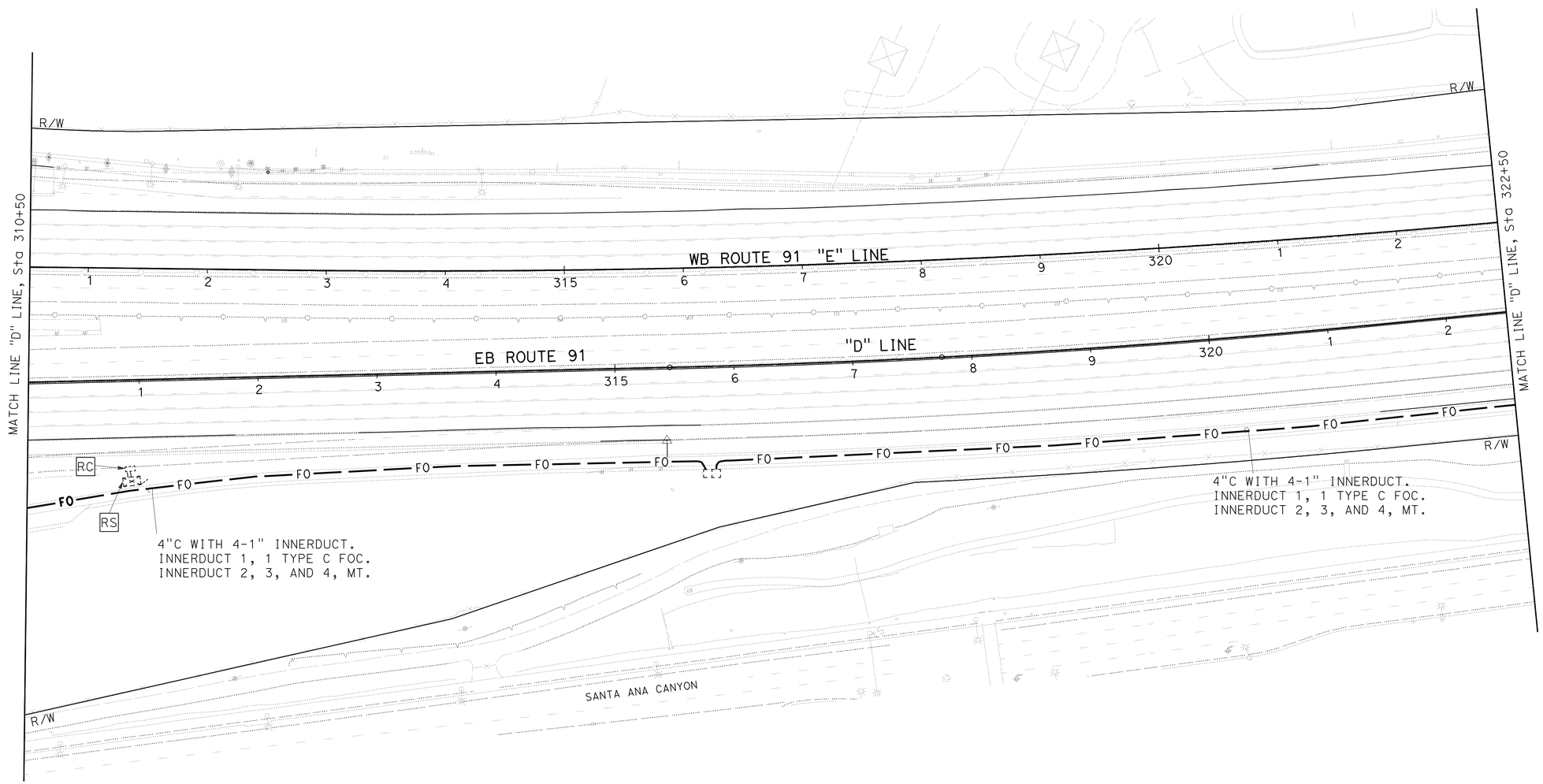

COMMUNICATION SYSTEM

SCALE: 1" = 50'

E-113

THIS PLAN IS ACCURATE FOR ELECTRICAL WORK ONLY.

REVISED BY	DATE REVISED

CALCULATED/DESIGNED BY: JOANNE VO
CHECKED BY: SHAHRAM SHAHRIARI

PROJECT ENGINEER: SHAHRAM SHAHRIARI

STATE OF CALIFORNIA - DEPARTMENT OF TRANSPORTATION
Caltrans®
ELECTRICAL DESIGN

LAST REVISION 07-20-10
DATE PLOTTED => 16-DEC-2010
TIME PLOTTED => 17:20

DIST	COUNTY	ROUTE	POST MILE TOTAL PROJECT	SHEET No	TOTAL SHEETS
12	Ora	91	9.1/15.1	689	949

REGISTERED ELECTRICAL ENGINEER 08-12-10

PLANS APPROVAL DATE 10-25-10

REGISTERED PROFESSIONAL ENGINEER JOANNE VO No. E 16748 Exp. 9/30/12 ELECTRICAL STATE OF CALIFORNIA

The State of California or its officers or agents shall not be responsible for the accuracy or completeness of electronic copies of this plan sheet.

FOR ACCURATE RIGHT OF WAY AND ACCESS DATA,
CONTACT RIGHT OF WAY ENGINEERING AT THE DISTRICT OFFICE.

CONDUCTOR AND CONDUIT SCHEDULE

CONDUCTOR TYPE	1	2	3	4	5	6
TYPE C CABLE	1(N)	1(AB)				1(N)
TYPE D CABLE	-		3(N)	1(N)	2(N)	3(N)
CONDUIT SIZE	4"(N)	4"(AB)	2"(N)	2"(N)	2"(N)	4"(N)

(N): NEW CONDUIT OR CONDUCTOR
(AB): ABANDON CONDUIT OR CONDUCTOR

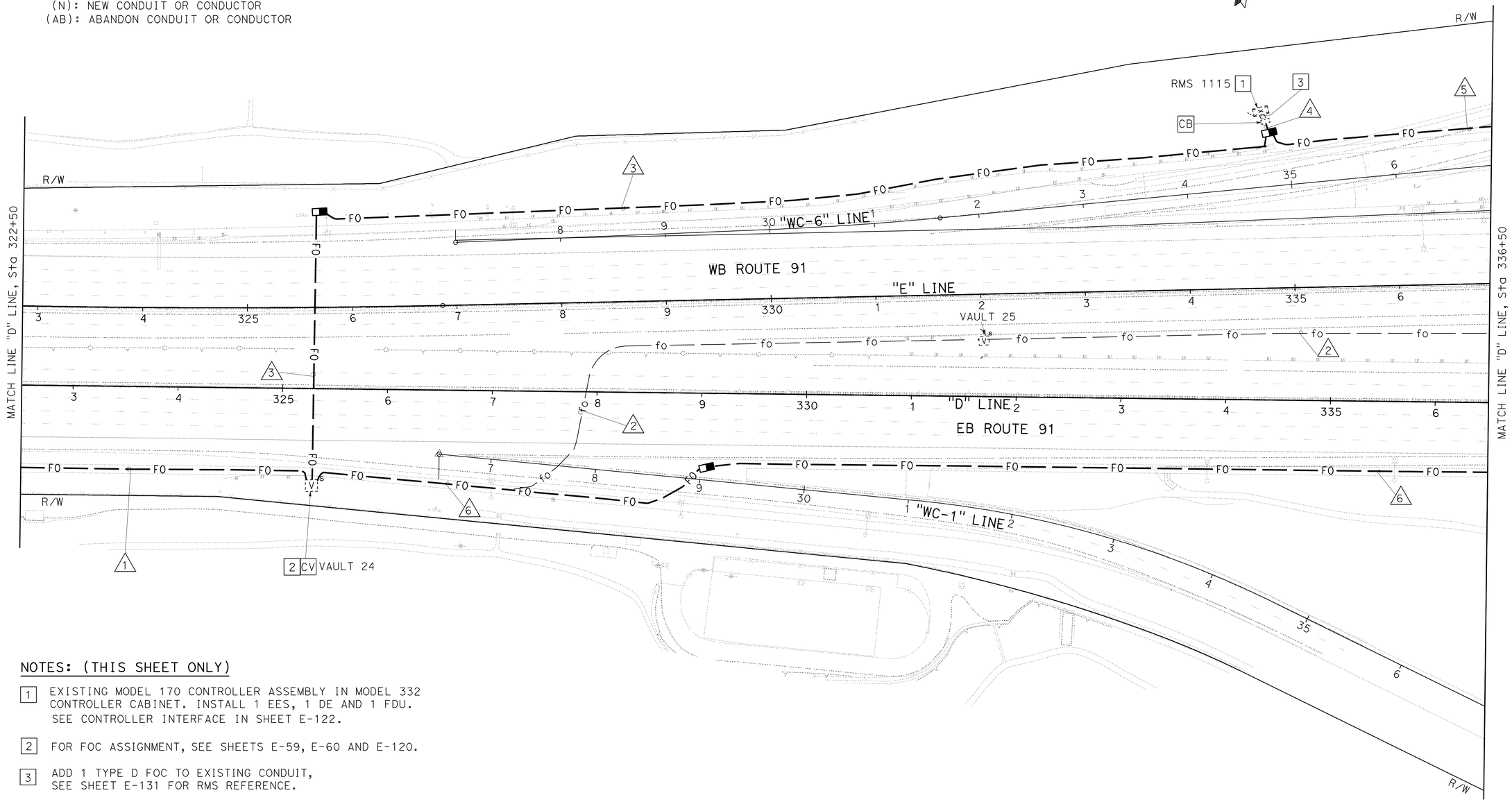

NOTES: (THIS SHEET ONLY)

1. EXISTING MODEL 170 CONTROLLER ASSEMBLY IN MODEL 332 CONTROLLER CABINET. INSTALL 1 EES, 1 DE AND 1 FDU. SEE CONTROLLER INTERFACE IN SHEET E-122.
2. FOR FOC ASSIGNMENT, SEE SHEETS E-59, E-60 AND E-120.
3. ADD 1 TYPE D FOC TO EXISTING CONDUIT, SEE SHEET E-131 FOR RMS REFERENCE.
4. FOR GENERAL NOTES, LEGEND, AND ABBREVIATIONS, SEE SHEETS E-1 AND E-2.

THIS PLAN IS ACCURATE FOR ELECTRICAL WORK ONLY.

COMMUNICATION SYSTEM

SCALE: 1" = 50'

E-114

REVISED BY	DATE REVISED
JOANNE VO	SHAHRAM SHAHRIARI
CALCULATED/DESIGNED BY	CHECKED BY
PROJECT ENGINEER	SHAHRAM SHAHRIARI

STATE OF CALIFORNIA - DEPARTMENT OF TRANSPORTATION
Caltrans
ELECTRICAL DESIGN

LAST REVISION 07-20-10 | DATE PLOTTED => 16-DEC-2010 | TIME PLOTTED => 17:20

FOR REDUCED PLANS ORIGINAL 0 20 40 60 80

USERNAME => trphils
DGN FILE => c0g330ua116.dgn

CU 12390 | EA 0G3301

DIST	COUNTY	ROUTE	POST MILE TOTAL PROJECT	SHEET No	TOTAL SHEETS
12	Ora	91	9.1/15.1	690	949

08-12-10
REGISTERED ELECTRICAL ENGINEER

10-25-10
PLANS APPROVAL DATE

REGISTERED PROFESSIONAL ENGINEER JOANNE VO No. E 16748 Exp. 9/30/12 ELECTRICAL STATE OF CALIFORNIA

The State of California or its officers or agents shall not be responsible for the accuracy or completeness of electronic copies of this plan sheet.

FOR ACCURATE RIGHT OF WAY AND ACCESS DATA,
CONTACT RIGHT OF WAY ENGINEERING AT THE DISTRICT OFFICE.

CONDUCTOR AND CONDUIT SCHEDULE

CONDUCTOR TYPE	1	2	3	4
TYPE C CABLE	1(N)	1(N)		
TYPE D CABLE	3(N)		2(N)	1(N)
CONDUIT SIZE	4"(N)	4"(N)	2"(N)	2"(N)

(N): NEW CONDUIT OR CONDUCTOR

NOTES: (THIS SHEET ONLY)

1. EXISTING MODEL 170 CONTROLLER ASSEMBLY IN MODEL 332 CONTROLLER CABINET. INSTALL 1 EES, 1 DE AND 1 FDU. SEE CONTROLLER INTERFACE IN SHEET E-121.
2. ADD 1 TYPE D FOC TO EXISTING CONDUIT. SEE SHEET E-129 FOR RMS REFERENCE.
3. FOR GENERAL NOTES, LEGEND, AND ABBREVIATIONS, SEE SHEETS E-1 AND E-2. FOR ELEMENTS SCHEMATIC, SEE SHEETS E-59 AND E-60. FOR FOC ASSIGNMENT, SEE SHEET E-120.
4. INSTALL 3"C TYPE 1, WITH 3-1" TYPE 3 INNERDUCT. INNERDUCT 1, 1 TYPE C FOC. INNERDUCT 2, 1 TYPE D FOC. INNERDUCT 3, MT. SEE DETAIL IN STRUCTURE SHEET.
5. ADD 1 TYPE D FOC TO EXISTING CONDUIT. SEE SHEET E-130 FOR RMS REFERENCE.

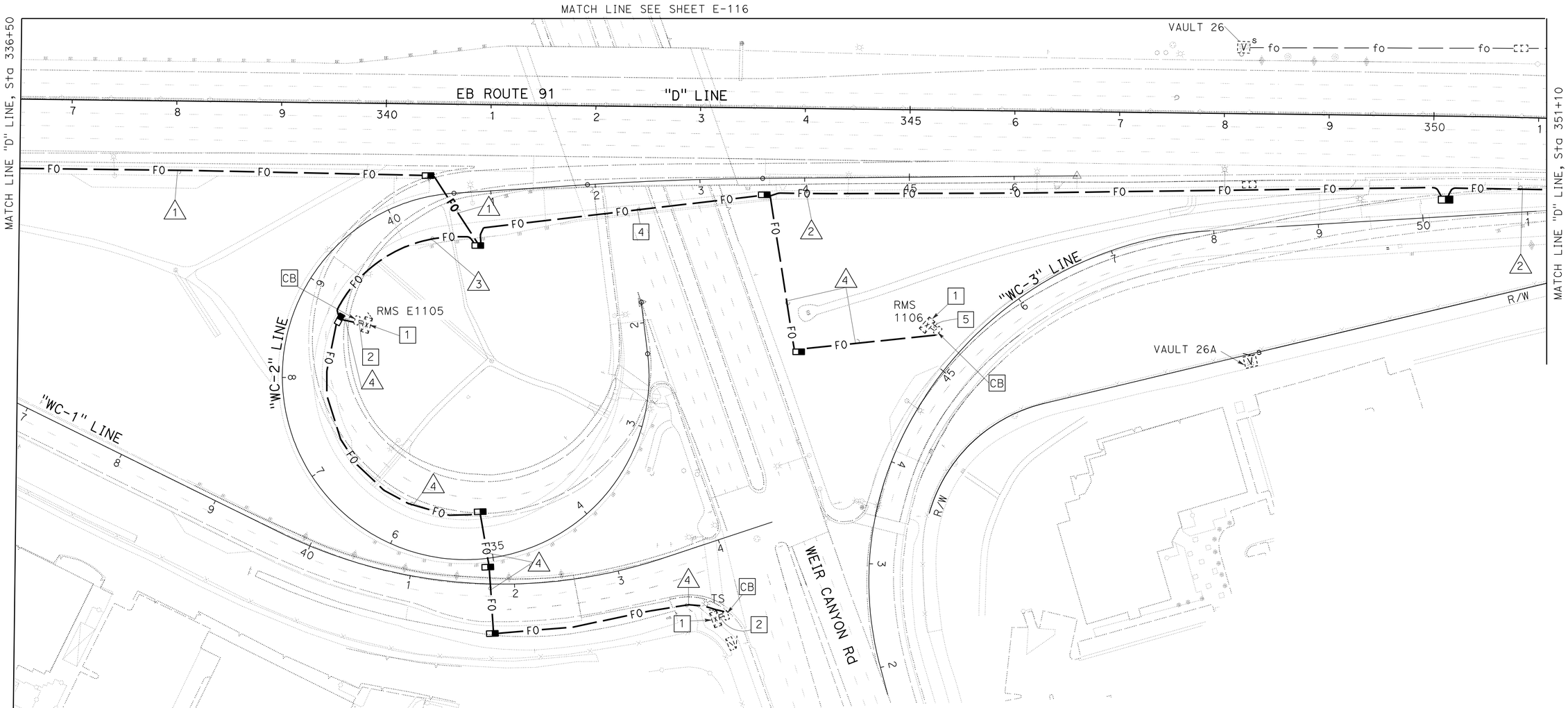

COMMUNICATION SYSTEM

SCALE: 1" = 50'

E-115

THIS PLAN IS ACCURATE FOR ELECTRICAL WORK ONLY.

STATE OF CALIFORNIA - DEPARTMENT OF TRANSPORTATION
Caltrans
ELECTRICAL DESIGN

PROJECT ENGINEER SHAHRAM SHAHRIARI

CALCULATED/DESIGNED BY JOANNE VO
CHECKED BY SHAHRAM SHAHRIARI

REVISED BY
DATE REVISED

LAST REVISION 07-20-10
DATE PLOTTED => 17-DEC-2010
TIME PLOTTED => 09:56

FOR REDUCED PLANS ORIGINAL 0 20 40 60 80
USERNAME => trmikesl
DGN FILE => c0g330ua117.dgn
CU 12390
EA 0G3301

DIST	COUNTY	ROUTE	POST MILE TOTAL PROJECT	SHEET No	TOTAL SHEETS
12	Ora	91	9.1/15.1	691	949

08-12-10
REGISTERED ELECTRICAL ENGINEER

10-25-10
PLANS APPROVAL DATE

REGISTERED PROFESSIONAL ENGINEER
JOANNE VO
No. E 16748
Exp. 9/30/12
ELECTRICAL
STATE OF CALIFORNIA

The State of California or its officers or agents shall not be responsible for the accuracy or completeness of electronic copies of this plan sheet.

FOR ACCURATE RIGHT OF WAY AND ACCESS DATA,
CONTACT RIGHT OF WAY ENGINEERING AT THE DISTRICT OFFICE.

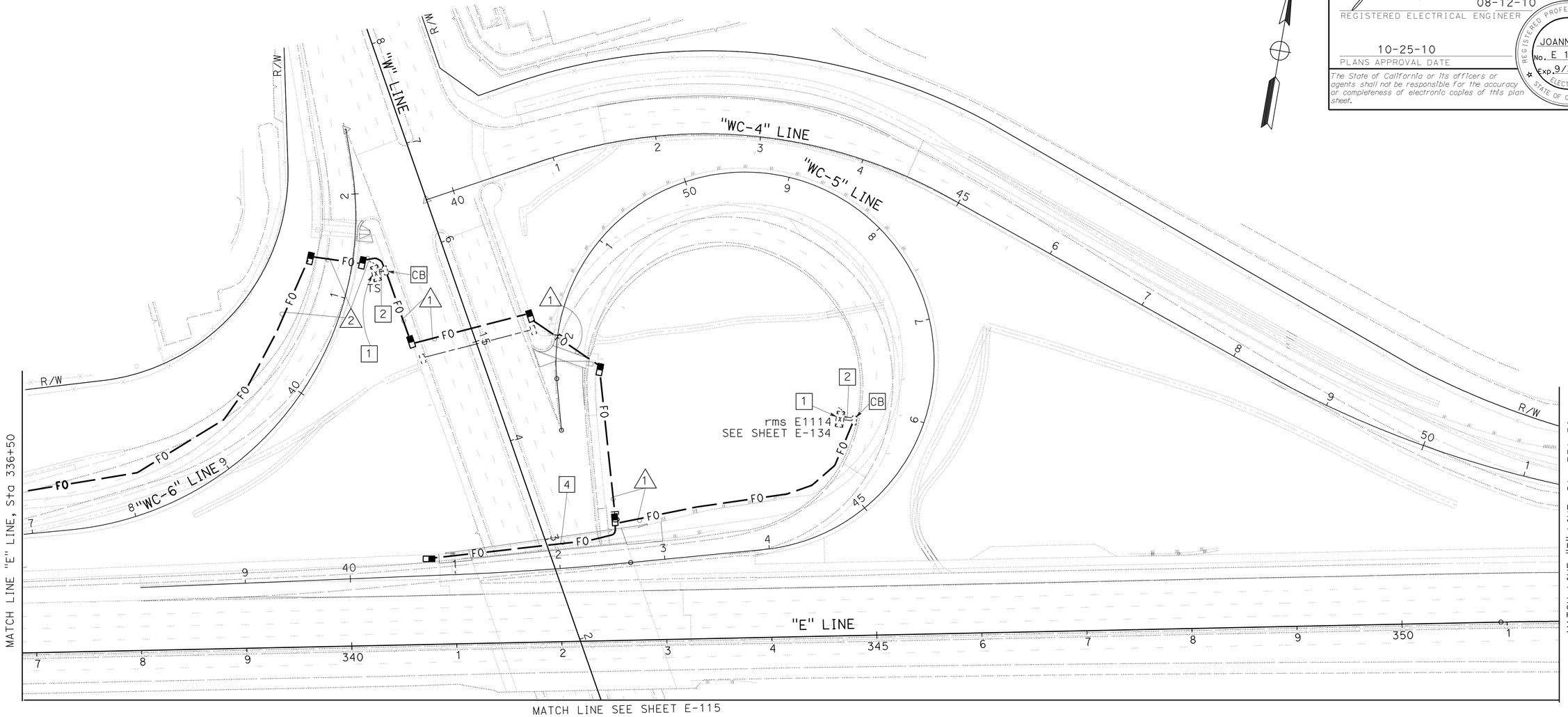

CONDUCTOR AND CONDUIT SCHEDULE

CONDUCTOR TYPE	1	2
TYPE D CABLE	1(N)	2(N)
CONDUIT SIZE	2"(N)	2"(N)

(N): NEW CONDUIT OR CONDUCTOR

NOTES: (THIS SHEET ONLY)

1. EXISTING MODEL 170 CONTROLLER ASSEMBLY IN MODEL 332 CONTROLLER CABINET. INSTALL 1 EES, 1 DE AND 1 FDU. SEE CONTROLLER INTERFACE IN SHEET E-121.
2. ADD 1 TYPE D FOC TO EXISTING CONDUIT.
3. FOR GENERAL NOTES, LEGEND, AND ABBREVIATIONS, SEE SHEETS E-1 AND E-2. FOR ELEMENTS SCHEMATIC, SEE SHEETS E-59 AND E-60.
4. INSTALL 3"C TYPE 1, WITH 3-1" INNERDUCTS. INNERDUCT 1, 2 AND 3, MT. SEE DETAIL IN STRUCTURE PLANS.

THIS PLAN IS ACCURATE FOR ELECTRICAL WORK ONLY.

COMMUNICATION SYSTEM

SCALE: 1" = 50'

E-116

STATE OF CALIFORNIA - DEPARTMENT OF TRANSPORTATION
Caltrans
ELECTRICAL DESIGN

PROJECT ENGINEER: SHAHRAM SHAHRIARI
CALCULATED/DESIGNED BY: JOANNE VO
CHECKED BY: SHAHRAM SHAHRIARI
REVISED BY
DATE REVISED

FOR REDUCED PLANS ORIGINAL 0 20 40 60 80

USERNAME => trmikesl
DGN FILE => c0g330ua118.dgn

CU 12390

EA 0G3301

LAST REVISION 01-01-09
DATE PLOTTED => 17-DEC-2010
TIME PLOTTED => 09:56

Dist	COUNTY	ROUTE	POST MILES TOTAL PROJECT	SHEET No.	TOTAL SHEETS
12	Ora	91	9.1/15.1	692	949

08-12-10
REGISTERED ELECTRICAL ENGINEER DATE

10-25-10
PLANS APPROVAL DATE

REGISTERED PROFESSIONAL ENGINEER
JOANNE VO
No. E 16748
Exp. 9/30/12
ELECTRICAL
STATE OF CALIFORNIA

THE STATE OF CALIFORNIA OR ITS OFFICERS OR AGENTS SHALL NOT BE RESPONSIBLE FOR THE ACCURACY OR COMPLETENESS OF SCANNED COPIES OF THIS PLAN SHEET.

FOR ACCURATE RIGHT OF WAY AND ACCESS DATA,
CONTACT RIGHT OF WAY ENGINEERING AT THE DISTRICT OFFICE.

NOTE: (THIS SHEET ONLY)

FOR GENERAL NOTES, LEGEND, AND ABBREVIATIONS, SEE SHEET E-1 AND E-2.

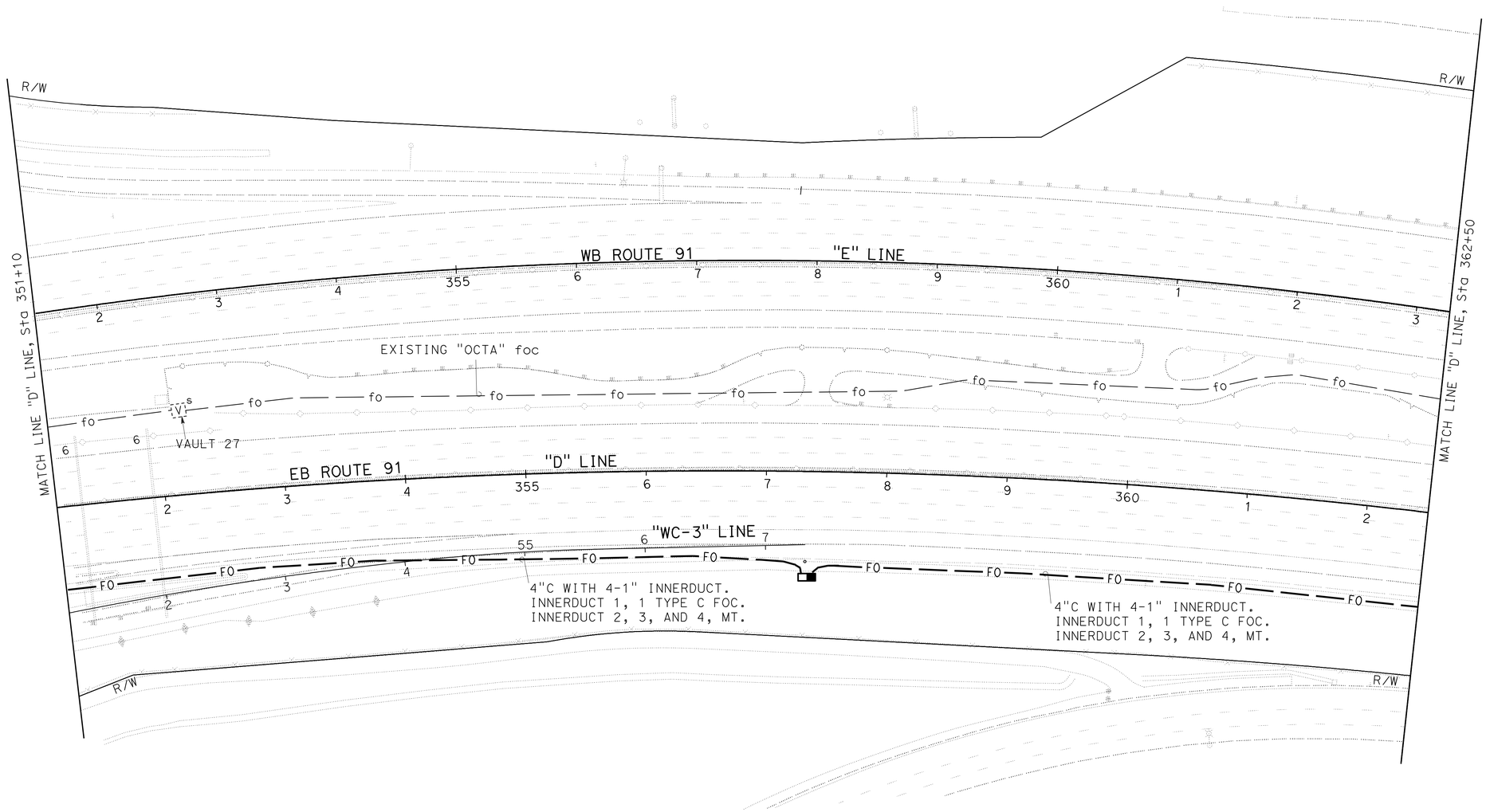

COMMUNICATION SYSTEM

SCALE: 1" = 50'

E-117

THIS PLAN IS ACCURATE FOR ELECTRICAL WORK ONLY.

CALCULATED/DESIGNED BY	JOANNE VO
CHECKED BY	SHAHRAM SHAHRIARI
REVISED BY	
DATE REVISED	

PROJECT ENGINEER
SHAHRAM SHAHRIARI

STATE OF CALIFORNIA - DEPARTMENT OF TRANSPORTATION
Caltrans
ELECTRICAL DESIGN

LAST REVISION 01-01-09
DATE PLOTTED => 16-DEC-2010
TIME PLOTTED => 17:20

FOR REDUCED PLANS ORIGINAL 0 20 40 60 80

USERNAME => trphils
DGN FILE => c0g330ua119.dgn

CU 12390

EA 0G3301

DIST	COUNTY	ROUTE	POST MILE TOTAL PROJECT	SHEET No	TOTAL SHEETS
12	Ora	91	9.1/15.1	693	949

08-12-10
REGISTERED ELECTRICAL ENGINEER

10-25-10
PLANS APPROVAL DATE

REGISTERED PROFESSIONAL ENGINEER
JOANNE VO
No. E 16748
Exp. 9/30/12
ELECTRICAL
STATE OF CALIFORNIA

The State of California or its officers or agents shall not be responsible for the accuracy or completeness of electronic copies of this plan sheet.

FOR ACCURATE RIGHT OF WAY AND ACCESS DATA,
CONTACT RIGHT OF WAY ENGINEERING AT THE DISTRICT OFFICE.

CONDUCTOR AND CONDUIT SCHEDULE

CONDUCTOR TYPE	1	2 *
TYPE C CABLE	1(R)/1(N)	1(E)
CONDUIT SIZE	4"(E)	3"(E)

(R): RC EXISTING CONDUIT OR CONDUCTOR
(E): EXISTING CONDUIT OR CONDUCTOR
(N): NEW CONDUIT OR CONDUCTOR
(*): OCTA CABLE, SEE SHEET E-87

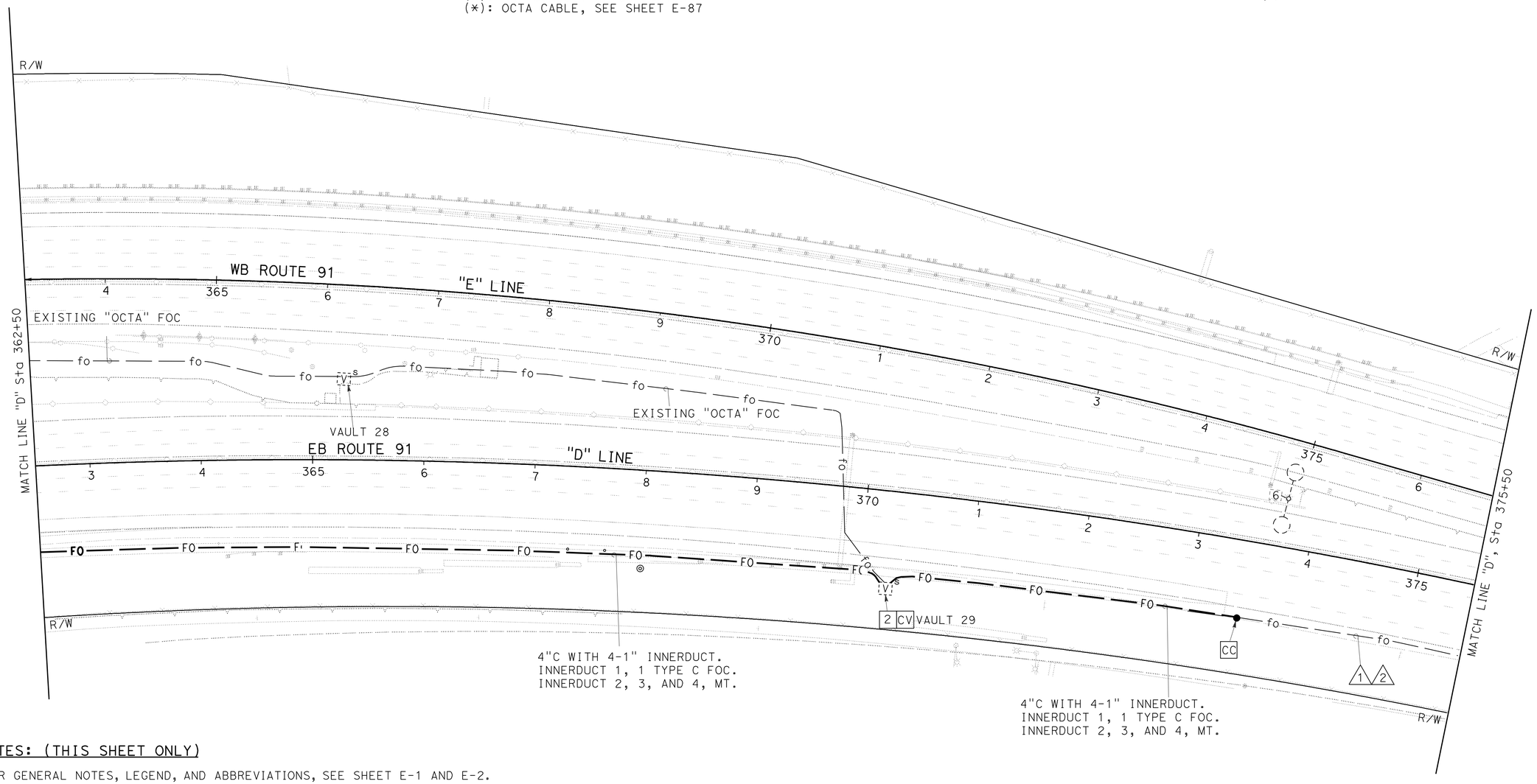

NOTES: (THIS SHEET ONLY)

1. FOR GENERAL NOTES, LEGEND, AND ABBREVIATIONS, SEE SHEET E-1 AND E-2.

2 FOR ELEMENTS SCHEMATIC, SEE SHEET E-59 AND E-60.
FOR FOC ASSIGNMENT, SEE SHEET E-120.

COMMUNICATION SYSTEM

SCALE: 1" = 50'

THIS PLAN IS ACCURATE FOR ELECTRICAL WORK ONLY.

E-118

REVISED BY	DATE REVISED
JOANNE VO	SHAHRAM SHAHRIARI
CALCULATED/DESIGNED BY	CHECKED BY
PROJECT ENGINEER	SHAHRAM SHAHRIARI

STATE OF CALIFORNIA - DEPARTMENT OF TRANSPORTATION
Caltrans
ELECTRICAL DESIGN

LAST REVISION 08-05-10
DATE PLOTTED => 16-DEC-2010
TIME PLOTTED => 17:21

FOR REDUCED PLANS ORIGINAL 0 20 40 60 80
USERNAME => trphils
DGN FILE => c0g330ua120.dgn
CU 12390
EA 0G3301

DIST	COUNTY	ROUTE	POST MILE TOTAL PROJECT	SHEET No	TOTAL SHEETS
12	Ora	91	9.1/15.1	694	949

08-12-10
REGISTERED ELECTRICAL ENGINEER

10-25-10
PLANS APPROVAL DATE

REGISTERED PROFESSIONAL ENGINEER JOANNE VO No. E 16748 Exp. 9/30/12 ELECTRICAL STATE OF CALIFORNIA

The State of California or its officers or agents shall not be responsible for the accuracy or completeness of electronic copies of this plan sheet.

FOR ACCURATE RIGHT OF WAY AND ACCESS DATA,
CONTACT RIGHT OF WAY ENGINEERING AT THE DISTRICT OFFICE.

CONDUCTOR AND CONDUIT SCHEDULE

CONDUCTOR TYPE	1 *	2	3
TYPE C CABLE	1(E)	1(E)	1(R)/1(N)
CONDUIT SIZE	3"(E)	4"(E)	4"(E)

(N): NEW CONDUIT OR CONDUCTOR
(E): EXISTING CONDUIT OR CONDUCTOR
(R): RC CONDUIT OR CONDUCTOR
(*): OCTA CONDUIT, SEE SHEET E-91

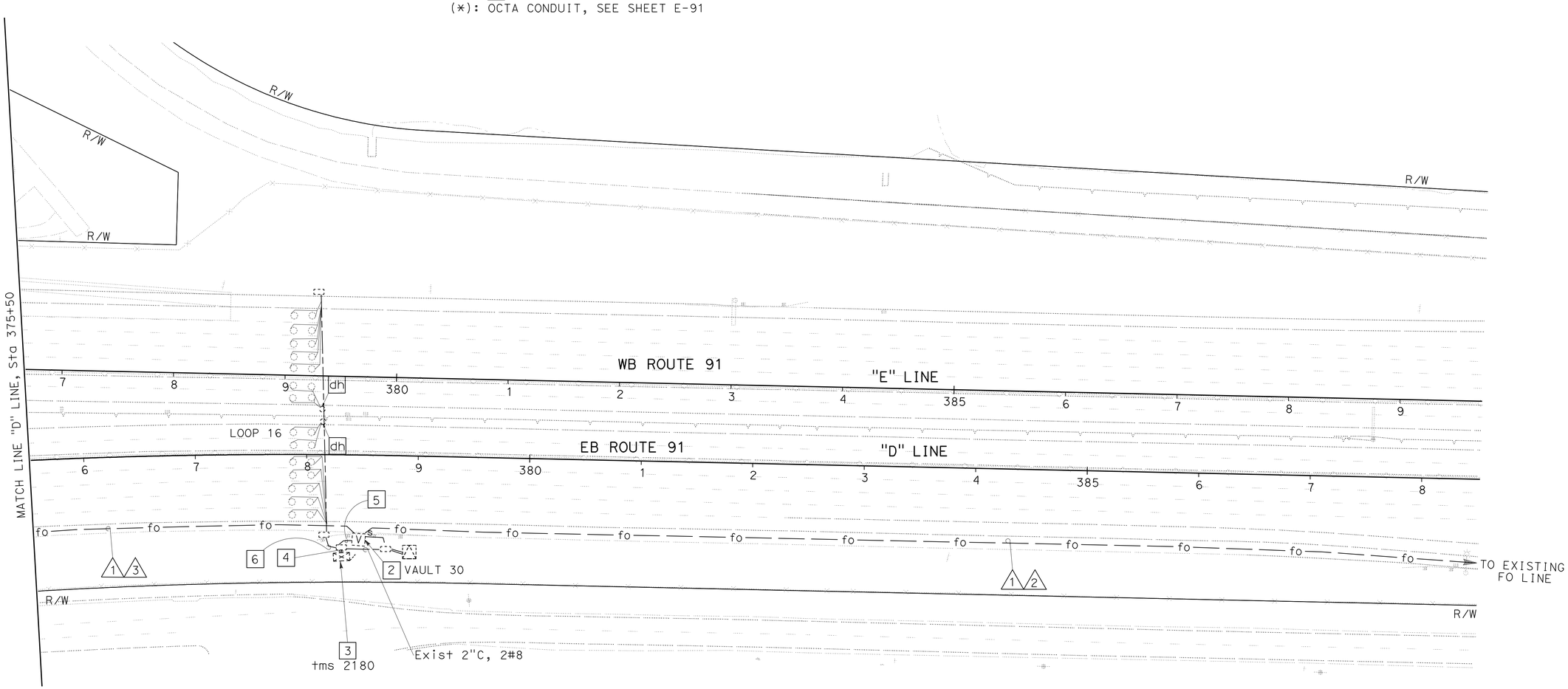

NOTES: (THIS SHEET ONLY)

1. FOR GENERAL NOTES, LEGEND, AND ABBREVIATIONS, SEE SHEET E-1 AND E-2.

2. SPLICE NEW TYPE C SMFO TO EXISTING TYPE C smfo, FIBER TO FIBER. (SEE SHEET E-59, E-60, AND E-120 FOR SPLICING SCHEDULE).

3. TWO EXISTING MODEL 170 CONTROLLER ASSEMBLIES IN MODEL 334 CONTROLLER CABINET. REMOVE EXISTING STATE COMMUNICATION EQUIPMENT. INSTALL 1 EES, 1 DE, 1 FDU. SEE CONTROLLER INTERFACE IN SHEET E-121.

4. EXISTING 2-3"C, 2 TYPE D foc. 2#8, 28 dlc. SEE SHEET E-89 FOR REFERENCE.

5. EXISTING 1 TYPE D foc.

6. EXISTING 2"C, 28 dlc.

COMMUNICATION SYSTEM

SCALE: 1" = 50'

THIS PLAN IS ACCURATE FOR ELECTRICAL WORK ONLY.

E-119

CALCULATED/DESIGNED BY	JOANNE VO
CHECKED BY	SHAHRAM SHAHRIARI
REVISED BY	
DATE REVISED	
PROJECT ENGINEER	SHAHRAM SHAHRIARI

STATE OF CALIFORNIA - DEPARTMENT OF TRANSPORTATION
Caltrans
ELECTRICAL DESIGN

LAST REVISION 01-01-09 | DATE PLOTTED => 17-DEC-2010 | TIME PLOTTED => 09:56

RELATIVE BORDER SCALE IS IN INCHES 0 1 2 3

USERNAME => trmikesl
DGN FILE => c0g330ug121.dgn

CU 12390 | EA 0G3301

Dist	COUNTY	ROUTE	POST MILES TOTAL PROJECT	SHEET No.	TOTAL SHEETS
12	Ora	91	9.1/15.1	695	949

REGISTERED ELCTRICAL ENGINEER 08-12-10 DATE

10-25-10
PLANS APPROVAL DATE

REGISTERED PROFESSIONAL ENGINEER PETER NGO No. E 16503 Exp. 9/30/11 ELECTRICAL STATE OF CALIFORNIA

THE STATE OF CALIFORNIA OR ITS OFFICERS OR AGENTS SHALL NOT BE RESPONSIBLE FOR THE ACCURACY OR COMPLETENESS OF ELECTRONIC COPIES OF THIS PLAN SHEET.

NOTE: (THIS SHEET ONLY)

1. FOR GENERAL NOTES, LEGEND, AND ABBREVIATIONS, SEE SHEET E-1, E-2.

CALTRANS 72 SMFO

FIBER No.	HUB 2 SR 91/SR 55	CMS 82 WB 91 LAKEVIEW Ave	TS EB 91 SANTA ANA CANYON Rd	RMS 1118 WB 91 LAKEVIEW Ave 2	RMS 1119 WB 91 LAKEVIEW Ave 1	RMS 1101 EB 91 LAKEVIEW Ave 2	TS WB 91 LAKEVIEW Ave	RMS 1100 EB 91 LAKEVIEW Ave 1	TMS 5000 EB 91 W OF IMPERIAL Hwy	RMS 1102 EB 91 IMPERIAL Hwy 1	TS WB 91 IMPERIAL Hwy OFF-RAMP	RMS 1103 EB 91 IMPERIAL Hwy 2	TS EB 91 IMPERIAL Hwy OFF-RAMP	CMS 69 EB 91 IMPERIAL Hwy	RMS 1116 WB 91 IMPERIAL Hwy 2	RMS 1117 WB 91 IMPERIAL Hwy 1	TMS 2178 EB 91 E OF IMPERIAL Hwy	TMS 5001 EB 91 MID POINT	TMS 2179 EB 91 E OF SCALE	CCTV 04 EB 91 AT SCALE	TS EB 91 WEIR CANYON OFF-RAMP	RMS 1115 WB 91 WEIR CANYON Rd 1	RMS 1114 WB 91 WEIR CANYON Rd 2	RMS 1105 EB 91 WEIR CANYON Rd 1	RMS 1106 EB 91 WEIR CANYON Rd 2	TS WB 91 WEIR CANYON Rd OFF-RAMP	TMS 2180 EB 91 E OF WEIR CANYON Rd	SPLICE VAULT 30 EB 91 WEIR CANYON Rd	REMARKS
1																												1	
2																												2	
3	X>															<1 4>	<1 4>	<1 4>	<1 4>	<1 4>			<1 4>	<1 4>					3	TMS 31
4	X>															<2 3>	<2 3>	<2 3>	<2 3>	<2 3>			<2 3>	<2 3>					4	TMS 31
5	X>																												5	
6	X>																												6	
7	X>																								<1 4>	<1 4>		<1 4>	7	TMS 38
8	X>																								<2 3>	<2 3>		<2 3>	8	TMS 38
9	X>	<1 4>												<1 4>															9	CMS 13
10	X>	<2 3>												<2 3>															10	CMS 13
11	X>			<1 4>	<1 4>	<1 4>		<1 4>	<1 4>	<1 4>		<1 4>																	11	TMS 30
12	X>			<2 3>	<2 3>	<2 3>		<2 3>	<2 3>	<2 3>		<2 3>																	12	TMS 30
13-18																												13-18	
19	X>		<1 4>				<1 4>				<1 4>		<1 4>								<1 4>				<1 4>			19	TS 13
20	X>		<2 3>				<2 3>				<2 3>		<2 3>								<2 3>				<2 3>			20	TS 13
21-30																												21-30	
31	X>																			<1 4>								31	CCR 13
32	X>																			<2 3>								32	CCR 13
33-72																												33-72	

LEGEND: (THIS SHEET ONLY)

< > ARROW POINTS TO THE DIRECTION OF TRANSMISSION

1, 2, 3, 4 NUMBER REPRESENTS STRAND NUMBER OF TYPE D FIBER OPTIC

THIS PLAN IS ACCURATE FOR ELECTRICAL WORK ONLY.

COMMUNICATION SYSTEM
(FIBER ASSIGNMENT TABLE)

E-120

CALCULATED-DESIGNED BY: PETER NGO
CHECKED BY: PAULINE NGUYEN
REVISED BY
DATE REVISED
FUNCTIONAL SUPERVISOR: HENRY PHAM

STATE OF CALIFORNIA - DEPARTMENT OF TRANSPORTATION
ELECTRICAL SYSTEMS
Caltrans

LAST REVISION 08-01-10 | DATE PLOTTED => 16-DEC-2010 | TIME PLOTTED => 17:21

DIST	COUNTY	ROUTE	KILOMETER POST TOTAL PROJECT	SHEET NO.	TOTAL SHEETS
12	Ora	91	9.1/15.1	696	949

REGISTERED ELECTRICAL ENGINEER — DATE 08-12-10

10-25-10
PLANS APPROVAL DATE

REGISTERED PROFESSIONAL ENGINEER — PETER NGO No. E 16503 Exp. 9/30/11 ELECTRICAL — STATE OF CALIFORNIA

The State of California or its officers or agents shall not be responsible for the accuracy or completeness of electronic copies of this plan sheet.

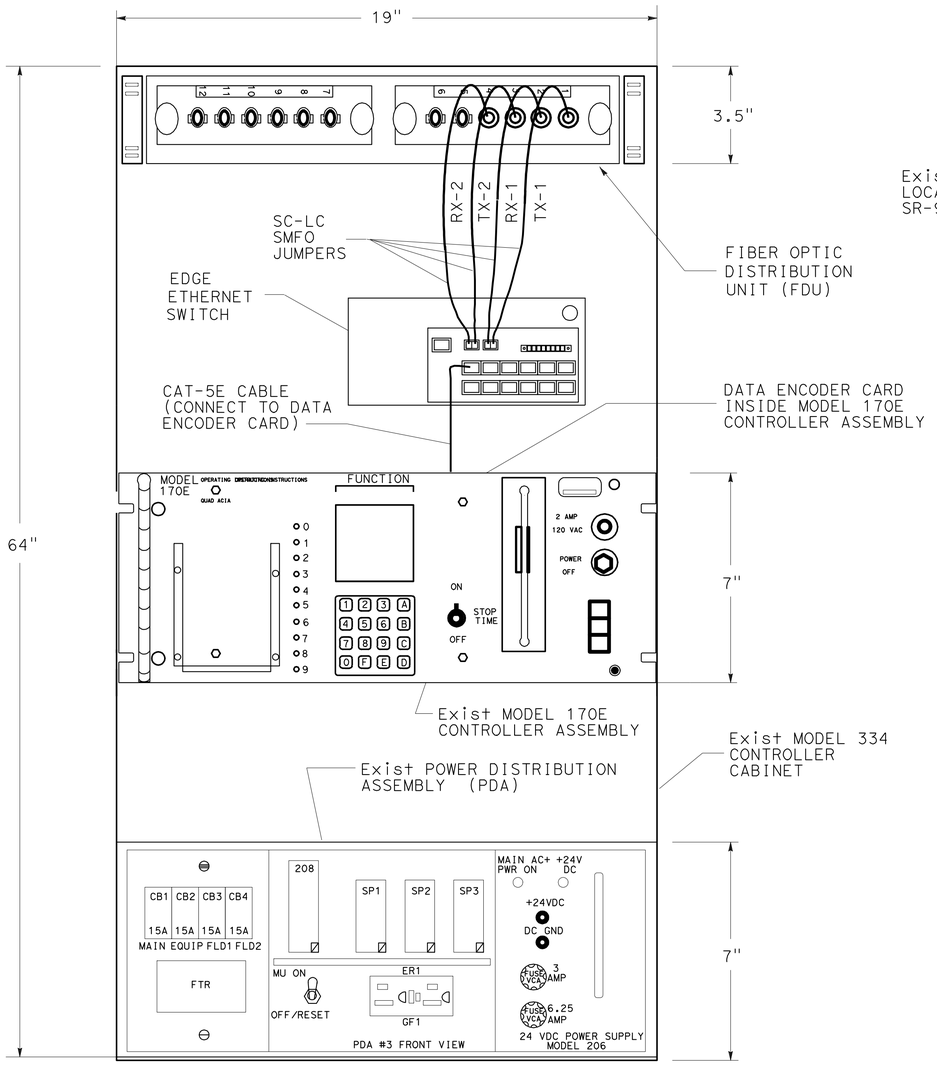

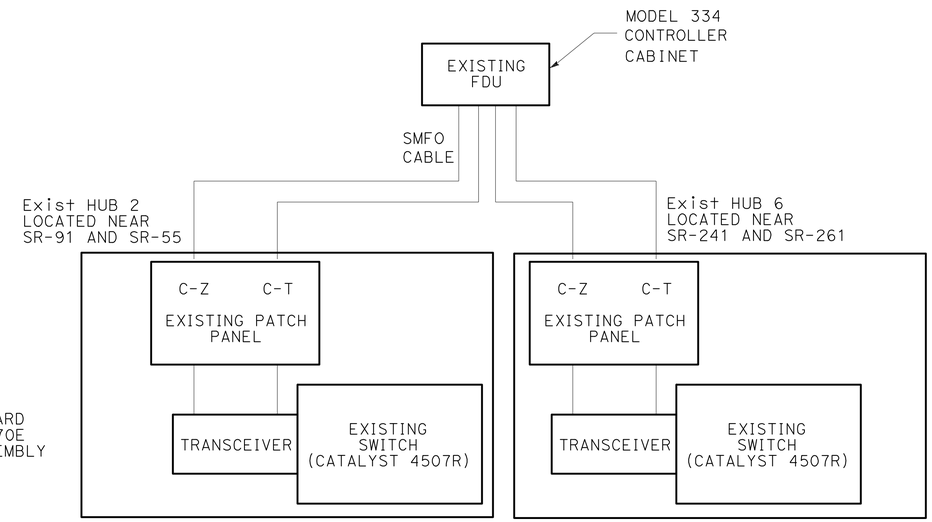

TYPICAL CONNECTION FROM FIELD ELEMENTS TO THE EXISTING SWITCH AT THE HUB

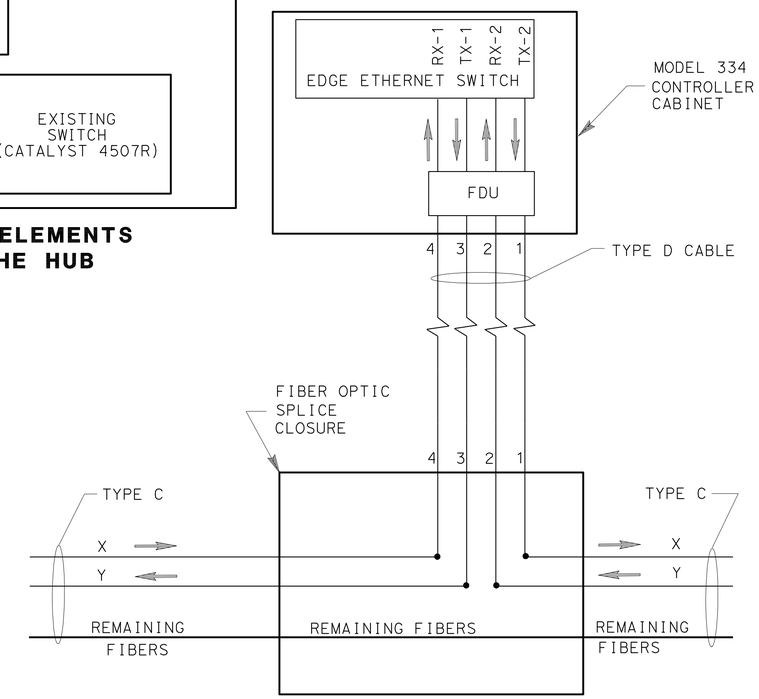

TYPICAL CONNECTION OF TYPE D TO TYPE C

FIBER ASSIGNMENTS			
TRAFFIC ELEMENTS	TYPE CABLE	X	Y
CMS 13	C	9	10
TMS 30	C	11	12
TMS 31	C	3	4
TMS 38	C	7	8
TS 13	C	19	20

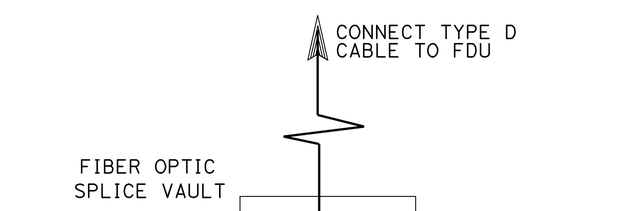

CONTROLLER INTERFACE

NOTES: (THIS SHEET ONLY)

1. REMOVE MODEL 400 MODEM CARD FROM 170E CONTROLLER.
2. INSTALL DATA ENCODER CARD WITH 5-FOOT RJ-45 CABLE (CAT-5E) TO MODEM SLOT OF 170E CONTROLLER.
3. CONNECT OTHER END PLUG OF CAT-5E CABLE TO 1X RJ-45 SOCKET OF EDGE ETHERNET SWITCH.
4. INSTALL 4 SMFO SC-LC JUMPERS BETWEEN EDGE ETHERNET SWITCH AND FDU.

LEGEND: (THIS SHEET ONLY)

TX-1: TRANSMIT UPSTREAM TO EDGE ETHERNET SWITCH
RX-1: RECEIVE DOWNSTREAM FROM EDGE ETHERNET SWITCH
TX-2: TRANSMIT DOWNSTREAM FROM EDGE ETHERNET SWITCH
RX-2: RECEIVE UPSTREAM FROM EDGE ETHERNET SWITCH

FOR GENERAL NOTES, LEGEND, AND ABBREVIATIONS SEE SHEET E-1 AND SHEET E-2.
THIS PLAN IS ACCURATE FOR ELECTRICAL WORK ONLY.

COMMUNICATION SYSTEM
(MODEL 170 CONTROLLER INTERFACE)

NO SCALE

E-121

REVISED BY	VIET NGO
DATE REVISED	PETER NGO
CALCULATED/DESIGNED BY	
CHECKED BY	
PROJECT ENGINEER	HENRY PHAM

STATE OF CALIFORNIA - DEPARTMENT OF TRANSPORTATION
Caltrans
ELECTRICAL SYSTEMS

LAST REVISION 08-02-10
DATE PLOTTED => 16-DEC-2010
TIME PLOTTED => 17:21

FOR REDUCED PLANS ORIGINAL SCALE IS IN MILLIMETERS 0 1 2 3 4
USERNAME =>trphils
DGN FILE =>c0g330ua123.dgn
CU 12391
EA 0G3301

Dist	COUNTY	ROUTE	POST MILES TOTAL PROJECT	SHEET No.	TOTAL SHEETS
12	Ora	91	9.1/15.1	697	949

Peter Ngo 08-12-10
REGISTERED ELECTRICAL ENGINEER DATE

10-25-10
PLANS APPROVAL DATE

REGISTERED PROFESSIONAL ENGINEER
PETER NGO
No. E 16503
Exp. 9/30/11
ELECTRICAL
STATE OF CALIFORNIA

THE STATE OF CALIFORNIA OR ITS OFFICERS OR AGENTS SHALL NOT BE RESPONSIBLE FOR THE ACCURACY OR COMPLETENESS OF SCANNED COPIES OF THIS PLAN SHEET.

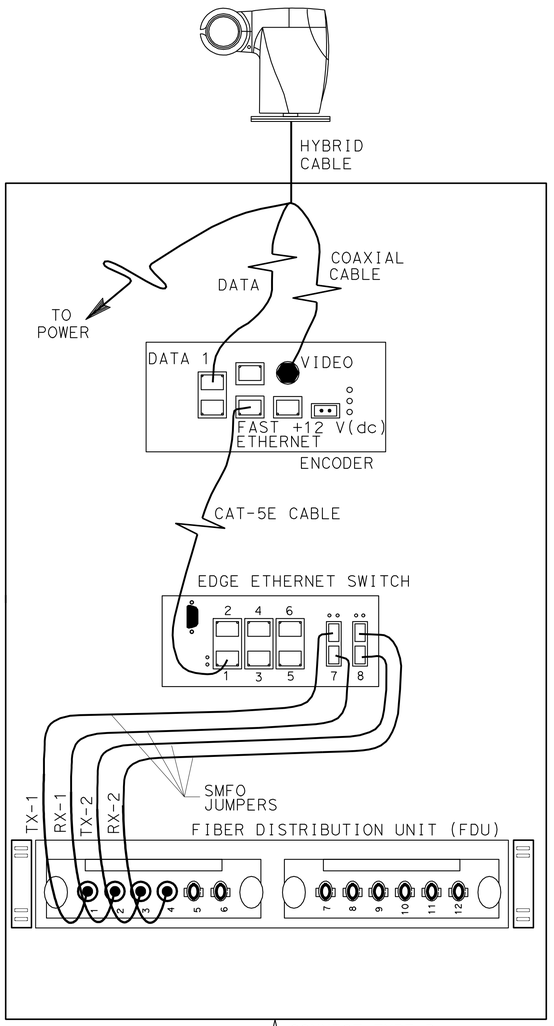

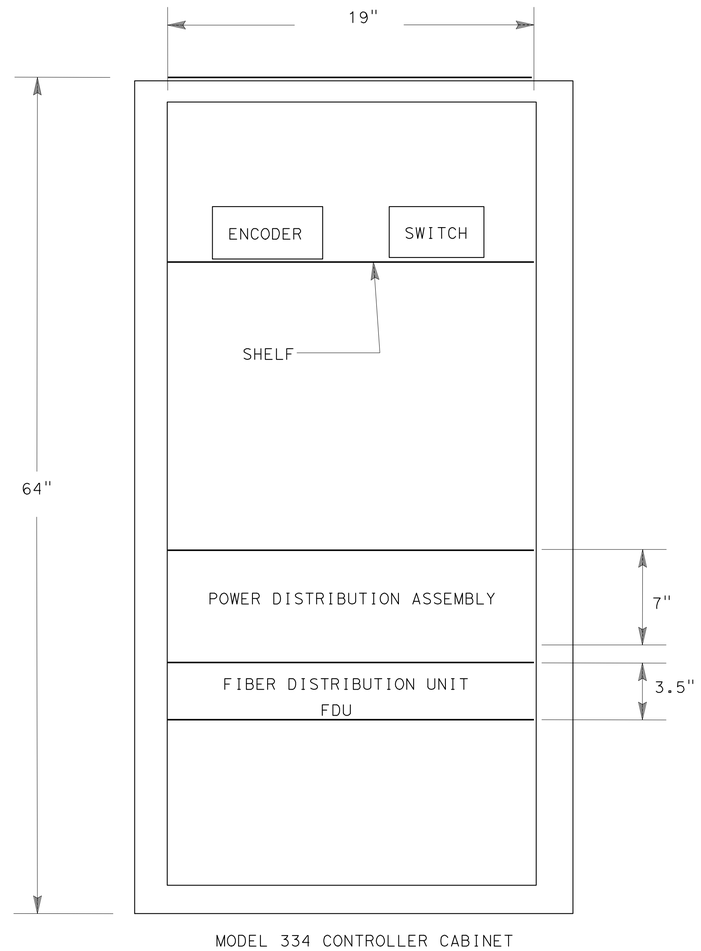

TYPICAL EQUIPMENT LAYOUT FOR CCTV CONTROLLER CABINET

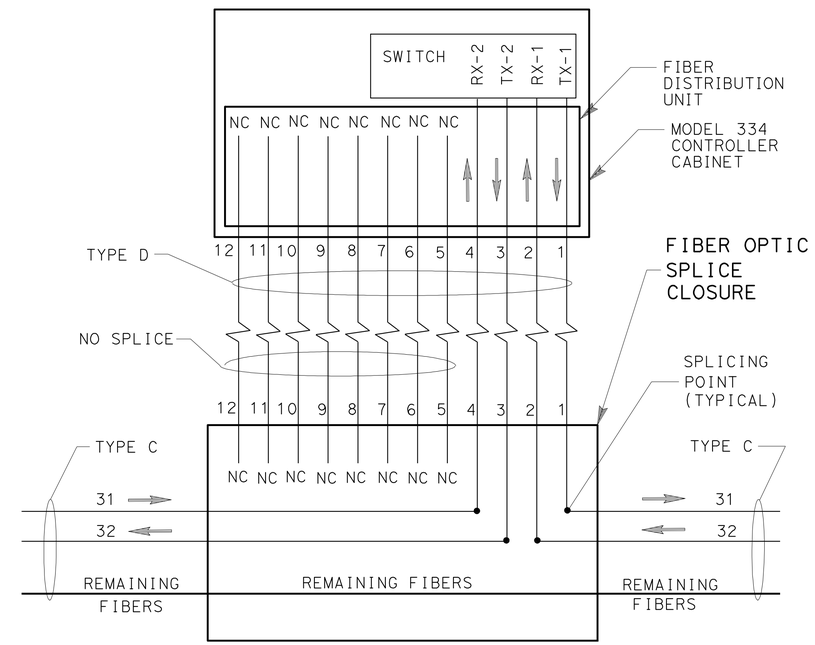

TYPICAL CONNECTION FOR TYPE D TO TYPE C

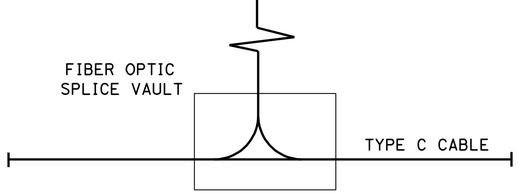

TYPICAL CCTV INTERFACE

LEGEND: (THIS SHEET ONLY)

TX-1: TRANSMIT UPSTREAM TO SWITCH
RX-1: RECEIVE DOWNSTREAM FROM SWITCH
TX-2: TRANSMIT DOWNSTREAM FROM SWITCH
RX-2: RECEIVE UPSTREAM FROM SWITCH
NC: NO CONTACT

FOR NOTES AND LEGEND SEE SHEET E-77.
THIS PLAN IS ACCURATE FOR ELECTRICAL WORK ONLY.

COMMUNICATION SYSTEM
(CCTV INTERFACE)

NO SCALE

E-122

REVISED BY	DATE REVISED

CALCULATED/DESIGNED BY	VIET NGO
CHECKED BY	PETER NGO

PROJECT ENGINEER: HENRY PHAM

STATE OF CALIFORNIA - DEPARTMENT OF TRANSPORTATION
Caltrans ELECTRICAL SYSTEMS

LAST REVISION 01-13-10
DATE PLOTTED => 16-DEC-2010
TIME PLOTTED => 17:21

FOR REDUCED PLANS ORIGINAL SCALE IS IN MILLIMETERS 0

USERNAME => trphils
DGN FILE => c0g330ua124.dgn

CU 12391 EA 0G3301

Dist	COUNTY	ROUTE	POST MILES TOTAL PROJECT	SHEET No.	TOTAL SHEETS
12	Ora	91	9.1/15.1	698	949

REGISTERED ELECTRICAL ENGINEER 08-12-10 DATE

10-25-10
PLANS APPROVAL DATE

REGISTERED PROFESSIONAL ENGINEER JOANNE VO No. E 16748 Exp. 9/30/12 ELECTRICAL STATE OF CALIFORNIA

THE STATE OF CALIFORNIA OR ITS OFFICERS OR AGENTS SHALL NOT BE RESPONSIBLE FOR THE ACCURACY OR COMPLETENESS OF SCANNED COPIES OF THIS PLAN SHEET.

FOR ACCURATE RIGHT OF WAY AND ACCESS DATA,
CONTACT RIGHT OF WAY ENGINEERING AT THE DISTRICT OFFICE.

NOTES: (THIS SHEET ONLY)

1. INSTALL NEW TYPE CCTV-45 POLE AND NEW CCTV AT "E" LINE, Sta 311+00. THE NEW CCTV INTERFACE SHOULD BE COMPATIBLE WITH EXISTING EQUIPMENT.
2. RELOCATE EXISTING MODEL 170 CONTROLLER ASSEMBLY.
3. FOR GENERAL NOTES, LEGEND, AND ABBREVIATIONS, SEE SHEET E-1 AND E-2.
4. RS EXISTING CCTV POLE AND CCTV ASSEMBLY.
5. Exist 1 TYPE D, SEE foc REFERENCE IN SHEET E-112.
6. FOR CCTV DETAILS, SEE SHEET E-124 AND E-125.
7. FOR CCTV INTERFACE, SEE SHEET E-122.
8. FOR FIBER OPTIC ASSIGNMENT, SEE SHEET E-120.

CONDUCTOR AND CONDUIT SCHEDULE

CONDUCTOR TYPE	1	2	3	4
TYPE C CABLE	1(E)			
MULTI-CONDUCTORS CABLE	-		1(N)	1(N)
3#8 POWER CABLE		1(N)		1(N)
1#8 GROUND WIRE			1(N)	1(N)
TYPE D CABLE				1(E)
CONDUIT SIZE	4"(E)	2"(N)	2"(N)	2-3"(E)

(N): NEW CONDUIT OR CONDUCTOR
(E): EXISTING CONDUIT OR CONDUCTOR

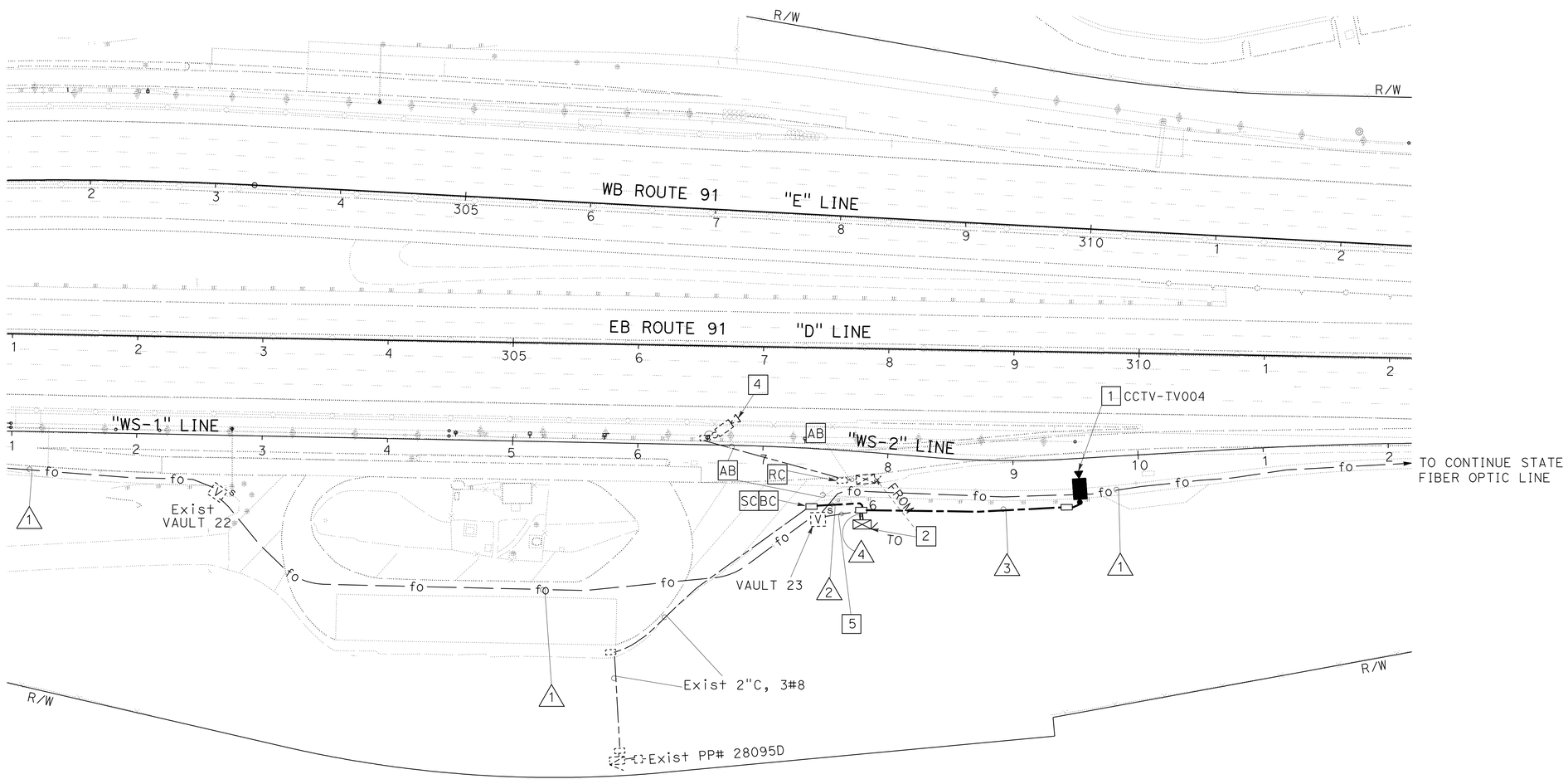

CLOSED CIRCUIT TELEVISION SYSTEM

SCALE: 1" = 50'

E-123

THIS PLAN IS ACCURATE FOR ELECTRICAL WORK ONLY.

STATE OF CALIFORNIA - DEPARTMENT OF TRANSPORTATION
Caltrans ELECTRICAL DESIGN

FUNCTIONAL SUPERVISOR: S. SHAHRIARI
CALCULATED-DESIGNED BY: JOANNE VO
CHECKED BY: S. SHAHRIARI
REVISED BY
DATE REVISED

LAST REVISION 01-01-09
DATE PLOTTED => 16-DEC-2010
TIME PLOTTED => 17:21

DIST	COUNTY	ROUTE	POST MILE TOTAL PROJECT	SHEET No	TOTAL SHEETS
12	Ora	91	9.1/15.1	699	949

Henry Pham 08-12-10
REGISTERED ELECTRICAL ENGINEER

10-25-10
PLANS APPROVAL DATE

REGISTERED PROFESSIONAL ENGINEER HENRY PHAM No. E 13724 Exp. 6/30/11 ELECTRICAL STATE OF CALIFORNIA

The State of California or its officers or agents shall not be responsible for the accuracy or completeness of electronic copies of this plan sheet.

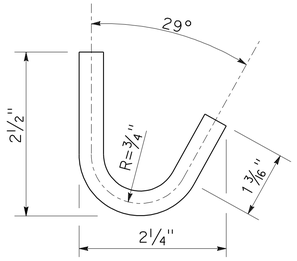

DETAIL C
J HOOK

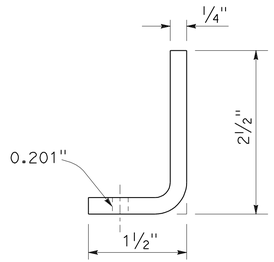

DETAIL D
SAFETY CHAIN BRACKET

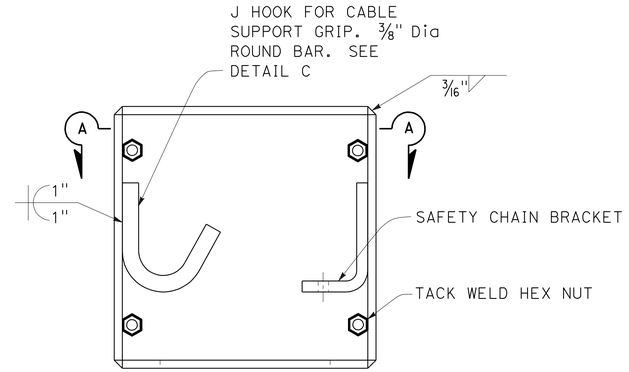

DETAIL B
BOX ENCLOSURE

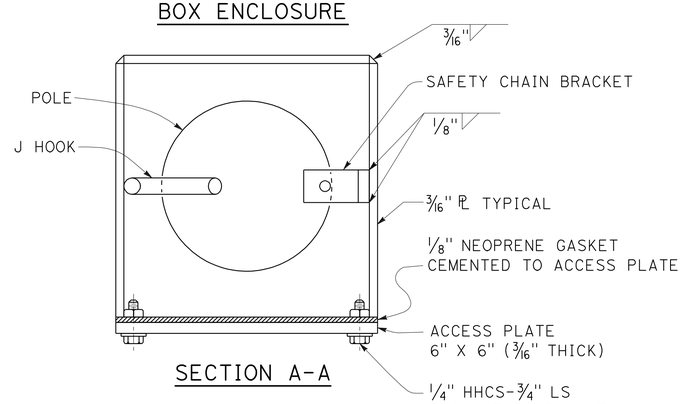

SECTION A-A

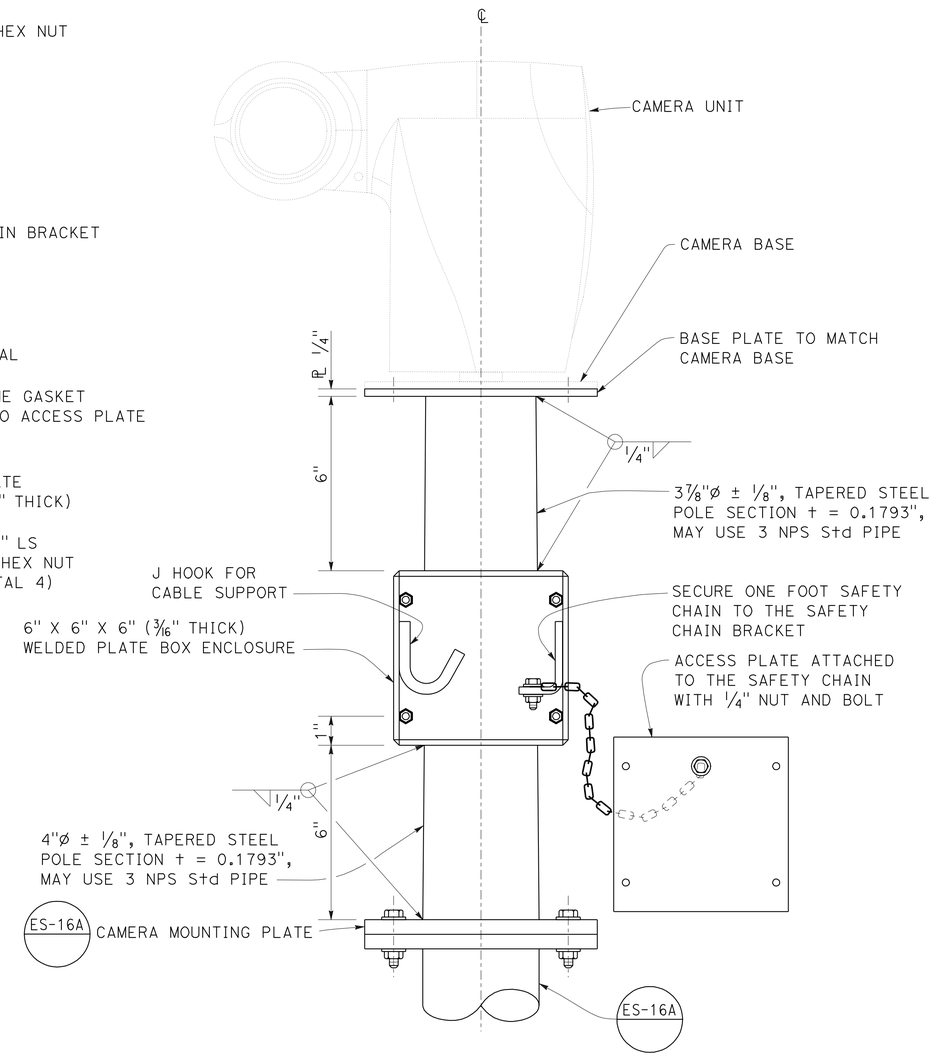

DETAIL A
CCTV POLE MOUNTING WITH ADAPTER

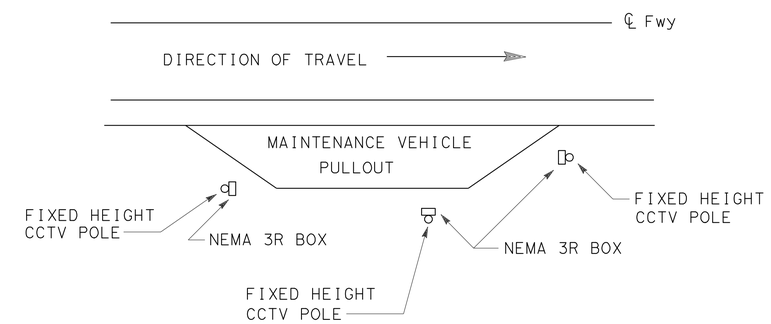

NOTE: LOCATION OF CCTV POLES SHALL NOT EXCEED 5 FT FROM THE NEAREST MVP EDGE. NEMA 3R BOX TO FACE MVP.

NEMA 3R BOX RELATIVE TO MAINTENANCE VEHICLE PULLOUT

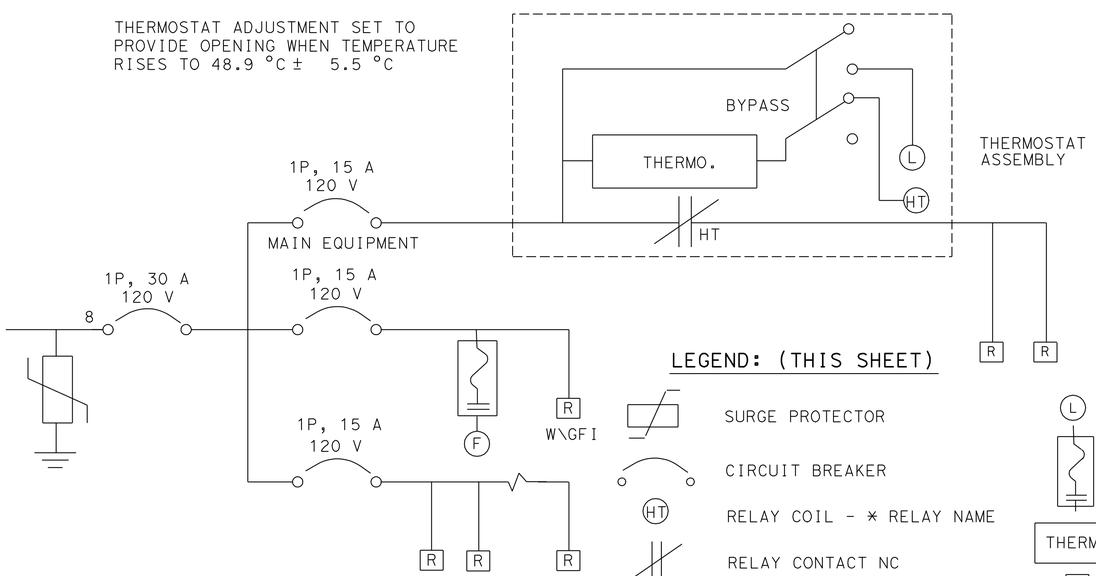

DETAIL 2
POWER DISTRIBUTION ASSEMBLY (PDA)

LEGEND: (THIS SHEET)

	SURGE PROTECTOR	L	INDICATOR LAMP
	CIRCUIT BREAKER		THERMOSTATIC CONTROL
HT	RELAY COIL - * RELAY NAME	THERMO.	ADJUSTABLE CALIBRATED THERMOSTAT
	RELAY CONTACT NC	R	DUPLEX RECEPTACLE
	WIRE SIZE, IF NOT INDICATED SHALL BE #14 AWG	W\GFI	WITH GROUND FAULT INTERRUPTOR
F	FAN	NTS	NOT TO SCALE

THIS PLAN IS ACCURATE FOR ELECTRICAL WORK ONLY.

CLOSED CIRCUIT TELEVISION SYSTEM
(CAMERA AND POWER DISTRIBUTION ASSEMBLY DETAILS)

NO SCALE

E-124

REVISED BY	DATE REVISED
CHARLIE KAY	HENRY PHAM
CALCULATED/DESIGNED BY	CHECKED BY
PROJECT ENGINEER	HENRY PHAM

STATE OF CALIFORNIA - DEPARTMENT OF TRANSPORTATION
Caltrans ELECTRICAL DESIGN

LAST REVISION 01-01-09 | DATE PLOTTED => 16-DEC-2010 TIME PLOTTED => 17:21

FOR REDUCED PLANS ORIGINAL 0 20 40 60 80 | USERNAME => trphils DGN FILE => c0g330ua126.dgn | CU 12390 | EA 0G3301

DIST	COUNTY	ROUTE	KILOMETER POST TOTAL PROJECT	SHEET No	TOTAL SHEETS
12	Ora	91	9.1/15.1	700	949

Henry Pham 08-12-10
REGISTERED ELECTRICAL ENGINEER

10-25-10
PLANS APPROVAL DATE

REGISTERED PROFESSIONAL ENGINEER HENRY PHAM No. E 13724 Exp. 6/30/11 STATE OF CALIFORNIA

The State of California or its officers or agents shall not be responsible for the accuracy or completeness of electronic copies of this plan sheet.

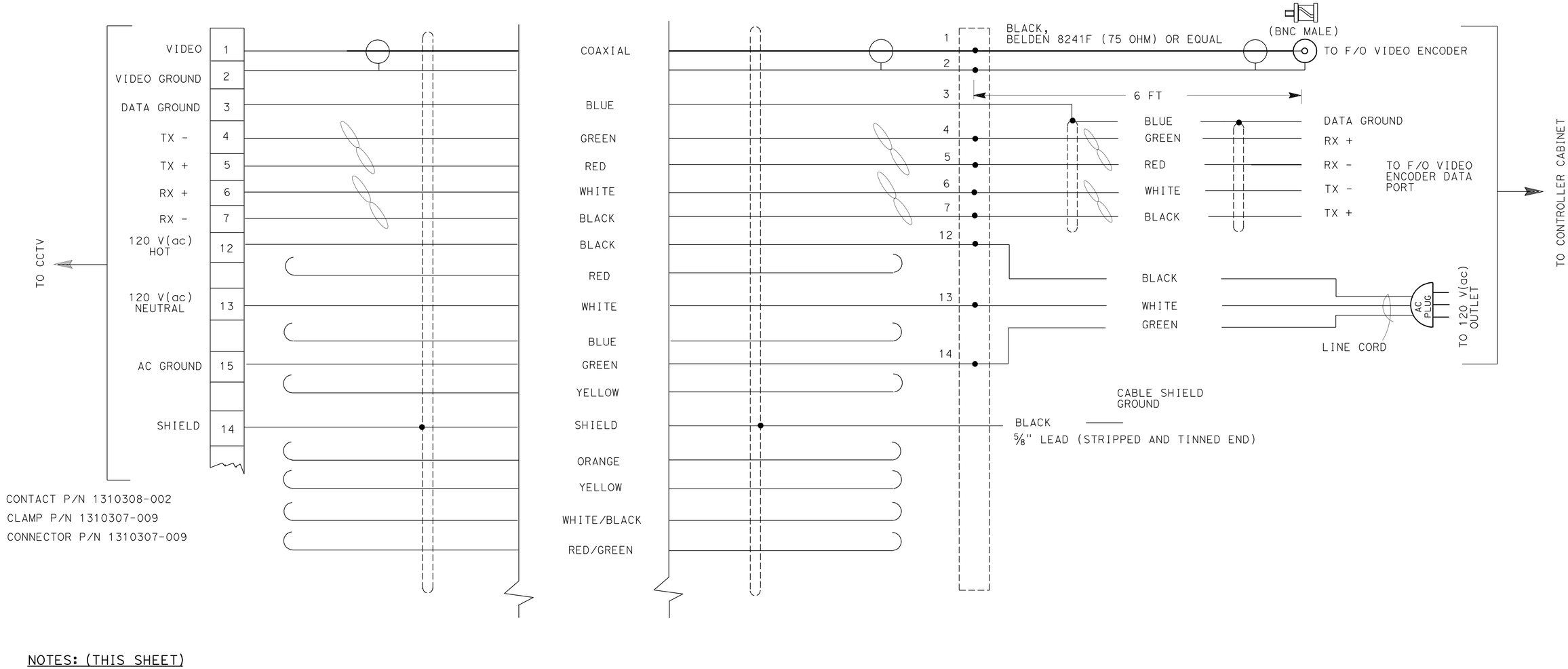

NOTES: (THIS SHEET)

1. THE OVERALL CABLE SHIELD AND DRAIN WIRES SHALL BE PIGTAILED SOLDERED TO A MINIMUM #22 AWG BLACK WIRE ON THE CABINET SIDE.
2. EXPOSED SHIELD AND SOLDER INTERFACE SHALL BE TAPED OR PROTECTED BY HEAT SHRINK TUBING.
3. THE GREEN GROUNDING WIRE SHALL BE TERMINATED TO THE CABINET GROUNDING BUS.
4. THE SHIELD SHALL ONLY BE GROUNDED AT THE CABINET END. DO NOT GROUND THE SHIELD AT THE CAMERA SIDE TO AVOID GROUND LOOPS.
5. ALL UNUSED CONDUCTORS ARE TO BE FOLDED BACK AND SECURELY TAPED. CONDUCTORS AT THE CABINET SIDE SHALL BE PROPERLY PROTECTED AND DRESSED.
6. THE COAXIAL CABLE FOR VIDEO SHALL BE BELDEN 8241F OR EQUAL (75 OHM).
7. THE DATA CONDUCTORS SHALL BE THE 2 PAIR CONDUCTOR, TWISTED WITH OVERALL SHIELD, #26 AWG.
8. THE POWER CONDUCTORS SHALL BE THE 3-CONDUCTOR, #26 AWG.
9. INSTALL CABLE AND CONDUCTOR WITHOUT SPLICES OR BREAK UNLESS OTHERWISE SHOWN.

THIS PLAN IS ACCURATE FOR ELECTRICAL WORK ONLY.

CLOSED CIRCUIT TELEVISION SYSTEM
(CCTV WIRING SCHEDULE AND PIN-OUT)

NO SCALE

E- 125

REVISED BY	DATE REVISED
CHARLIE KAY	HENRY PHAM
CALCULATED/DESIGNED BY	CHECKED BY
PROJECT ENGINEER	HENRY PHAM

STATE OF CALIFORNIA - DEPARTMENT OF TRANSPORTATION
Caltrans® ELECTRICAL SYSTEMS

LAST REVISION 04-17-10
DATE PLOTTED => 17-DEC-2010
TIME PLOTTED => 12:56