EA 0F0401

SCALE: Horiz 1"=20'
Vert 1"=10'

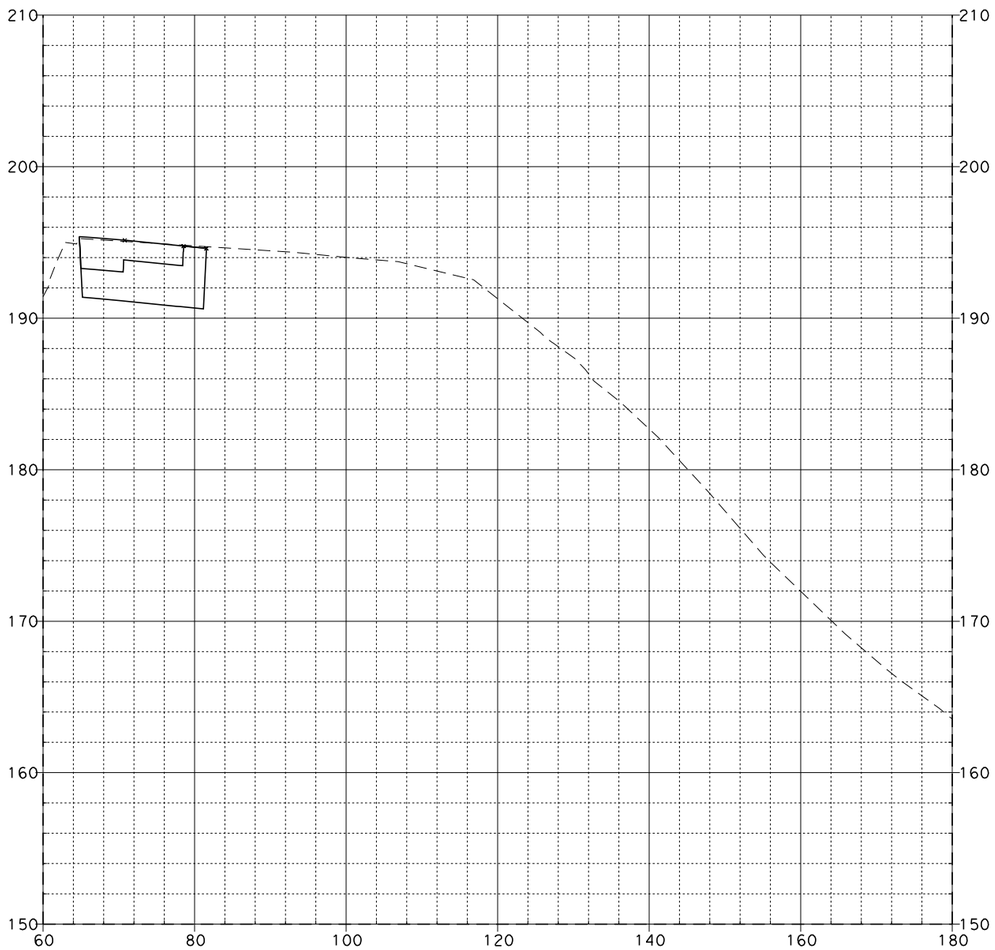

257+72.02

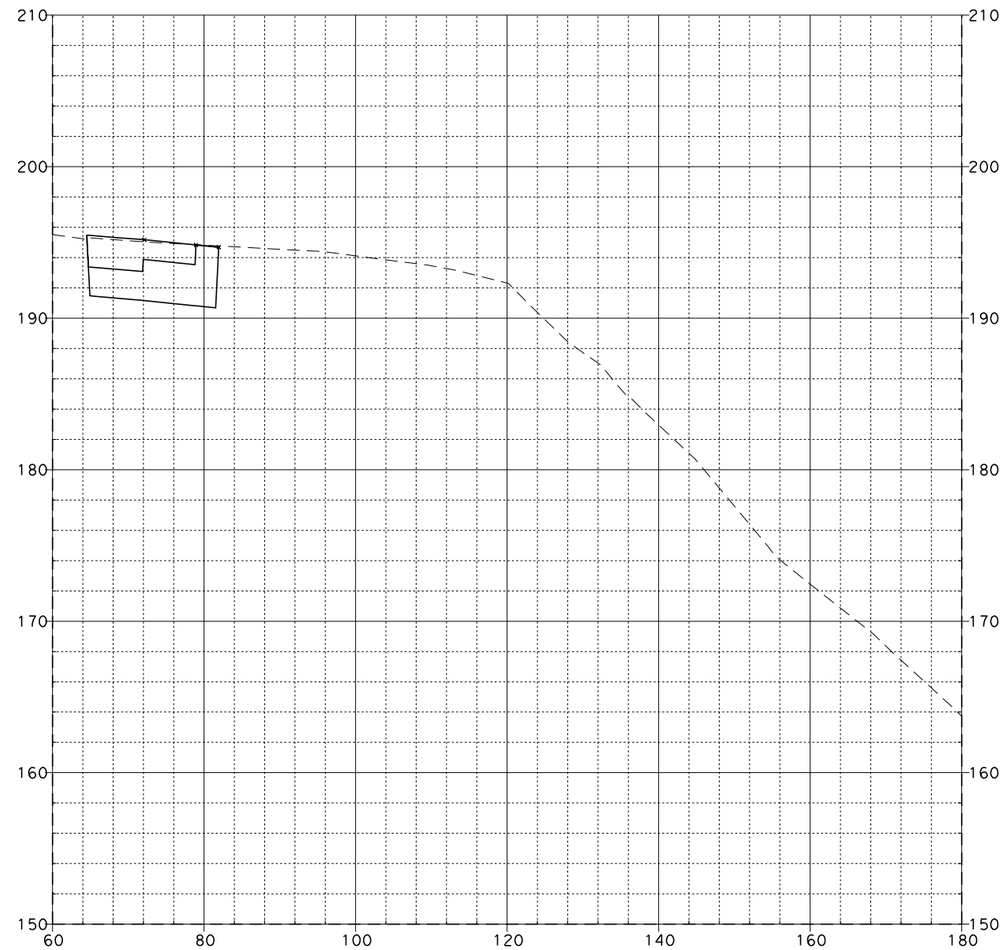

258+00.00

SR-57 MAINLINE

08\03\11

Dist	COUNTY	ROUTE	POST MILES TOTAL PROJECT	SHEET No.	TOTAL SHEETS
12	Ora	57	12.2/15.2		

FOR EARTHWORK DEVELOPMENT ONLY

...\d0282599\Cross_Sections.dgn

EA 0F0401

SCALE: Horiz 1"=20'
Vert 1"=10'

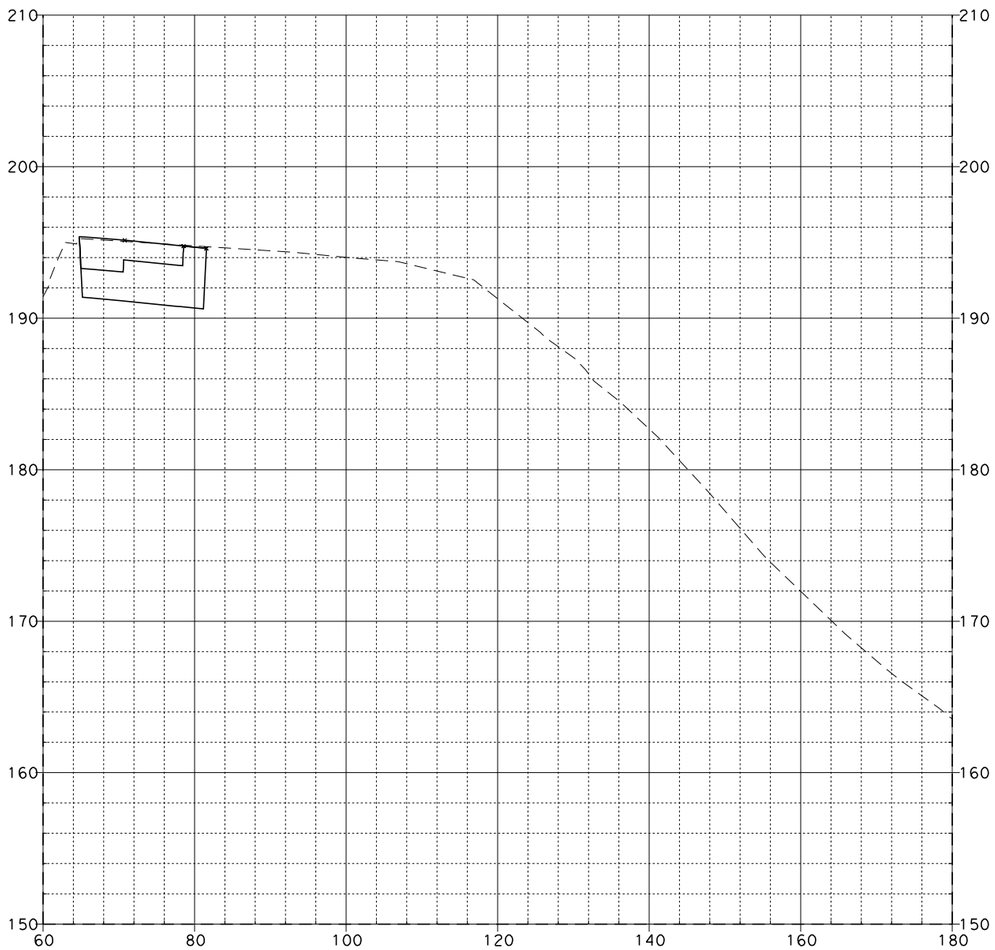

257+72.02

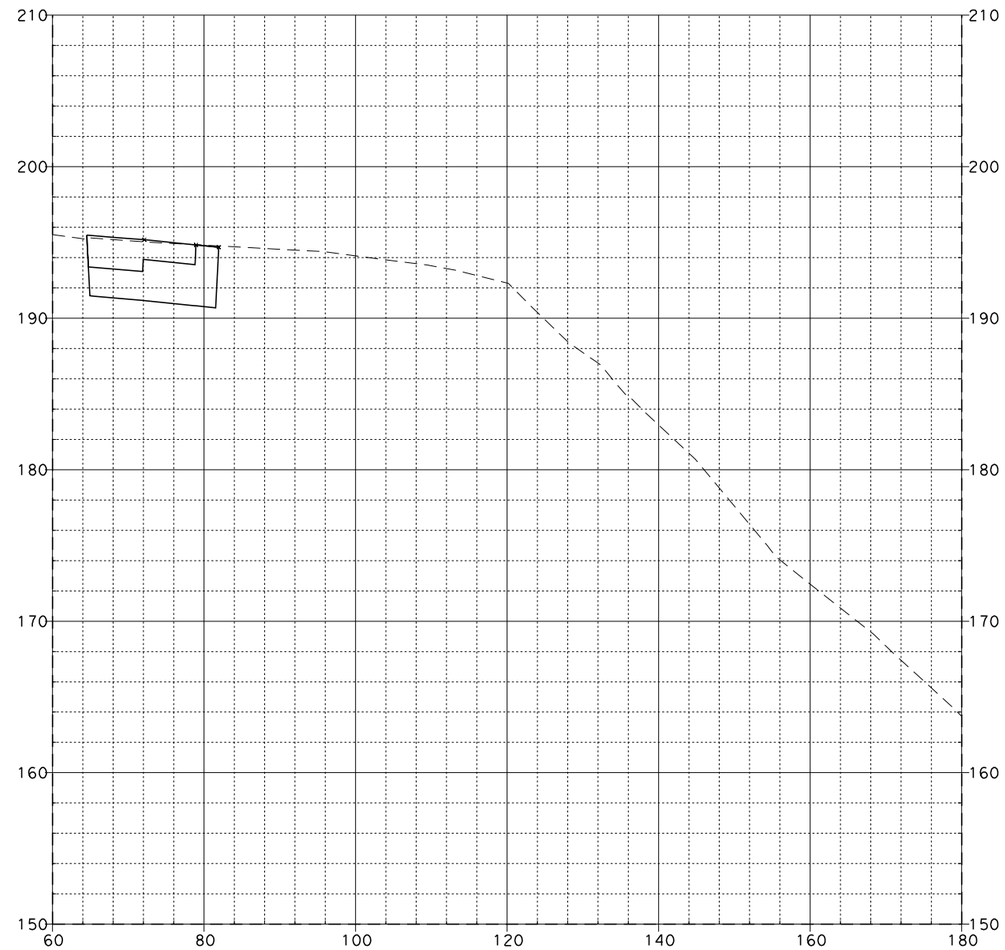

258+00.00

SR-57 MAINLINE

08\03\11

Dist	COUNTY	ROUTE	POST MILES TOTAL PROJECT	SHEET No.	TOTAL SHEETS
12	Ora	57	12.2/15.2		

FOR EARTHWORK DEVELOPMENT ONLY

...\d0282599\Cross_Sections.dgn

EA 0F0401

SCALE: Horiz 1"=20'
Vert 1"=10'

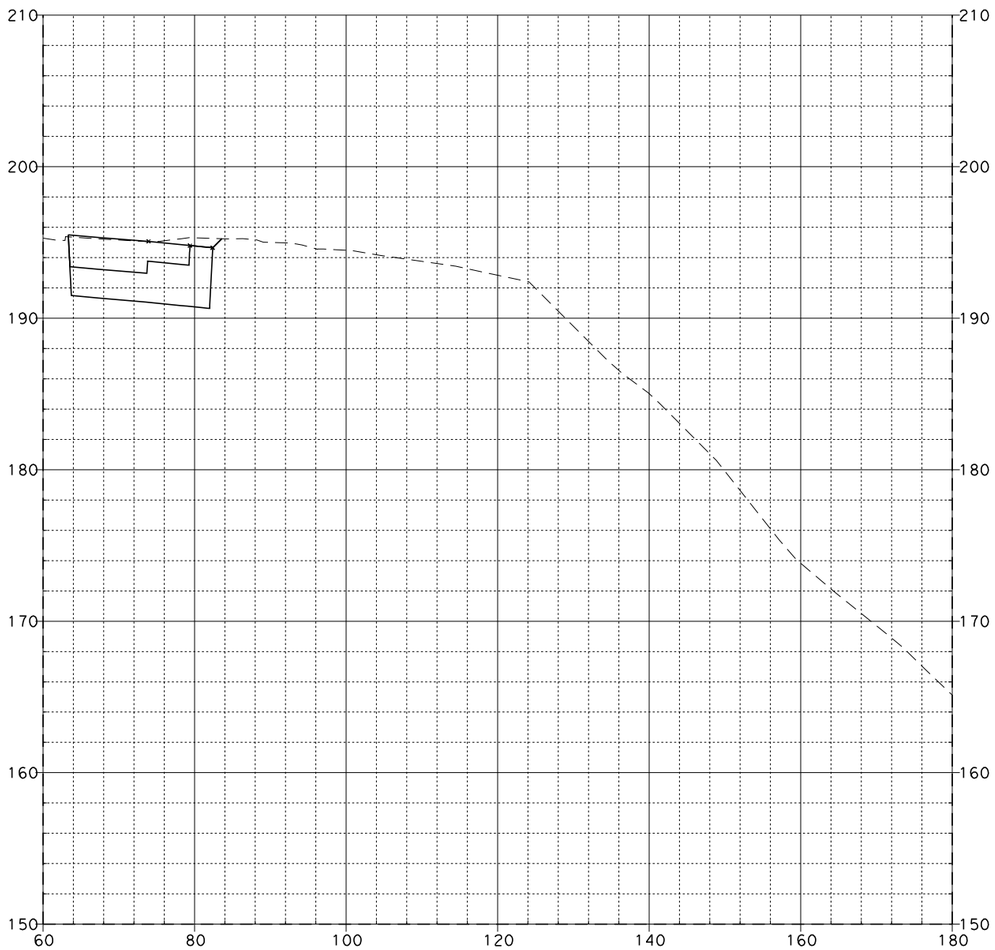

258+39.64

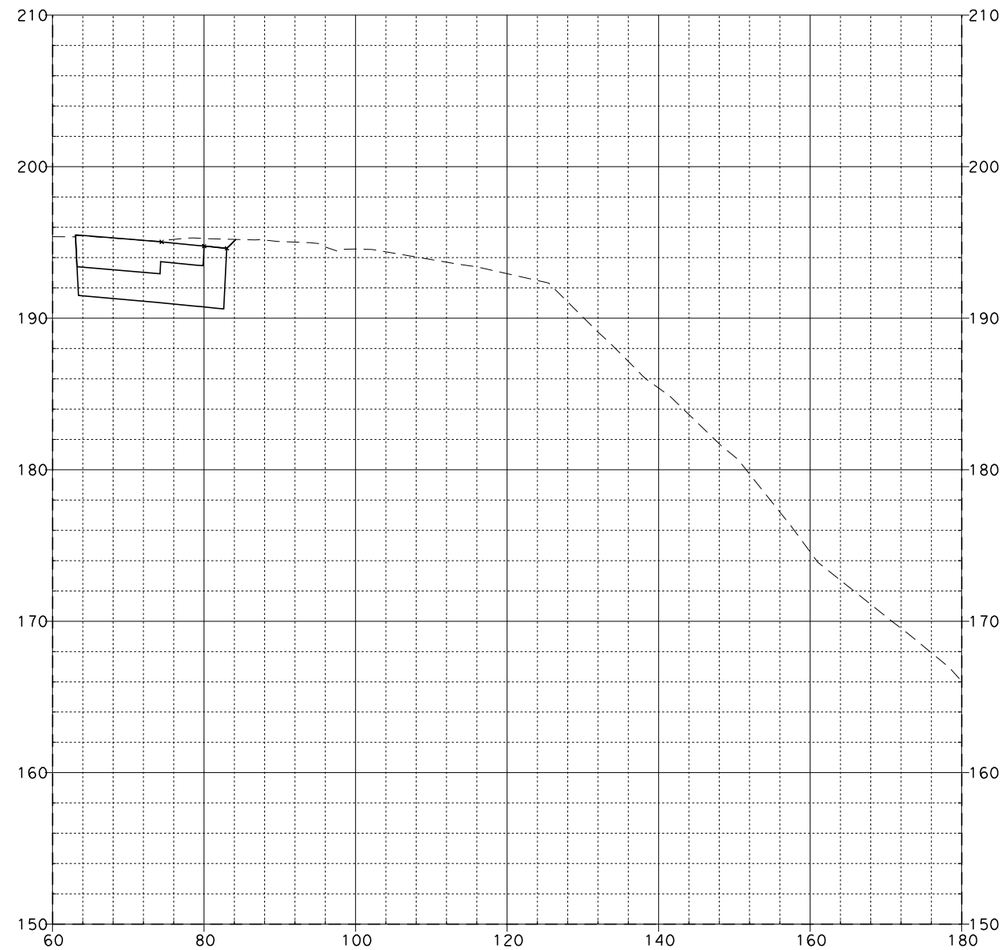

258+50.00

SR-57 MAINLINE

08\03\11

Dist	COUNTY	ROUTE	POST MILES TOTAL PROJECT	SHEET No.	TOTAL SHEETS
12	Ora	57	12.2/15.2		

FOR EARTHWORK DEVELOPMENT ONLY

...\d0282599\Cross_Sections.dgn

EA 0F0401

SCALE: Horiz 1"=20'
Vert 1"=10'

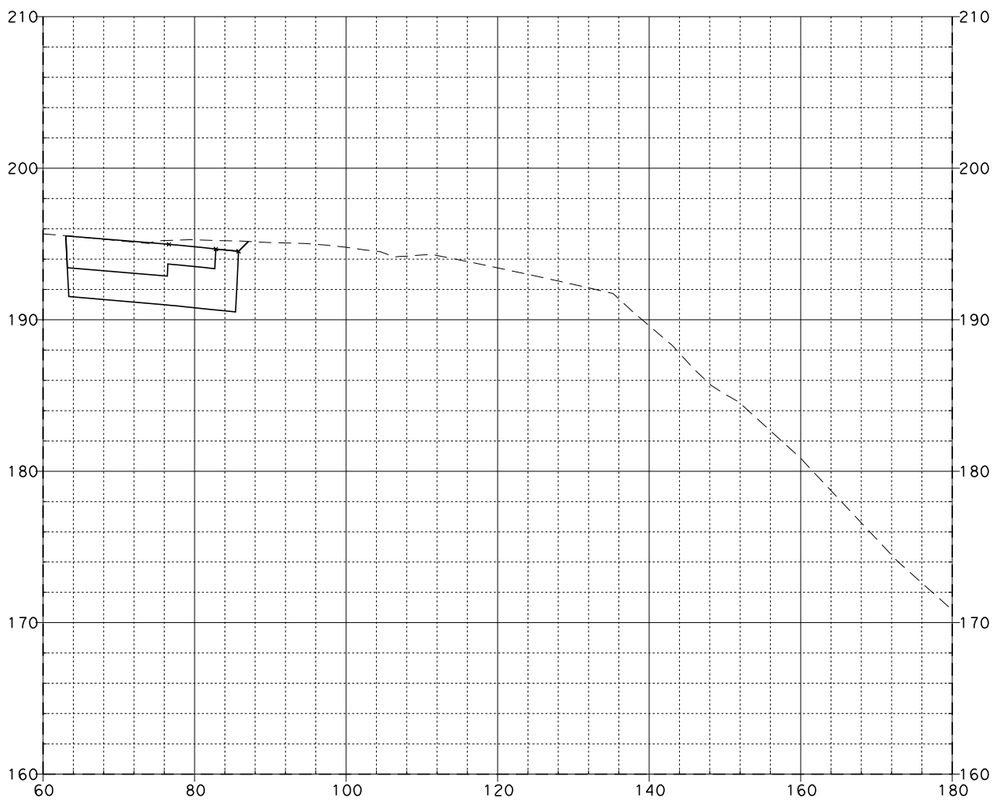

259+00.00

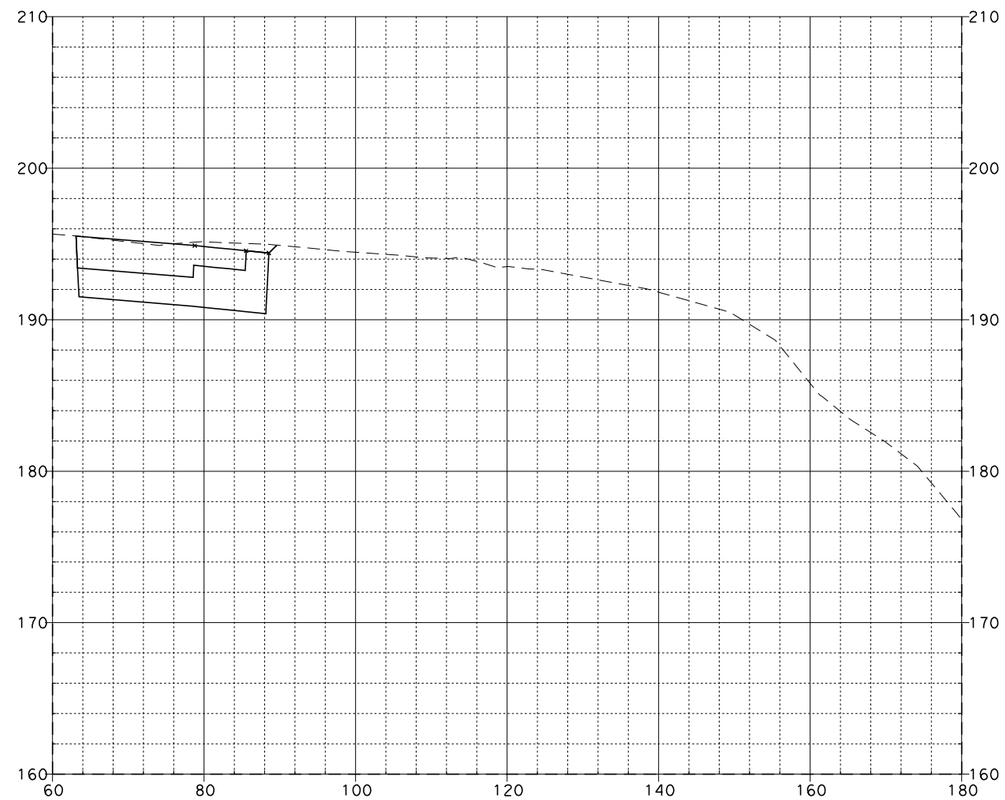

259+50.00

SR-57 MAINLINE

08\03\11

Dist	COUNTY	ROUTE	POST MILES TOTAL PROJECT	SHEET No.	TOTAL SHEETS
12	Ora	57	12.2/15.2		

FOR EARTHWORK DEVELOPMENT ONLY

...\d0282599\Cross_Sections.dgn

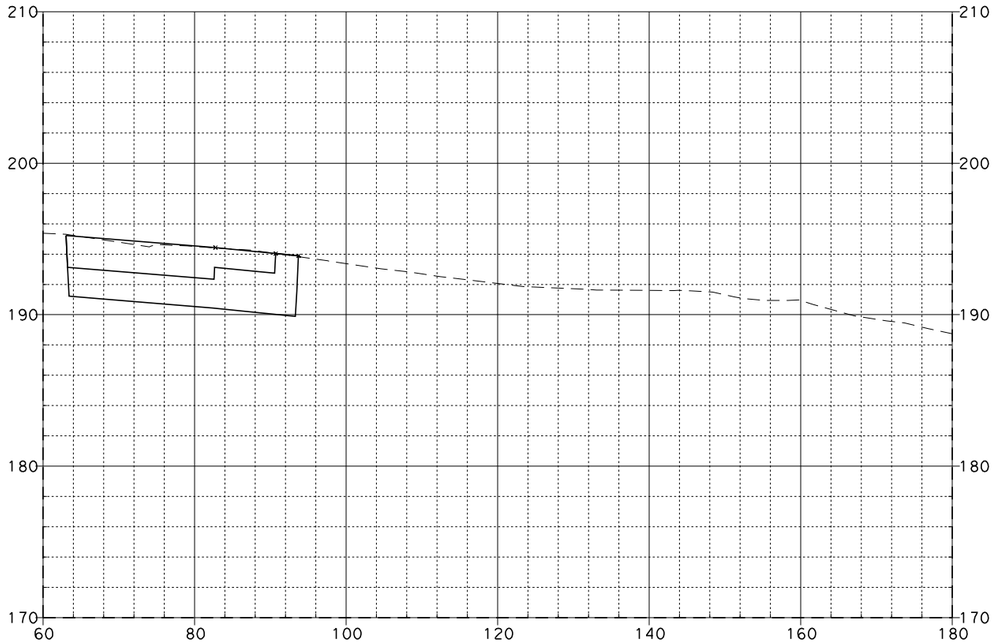

260+50.00

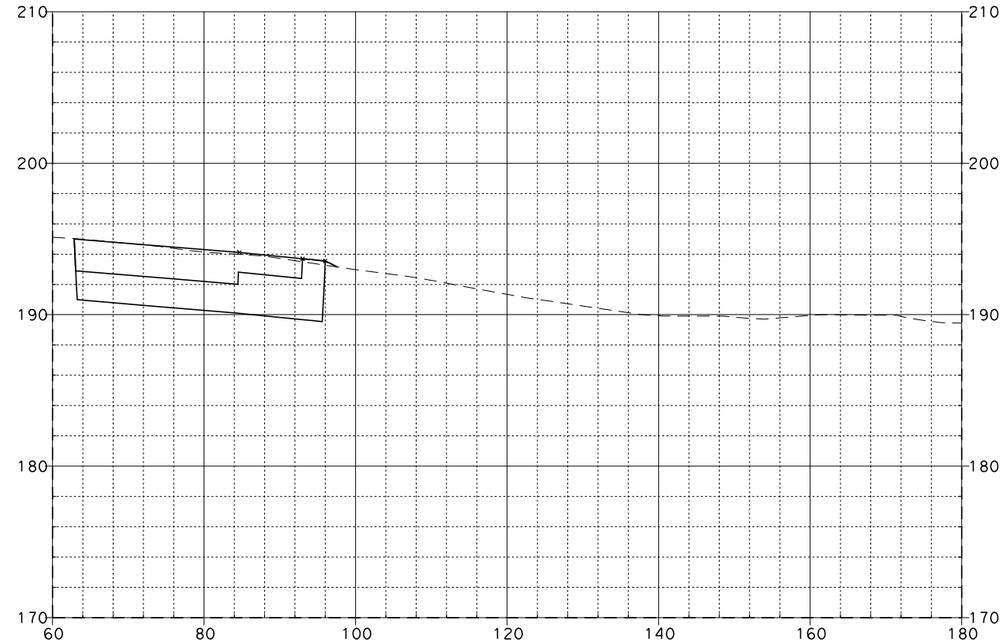

261+00.00

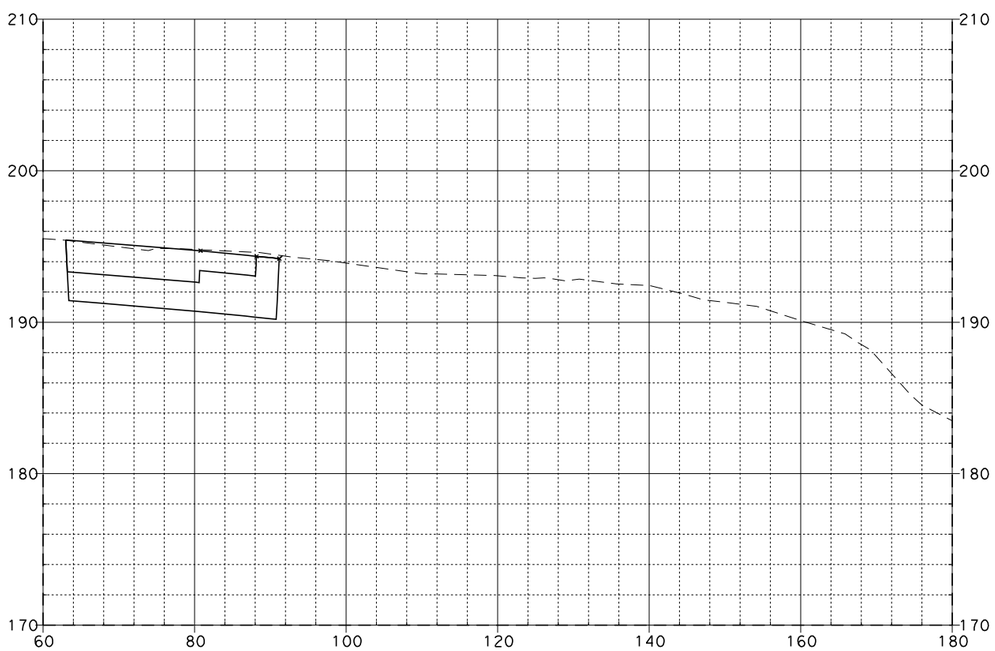

260+00.00

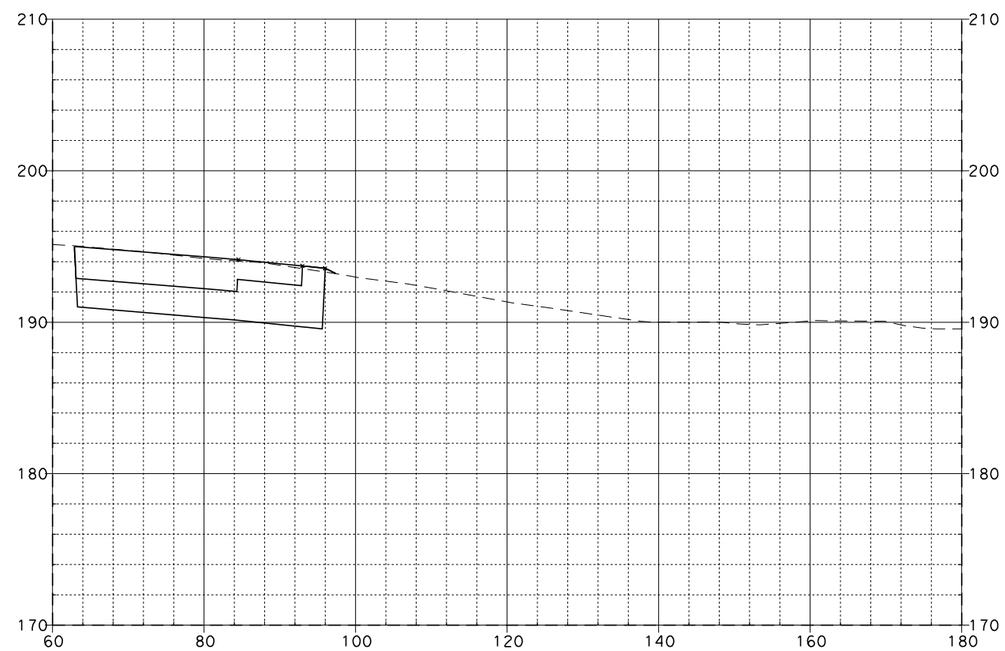

260+96.83

SR-57 MAINLINE

EA 0F0401

SCALE: Horiz 1"=20'
Vert 1"=10'

08\03\11

Dist	COUNTY	ROUTE	POST MILES TOTAL PROJECT	SHEET No.	TOTAL SHEETS
12	Ora	57	12.2/15.2		

FOR EARTHWORK DEVELOPMENT ONLY

...\d0282599\Cross_Sections.dgn

EA 0F0401

SCALE: Horiz 1"=20'
Vert 1"=10'

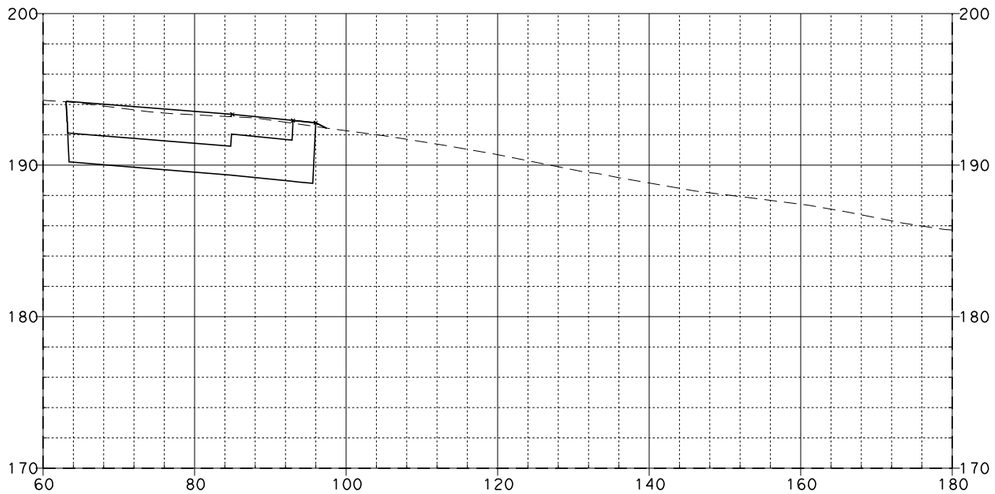

262+00.00

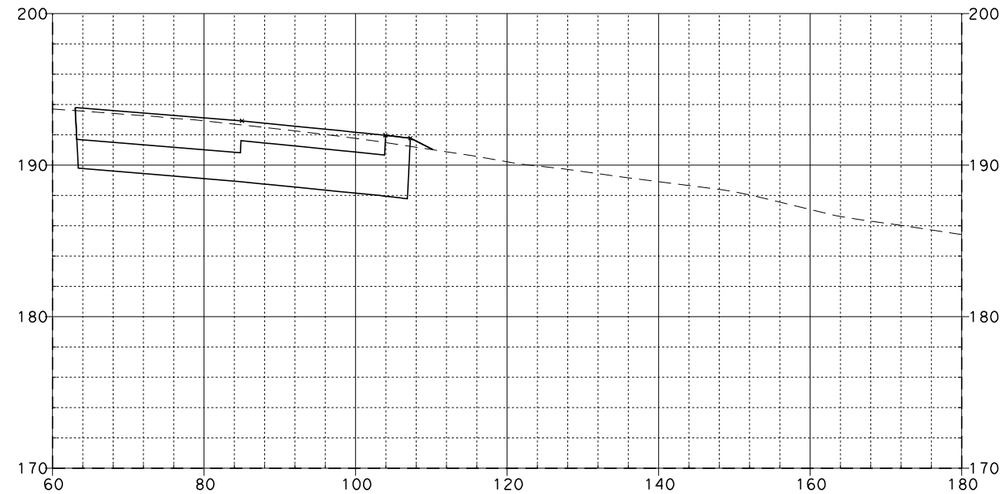

262+50.00

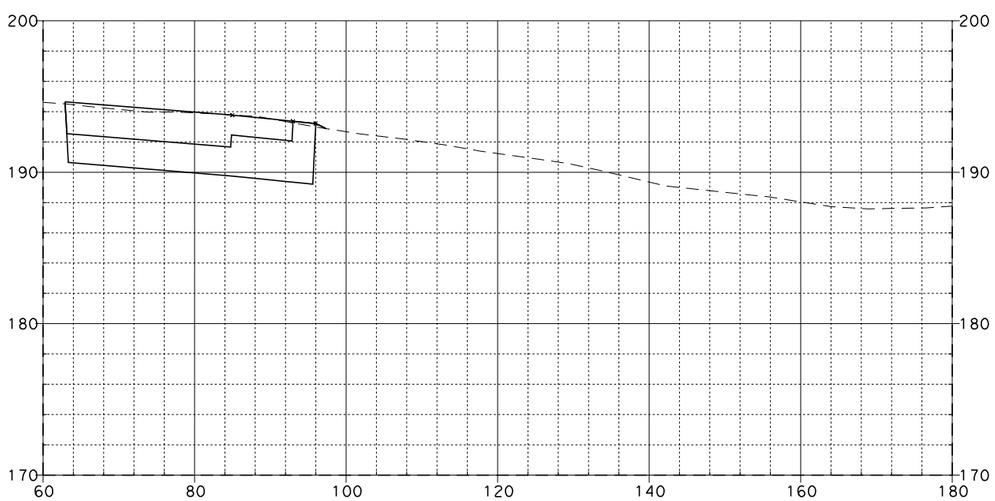

261+50.00

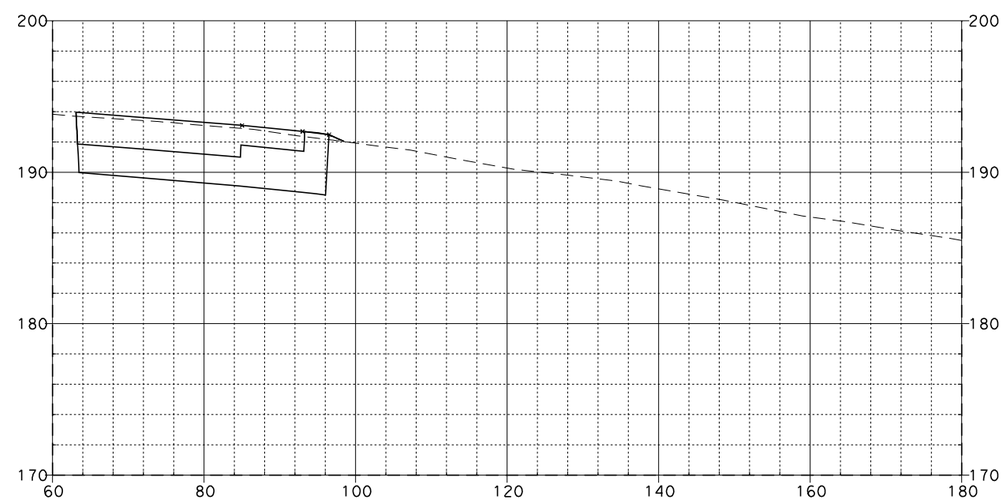

262+31.05

SR-57 MAINLINE

08\03\11

Dist	COUNTY	ROUTE	POST MILES TOTAL PROJECT	SHEET NO.	TOTAL SHEETS
12	Ora	57	12.2/15.2		

FOR EARTHWORK DEVELOPMENT ONLY

...\d0282599\Cross_Sections.dgn

EA 0F0401

SCALE: Horiz 1"=20'
Vert 1"=10'

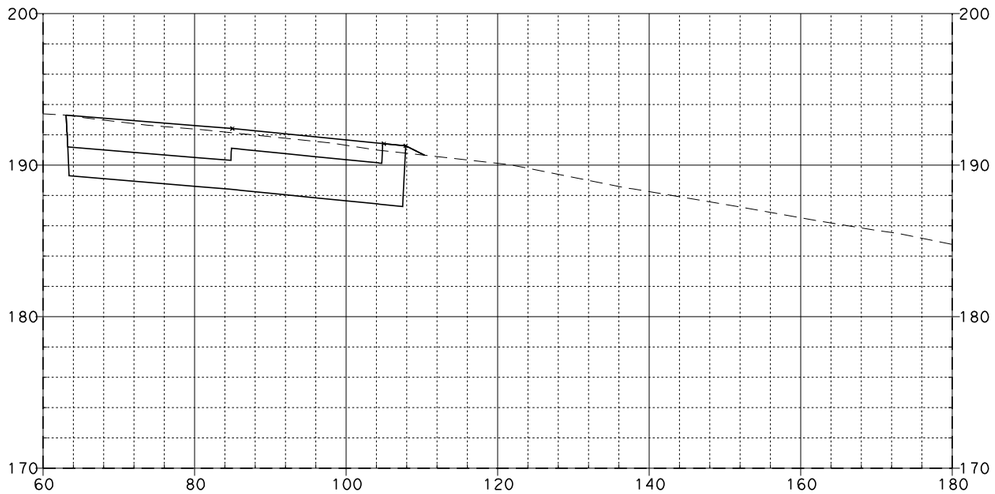

262+98.58

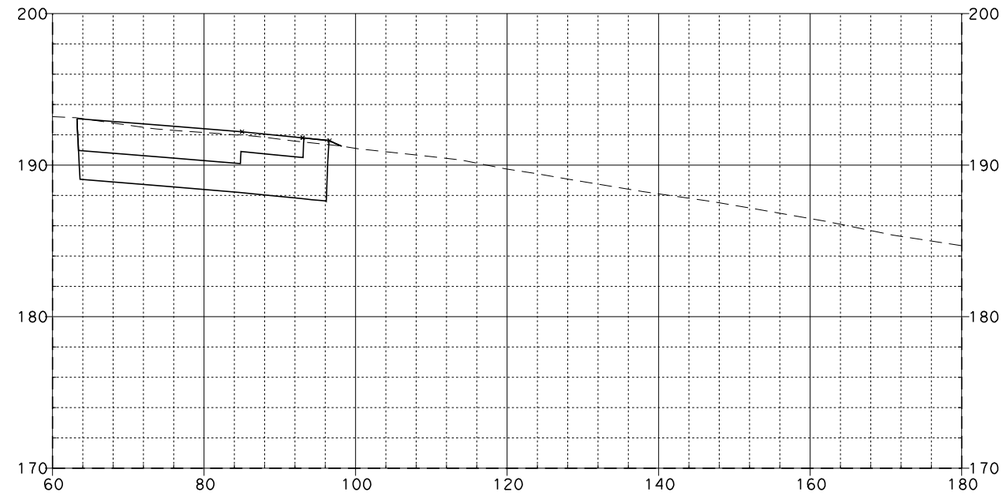

263+19.36

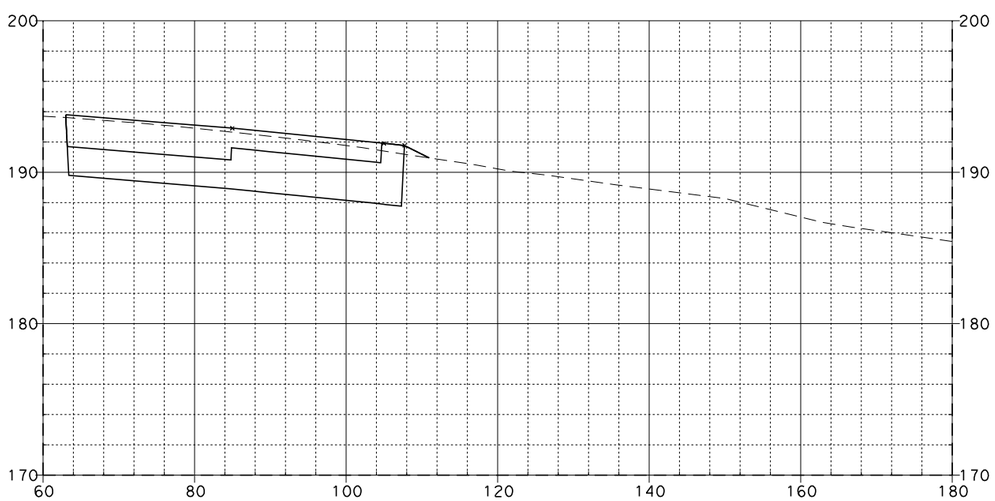

262+51.83

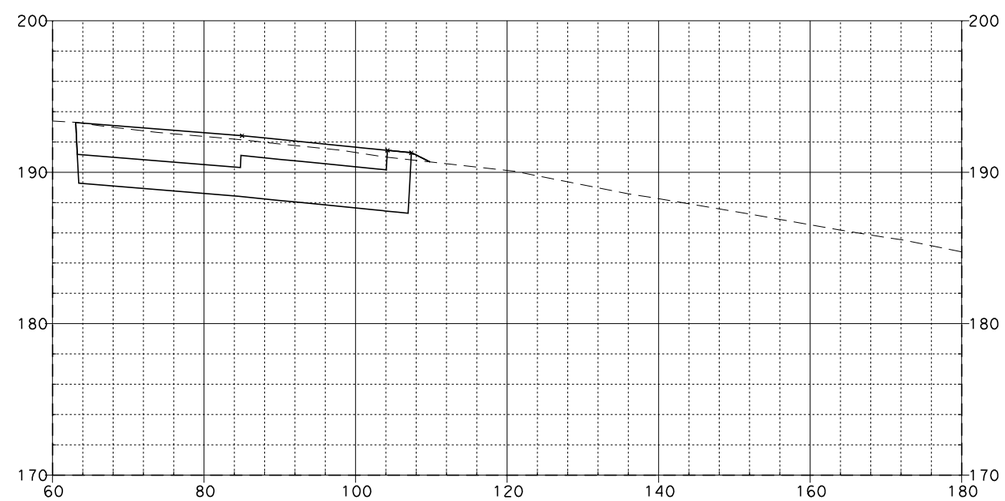

263+00.00

SR-57 MAINLINE

08\03\11

Dist	COUNTY	ROUTE	POST MILES TOTAL PROJECT	SHEET NO.	TOTAL SHEETS
12	Ora	57	12.2/15.2		

FOR EARTHWORK DEVELOPMENT ONLY

...\d0282599\Cross_Sections.dgn

EA 0F0401

SCALE: Horiz 1"=20'
Vert 1"=10'

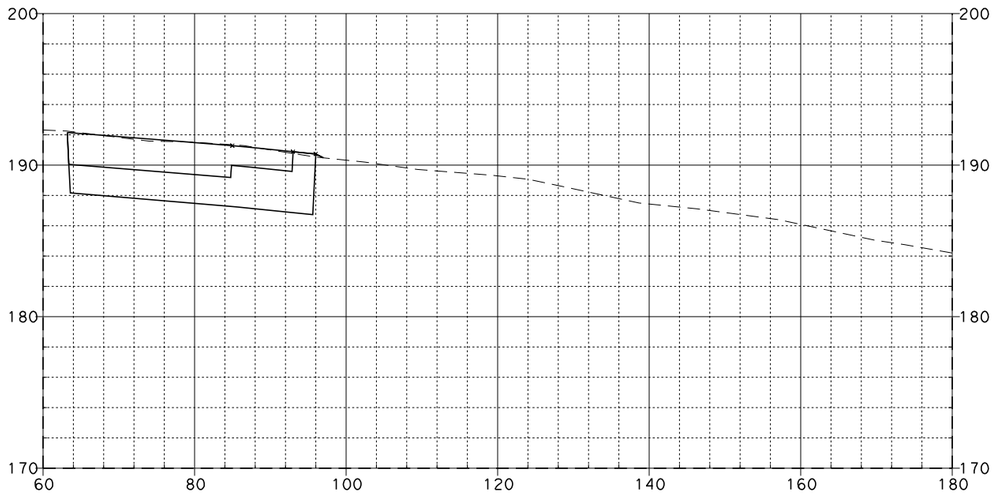

264+00.00

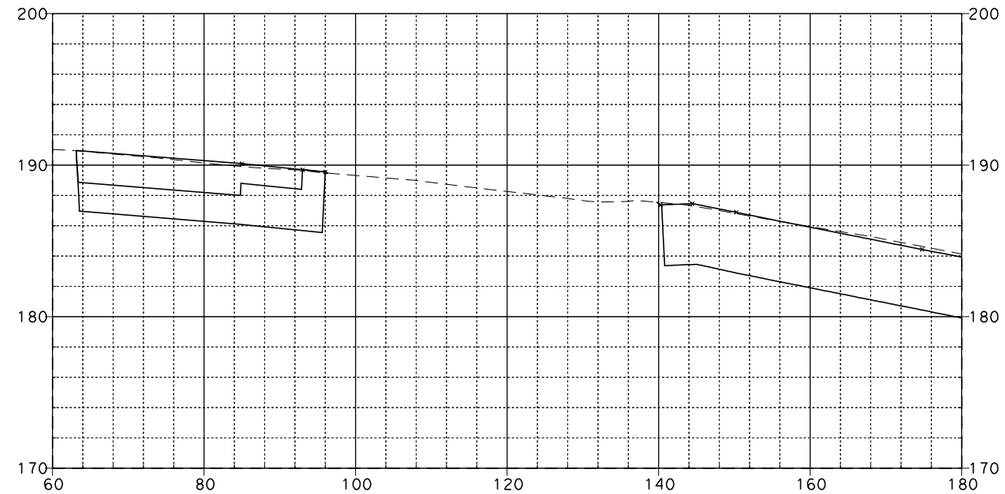

265+00.00

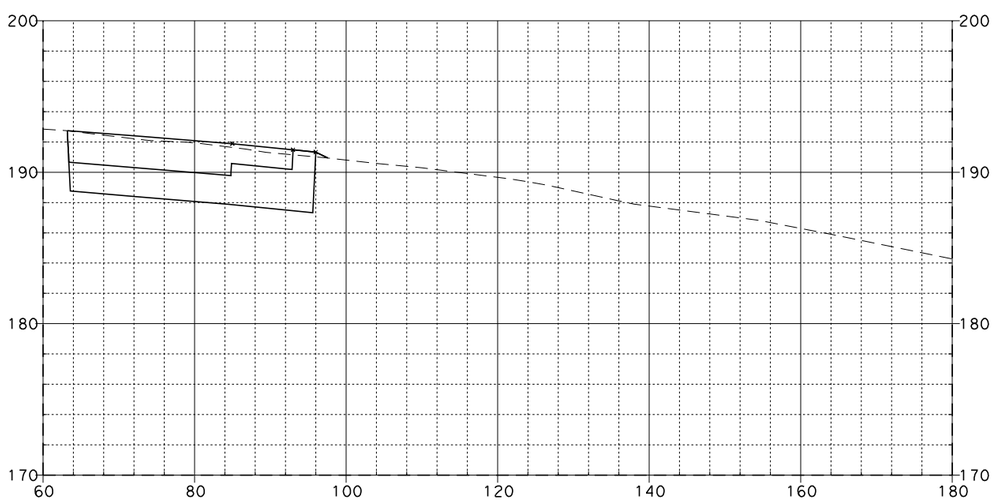

263+50.00

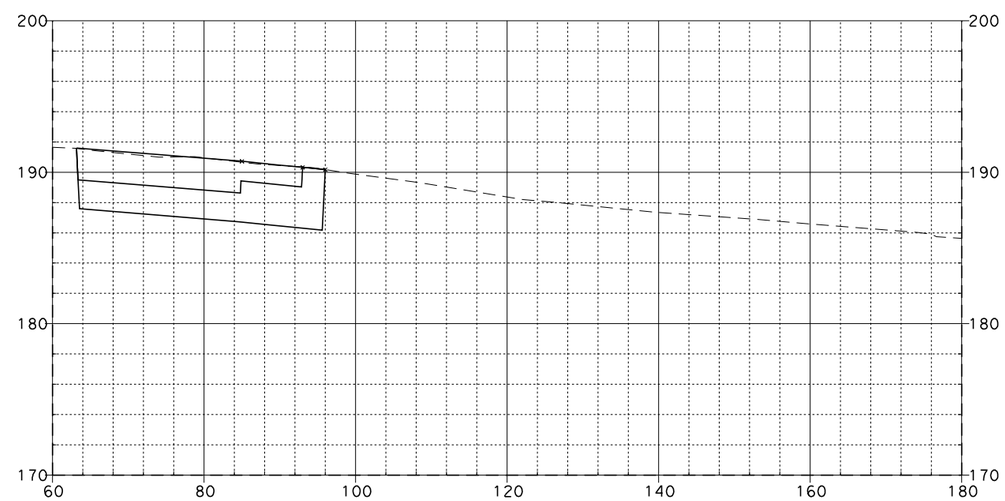

264+50.00

SR-57 MAINLINE

08\03\11

Dist	COUNTY	ROUTE	POST MILES TOTAL PROJECT	SHEET NO.	TOTAL SHEETS
12	Ora	57	12.2/15.2		

FOR EARTHWORK DEVELOPMENT ONLY

...\d0282599\Cross_Sections.dgn

EA 0F0401

SCALE: Horiz 1"=20'
Vert 1"=10'

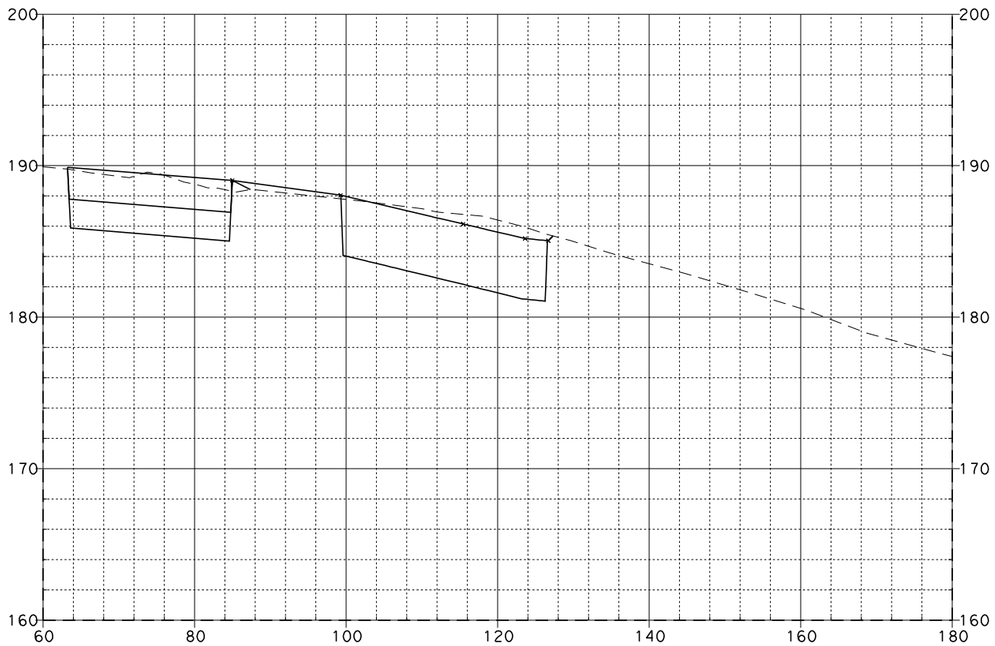

266+00.00

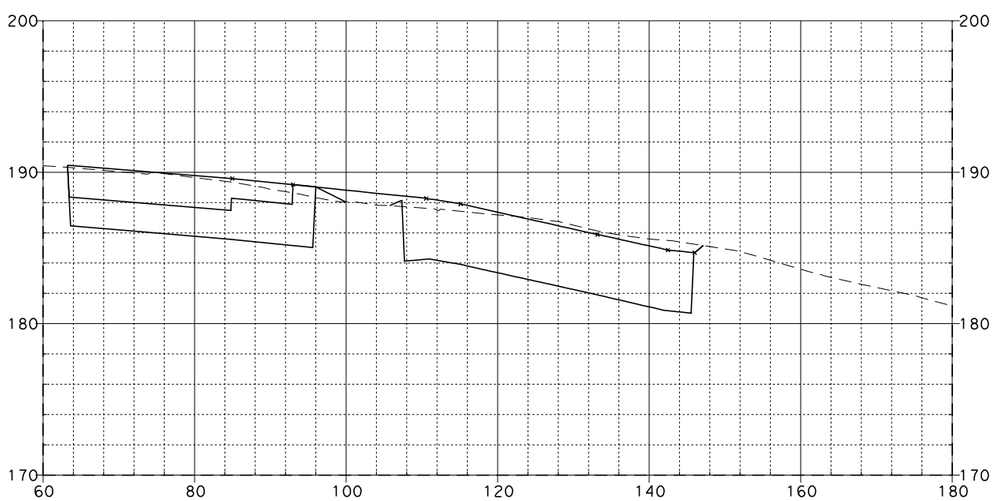

265+50.00

SR-57 MAINLINE

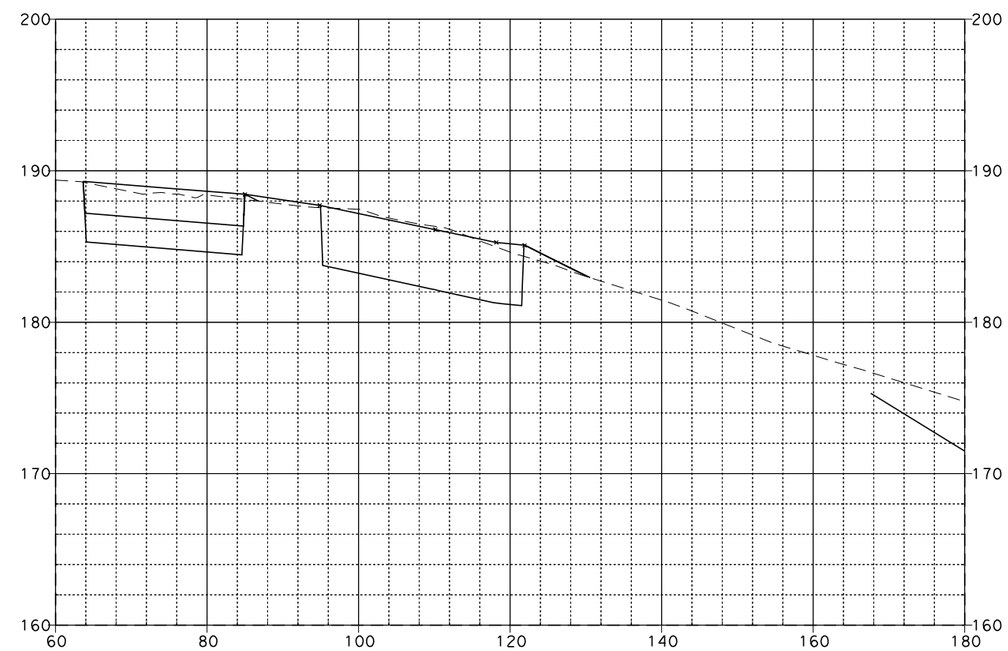

266+50.00

08\03\11

Dist	COUNTY	ROUTE	POST MILES TOTAL PROJECT	SHEET No.	TOTAL SHEETS
12	Ora	57	12.2/15.2		

FOR EARTHWORK DEVELOPMENT ONLY

...\d0282599\Cross_Sections.dgn

EA 0F0401

SCALE: Horiz 1"=20'
Vert 1"=10'

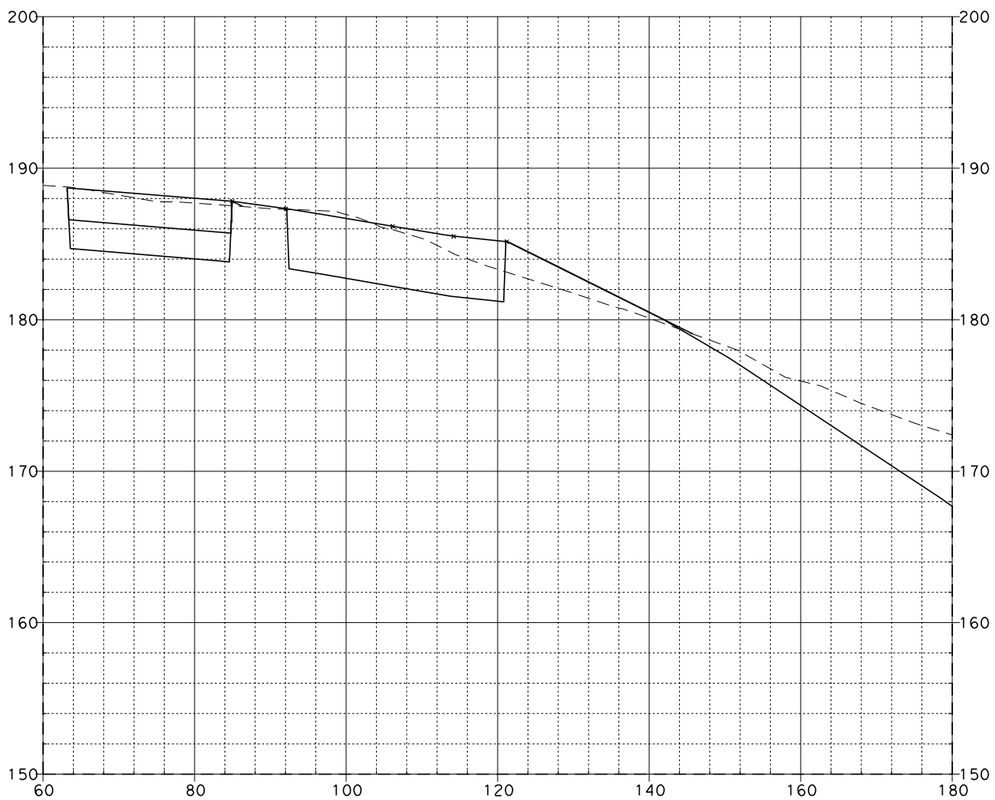

267+00.00

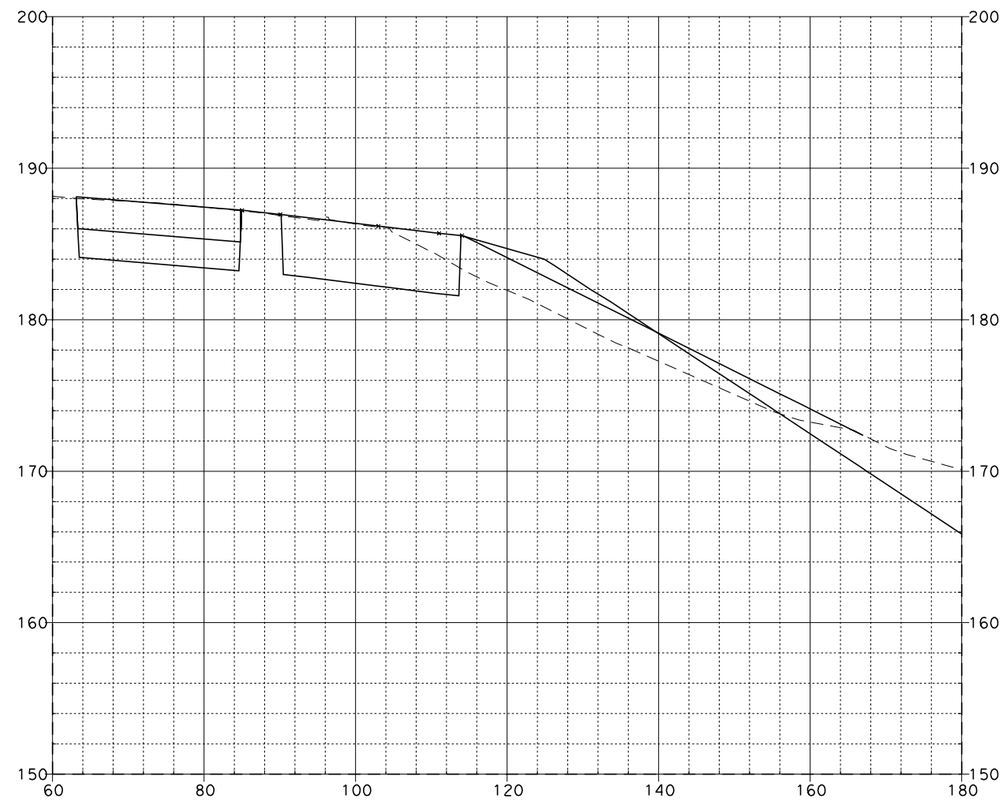

267+50.00

SR-57 MAINLINE

08\03\11

Dist	COUNTY	ROUTE	POST MILES TOTAL PROJECT	SHEET No.	TOTAL SHEETS
12	Ora	57	12.2/15.2		

FOR EARTHWORK DEVELOPMENT ONLY

...\d0282599\Cross_Sections.dgn

EA 0F0401

SCALE: Horiz 1"=20'
Vert 1"=10'

267+61.64

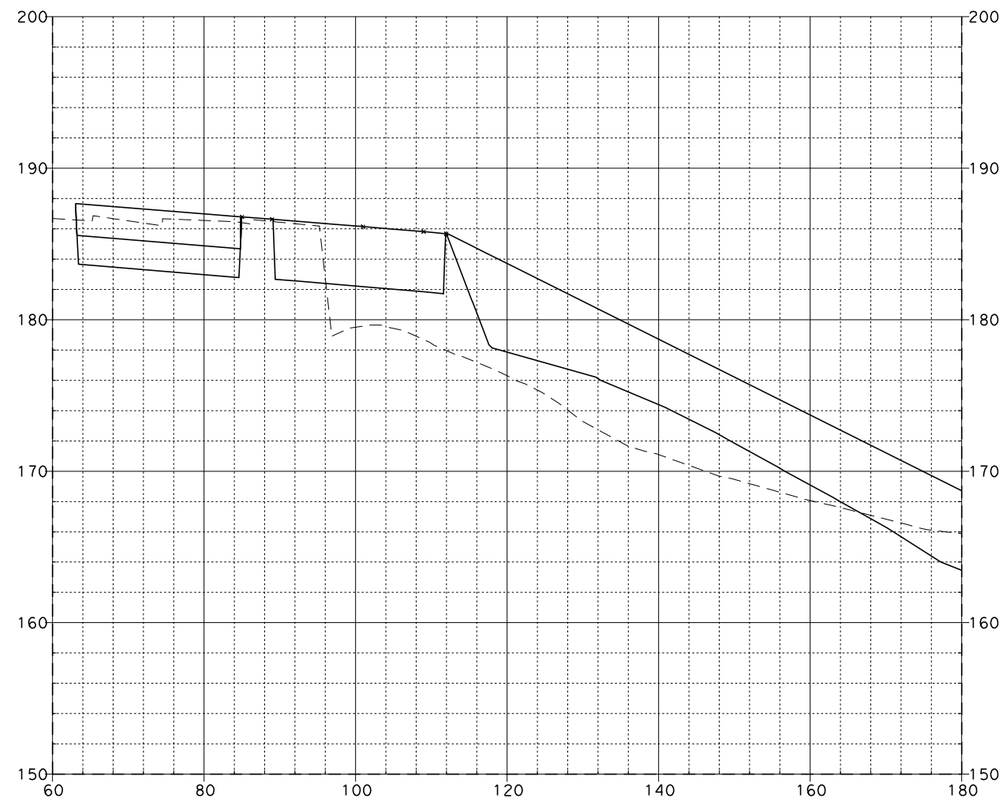

267+92.12

SR-57 MAINLINE

08\03\11

Dist	COUNTY	ROUTE	POST MILES TOTAL PROJECT	SHEET No.	TOTAL SHEETS
12	Ora	57	12.2/15.2		

FOR EARTHWORK DEVELOPMENT ONLY

...\d0282599\Cross_Sections.dgn

EA 0F0401

SCALE: Horiz 1"=20'
Vert 1"=10'

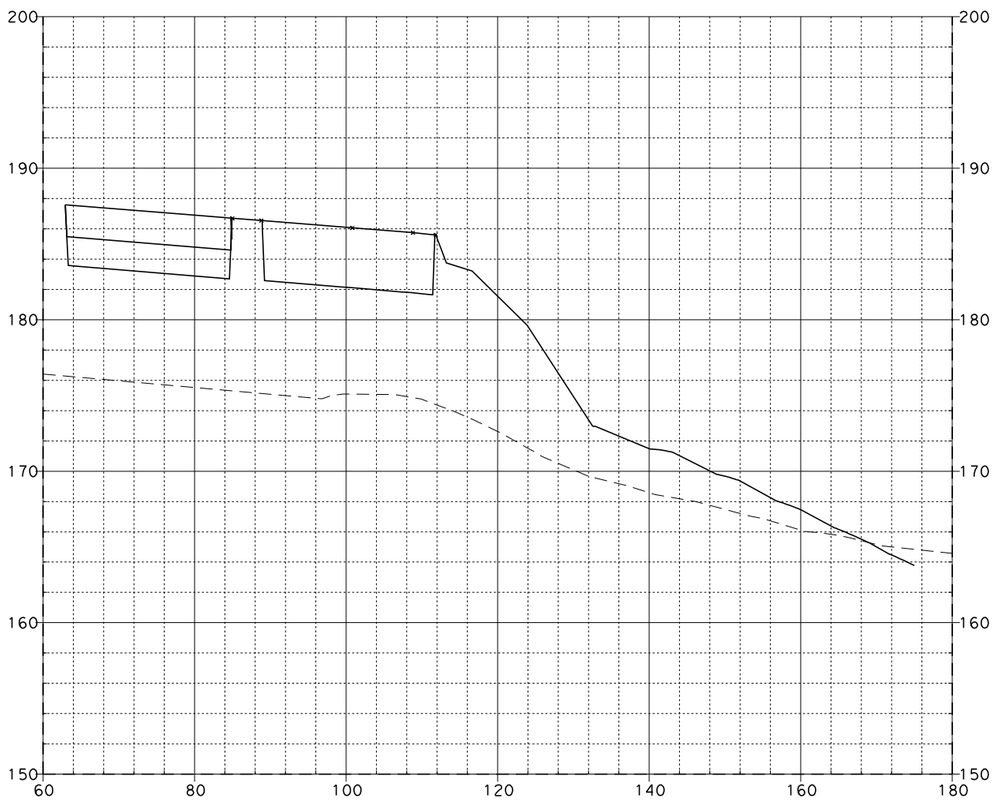

268+00.00

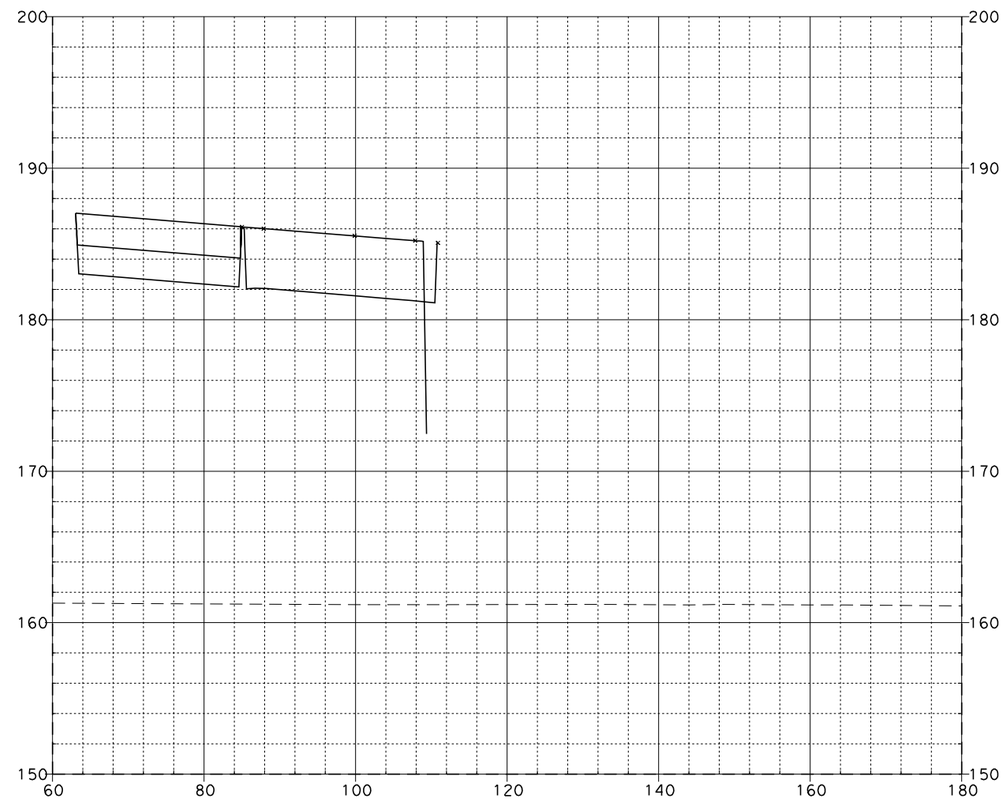

268+50.00

SR-57 MAINLINE

08\03\11

Dist	COUNTY	ROUTE	POST MILES TOTAL PROJECT	SHEET No.	TOTAL SHEETS
12	Ora	57	12.2/15.2		

FOR EARTHWORK DEVELOPMENT ONLY

...\d0282599\Cross_Sections.dgn

EA 0F0401

SCALE: Horiz 1"=20'
Vert 1"=10'

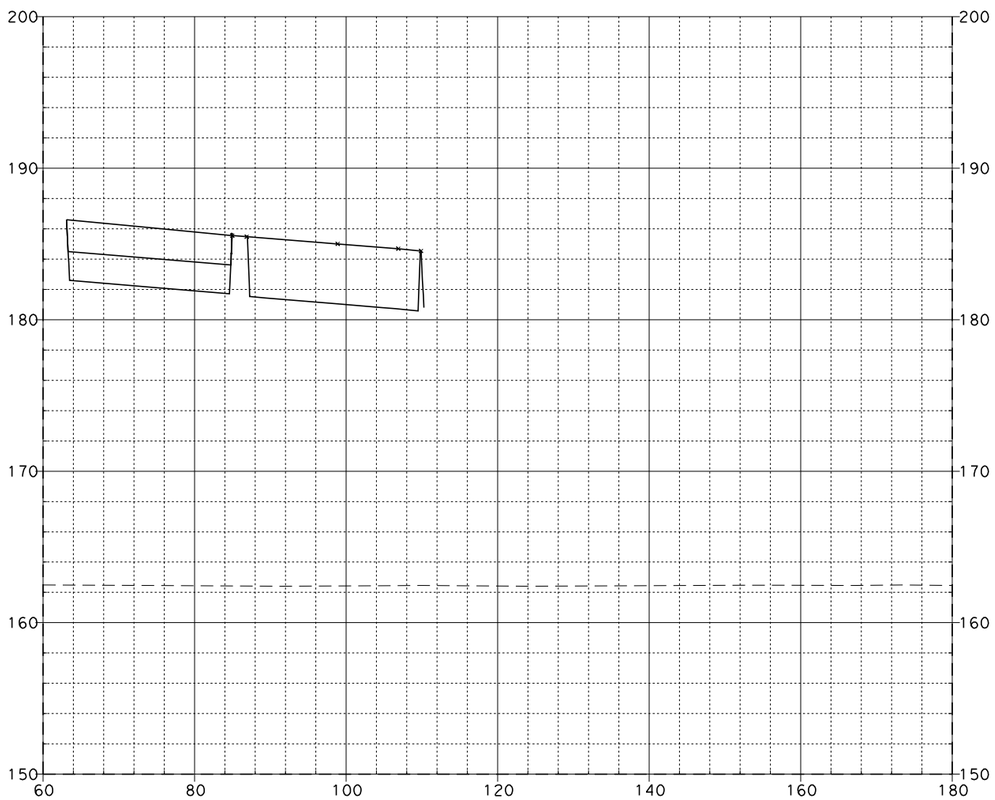

269+00.00

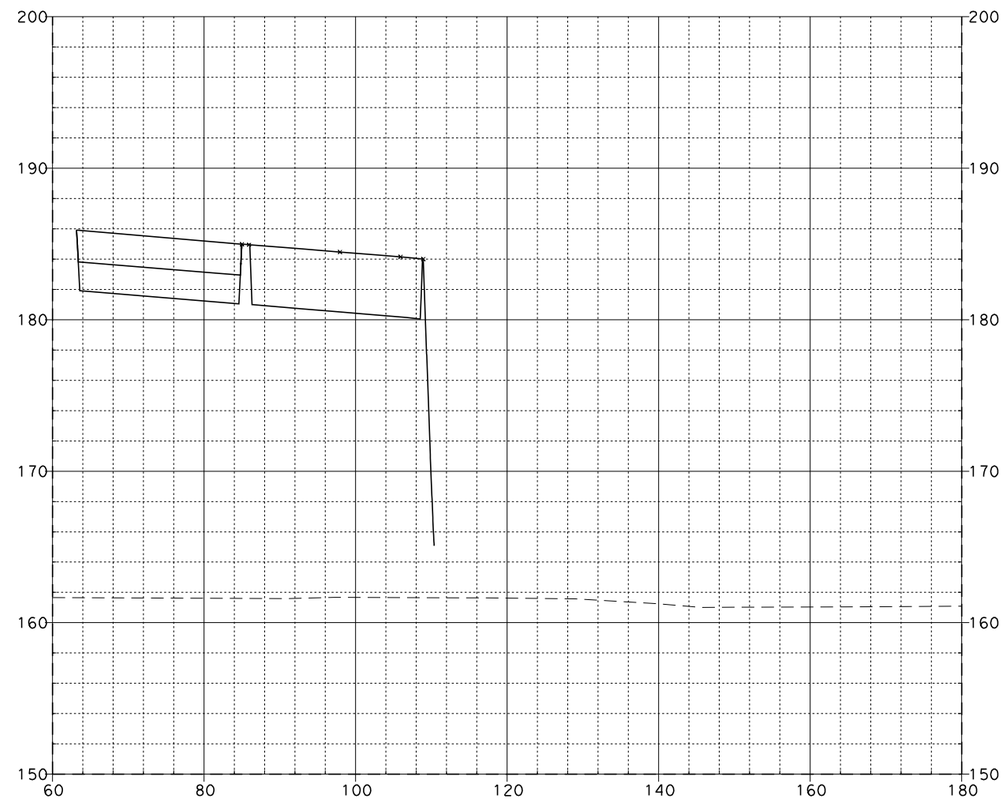

269+50.00

SR-57 MAINLINE

08\03\11

Dist	COUNTY	ROUTE	POST MILES TOTAL PROJECT	SHEET No.	TOTAL SHEETS
12	Ora	57	12.2/15.2		

FOR EARTHWORK DEVELOPMENT ONLY

...\d0282599\Cross_Sections.dgn

EA 0F0401

SCALE: Horiz 1"=20'
Vert 1"=10'

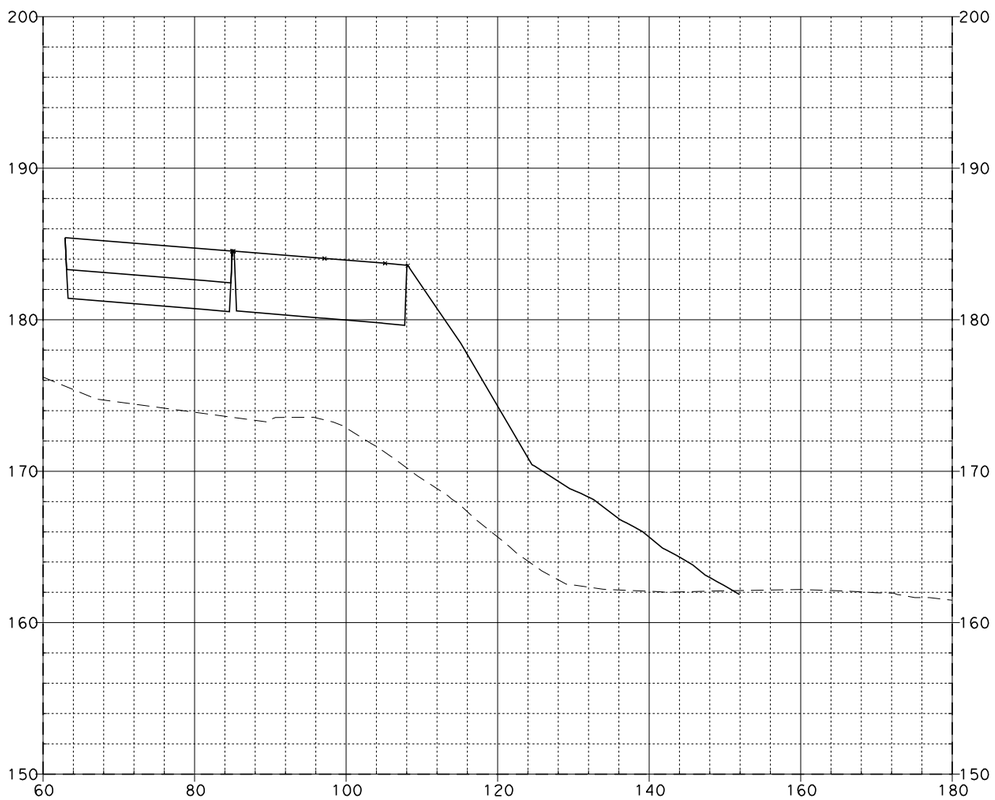

269+89.90

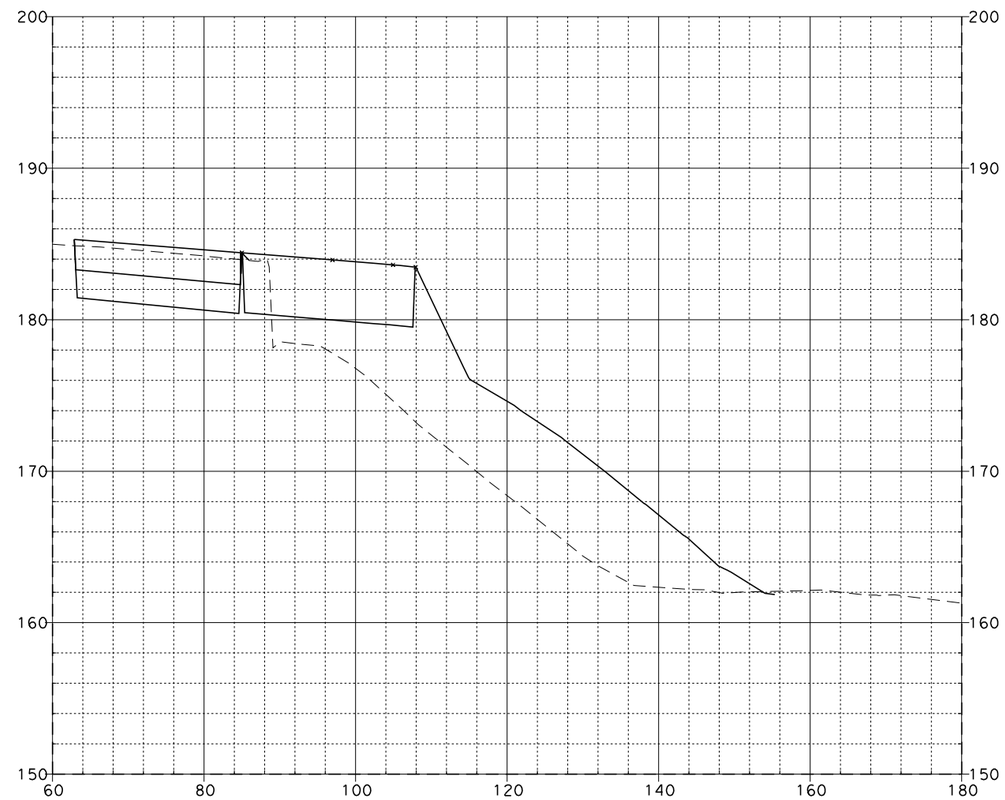

270+00.00

SR-57 MAINLINE

08\03\11

Dist	COUNTY	ROUTE	POST MILES TOTAL PROJECT	SHEET No.	TOTAL SHEETS
12	Ora	57	12.2/15.2		

FOR EARTHWORK DEVELOPMENT ONLY

...\d0282599\Cross_Sections.dgn

EA 0F0401

SCALE: Horiz 1"=20'
Vert 1"=10'

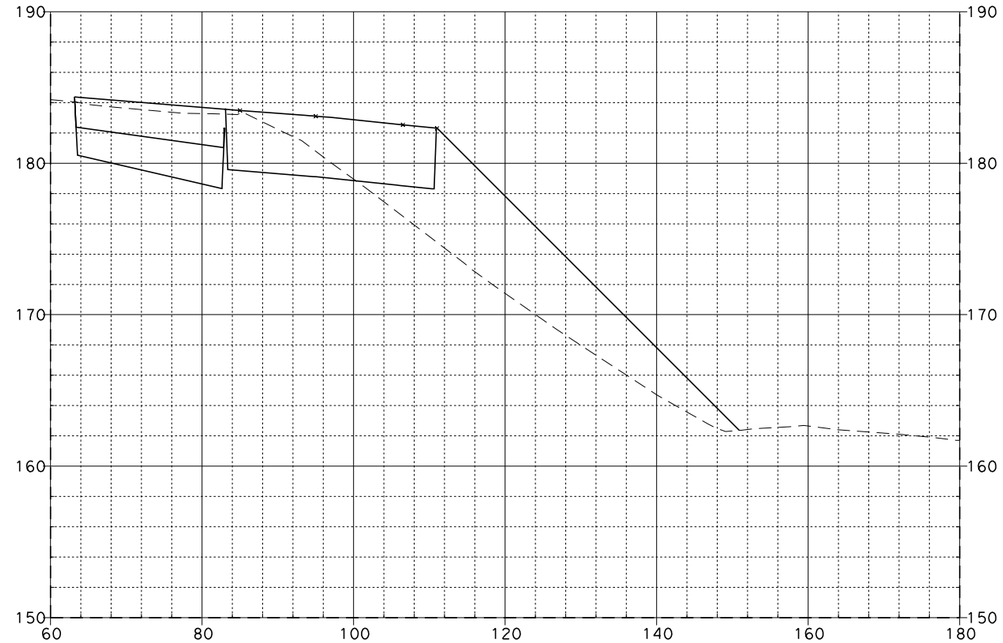

271+00.00

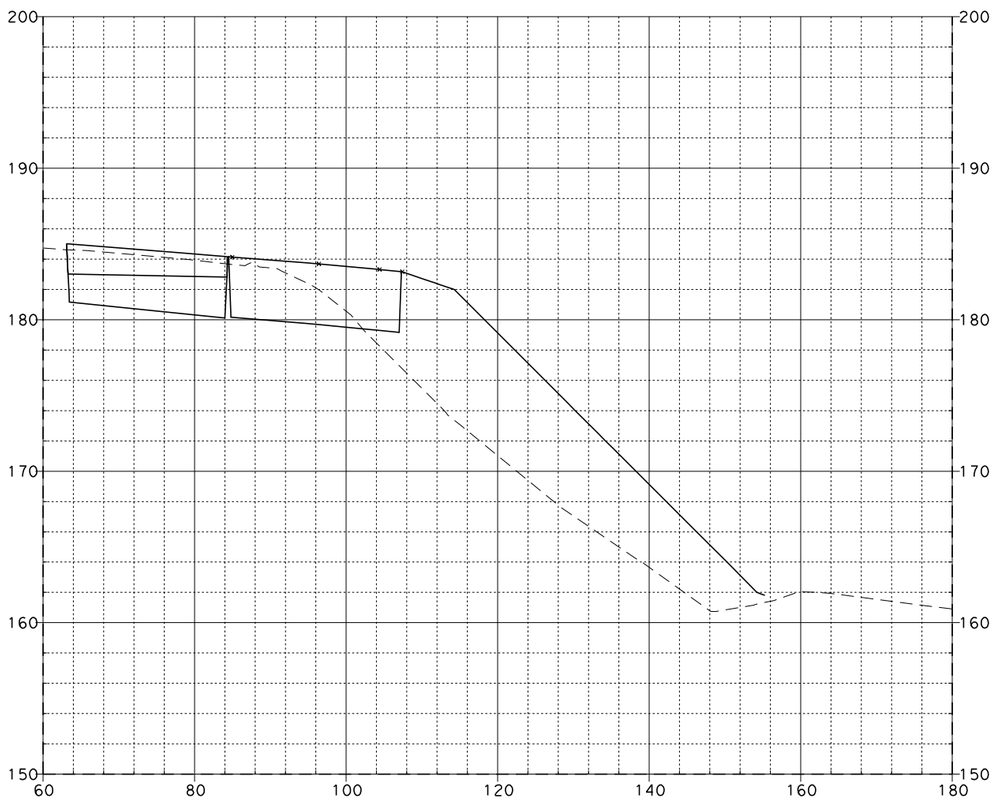

270+27.24

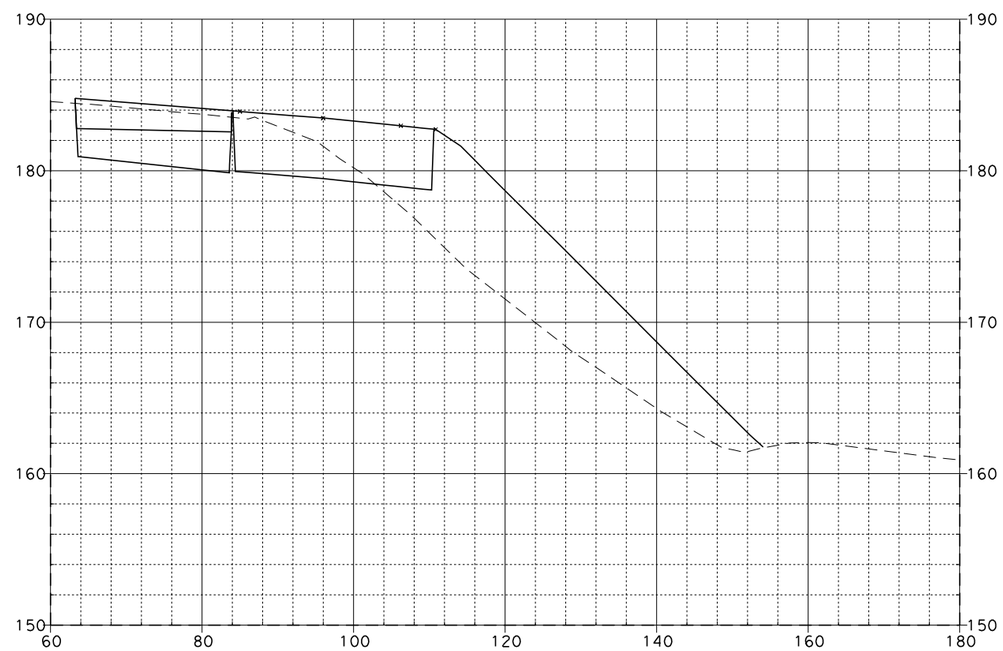

270+50.00

SR-57 MAINLINE

08\03\11

Dist	COUNTY	ROUTE	POST MILES TOTAL PROJECT	SHEET No.	TOTAL SHEETS
12	Ora	57	12.2/15.2		

FOR EARTHWORK DEVELOPMENT ONLY

...\d0282599\Cross_Sections.dgn

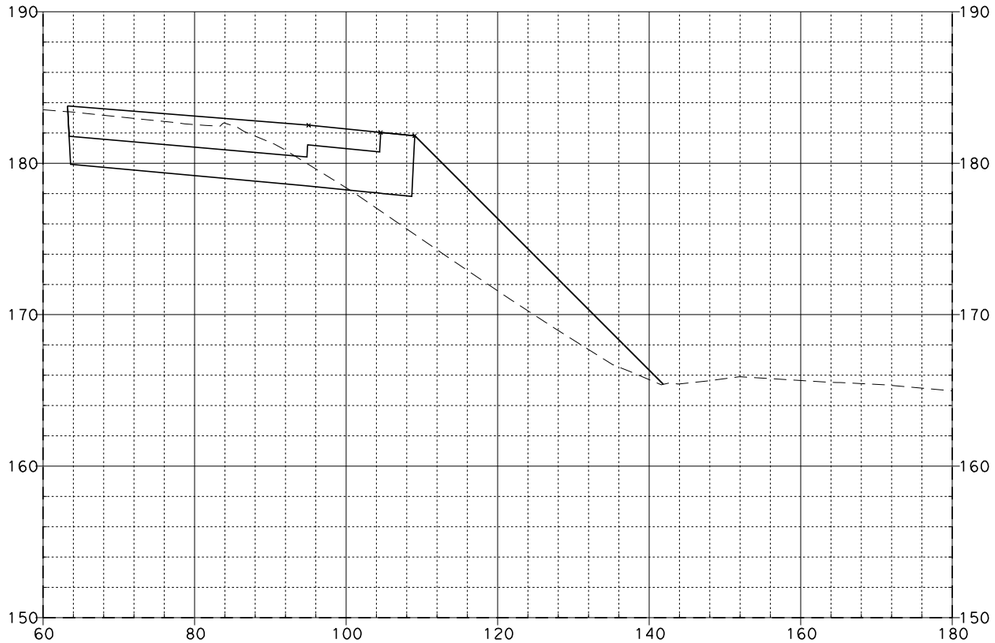

272+00.00

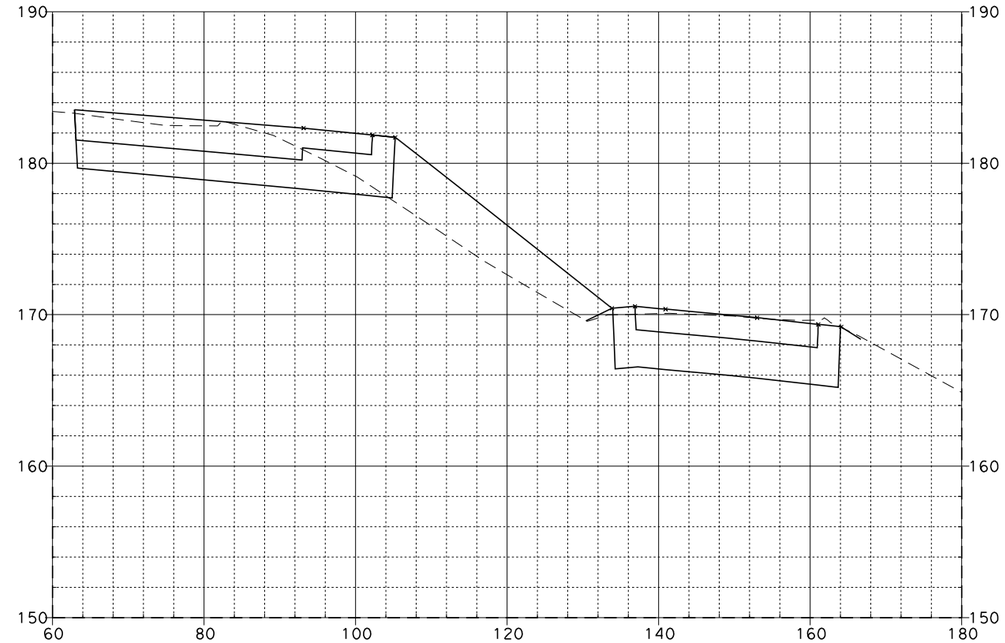

273+00.00

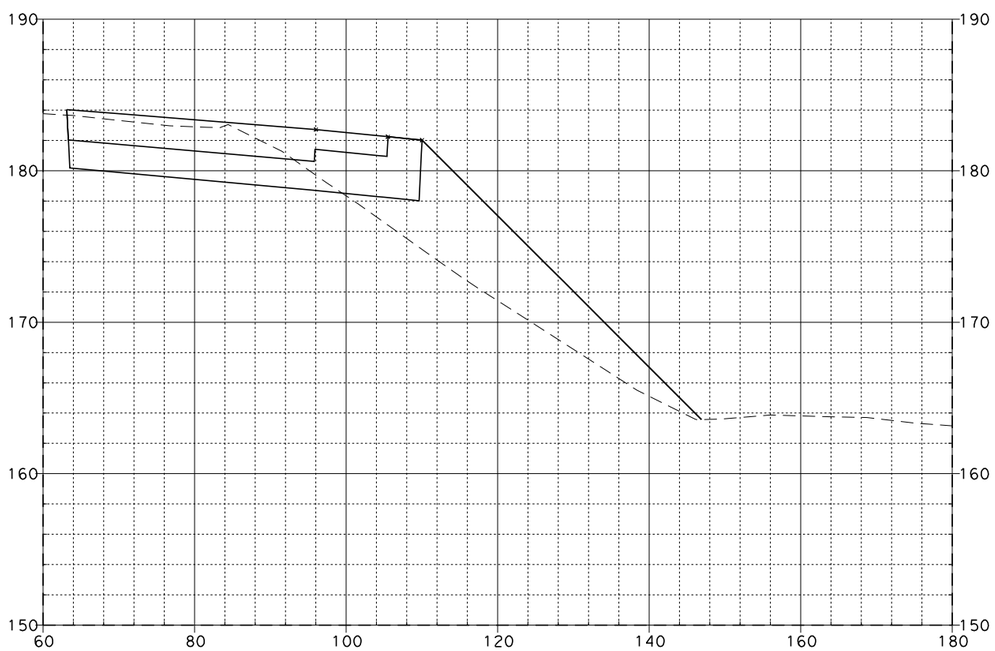

271+50.00

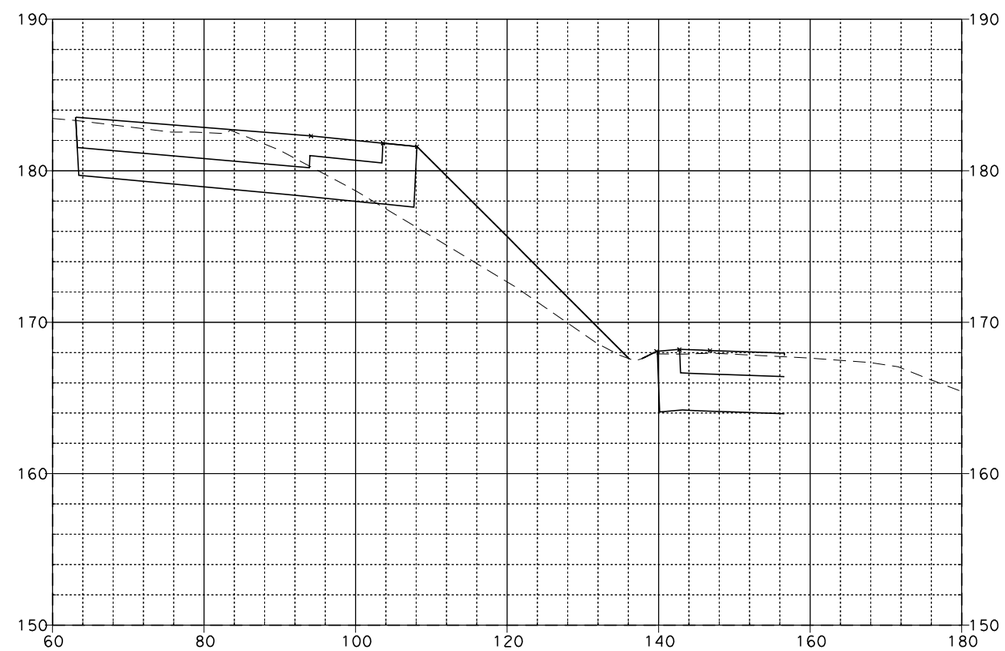

272+50.00

SR-57 MAINLINE

EA 0F0401

SCALE: Horiz 1"=20'
Vert 1"=10'

08\03\11

Dist	COUNTY	ROUTE	POST MILES TOTAL PROJECT	SHEET No.	TOTAL SHEETS
12	Ora	57	12.2/15.2		

FOR EARTHWORK DEVELOPMENT ONLY

...\d0282599\Cross_Sections.dgn

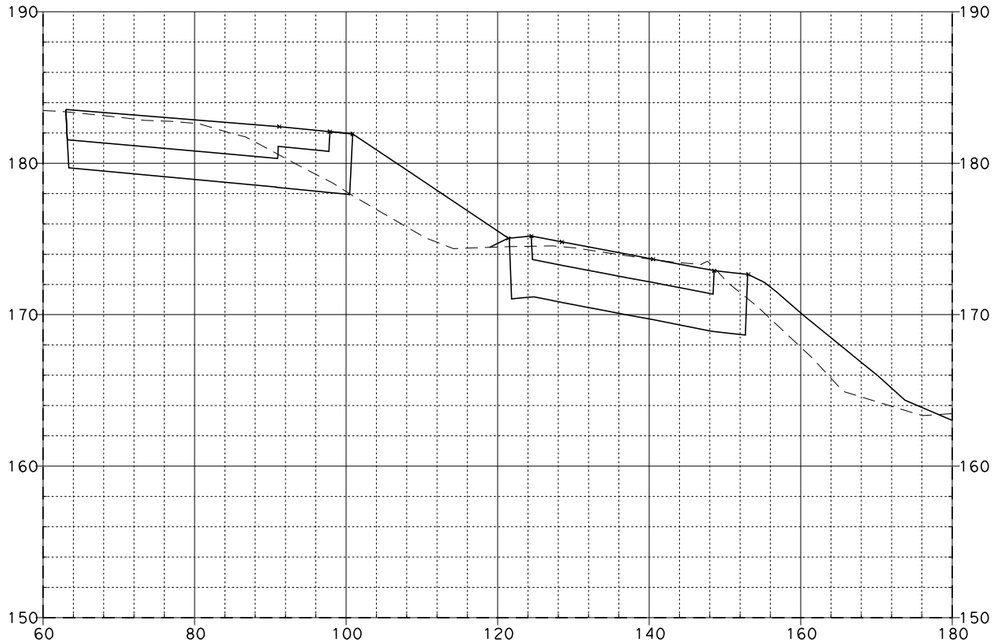

274+00.00

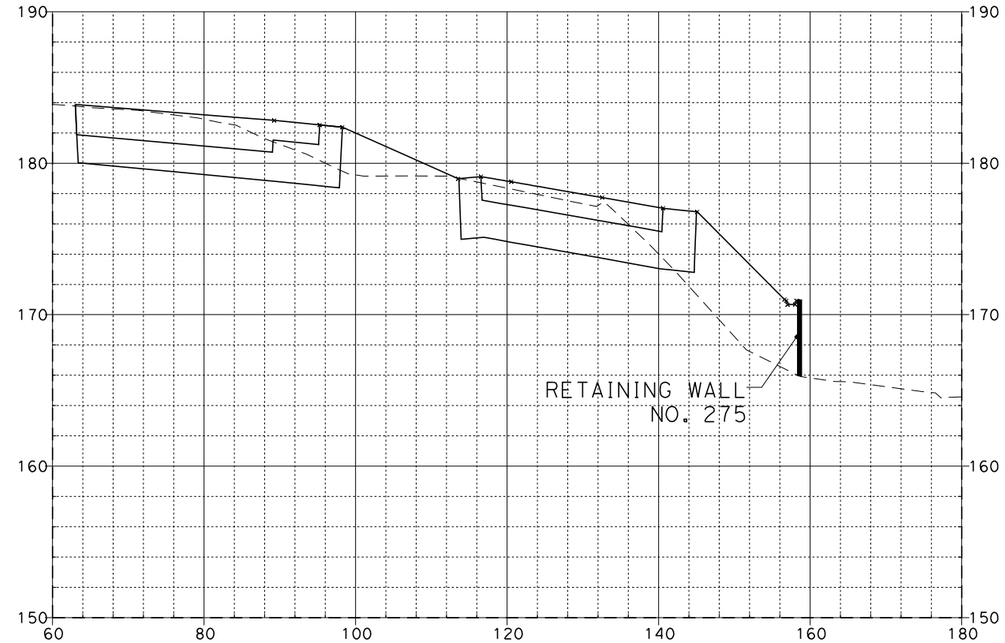

275+00.00

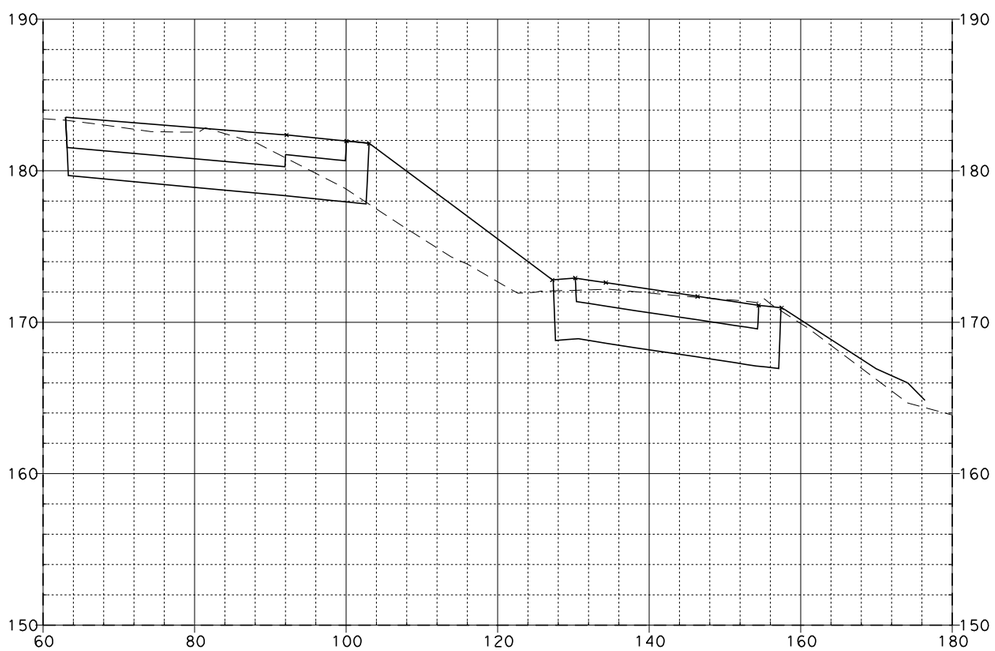

273+50.00

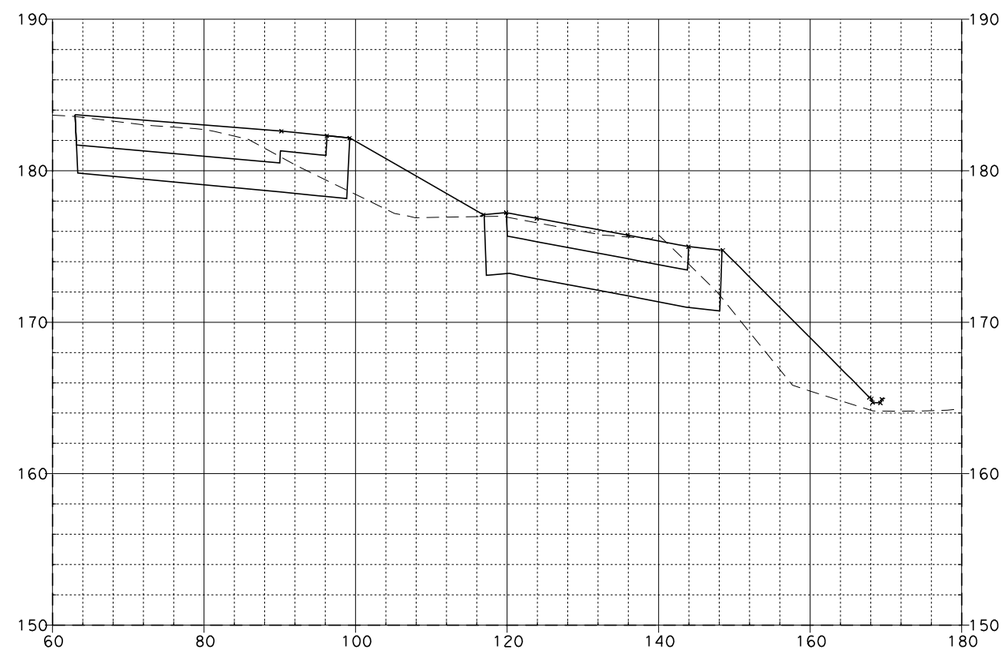

274+50.00

SR-57 MAINLINE

EA 0F0401

SCALE: Horiz 1"=20'
Vert 1"=10'

08\03\11

Dist	COUNTY	ROUTE	POST MILES TOTAL PROJECT	SHEET No.	TOTAL SHEETS
12	Ora	57	12.2/15.2		

FOR EARTHWORK DEVELOPMENT ONLY

...\d0282599\Cross_Sections.dgn

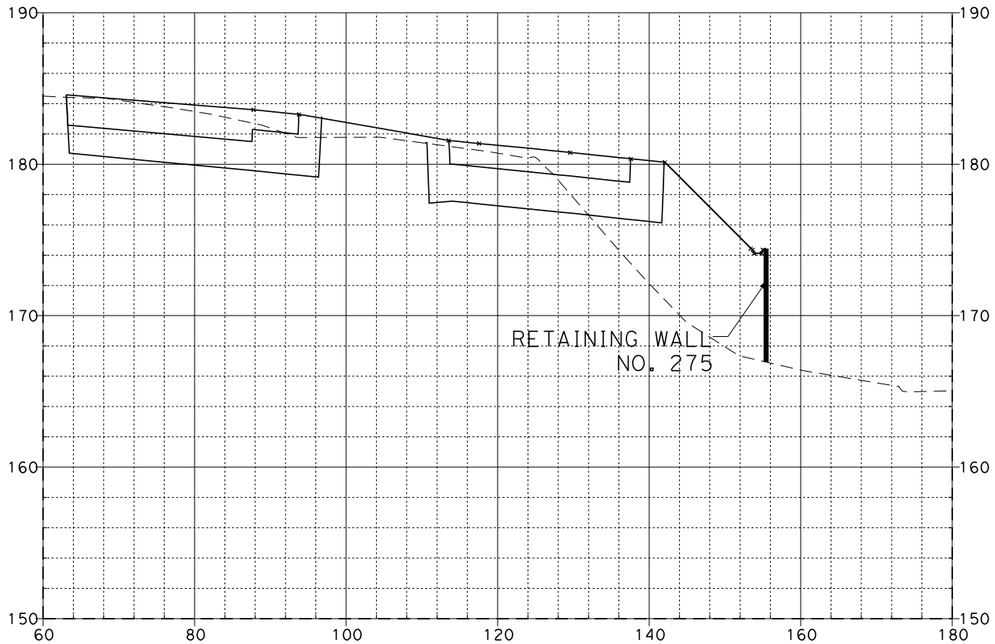

275+75.00

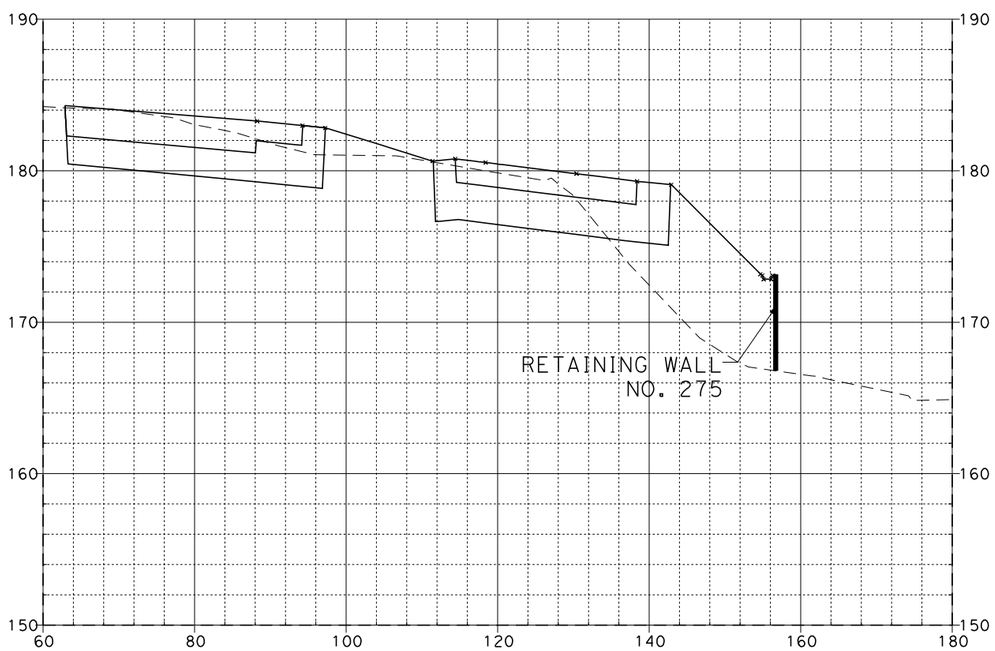

275+50.00

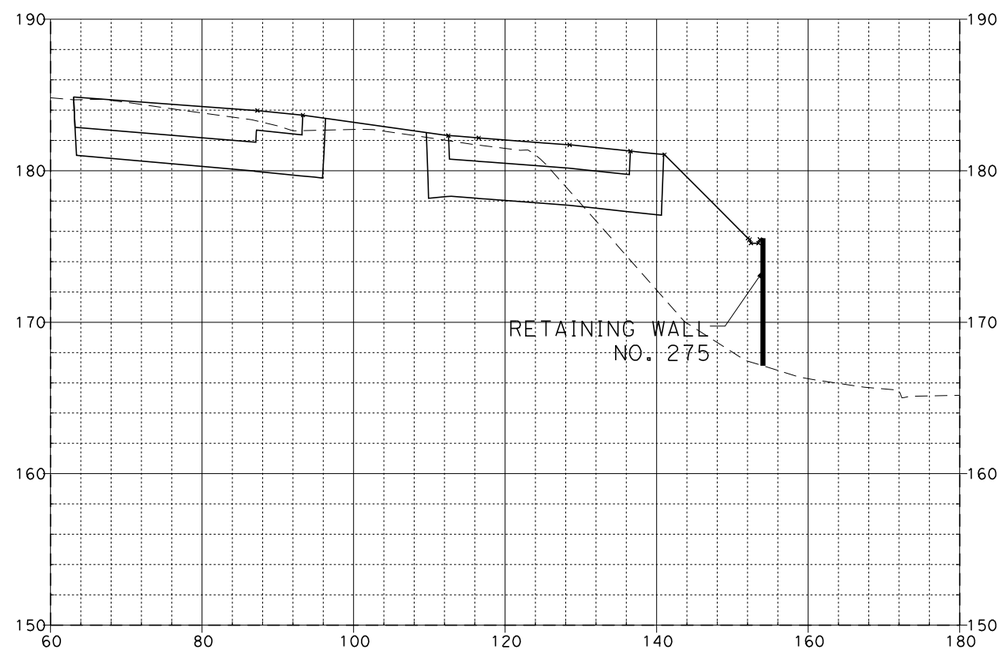

276+00.00

SR-57 MAINLINE

EA 0F0401

SCALE: Horiz 1"=20'
Vert 1"=10'

08\03\11

Dist	COUNTY	ROUTE	POST MILES TOTAL PROJECT	SHEET No.	TOTAL SHEETS
12	Ora	57	12.2/15.2		

FOR EARTHWORK DEVELOPMENT ONLY

...\d0282599\Cross_Sections.dgn

EA 0F0401

SCALE: Horiz 1"=20'
Vert 1"=10'

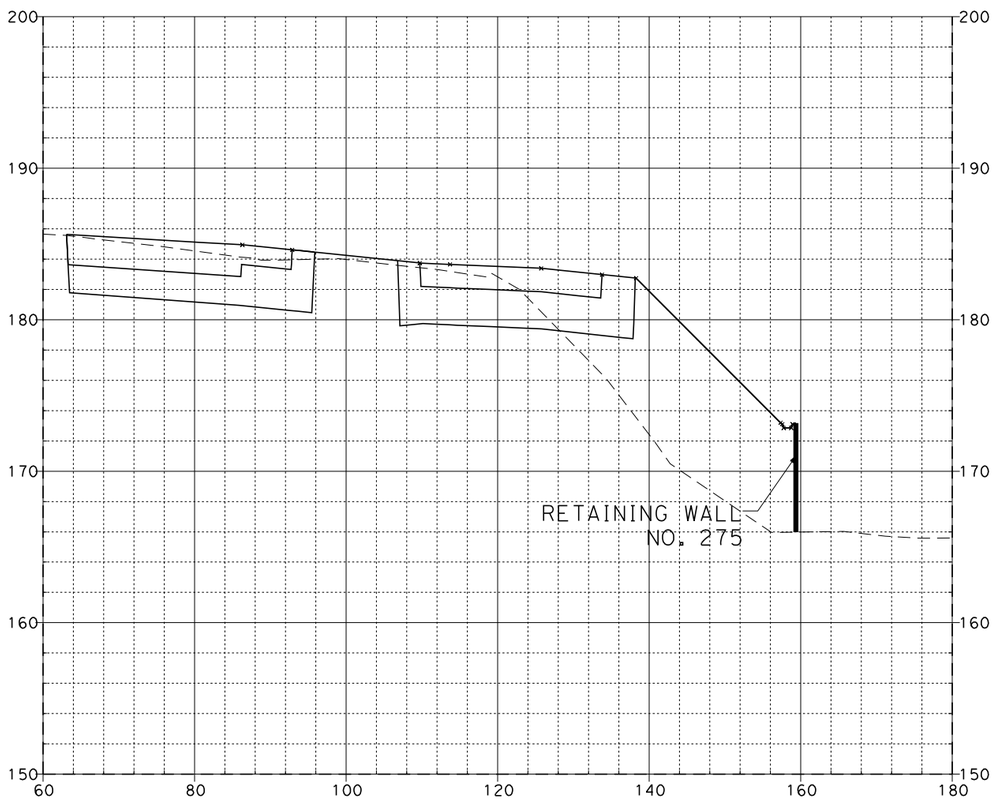

276+50.00

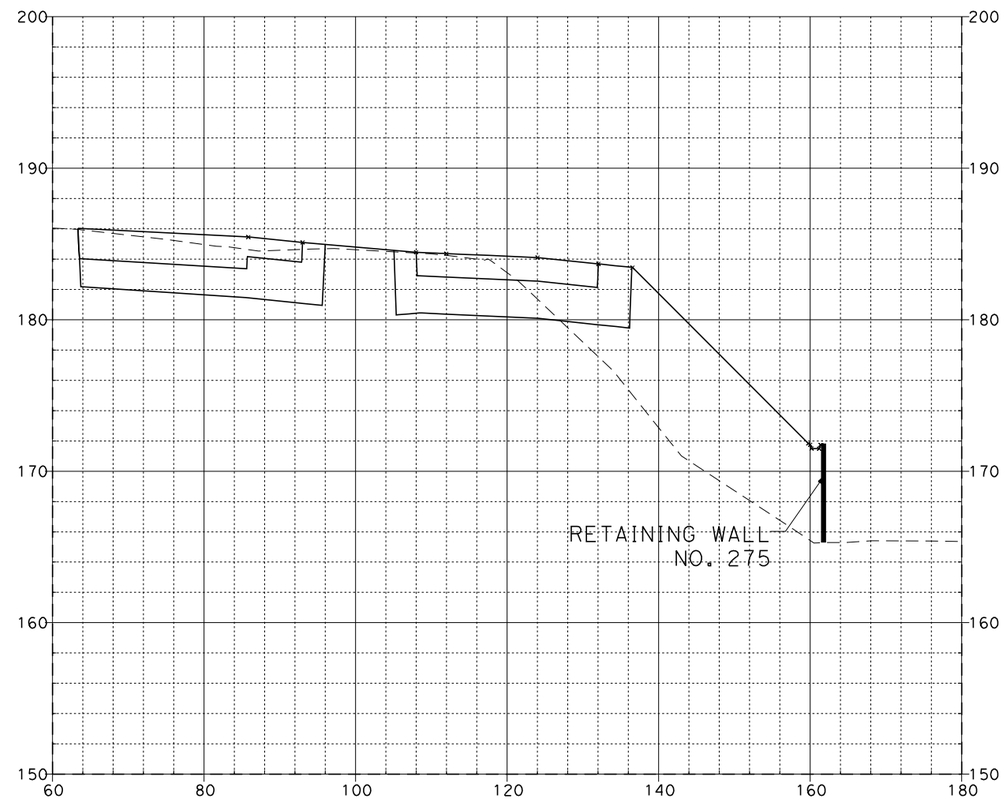

276+75.59

SR-57 MAINLINE

08\03\11

Dist	COUNTY	ROUTE	POST MILES TOTAL PROJECT	SHEET No.	TOTAL SHEETS
12	Ora	57	12.2/15.2		

FOR EARTHWORK DEVELOPMENT ONLY

...\d0282599\Cross_Sections.dgn

EA 0F0401

SCALE: Horiz 1"=20'
Vert 1"=10'

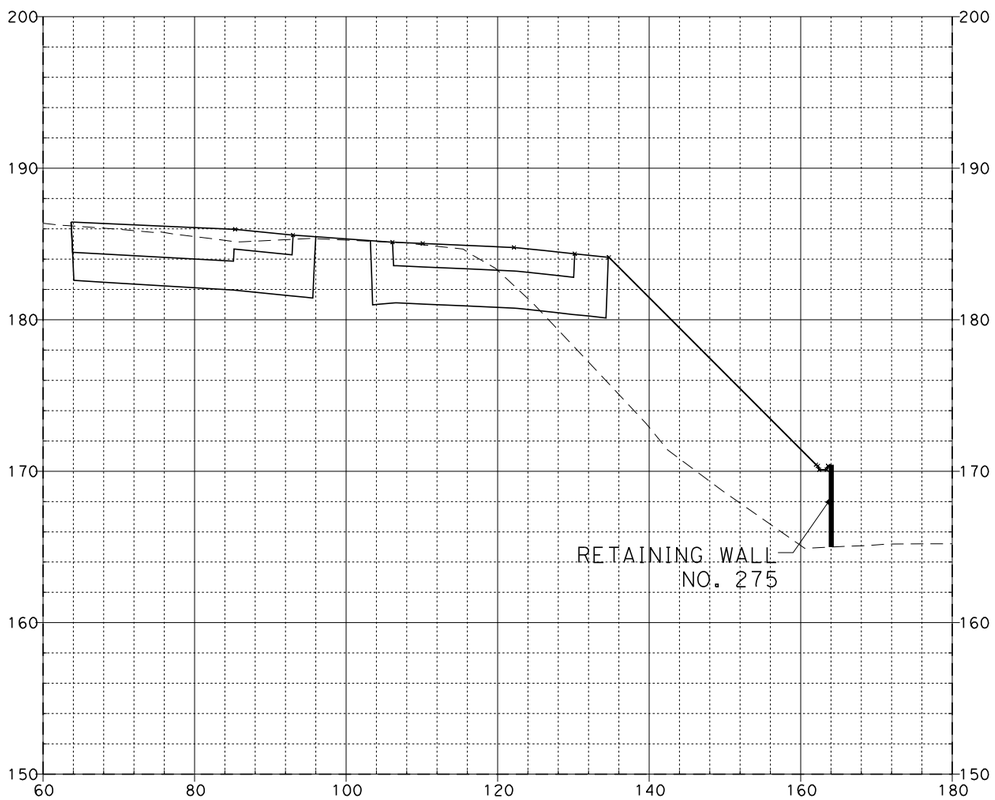

277+00.00

SR-57 MAINLINE

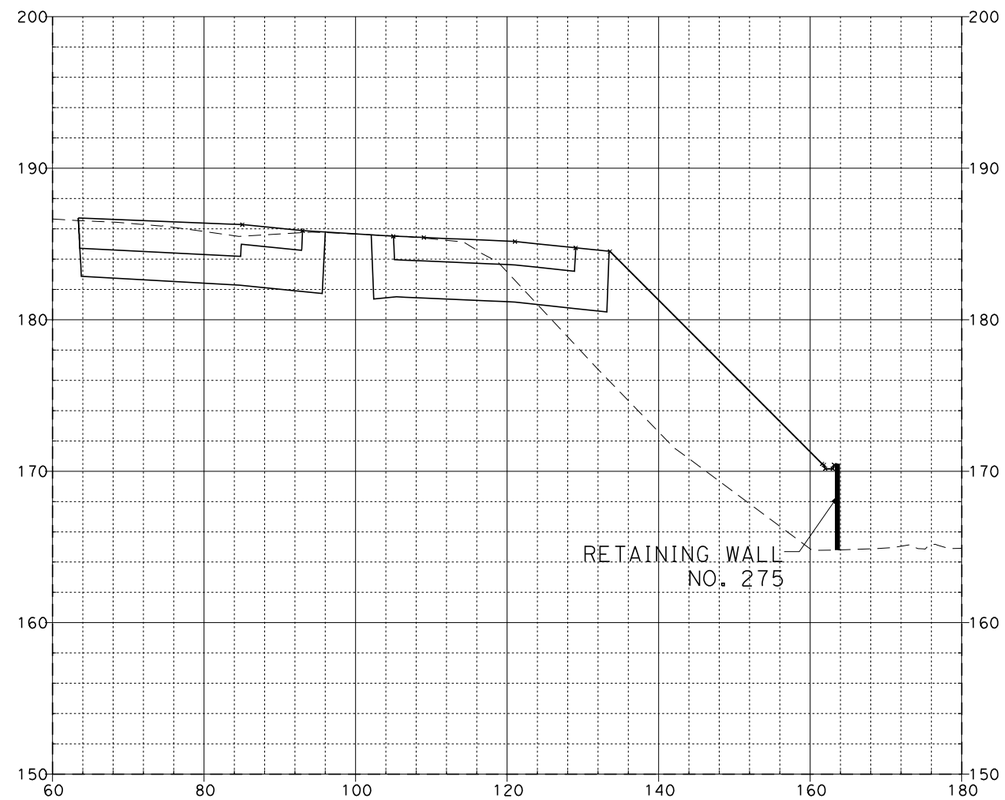

277+15.00

08\03\11

Dist	COUNTY	ROUTE	POST MILES TOTAL PROJECT	SHEET No.	TOTAL SHEETS
12	Ora	57	12.2/15.2		

FOR EARTHWORK DEVELOPMENT ONLY

...\d0282599\Cross_Sections.dgn

EA 0F0401

SCALE: Horiz 1"=20'
Vert 1"=10'

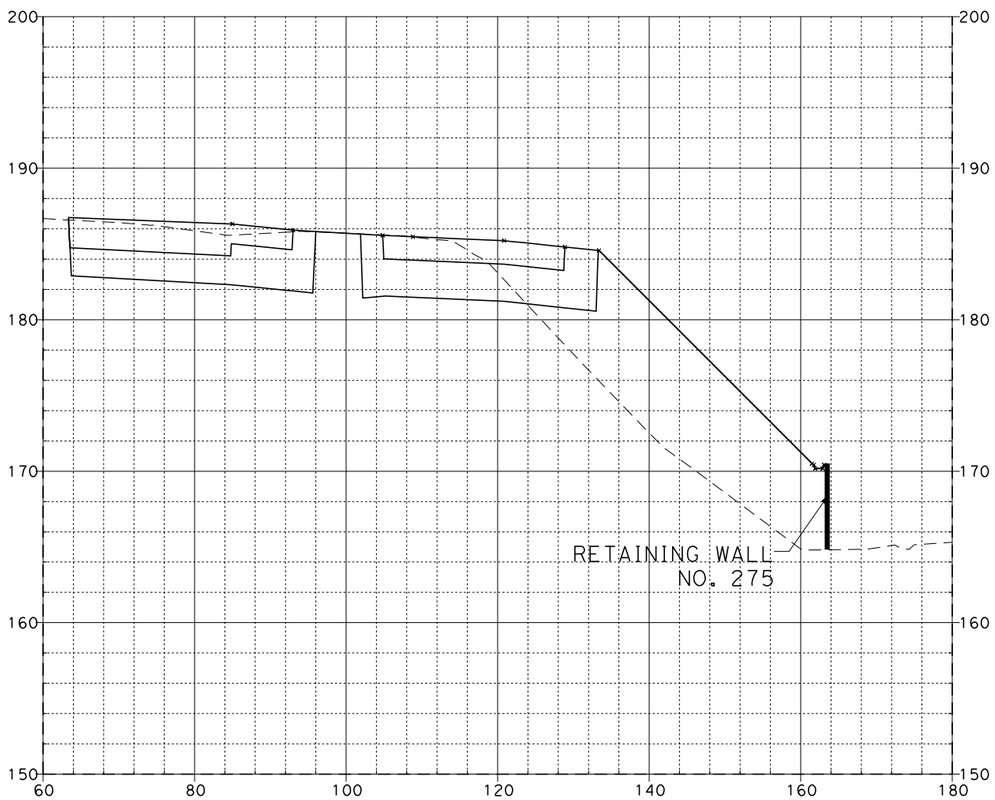

277+17.11

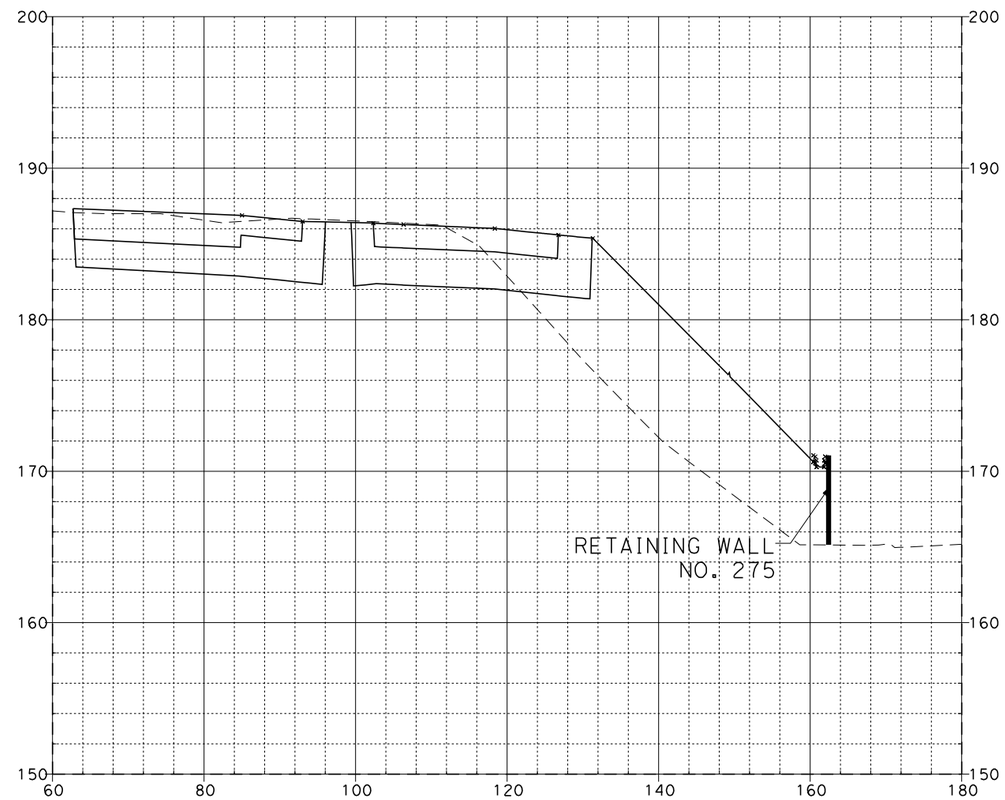

277+50.00

SR-57 MAINLINE

08\03\11

Dist	COUNTY	ROUTE	POST MILES TOTAL PROJECT	SHEET No.	TOTAL SHEETS
12	Ora	57	12.2/15.2		

FOR EARTHWORK DEVELOPMENT ONLY

...\d0282599\Cross_Sections.dgn

EA 0F0401

SCALE: Horiz 1"=20'
Vert 1"=10'

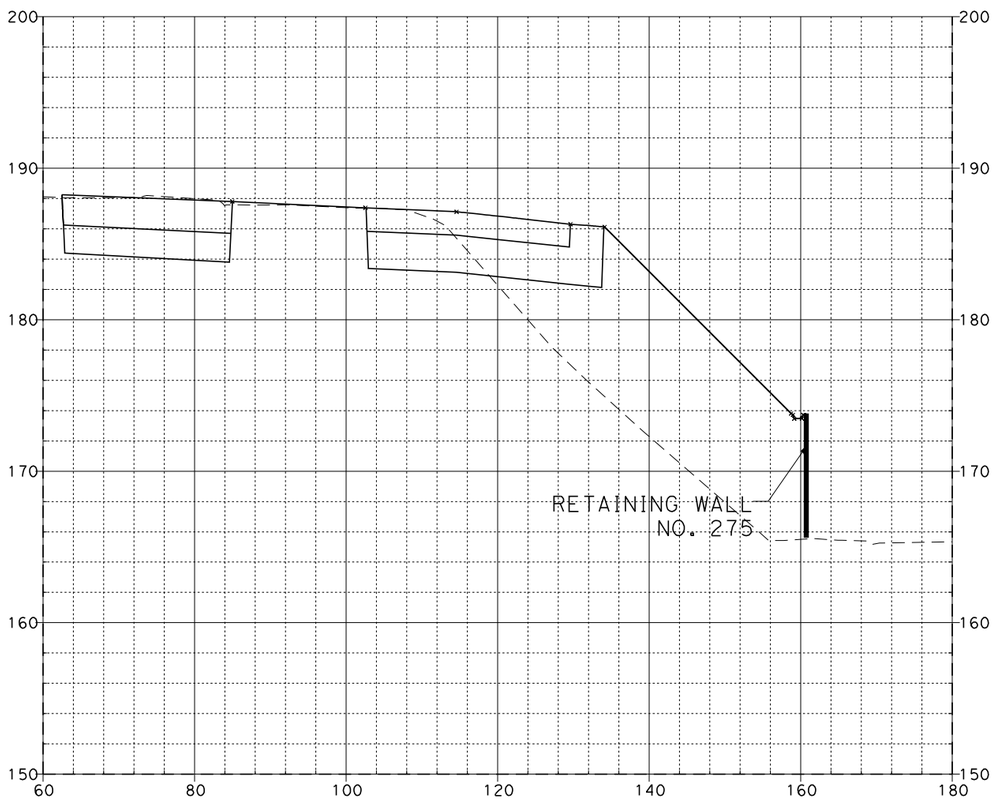

278+00.00

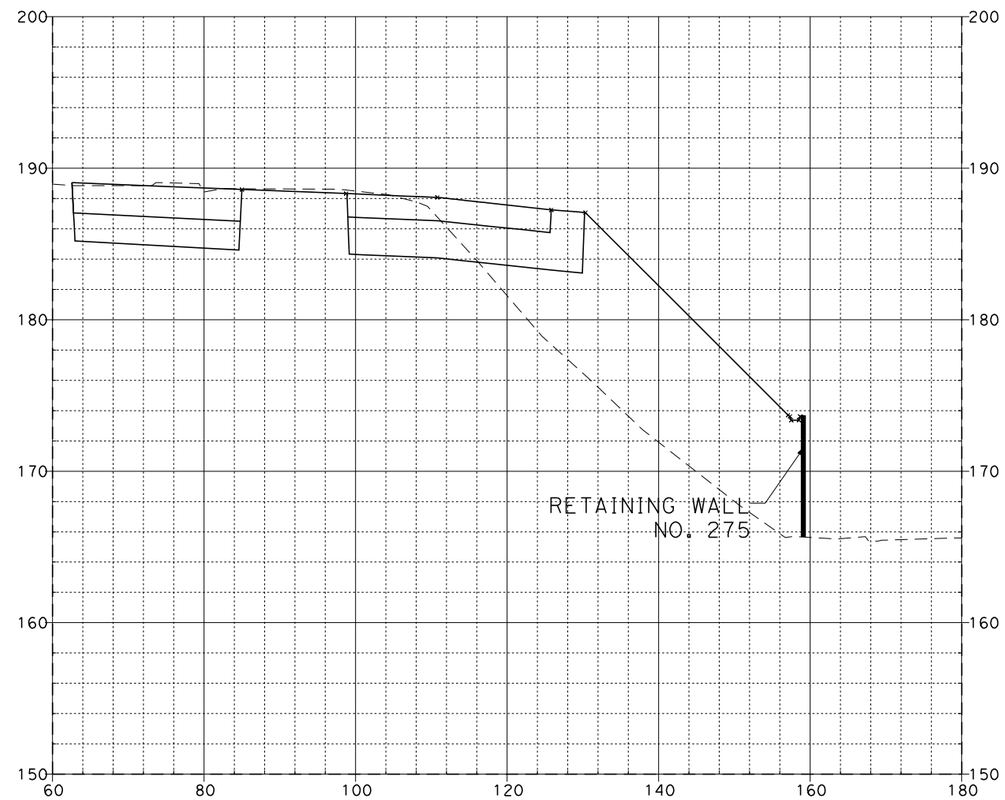

278+50.00

SR-57 MAINLINE

08\03\11

Dist	COUNTY	ROUTE	POST MILES TOTAL PROJECT	SHEET No.	TOTAL SHEETS
12	Ora	57	12.2/15.2		

FOR EARTHWORK DEVELOPMENT ONLY

...\d0282599\Cross_Sections.dgn

EA 0F0401

SCALE: Horiz 1"=20'
Vert 1"=10'

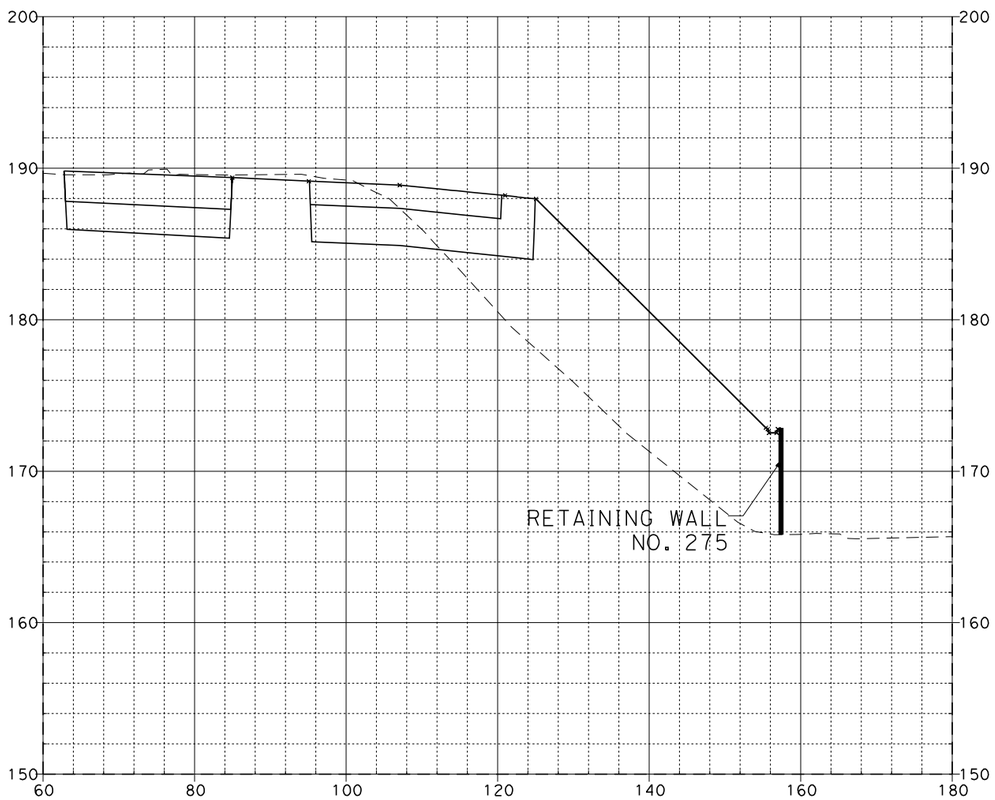

279+00.00

279+50.00

SR-57 MAINLINE

08\03\11

Dist	COUNTY	ROUTE	POST MILES TOTAL PROJECT	SHEET No.	TOTAL SHEETS
12	Ora	57	12.2/15.2		

FOR EARTHWORK DEVELOPMENT ONLY

...\d0282599\Cross_Sections.dgn

EA 0F0401

SCALE: Horiz 1"=20'
Vert 1"=10'

280+00.00

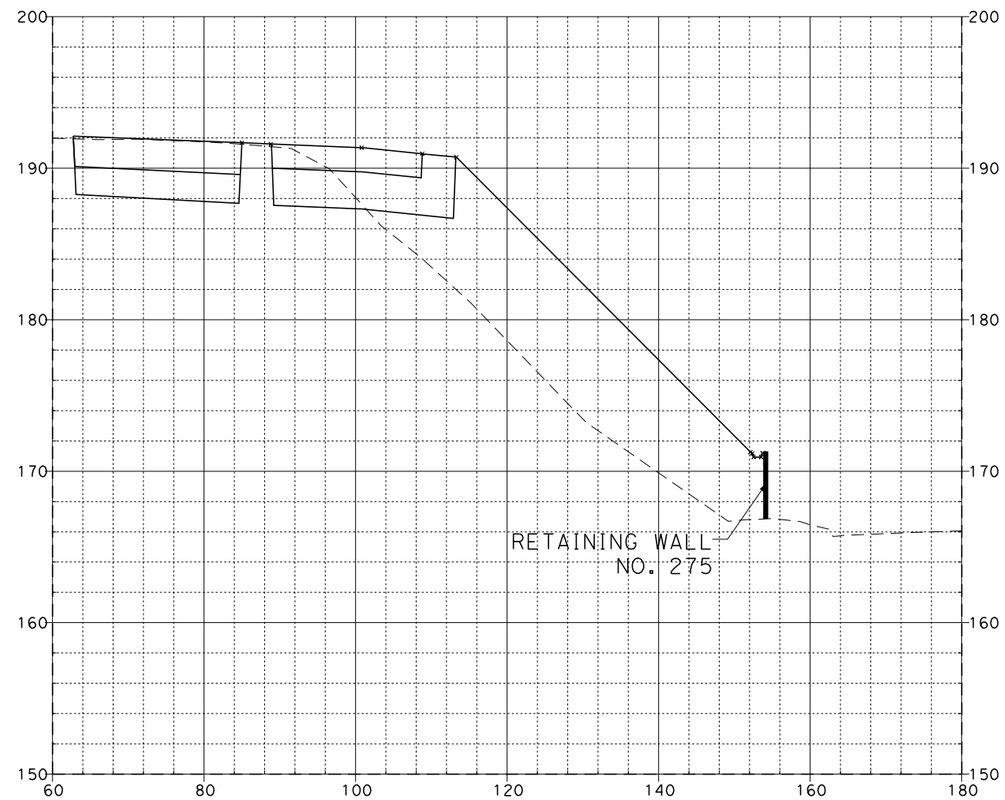

280+50.00

SR-57 MAINLINE

08\03\11

Dist	COUNTY	ROUTE	POST MILES TOTAL PROJECT	SHEET No.	TOTAL SHEETS
12	Ora	57	12.2/15.2		

FOR EARTHWORK DEVELOPMENT ONLY

...\d0282599\Cross_Sections.dgn

EA 0F0401

SCALE: Horiz 1"=20'
Vert 1"=10'

281+00.00

281+50.00

SR-57 MAINLINE

08\03\11

Dist	COUNTY	ROUTE	POST MILES TOTAL PROJECT	SHEET NO.	TOTAL SHEETS
12	Ora	57	12.2/15.2		

FOR EARTHWORK DEVELOPMENT ONLY

...\d0282599\Cross_Sections.dgn

EA OF0401

SCALE: Horiz 1"=20'
Vert 1"=10'

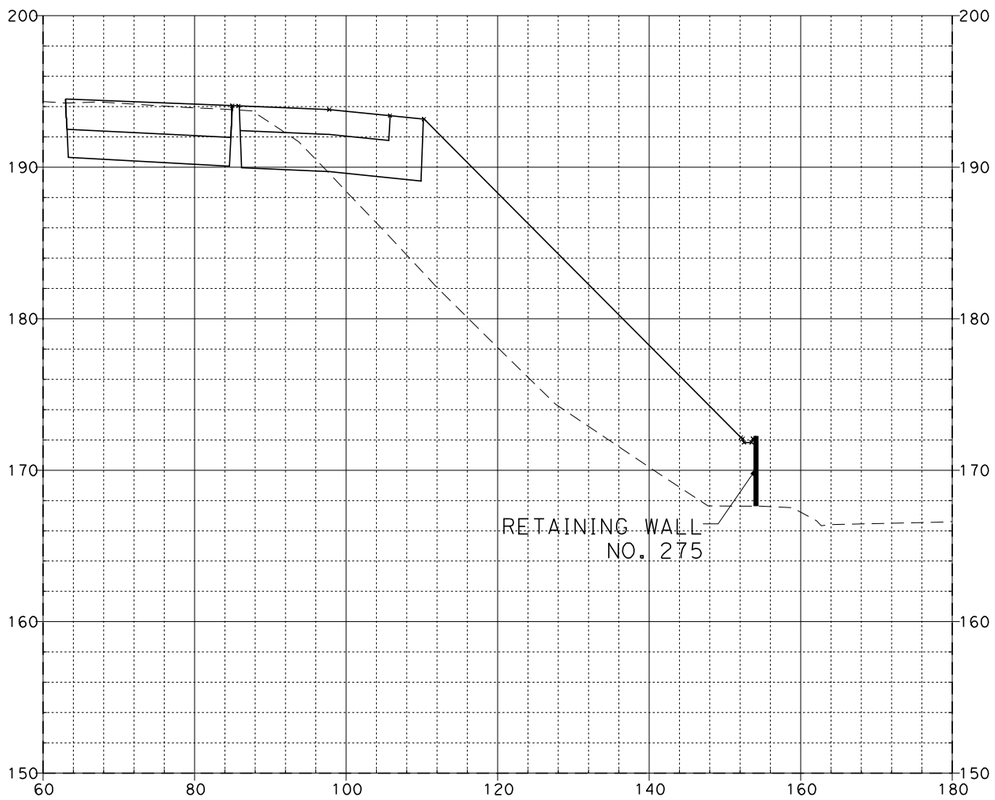

282+00.00

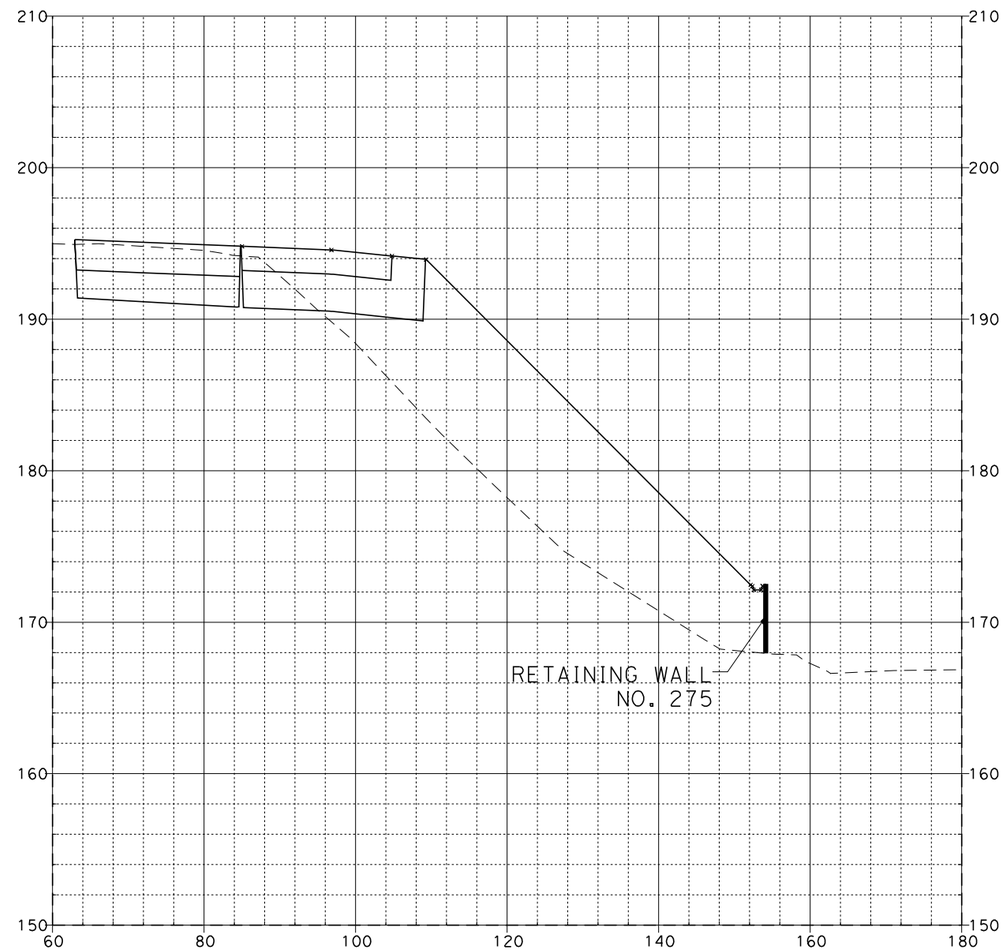

282+50.00

SR-57 MAINLINE

08\03\11

Dist	COUNTY	ROUTE	POST MILES TOTAL PROJECT	SHEET No.	TOTAL SHEETS
12	Ora	57	12.2/15.2		

FOR EARTHWORK DEVELOPMENT ONLY

...\d0282599\Cross_Sections.dgn

EA 0F0401

SCALE: Horiz 1"=20'
Vert 1"=10'

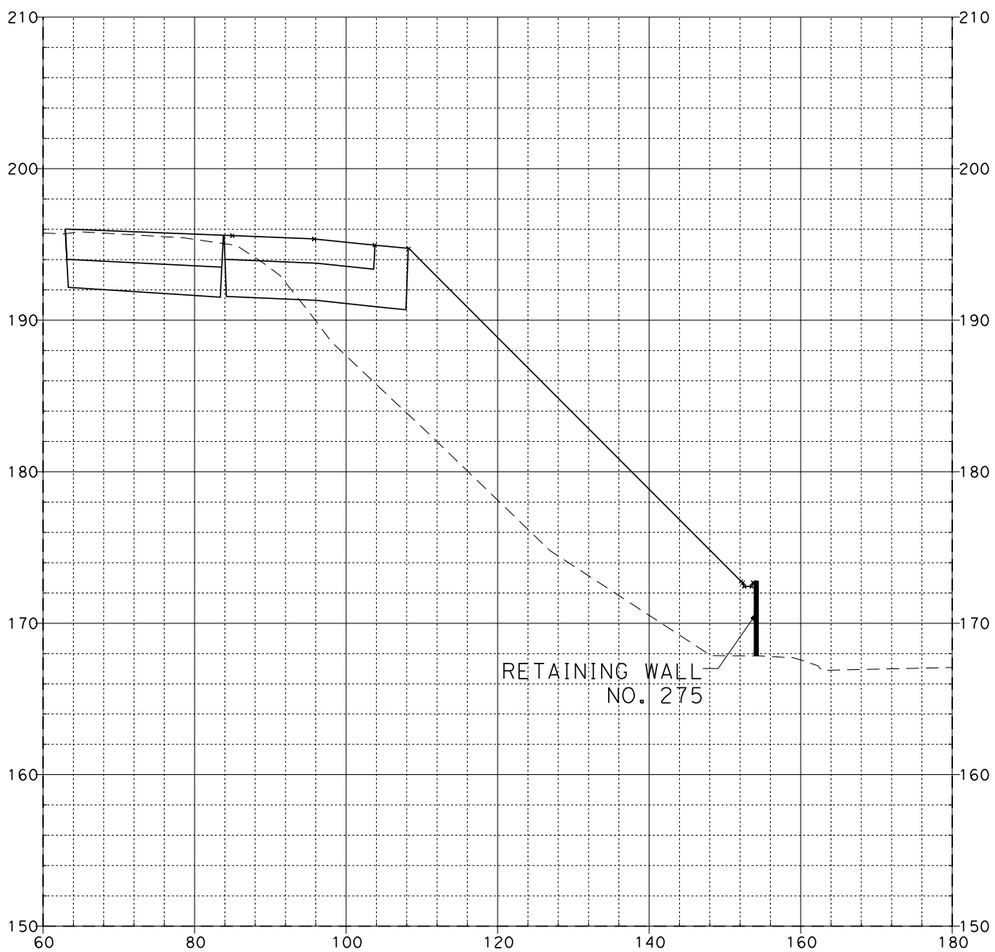

283+00.00

SR-57 MAINLINE

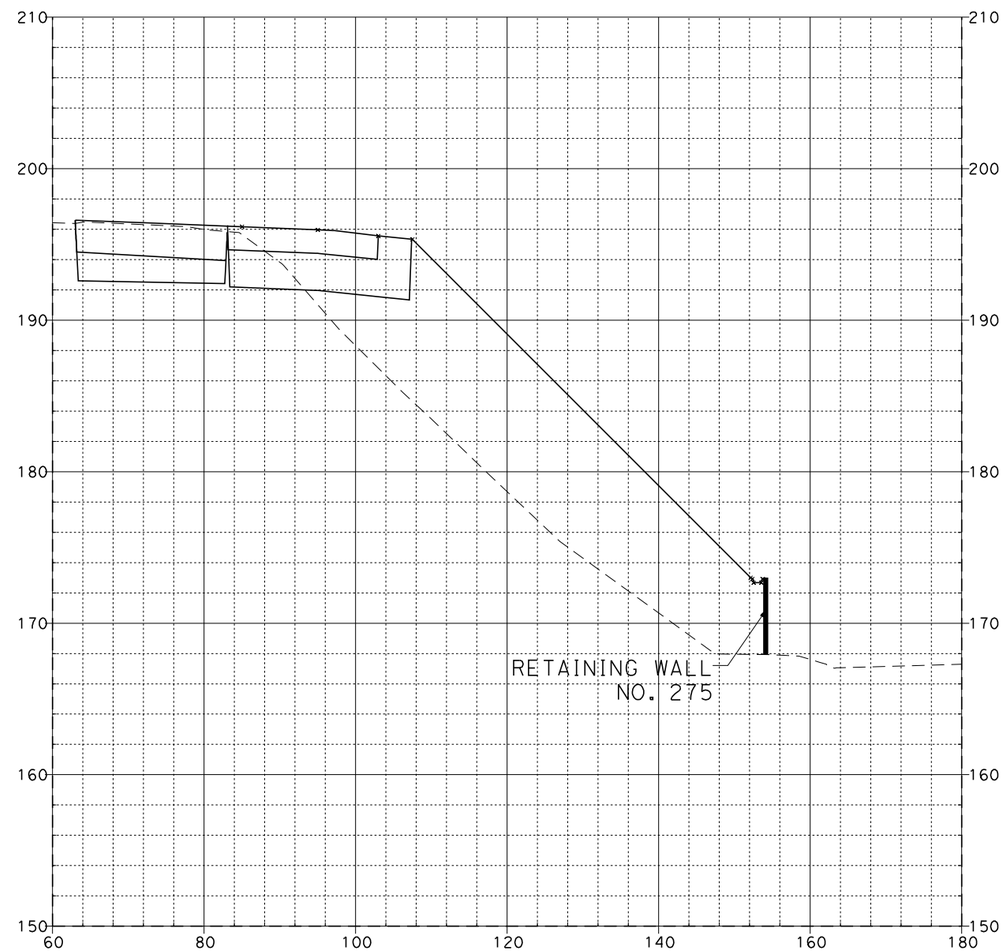

283+40.00

08\03\11

Dist	COUNTY	ROUTE	POST MILES TOTAL PROJECT	SHEET No.	TOTAL SHEETS
12	Ora	57	12.2/15.2		

FOR EARTHWORK DEVELOPMENT ONLY

...\d0282599\Cross_Sections.dgn

EA 0F0401

SCALE: Horiz 1"=20'
Vert 1"=10'

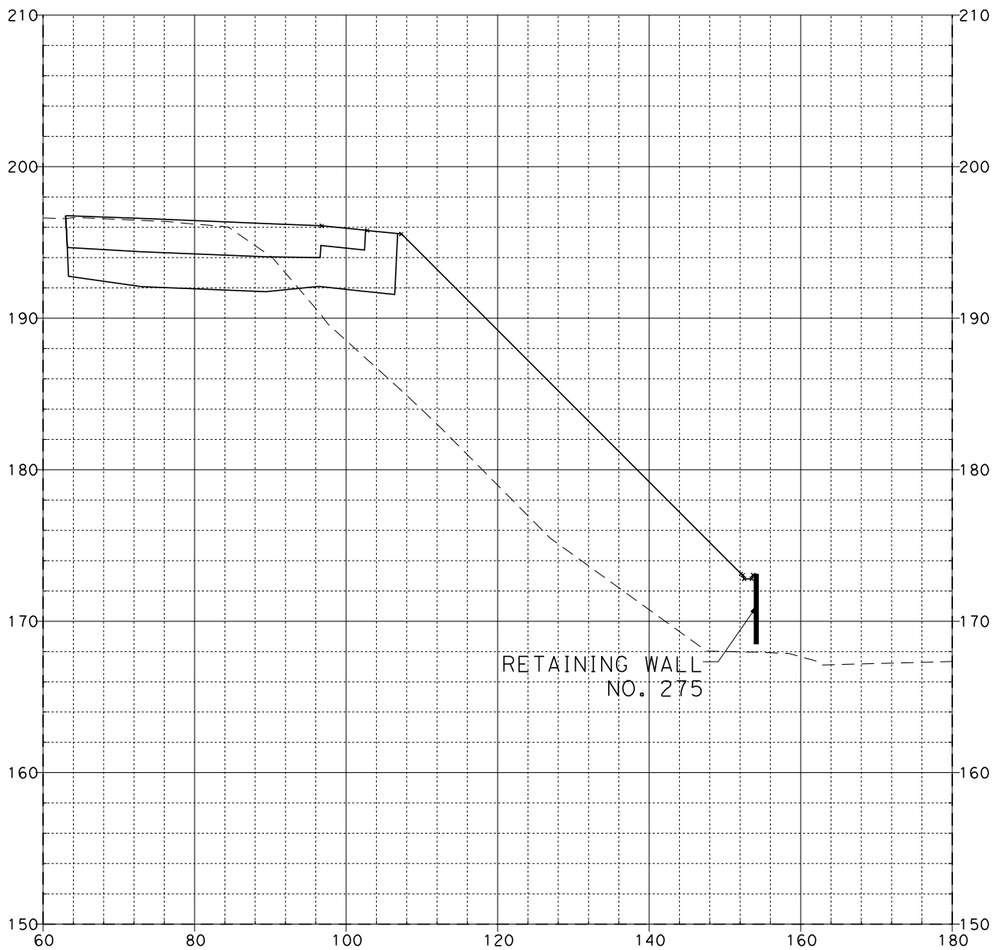

283+50.00

SR-57 MAINLINE

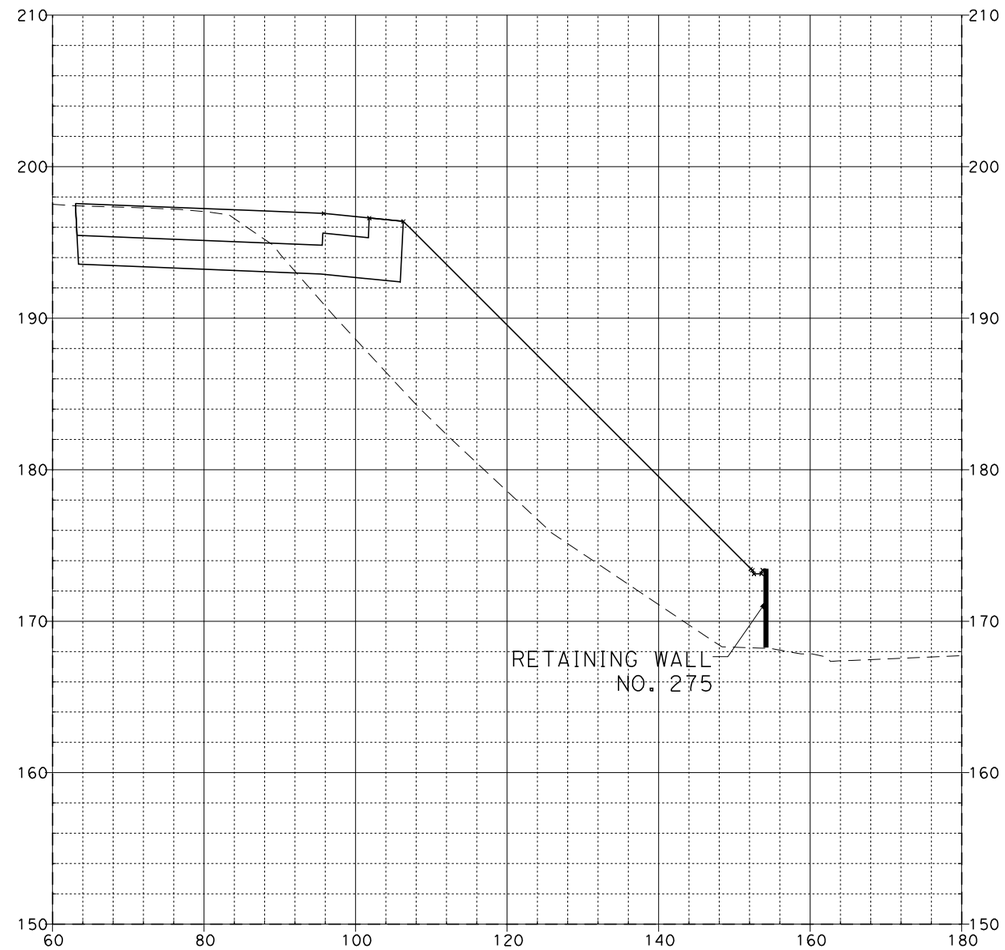

284+00.00

08\03\11

Dist	COUNTY	ROUTE	POST MILES TOTAL PROJECT	SHEET No.	TOTAL SHEETS
12	Ora	57	12.2/15.2		

FOR EARTHWORK DEVELOPMENT ONLY

...\d0282599\Cross_Sections.dgn

EA 0F0401

SCALE: Horiz 1"=20'
Vert 1"=10'

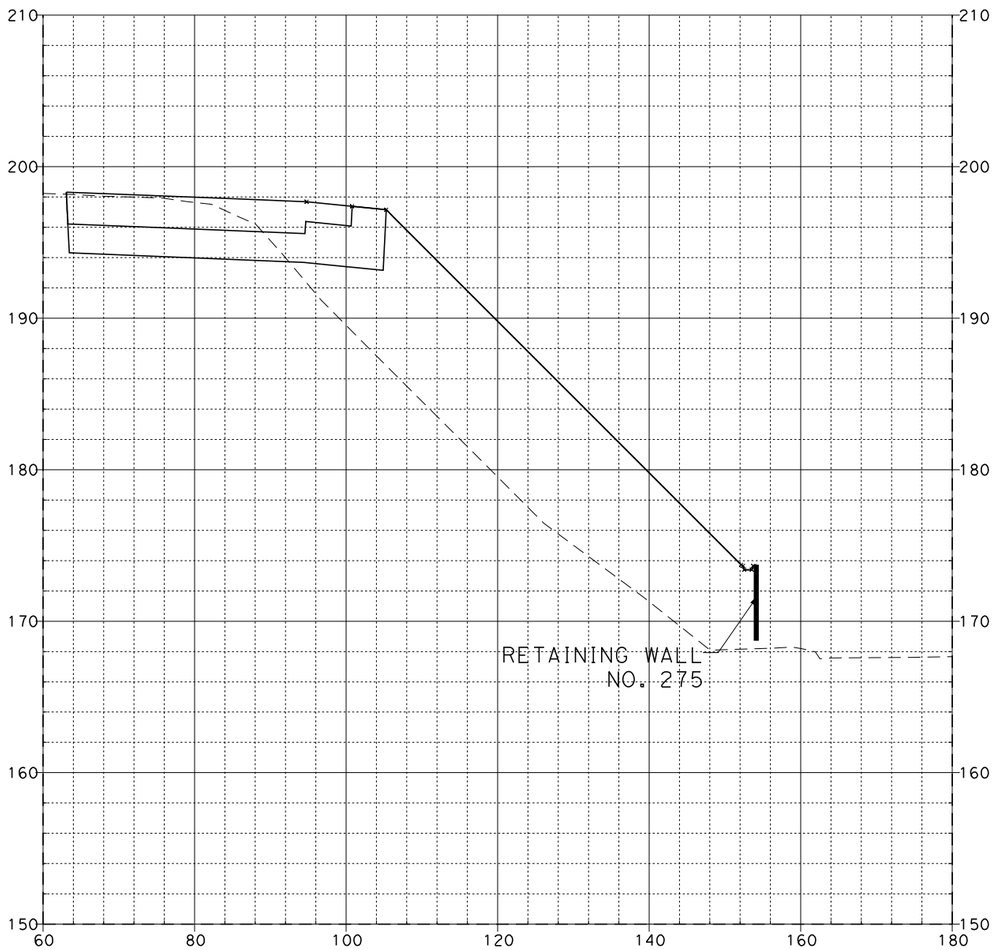

284+50.00

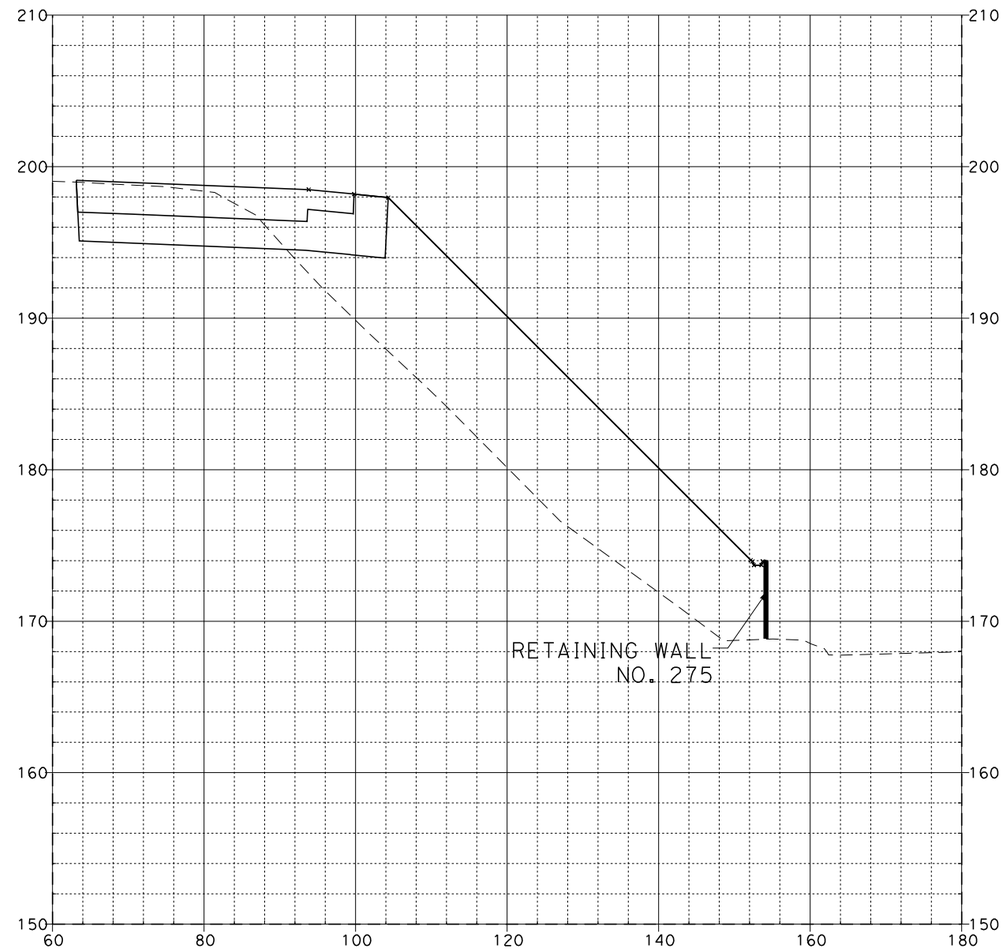

285+00.00

SR-57 MAINLINE

08\03\11

Dist	COUNTY	ROUTE	POST MILES TOTAL PROJECT	SHEET No.	TOTAL SHEETS
12	Ora	57	12.2/15.2		

FOR EARTHWORK DEVELOPMENT ONLY

...\d0282599\Cross_Sections.dgn

EA 0F0401

SCALE: Horiz 1"=20'
Vert 1"=10'

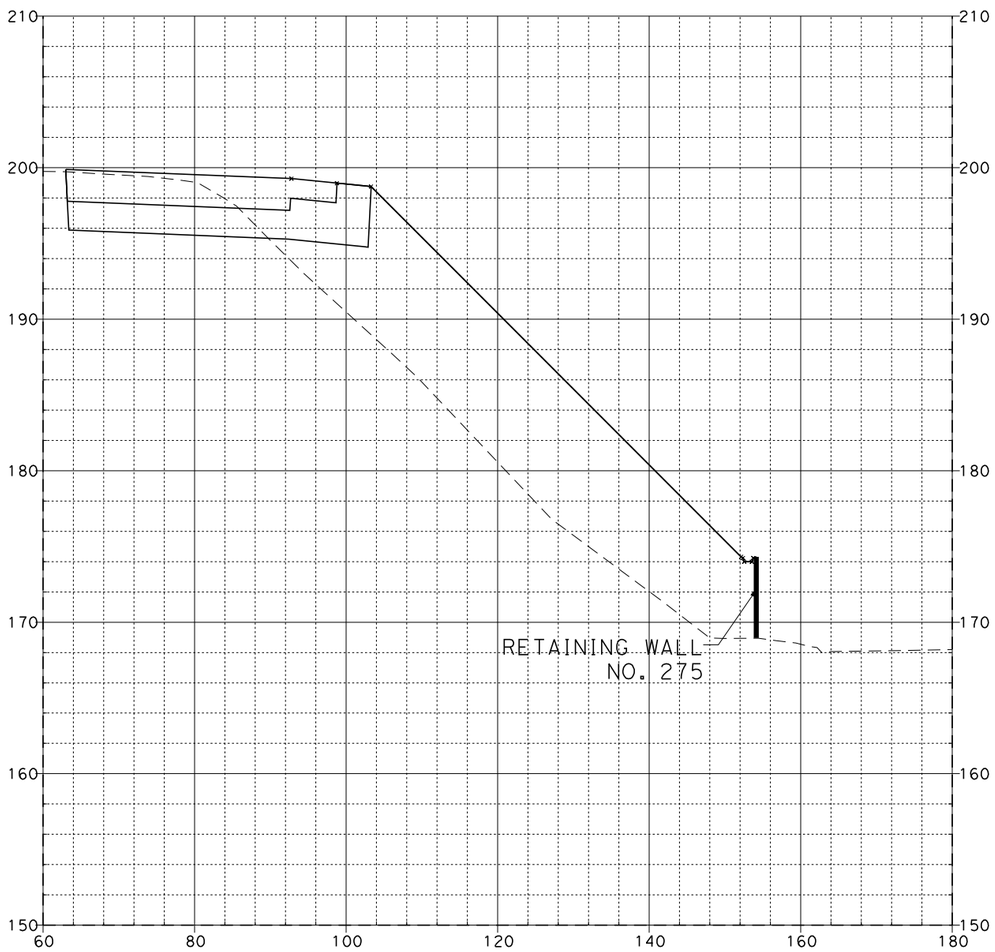

285+50.00

SR-57 MAINLINE

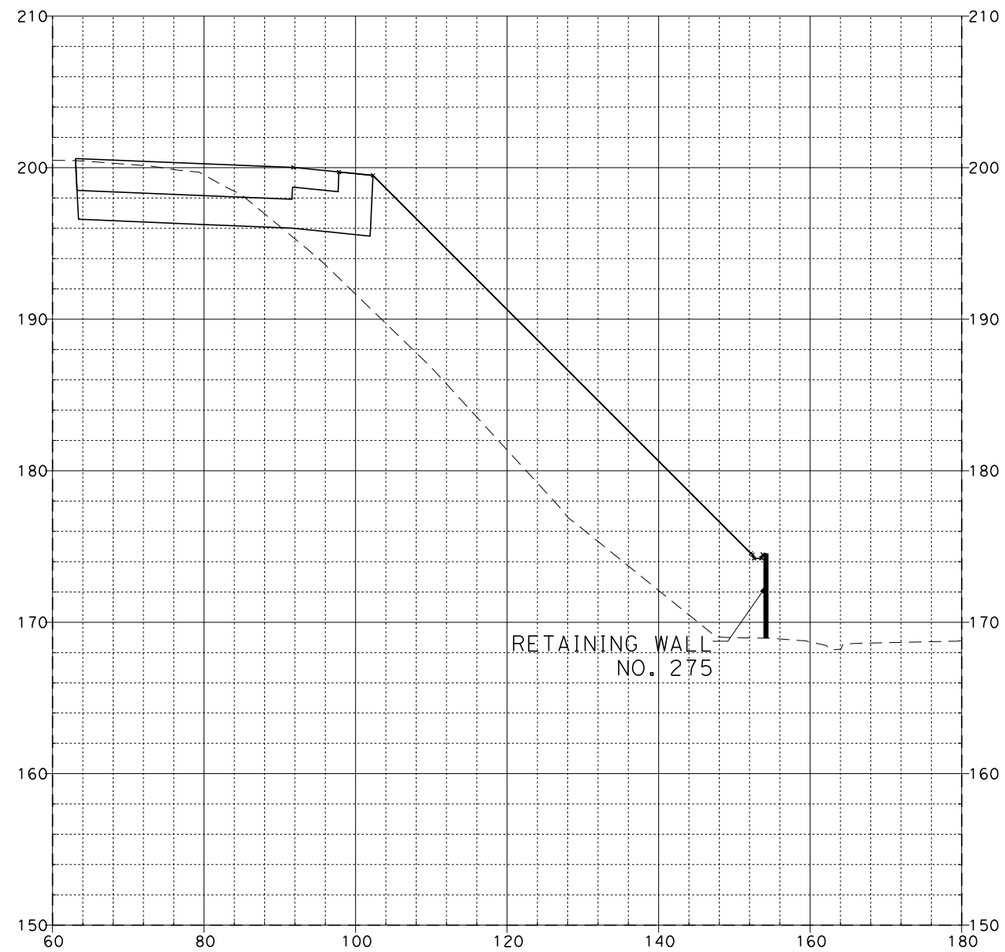

286+00.00

08\03\11

Dist	COUNTY	ROUTE	POST MILES TOTAL PROJECT	SHEET NO.	TOTAL SHEETS
12	Ora	57	12.2/15.2		

FOR EARTHWORK DEVELOPMENT ONLY

...\d0282599\Cross_Sections.dgn

EA 0F0401

SCALE: Horiz 1"=20'
Vert 1"=10'

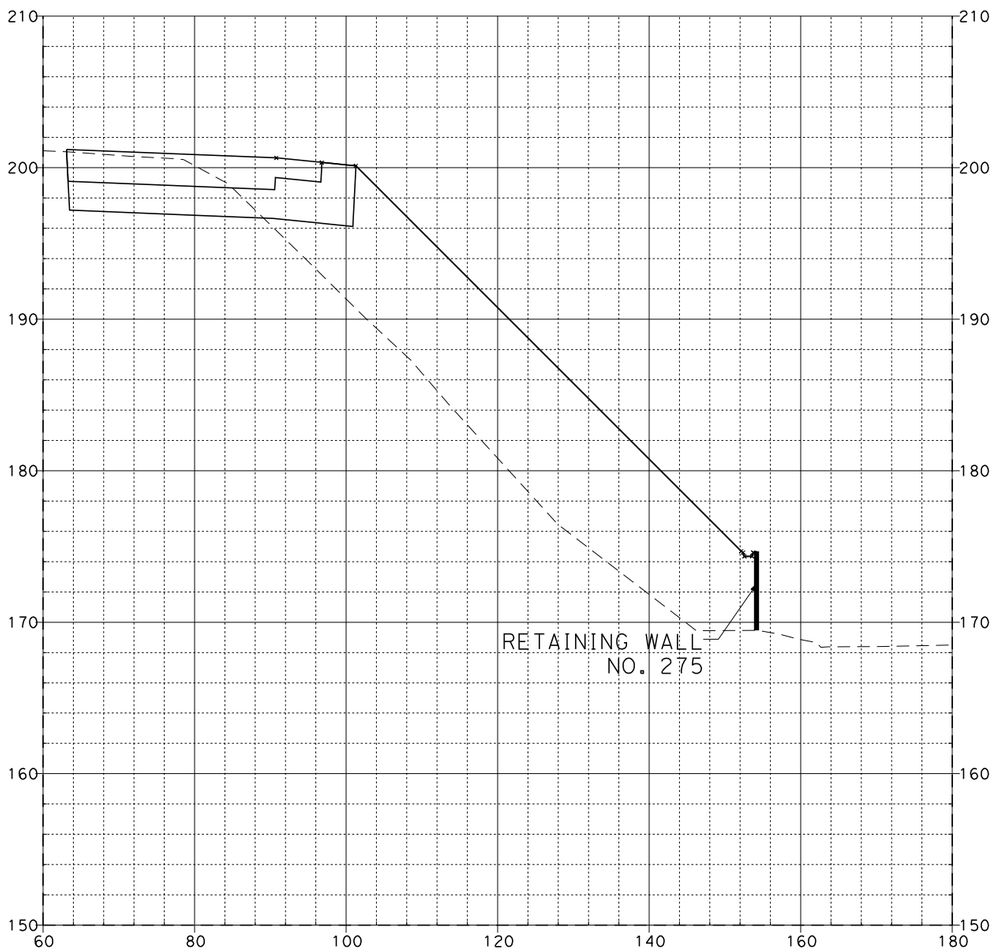

286+50.00

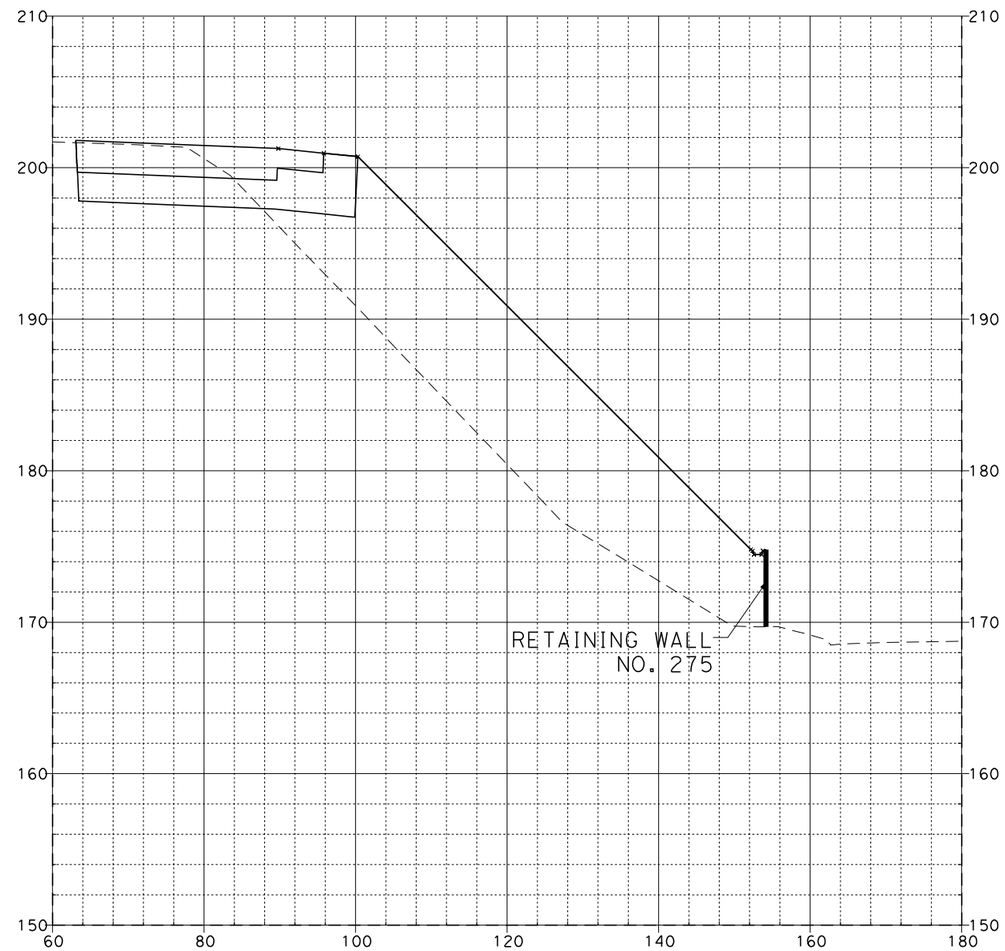

287+00.00

SR-57 MAINLINE

08\03\11

Dist	COUNTY	ROUTE	POST MILES TOTAL PROJECT	SHEET No.	TOTAL SHEETS
12	Ora	57	12.2/15.2		

FOR EARTHWORK DEVELOPMENT ONLY

...\d0282599\Cross_Sections.dgn

EA 0F0401

SCALE: Horiz 1"=20'
Vert 1"=10'

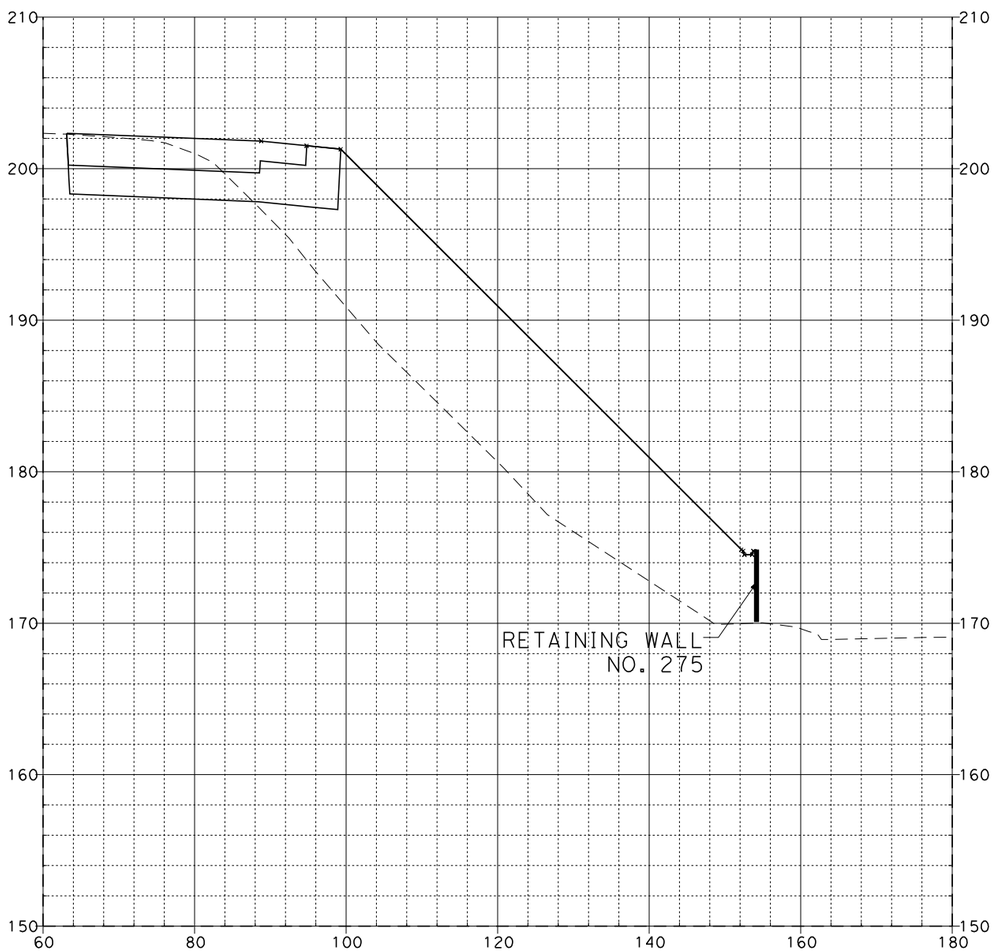

287+50.00

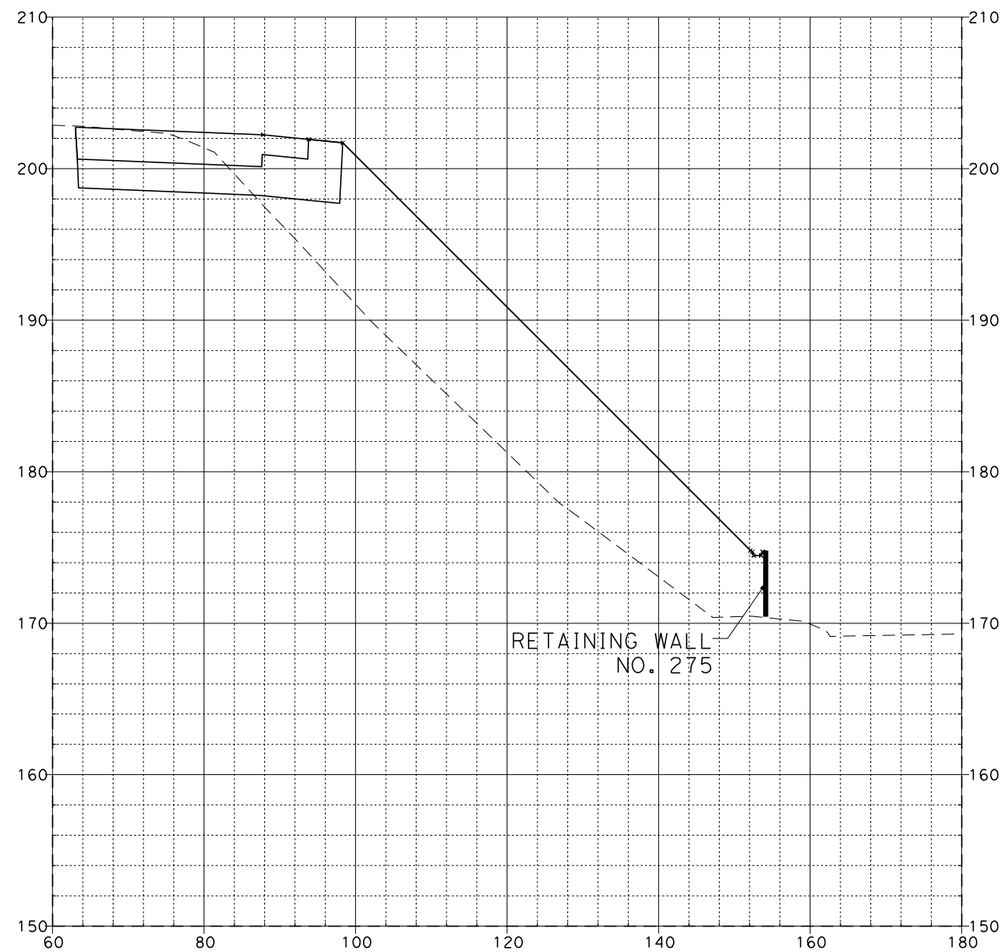

288+00.00

SR-57 MAINLINE

08\03\11

Dist	COUNTY	ROUTE	POST MILES TOTAL PROJECT	SHEET No.	TOTAL SHEETS
12	Ora	57	12.2/15.2		

FOR EARTHWORK DEVELOPMENT ONLY

...\d0282599\Cross_Sections.dgn

EA 0F0401

SCALE: Horiz 1"=20'
Vert 1"=10'

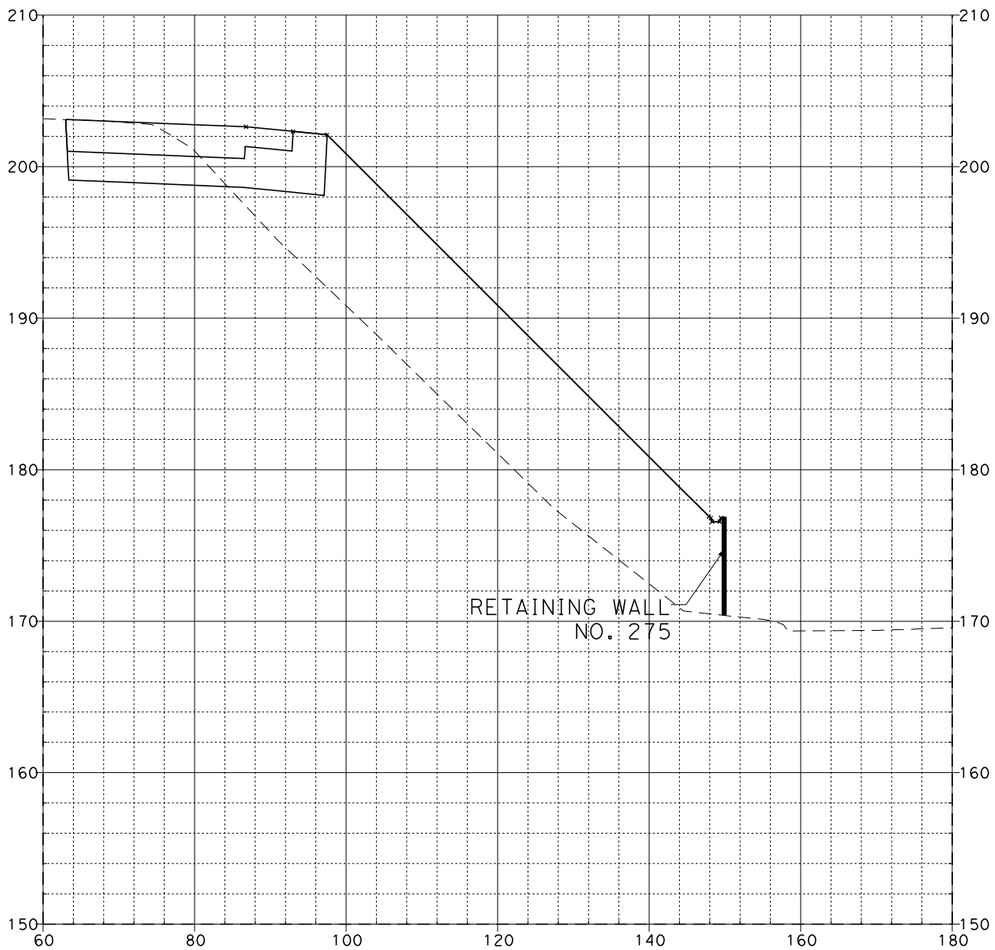

288+50.00

SR-57 MAINLINE

289+00.00

08\03\11

Dist	COUNTY	ROUTE	POST MILES TOTAL PROJECT	SHEET No.	TOTAL SHEETS
12	Ora	57	12.2/15.2		

FOR EARTHWORK DEVELOPMENT ONLY

...\d0282599\Cross_Sections.dgn

EA 0F0401

SCALE: Horiz 1"=20'
Vert 1"=10'

289+40.14

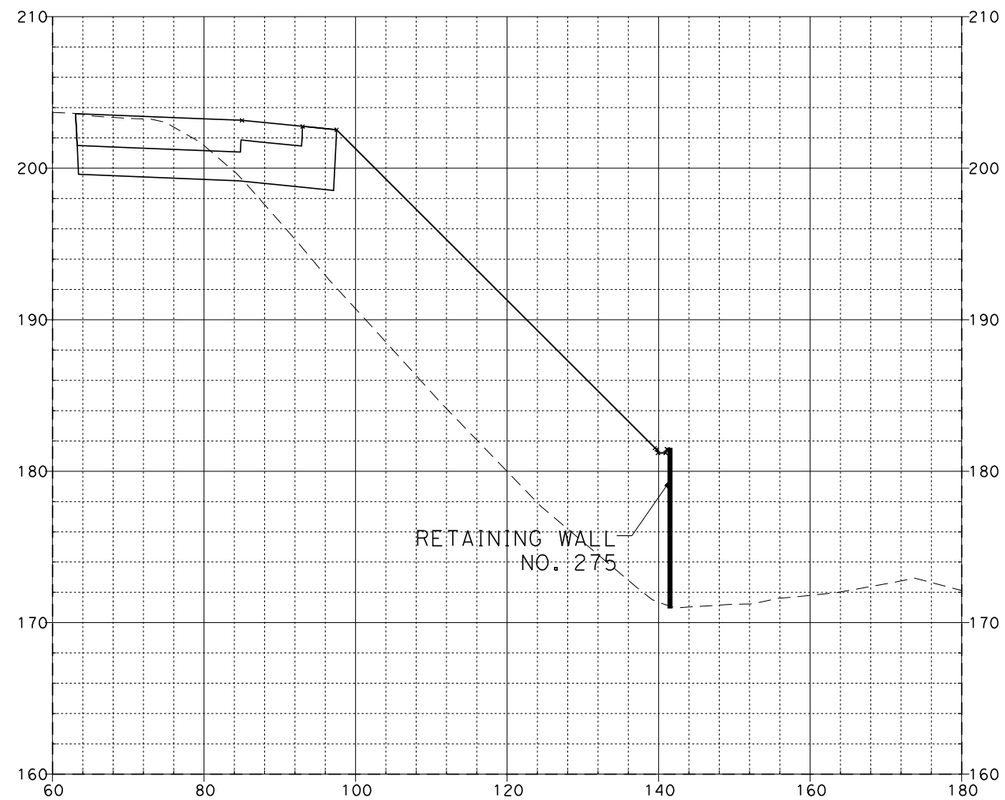

289+50.00

SR-57 MAINLINE

08\03\11

Dist	COUNTY	ROUTE	POST MILES TOTAL PROJECT	SHEET No.	TOTAL SHEETS
12	Ora	57	12.2/15.2		

FOR EARTHWORK DEVELOPMENT ONLY

...\d0282599\Cross_Sections.dgn

EA 0F0401

SCALE: Horiz 1"=20'
Vert 1"=10'

290+00.00

290+08.64

SR-57 MAINLINE

08\03\11

Dist	COUNTY	ROUTE	POST MILES TOTAL PROJECT	SHEET No.	TOTAL SHEETS
12	Ora	57	12.2/15.2		

FOR EARTHWORK DEVELOPMENT ONLY

...\d0282599\Cross_Sections.dgn

EA 0F0401

SCALE: Horiz 1"=20'
Vert 1"=10'

290+12.02

290+19.51

SR-57 MAINLINE

08\03\11

Dist	COUNTY	ROUTE	POST MILES TOTAL PROJECT	SHEET No.	TOTAL SHEETS
12	Ora	57	12.2/15.2		

FOR EARTHWORK DEVELOPMENT ONLY

...\d0282599\Cross_Sections.dgn

EA 0F0401

SCALE: Horiz 1"=20'
Vert 1"=10'

290+50.00

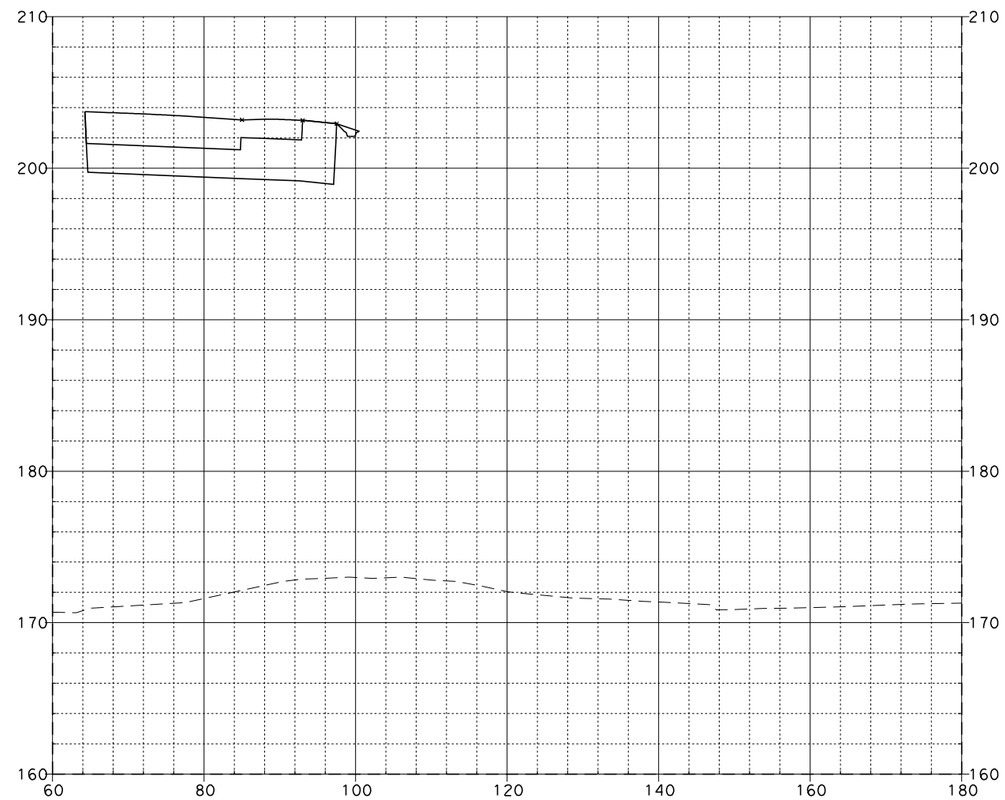

291+00.00

SR-57 MAINLINE

08\03\11

Dist	COUNTY	ROUTE	POST MILES TOTAL PROJECT	SHEET No.	TOTAL SHEETS
12	Ora	57	12.2/15.2		

FOR EARTHWORK DEVELOPMENT ONLY

...\d0282599\Cross_Sections.dgn

EA 0F0401

SCALE: Horiz 1"=20'
Vert 1"=10'

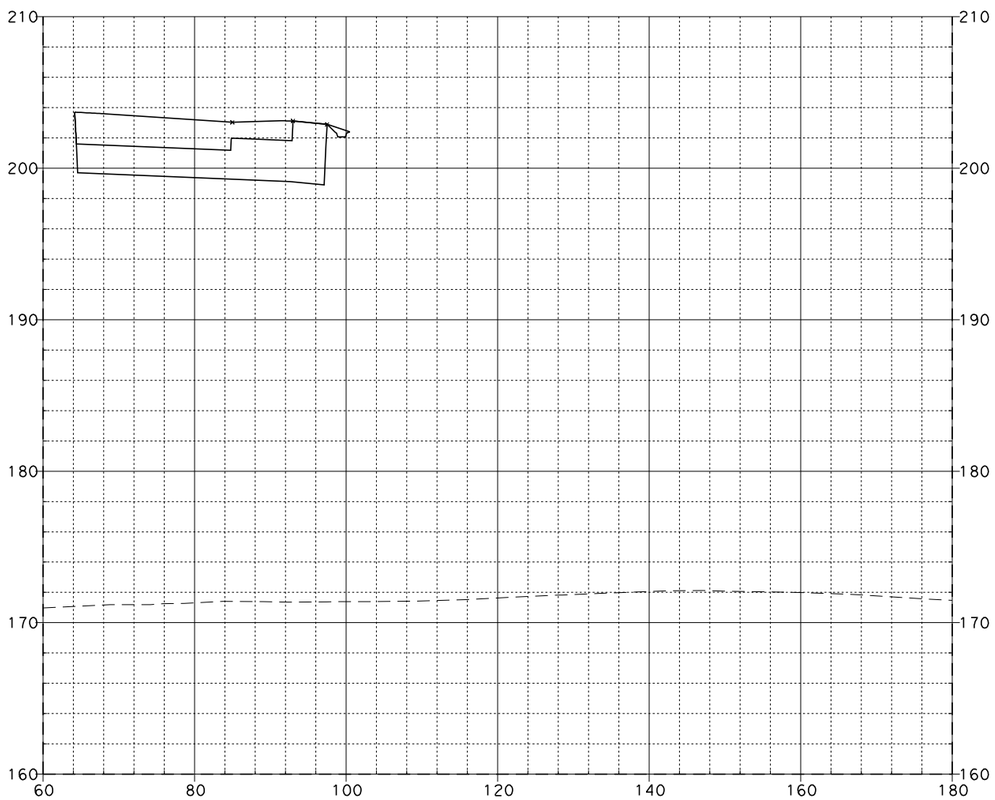

291+50.00

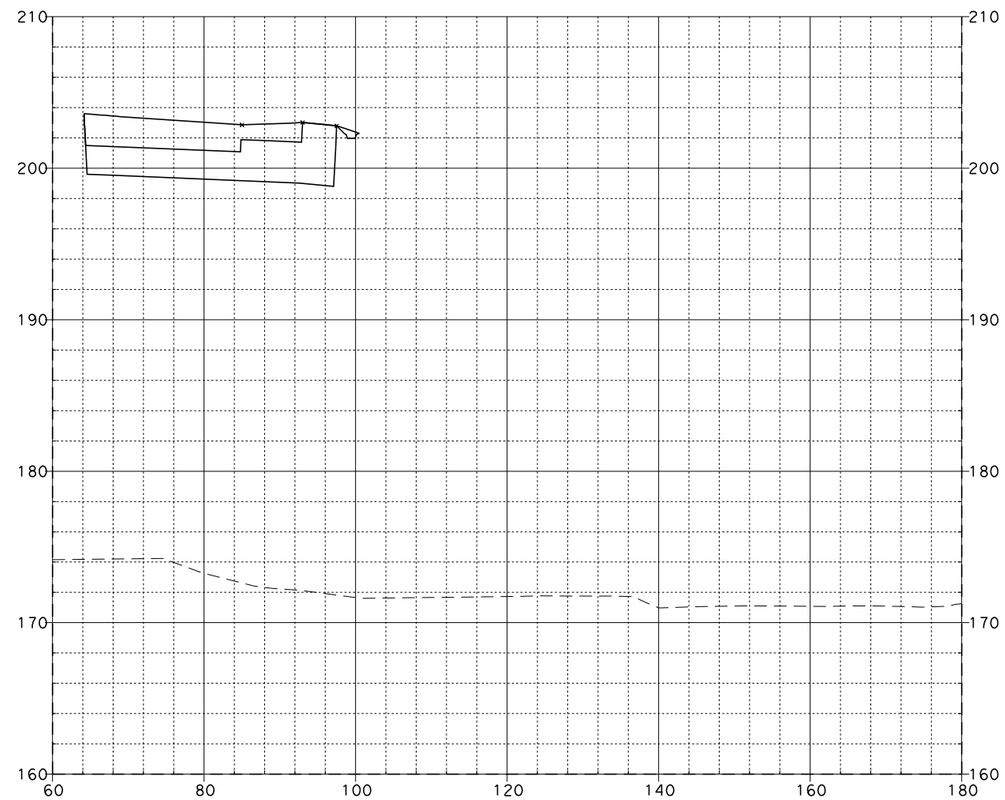

292+00.00

SR-57 MAINLINE

08\03\11

Dist	COUNTY	ROUTE	POST MILES TOTAL PROJECT	SHEET No.	TOTAL SHEETS
12	Ora	57	12.2/15.2		

FOR EARTHWORK DEVELOPMENT ONLY

...\d0282599\Cross_Sections.dgn

EA 0F0401

SCALE: Horiz 1"=20'
Vert 1"=10'

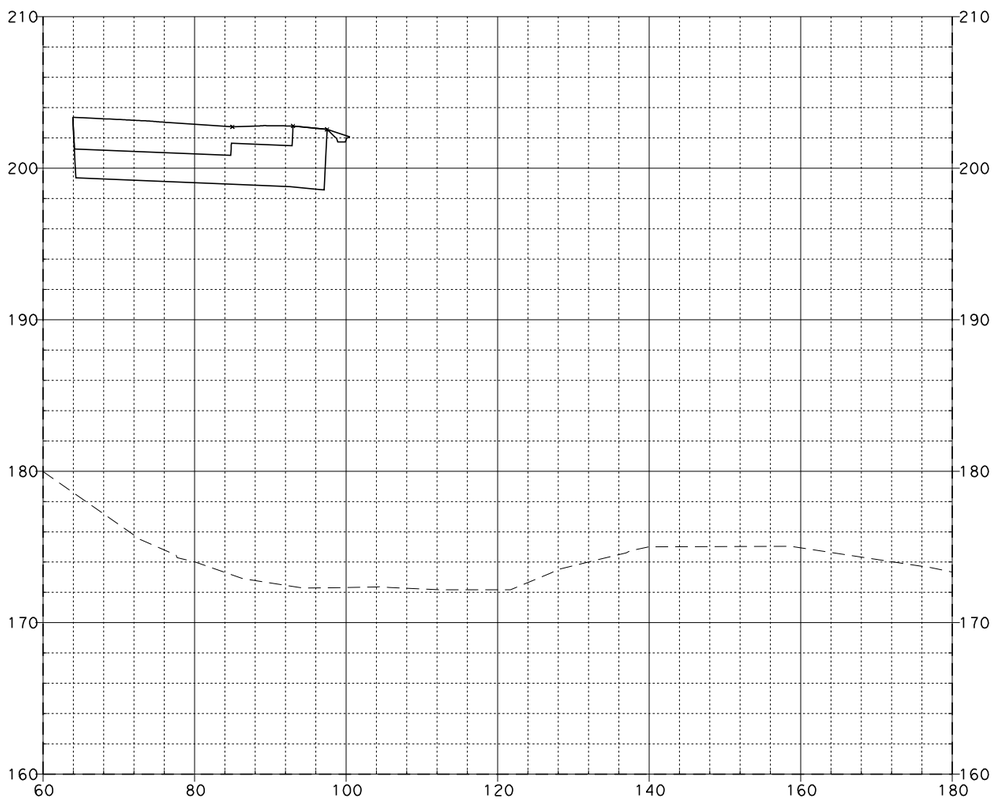

292+43.07

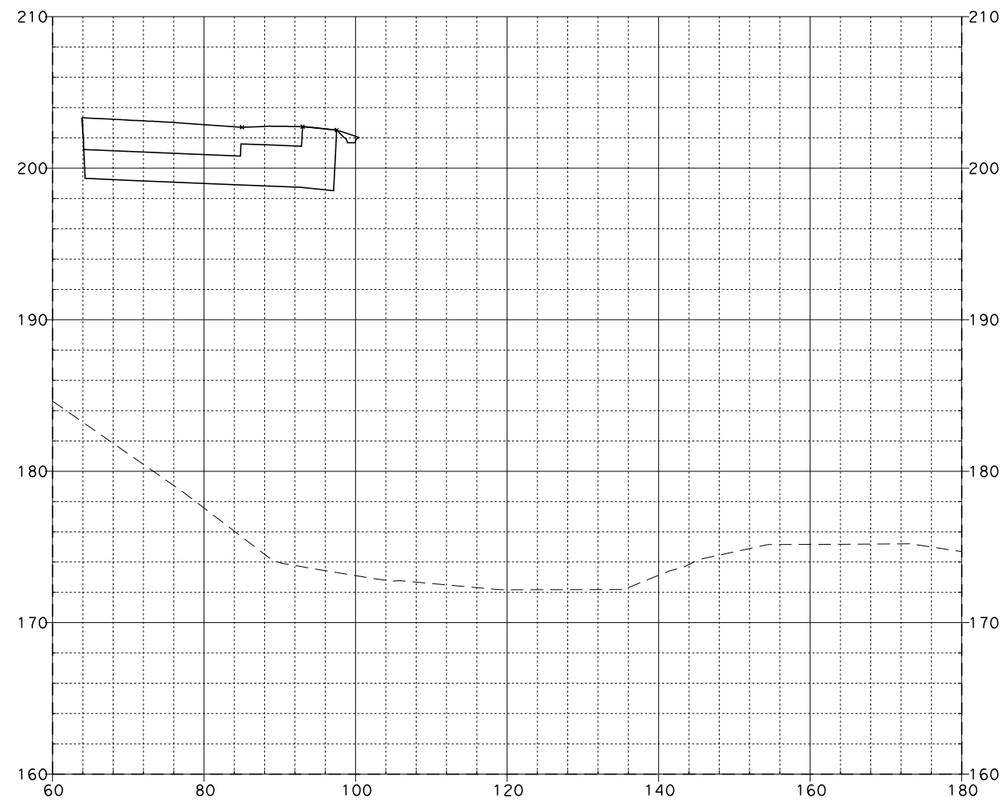

292+50.00

SR-57 MAINLINE

08\03\11

Dist	COUNTY	ROUTE	POST MILES TOTAL PROJECT	SHEET No.	TOTAL SHEETS
12	Ora	57	12.2/15.2		

FOR EARTHWORK DEVELOPMENT ONLY

...\d0282599\Cross_Sections.dgn

EA 0F0401

SCALE: Horiz 1"=20'
Vert 1"=10'

293+00.00

293+13.94

SR-57 MAINLINE

08\03\11

Dist	COUNTY	ROUTE	POST MILES TOTAL PROJECT	SHEET No.	TOTAL SHEETS
12	Ora	57	12.2/15.2		

FOR EARTHWORK DEVELOPMENT ONLY

...\d0282599\Cross_Sections.dgn

EA 0F0401

SCALE: Horiz 1"=20'
Vert 1"=10'

293+25.68

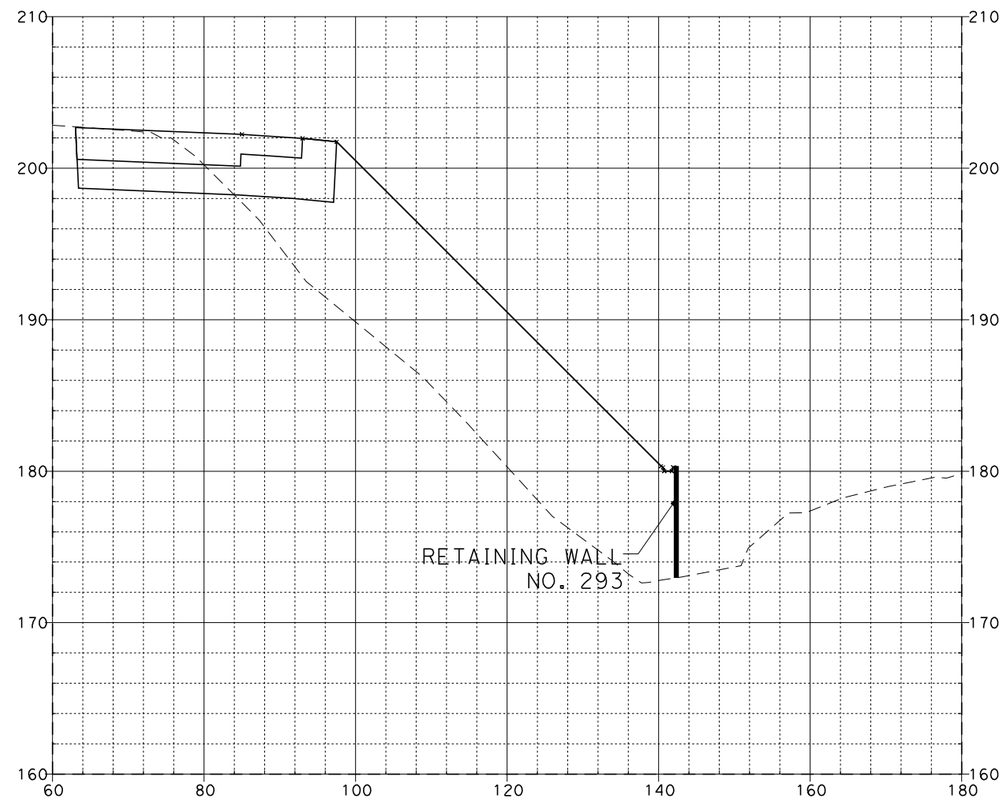

293+50.00

SR-57 MAINLINE

08\03\11

Dist	COUNTY	ROUTE	POST MILES TOTAL PROJECT	SHEET No.	TOTAL SHEETS
12	Ora	57	12.2/15.2		

FOR EARTHWORK DEVELOPMENT ONLY

...\d0282599\Cross_Sections.dgn

EA 0F0401

SCALE: Horiz 1"=20'
Vert 1"=10'

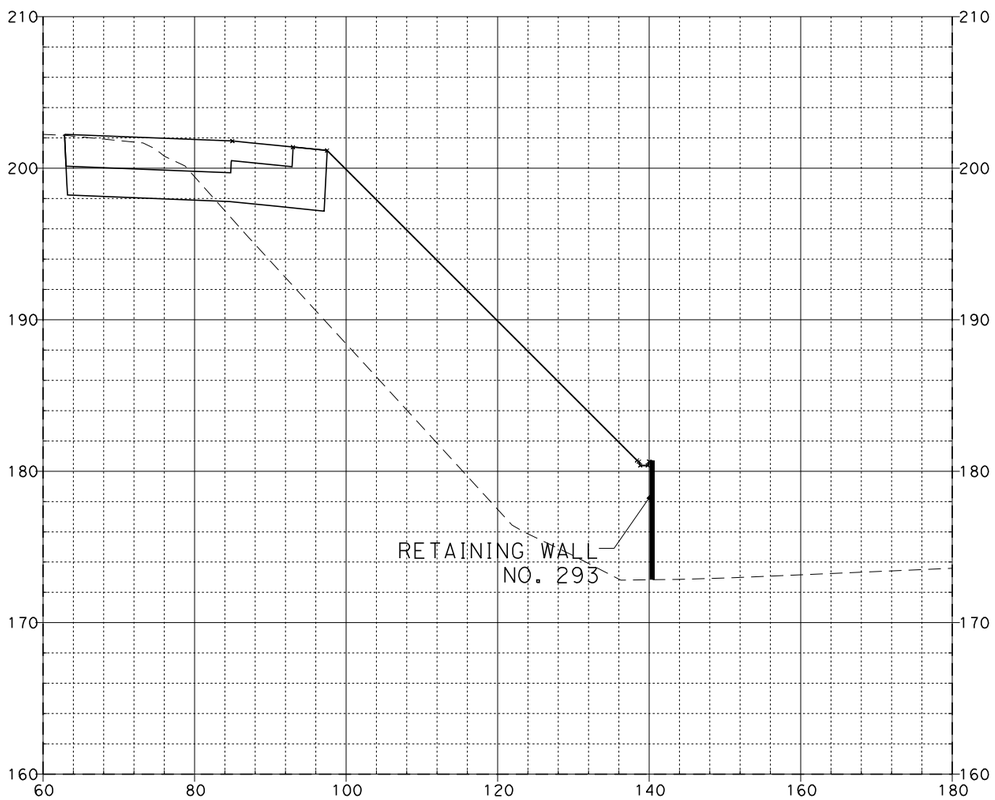

294+00.00

SR-57 MAINLINE

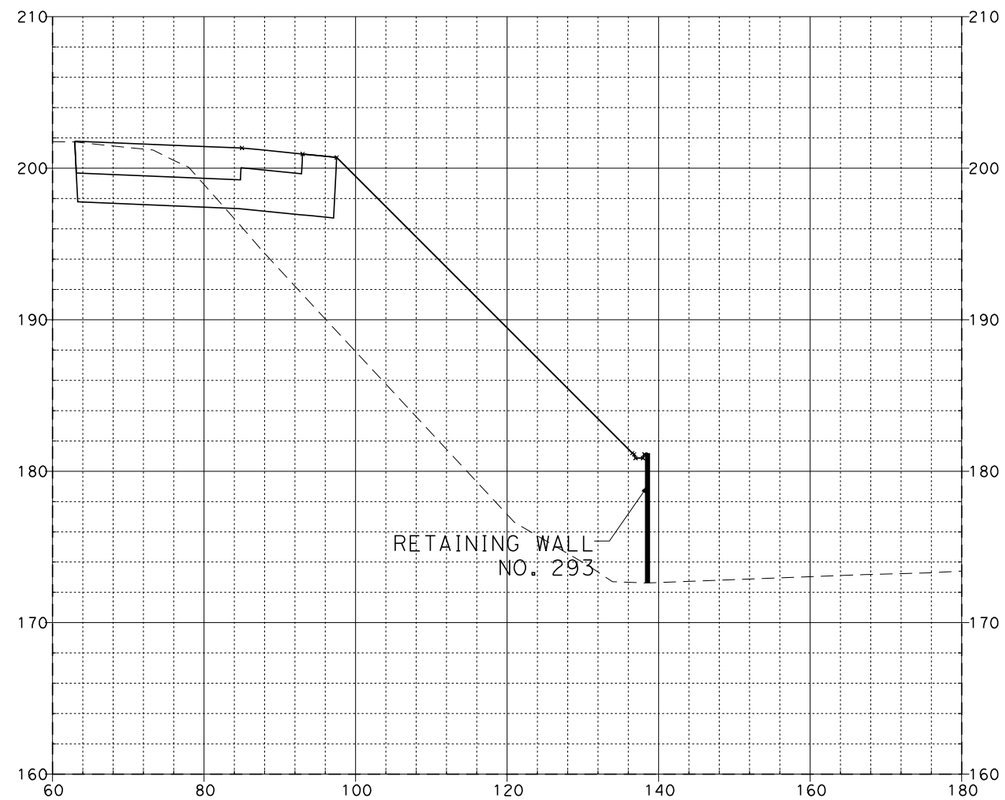

294+50.00

08\03\11

Dist	COUNTY	ROUTE	POST MILES TOTAL PROJECT	SHEET No.	TOTAL SHEETS
12	Ora	57	12.2/15.2		

FOR EARTHWORK DEVELOPMENT ONLY

...\d0282599\Cross_Sections.dgn

EA 0F0401

SCALE: Horiz 1"=20'
Vert 1"=10'

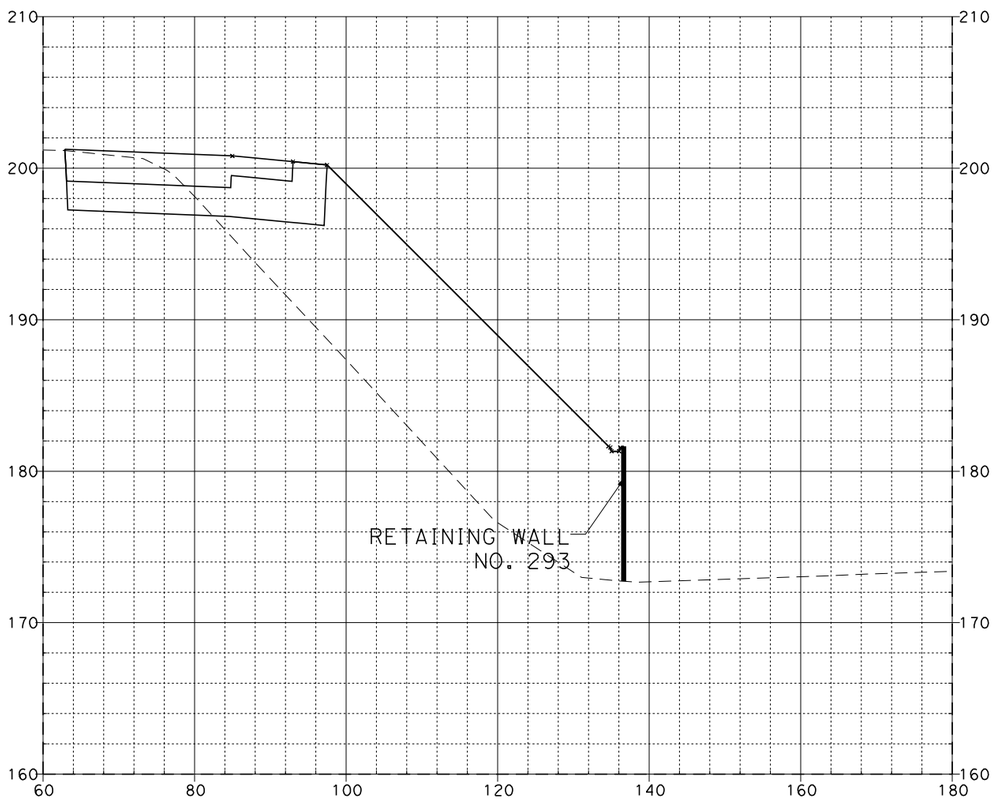

295+00.00

295+50.00

SR-57 MAINLINE

08\03\11

Dist	COUNTY	ROUTE	POST MILES TOTAL PROJECT	SHEET No.	TOTAL SHEETS
12	Ora	57	12.2/15.2		

FOR EARTHWORK DEVELOPMENT ONLY

...\d0282599\Cross_Sections.dgn

EA 0F0401

SCALE: Horiz 1"=20'
Vert 1"=10'

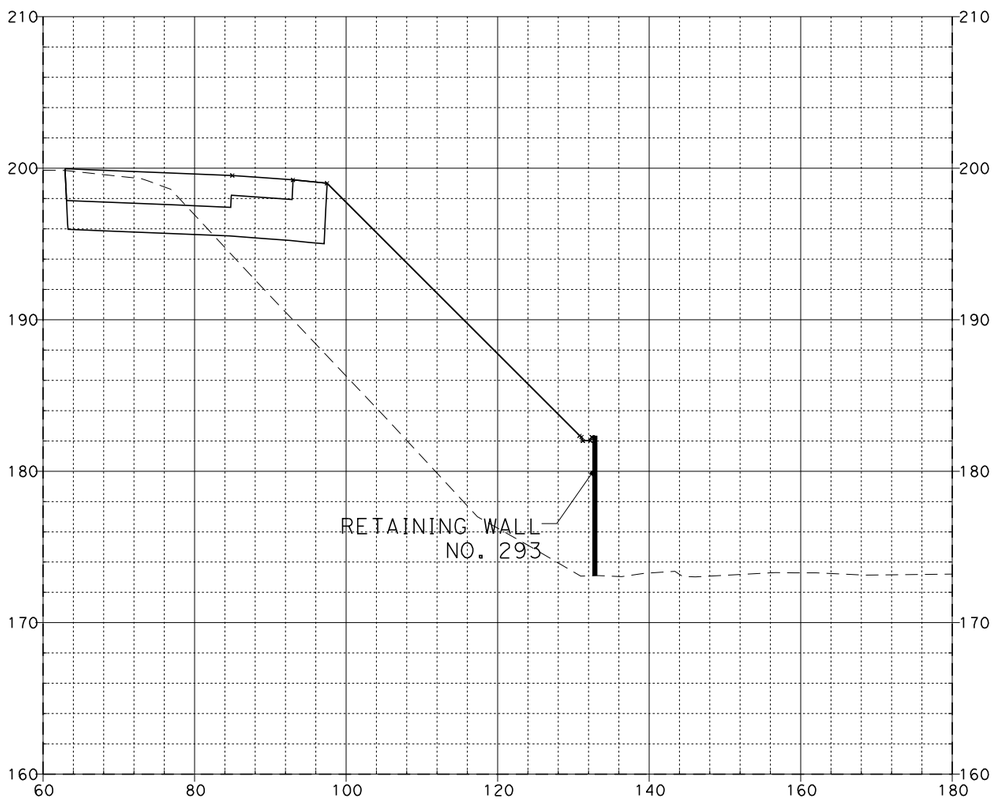

296+00.00

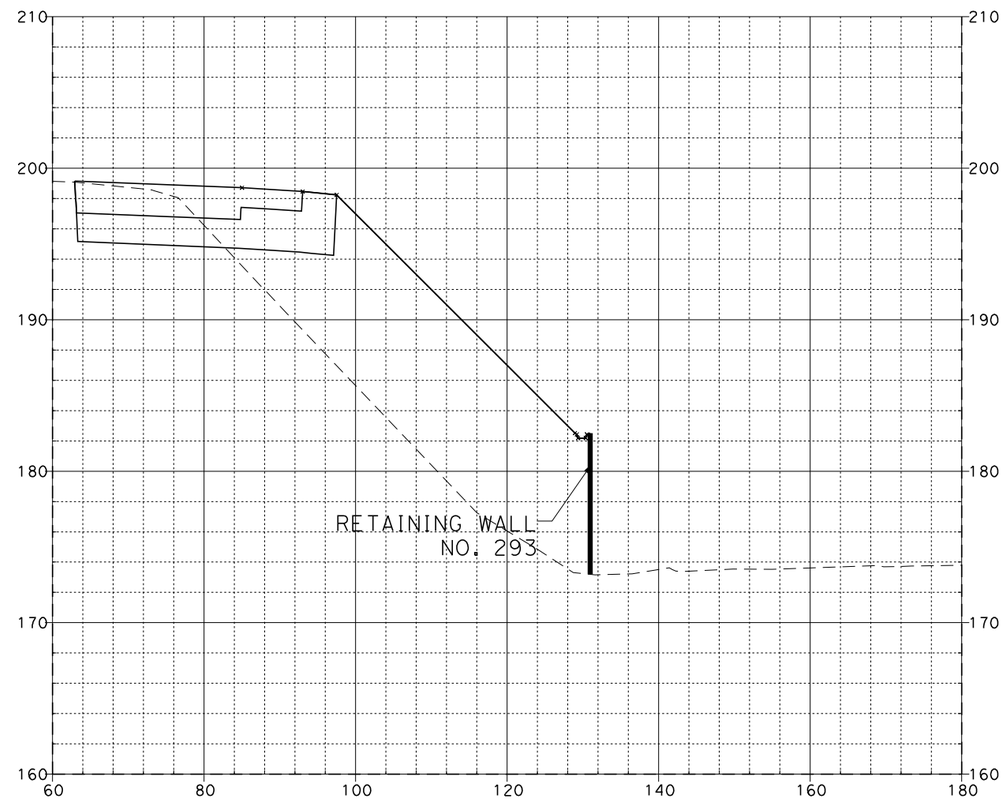

296+50.00

SR-57 MAINLINE

08\03\11

Dist	COUNTY	ROUTE	POST MILES TOTAL PROJECT	SHEET No.	TOTAL SHEETS
12	Ora	57	12.2/15.2		

FOR EARTHWORK DEVELOPMENT ONLY

...\d0282599\Cross_Sections.dgn

EA 0F0401

SCALE: Horiz 1"=20'
Vert 1"=10'

297+00.00

297+50.00

SR-57 MAINLINE

08\03\11

Dist	COUNTY	ROUTE	POST MILES TOTAL PROJECT	SHEET No.	TOTAL SHEETS
12	Ora	57	12.2/15.2		

FOR EARTHWORK DEVELOPMENT ONLY

...\d0282599\Cross_Sections.dgn

EA 0F0401

SCALE: Horiz 1"=20'
Vert 1"=10'

297+53.57

298+00.00

SR-57 MAINLINE

08\03\11

Dist	COUNTY	ROUTE	POST MILES TOTAL PROJECT	SHEET No.	TOTAL SHEETS
12	Ora	57	12.2/15.2		

FOR EARTHWORK DEVELOPMENT ONLY

...\d0282599\Cross_Sections.dgn

EA 0F0401

SCALE: Horiz 1"=20'
Vert 1"=10'

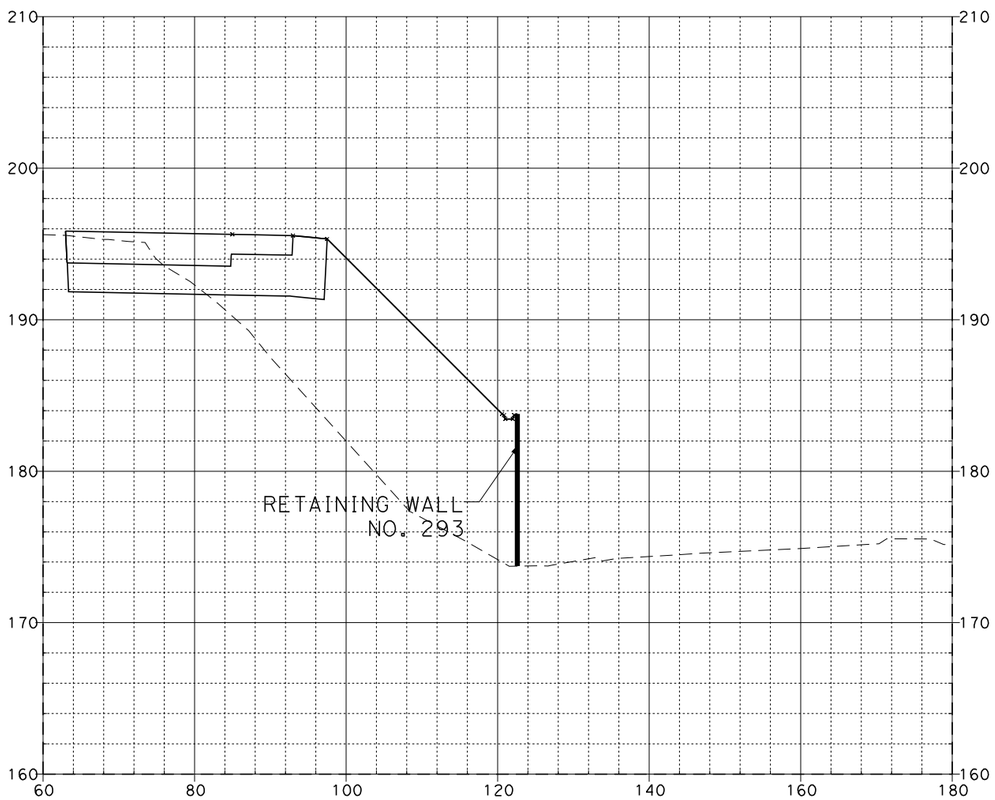

298+50.00

299+00.00

SR-57 MAINLINE

08\03\11

Dist	COUNTY	ROUTE	POST MILES TOTAL PROJECT	SHEET No.	TOTAL SHEETS
12	Ora	57	12.2/15.2		

FOR EARTHWORK DEVELOPMENT ONLY

...\d0282599\Cross_Sections.dgn

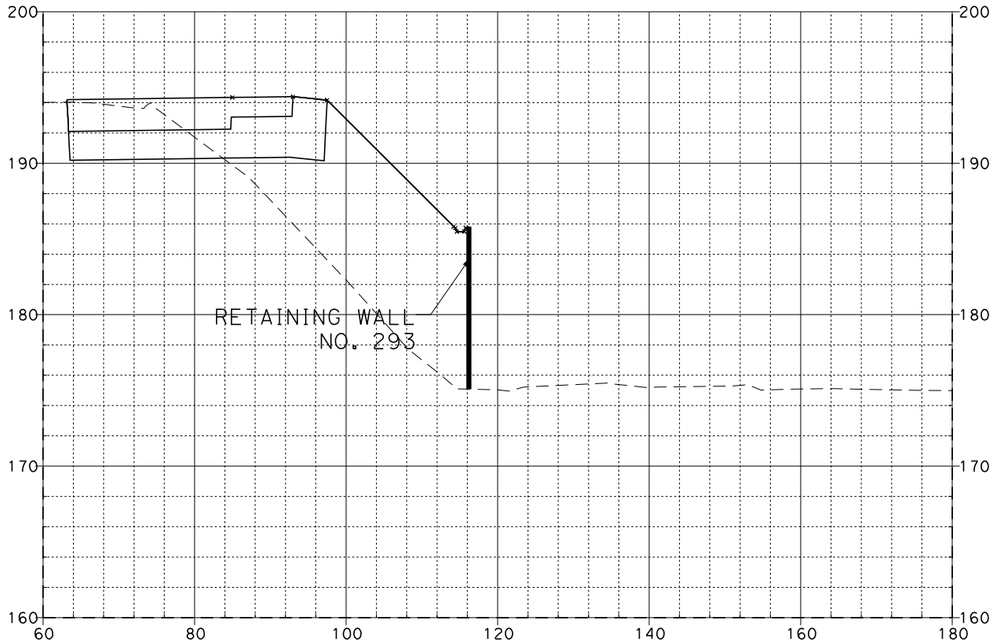

300+00.00

300+50.00

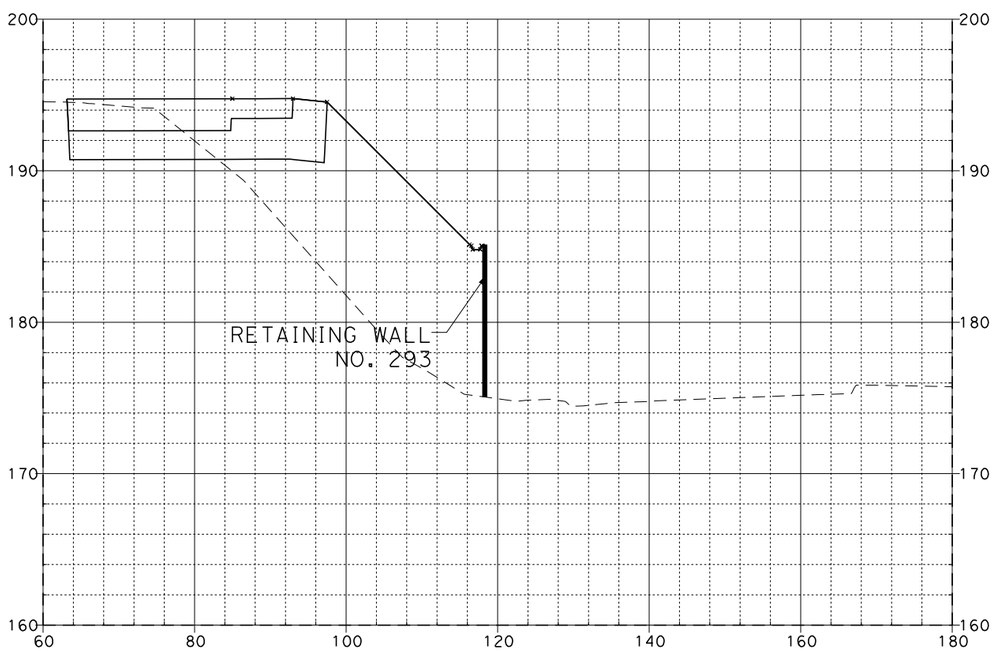

299+50.00

300+36.44

SR-57 MAINLINE

EA 0F0401

SCALE: Horiz 1"=20'
Vert 1"=10'

08\03\11

Dist	COUNTY	ROUTE	POST MILES TOTAL PROJECT	SHEET No.	TOTAL SHEETS
12	Ora	57	12.2/15.2		

FOR EARTHWORK DEVELOPMENT ONLY

...\d0282599\Cross_Sections.dgn

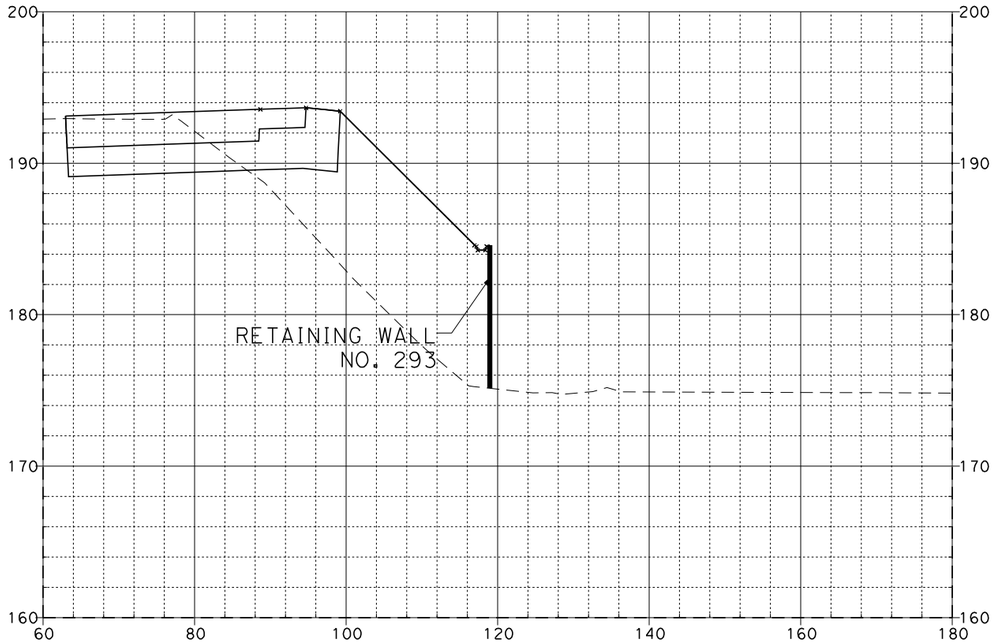

301+00.00

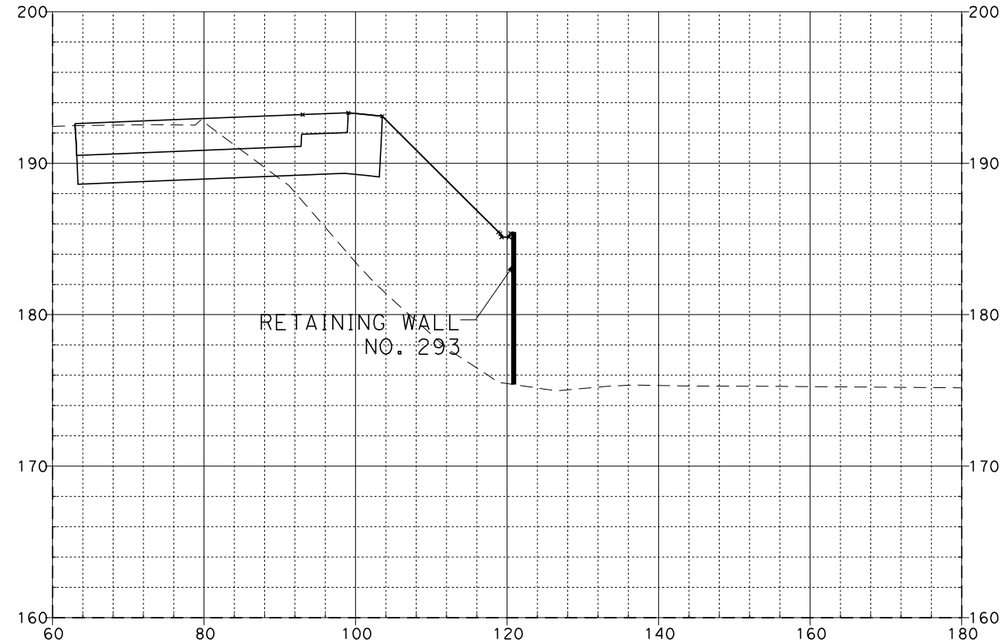

301+50.00

300+57.05

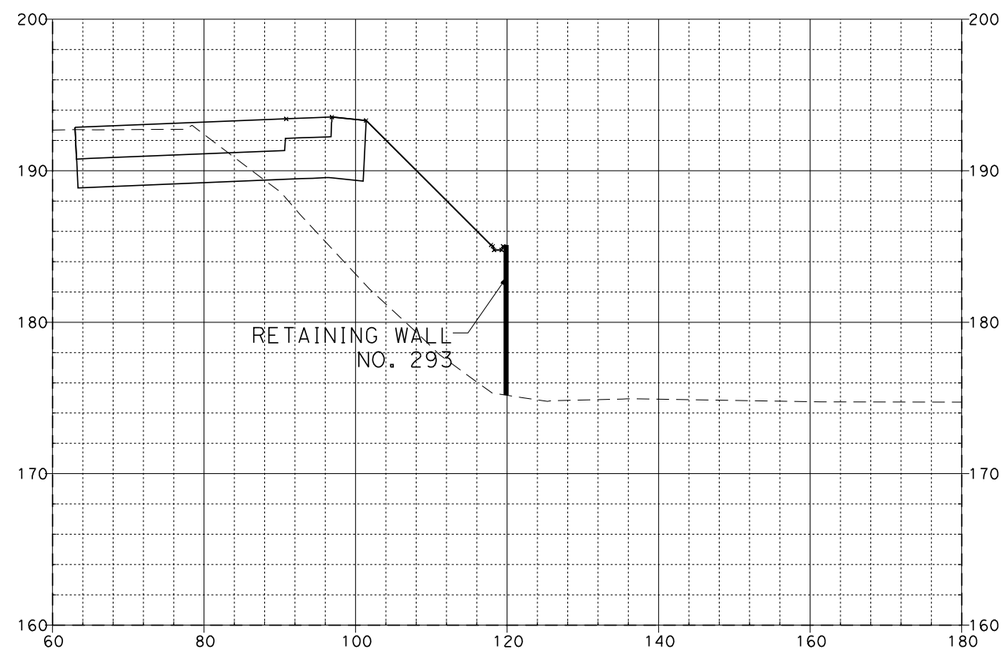

301+25.00

SR-57 MAINLINE

EA 0F0401

SCALE: Horiz 1"=20'
Vert 1"=10'

08\03\11

Dist	COUNTY	ROUTE	POST MILES TOTAL PROJECT	SHEET No.	TOTAL SHEETS
12	Ora	57	12.2/15.2		

FOR EARTHWORK DEVELOPMENT ONLY

...\d0282599\Cross_Sections.dgn

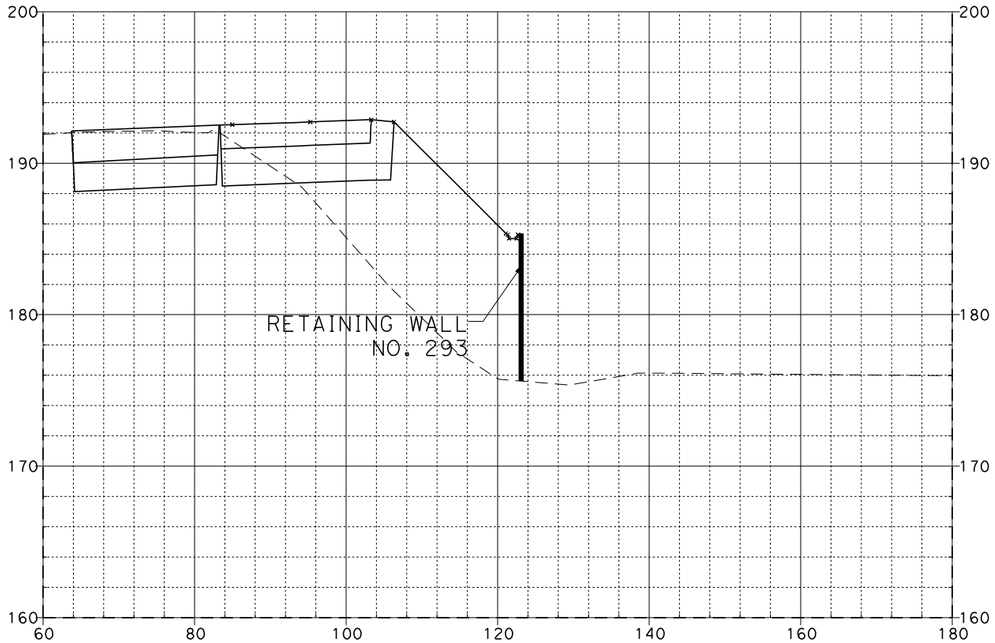

302+00.00

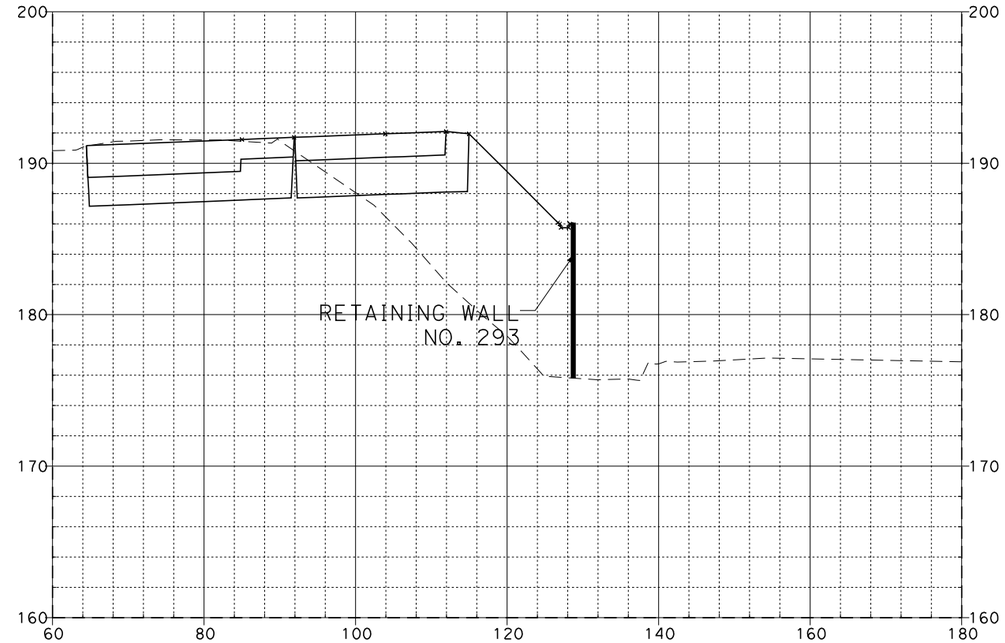

303+00.00

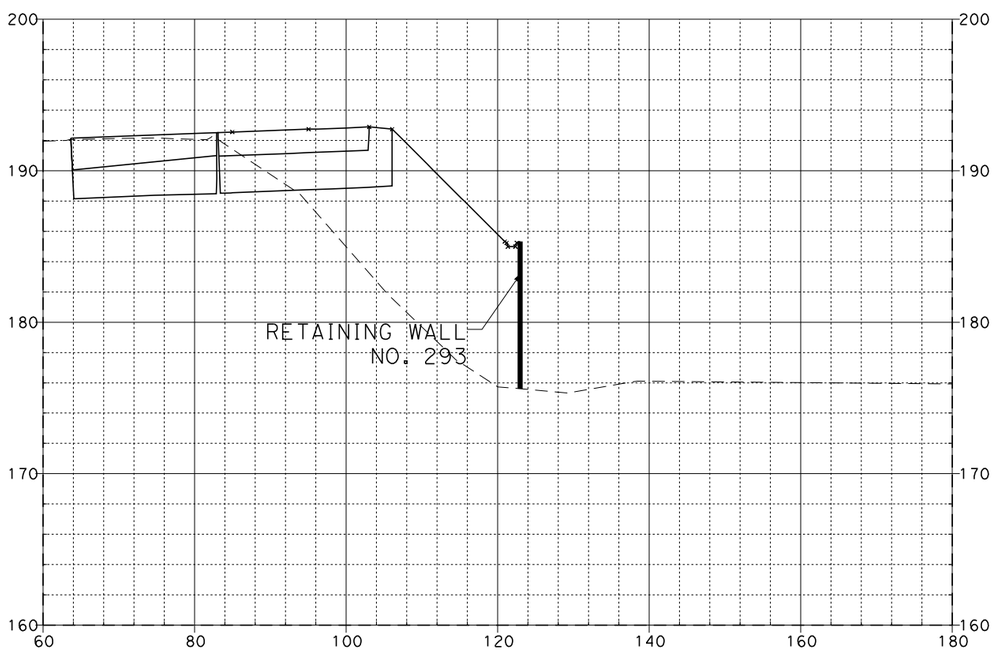

301+97.00

SR-57 MAINLINE

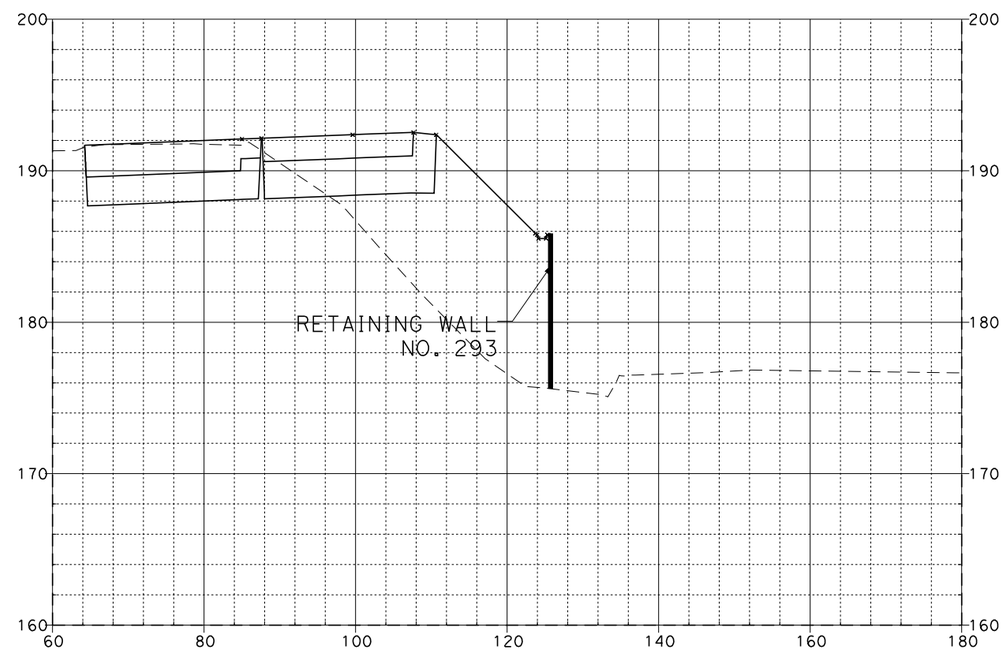

302+50.00

EA 0F0401

SCALE: Horiz 1"=20'
Vert 1"=10'

08\03\11

Dist	COUNTY	ROUTE	POST MILES TOTAL PROJECT	SHEET No.	TOTAL SHEETS
12	Ora	57	12.2/15.2		

FOR EARTHWORK DEVELOPMENT ONLY

...\d0282599\Cross_Sections.dgn

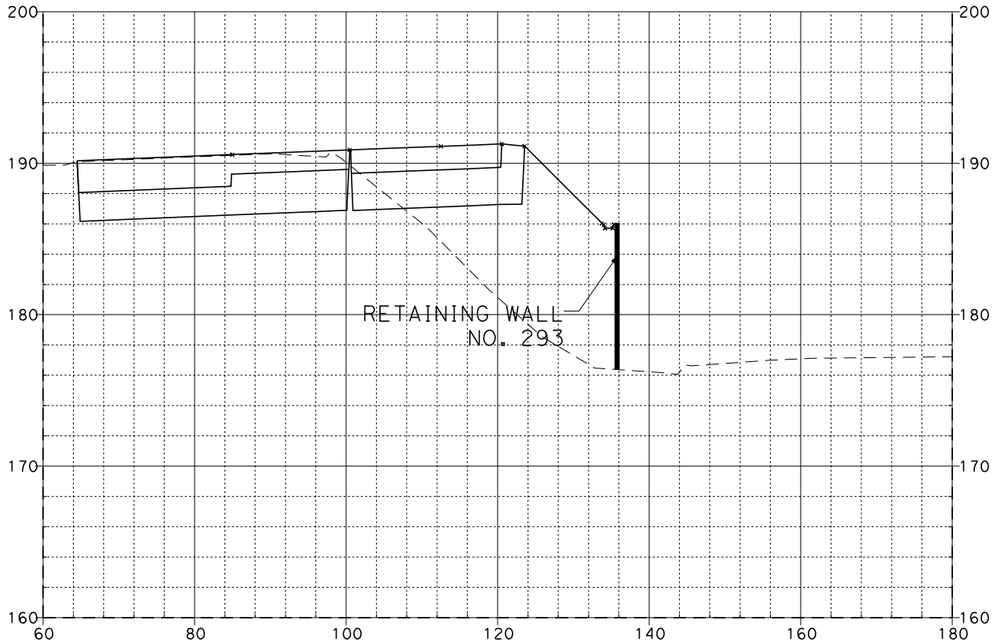

304+00.00

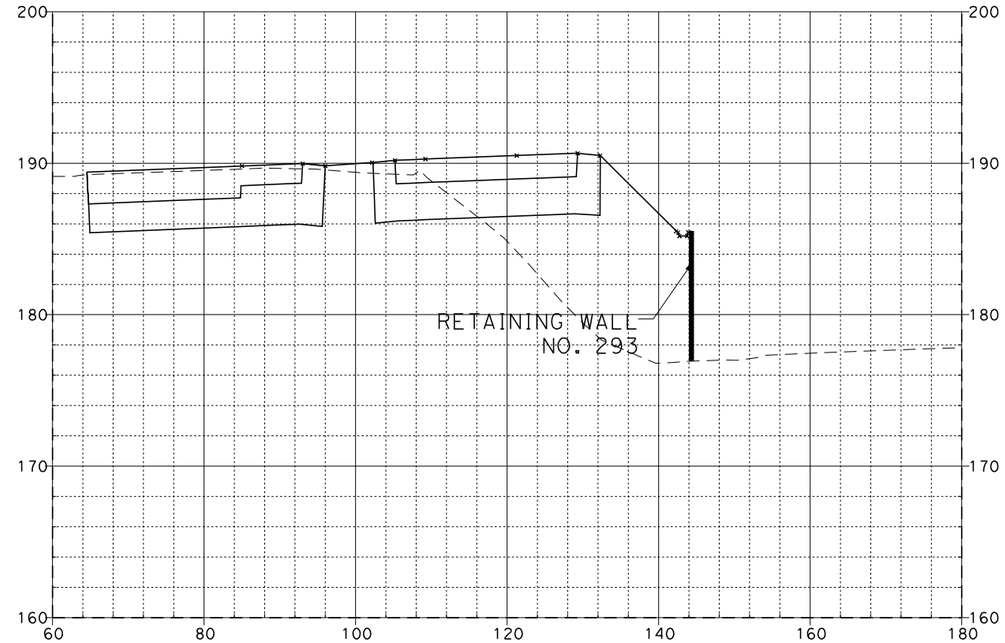

305+00.00

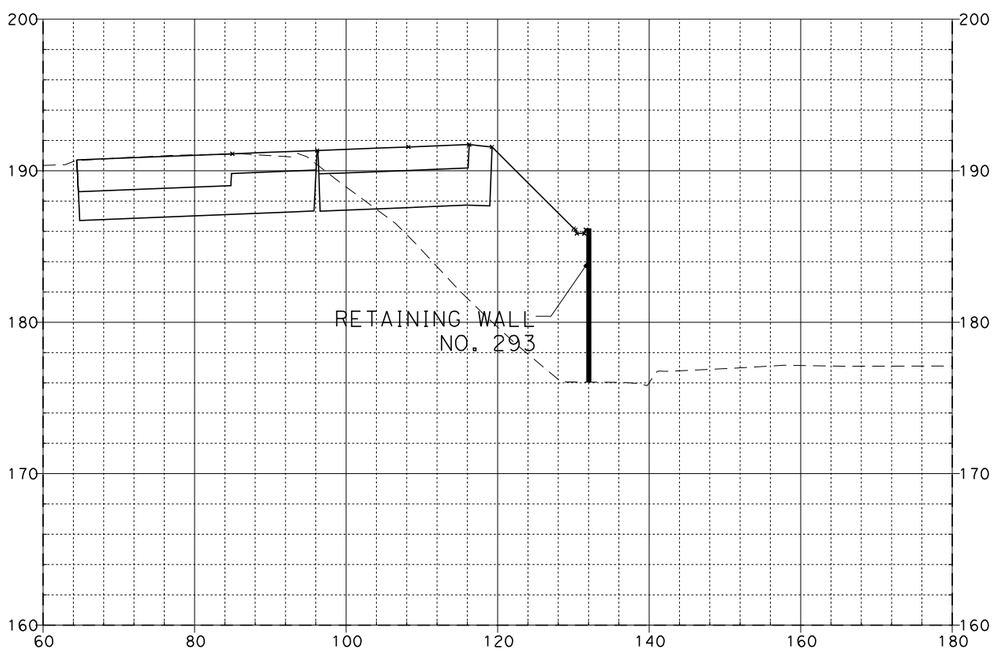

303+50.00

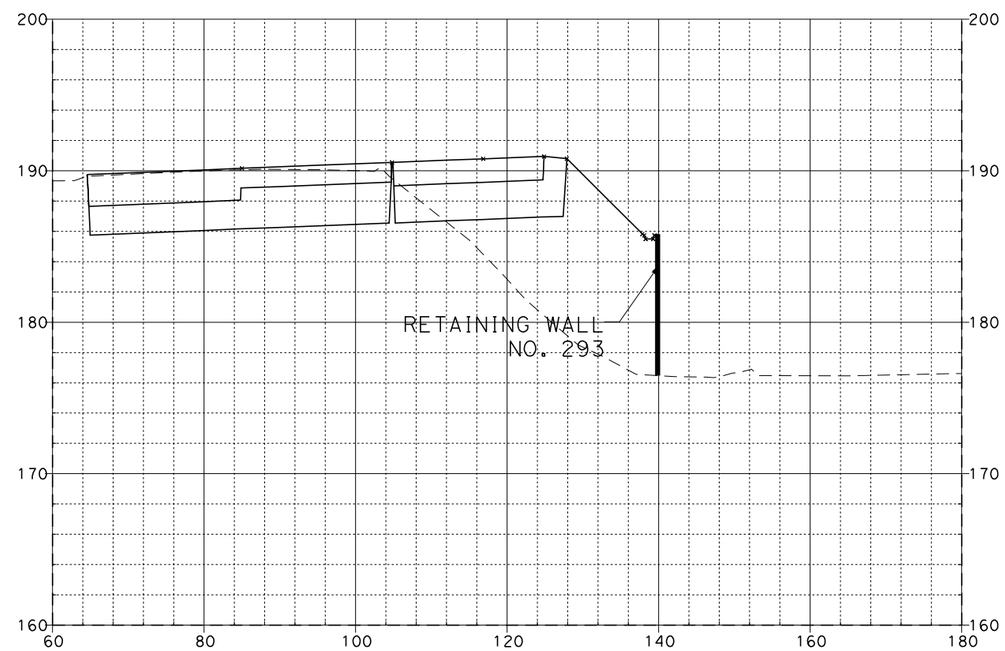

304+50.00

SR-57 MAINLINE

EA 0F0401

SCALE: Horiz 1"=20'
Vert 1"=10'

08\03\11

Dist	COUNTY	ROUTE	POST MILES TOTAL PROJECT	SHEET No.	TOTAL SHEETS
12	Ora	57	12.2/15.2		

FOR EARTHWORK DEVELOPMENT ONLY

...\d0282599\Cross_Sections.dgn

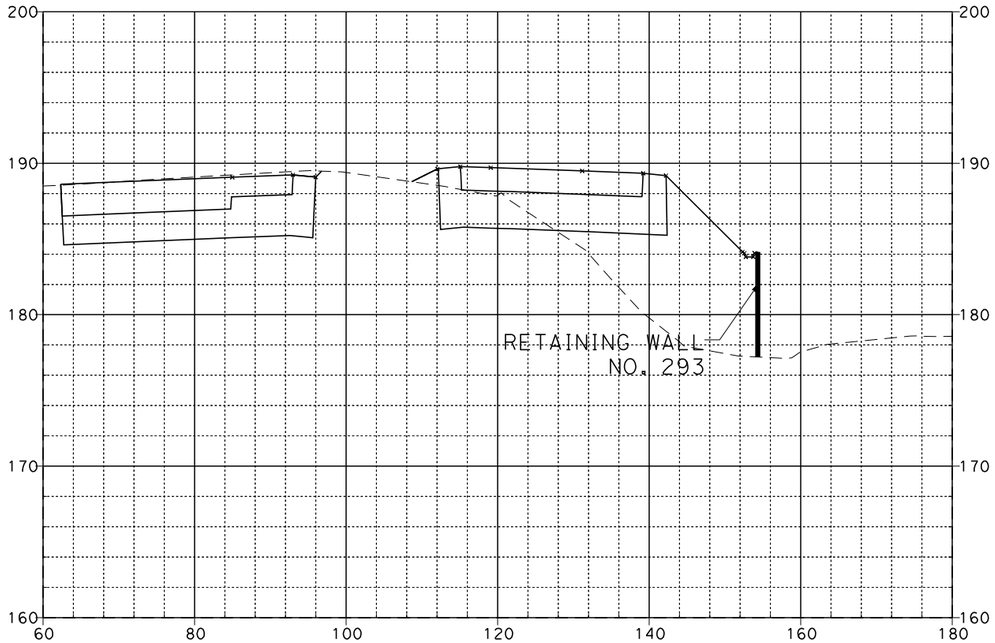

306+00.00

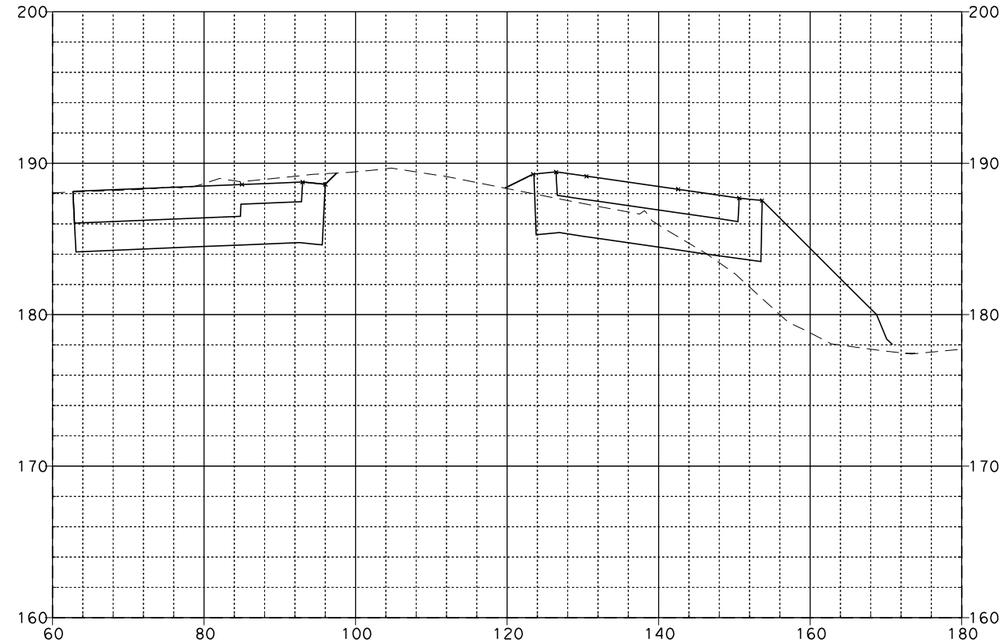

307+00.00

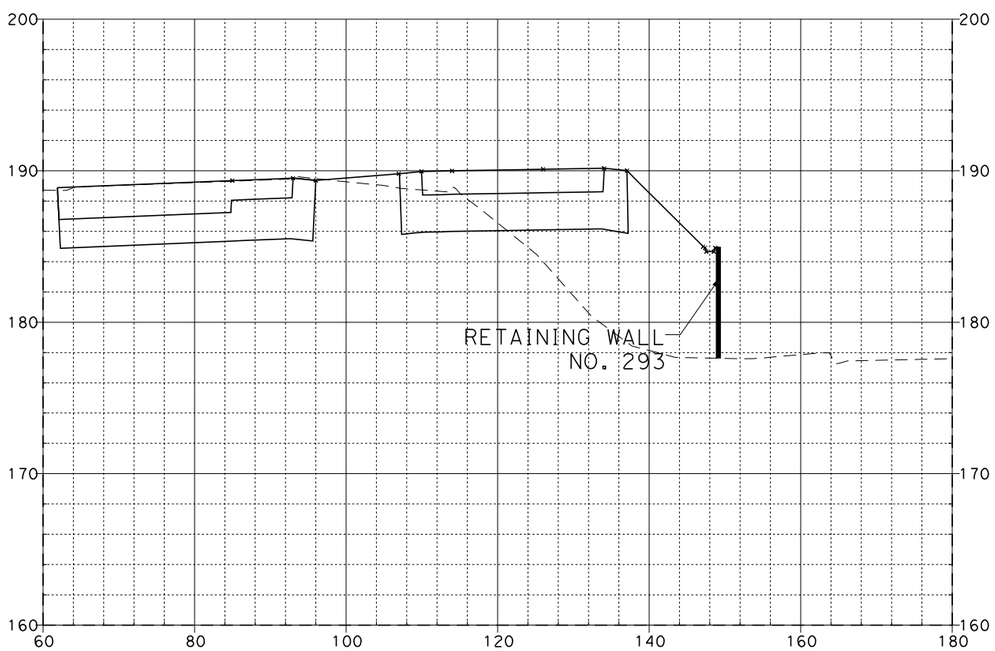

305+50.00

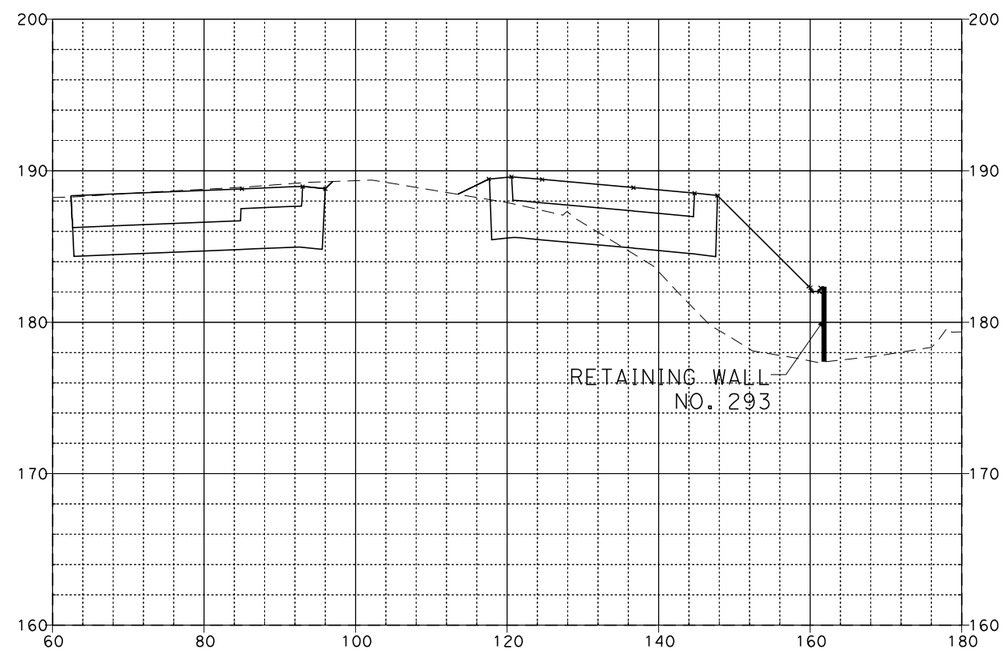

306+50.00

SR-57 MAINLINE

EA 0F0401

SCALE: Horiz 1"=20'
Vert 1"=10'

08\03\11

Dist	COUNTY	ROUTE	POST MILES TOTAL PROJECT	SHEET No.	TOTAL SHEETS
12	Ora	57	12.2/15.2		

FOR EARTHWORK DEVELOPMENT ONLY

...\d0282599\Cross_Sections.dgn

EA 0F0401

SCALE: Horiz 1"=20'
Vert 1"=10'

08\03\11

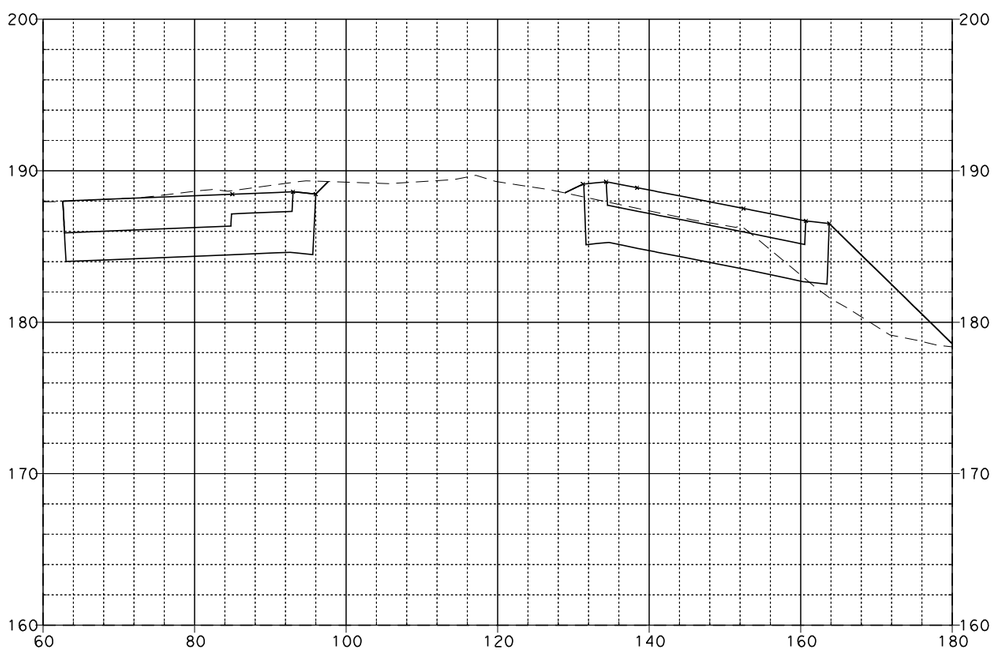

307+50.00

SR-57 MAINLINE

Dist	COUNTY	ROUTE	POST MILES TOTAL PROJECT	SHEET No.	TOTAL SHEETS
12	Ora	57	12.2/15.2		

FOR EARTHWORK DEVELOPMENT ONLY

...\d0282599\Cross_Sections.dgn

EA 0F0401

SCALE: Horiz 1"=20'
Vert 1"=10'

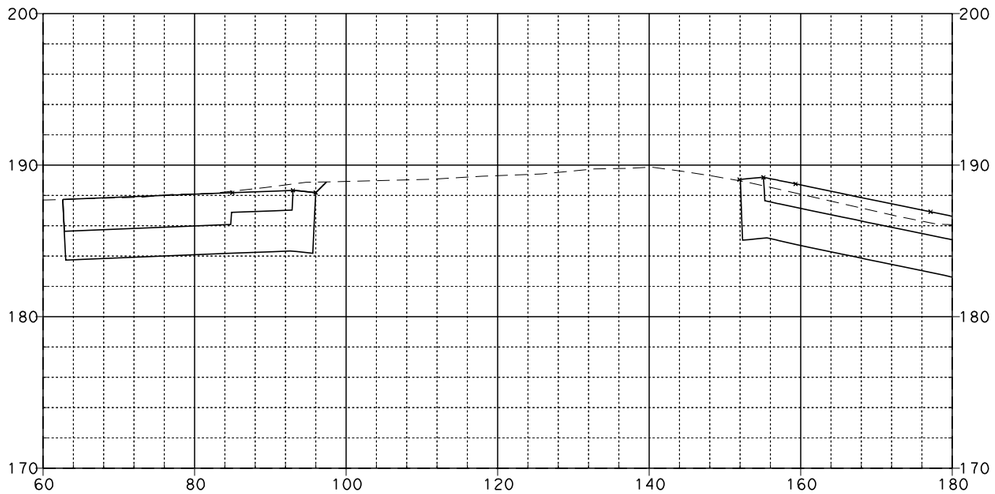

308+25.00

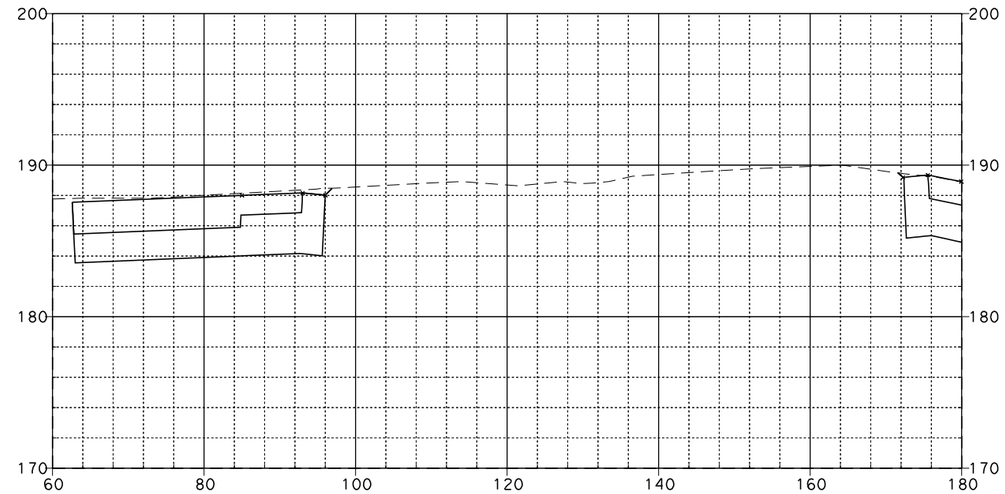

308+75.00

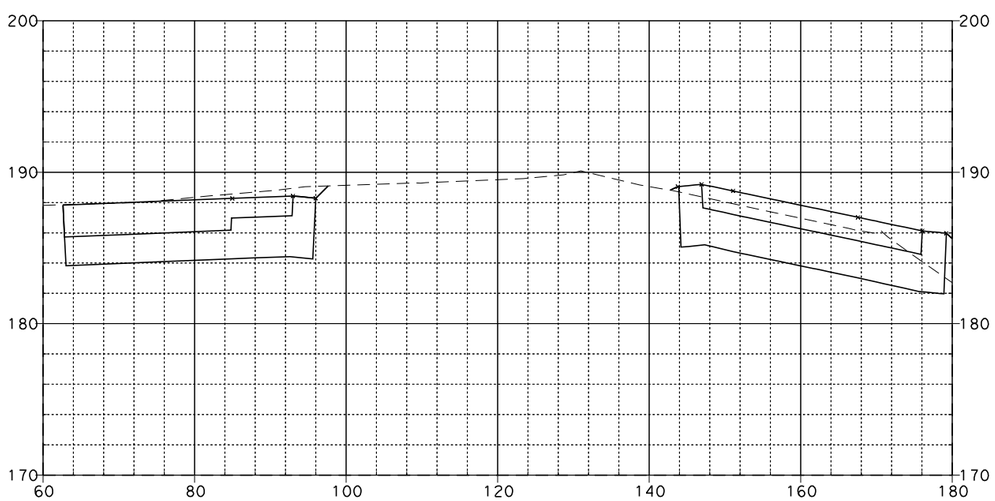

308+00.00

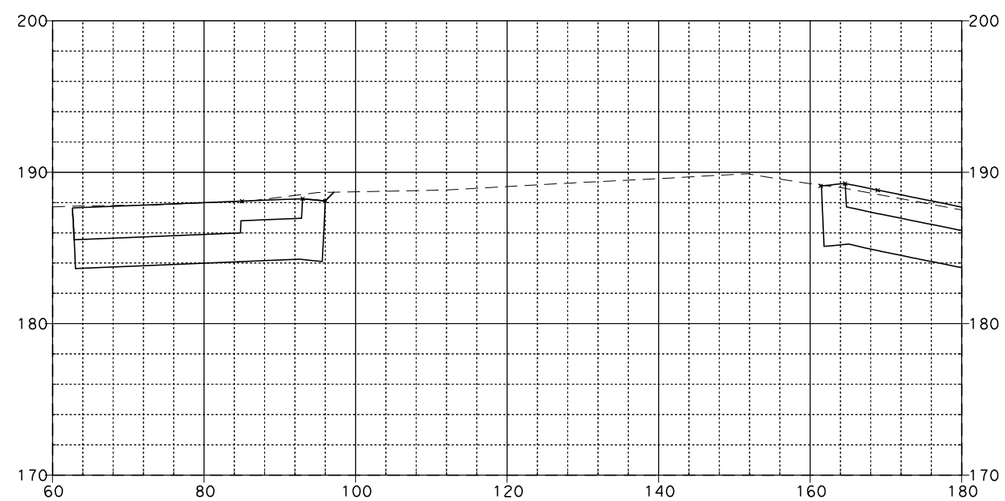

308+50.00

SR-57 MAINLINE

08\03\11

Dist	COUNTY	ROUTE	POST MILES TOTAL PROJECT	SHEET NO.	TOTAL SHEETS
12	Ora	57	12.2/15.2		

FOR EARTHWORK DEVELOPMENT ONLY

...\d0282599\Cross_Sections.dgn

EA 0F0401

SCALE: Horiz 1"=20'
Vert 1"=10'

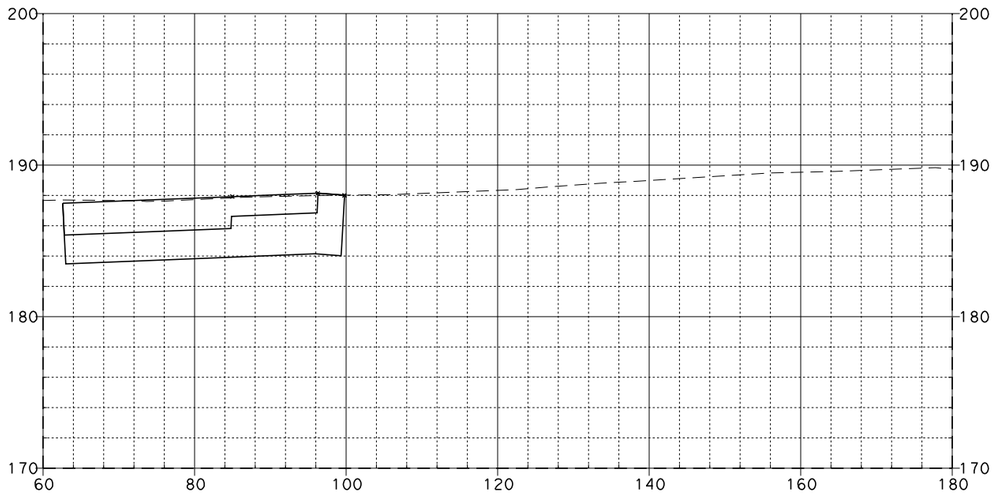

309+00.00

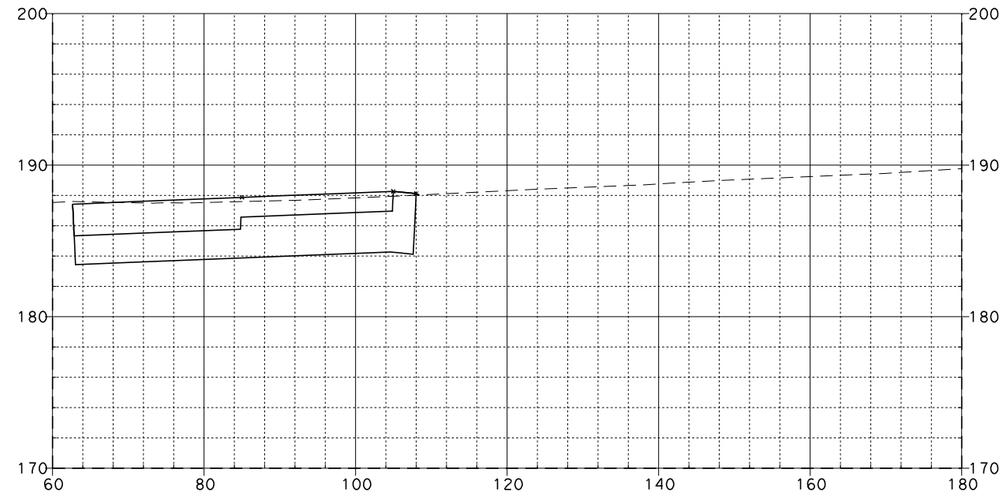

309+25.00

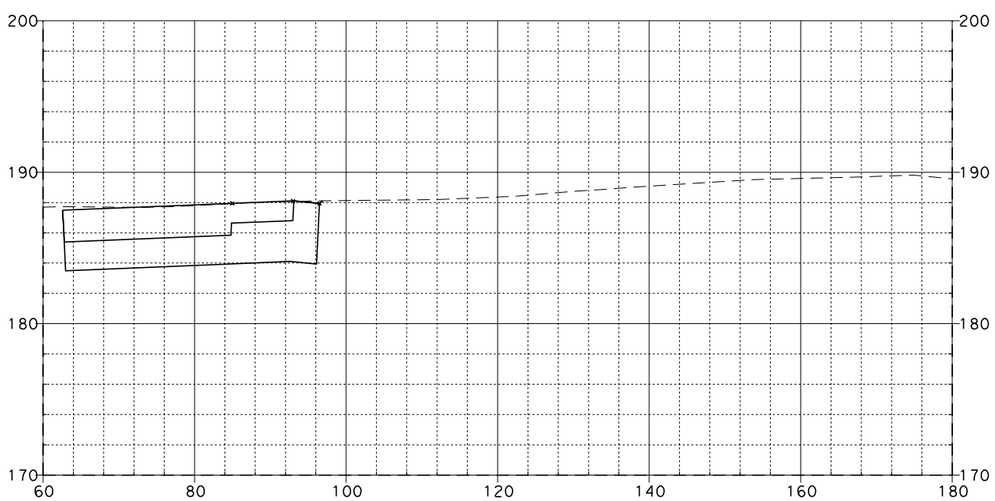

308+94.57

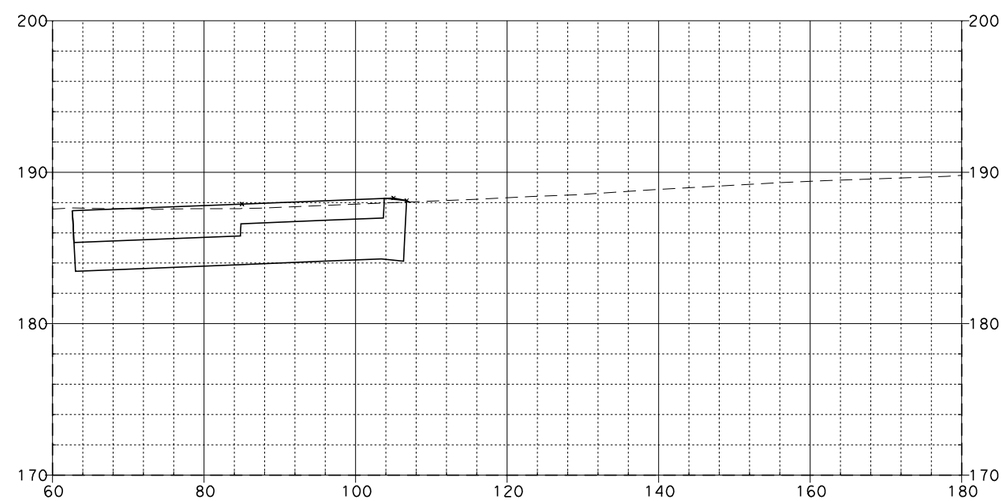

309+14.27

SR-57 MAINLINE

08\03\11

Dist	COUNTY	ROUTE	POST MILES TOTAL PROJECT	SHEET NO.	TOTAL SHEETS
12	Ora	57	12.2/15.2		

FOR EARTHWORK DEVELOPMENT ONLY

...\d0282599\Cross_Sections.dgn

EA 0F0401

SCALE: Horiz 1"=20'
Vert 1"=10'

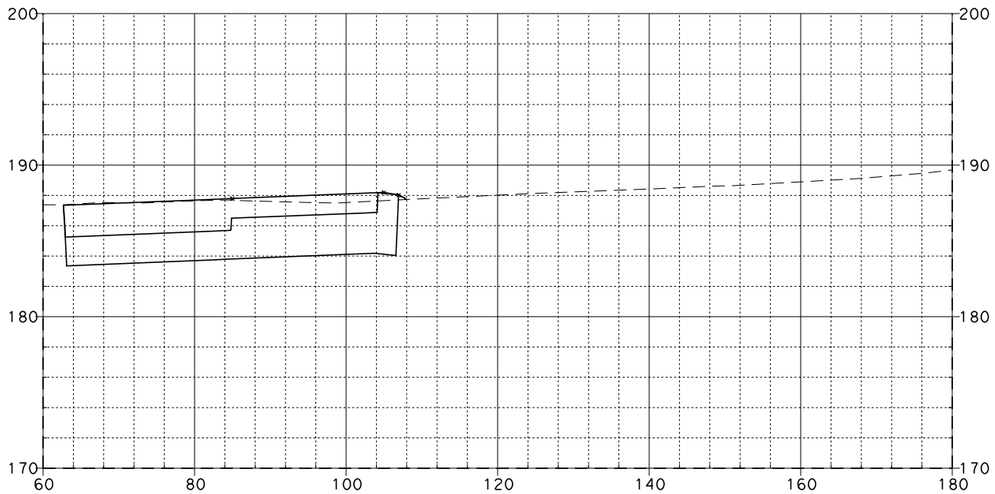

309+58.61

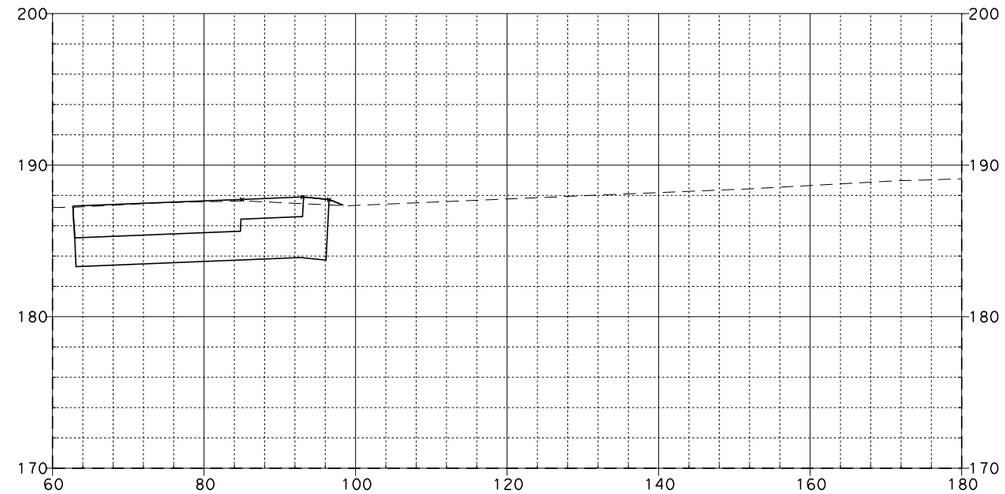

309+78.31

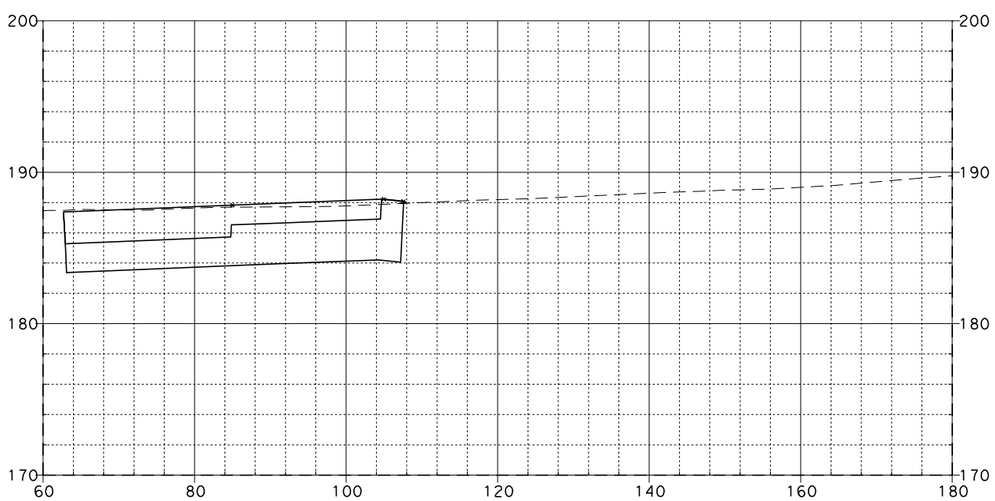

309+50.00

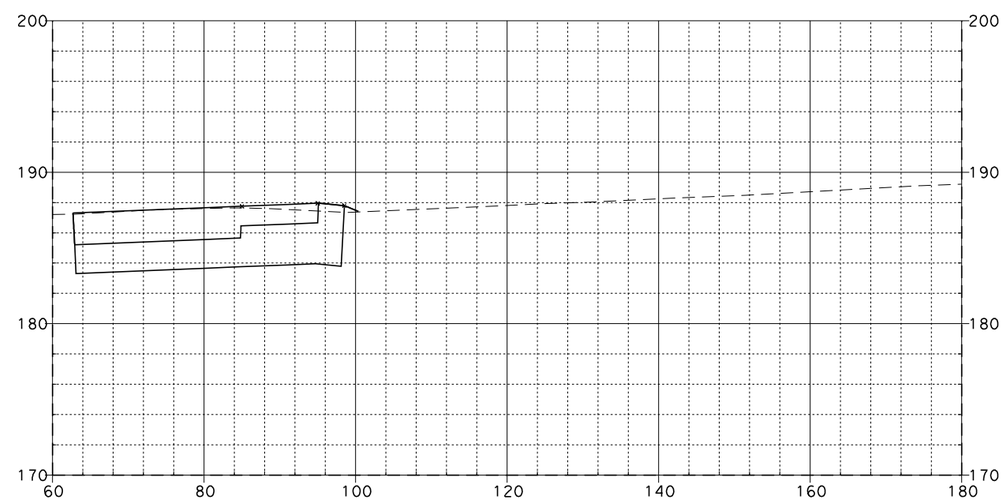

309+75.00

SR-57 MAINLINE

08\03\11

Dist	COUNTY	ROUTE	POST MILES TOTAL PROJECT	SHEET NO.	TOTAL SHEETS
12	Ora	57	12.2/15.2		

FOR EARTHWORK DEVELOPMENT ONLY

...\d0282599\Cross_Sections.dgn

EA 0F0401

SCALE: Horiz 1"=20'
Vert 1"=10'

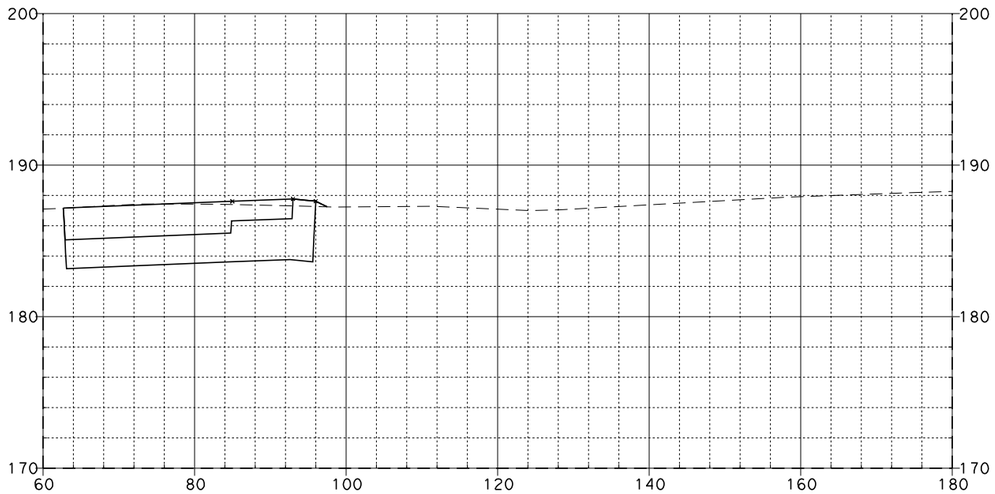

310+25.00

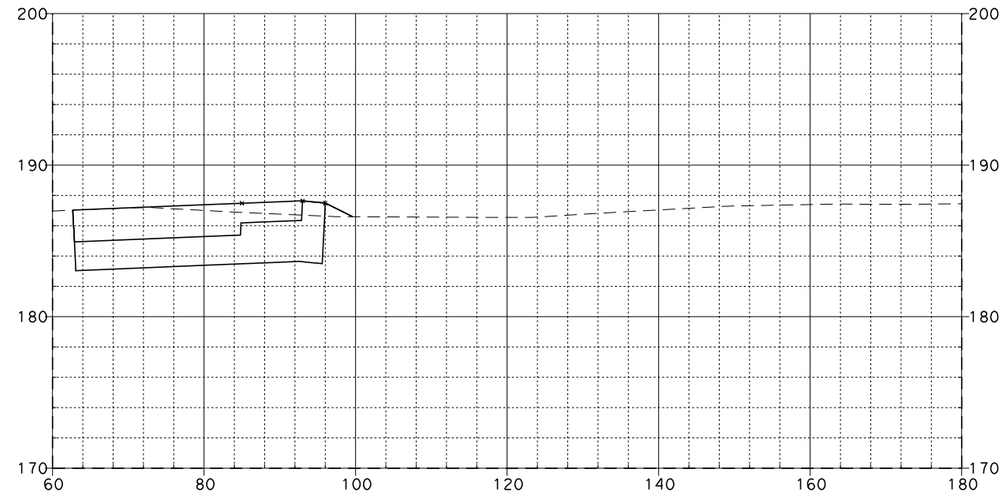

310+75.00

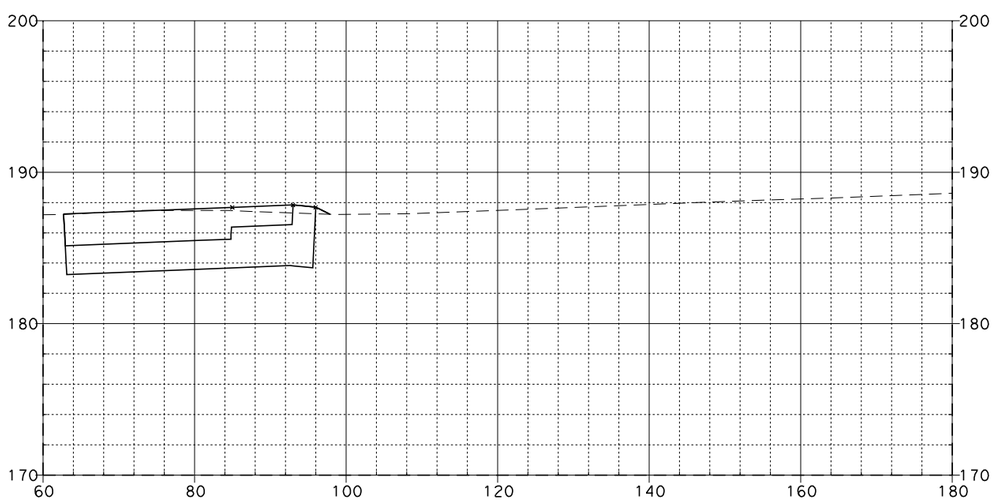

310+00.00

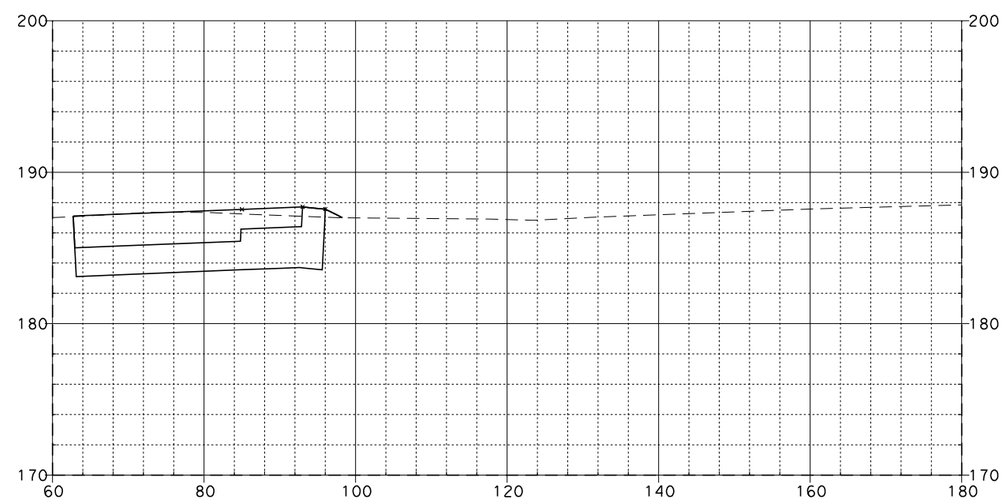

310+50.00

SR-57 MAINLINE

08\03\11

Dist	COUNTY	ROUTE	POST MILES TOTAL PROJECT	SHEET NO.	TOTAL SHEETS
12	Ora	57	12.2/15.2		

FOR EARTHWORK DEVELOPMENT ONLY

...\d0282599\Cross_Sections.dgn

EA 0F0401

SCALE: Horiz 1"=20'
Vert 1"=10'

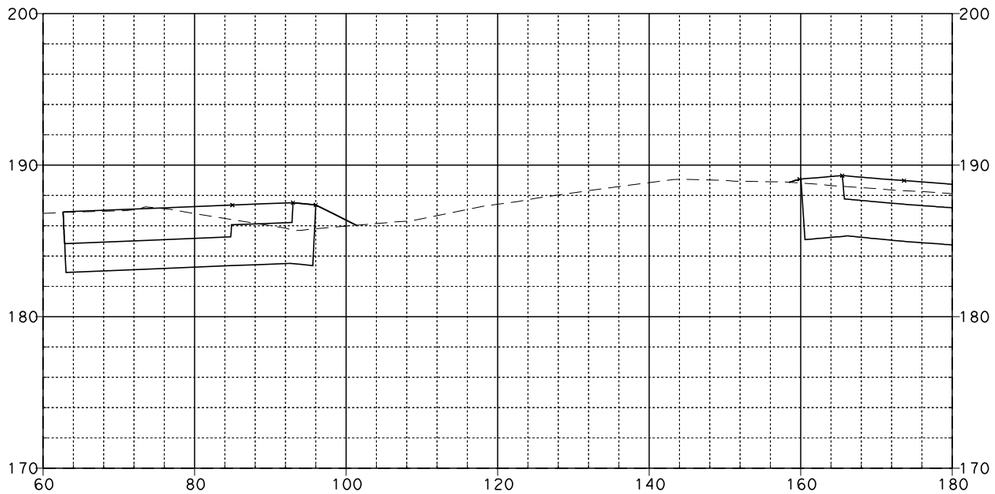

311+25.00

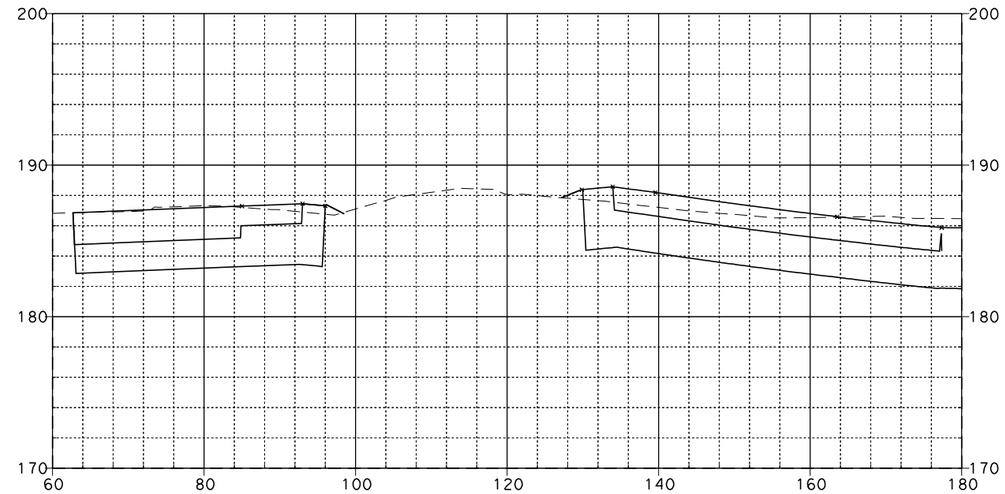

311+50.00

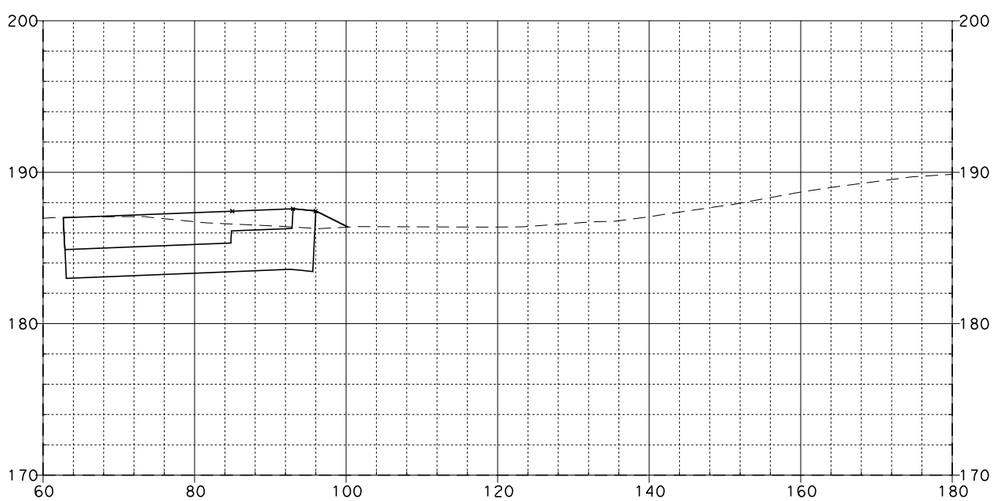

311+00.00

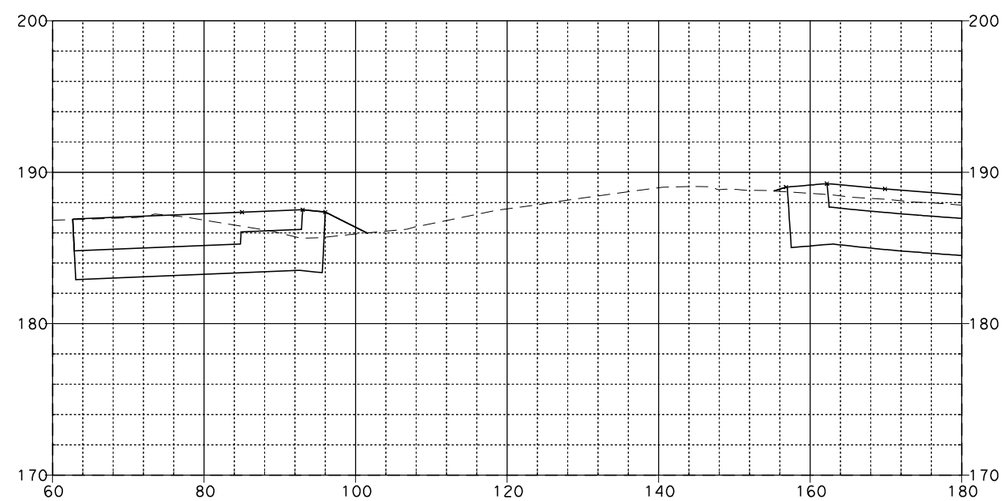

311+27.00

SR-57 MAINLINE

08\03\11

Dist	COUNTY	ROUTE	POST MILES TOTAL PROJECT	SHEET NO.	TOTAL SHEETS
12	Ora	57	12.2/15.2		

FOR EARTHWORK DEVELOPMENT ONLY

...\d0282599\Cross_Sections.dgn

EA 0F0401

SCALE: Horiz 1"=20'
Vert 1"=10'

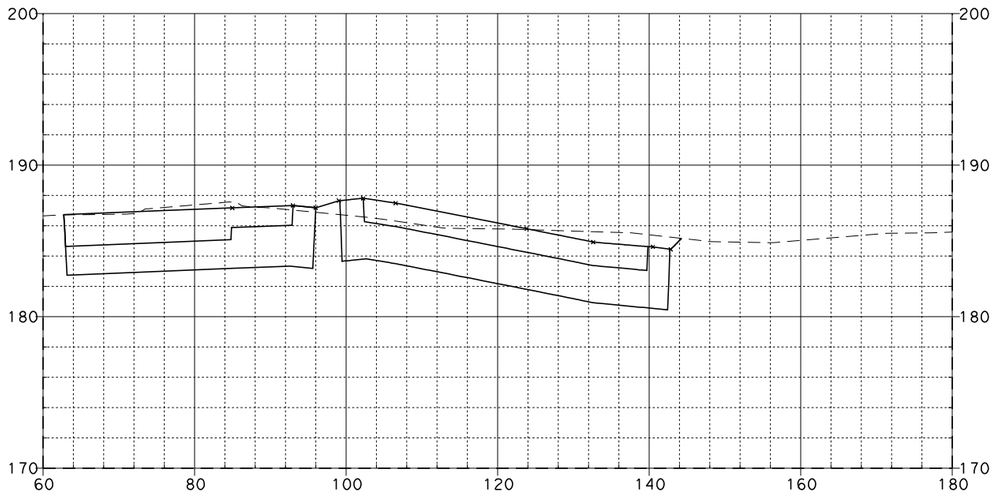

312+00.00

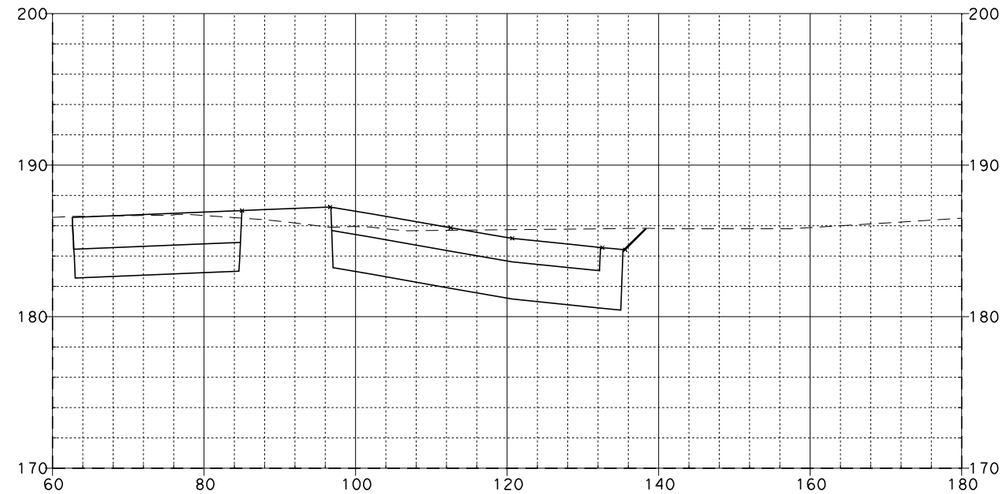

312+50.00

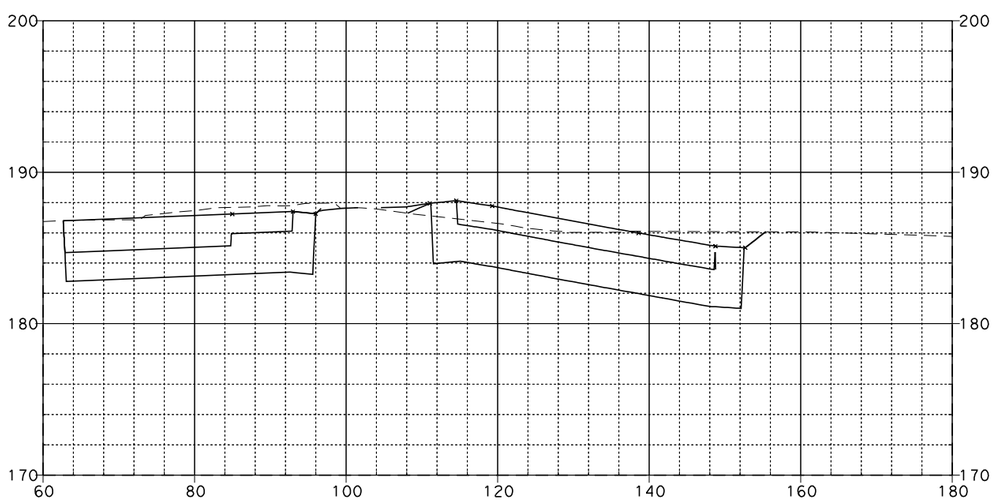

311+75.00

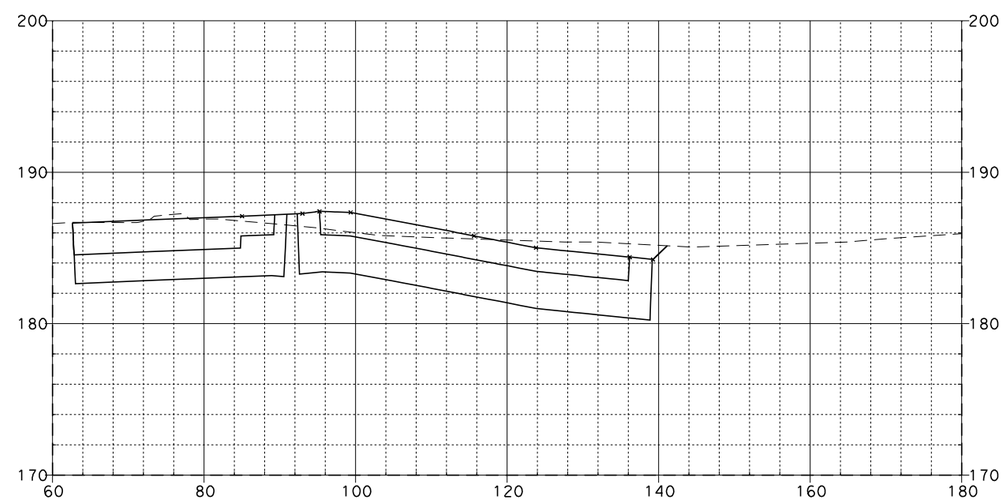

312+25.00

SR-57 MAINLINE

08\03\11

Dist	COUNTY	ROUTE	POST MILES TOTAL PROJECT	SHEET NO.	TOTAL SHEETS
12	Ora	57	12.2/15.2		

FOR EARTHWORK DEVELOPMENT ONLY

...\d0282599\Cross_Sections.dgn

EA 0F0401

SCALE: Horiz 1"=20'
Vert 1"=10'

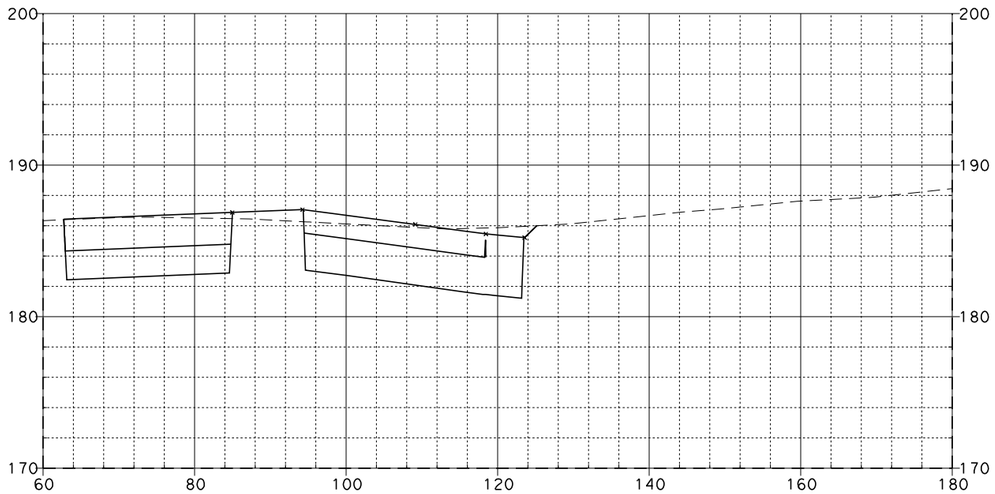

313+00.00

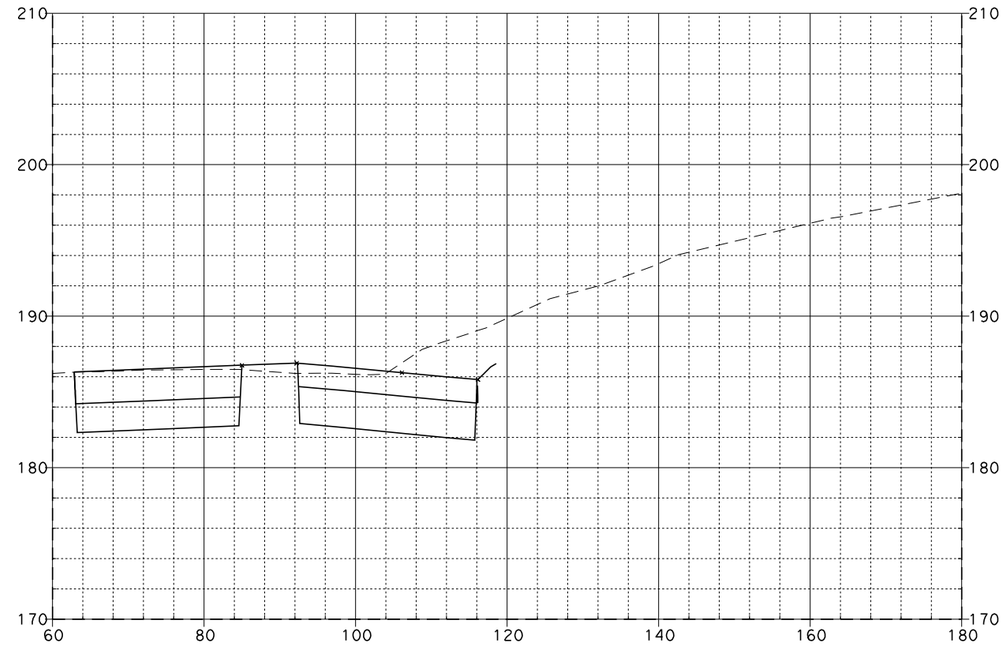

313+50.00

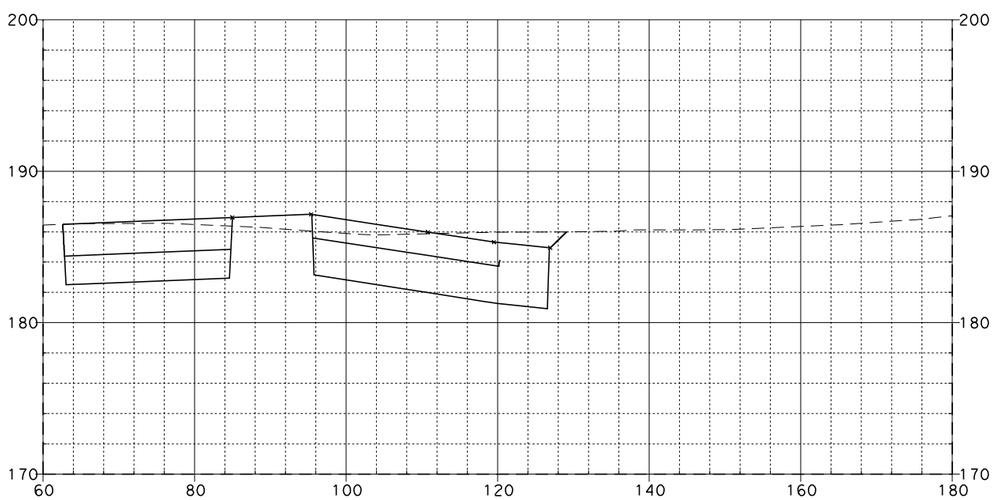

312+75.00

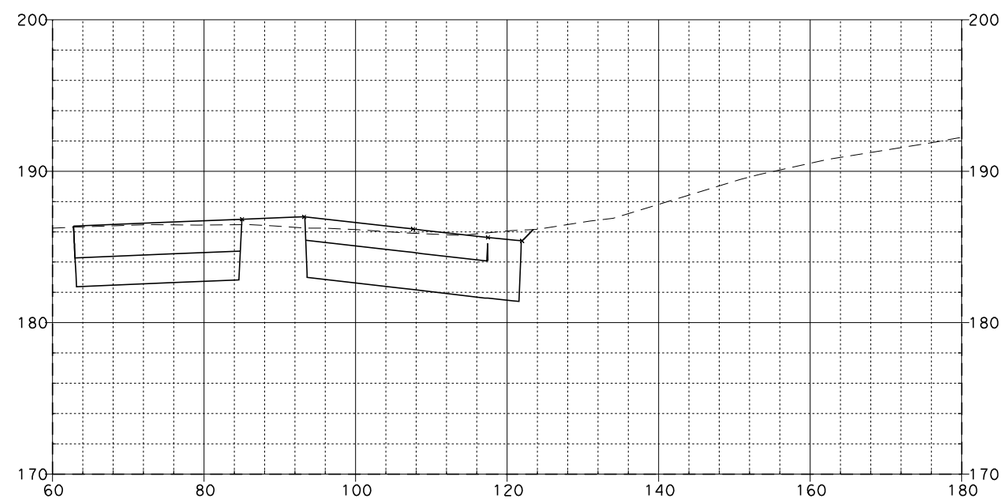

313+25.00

SR-57 MAINLINE

08\03\11

Dist	COUNTY	ROUTE	POST MILES TOTAL PROJECT	SHEET NO.	TOTAL SHEETS
12	Ora	57	12.2/15.2		

FOR EARTHWORK DEVELOPMENT ONLY

...\d0282599\Cross_Sections.dgn

EA 0F0401

SCALE: Horiz 1"=20'
Vert 1"=10'

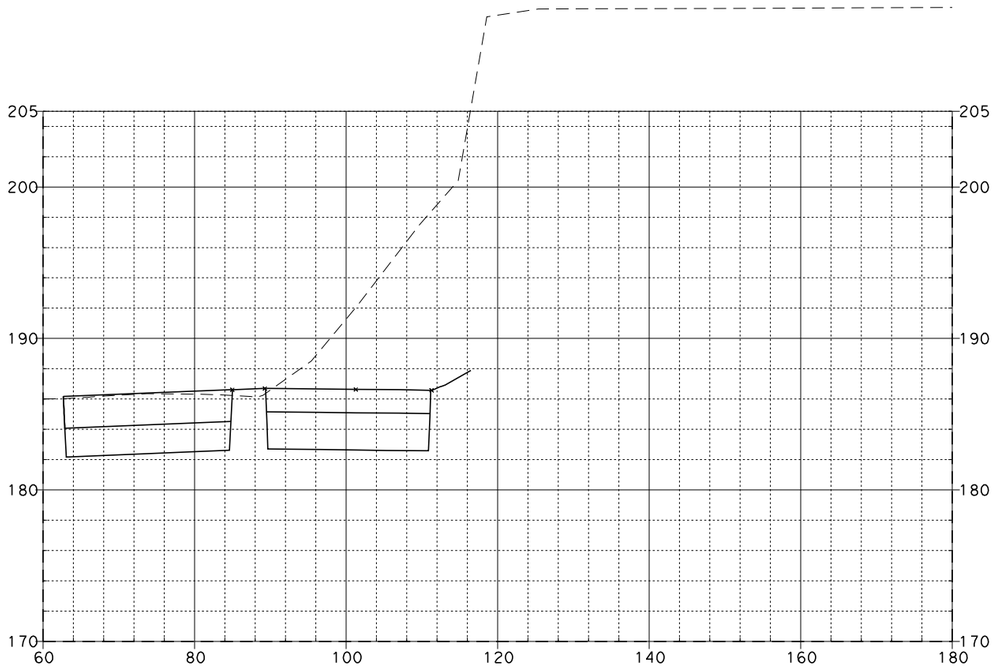

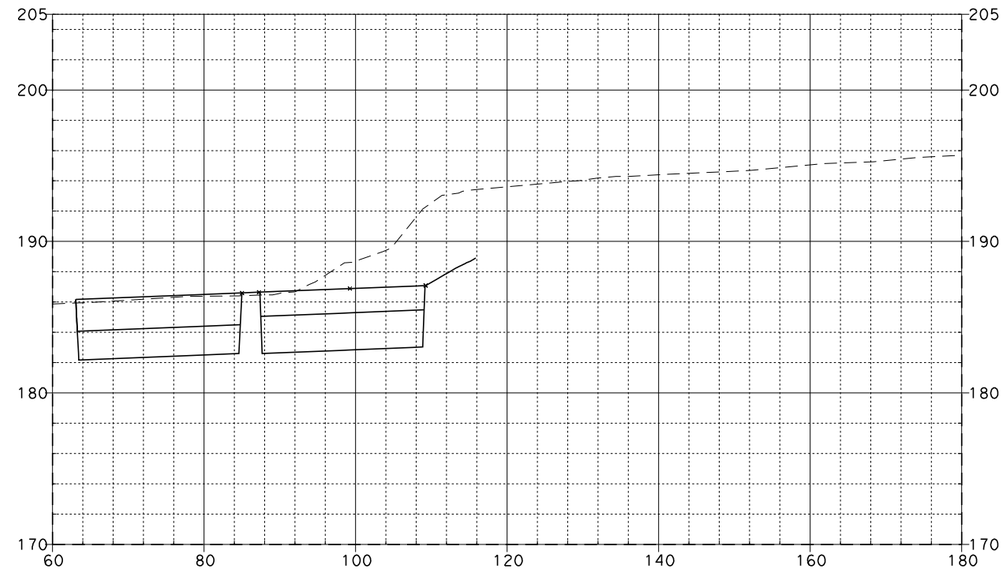

314+50.00

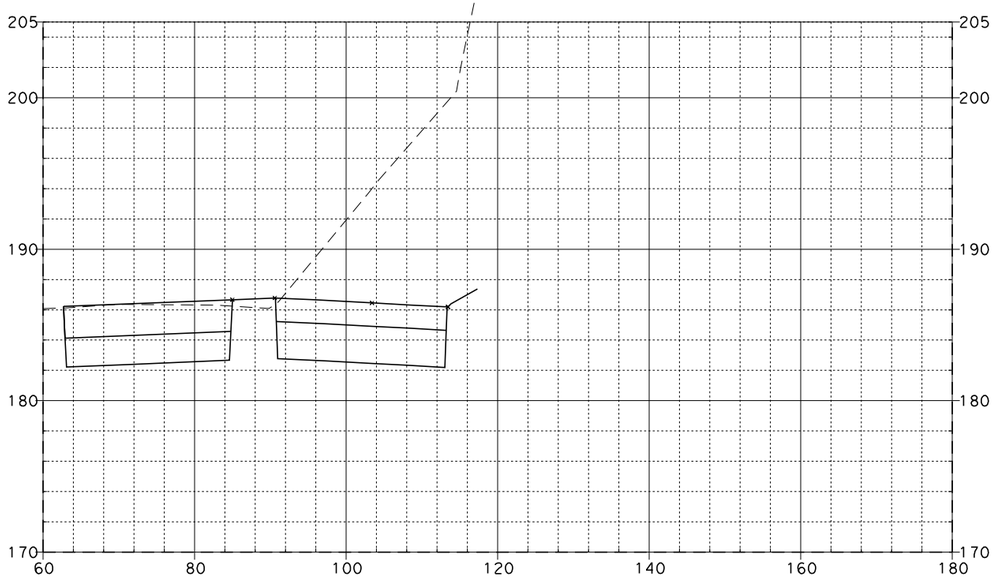

315+50.00

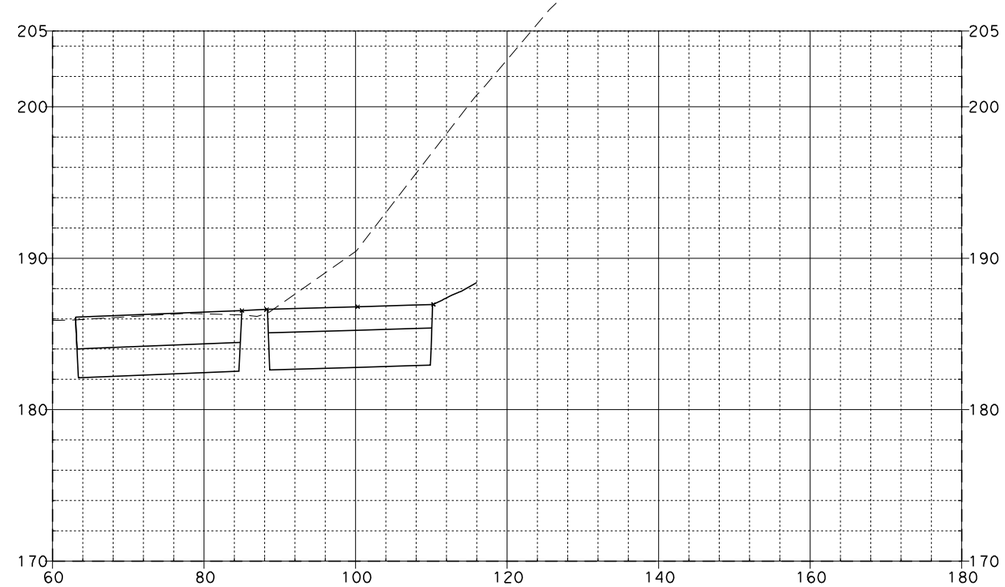

314+00.00

SR-57 MAINLINE

315+00.00

08\03\11

Dist	COUNTY	ROUTE	POST MILES TOTAL PROJECT	SHEET No.	TOTAL SHEETS
12	Ora	57	12.2/15.2		

FOR EARTHWORK DEVELOPMENT ONLY

...\d0282599\Cross_Sections.dgn

EA 0F0401

SCALE: Horiz 1"=20'
Vert 1"=10'

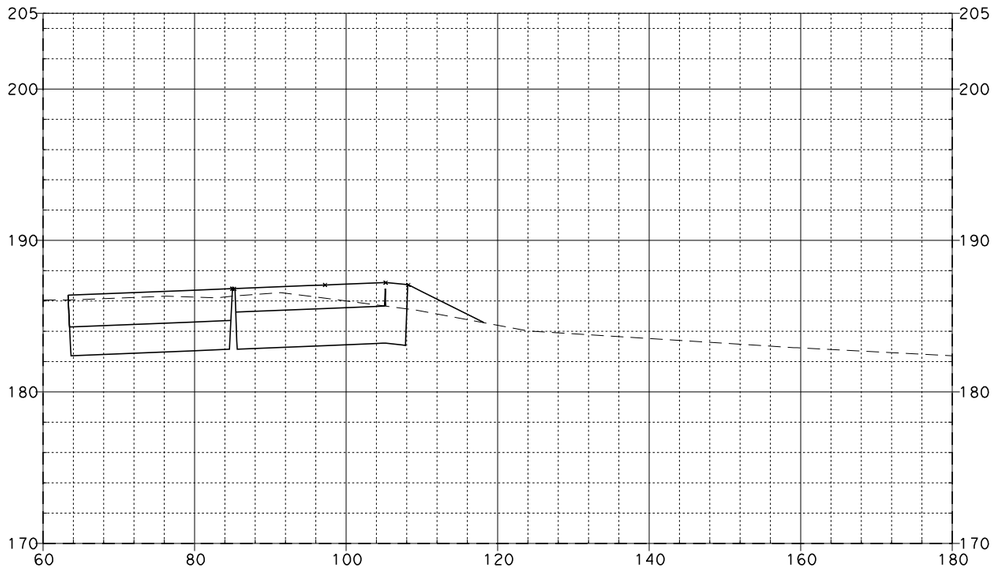

316+50.00

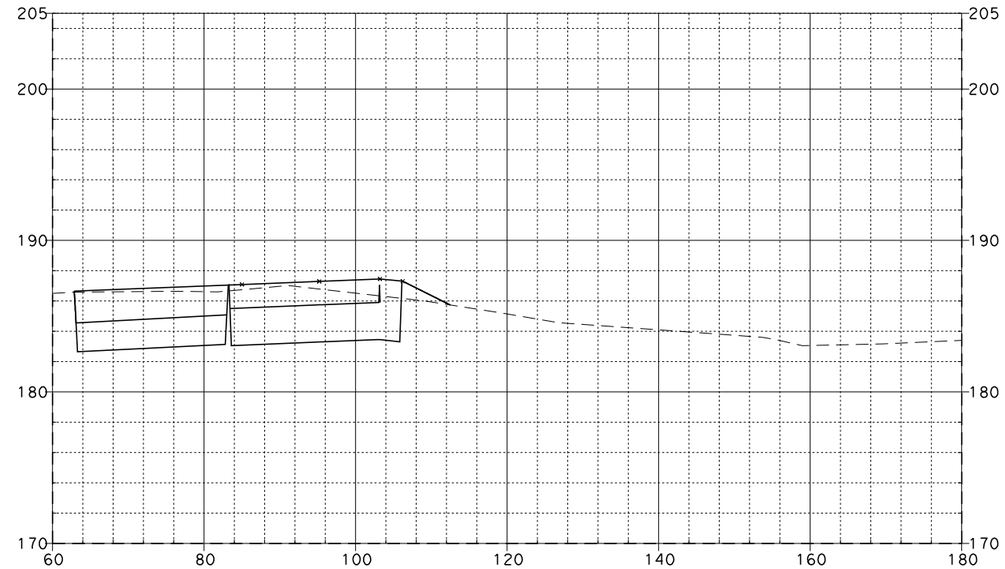

317+50.00

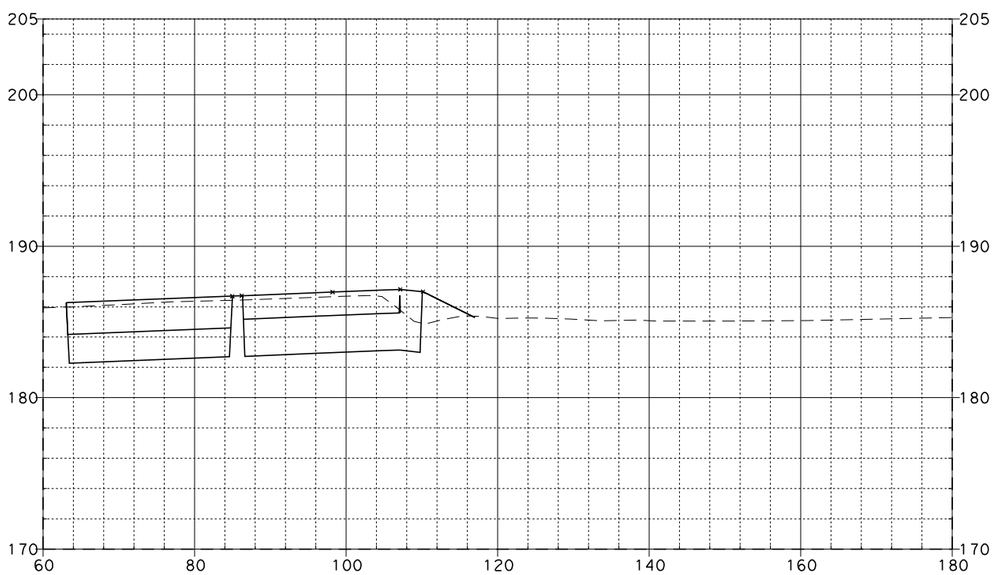

316+00.00

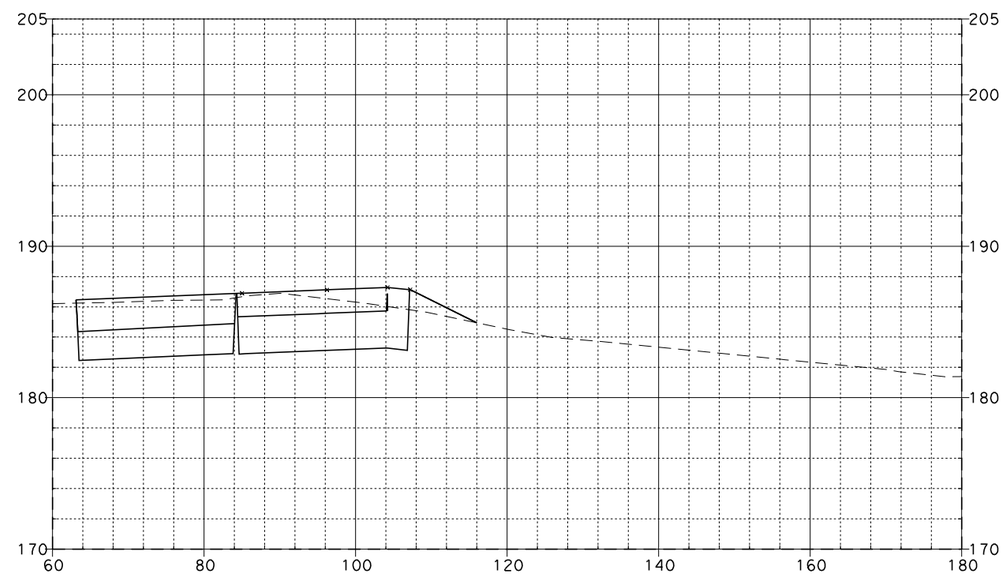

317+00.00

SR-57 MAINLINE

08\03\11

Dist	COUNTY	ROUTE	POST MILES TOTAL PROJECT	SHEET No.	TOTAL SHEETS
12	Ora	57	12.2/15.2		

FOR EARTHWORK DEVELOPMENT ONLY

...\d0282599\Cross_Sections.dgn

EA 0F0401

SCALE: Horiz 1"=20'
Vert 1"=10'

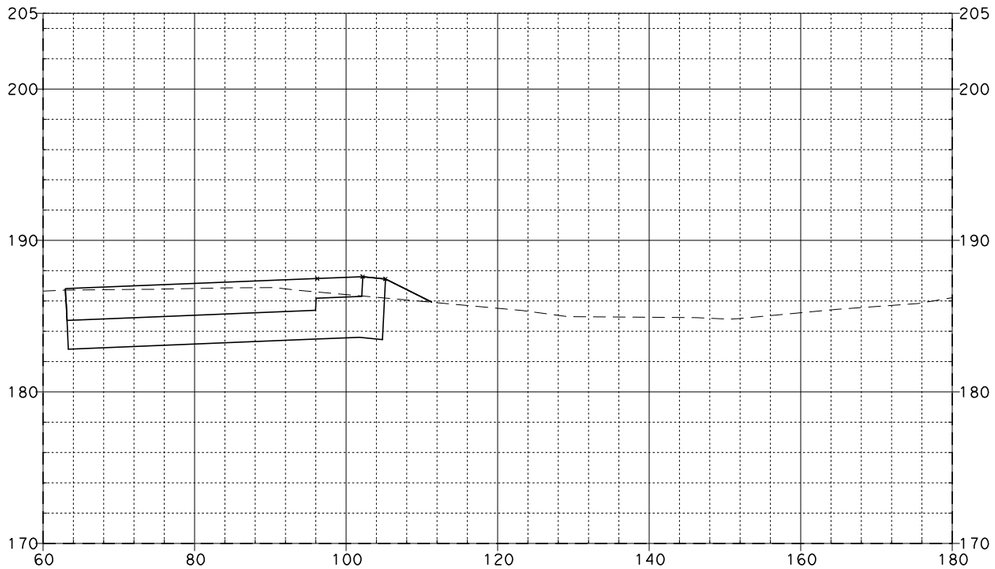

318+00.00

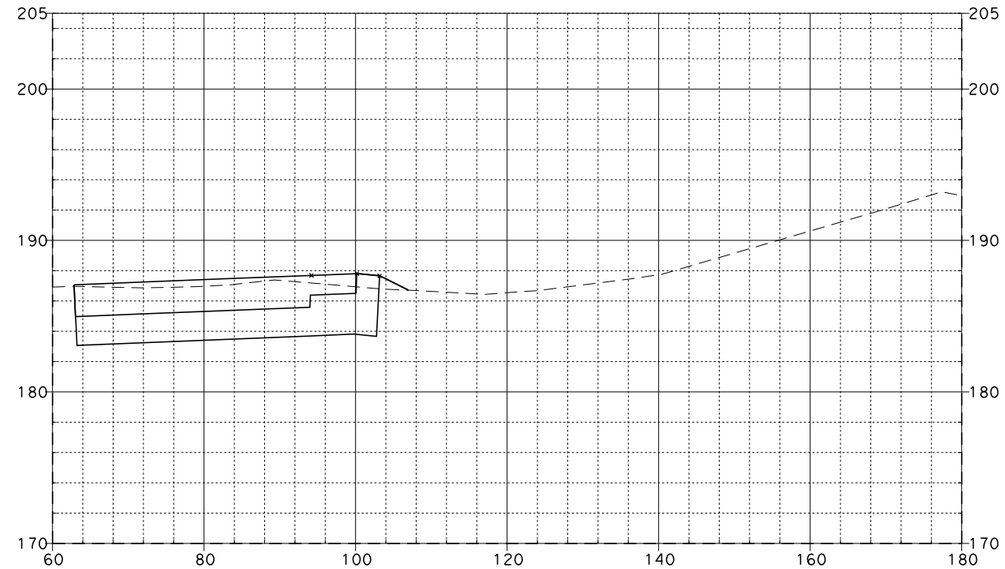

319+00.00

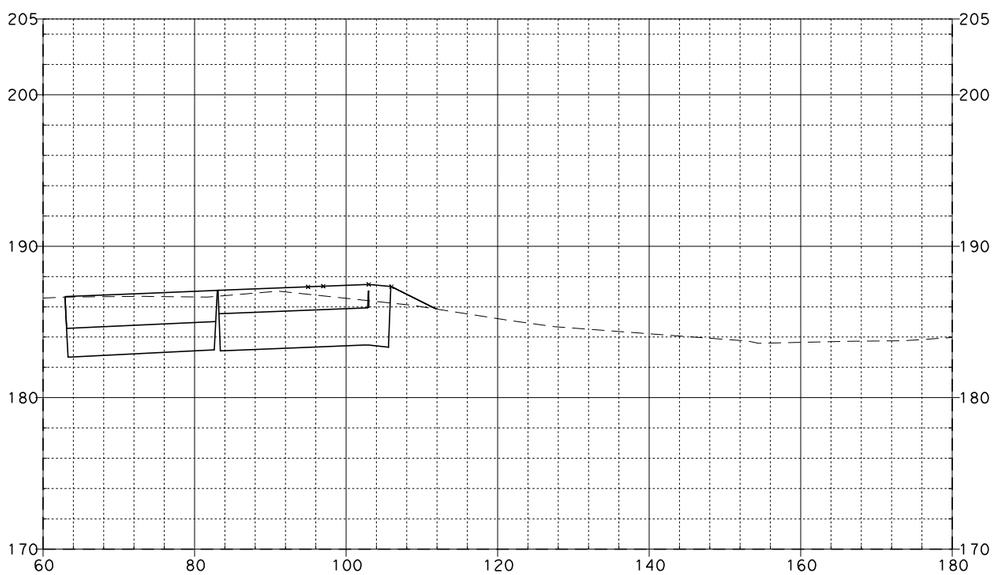

317+60.00

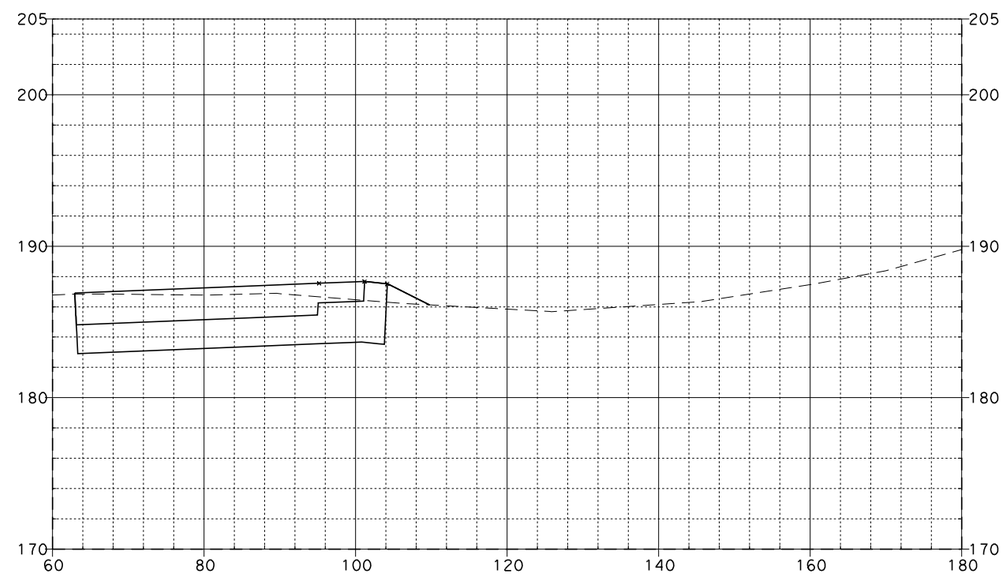

318+50.00

SR-57 MAINLINE

08\03\11

Dist	COUNTY	ROUTE	POST MILES TOTAL PROJECT	SHEET No.	TOTAL SHEETS
12	Ora	57	12.2/15.2		

FOR EARTHWORK DEVELOPMENT ONLY

...\d0282599\Cross_Sections.dgn

EA 0F0401

SCALE: Horiz 1"=20'
Vert 1"=10'

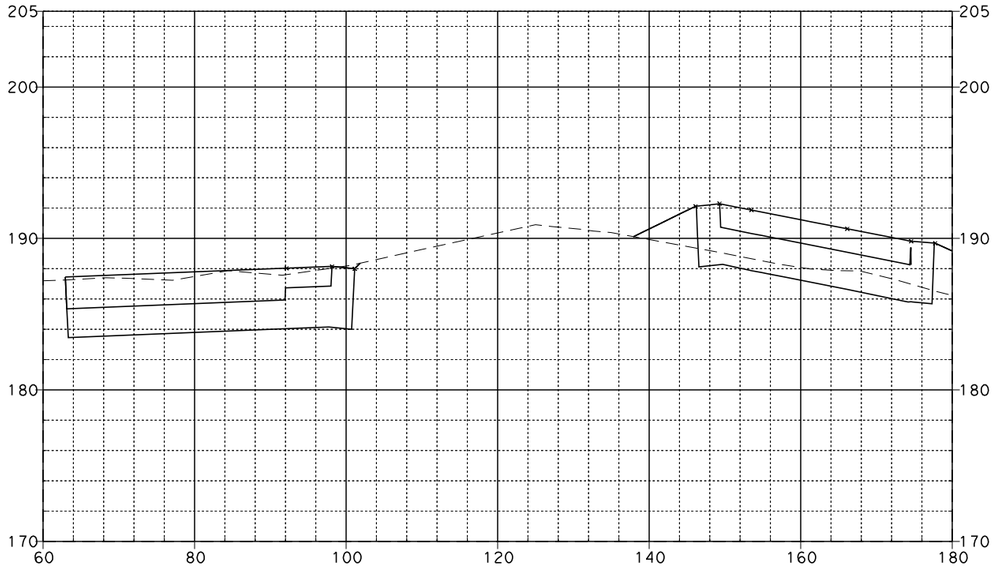

320+00.00

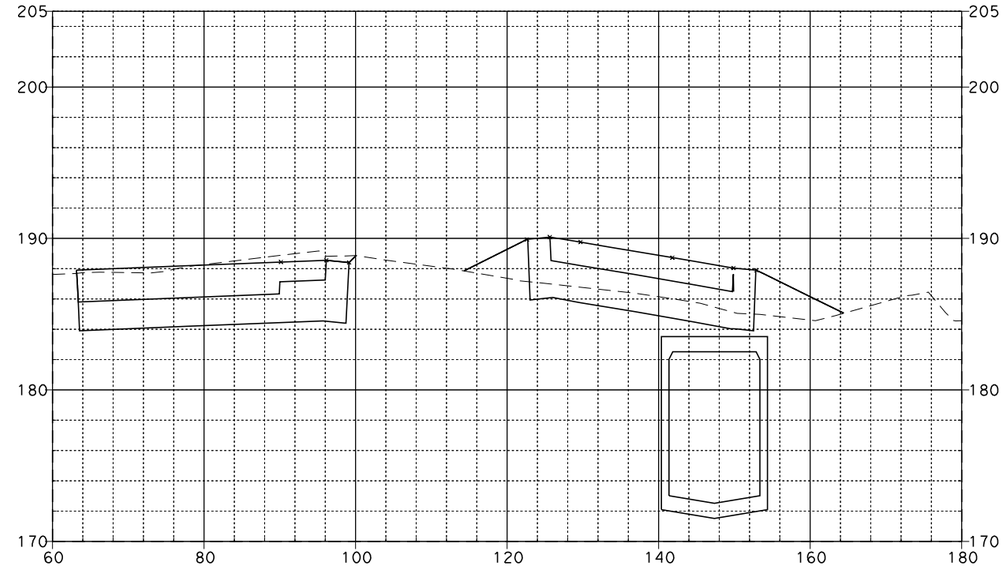

321+00.00

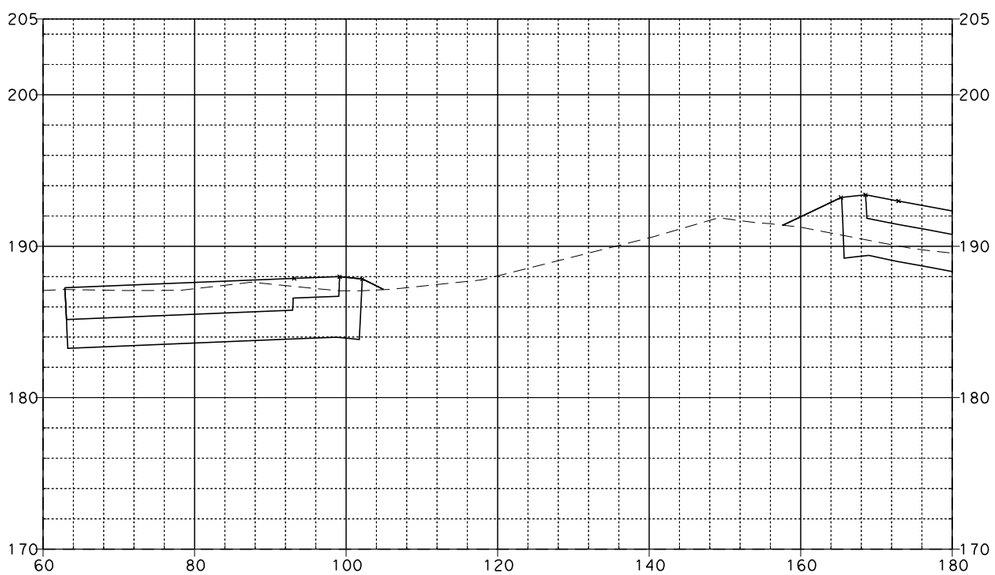

319+50.00

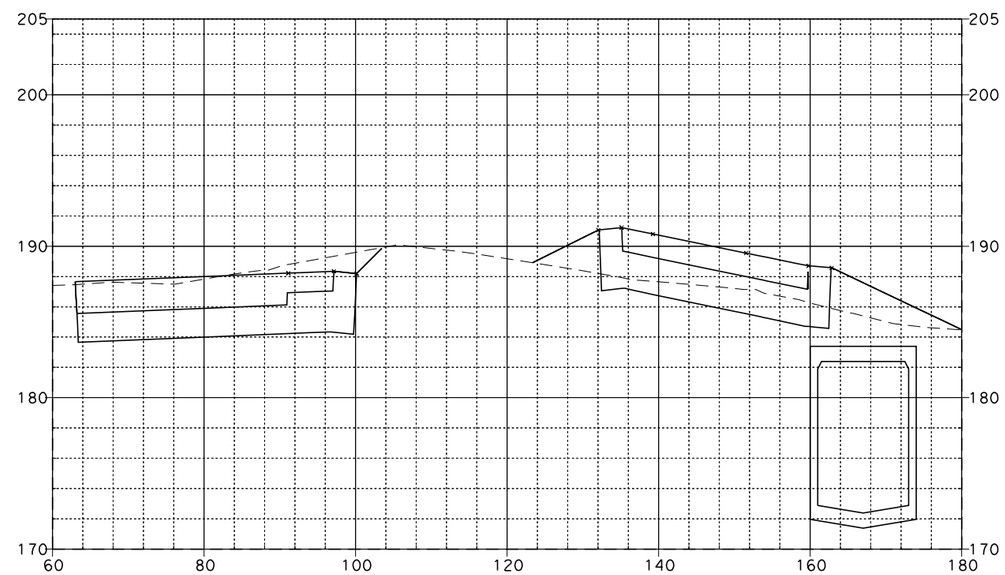

320+50.00

SR-57 MAINLINE

08\03\11

Dist	COUNTY	ROUTE	POST MILES TOTAL PROJECT	SHEET No.	TOTAL SHEETS
12	Ora	57	12.2/15.2		

FOR EARTHWORK DEVELOPMENT ONLY

...\d0282599\Cross_Sections.dgn

EA 0F0401

SCALE: Horiz 1"=20'
Vert 1"=10'

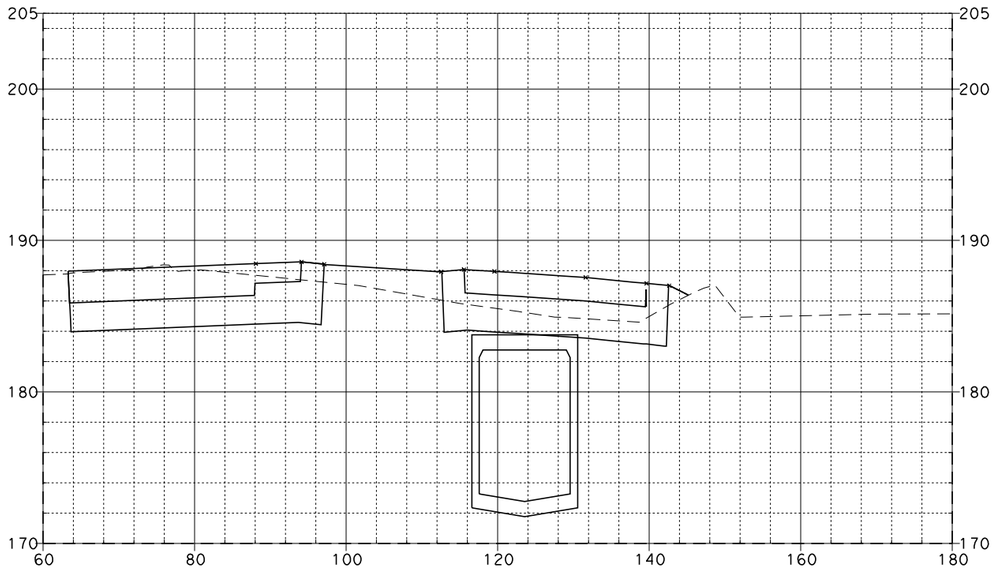

322+00.00

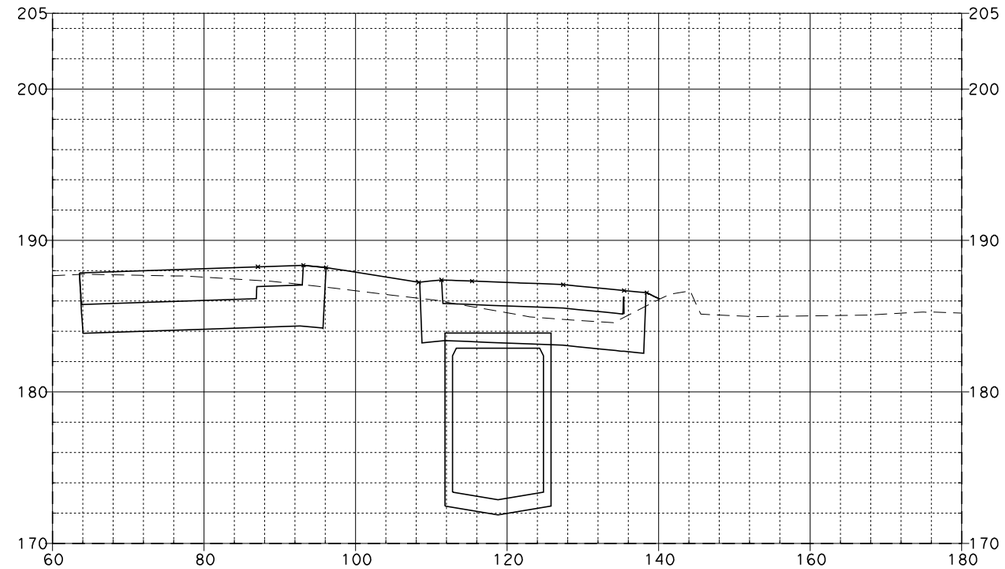

322+50.00

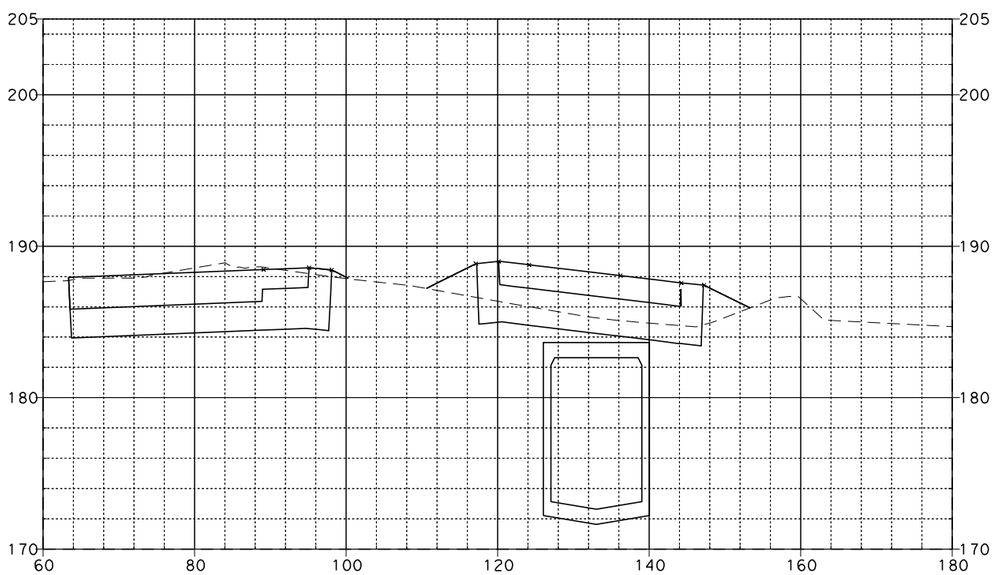

321+50.00

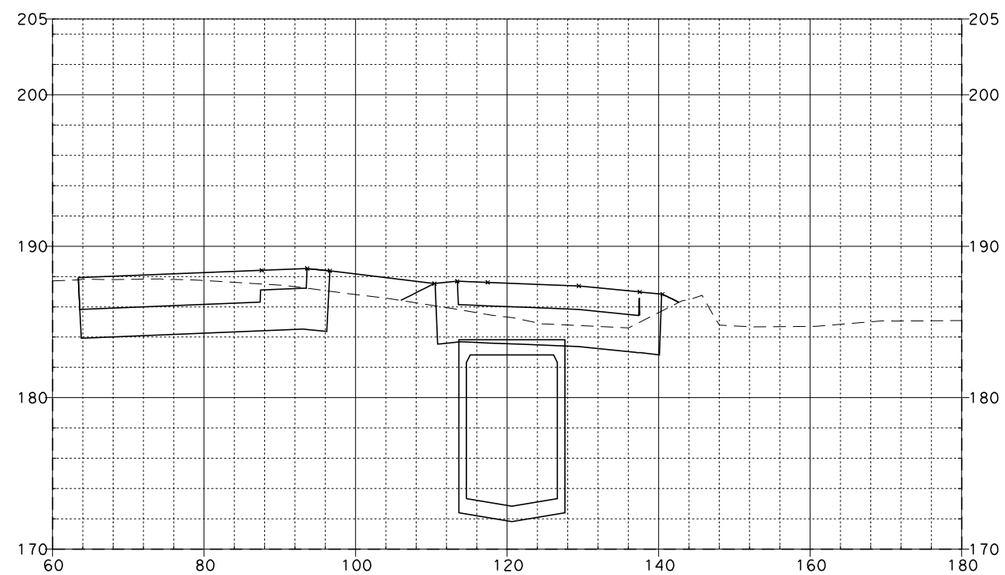

322+25.00

SR-57 MAINLINE

08\03\11

Dist	COUNTY	ROUTE	POST MILES TOTAL PROJECT	SHEET No.	TOTAL SHEETS
12	Ora	57	12.2/15.2		

FOR EARTHWORK DEVELOPMENT ONLY

...\d0282599\Cross_Sections.dgn

EA 0F0401

SCALE: Horiz 1"=20'
Vert 1"=10'

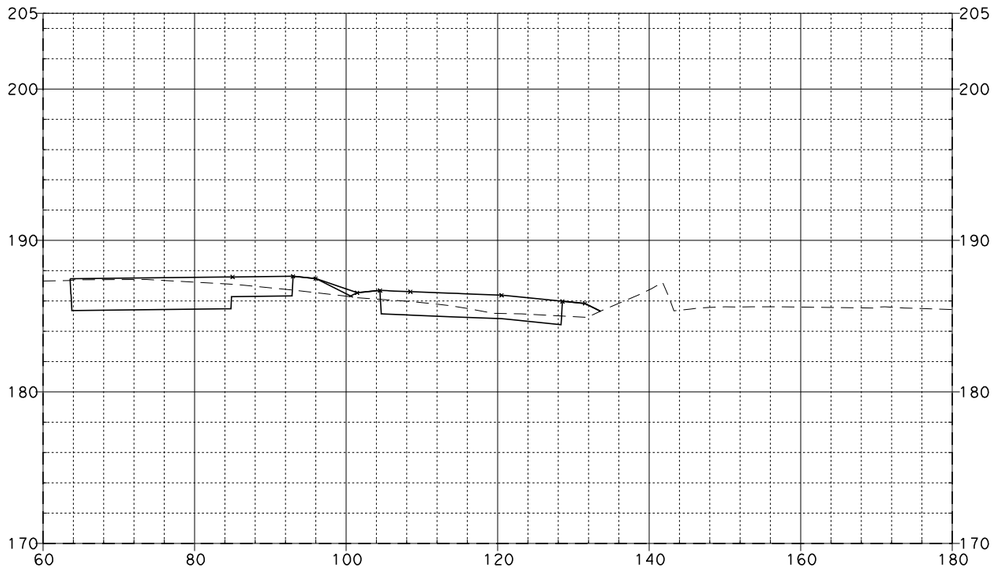

323+39.64

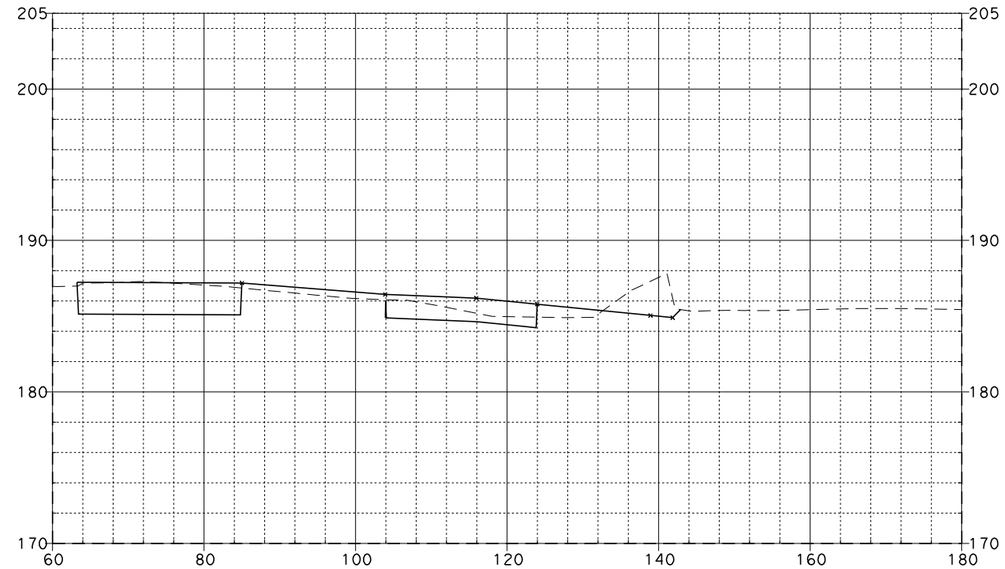

324+00.00

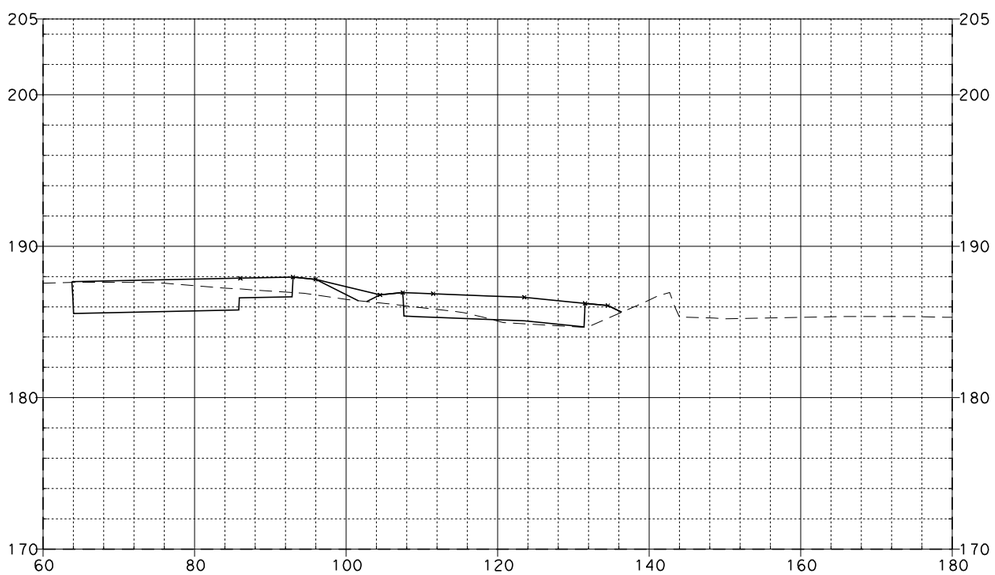

323+00.00

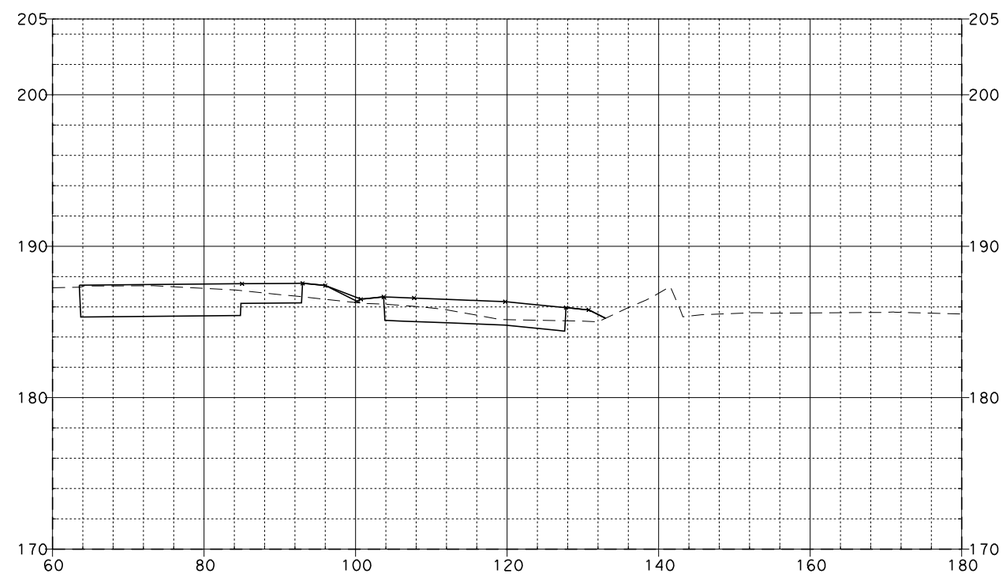

323+50.00

SR-57 MAINLINE

08\03\11

Dist	COUNTY	ROUTE	POST MILES TOTAL PROJECT	SHEET No.	TOTAL SHEETS
12	Ora	57	12.2/15.2		

FOR EARTHWORK DEVELOPMENT ONLY

...\d0282599\Cross_Sections.dgn

EA 0F0401

SCALE: Horiz 1"=20'
Vert 1"=10'

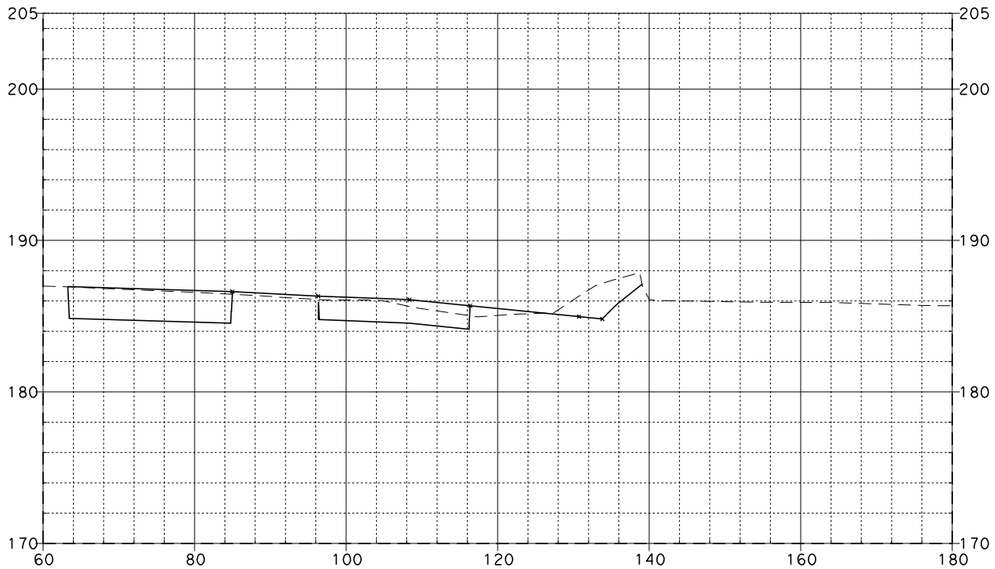

325+00.00

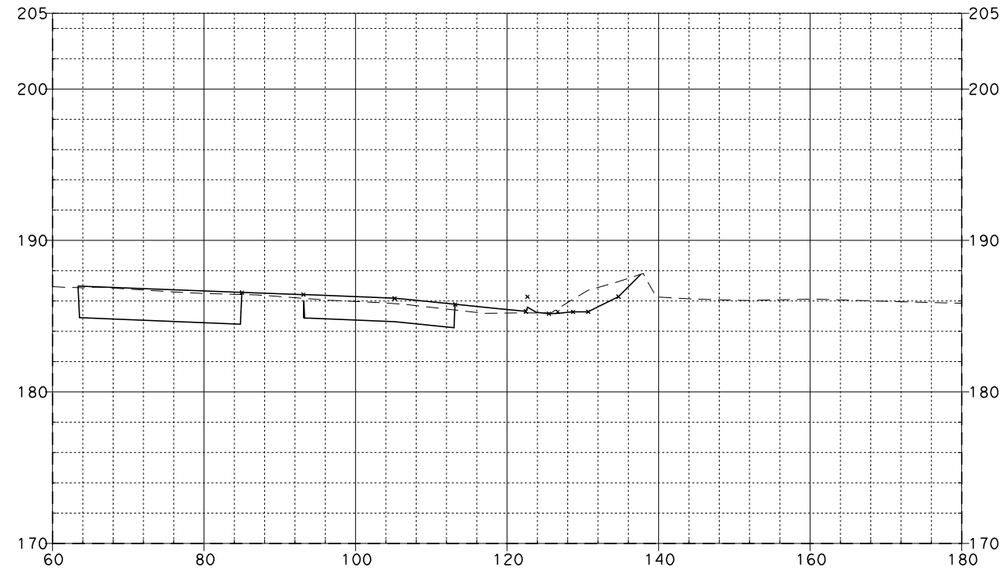

325+50.00

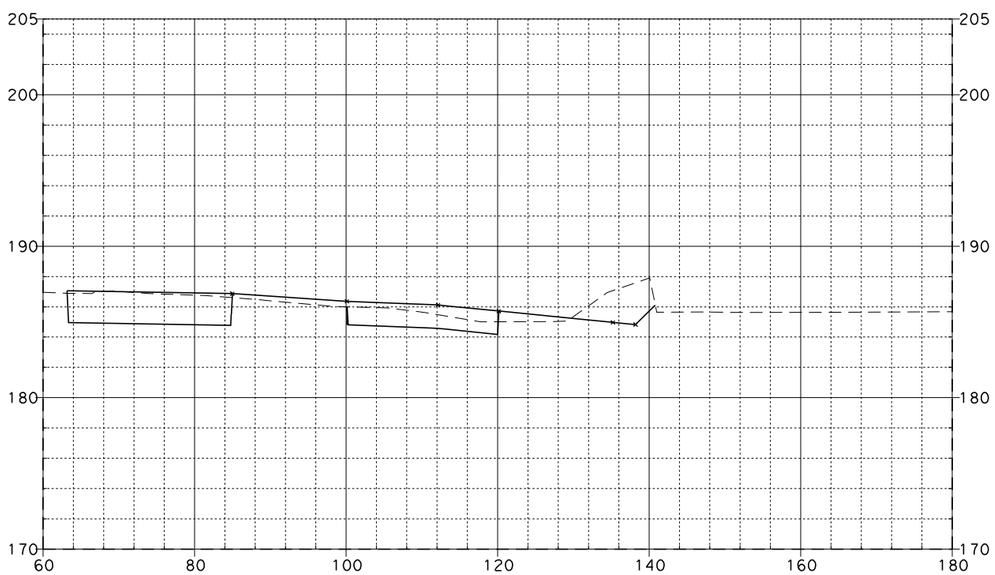

324+50.00

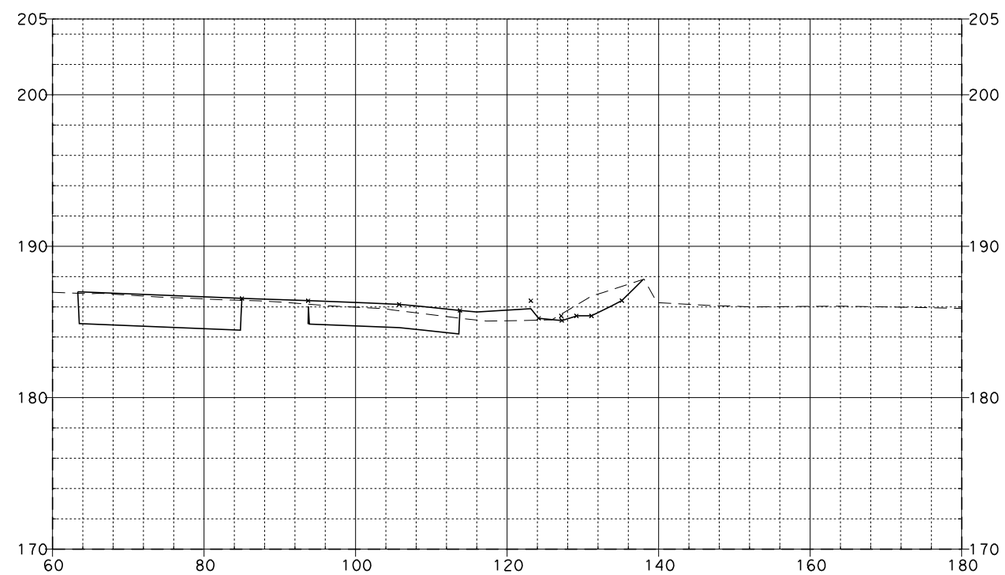

325+39.29

SR-57 MAINLINE

08\03\11

Dist	COUNTY	ROUTE	POST MILES TOTAL PROJECT	SHEET No.	TOTAL SHEETS
12	Ora	57	12.2/15.2		

FOR EARTHWORK DEVELOPMENT ONLY

...\d0282599\Cross_Sections.dgn

EA 0F0401

SCALE: Horiz 1"=20'
Vert 1"=10'

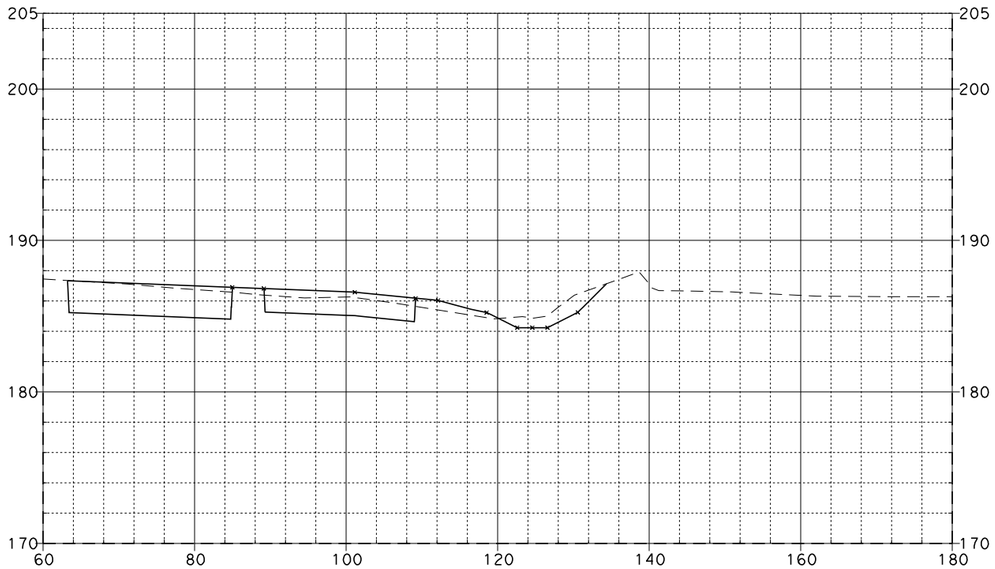

326+50.00

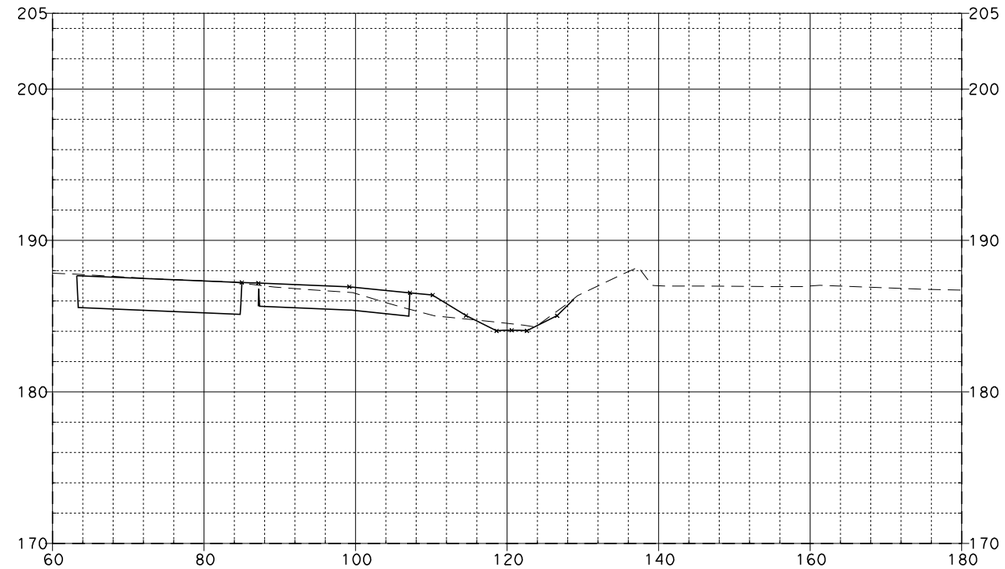

327+50.00

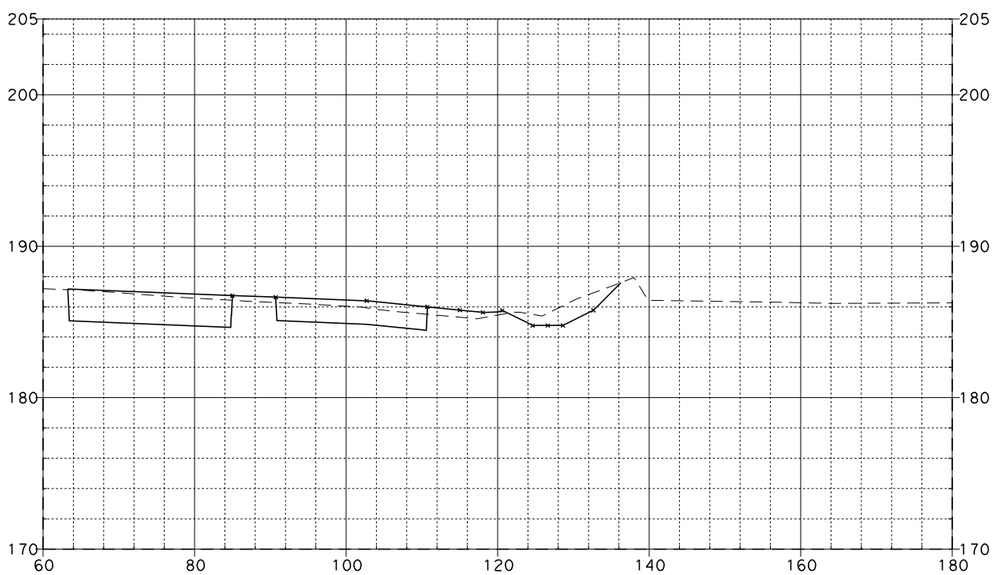

326+00.00

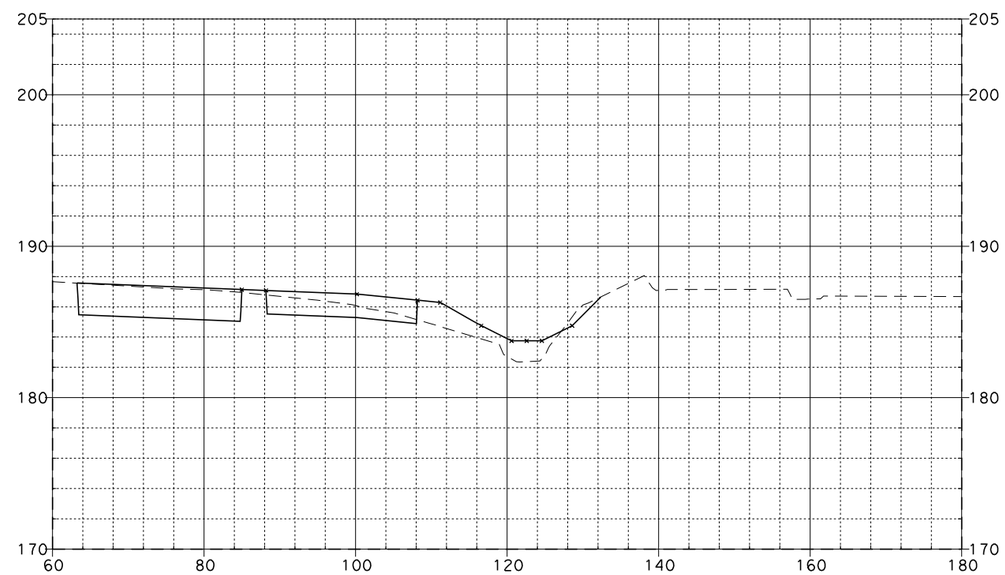

327+00.00

SR-57 MAINLINE

08\03\11

Dist	COUNTY	ROUTE	POST MILES TOTAL PROJECT	SHEET No.	TOTAL SHEETS
12	Ora	57	12.2/15.2		

FOR EARTHWORK DEVELOPMENT ONLY

...\d0282599\Cross_Sections.dgn

EA 0F0401

SCALE: Horiz 1"=20'
Vert 1"=10'

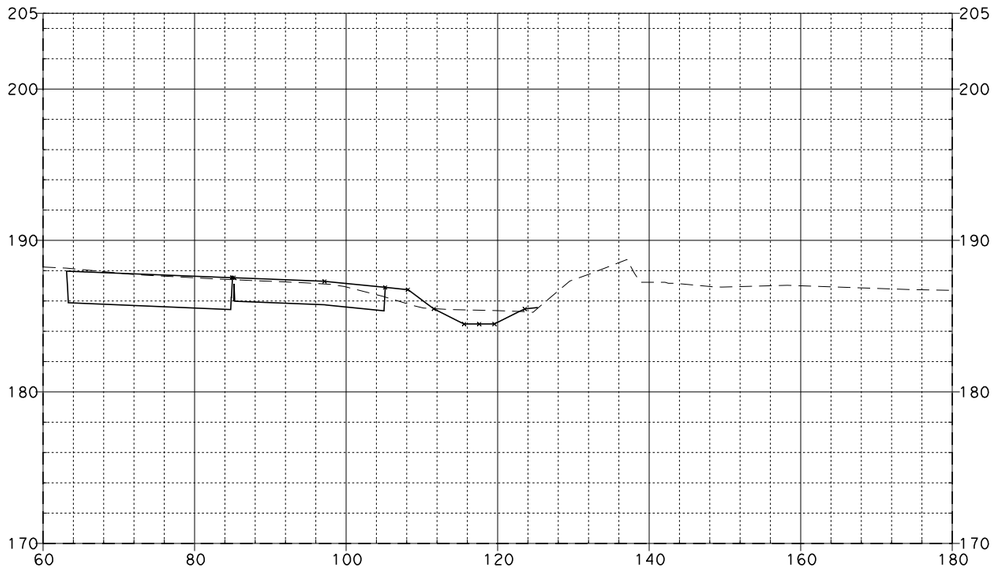

328+50.00

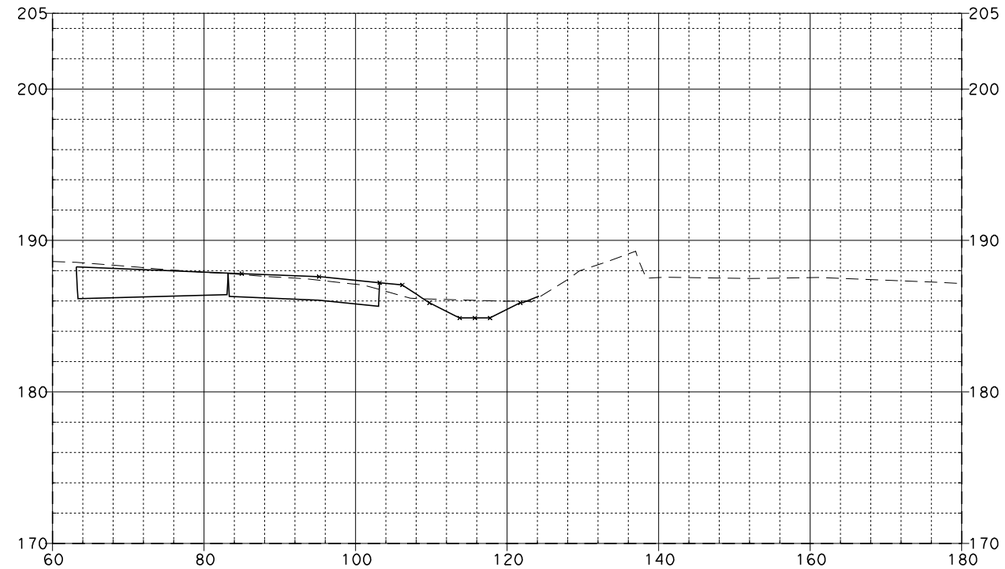

329+50.00

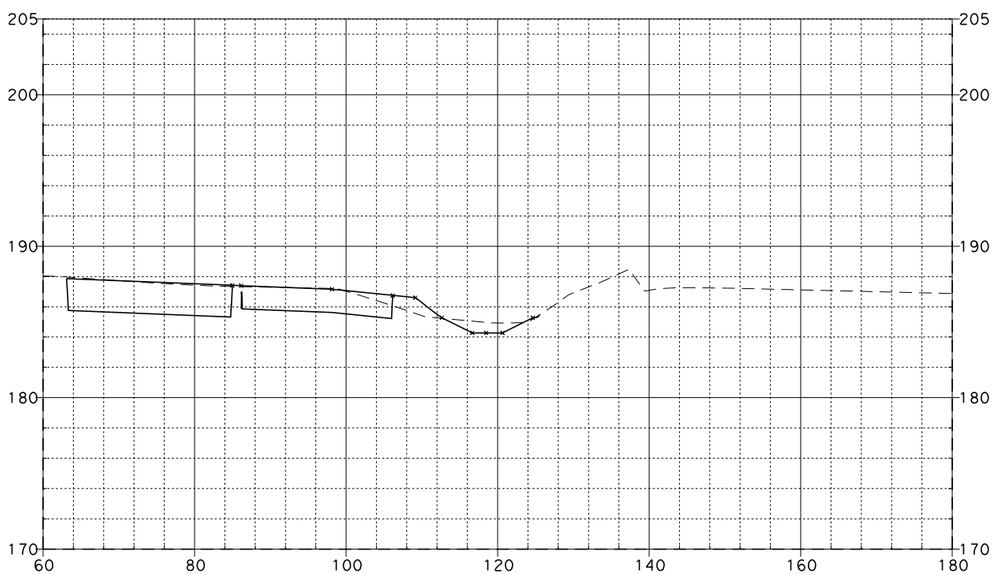

328+00.00

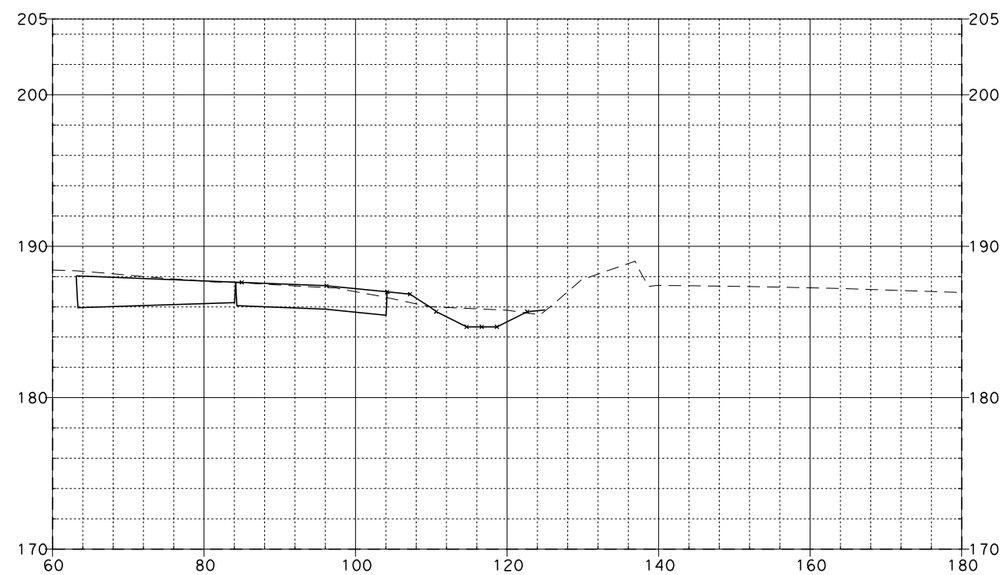

329+00.00

SR-57 MAINLINE

08\03\11

Dist	COUNTY	ROUTE	POST MILES TOTAL PROJECT	SHEET No.	TOTAL SHEETS
12	Ora	57	12.2/15.2		

FOR EARTHWORK DEVELOPMENT ONLY

...\d0282599\Cross_Sections.dgn

EA 0F0401

SCALE: Horiz 1"=20'
Vert 1"=10'

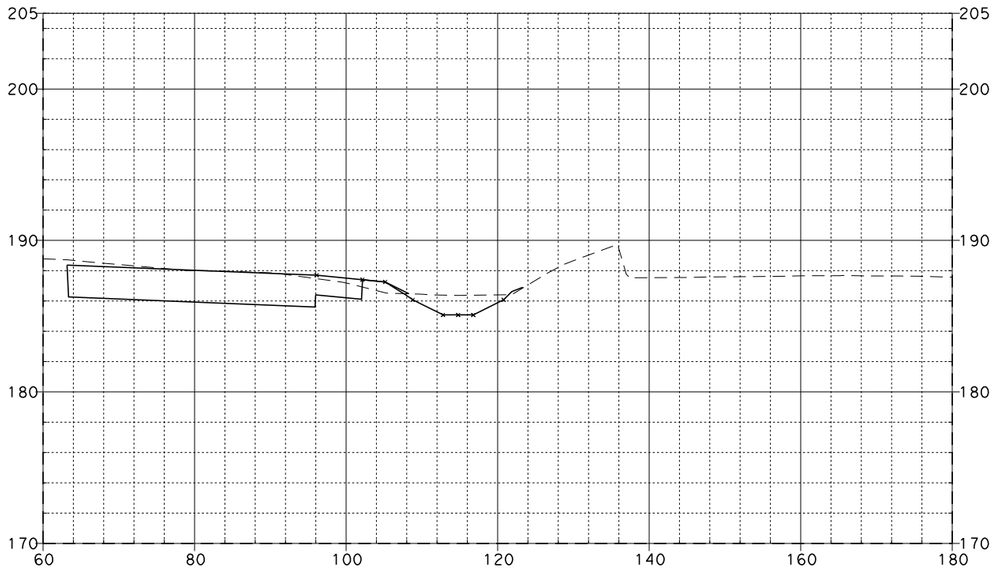

330+00.00

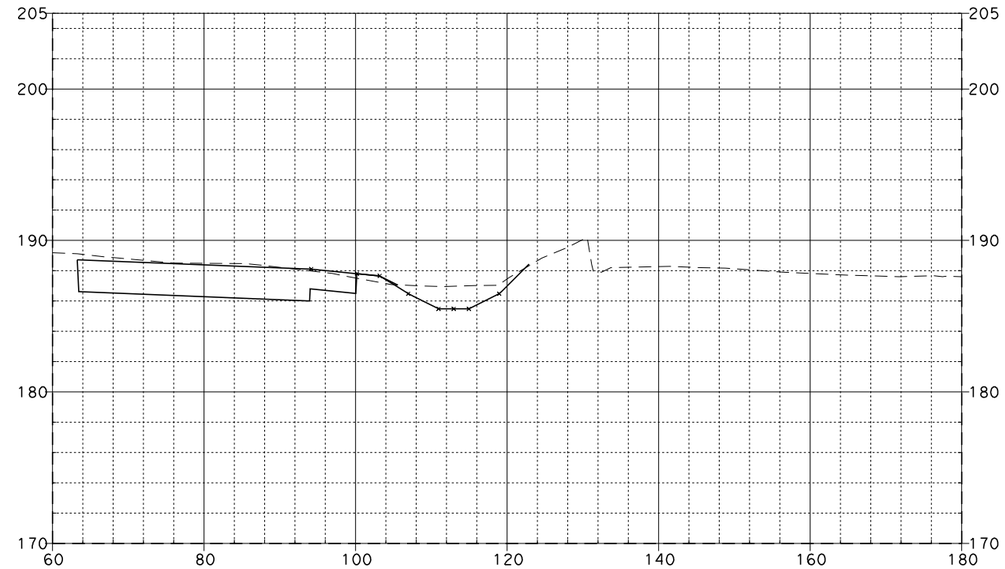

331+00.00

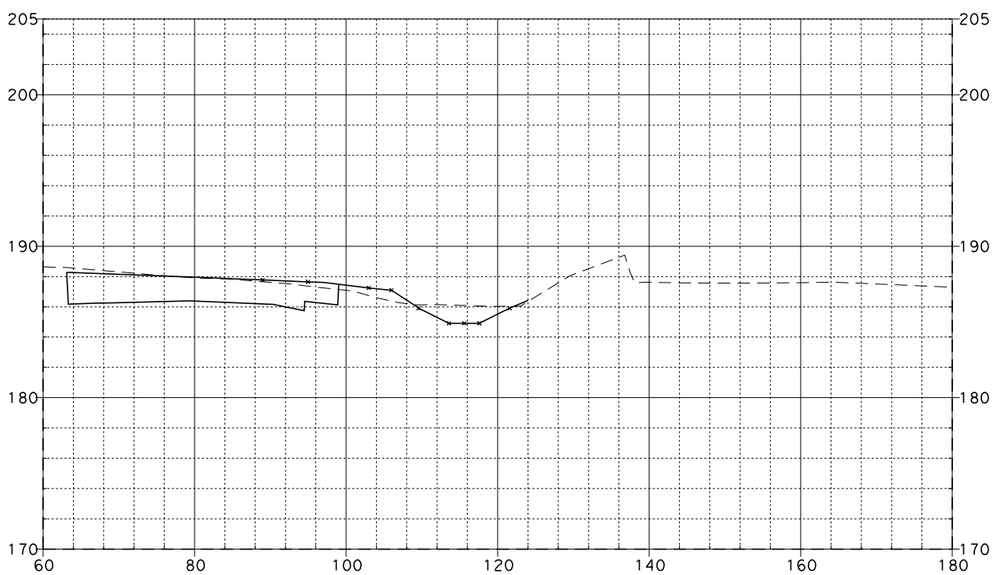

329+58.12

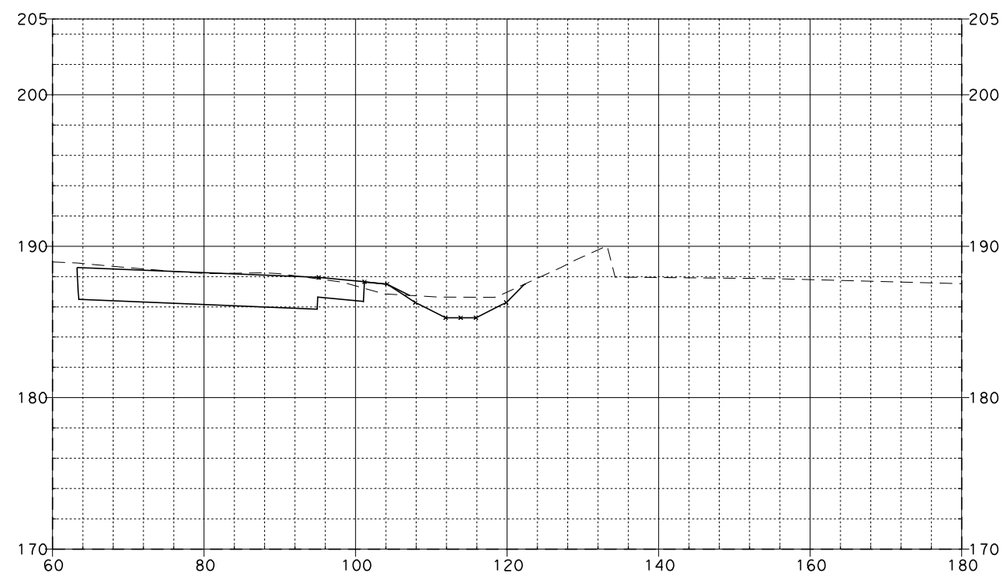

330+50.00

SR-57 MAINLINE

08\03\11

Dist	COUNTY	ROUTE	POST MILES TOTAL PROJECT	SHEET No.	TOTAL SHEETS
12	Ora	57	12.2/15.2		

FOR EARTHWORK DEVELOPMENT ONLY

...\d0282599\Cross_Sections.dgn

EA 0F0401

SCALE: Horiz 1"=20'
Vert 1"=10'

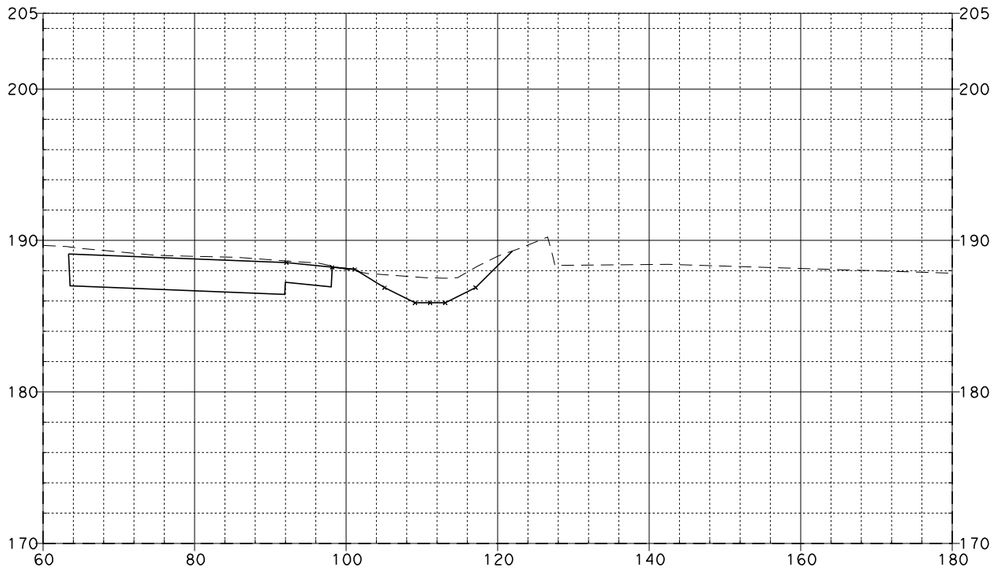

332+00.00

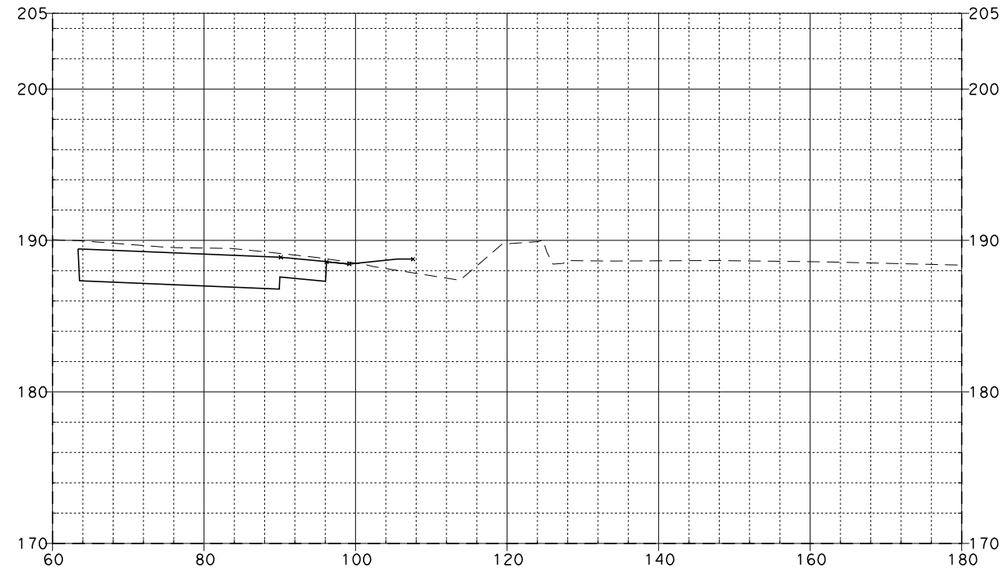

333+00.00

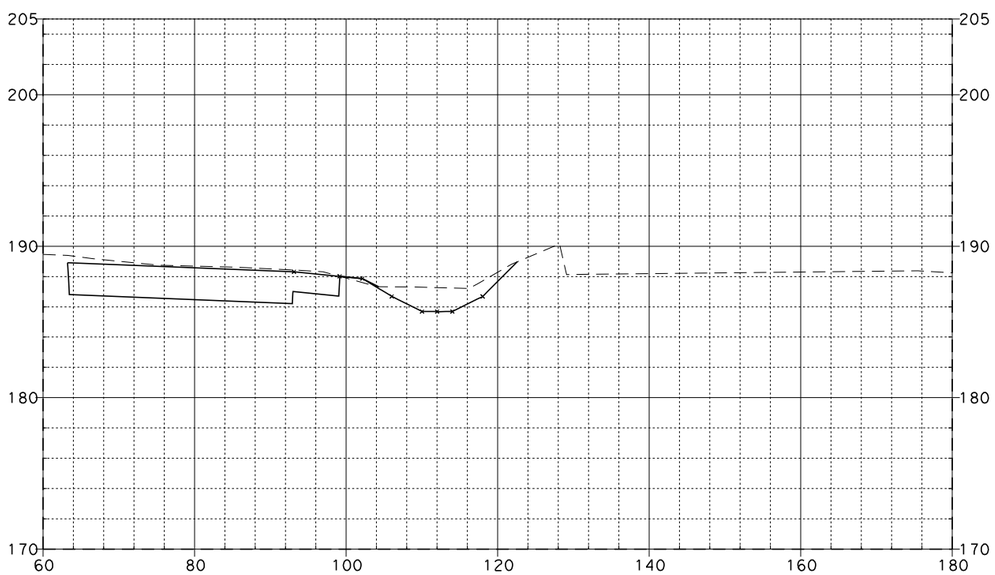

331+50.00

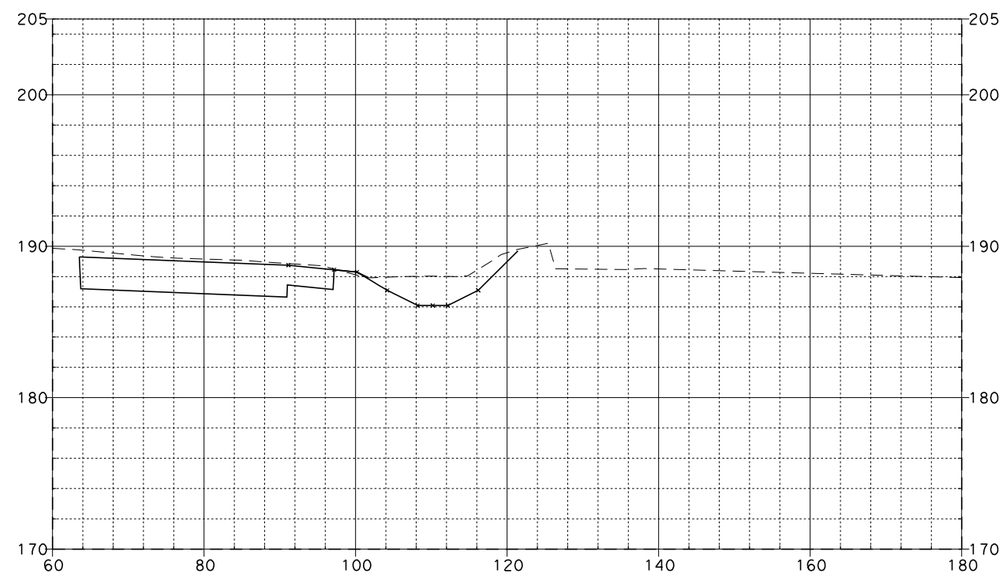

332+50.00

SR-57 MAINLINE

08\03\11

Dist	COUNTY	ROUTE	POST MILES TOTAL PROJECT	SHEET No.	TOTAL SHEETS
12	Ora	57	12.2/15.2		

FOR EARTHWORK DEVELOPMENT ONLY

...\d0282599\Cross_Sections.dgn

EA 0F0401

SCALE: Horiz 1"=20'
Vert 1"=10'

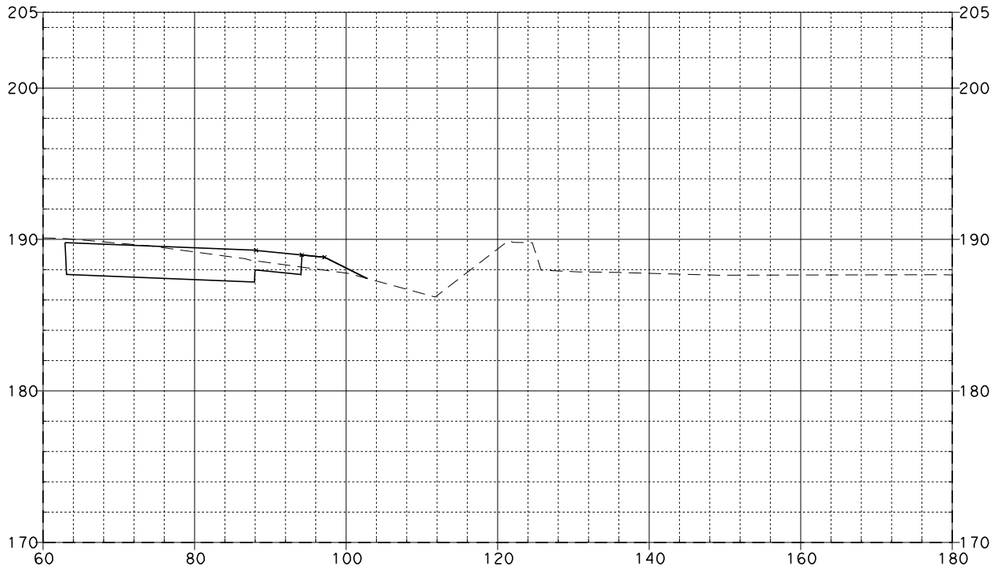

334+00.00

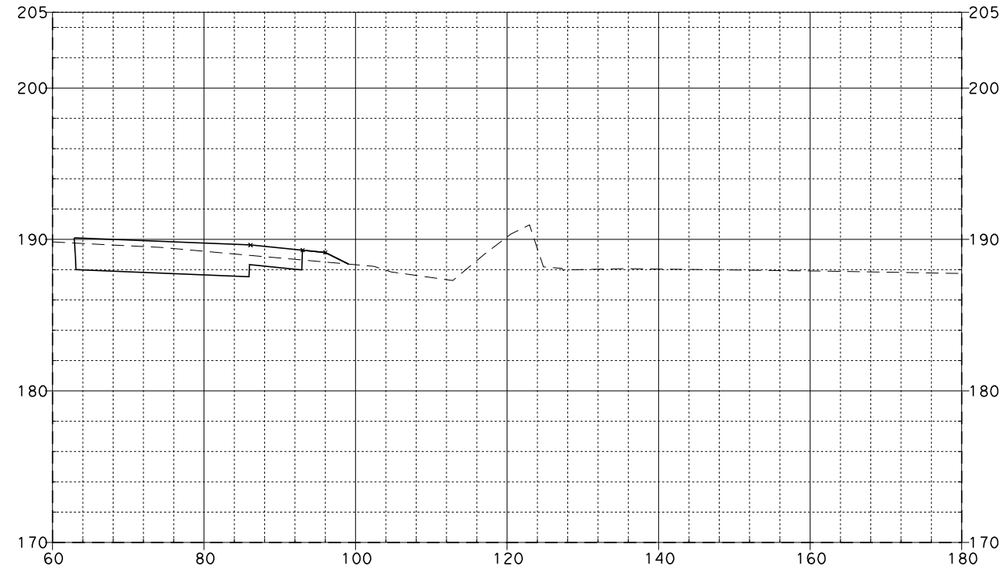

335+00.00

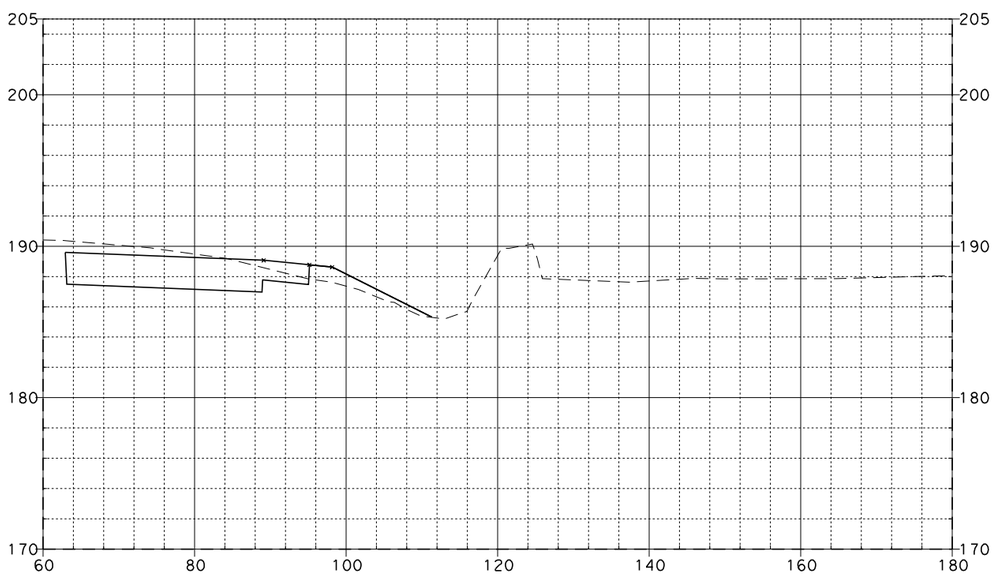

333+50.00

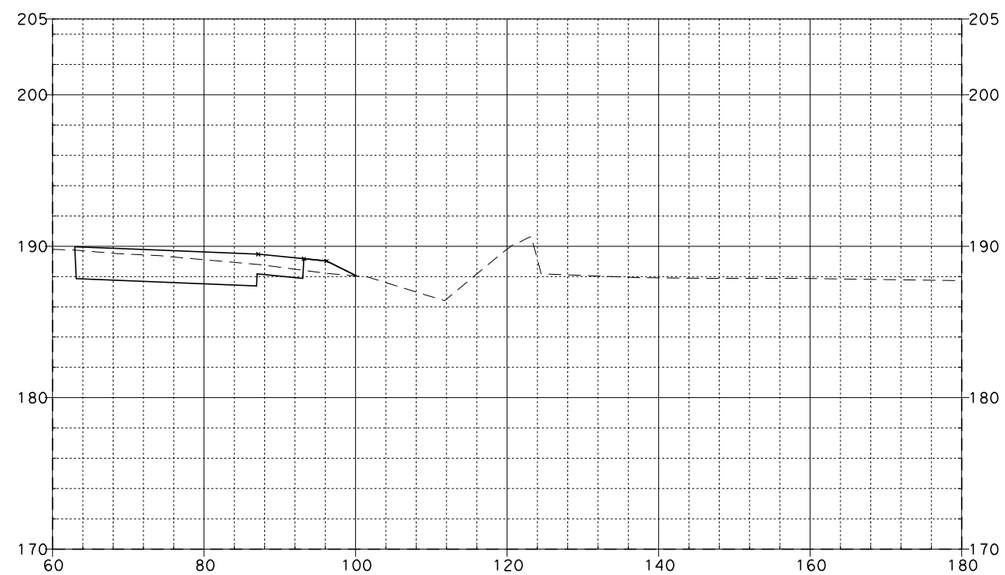

334+50.00

SR-57 MAINLINE

08\03\11

Dist	COUNTY	ROUTE	POST MILES TOTAL PROJECT	SHEET No.	TOTAL SHEETS
12	Ora	57	12.2/15.2		

FOR EARTHWORK DEVELOPMENT ONLY

...\d0282599\Cross_Sections.dgn

EA 0F0401

SCALE: Horiz 1"=20'
Vert 1"=10'

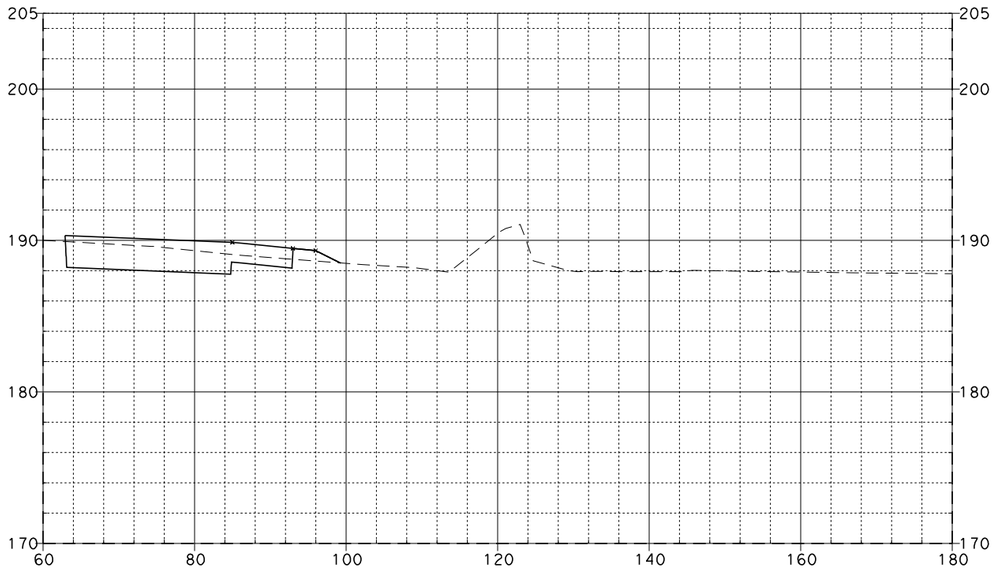

335+58.14

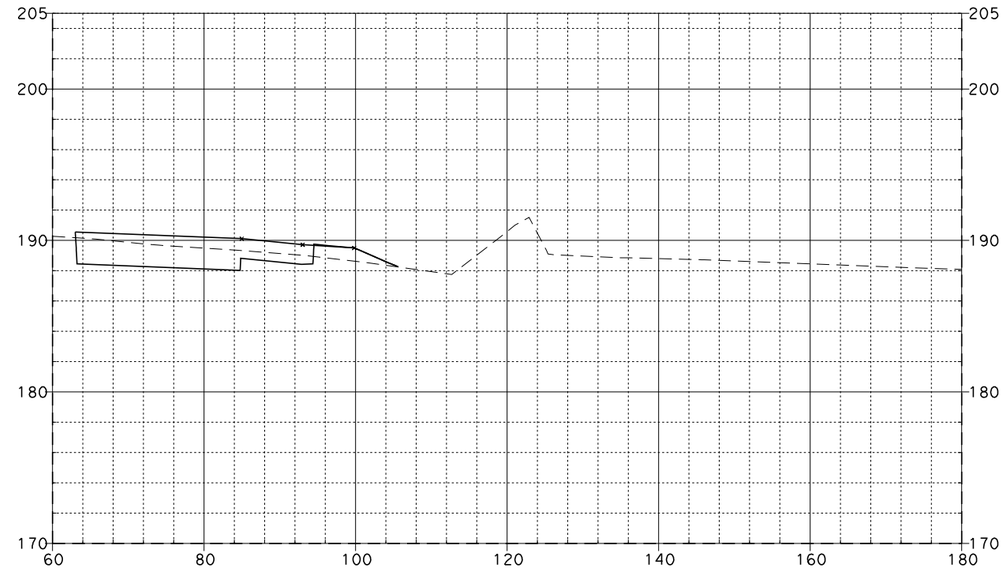

336+45.00

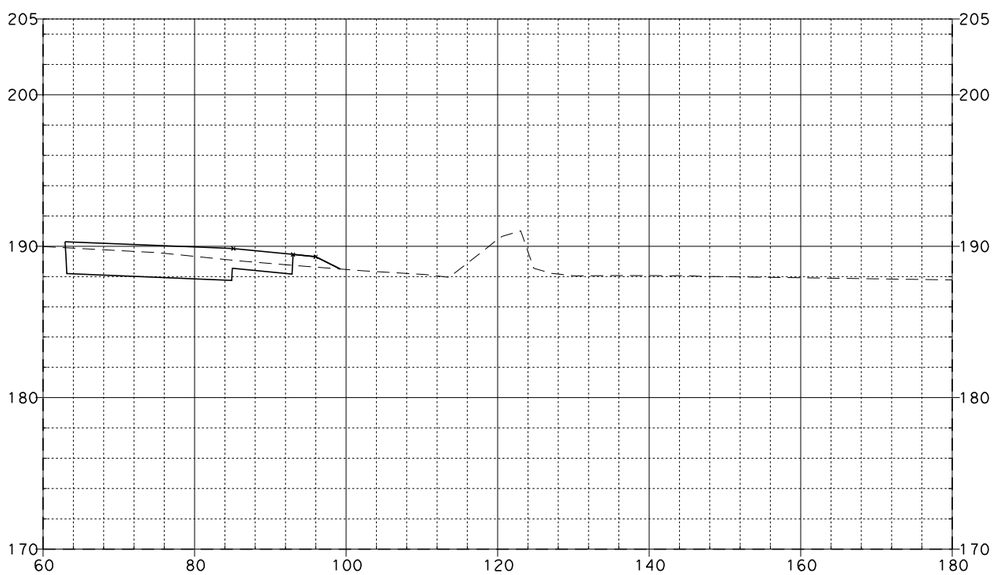

335+50.00

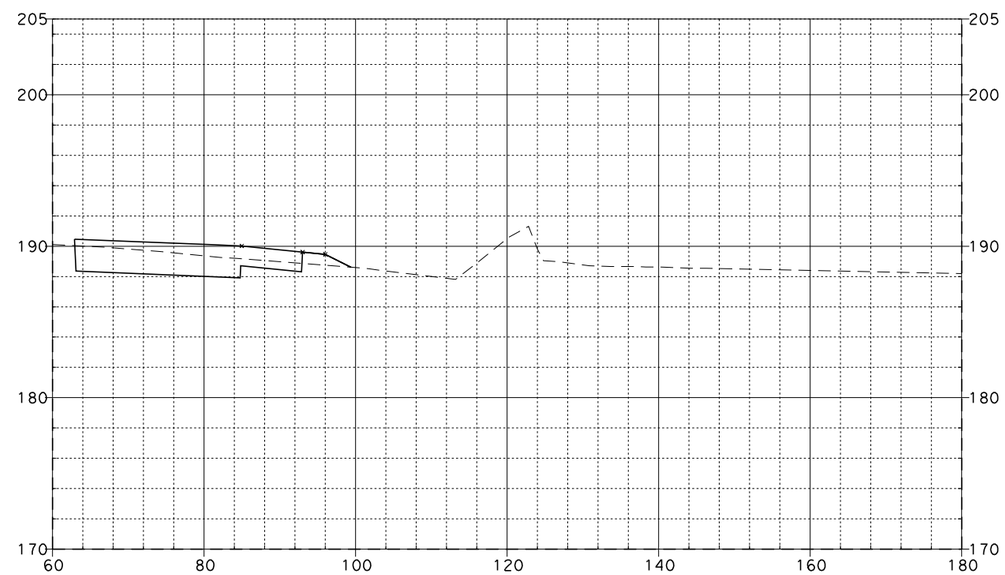

336+00.00

SR-57 MAINLINE

08\03\11

Dist	COUNTY	ROUTE	POST MILES TOTAL PROJECT	SHEET No.	TOTAL SHEETS
12	Ora	57	12.2/15.2		

FOR EARTHWORK DEVELOPMENT ONLY

...\d0282599\Cross_Sections.dgn

EA 0F0401

SCALE: Horiz 1"=20'
Vert 1"=10'

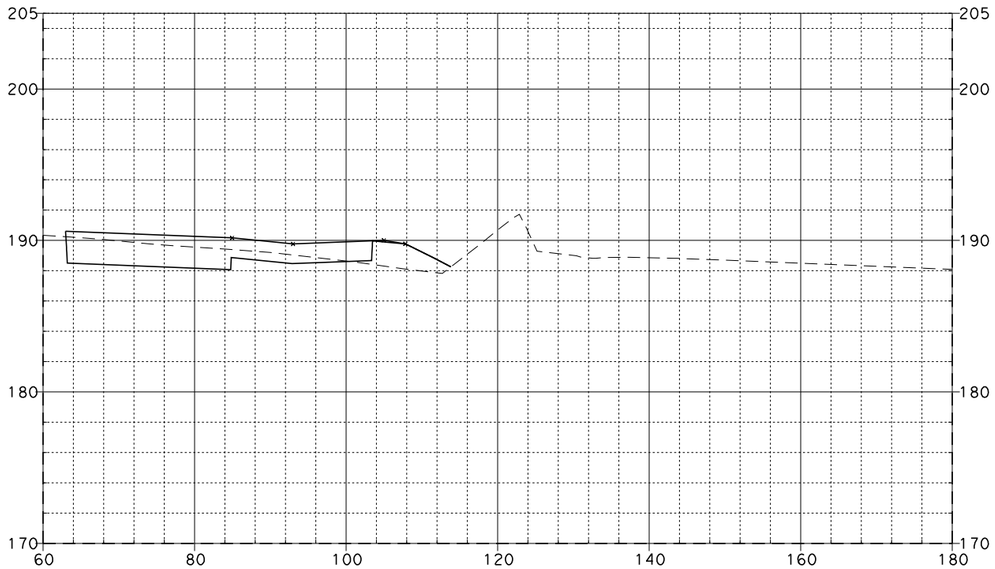

336+65.00

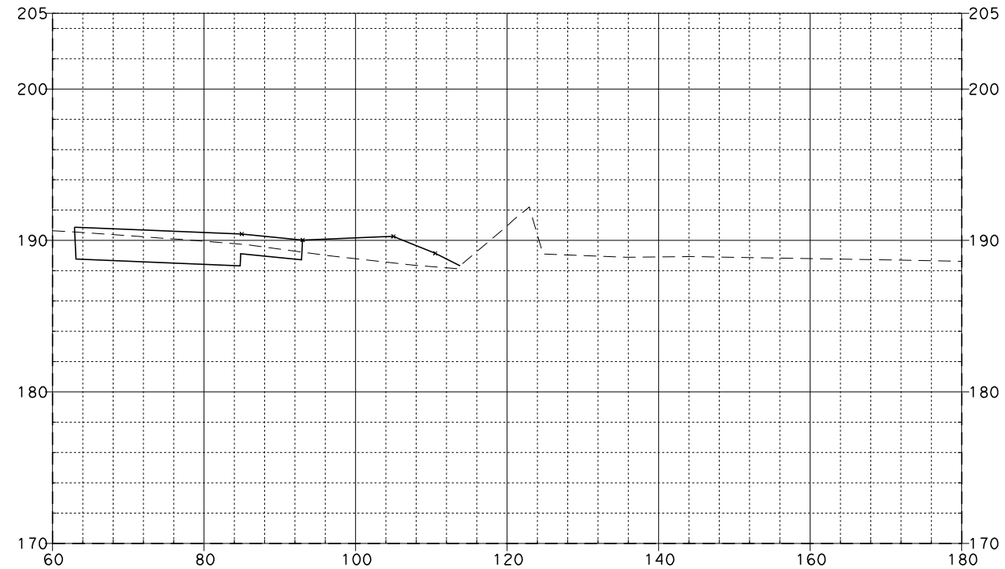

337+50.00

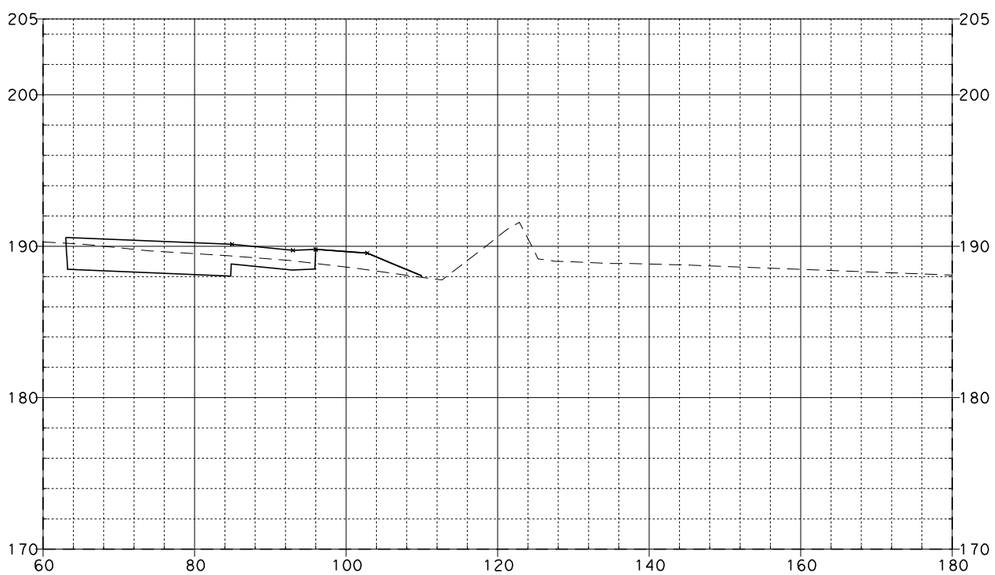

336+50.00

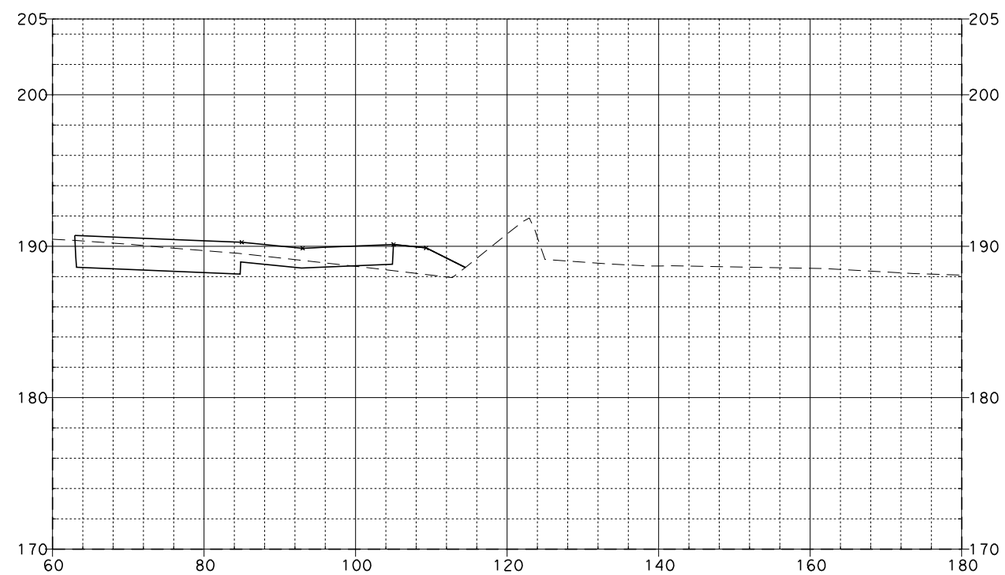

337+00.00

SR-57 MAINLINE

08\03\11

Dist	COUNTY	ROUTE	POST MILES TOTAL PROJECT	SHEET No.	TOTAL SHEETS
12	Ora	57	12.2/15.2		

FOR EARTHWORK DEVELOPMENT ONLY

...\d0282599\Cross_Sections.dgn

EA 0F0401

SCALE: Horiz 1"=20'
Vert 1"=10'

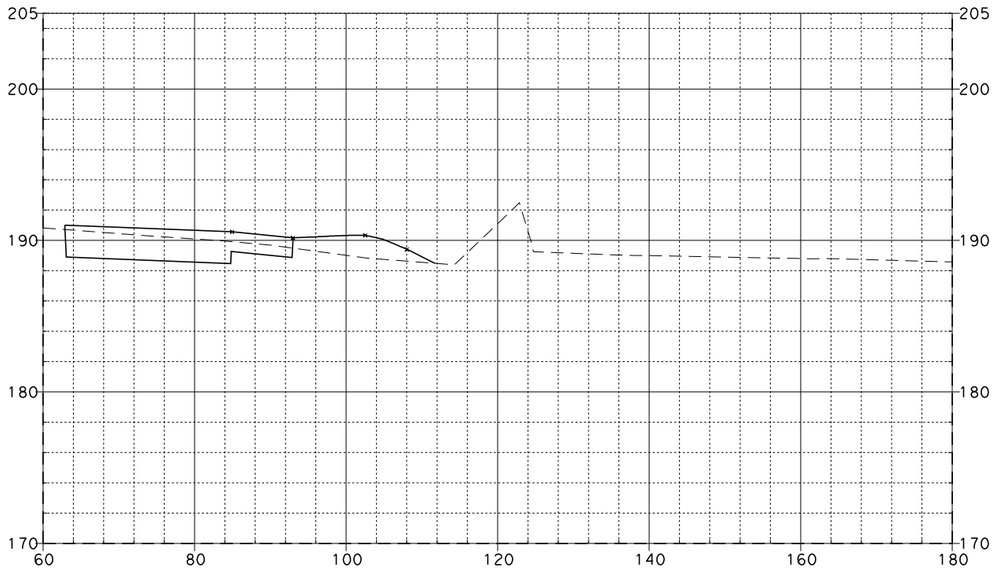

338+00.00

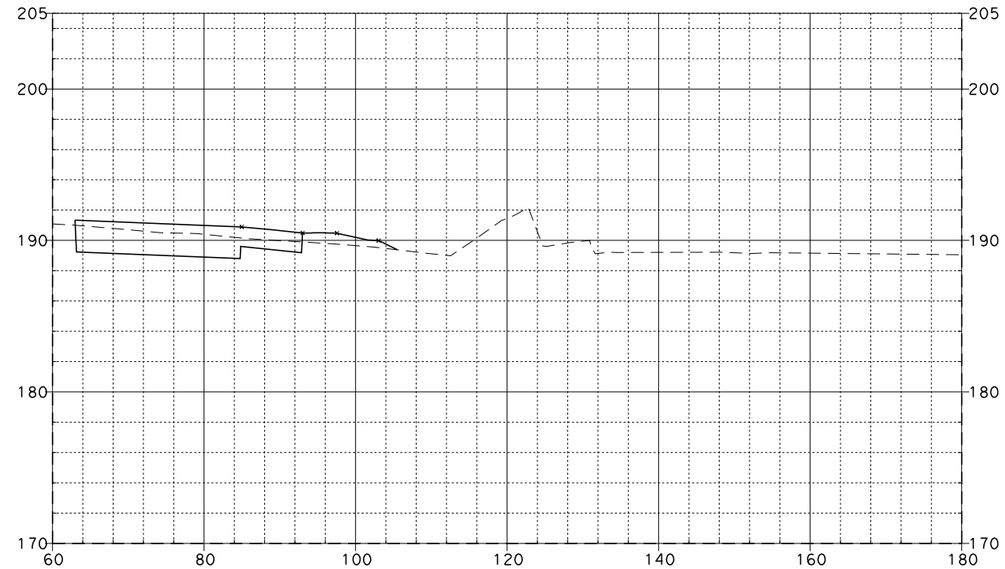

339+00.00

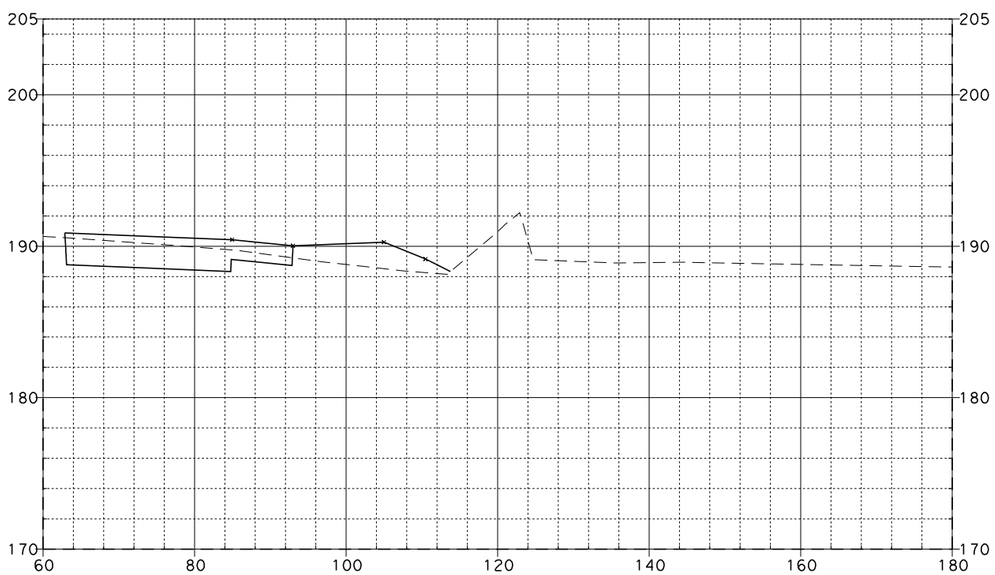

337+50.63

SR-57 MAINLINE

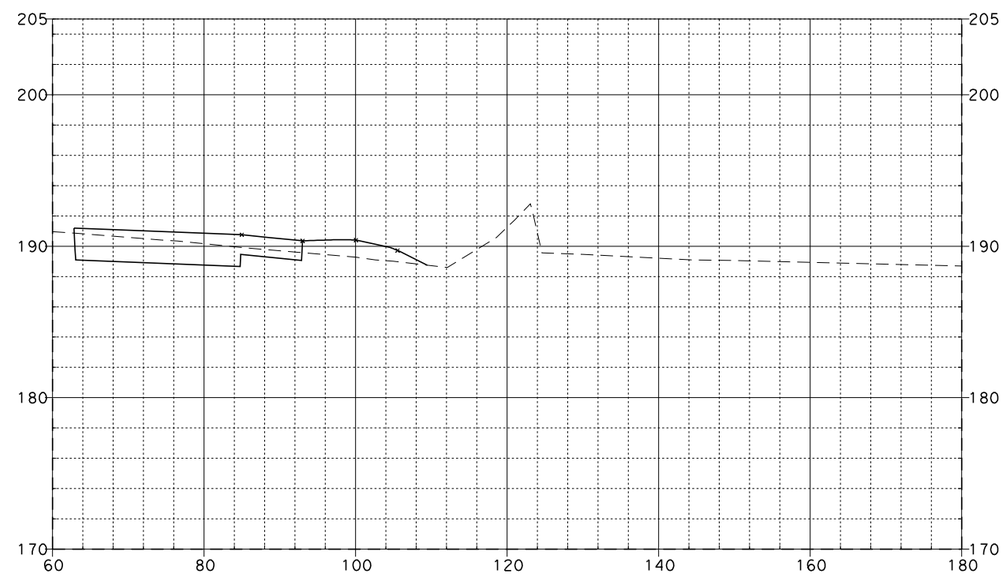

338+50.00

08\03\11

Dist	COUNTY	ROUTE	POST MILES TOTAL PROJECT	SHEET No.	TOTAL SHEETS
12	Ora	57	12.2/15.2		

FOR EARTHWORK DEVELOPMENT ONLY

...\d0282599\Cross_Sections.dgn

EA 0F0401

SCALE: Horiz 1"=20'
Vert 1"=10'

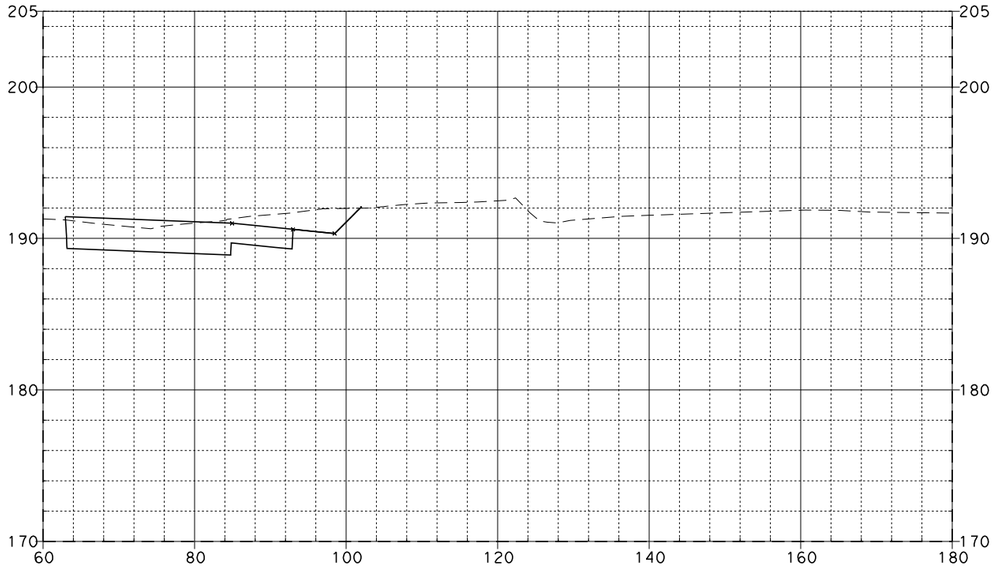

339+90.63

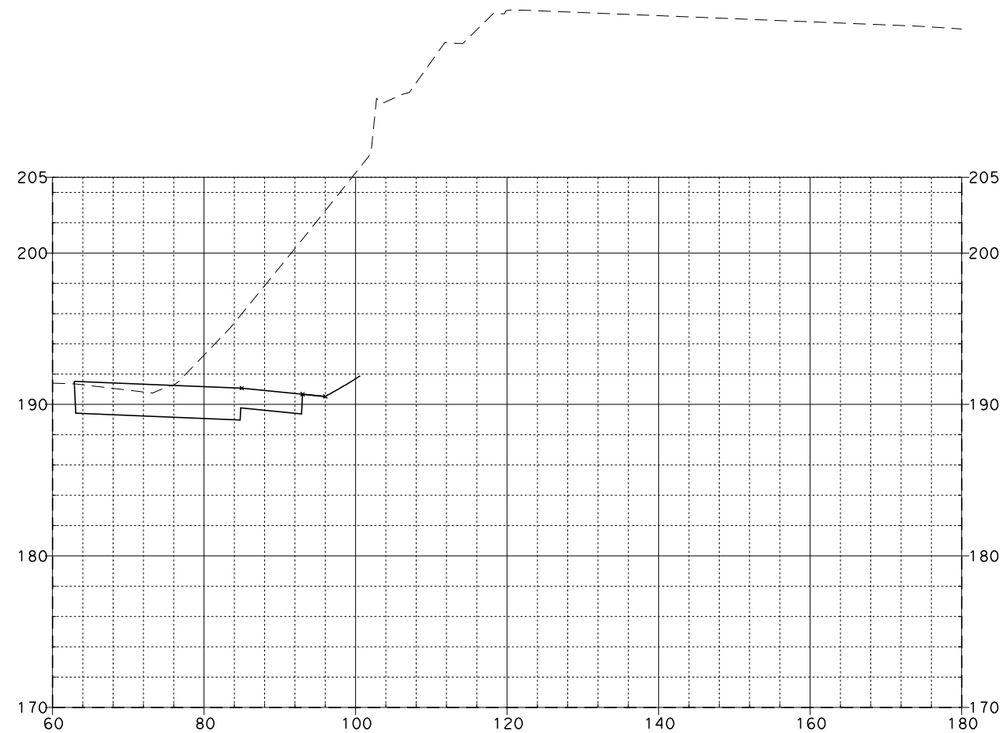

340+50.00

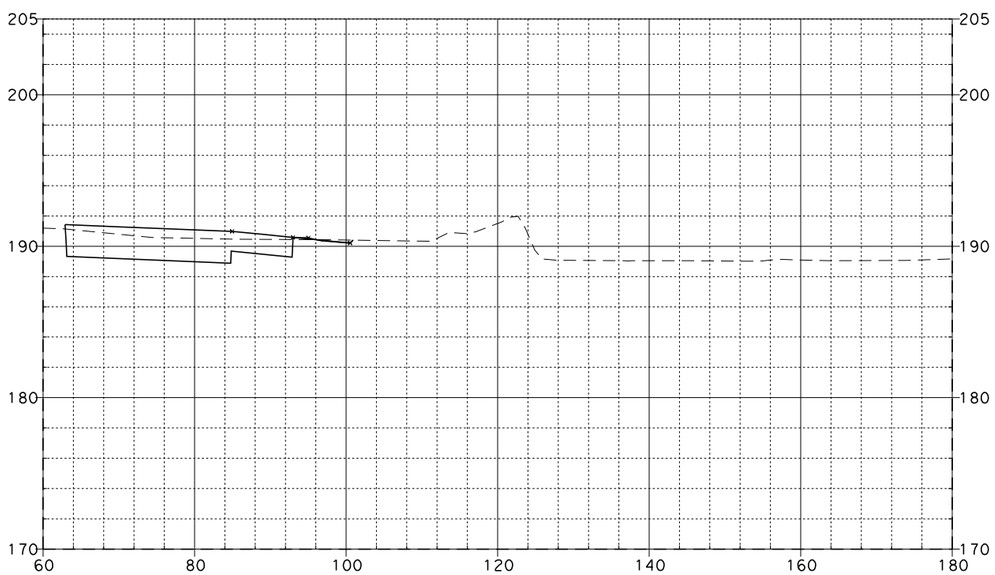

339+50.00

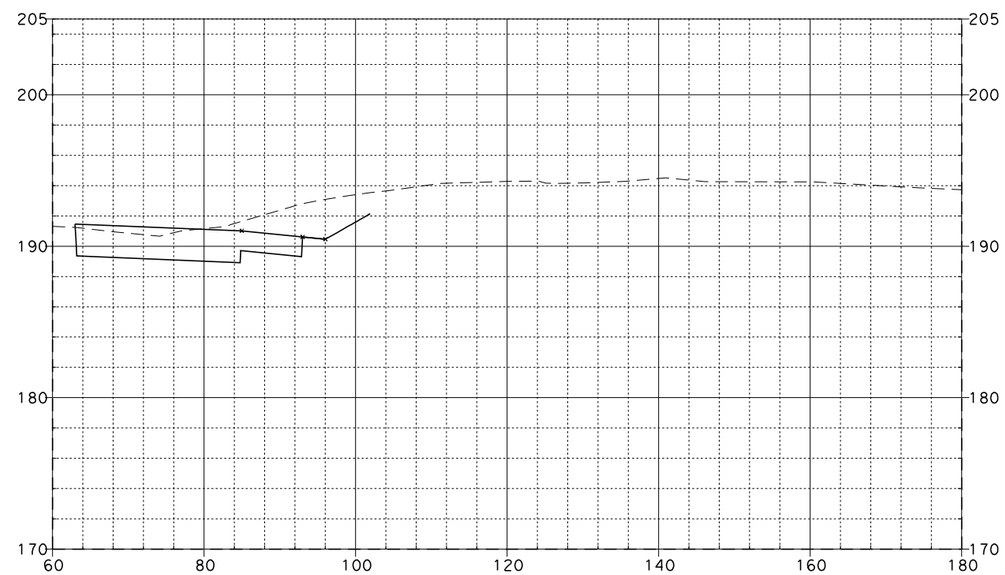

340+00.00

SR-57 MAINLINE

08\03\11

Dist	COUNTY	ROUTE	POST MILES TOTAL PROJECT	SHEET No.	TOTAL SHEETS
12	Ora	57	12.2/15.2		

FOR EARTHWORK DEVELOPMENT ONLY

...\d0282599\Cross_Sections.dgn

EA 0F0401

SCALE: Horiz 1"=20'
Vert 1"=10'

08\03\11

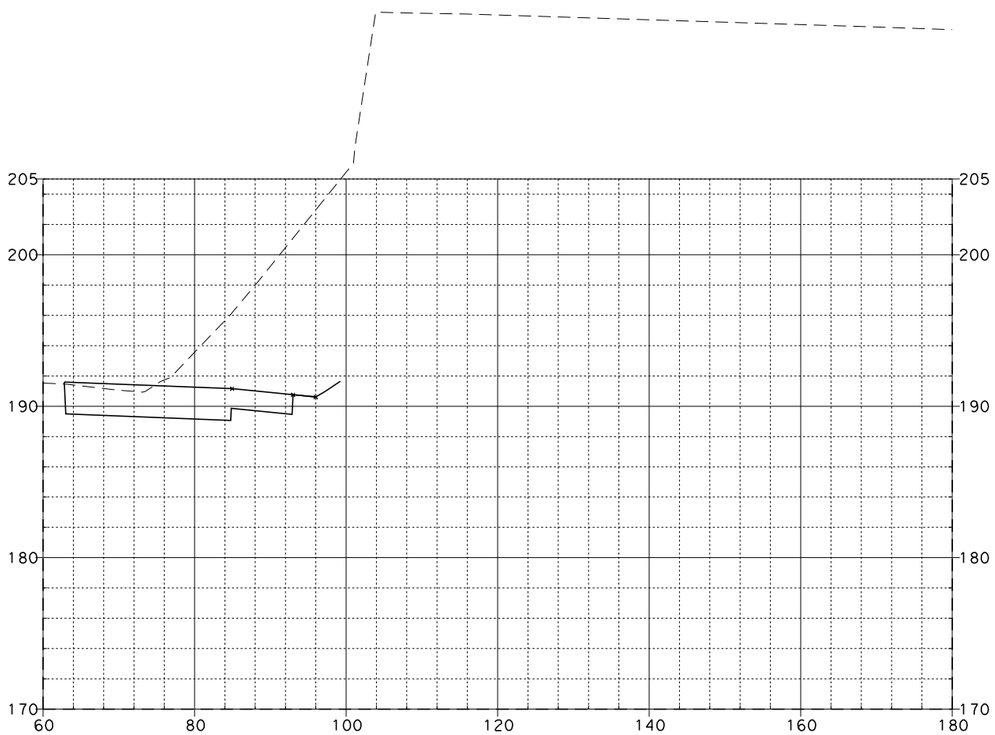

341+00.00

SR-57 MAINLINE

Dist	COUNTY	ROUTE	POST MILES TOTAL PROJECT	SHEET No.	TOTAL SHEETS
12	Ora	57	12.2/15.2		

FOR EARTHWORK DEVELOPMENT ONLY

...\d0282599\Cross_Sections.dgn

EA 0F0401

SCALE: Horiz 1"=20'
Vert 1"=10'

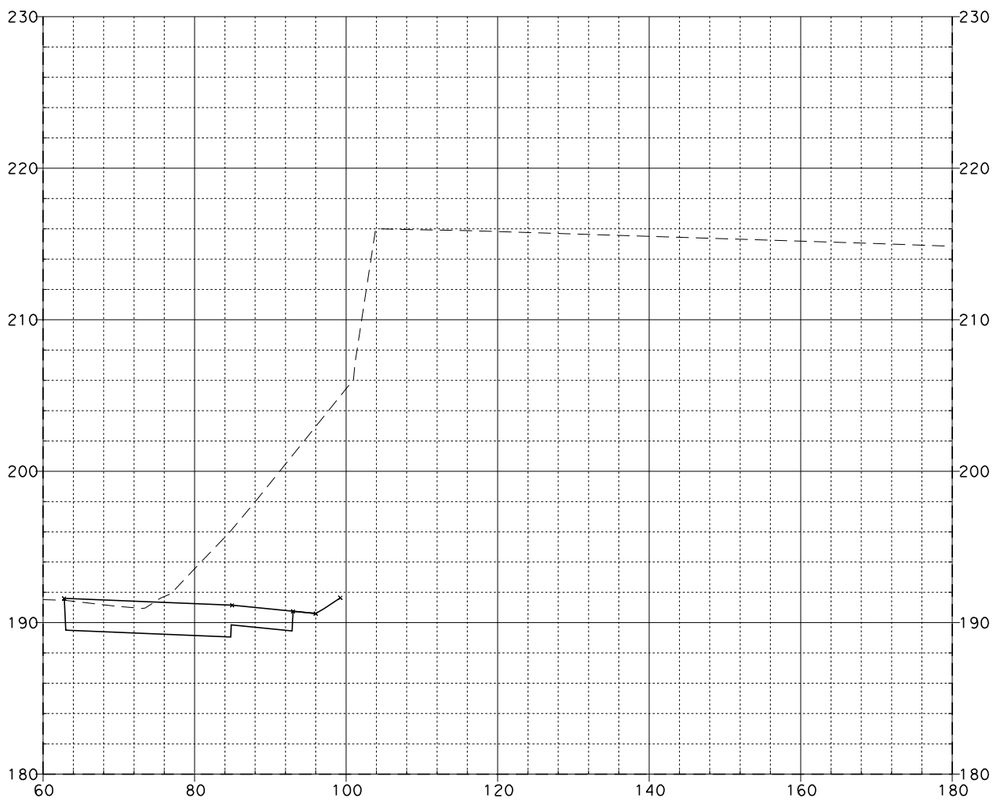

341+00.00

SR-57 MAINLINE

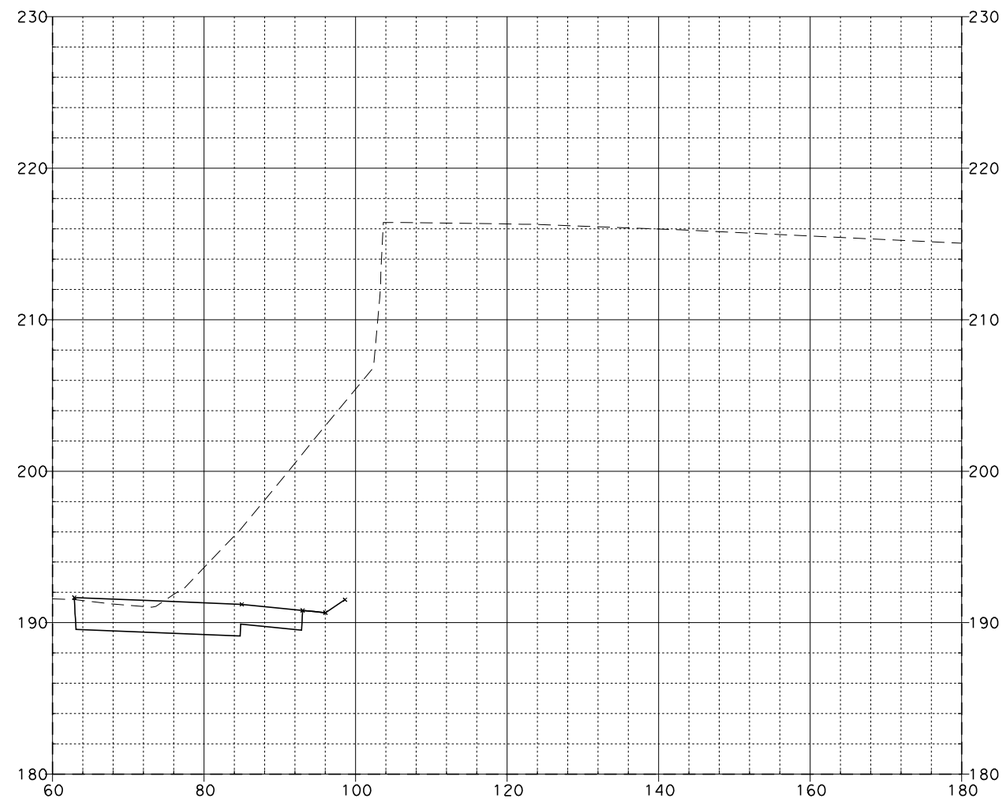

341+25.00

08\03\11

Dist	COUNTY	ROUTE	POST MILES TOTAL PROJECT	SHEET No.	TOTAL SHEETS
12	Ora	57	12.2/15.2		

FOR EARTHWORK DEVELOPMENT ONLY

...\d0282599\Cross_Sections.dgn

EA 0F0401

SCALE: Horiz 1"=20'
Vert 1"=10'

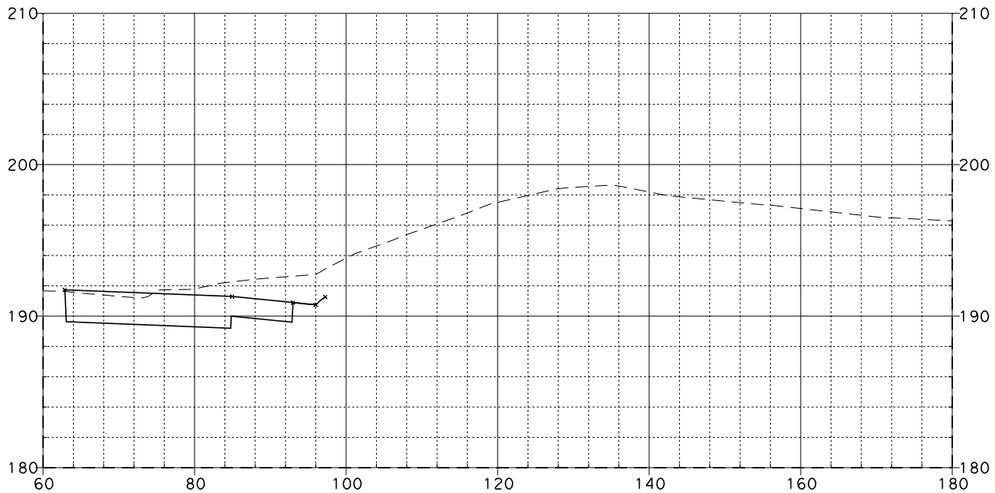

341+75.00

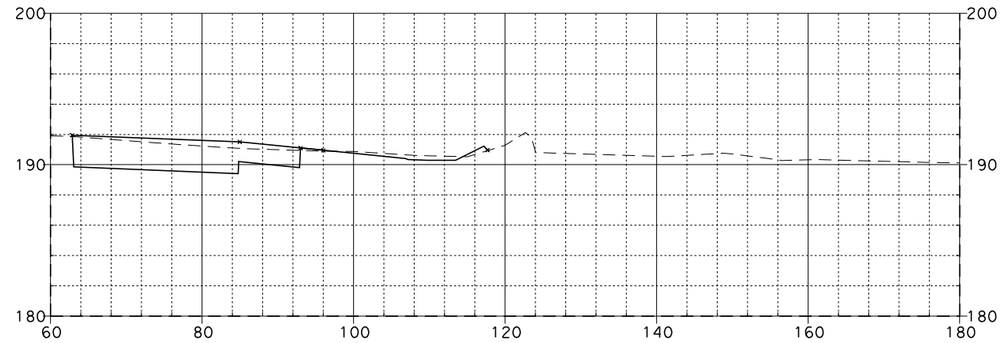

342+50.00

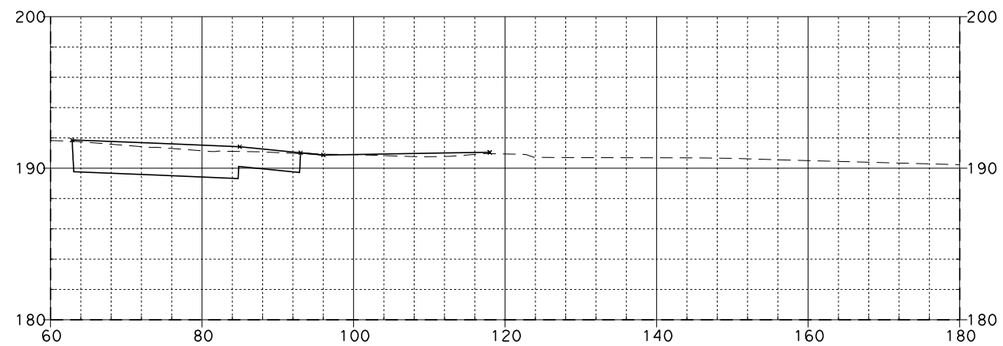

342+25.00

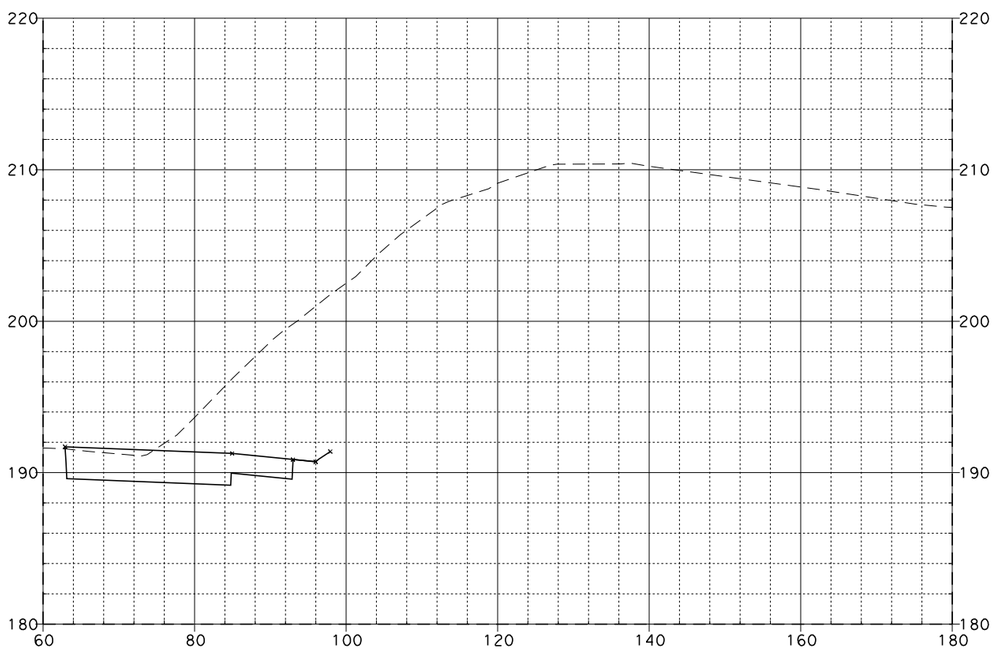

341+50.00

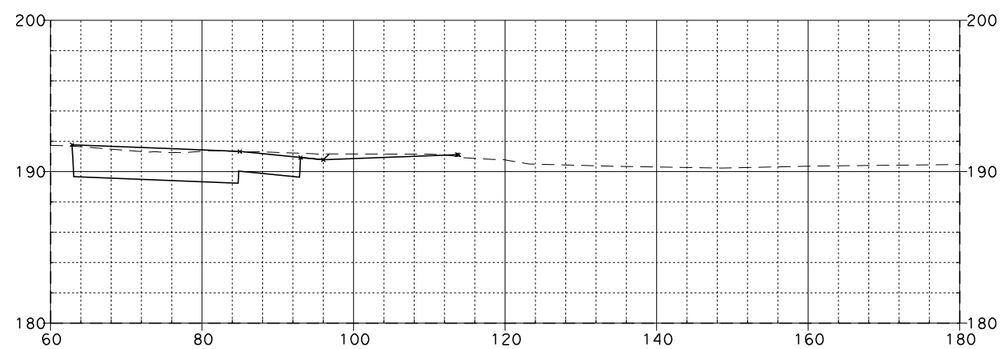

342+00.00

SR-57 MAINLINE

08\03\11

Dist	COUNTY	ROUTE	POST MILES TOTAL PROJECT	SHEET NO.	TOTAL SHEETS
12	Ora	57	12.2/15.2		

FOR EARTHWORK DEVELOPMENT ONLY

...\d0282599\Cross_Sections.dgn

EA 0F0401

SCALE: Horiz 1"=20'
Vert 1"=10'

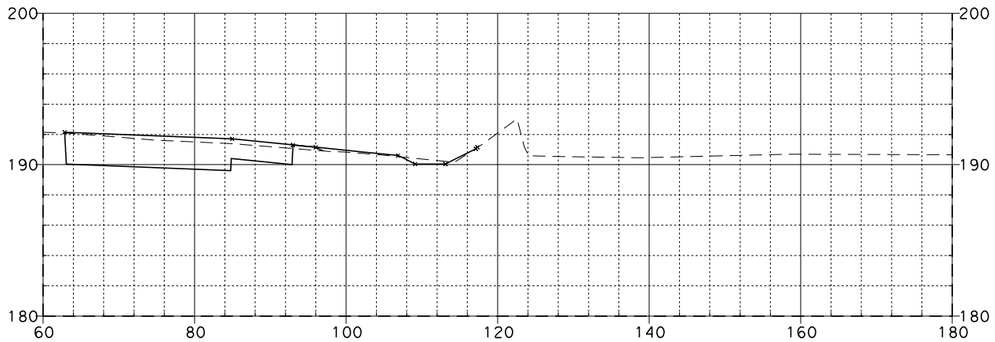

343+25.00

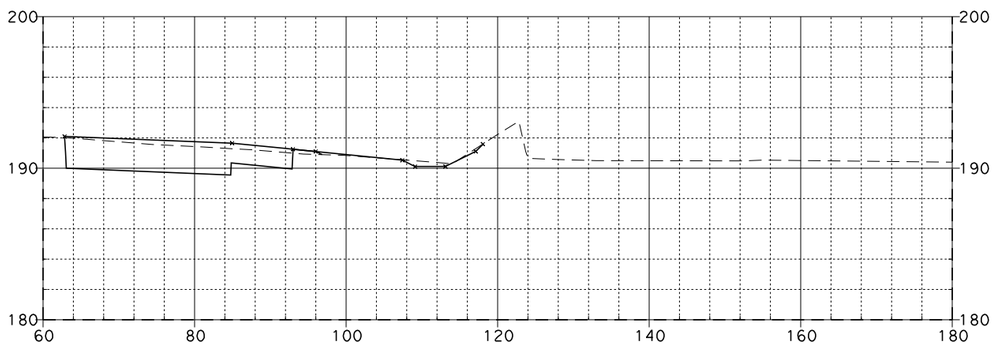

343+00.00

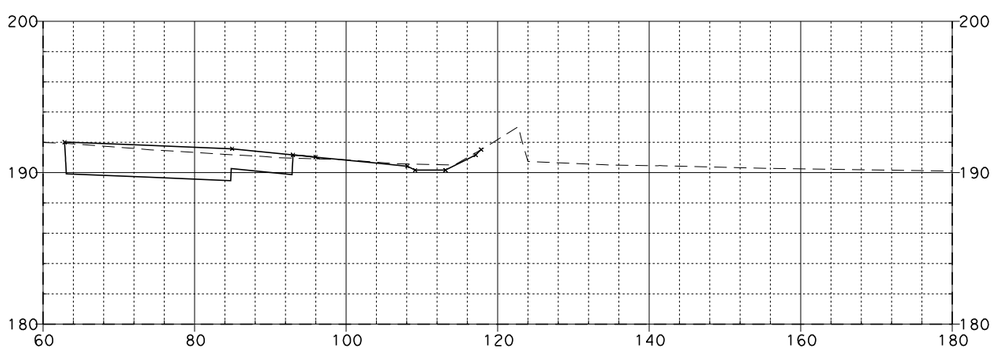

342+75.00

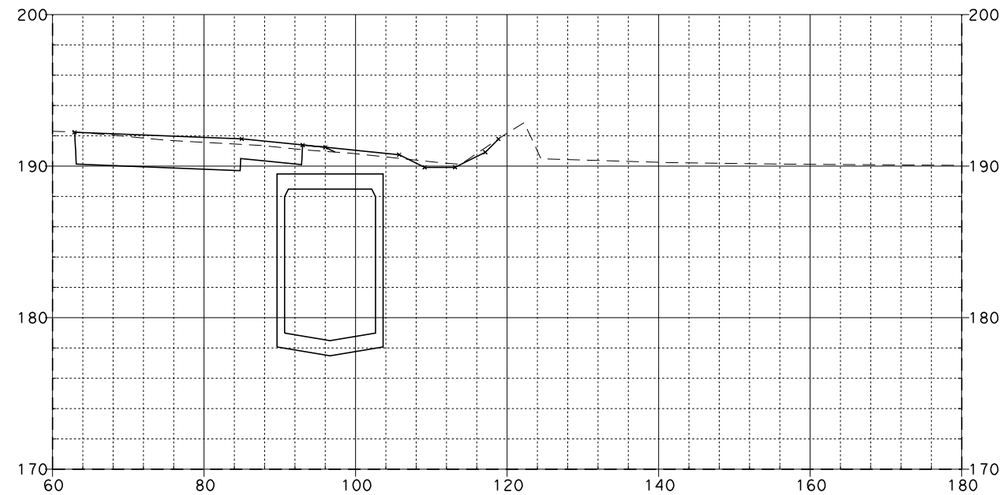

343+75.00

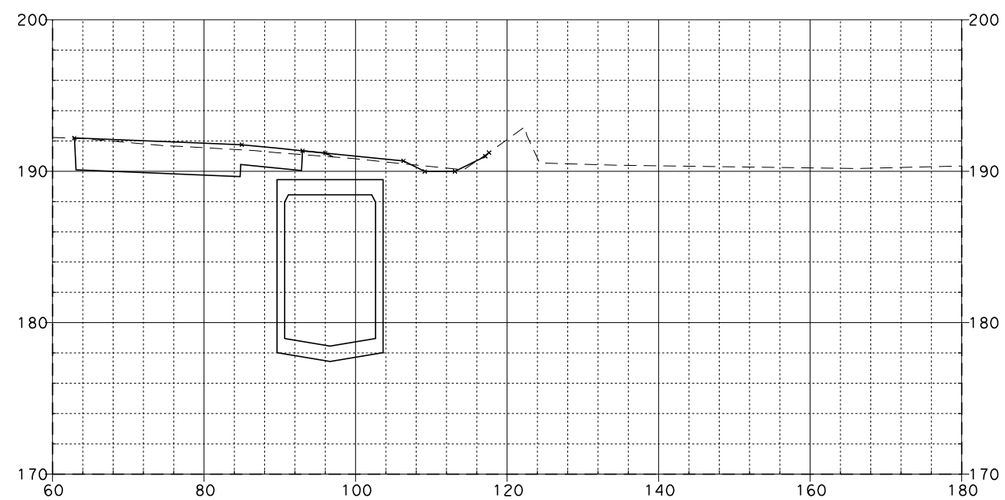

343+50.00

SR-57 MAINLINE

08\03\11

Dist	COUNTY	ROUTE	POST MILES TOTAL PROJECT	SHEET No.	TOTAL SHEETS
12	Ora	57	12.2/15.2		

FOR EARTHWORK DEVELOPMENT ONLY

...\d0282599\Cross_Sections.dgn

EA 0F0401

SCALE: Horiz 1"=20'
Vert 1"=10'

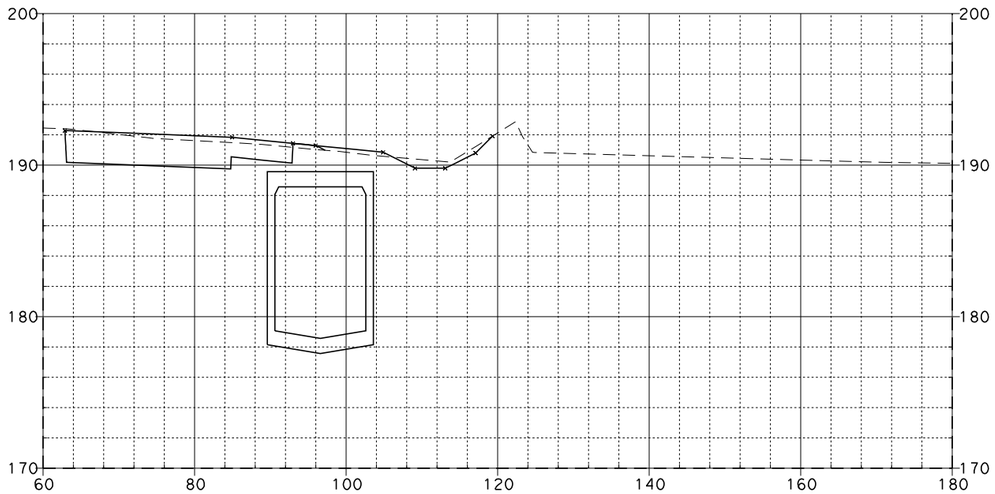

344+25.00

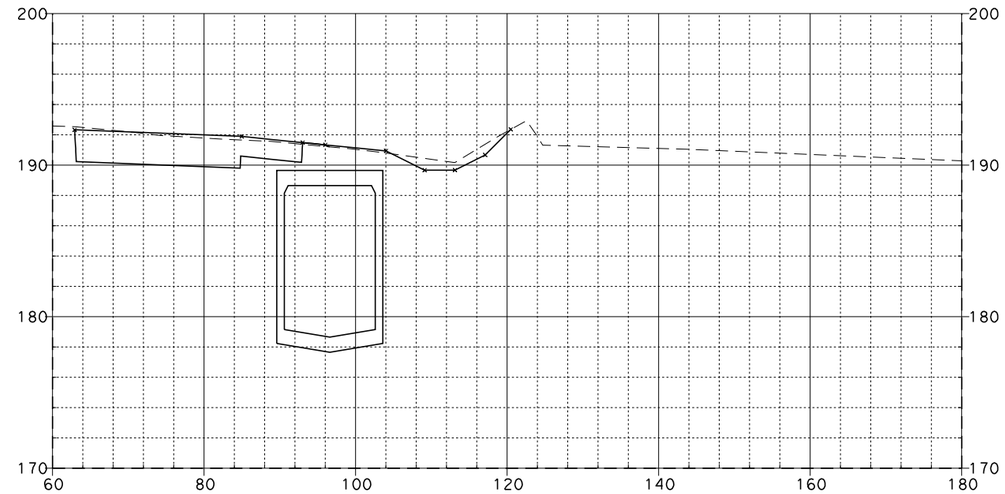

344+75.00

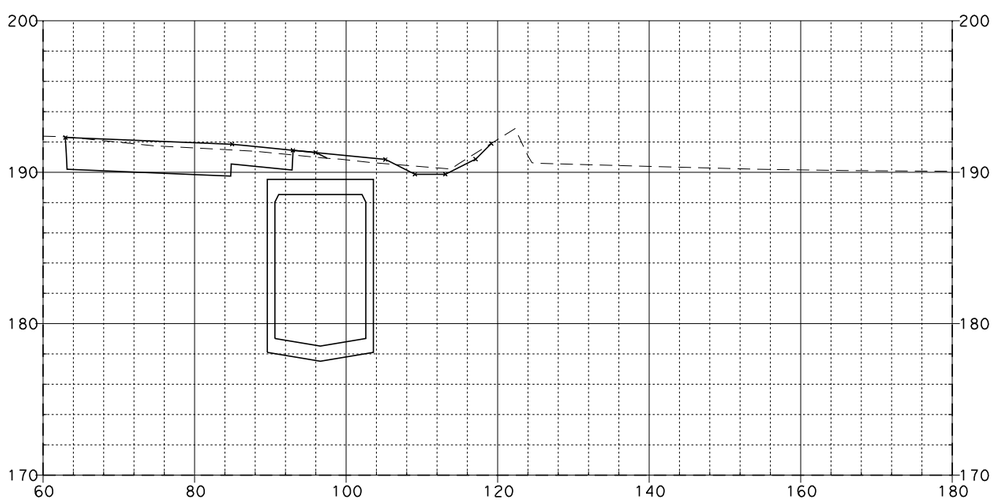

344+00.00

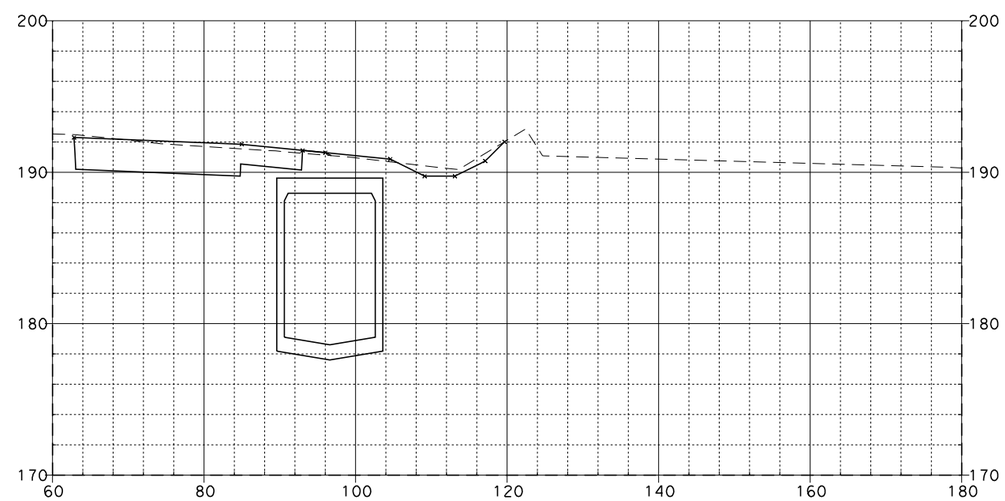

344+50.00

SR-57 MAINLINE

08\03\11

Dist	COUNTY	ROUTE	POST MILES TOTAL PROJECT	SHEET NO.	TOTAL SHEETS
12	Ora	57	12.2/15.2		

FOR EARTHWORK DEVELOPMENT ONLY

...\d0282599\Cross_Sections.dgn

EA 0F0401

SCALE: Horiz 1"=20'
Vert 1"=10'

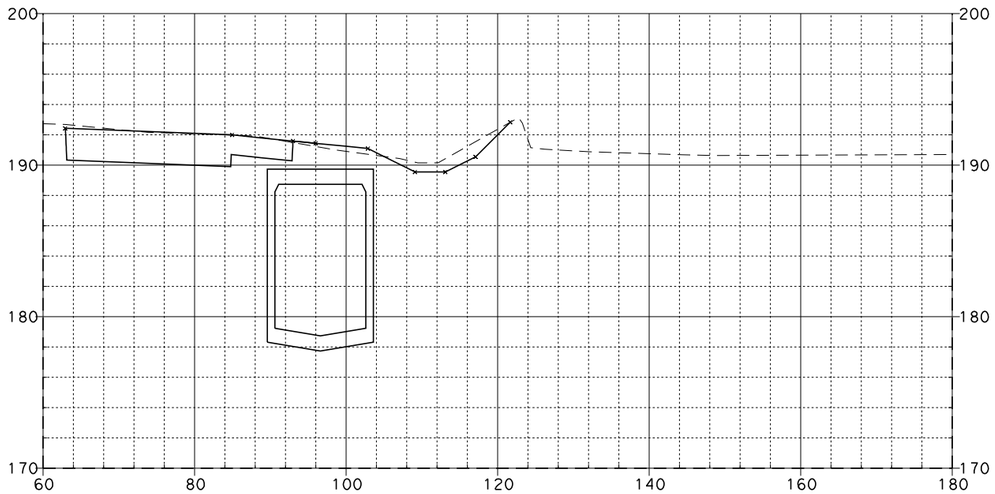

345+25.00

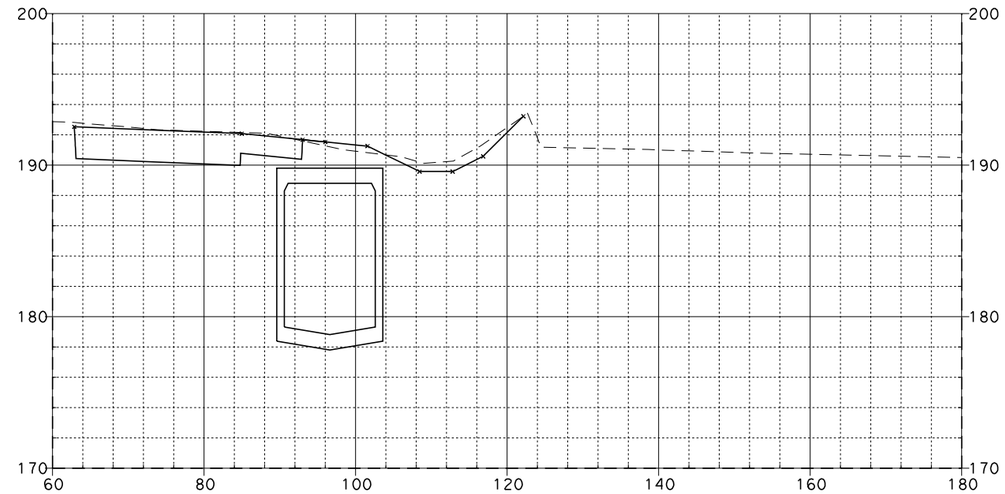

345+75.00

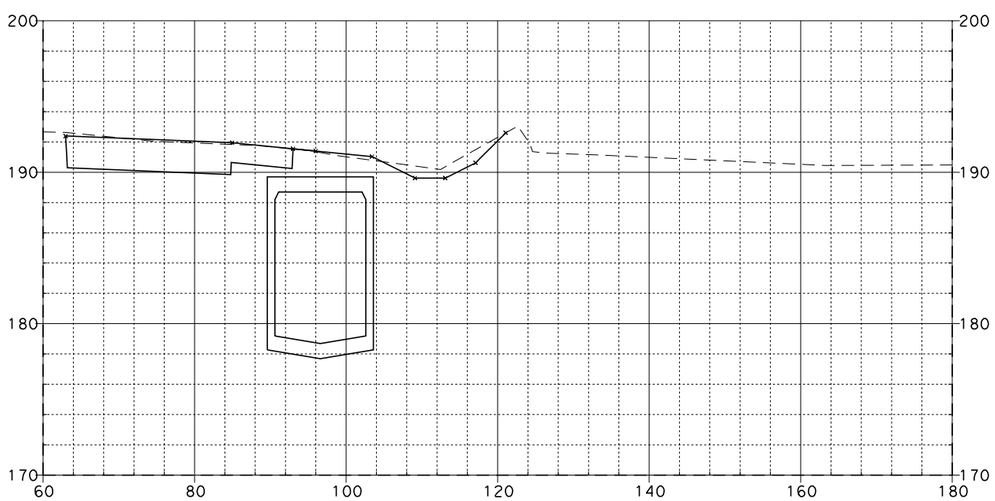

345+00.00

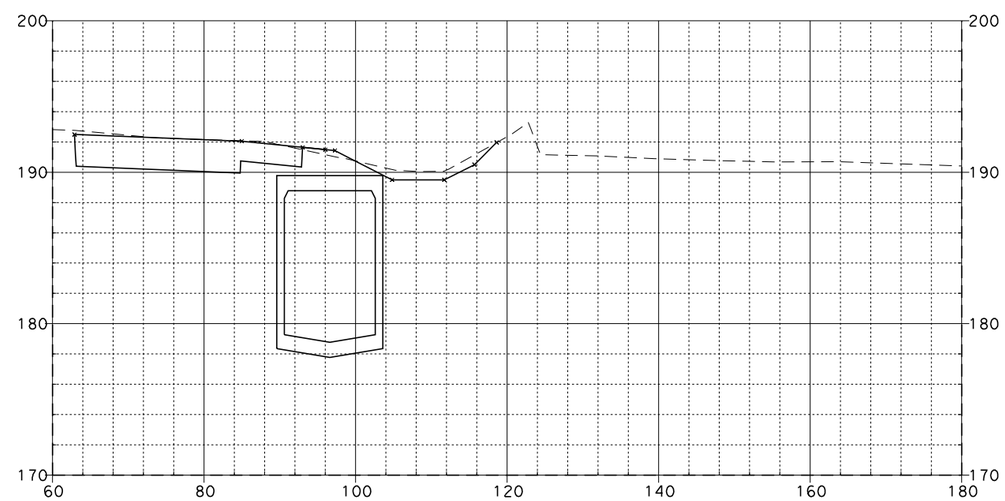

345+50.00

SR-57 MAINLINE

08\03\11

Dist	COUNTY	ROUTE	POST MILES TOTAL PROJECT	SHEET NO.	TOTAL SHEETS
12	Ora	57	12.2/15.2		

FOR EARTHWORK DEVELOPMENT ONLY

...\d0282599\Cross_Sections.dgn

EA 0F0401

SCALE: Horiz 1"=20'
Vert 1"=10'

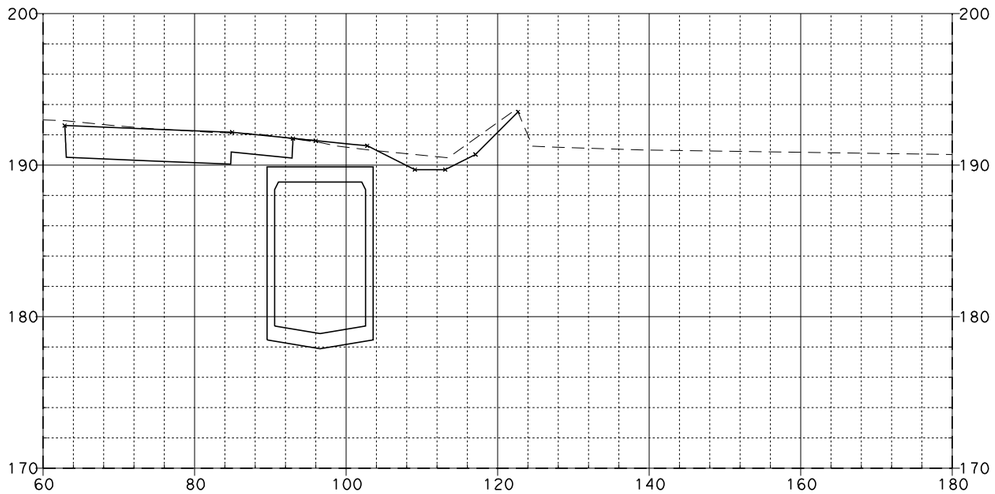

346+25.00

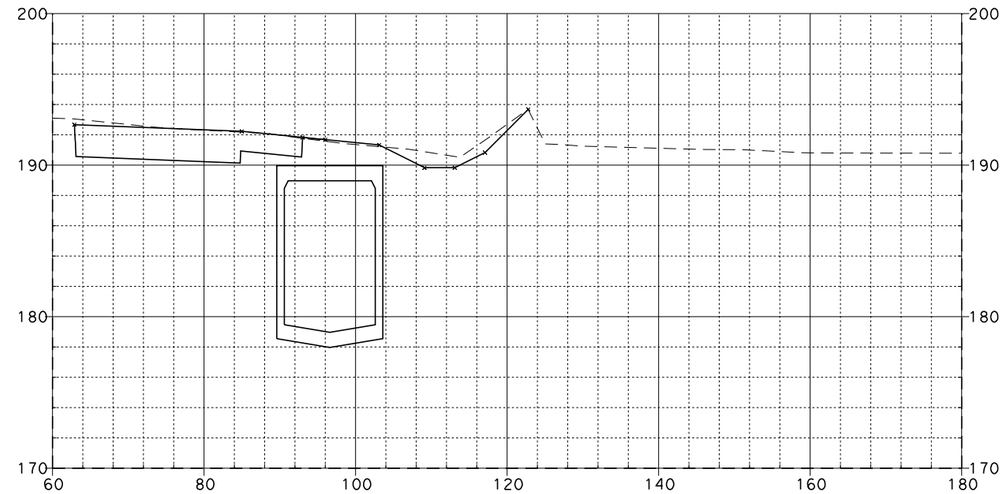

346+75.00

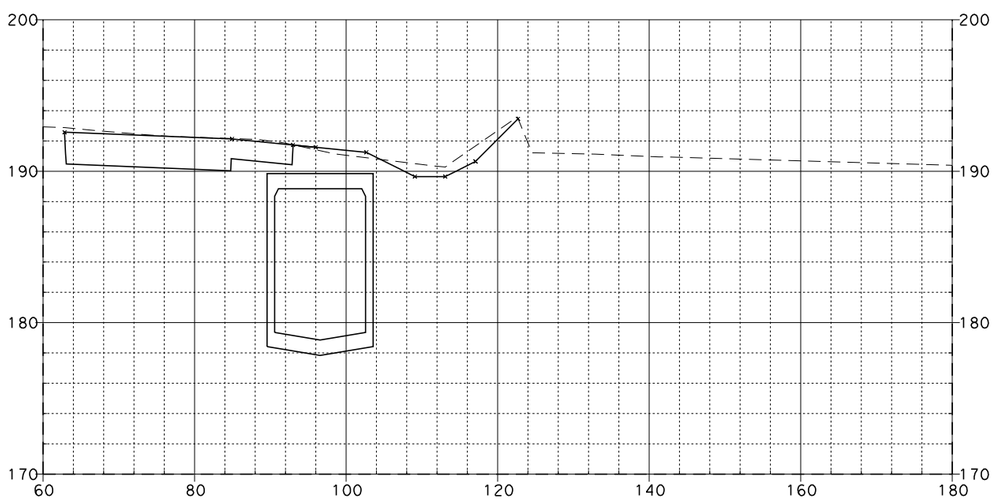

346+00.00

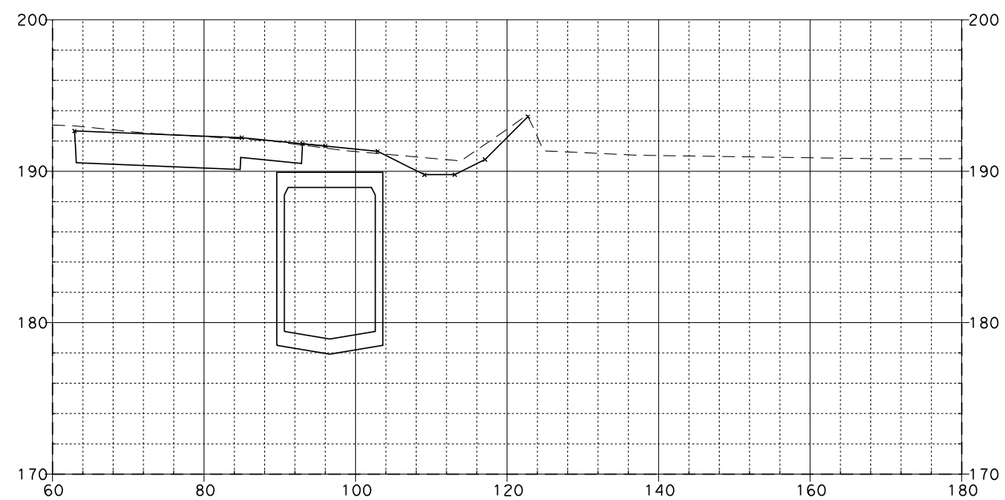

346+50.00

SR-57 MAINLINE

08\03\11

Dist	COUNTY	ROUTE	POST MILES TOTAL PROJECT	SHEET NO.	TOTAL SHEETS
12	Ora	57	12.2/15.2		

FOR EARTHWORK DEVELOPMENT ONLY

...\d0282599\Cross_Sections.dgn

EA 0F0401

SCALE: Horiz 1"=20'
Vert 1"=10'

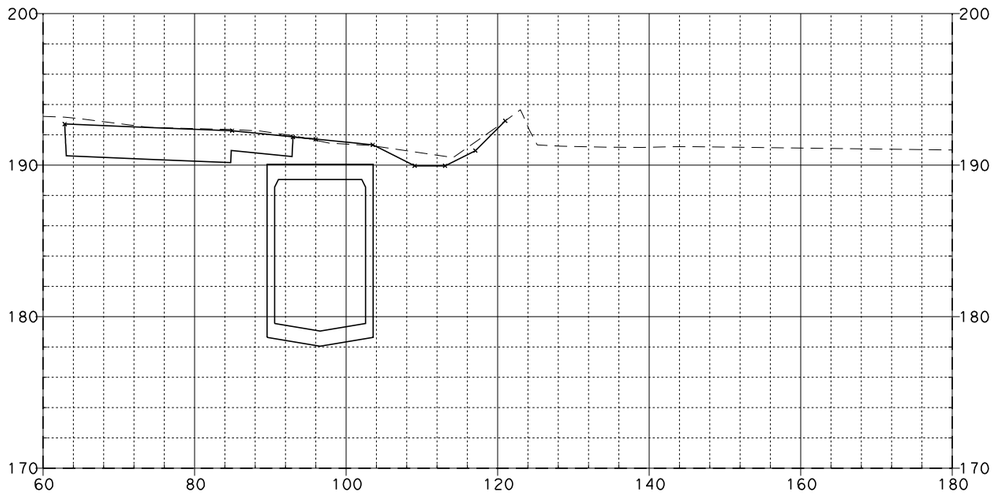

347+25.00

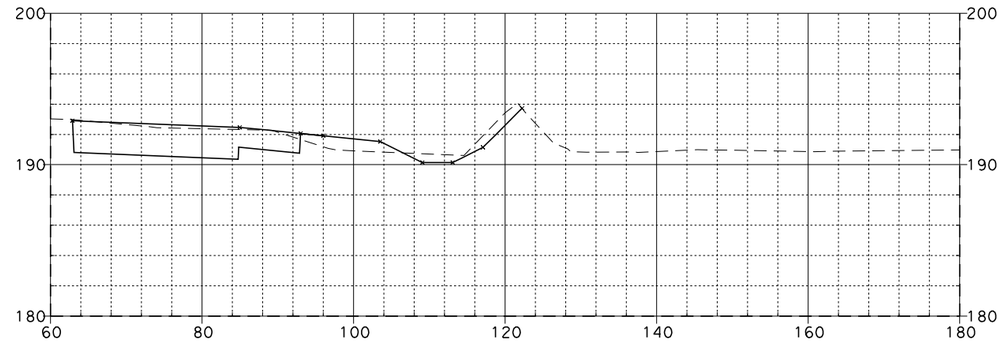

348+00.00

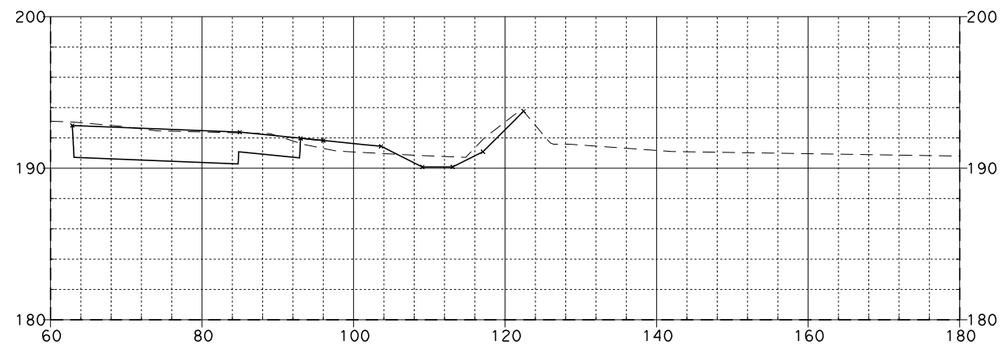

347+75.00

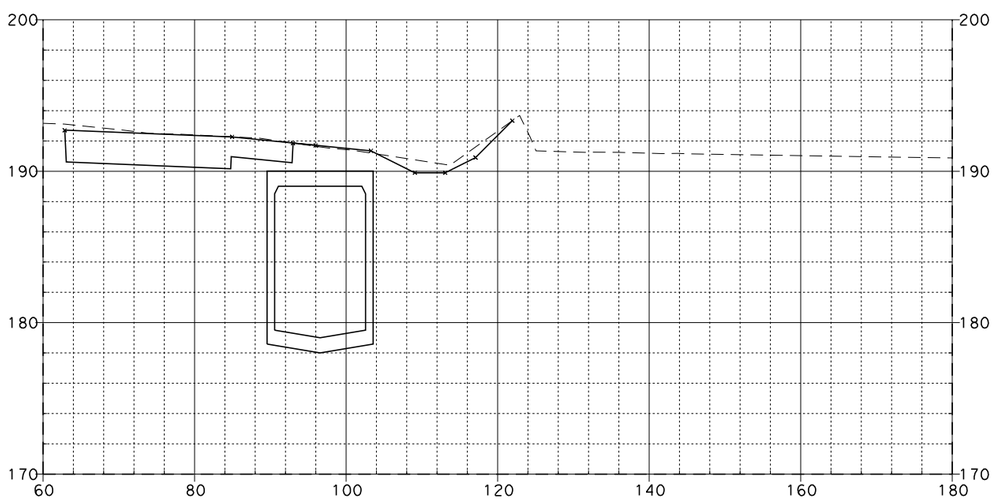

347+00.00

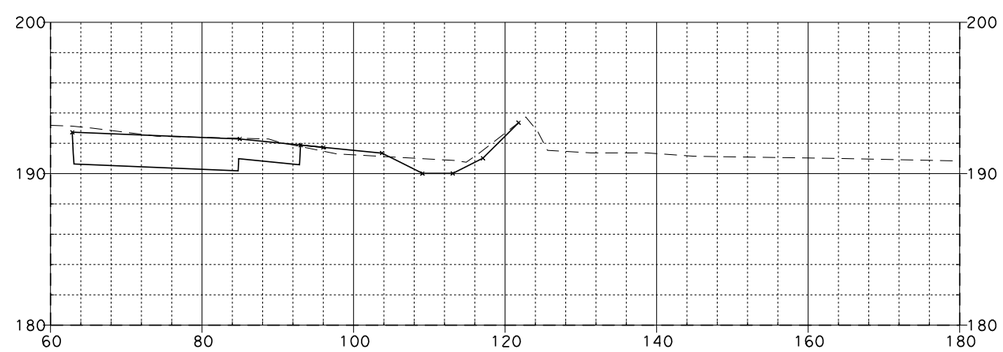

347+50.00

SR-57 MAINLINE

08\03\11

Dist	COUNTY	ROUTE	POST MILES TOTAL PROJECT	SHEET NO.	TOTAL SHEETS
12	Ora	57	12.2/15.2		

FOR EARTHWORK DEVELOPMENT ONLY

...\d0282599\Cross_Sections.dgn

EA 0F0401

SCALE: Horiz 1"=20'
Vert 1"=10'

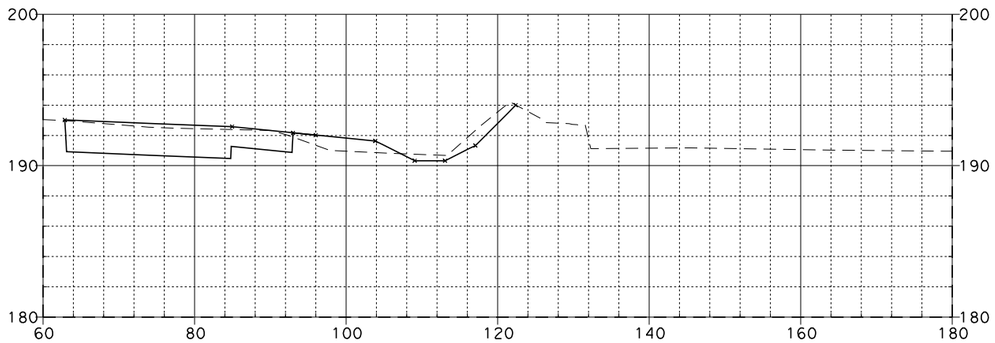

348+75.00

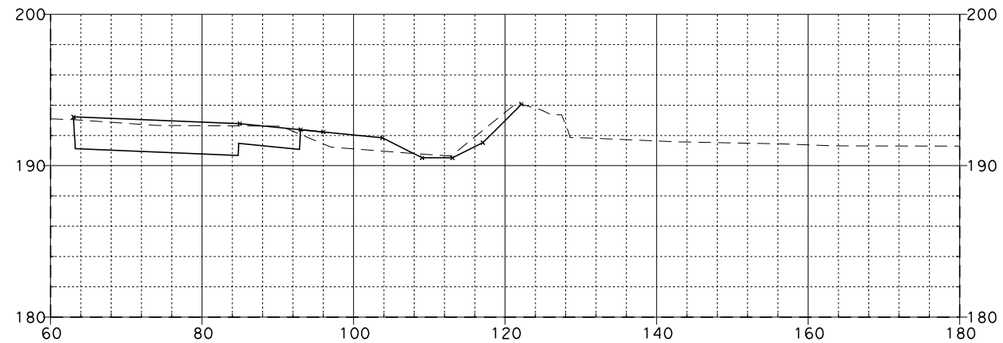

349+50.00

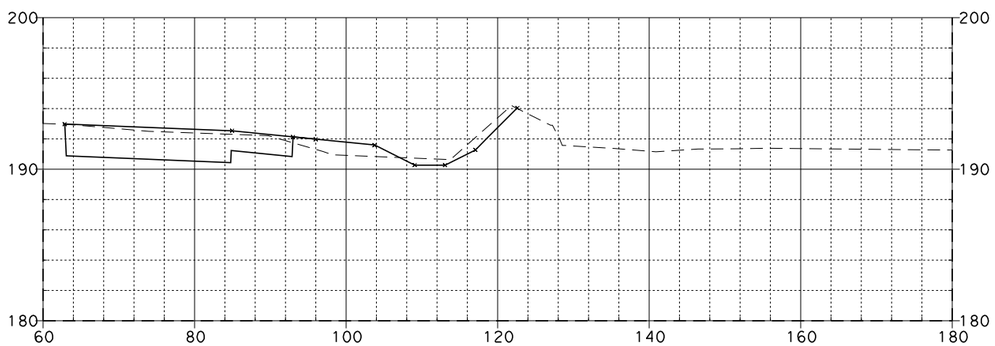

348+50.00

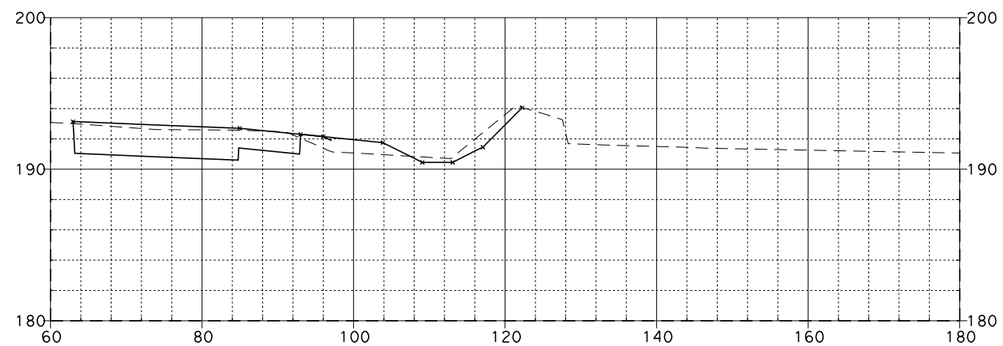

349+25.00

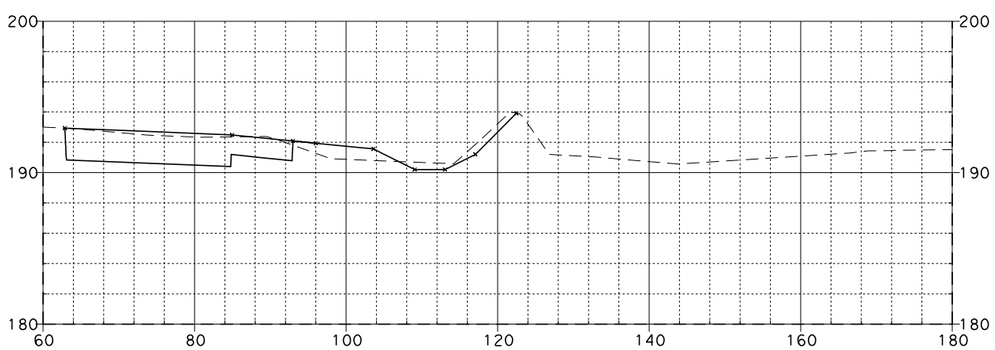

348+25.00

SR-57 MAINLINE

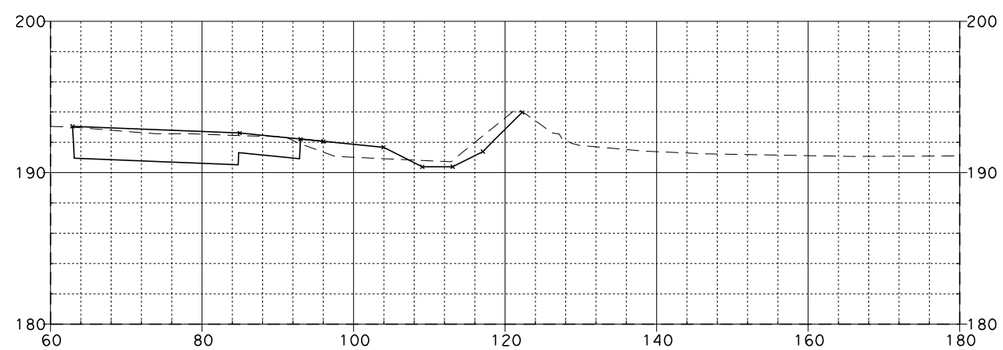

349+00.00

08\03\11

Dist	COUNTY	ROUTE	POST MILES TOTAL PROJECT	SHEET No.	TOTAL SHEETS
12	Ora	57	12.2/15.2		

FOR EARTHWORK DEVELOPMENT ONLY

...\d0282599\Cross_Sections.dgn

EA 0F0401

SCALE: Horiz 1"=20'
Vert 1"=10'

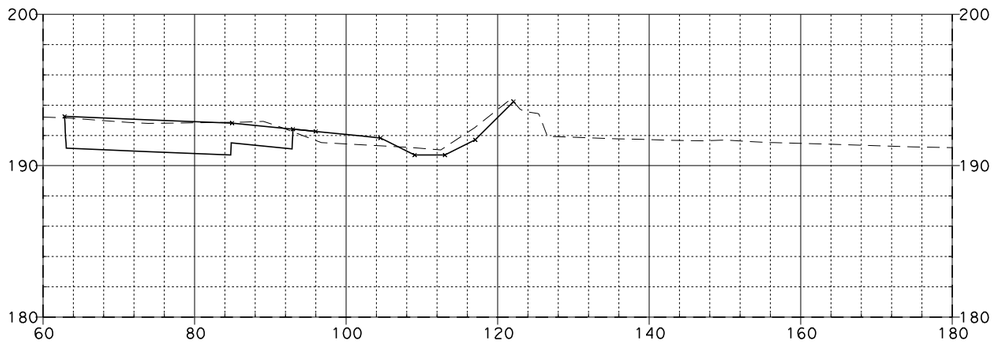

350+25.00

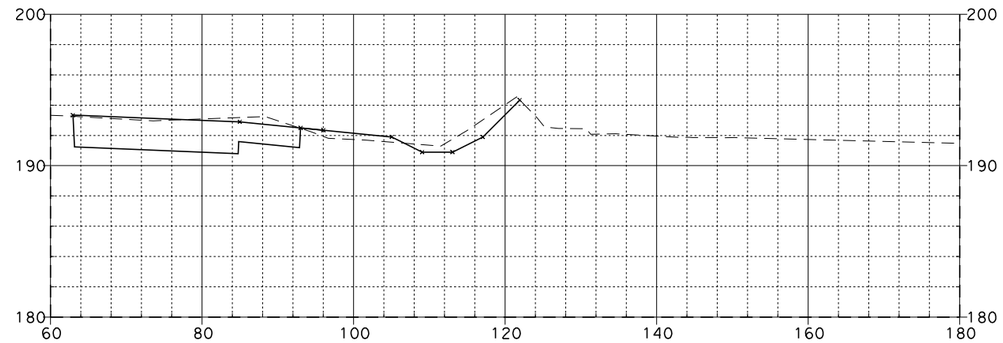

351+00.00

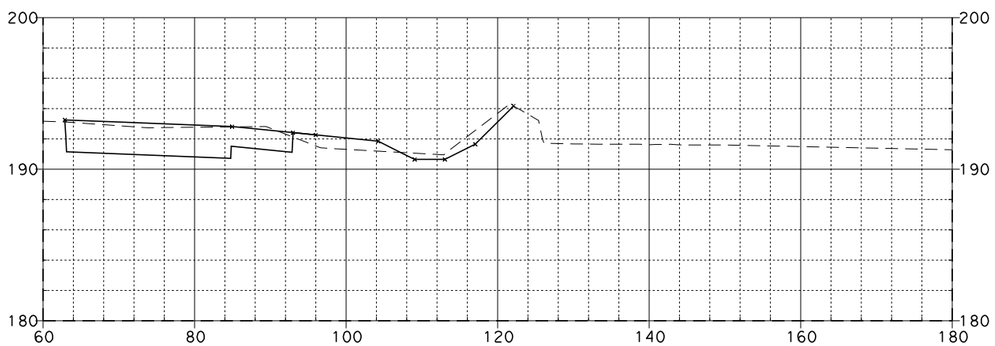

350+00.00

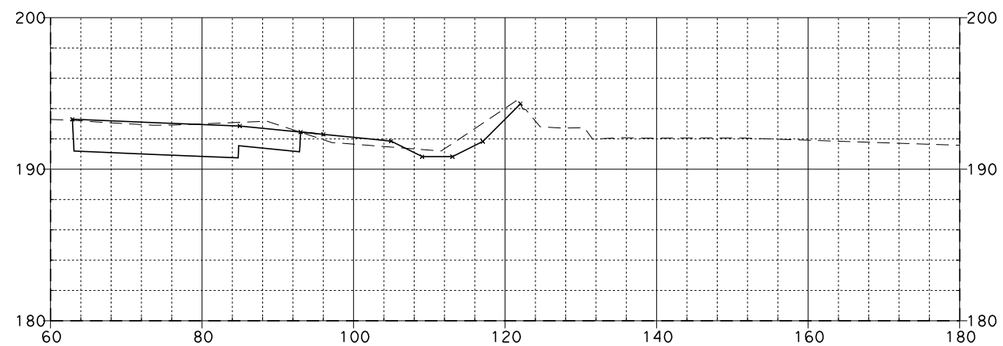

350+75.00

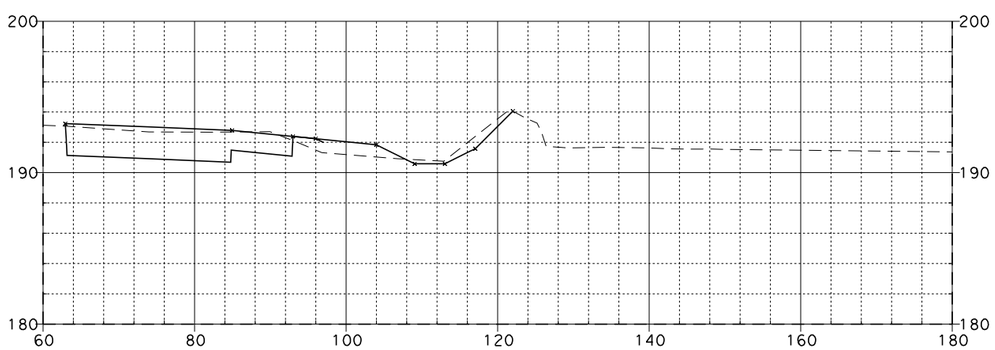

349+75.00

SR-57 MAINLINE

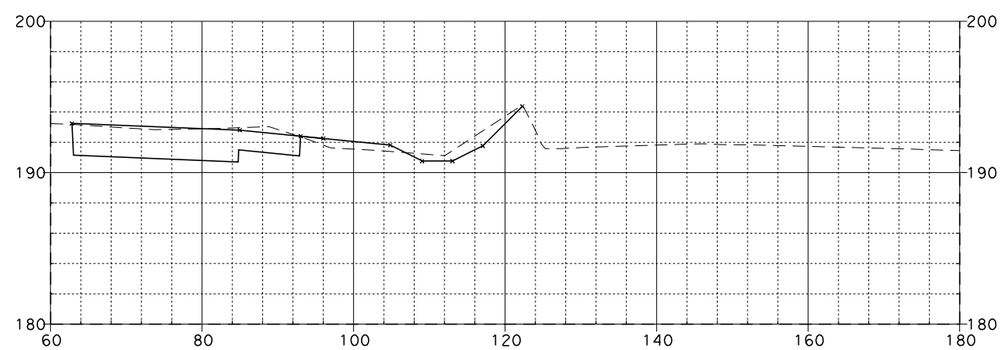

350+50.00

08\03\11

Dist	COUNTY	ROUTE	POST MILES TOTAL PROJECT	SHEET No.	TOTAL SHEETS
12	Ora	57	12.2/15.2		

FOR EARTHWORK DEVELOPMENT ONLY

...\d0282599\Cross_Sections.dgn

EA 0F0401

SCALE: Horiz 1"=20'
Vert 1"=10'

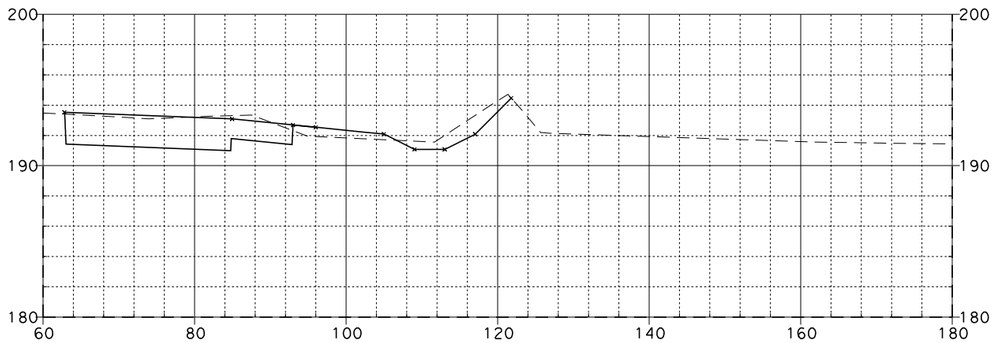

351+75.00

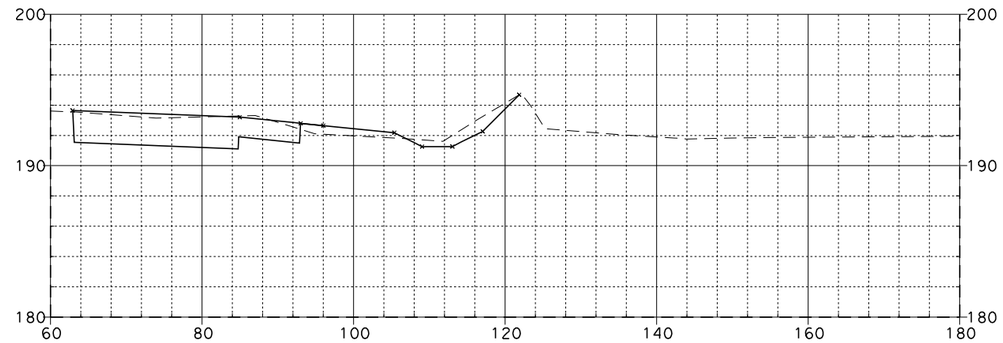

352+50.00

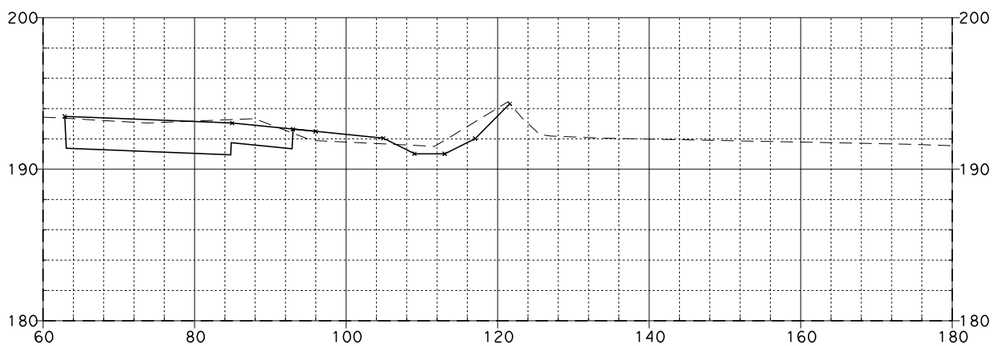

351+50.00

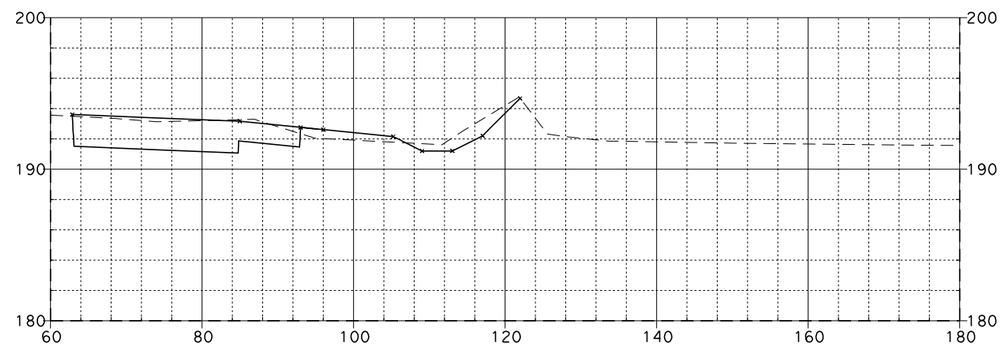

352+25.00

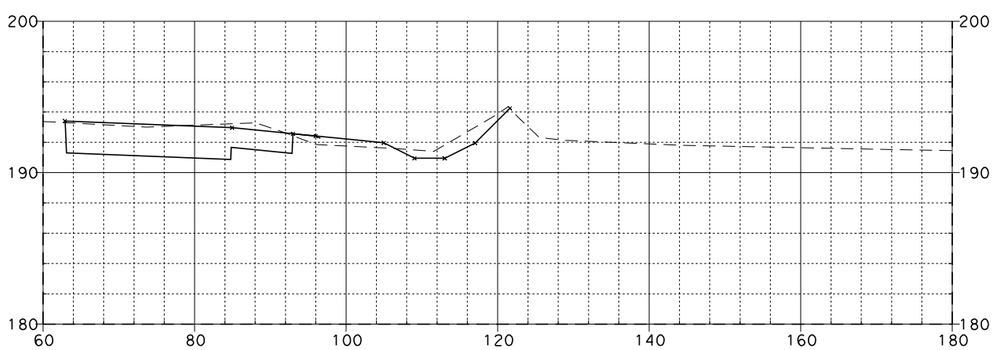

351+25.00

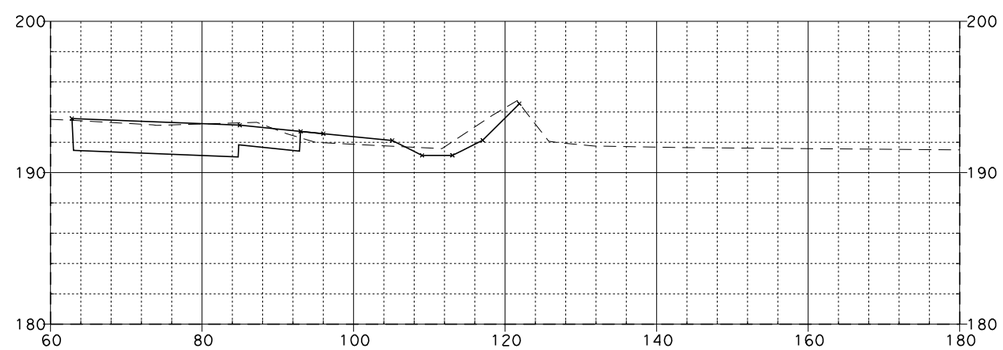

352+00.00

SR-57 MAINLINE

08\03\11

Dist	COUNTY	ROUTE	POST MILES TOTAL PROJECT	SHEET No.	TOTAL SHEETS
12	Ora	57	12.2/15.2		

FOR EARTHWORK DEVELOPMENT ONLY

...\d0282599\Cross_Sections.dgn

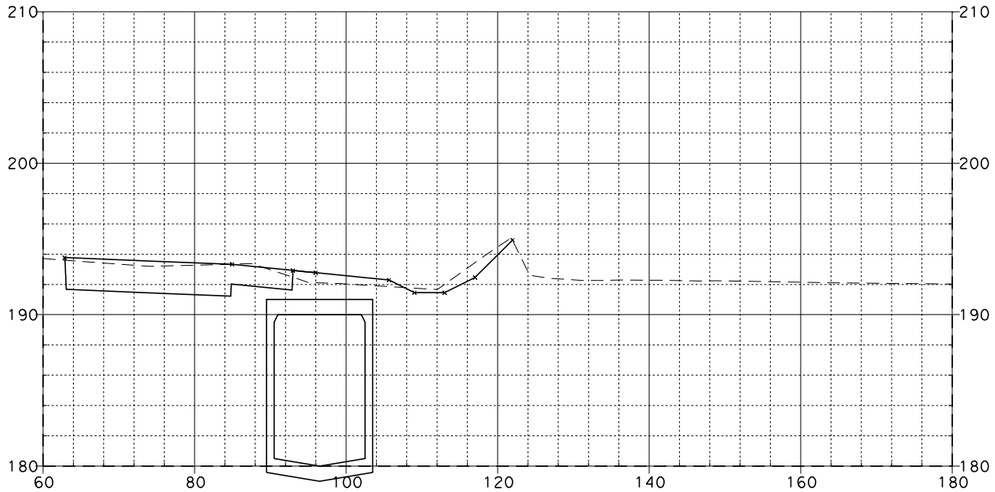

353+25.00

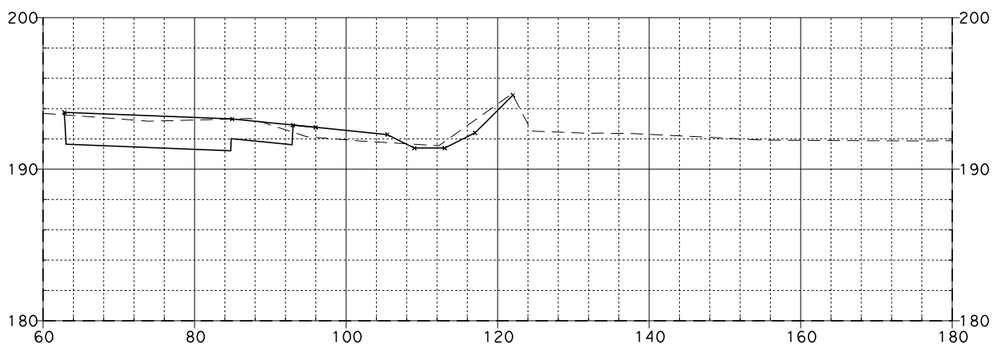

353+00.00

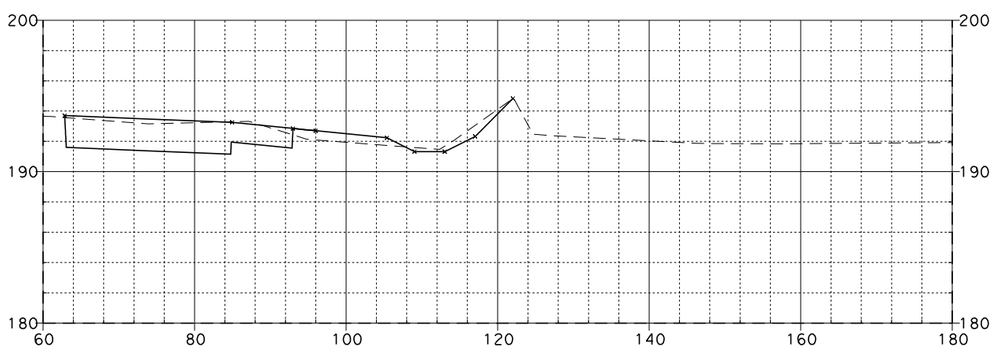

352+75.00

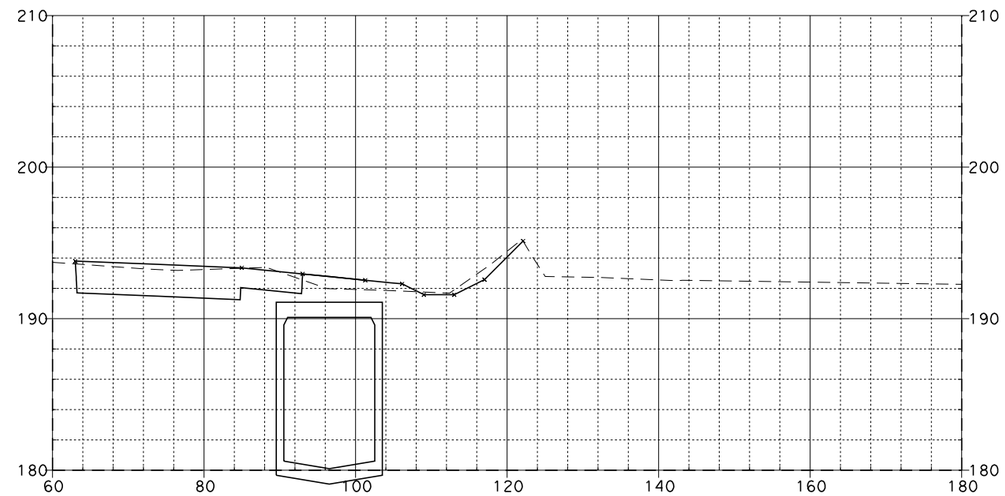

353+75.00

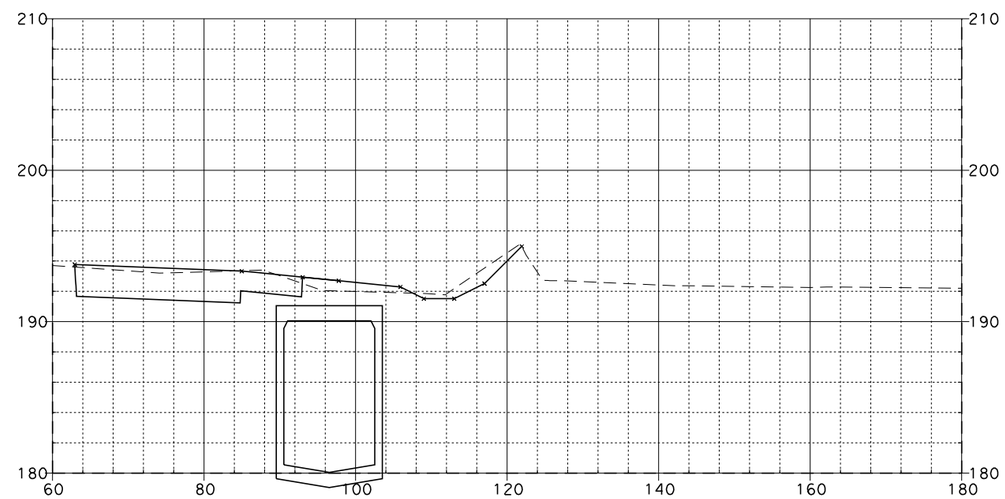

353+50.00

SR-57 MAINLINE

EA 0F0401

SCALE: Horiz 1"=20'
Vert 1"=10'

08\03\11

Dist	COUNTY	ROUTE	POST MILES TOTAL PROJECT	SHEET No.	TOTAL SHEETS
12	Ora	57	12.2/15.2		

FOR EARTHWORK DEVELOPMENT ONLY

...\d0282599\Cross_Sections.dgn

EA 0F0401

SCALE: Horiz 1"=20'
Vert 1"=10'

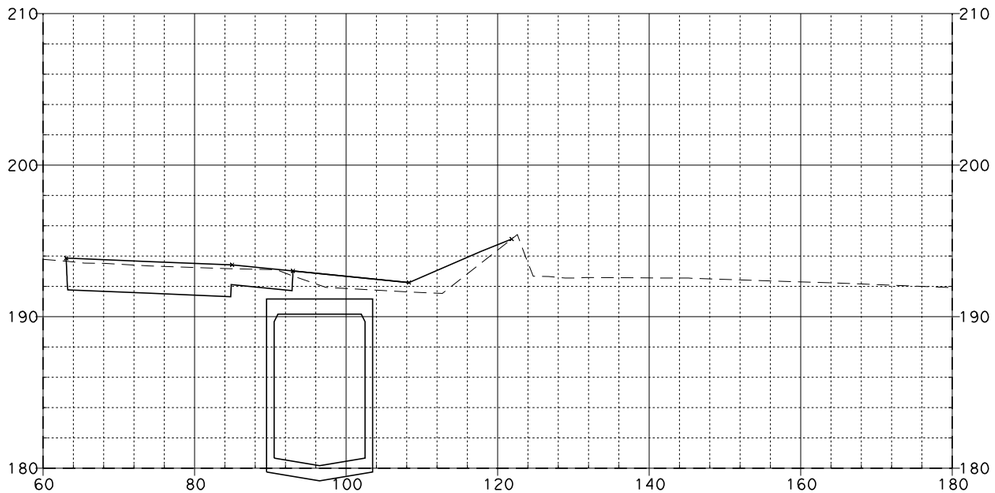

354+25.00

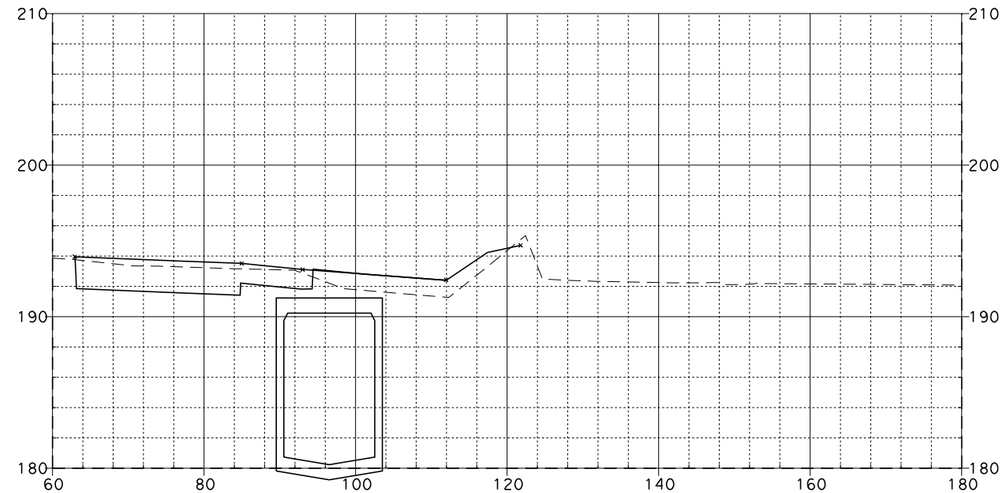

354+66.38

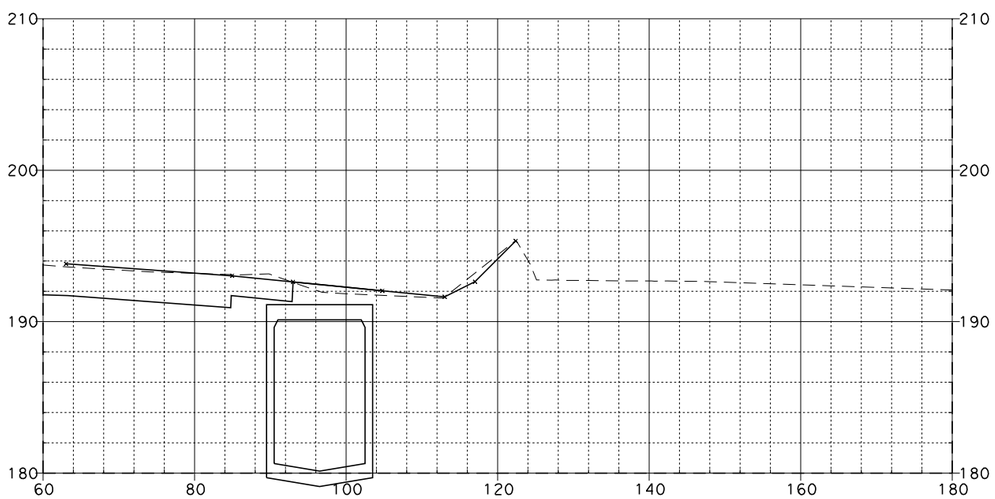

354+00.00

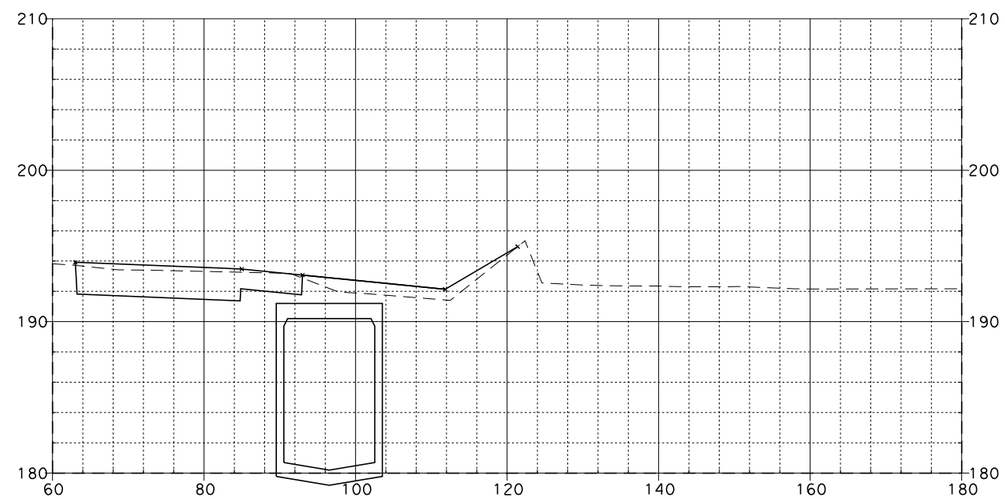

354+50.00

SR-57 MAINLINE

08\03\11

Dist	COUNTY	ROUTE	POST MILES TOTAL PROJECT	SHEET NO.	TOTAL SHEETS
12	Ora	57	12.2/15.2		

FOR EARTHWORK DEVELOPMENT ONLY

...\d0282599\Cross_Sections.dgn

EA 0F0401

SCALE: Horiz 1"=20'
Vert 1"=10'

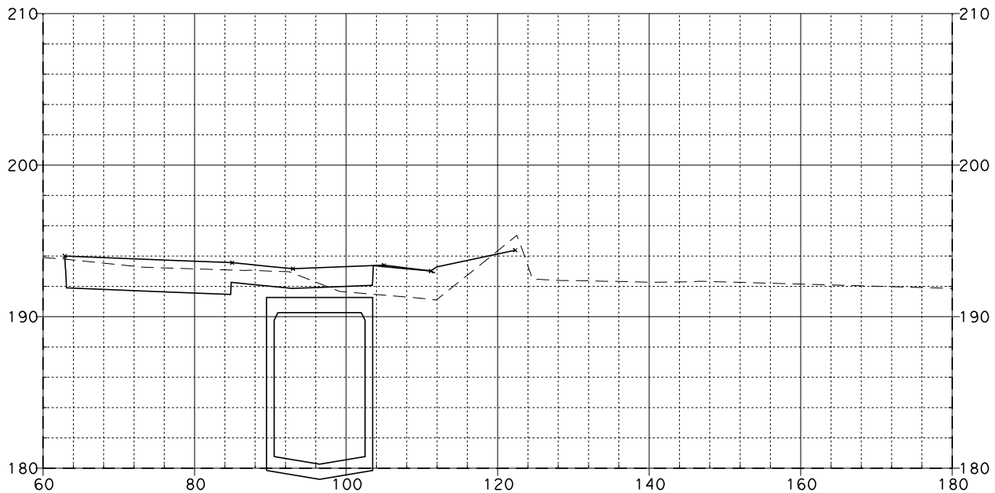

354+86.38

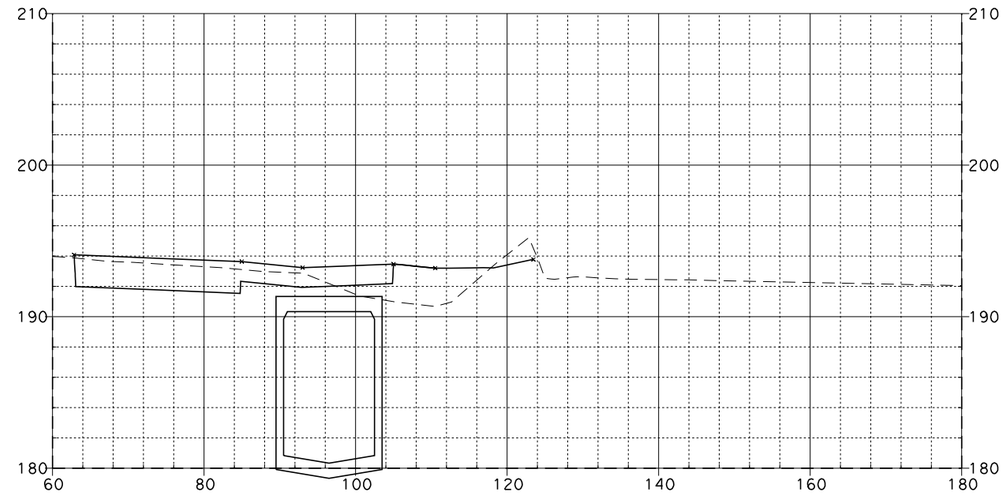

355+25.00

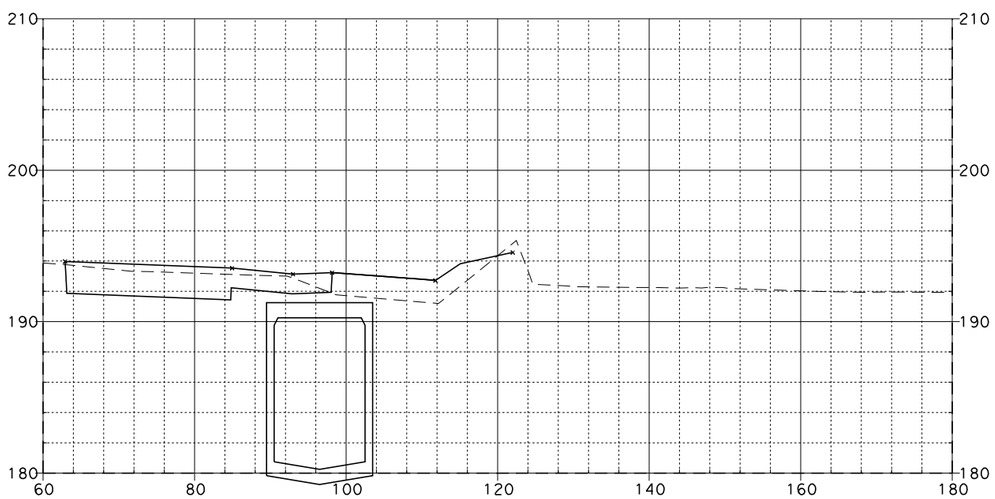

354+75.00

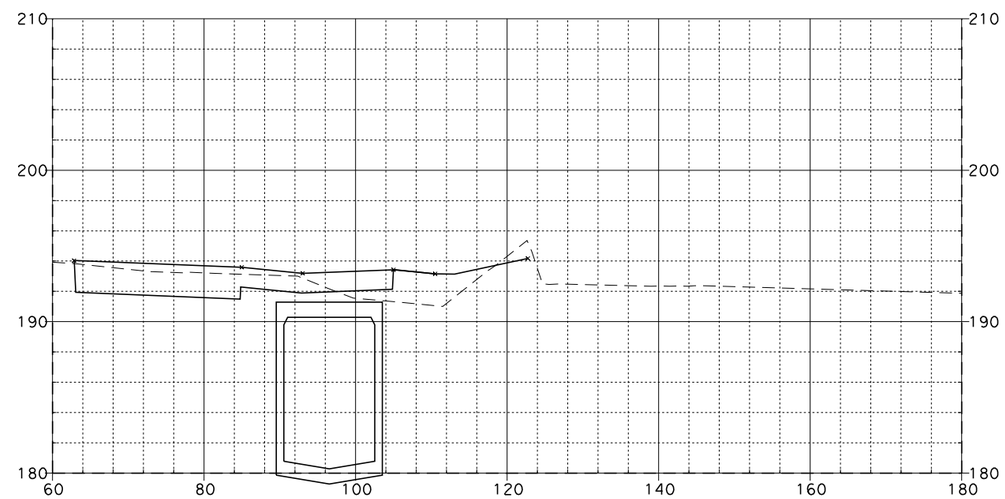

355+00.00

SR-57 MAINLINE

08\03\11

Dist	COUNTY	ROUTE	POST MILES TOTAL PROJECT	SHEET NO.	TOTAL SHEETS
12	Ora	57	12.2/15.2		

FOR EARTHWORK DEVELOPMENT ONLY

...\d0282599\Cross_Sections.dgn

EA 0F0401

SCALE: Horiz 1"=20'
Vert 1"=10'

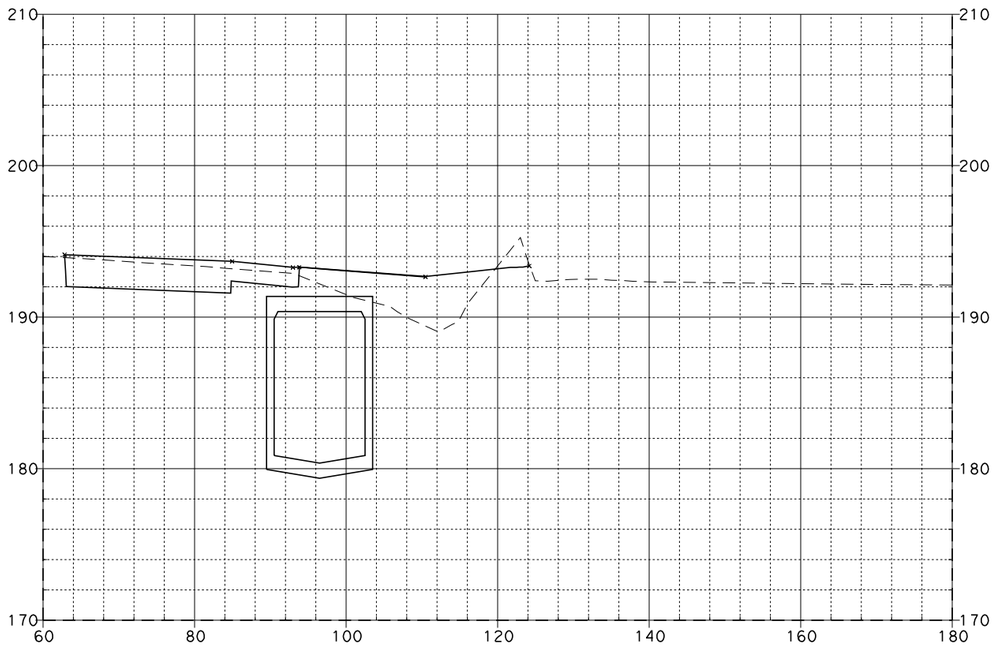

355+50.00

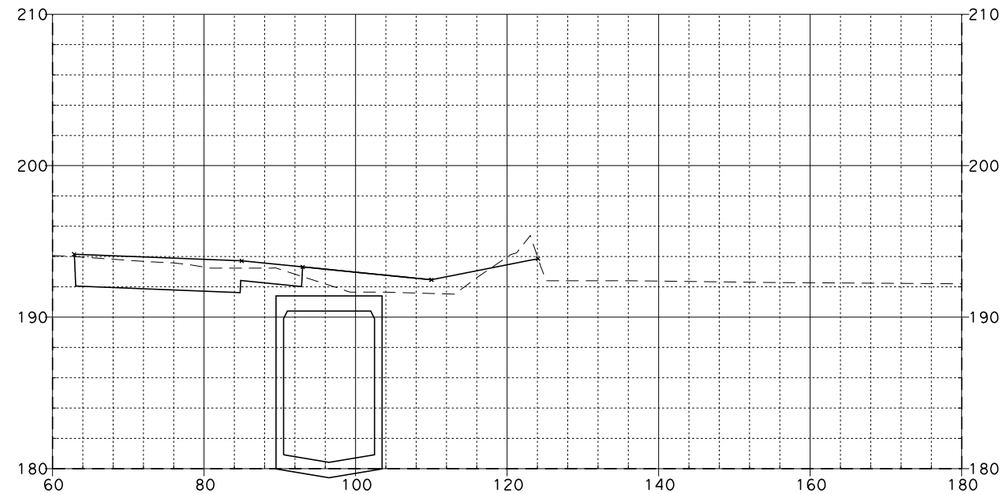

355+75.00

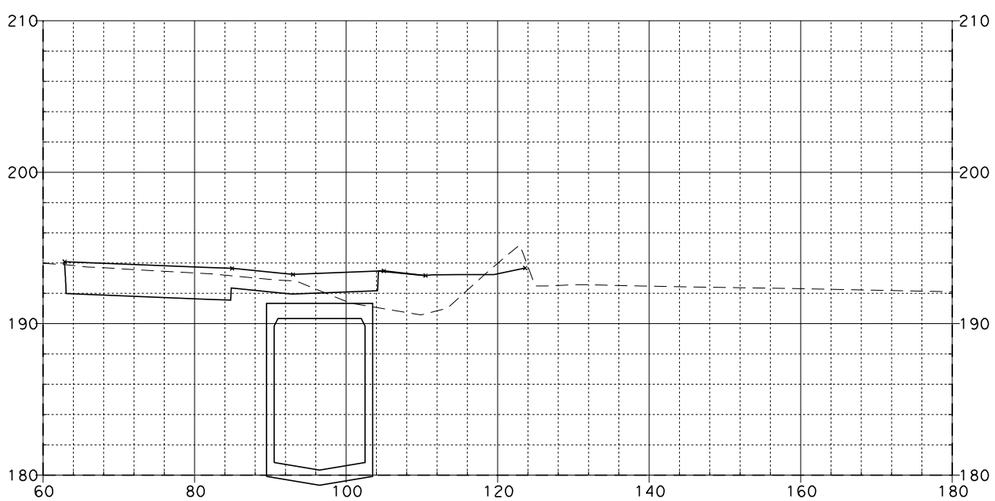

355+31.38

SR-57 MAINLINE

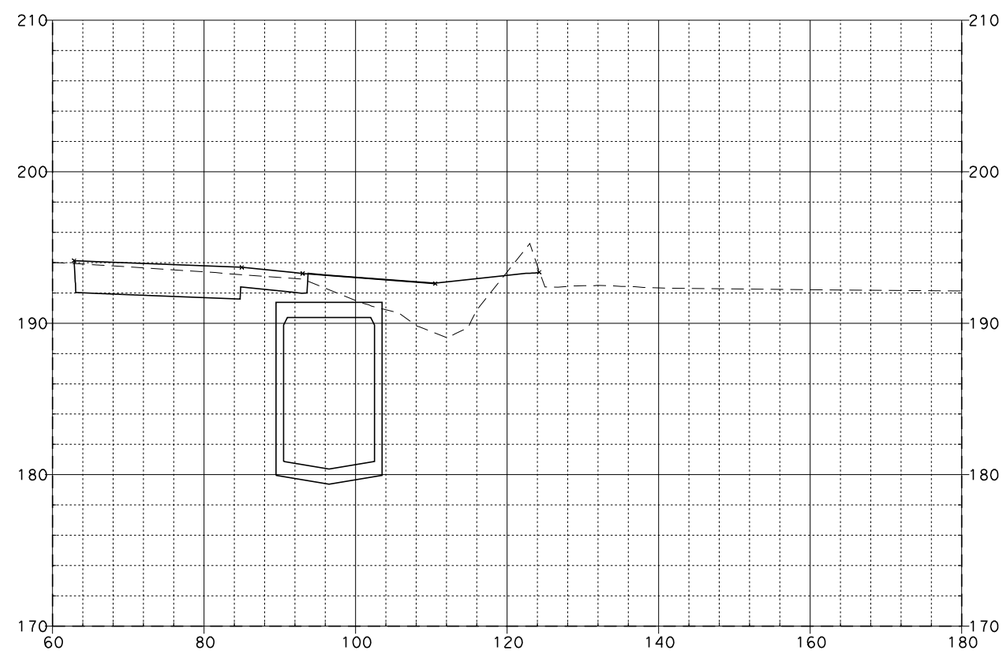

355+51.38

08\03\11

Dist	COUNTY	ROUTE	POST MILES TOTAL PROJECT	SHEET No.	TOTAL SHEETS
12	Ora	57	12.2/15.2		

FOR EARTHWORK DEVELOPMENT ONLY

...\d0282599\Cross_Sections.dgn

EA 0F0401

SCALE: Horiz 1"=20'
Vert 1"=10'

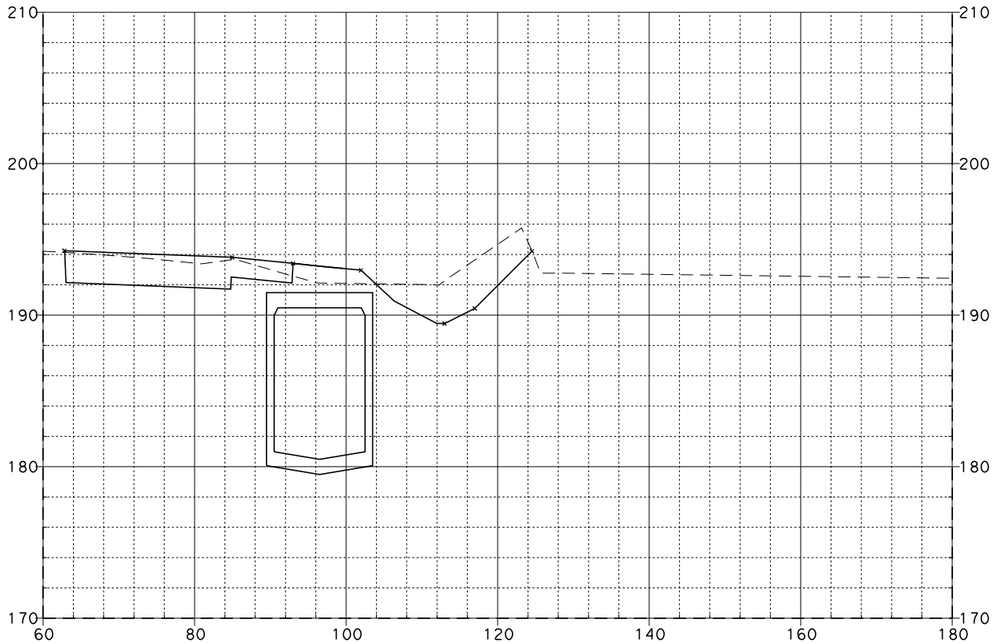

356+25.00

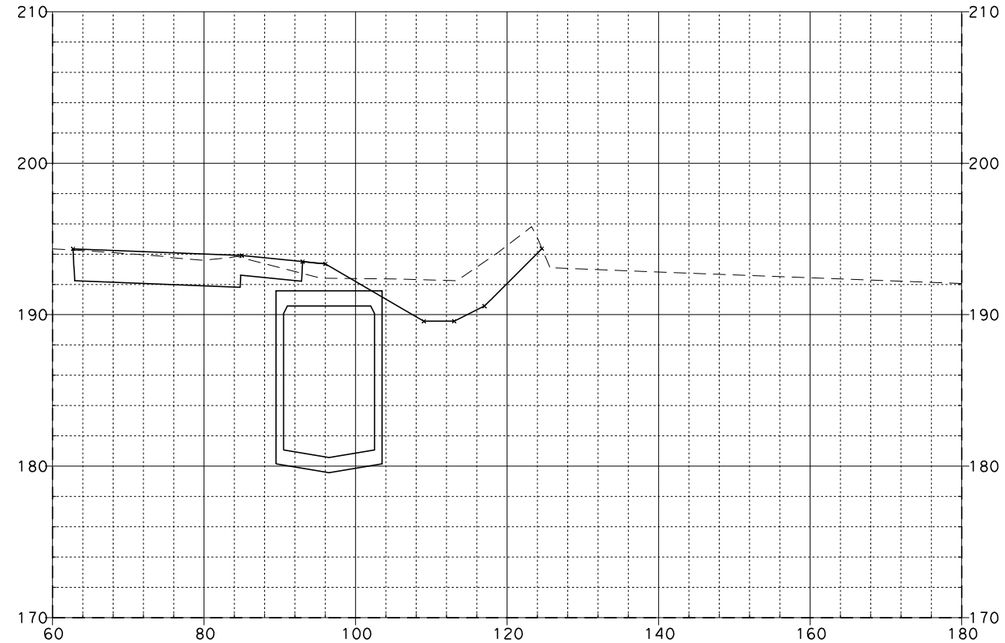

356+75.00

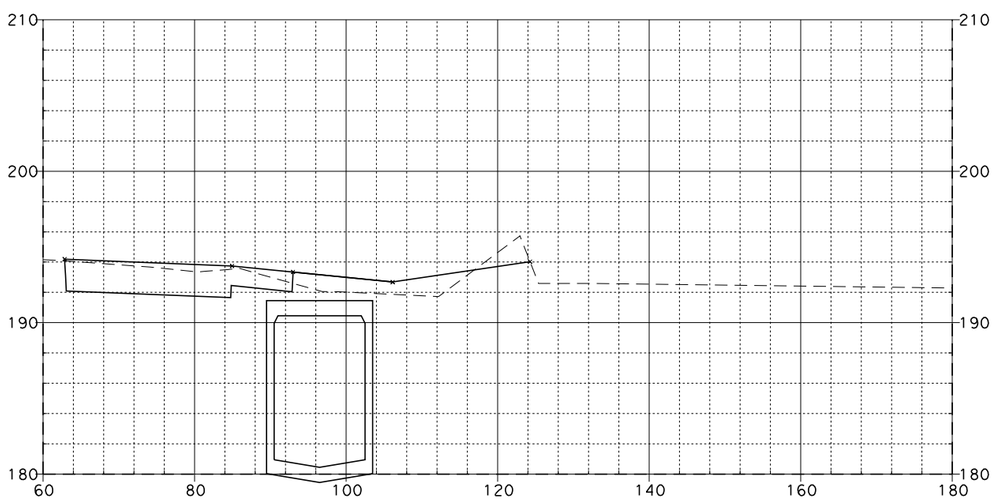

356+00.00

SR-57 MAINLINE

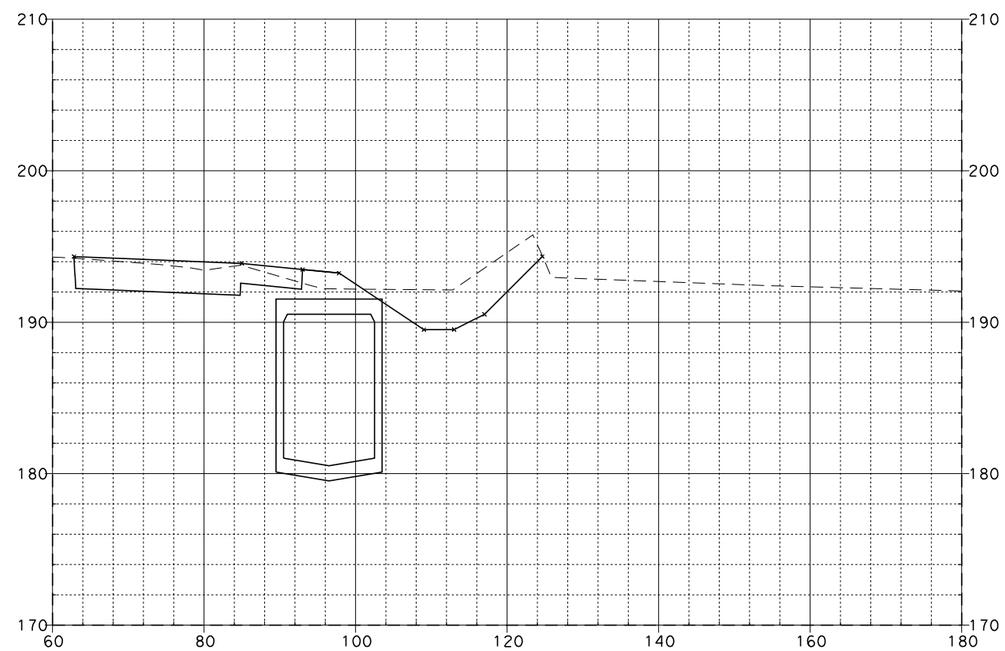

356+50.00

08\03\11

Dist	COUNTY	ROUTE	POST MILES TOTAL PROJECT	SHEET No.	TOTAL SHEETS
12	Ora	57	12.2/15.2		

FOR EARTHWORK DEVELOPMENT ONLY

...\d0282599\Cross_Sections.dgn

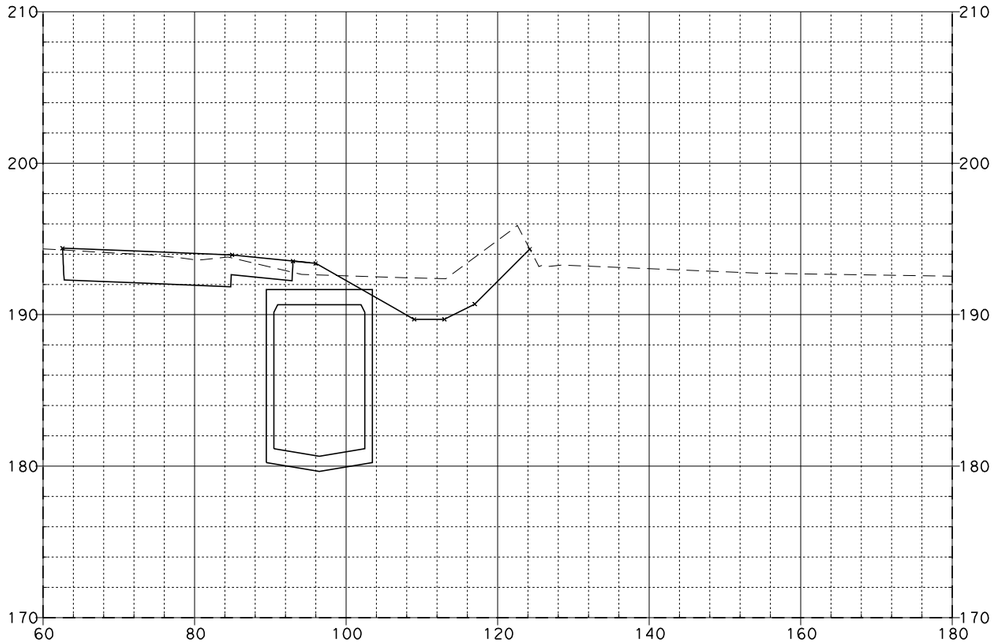

357+25.00

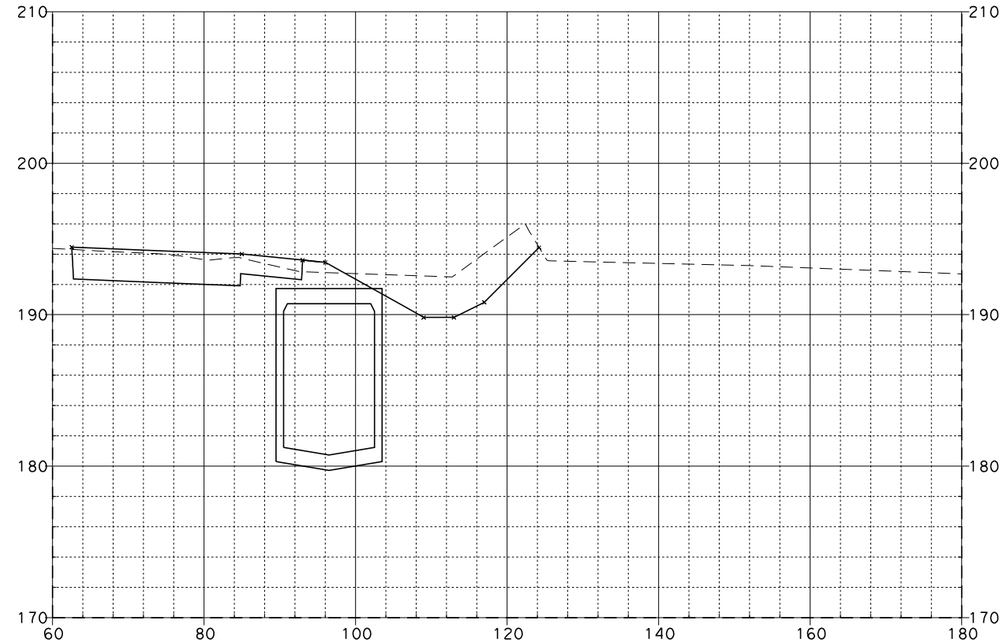

357+75.00

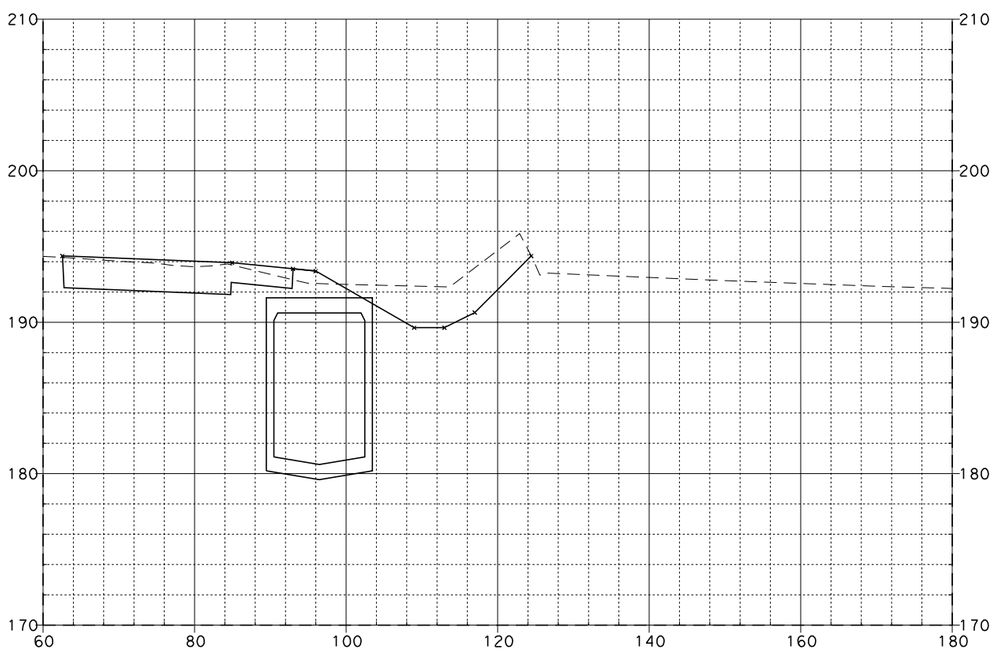

357+00.00

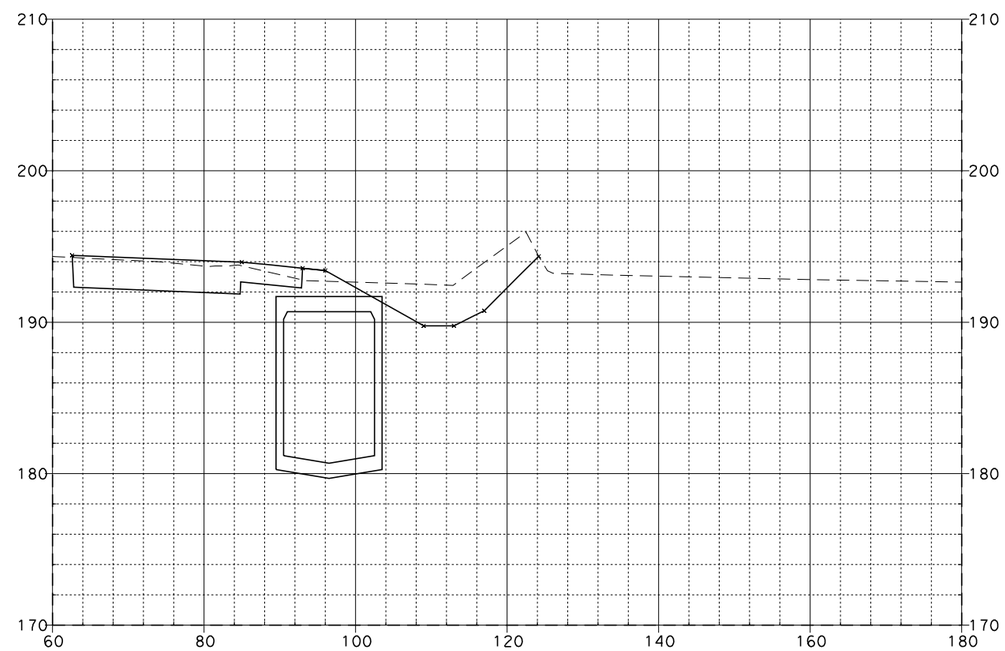

357+50.00

SR-57 MAINLINE

EA 0F0401

SCALE: Horiz 1"=20'
Vert 1"=10'

08\03\11

Dist	COUNTY	ROUTE	POST MILES TOTAL PROJECT	SHEET No.	TOTAL SHEETS
12	Ora	57	12.2/15.2		

FOR EARTHWORK DEVELOPMENT ONLY

...\d0282599\Cross_Sections.dgn

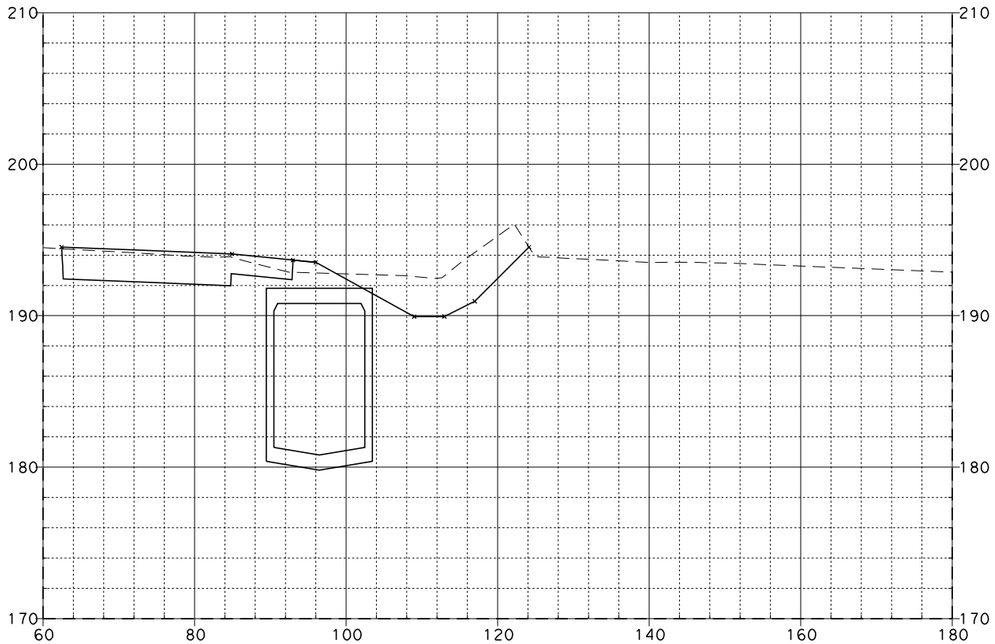

358+25.00

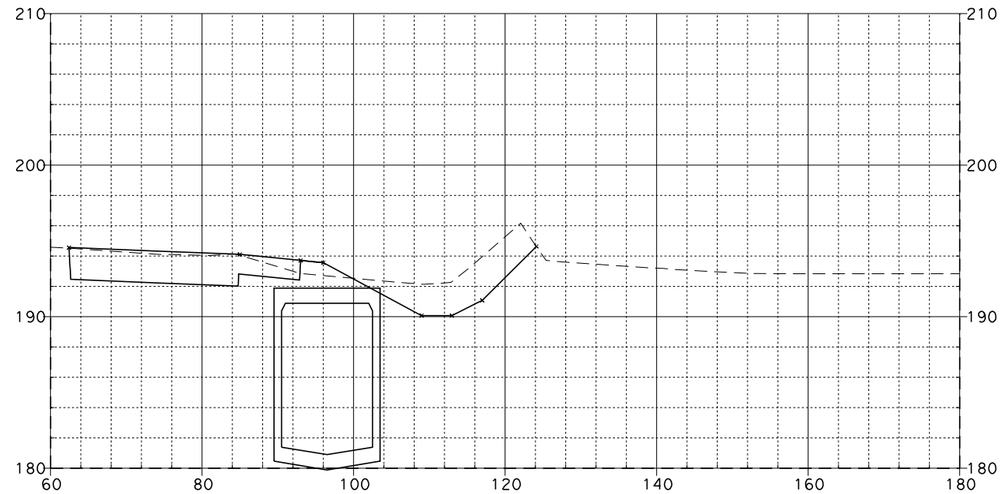

358+75.00

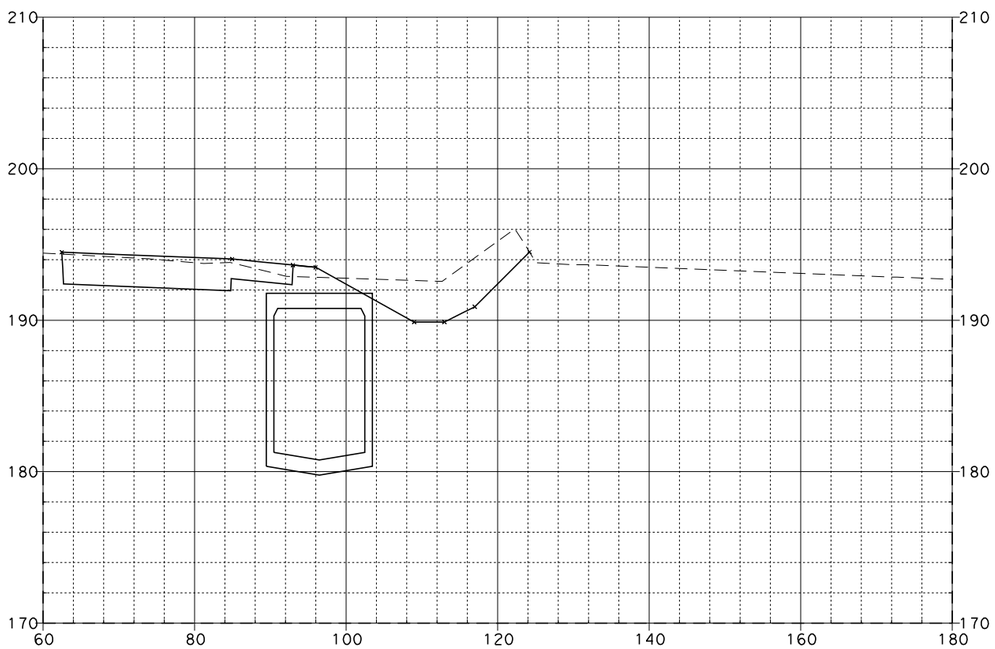

358+00.00

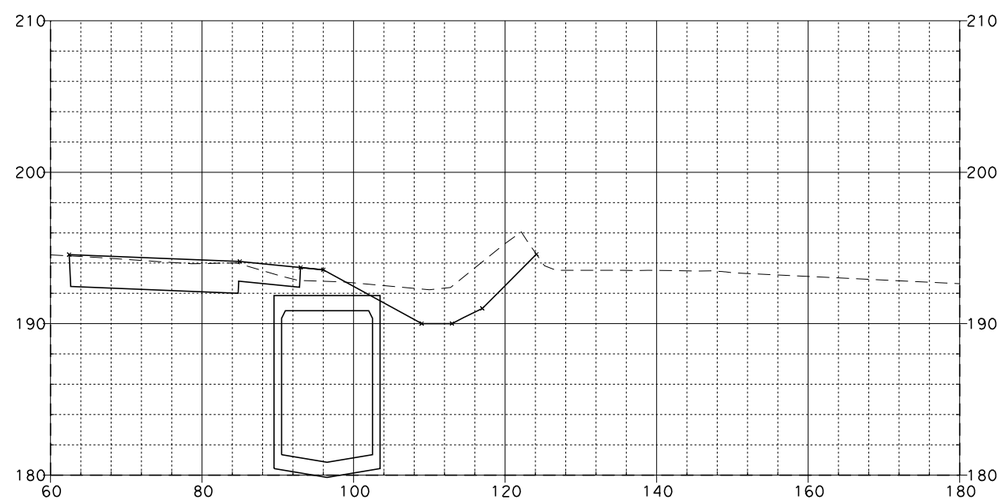

358+50.00

SR-57 MAINLINE

EA 0F0401

SCALE: Horiz 1"=20'
Vert 1"=10'

08\03\11

Dist	COUNTY	ROUTE	POST MILES TOTAL PROJECT	SHEET No.	TOTAL SHEETS
12	Ora	57	12.2/15.2		

FOR EARTHWORK DEVELOPMENT ONLY

...\d0282599\Cross_Sections.dgn

EA 0F0401

SCALE: Horiz 1"=20'
Vert 1"=10'

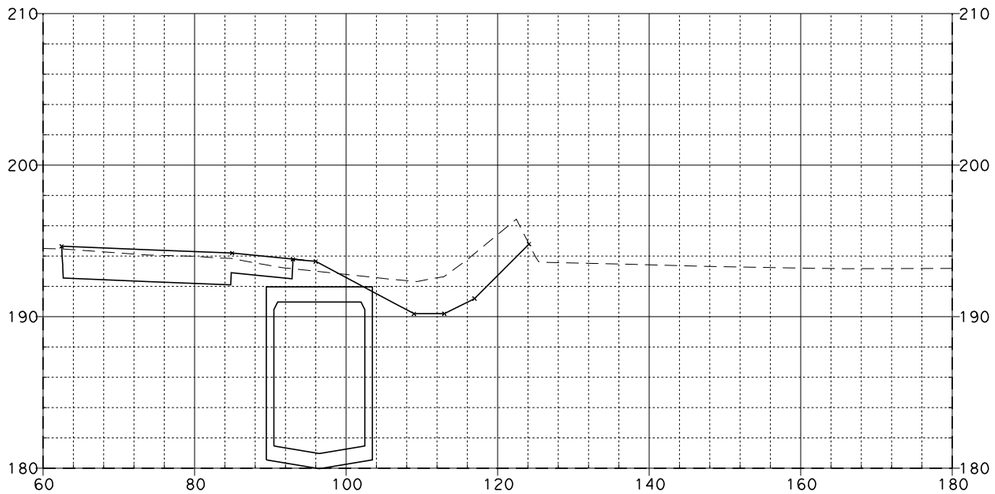

359+25.00

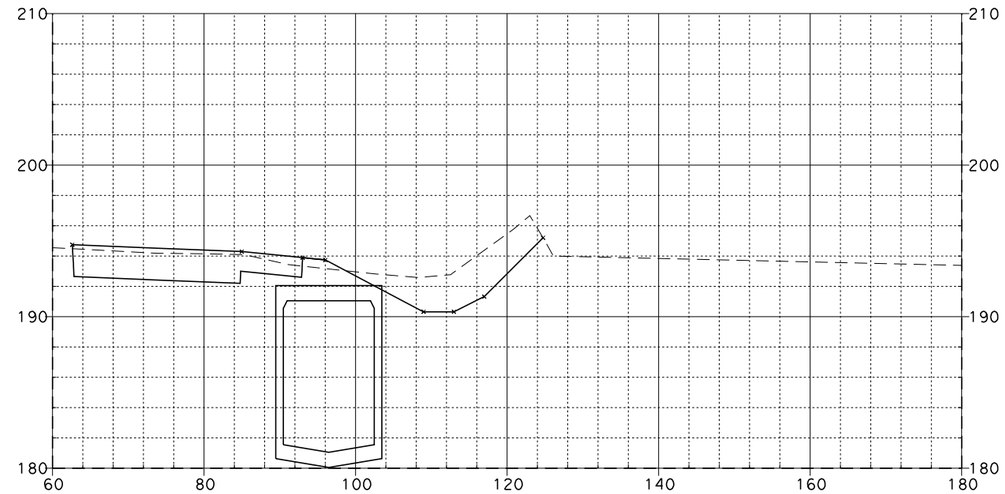

359+75.00

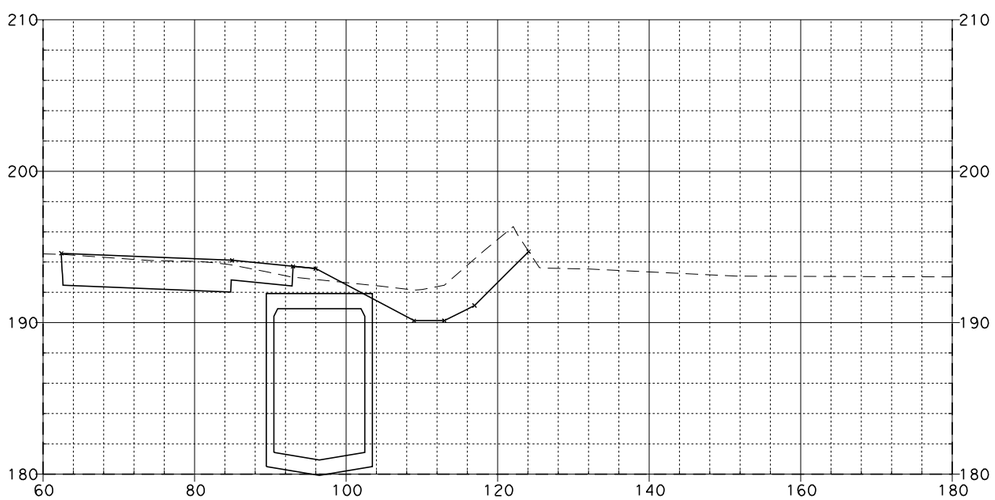

359+00.00

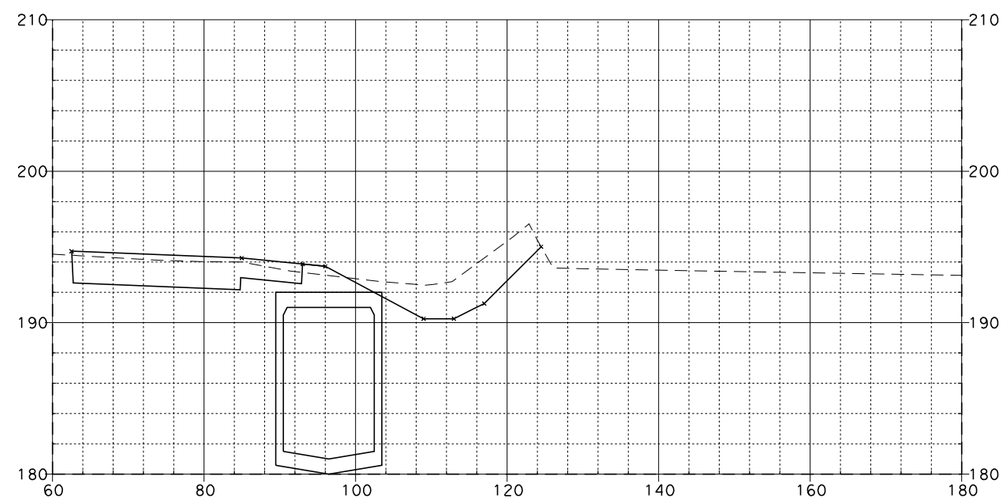

359+50.00

SR-57 MAINLINE

08\03\11

Dist	COUNTY	ROUTE	POST MILES TOTAL PROJECT	SHEET NO.	TOTAL SHEETS
12	Ora	57	12.2/15.2		

FOR EARTHWORK DEVELOPMENT ONLY

...\d0282599\Cross_Sections.dgn

EA 0F0401

SCALE: Horiz 1"=20'
Vert 1"=10'

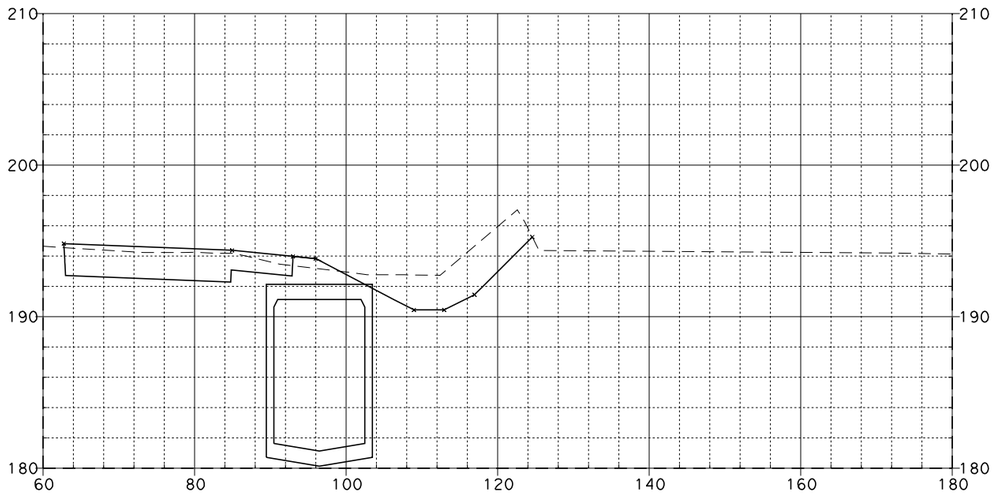

360+25.00

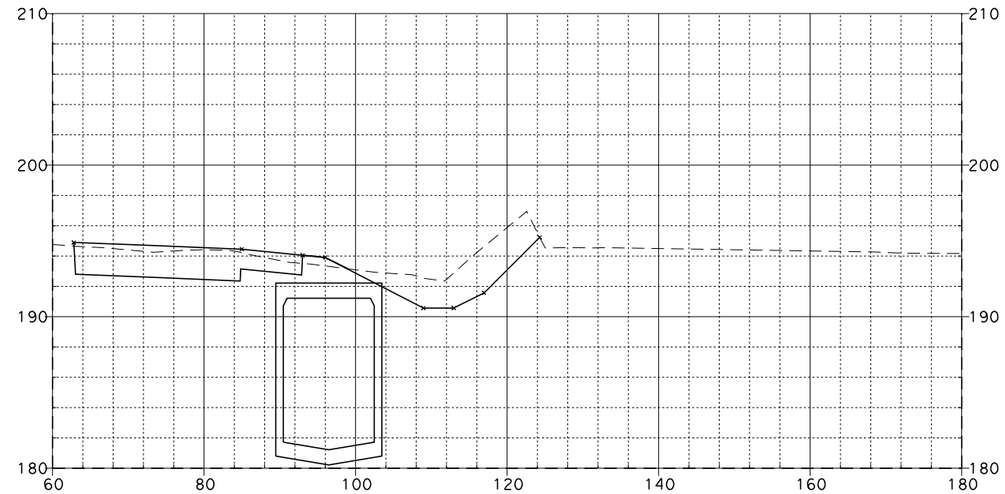

360+75.00

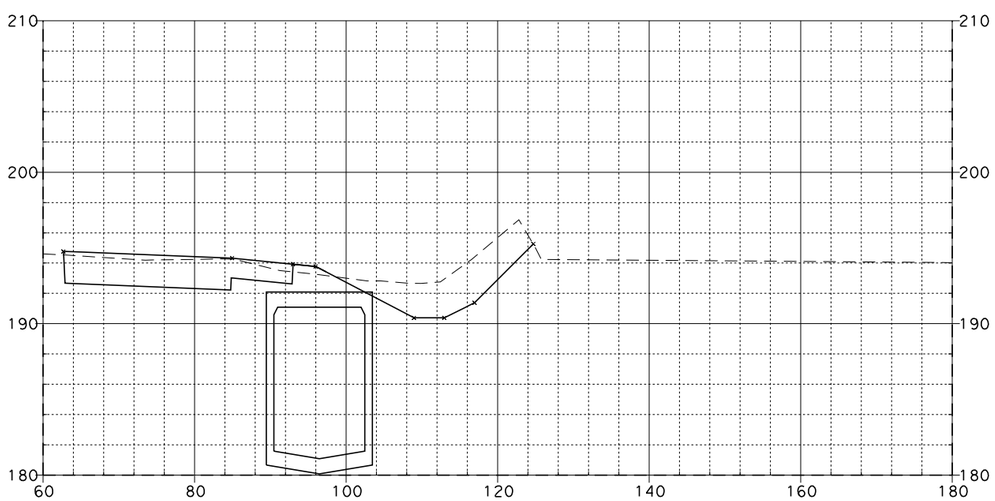

360+00.00

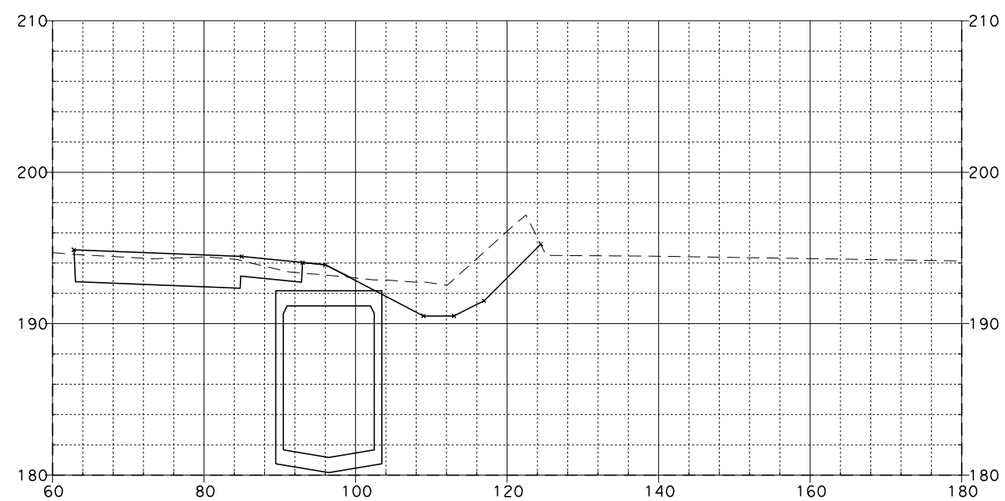

360+50.00

SR-57 MAINLINE

08\03\11

Dist	COUNTY	ROUTE	POST MILES TOTAL PROJECT	SHEET NO.	TOTAL SHEETS
12	Ora	57	12.2/15.2		

FOR EARTHWORK DEVELOPMENT ONLY

...\d0282599\Cross_Sections.dgn

EA 0F0401

SCALE: Horiz 1"=20'
Vert 1"=10'

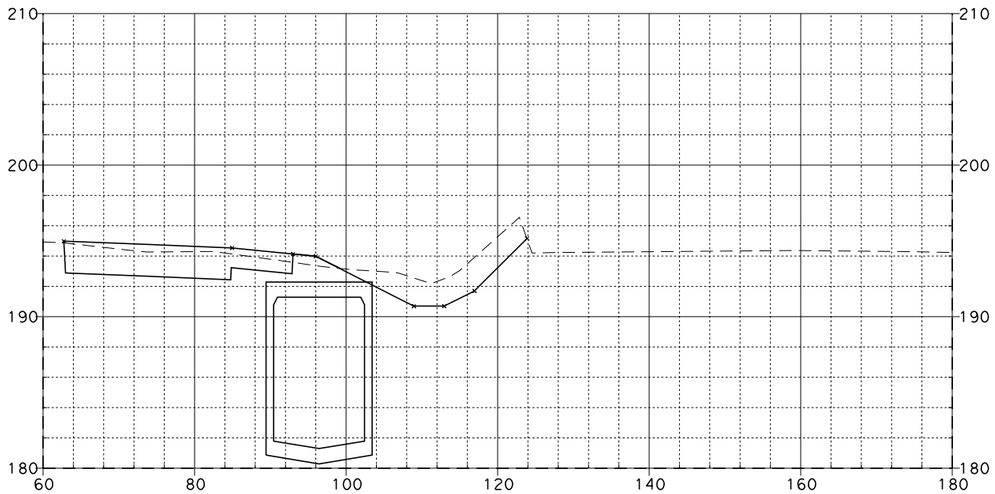

361+25.00

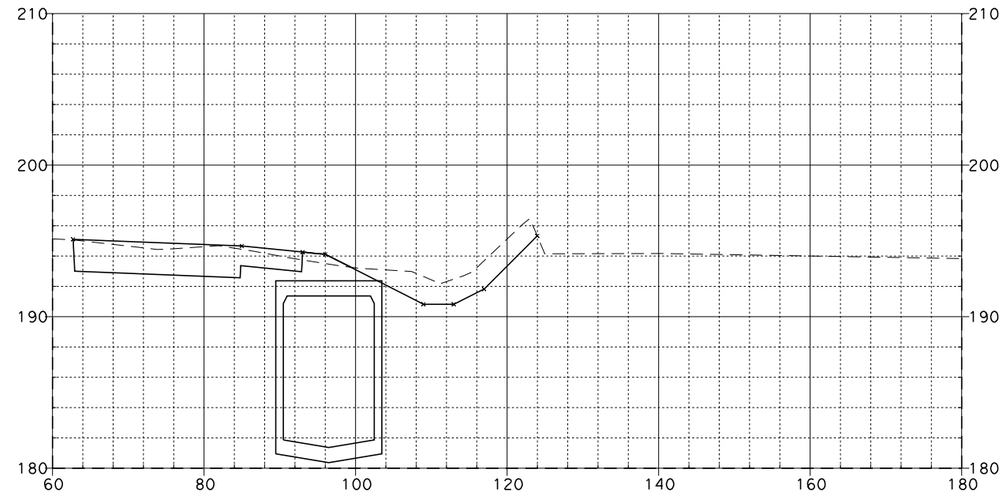

361+75.00

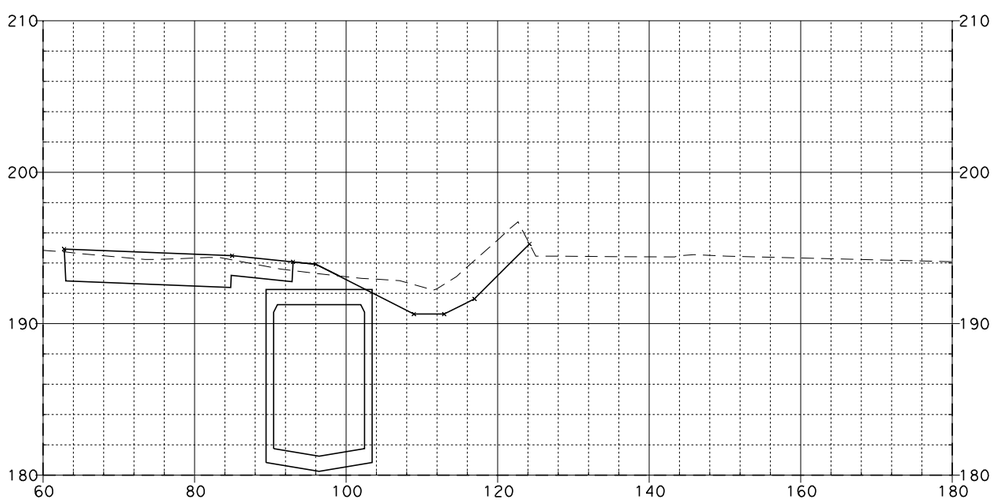

361+00.00

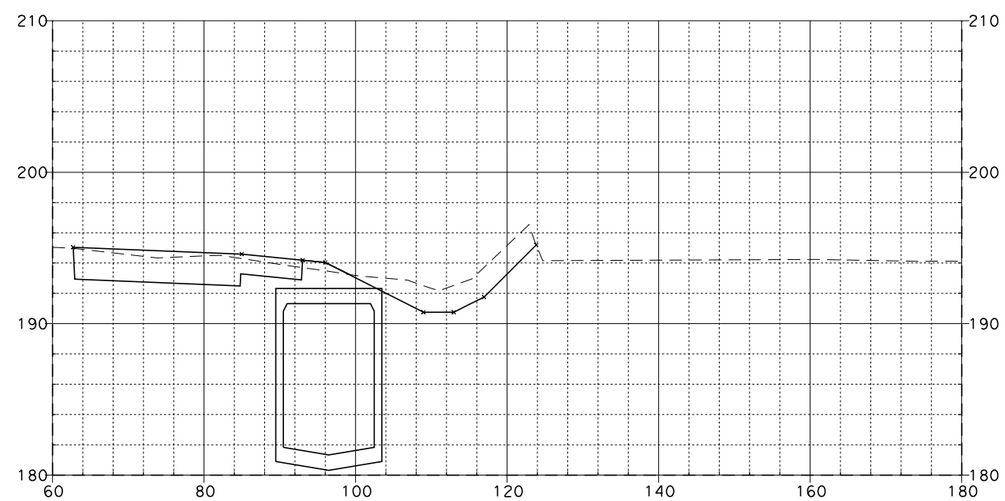

361+50.00

SR-57 MAINLINE

08\03\11

Dist	COUNTY	ROUTE	POST MILES TOTAL PROJECT	SHEET NO.	TOTAL SHEETS
12	Ora	57	12.2/15.2		

FOR EARTHWORK DEVELOPMENT ONLY

...\d0282599\Cross_Sections.dgn

EA 0F0401

SCALE: Horiz 1"=20'
Vert 1"=10'

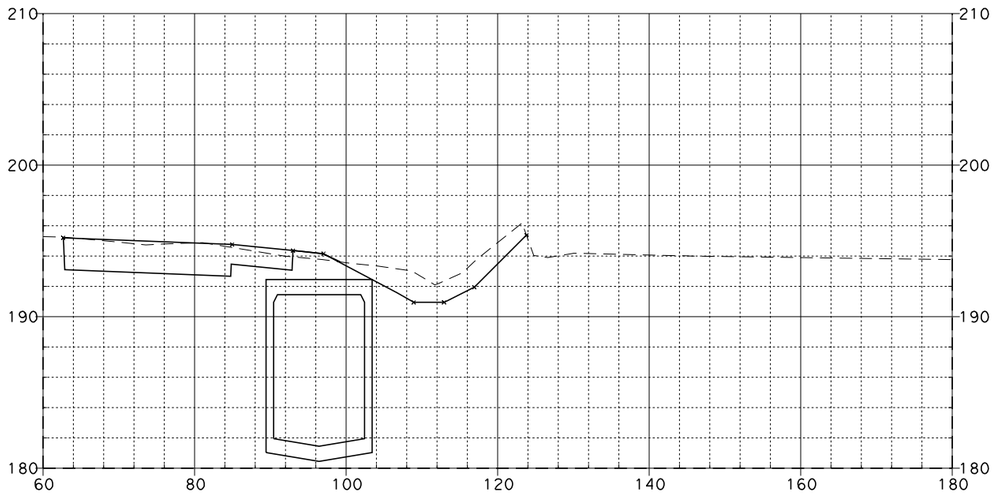

362+25.00

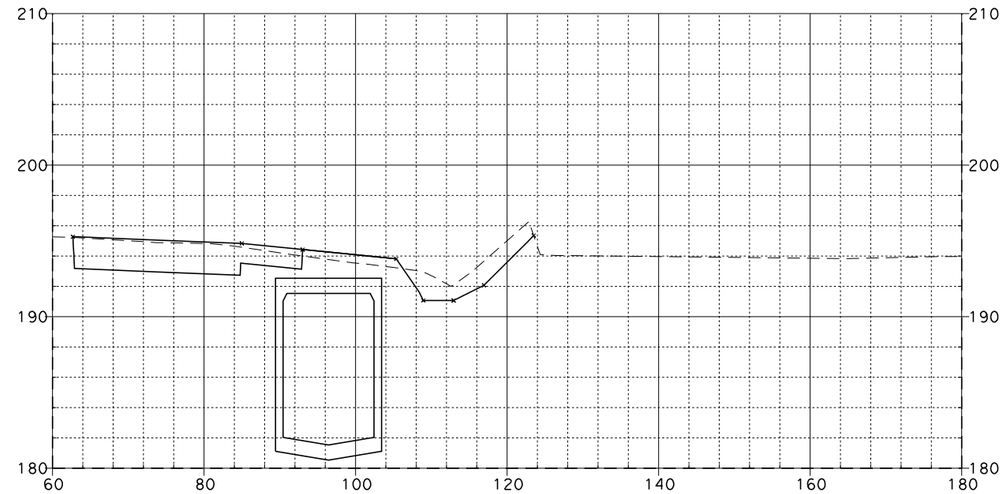

362+75.00

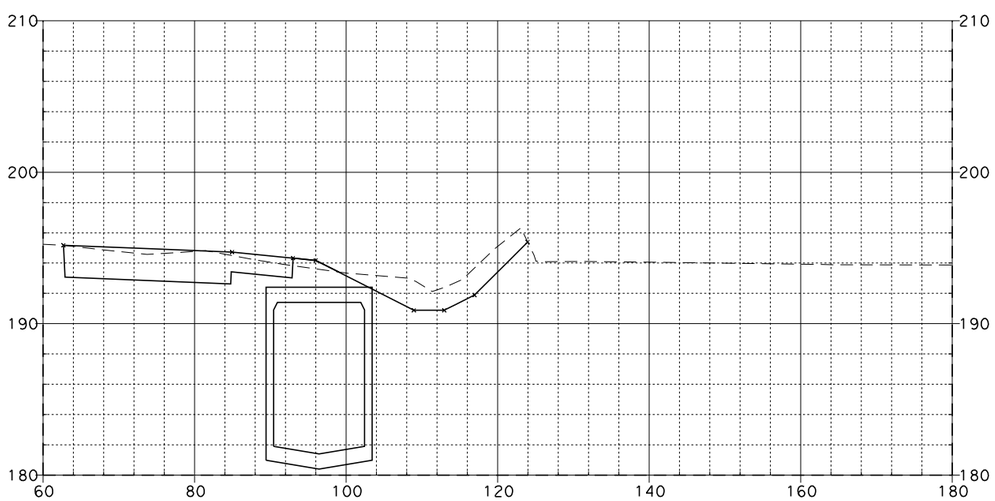

362+00.00

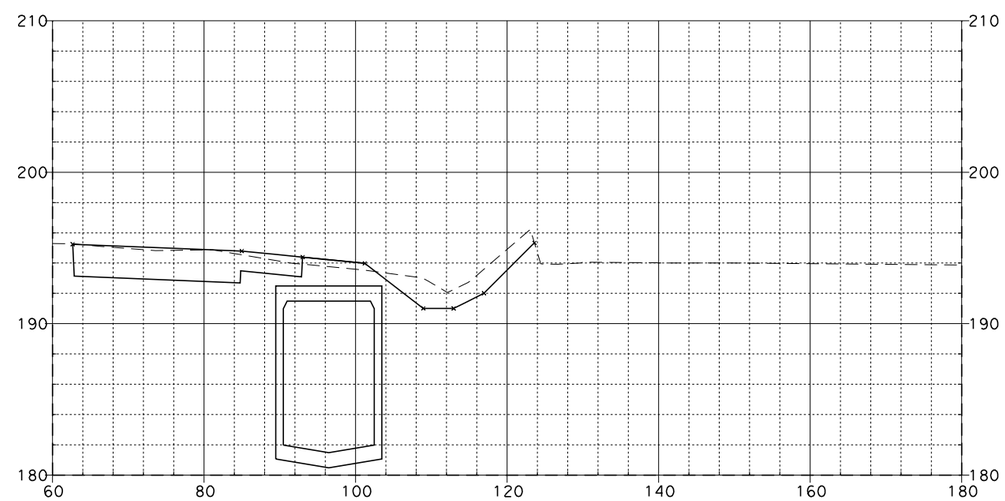

362+50.00

SR-57 MAINLINE

08\03\11

Dist	COUNTY	ROUTE	POST MILES TOTAL PROJECT	SHEET NO.	TOTAL SHEETS
12	Ora	57	12.2/15.2		

FOR EARTHWORK DEVELOPMENT ONLY

...\d0282599\Cross_Sections.dgn

EA 0F0401

SCALE: Horiz 1"=20'
Vert 1"=10'

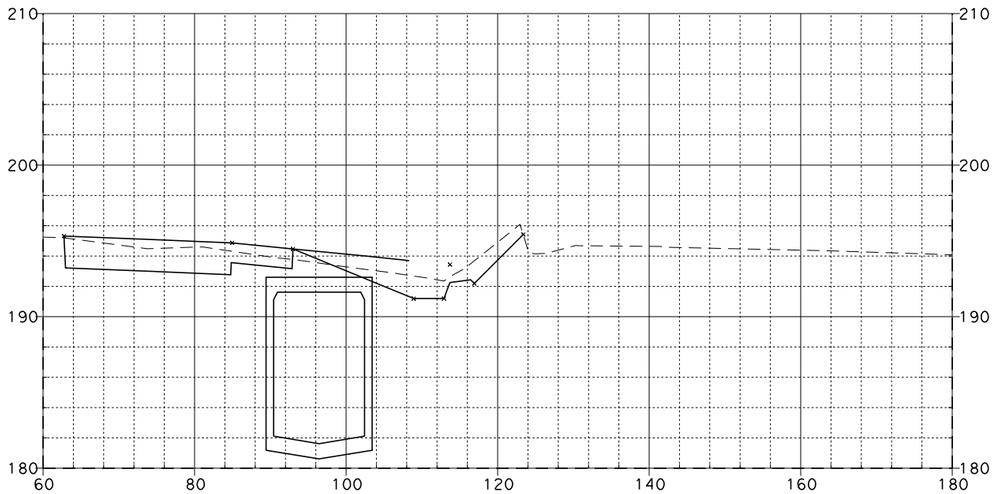

363+25.00

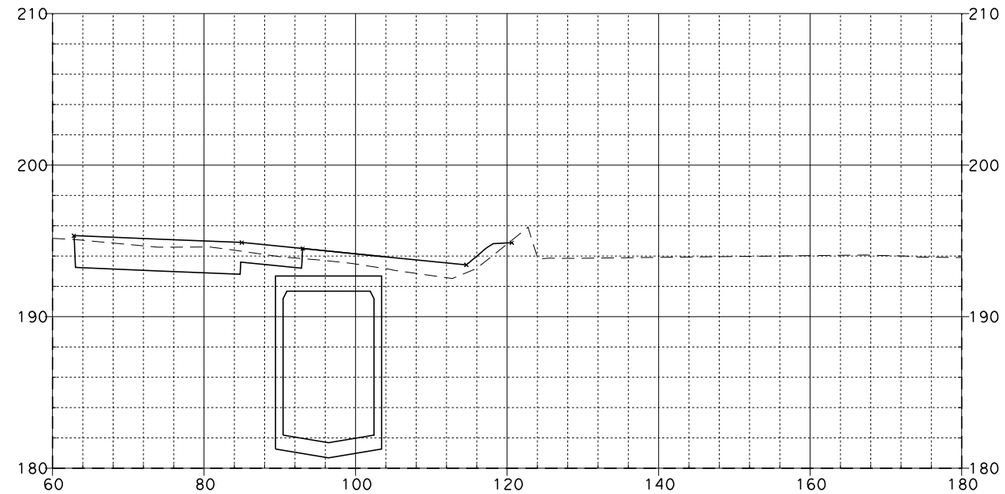

363+75.00

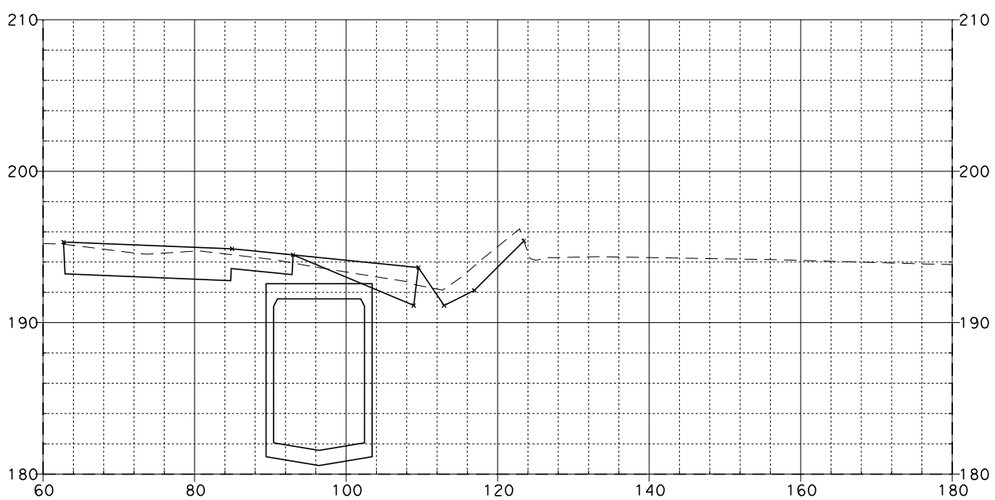

363+00.00

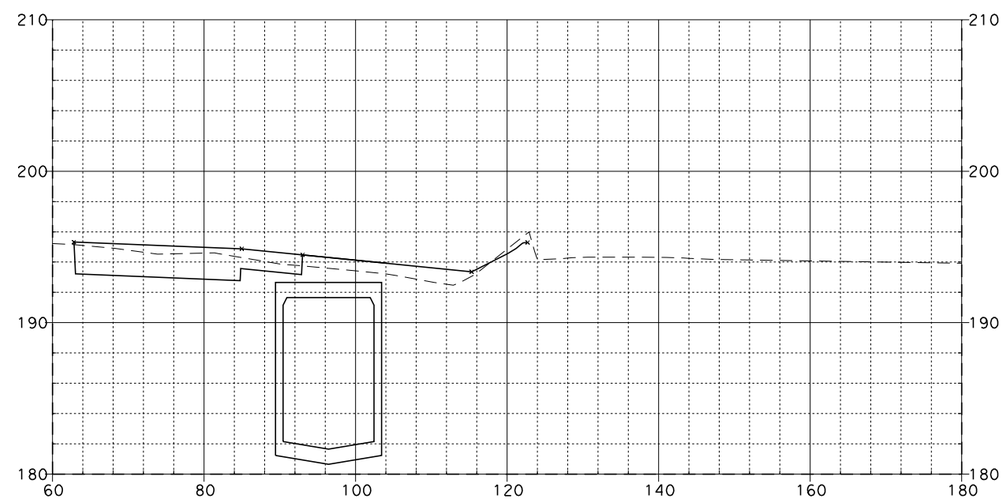

363+50.00

SR-57 MAINLINE

08\03\11

Dist	COUNTY	ROUTE	POST MILES TOTAL PROJECT	SHEET NO.	TOTAL SHEETS
12	Ora	57	12.2/15.2		

FOR EARTHWORK DEVELOPMENT ONLY

...\d0282599\Cross_Sections.dgn

EA 0F0401

SCALE: Horiz 1"=20'
Vert 1"=10'

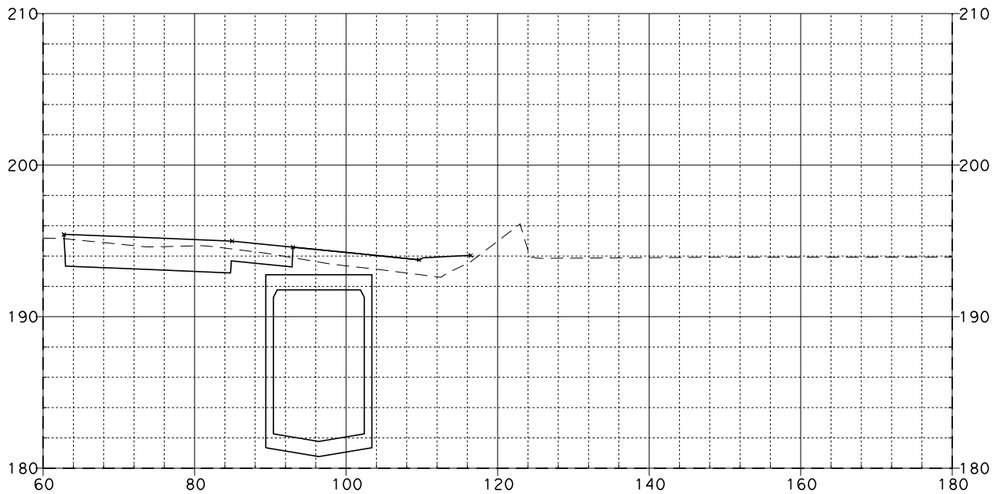

364+25.00

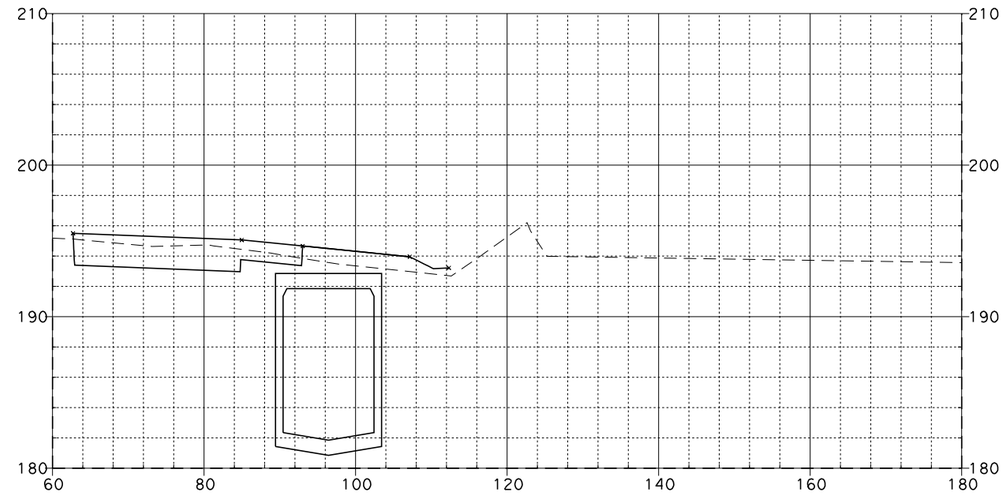

364+75.00

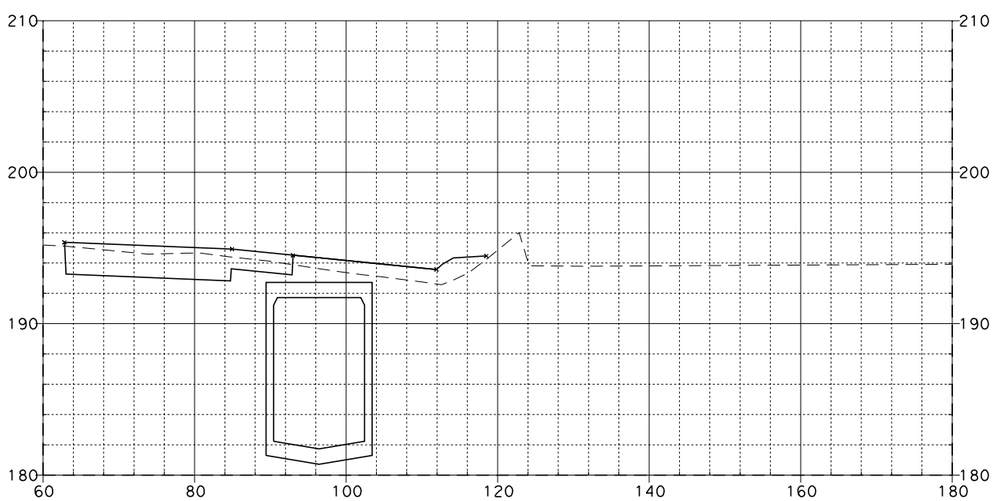

364+00.00

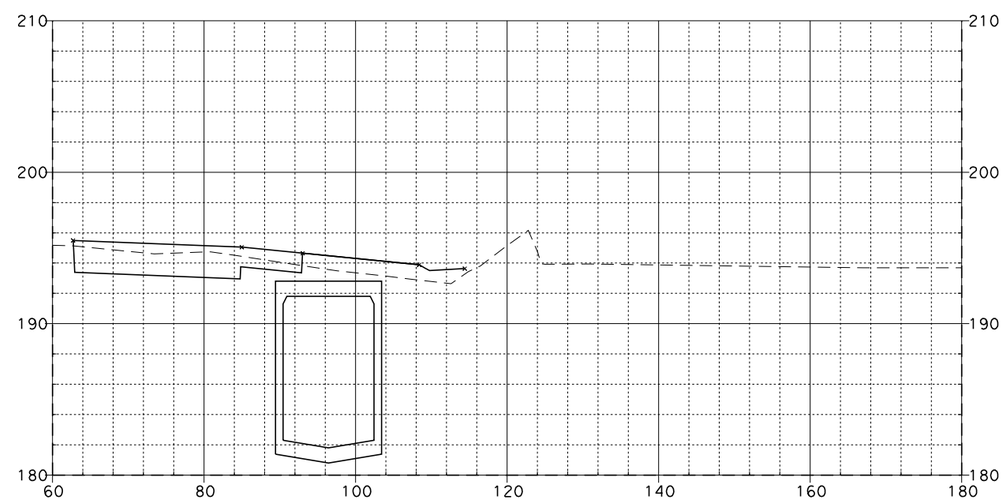

364+50.00

SR-57 MAINLINE

08\03\11

Dist	COUNTY	ROUTE	POST MILES TOTAL PROJECT	SHEET NO.	TOTAL SHEETS
12	Ora	57	12.2/15.2		

FOR EARTHWORK DEVELOPMENT ONLY

...\d0282599\Cross_Sections.dgn

EA 0F0401

SCALE: Horiz 1"=20'
Vert 1"=10'

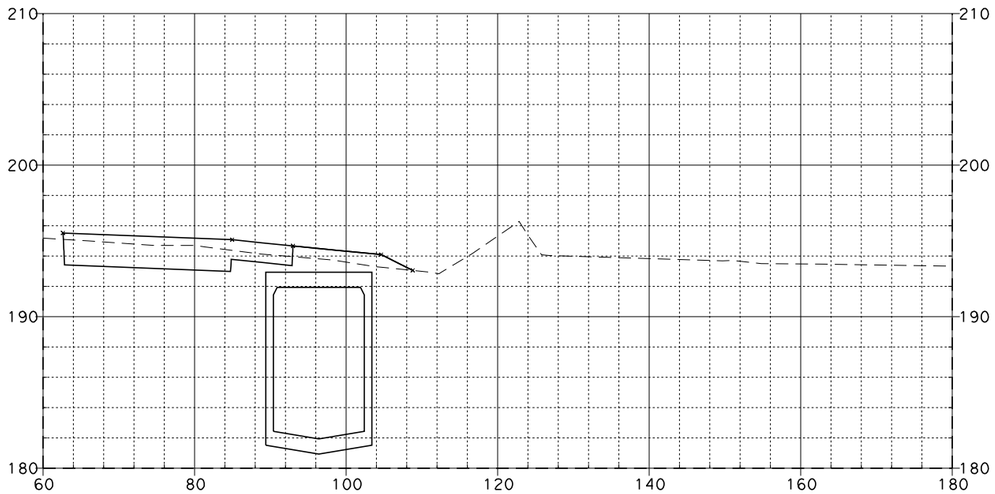

365+25.00

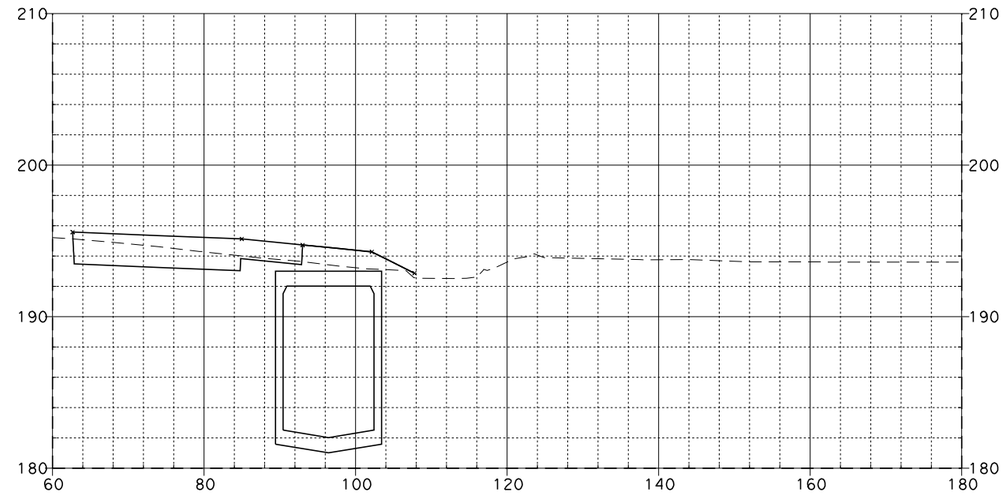

365+75.00

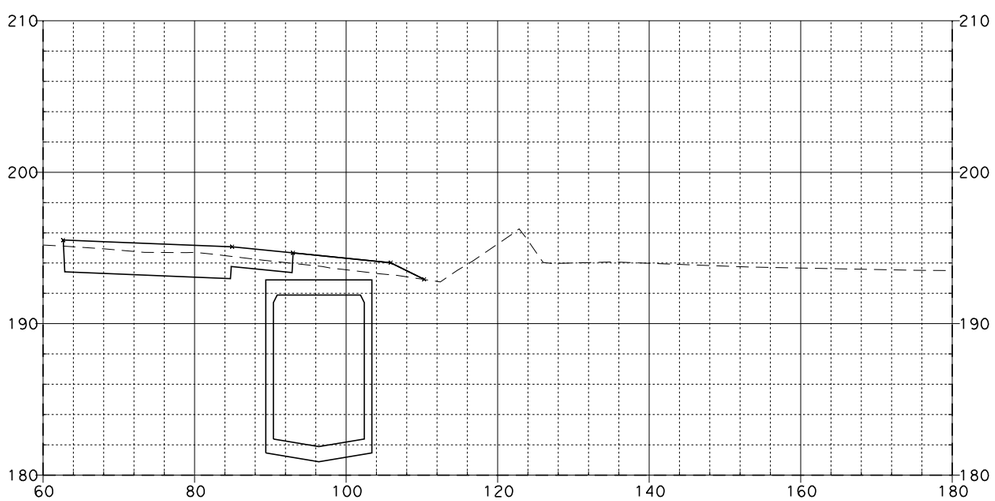

365+00.00

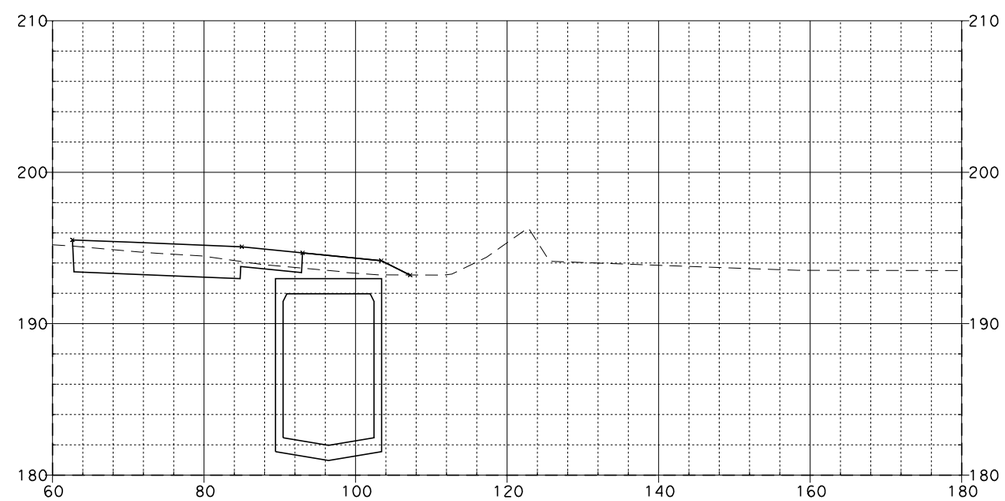

365+50.00

SR-57 MAINLINE

08\03\11

Dist	COUNTY	ROUTE	POST MILES TOTAL PROJECT	SHEET NO.	TOTAL SHEETS
12	Ora	57	12.2/15.2		

FOR EARTHWORK DEVELOPMENT ONLY

...\d0282599\Cross_Sections.dgn

EA 0F0401

SCALE: Horiz 1"=20'
Vert 1"=10'

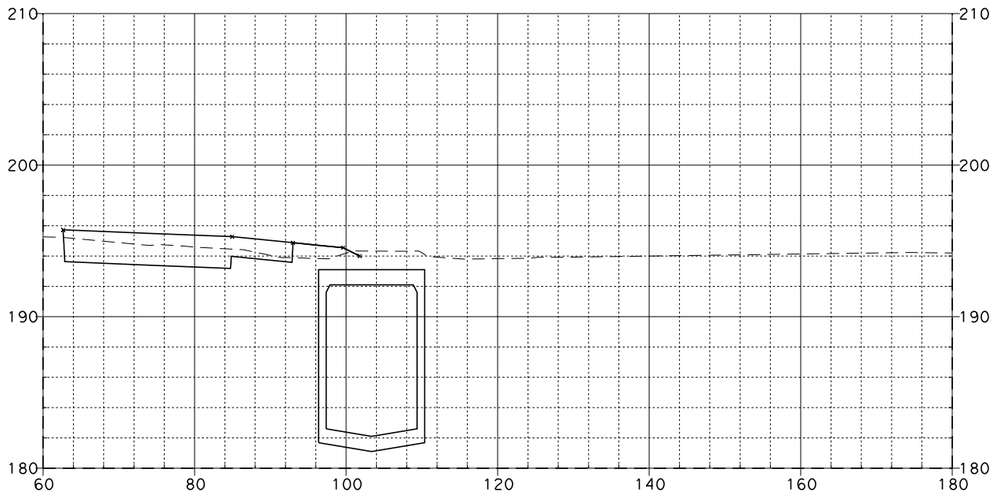

366+25.00

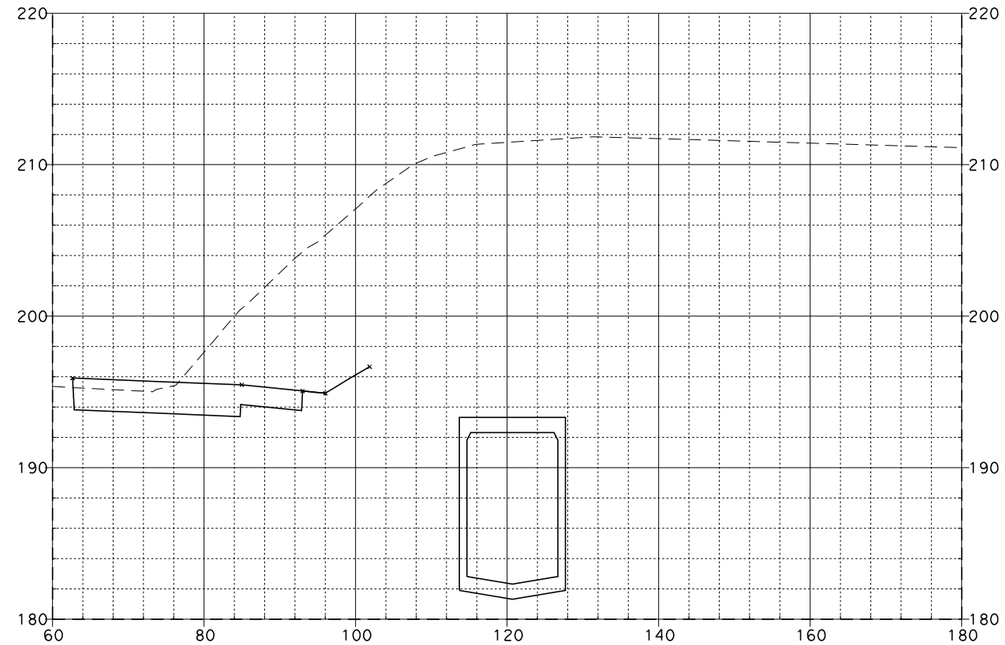

366+75.00

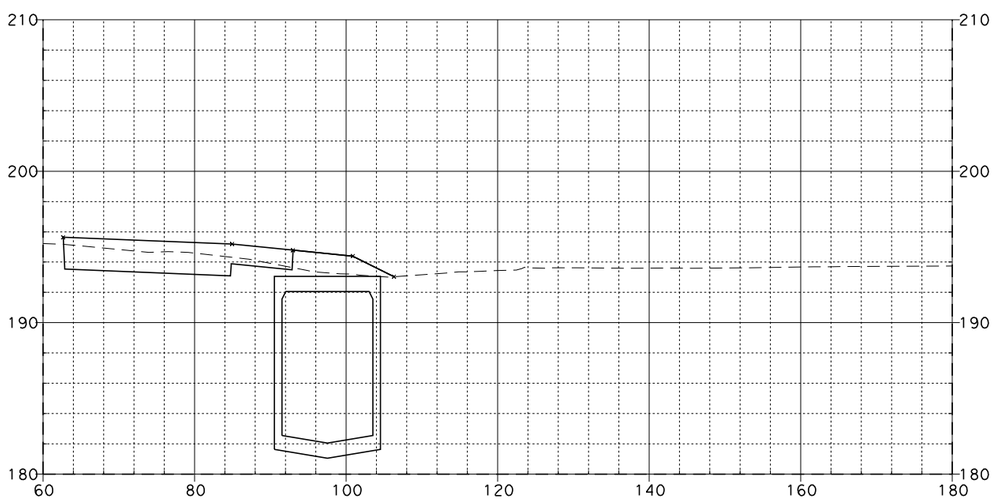

366+00.00

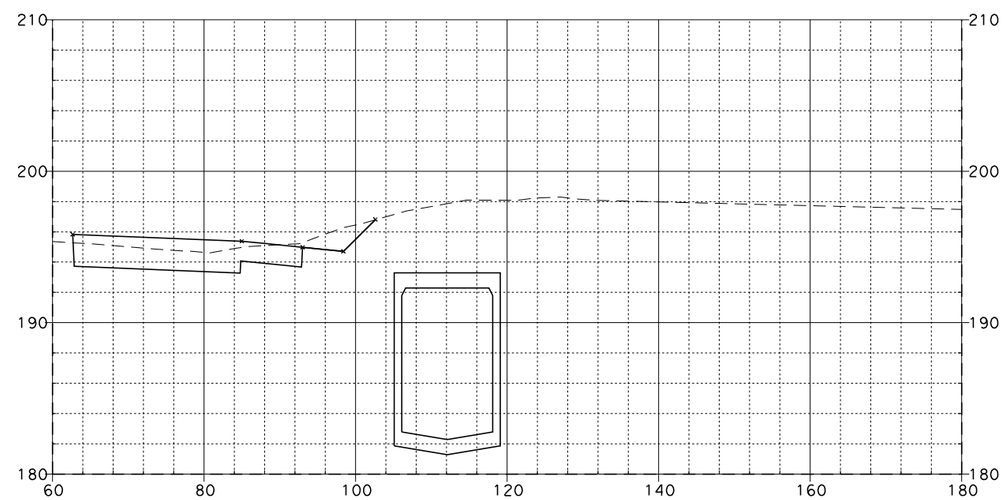

366+50.00

SR-57 MAINLINE

08\03\11

Dist	COUNTY	ROUTE	POST MILES TOTAL PROJECT	SHEET NO.	TOTAL SHEETS
12	Ora	57	12.2/15.2		

FOR EARTHWORK DEVELOPMENT ONLY

...\d0282599\Cross_Sections.dgn

EA 0F0401

SCALE: Horiz 1"=20'
Vert 1"=10'

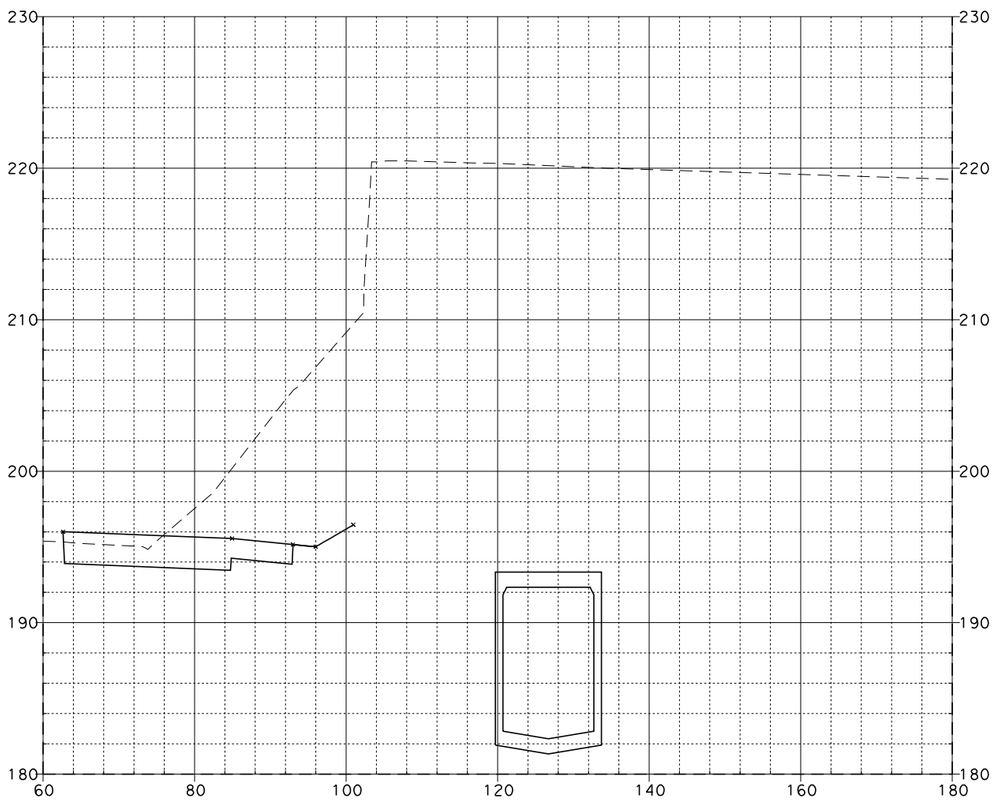

367+00.00

SR-57 MAINLINE

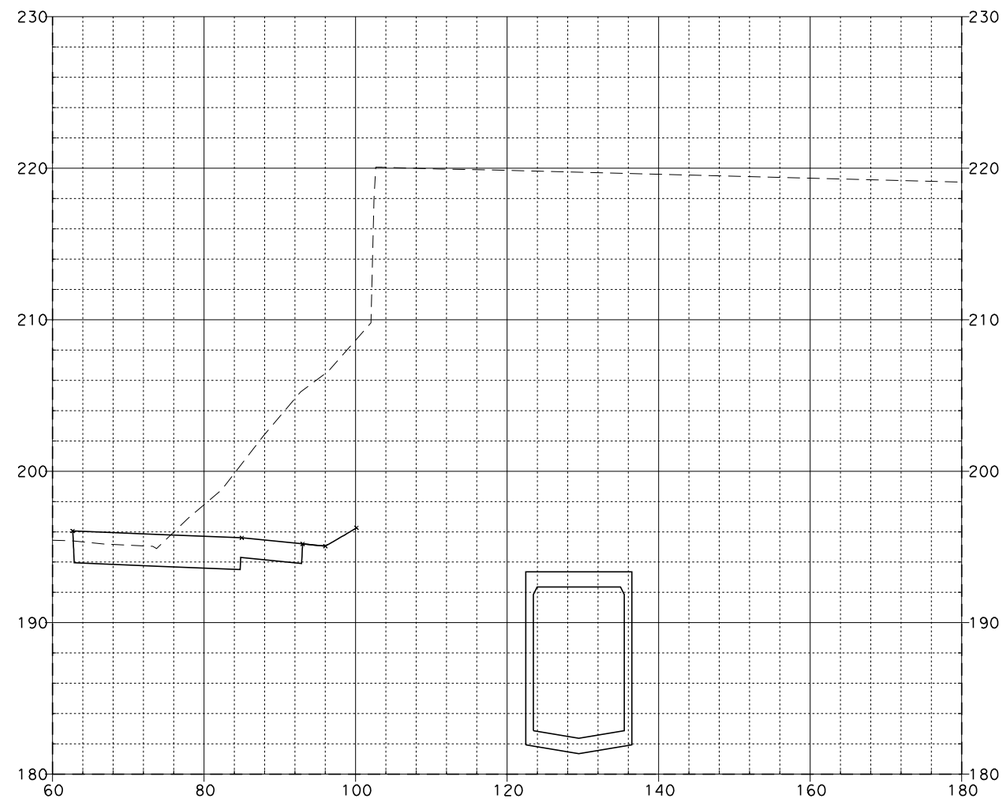

367+25.00

08\03\11

Dist	COUNTY	ROUTE	POST MILES TOTAL PROJECT	SHEET No.	TOTAL SHEETS
12	Ora	57	12.2/15.2		

FOR EARTHWORK DEVELOPMENT ONLY

...\d0282599\Cross_Sections.dgn

EA 0F0401

SCALE: Horiz 1"=20'
Vert 1"=10'

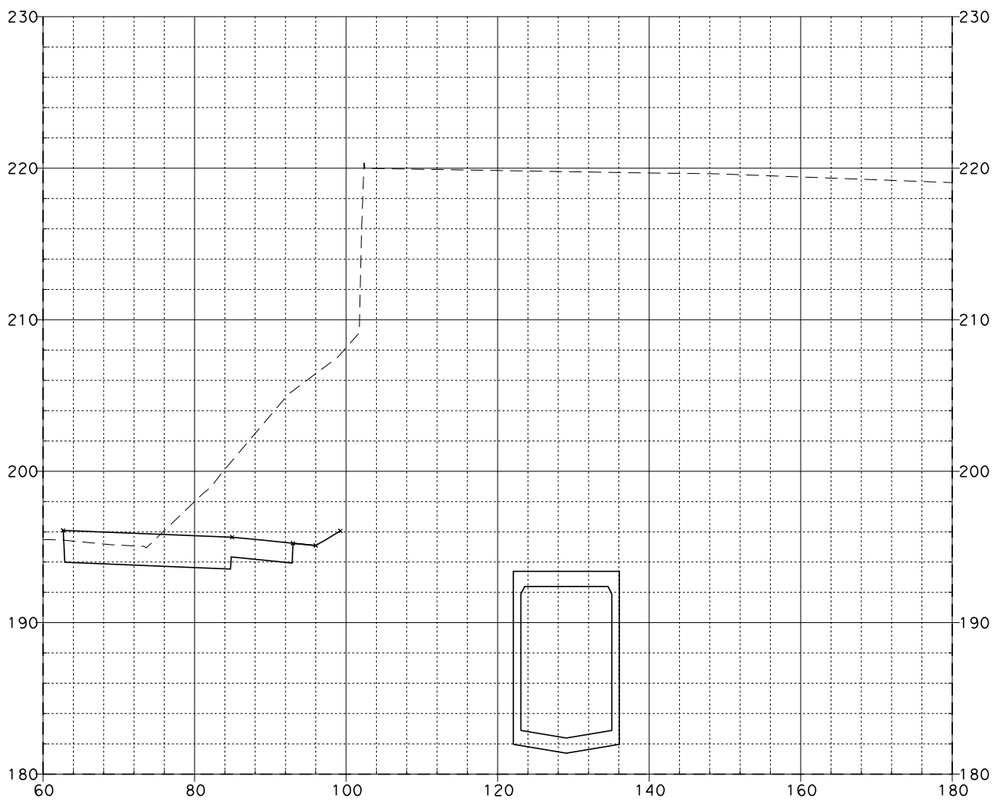

367+50.00

SR-57 MAINLINE

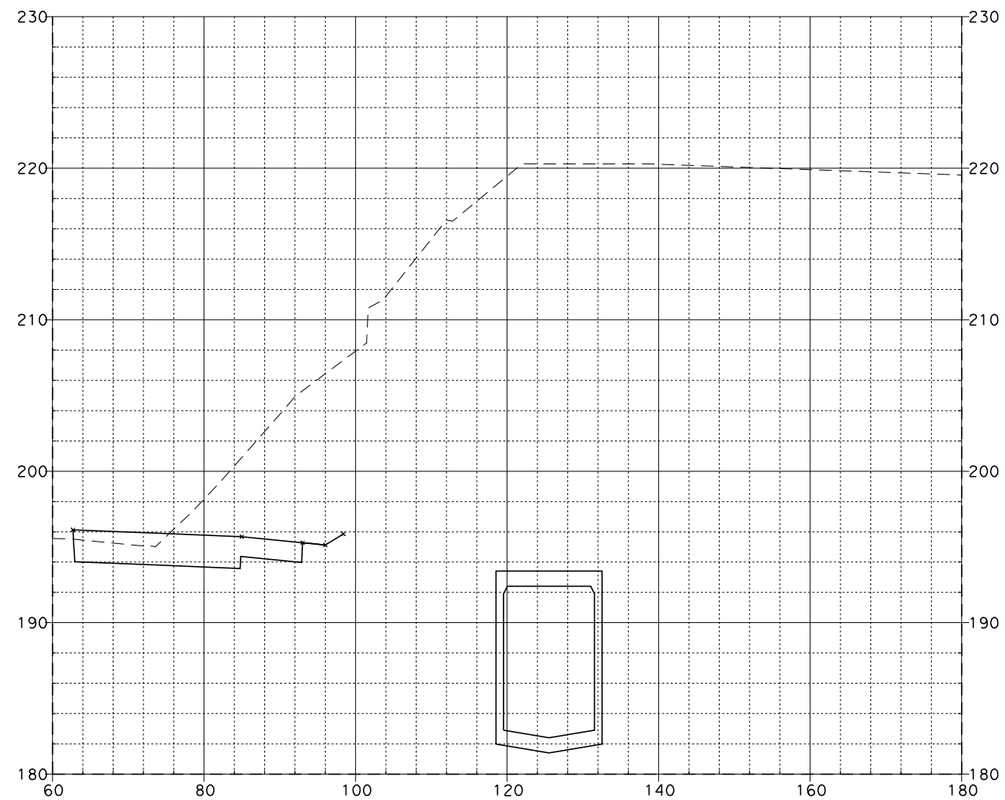

367+75.00

08\03\11

Dist	COUNTY	ROUTE	POST MILES TOTAL PROJECT	SHEET No.	TOTAL SHEETS
12	Ora	57	12.2/15.2		

FOR EARTHWORK DEVELOPMENT ONLY

...\d0282599\Cross_Sections.dgn

EA 0F0401

SCALE: Horiz 1"=20'
Vert 1"=10'

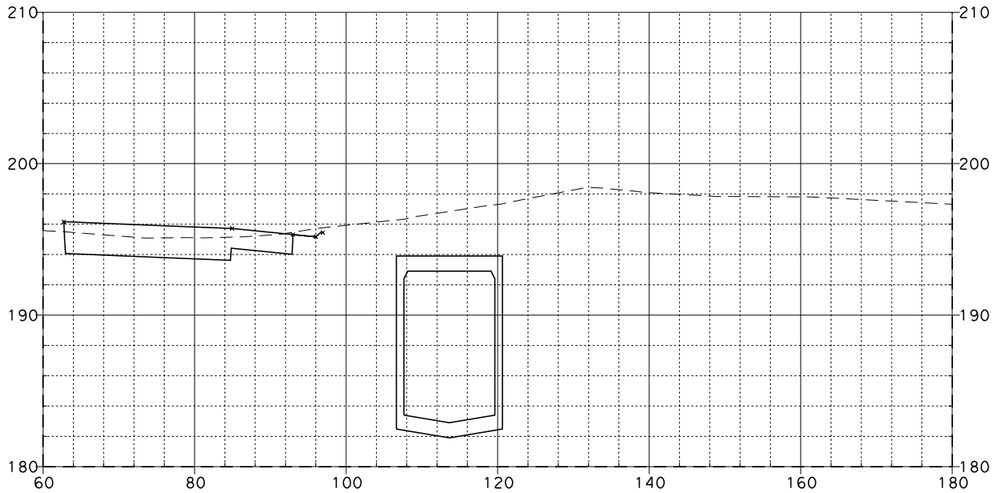

368+25.00

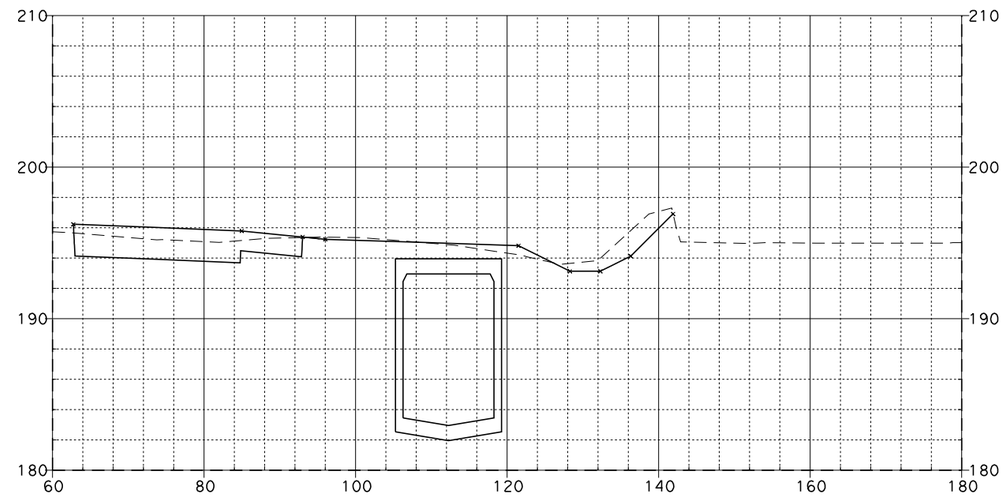

368+75.00

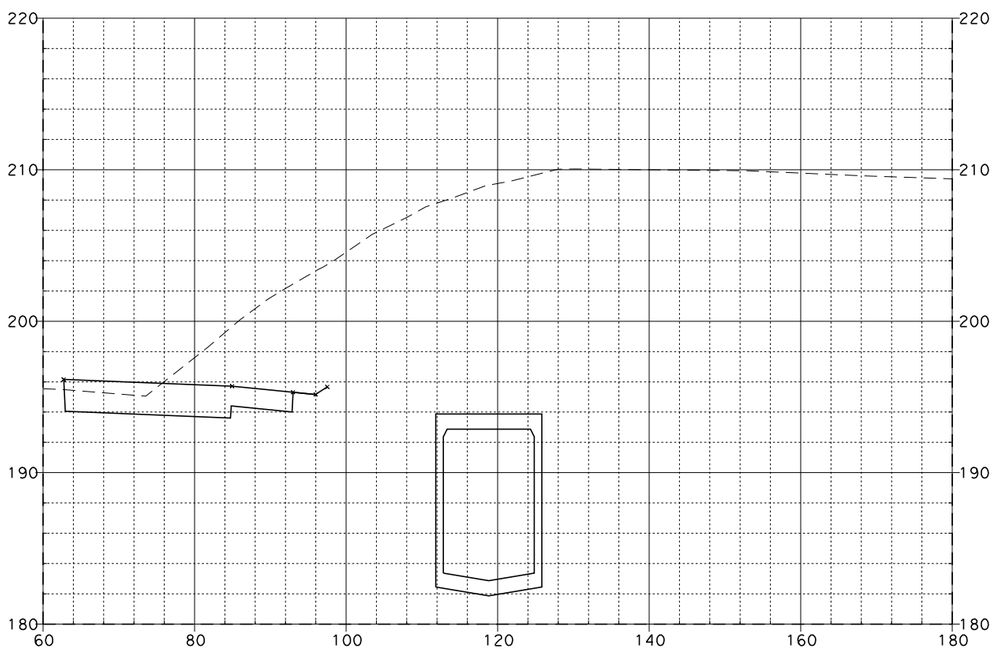

368+00.00

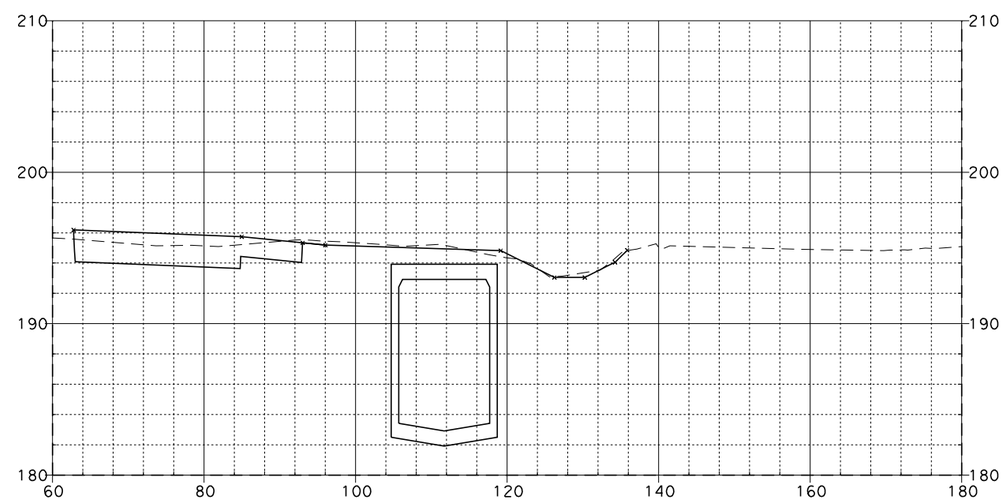

368+50.00

SR-57 MAINLINE

08\03\11

Dist	COUNTY	ROUTE	POST MILES TOTAL PROJECT	SHEET No.	TOTAL SHEETS
12	Ora	57	12.2/15.2		

FOR EARTHWORK DEVELOPMENT ONLY

...\d0282599\Cross_Sections.dgn

EA 0F0401

SCALE: Horiz 1"=20'
Vert 1"=10'

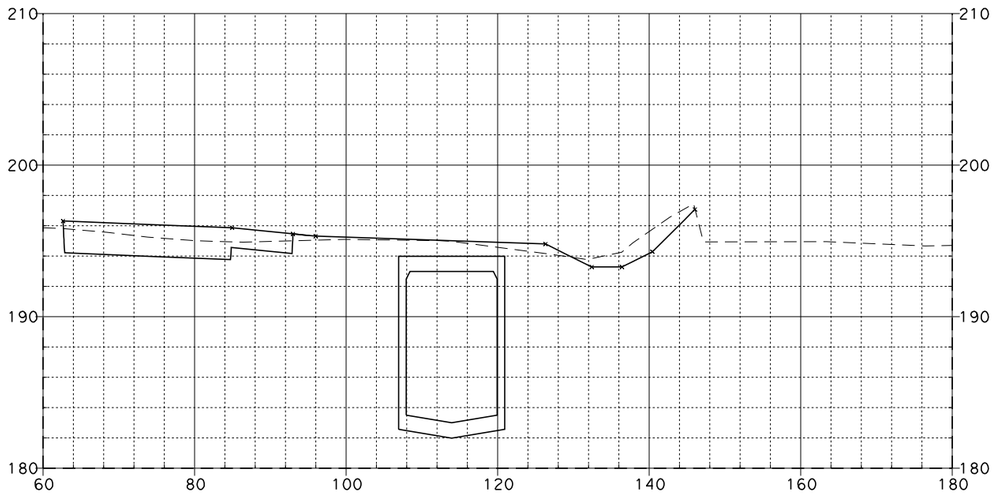

369+25.00

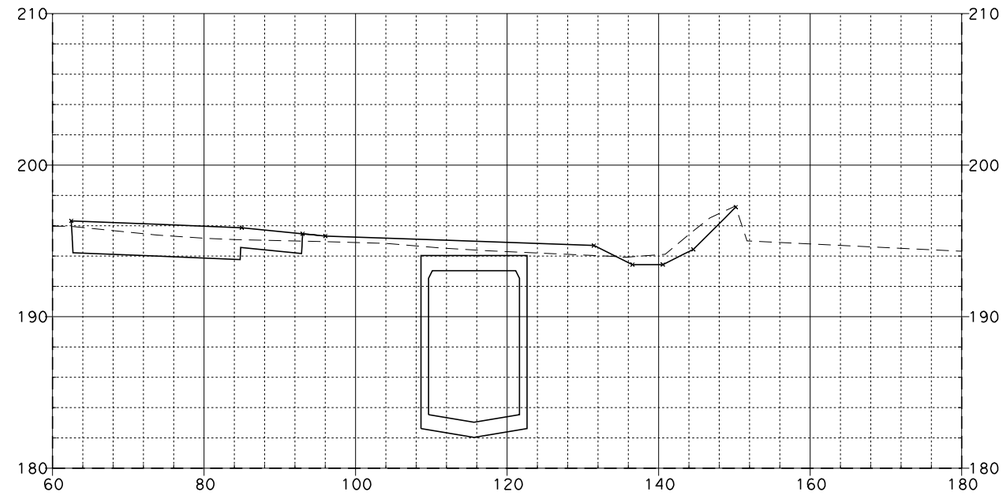

369+75.00

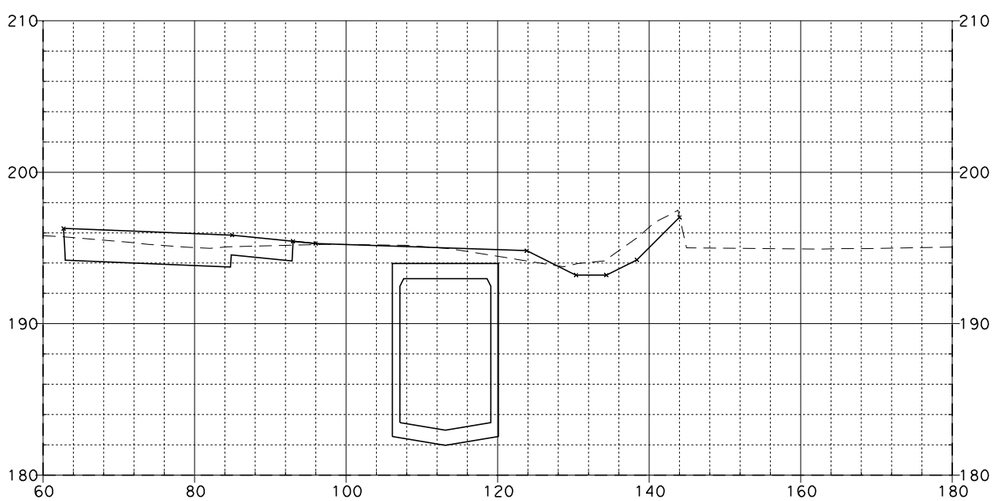

369+00.00

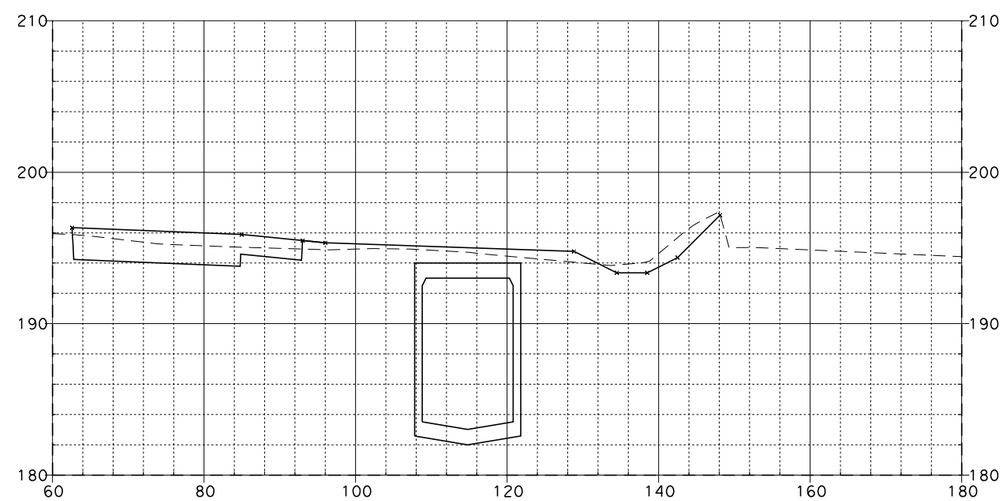

369+50.00

SR-57 MAINLINE

08\03\11

Dist	COUNTY	ROUTE	POST MILES TOTAL PROJECT	SHEET NO.	TOTAL SHEETS
12	Ora	57	12.2/15.2		

FOR EARTHWORK DEVELOPMENT ONLY

...\d0282599\Cross_Sections.dgn

EA 0F0401

SCALE: Horiz 1"=20'
Vert 1"=10'

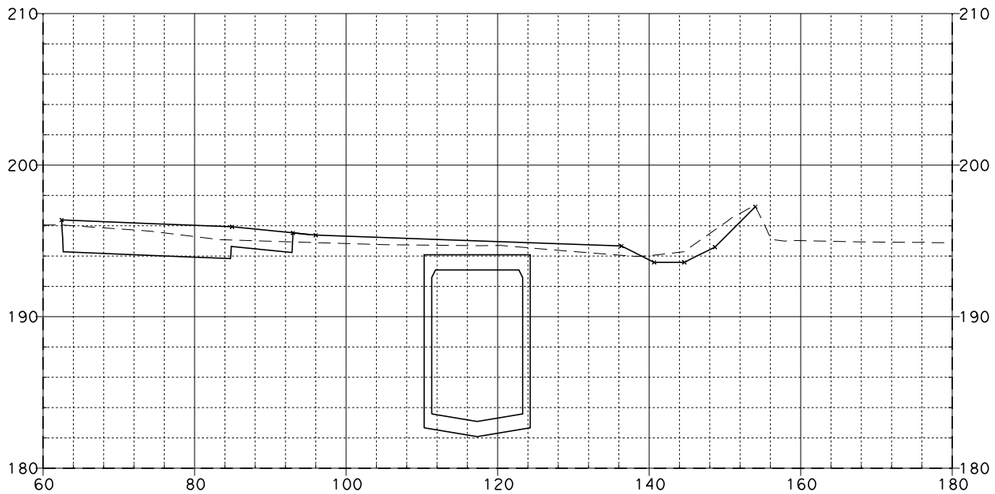

370+25.00

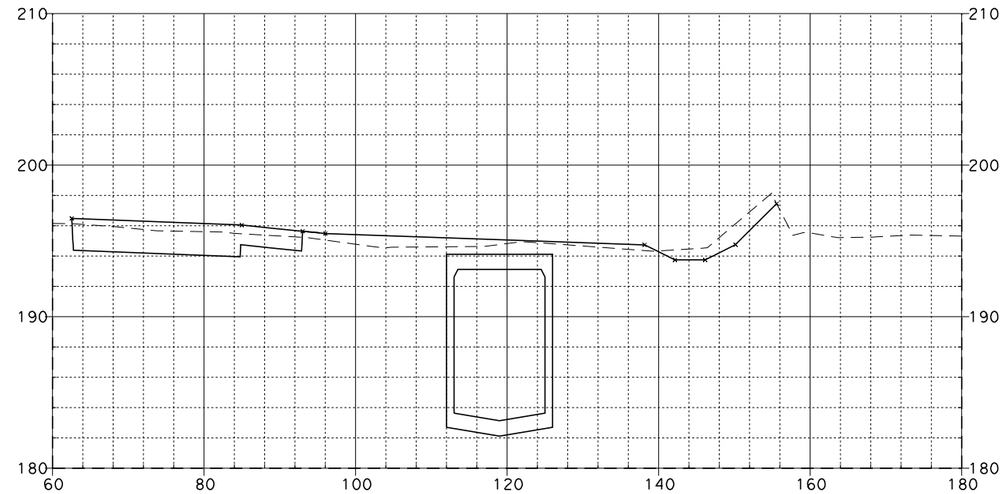

370+75.00

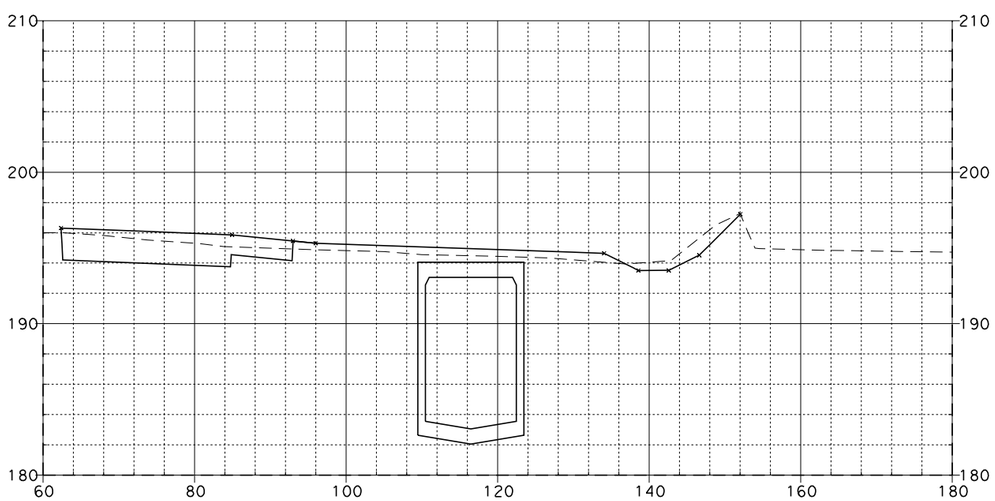

370+00.00

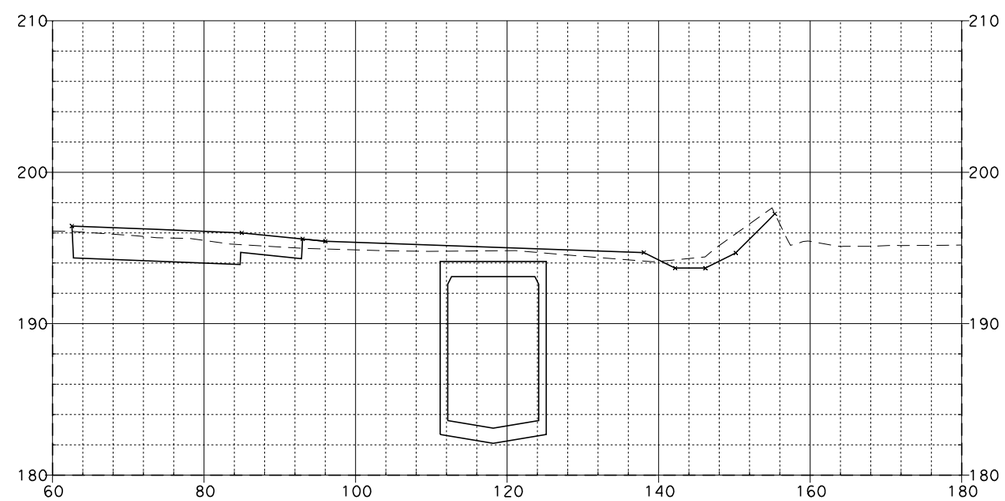

370+50.00

SR-57 MAINLINE

08\03\11

Dist	COUNTY	ROUTE	POST MILES TOTAL PROJECT	SHEET NO.	TOTAL SHEETS
12	Ora	57	12.2/15.2		

FOR EARTHWORK DEVELOPMENT ONLY

...\d0282599\Cross_Sections.dgn

EA 0F0401

SCALE: Horiz 1"=20'
Vert 1"=10'

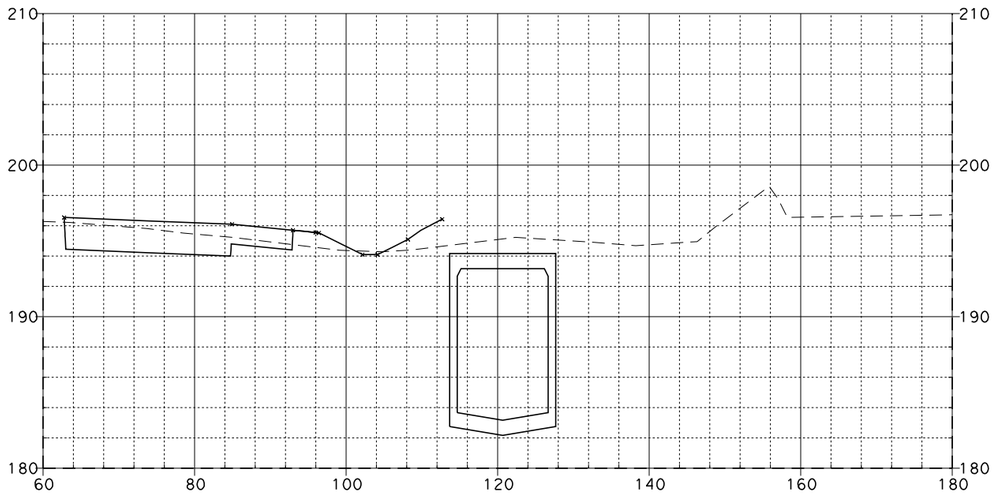

371+25.00

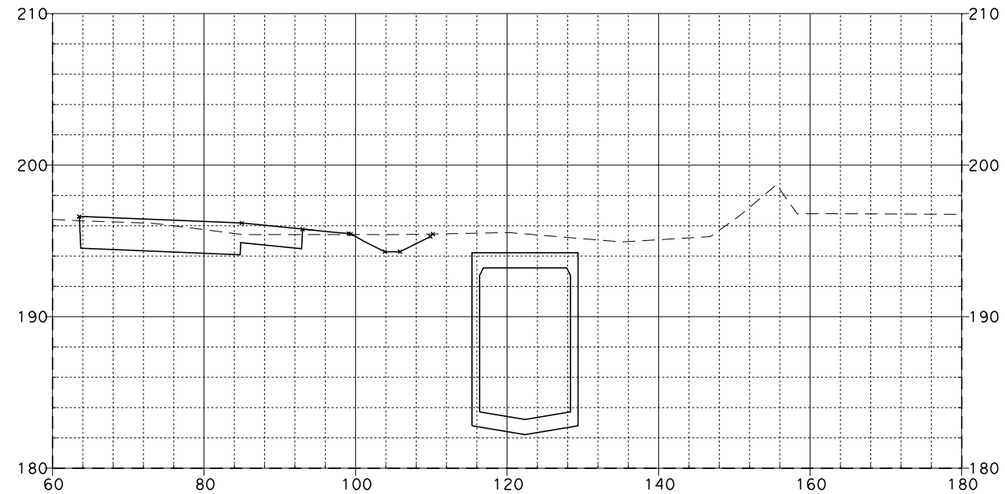

371+75.00

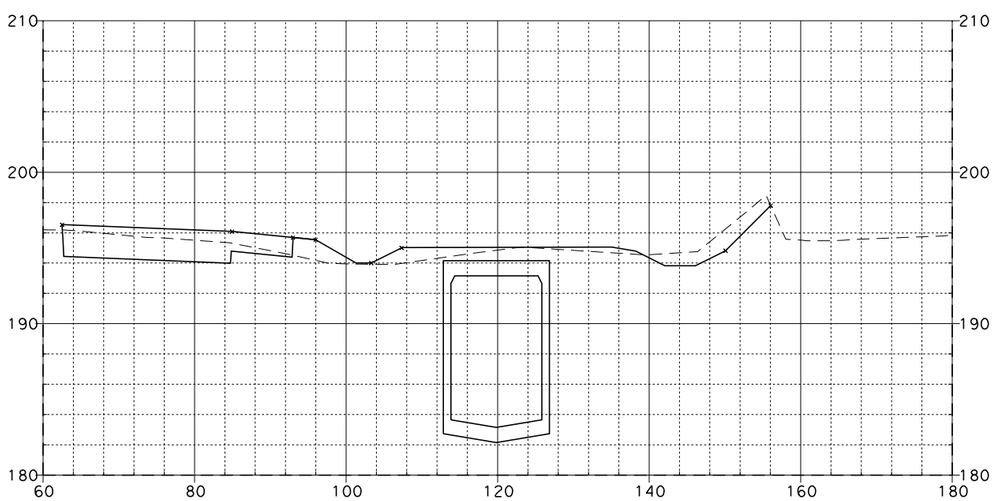

371+00.00

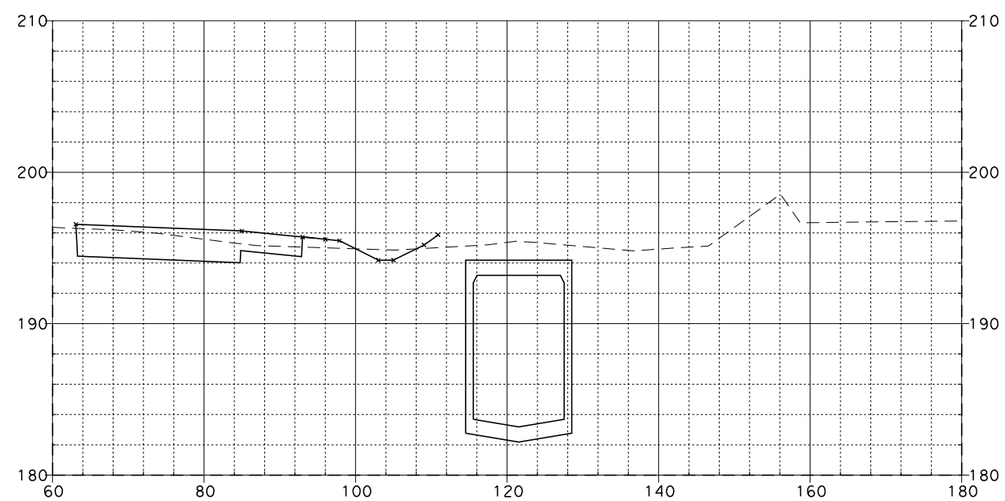

371+50.00

SR-57 MAINLINE

08\03\11

Dist	COUNTY	ROUTE	POST MILES TOTAL PROJECT	SHEET NO.	TOTAL SHEETS
12	Ora	57	12.2/15.2		

FOR EARTHWORK DEVELOPMENT ONLY

...\d0282599\Cross_Sections.dgn

EA 0F0401

SCALE: Horiz 1"=20'
Vert 1"=10'

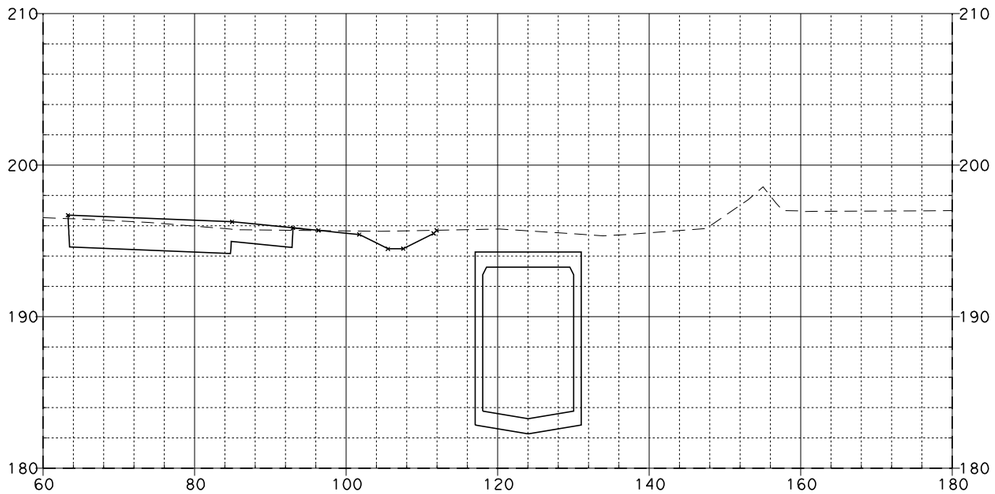

372+25.00

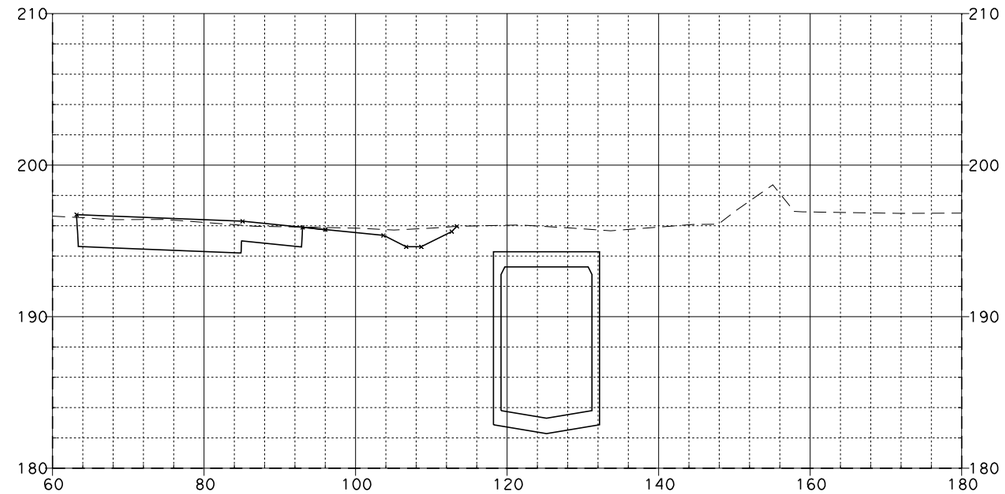

372+58.54

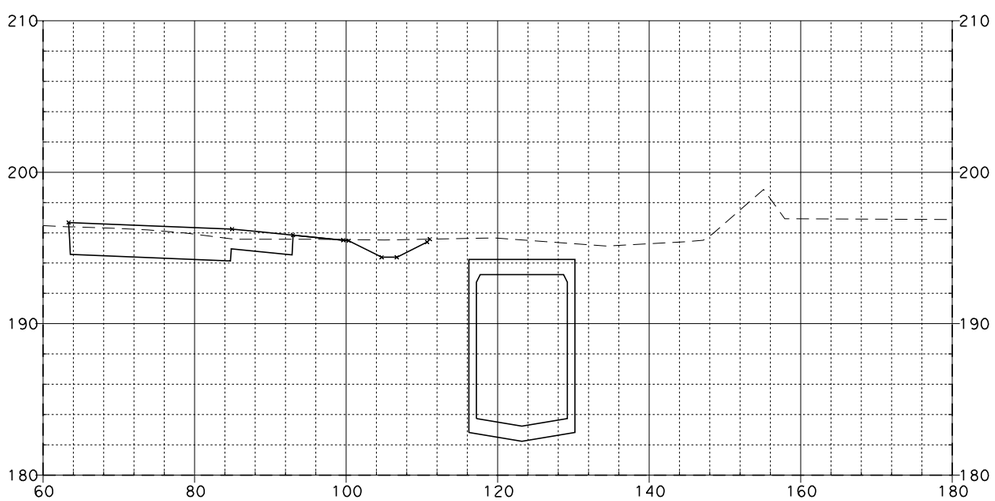

372+00.00

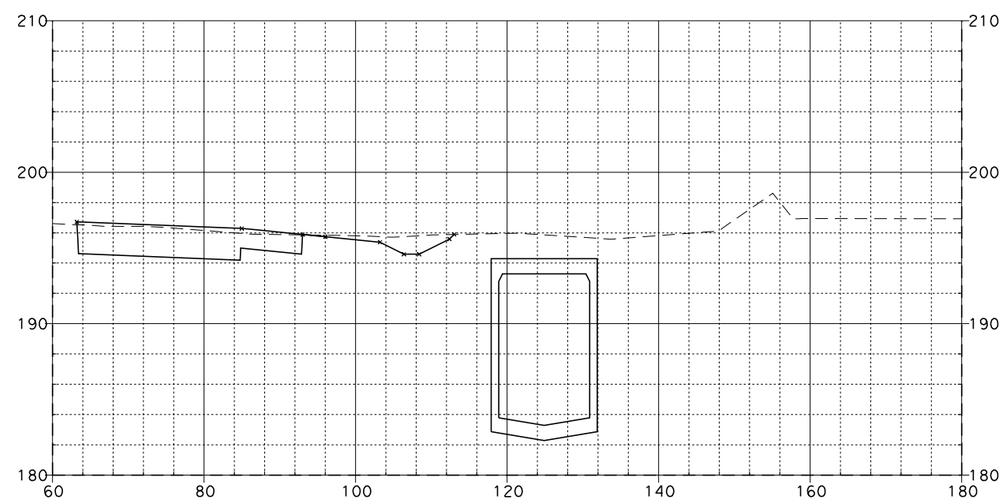

372+50.00

SR-57 MAINLINE

08\03\11

Dist	COUNTY	ROUTE	POST MILES TOTAL PROJECT	SHEET NO.	TOTAL SHEETS
12	Ora	57	12.2/15.2		

FOR EARTHWORK DEVELOPMENT ONLY

...\d0282599\Cross_Sections.dgn

EA 0F0401

SCALE: Horiz 1"=20'
Vert 1"=10'

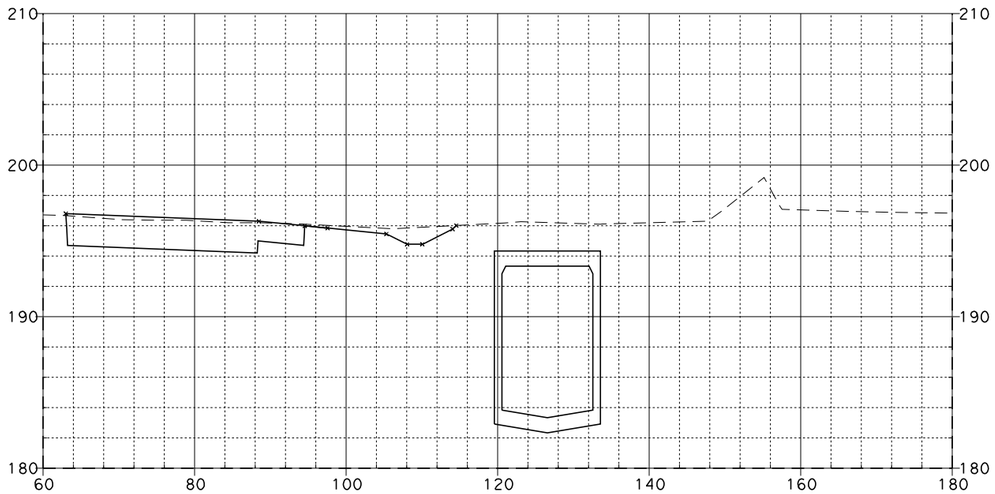

373+00.00

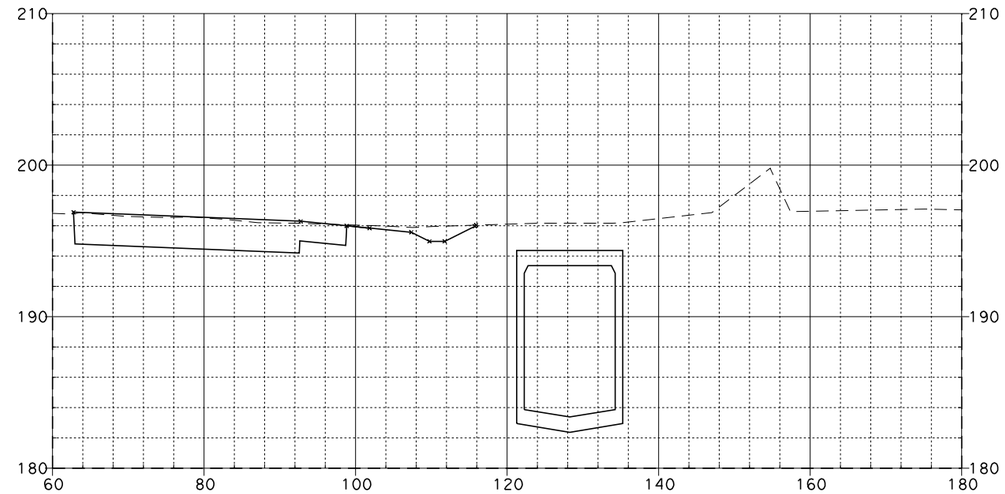

373+50.00

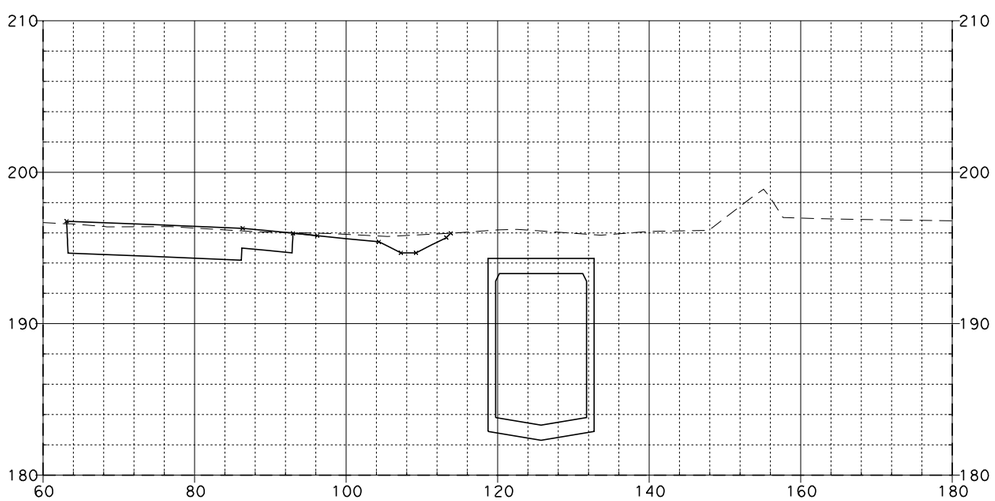

372+75.00

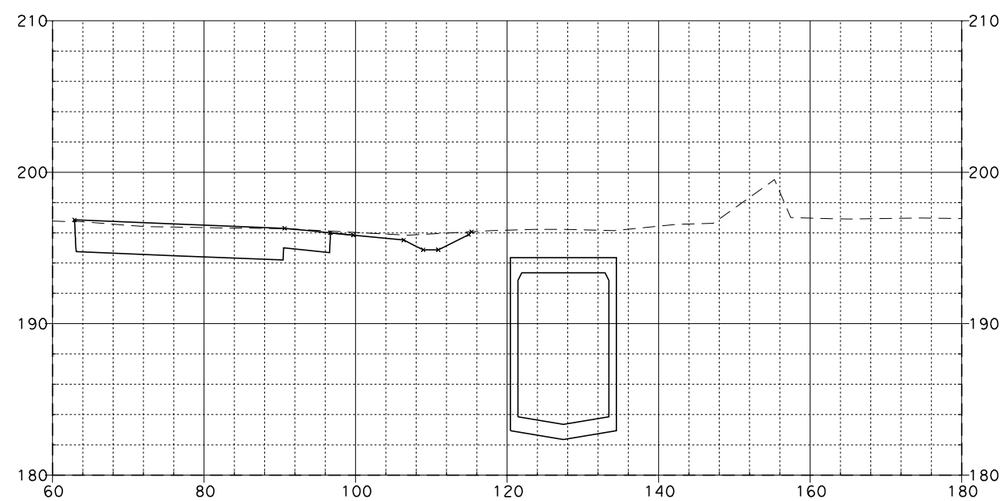

373+25.00

SR-57 MAINLINE

08\03\11

Dist	COUNTY	ROUTE	POST MILES TOTAL PROJECT	SHEET NO.	TOTAL SHEETS
12	Ora	57	12.2/15.2		

FOR EARTHWORK DEVELOPMENT ONLY

...\d0282599\Cross_Sections.dgn

EA 0F0401

SCALE: Horiz 1"=20'
Vert 1"=10'

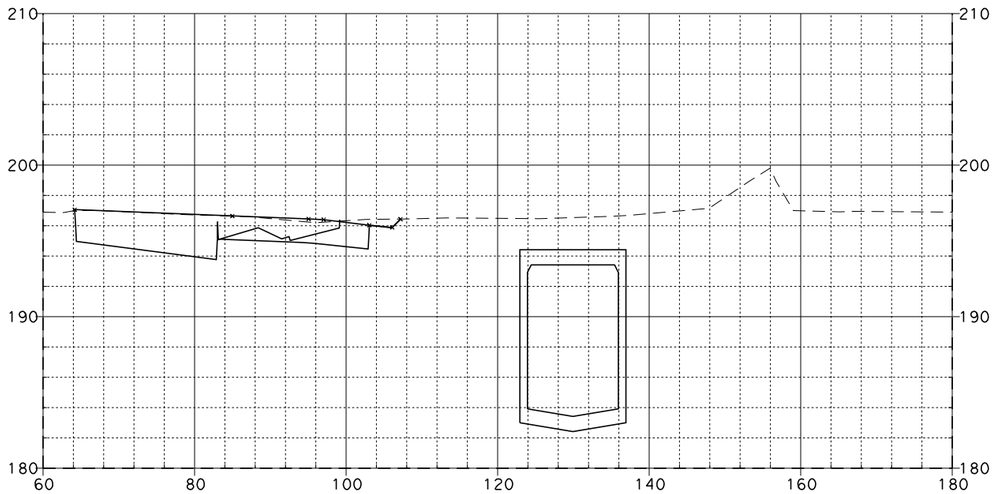

374+00.00

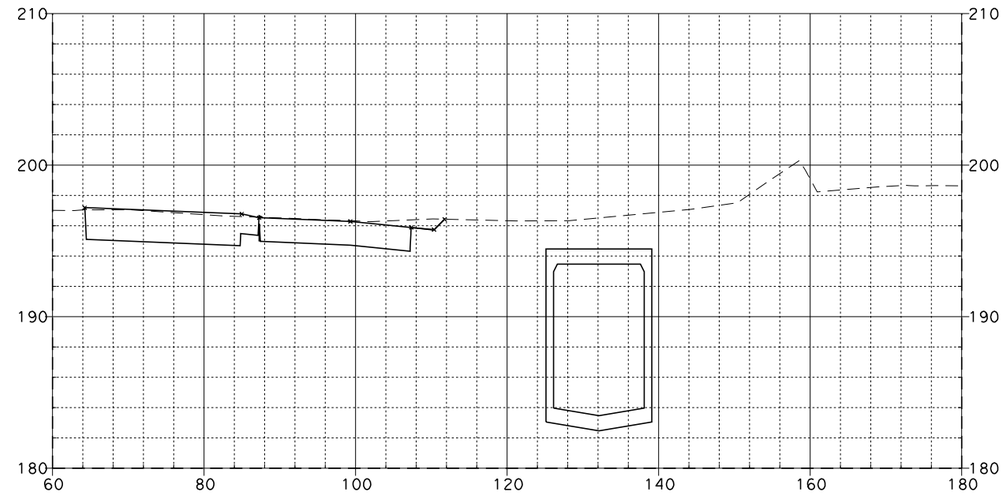

374+50.00

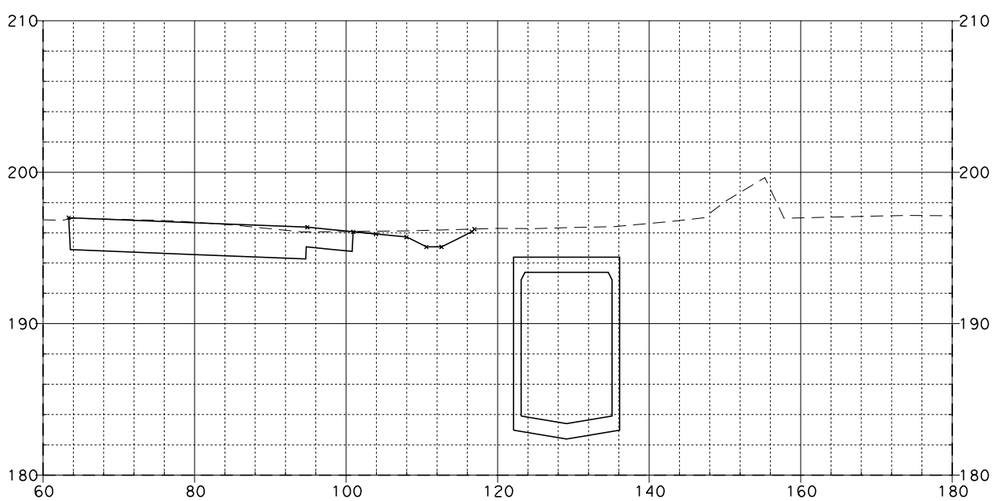

373+75.00

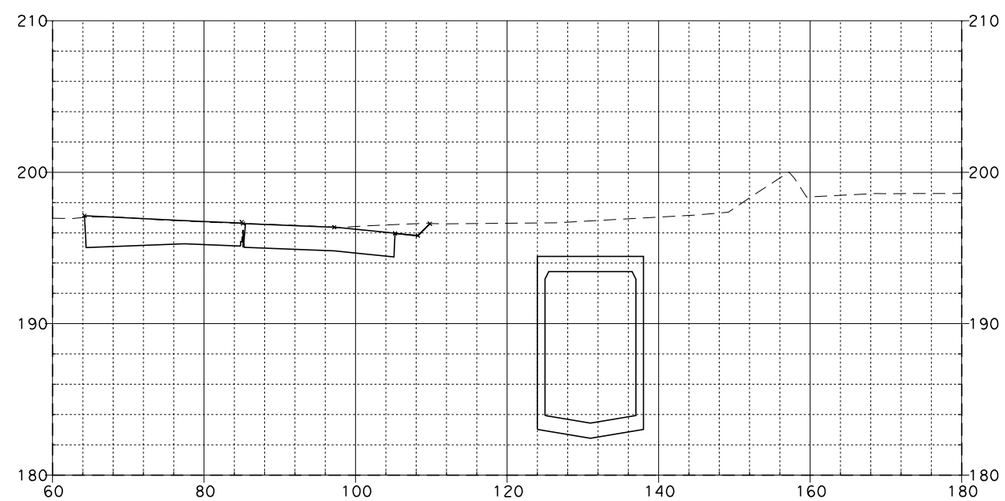

374+25.00

SR-57 MAINLINE

08\03\11

Dist	COUNTY	ROUTE	POST MILES TOTAL PROJECT	SHEET NO.	TOTAL SHEETS
12	Ora	57	12.2/15.2		

FOR EARTHWORK DEVELOPMENT ONLY

...\d0282599\Cross_Sections.dgn

EA 0F0401

SCALE: Horiz 1"=20'
Vert 1"=10'

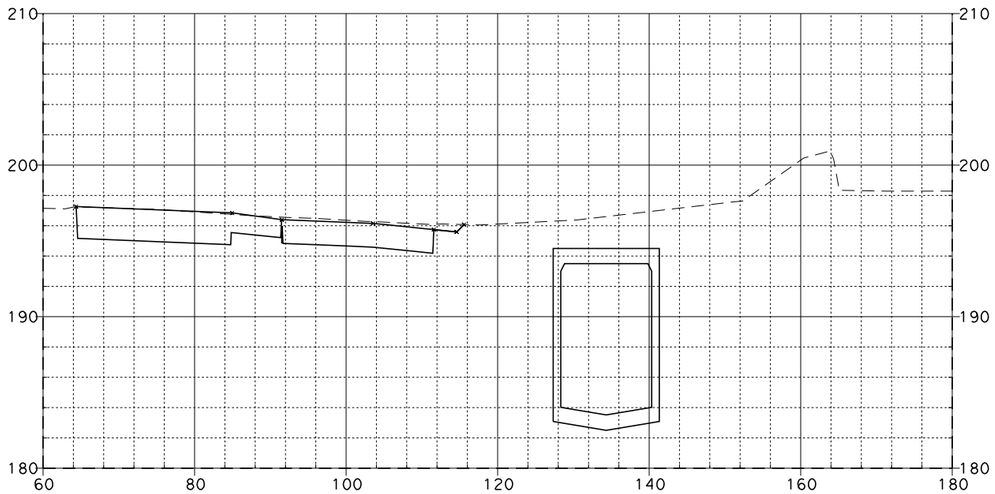

375+00.00

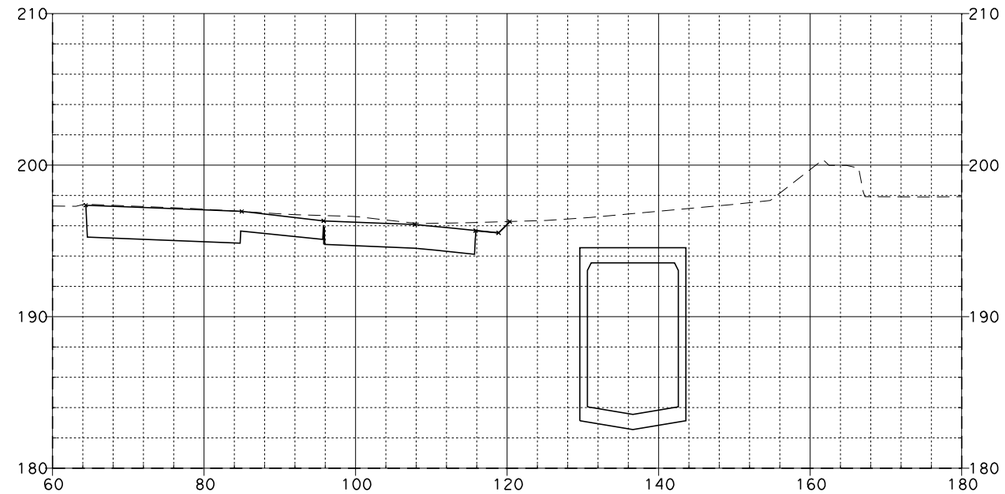

375+50.00

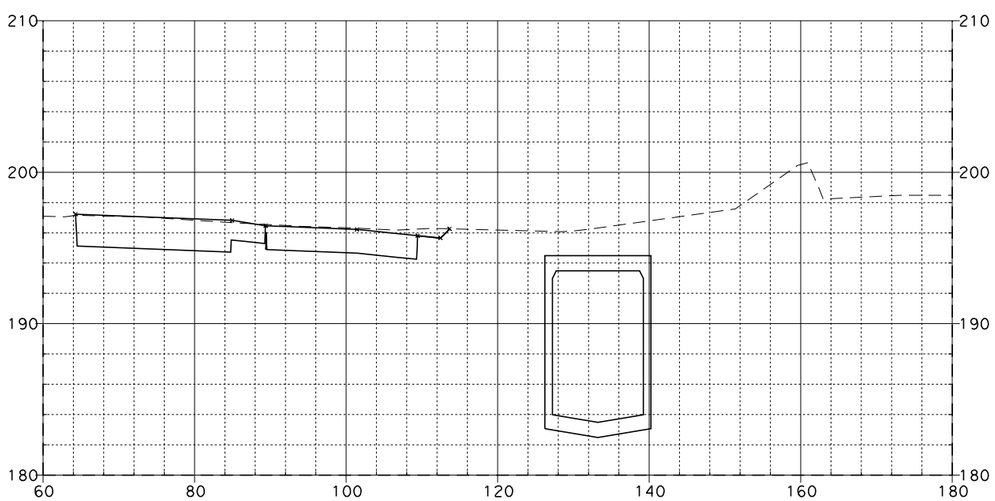

374+75.00

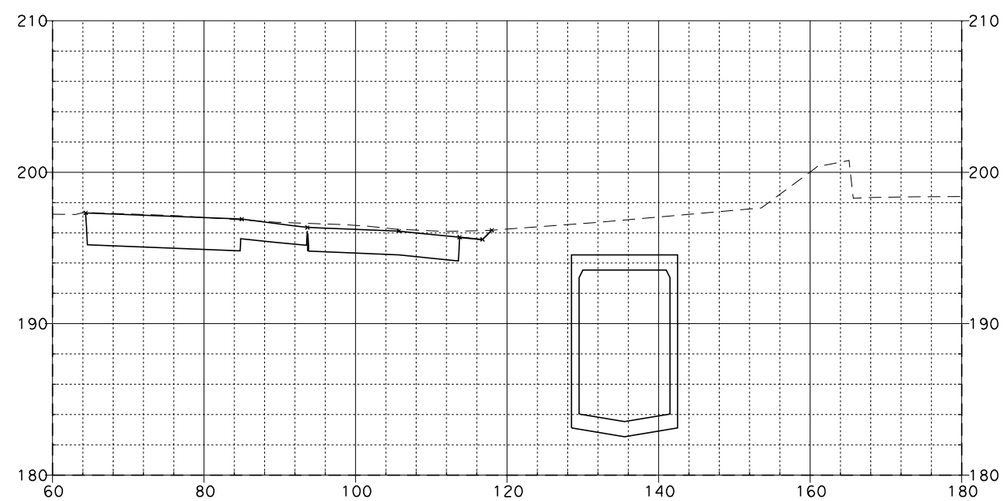

375+25.00

SR-57 MAINLINE

08\03\11

Dist	COUNTY	ROUTE	POST MILES TOTAL PROJECT	SHEET NO.	TOTAL SHEETS
12	Ora	57	12.2/15.2		

FOR EARTHWORK DEVELOPMENT ONLY

...\d0282599\Cross_Sections.dgn

EA 0F0401

SCALE: Horiz 1"=20'
Vert 1"=10'

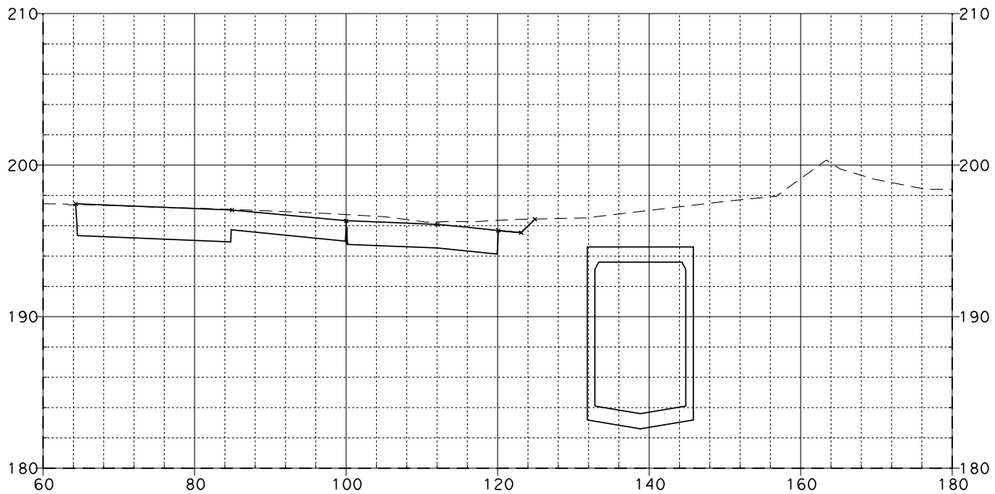

376+00.00

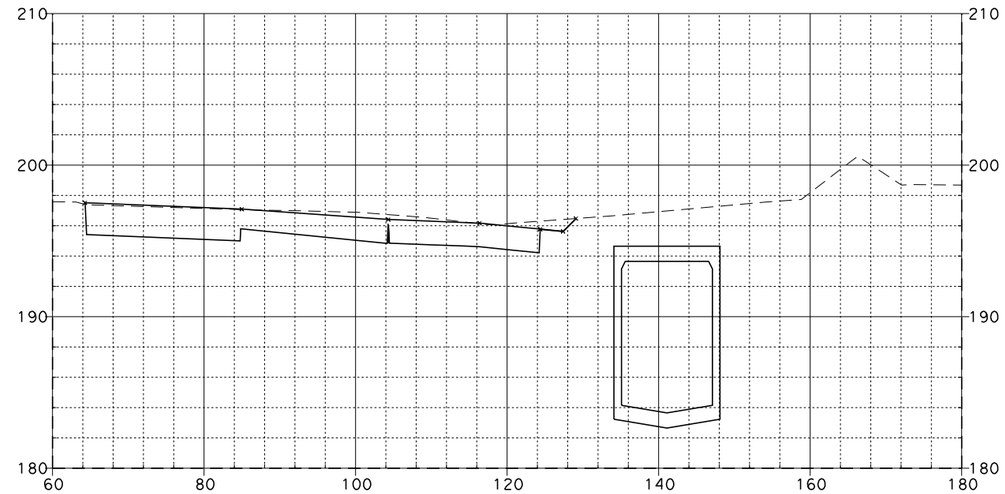

376+50.00

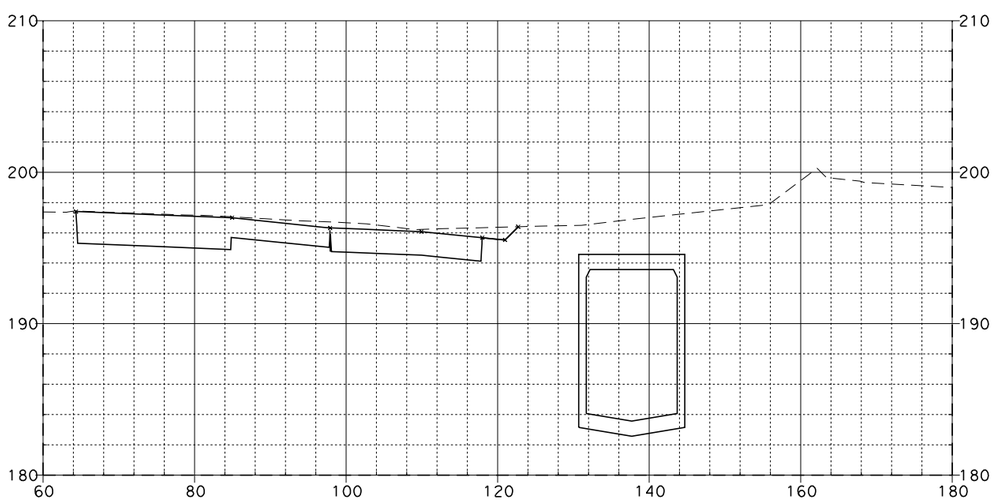

375+75.00

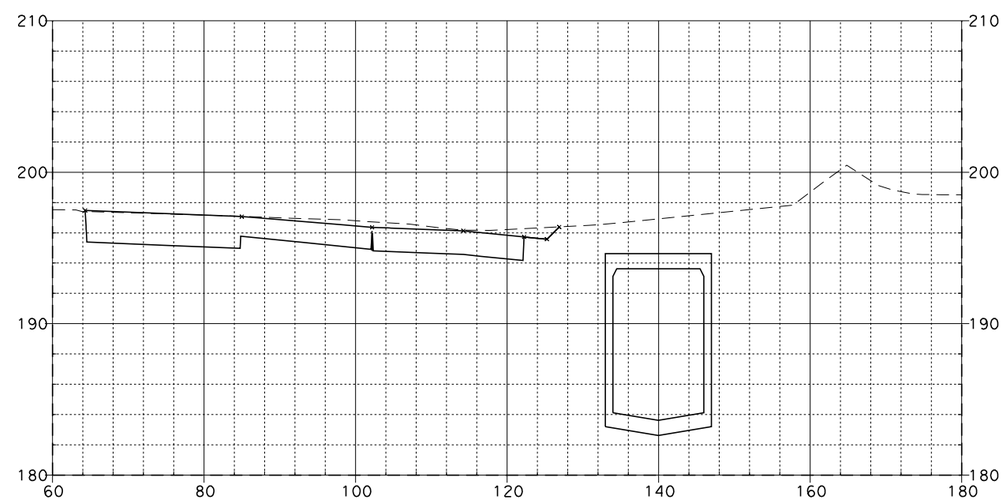

376+25.00

SR-57 MAINLINE

08\03\11

Dist	COUNTY	ROUTE	POST MILES TOTAL PROJECT	SHEET NO.	TOTAL SHEETS
12	Ora	57	12.2/15.2		

FOR EARTHWORK DEVELOPMENT ONLY

...\d0282599\Cross_Sections.dgn

EA 0F0401

SCALE: Horiz 1"=20'
Vert 1"=10'

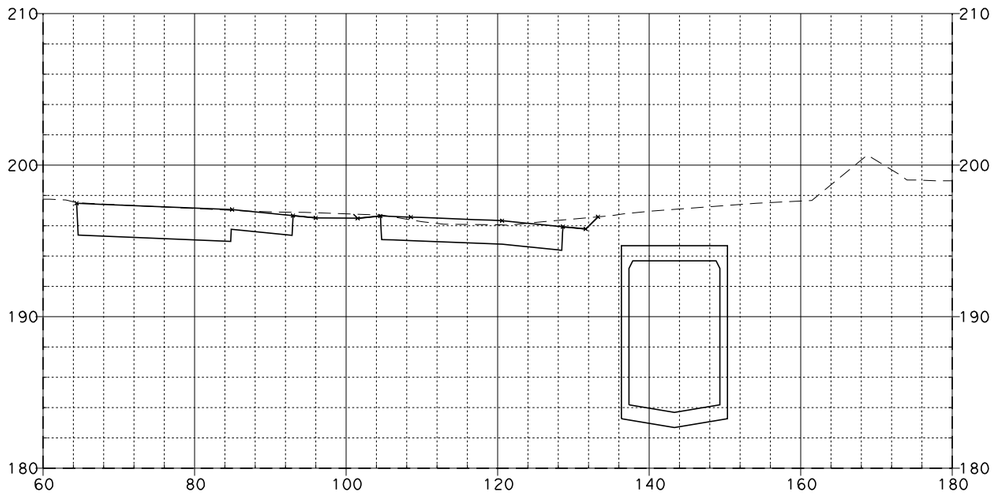

377+00.00

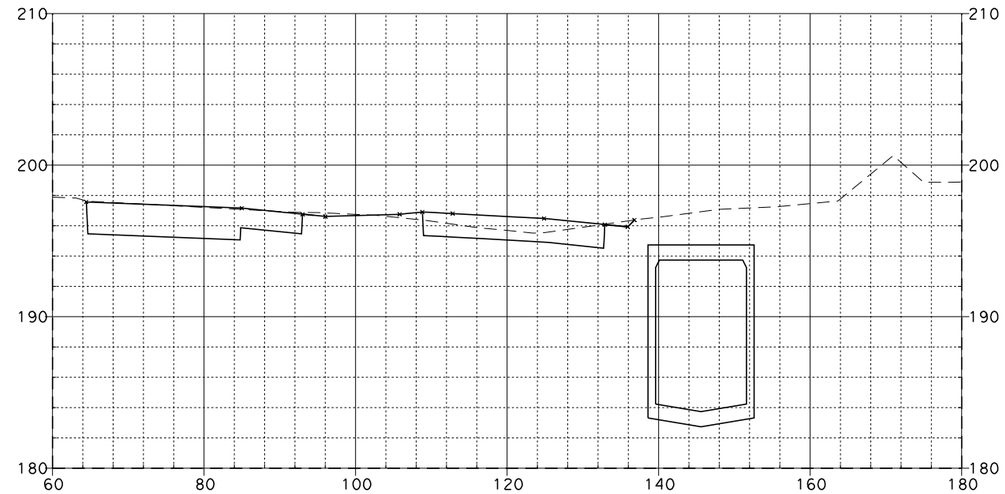

377+50.00

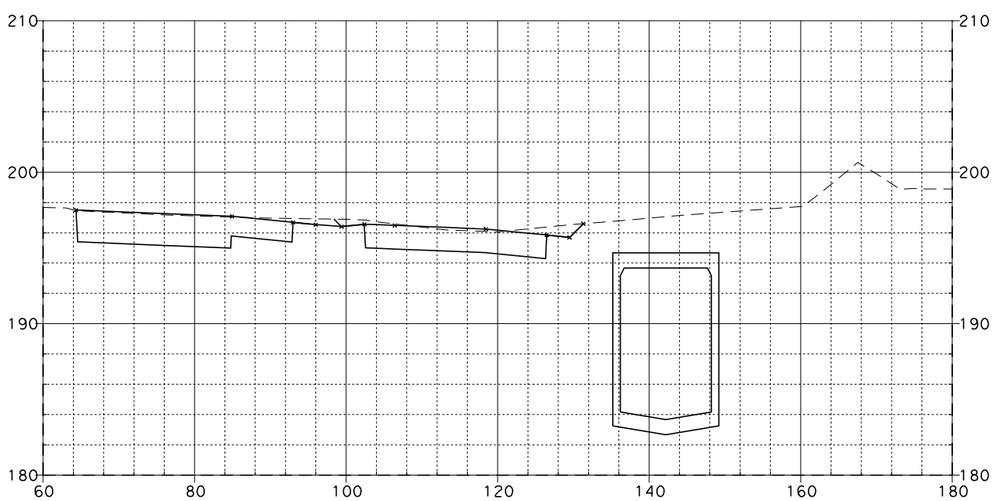

376+75.00

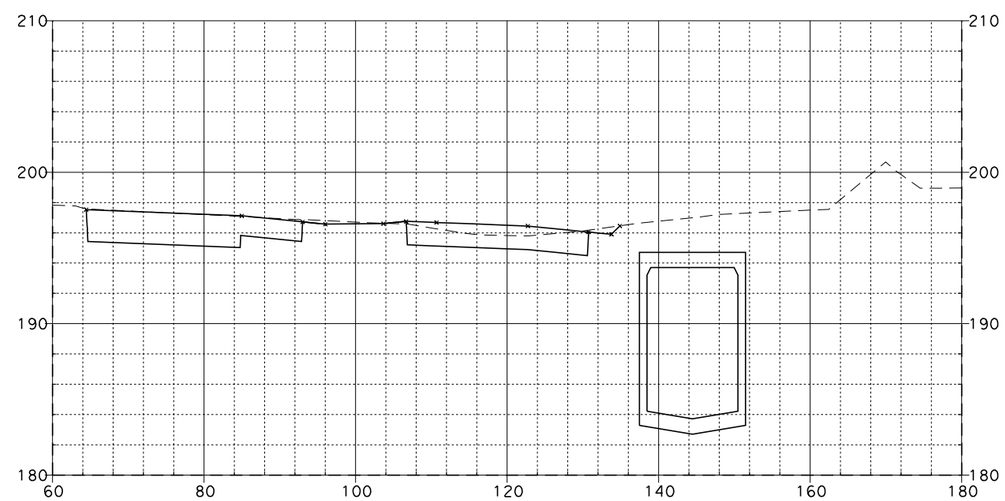

377+25.00

SR-57 MAINLINE

08\03\11

Dist	COUNTY	ROUTE	POST MILES TOTAL PROJECT	SHEET NO.	TOTAL SHEETS
12	Ora	57	12.2/15.2		

FOR EARTHWORK DEVELOPMENT ONLY

...\d0282599\Cross_Sections.dgn

EA 0F0401

SCALE: Horiz 1"=20'
Vert 1"=10'

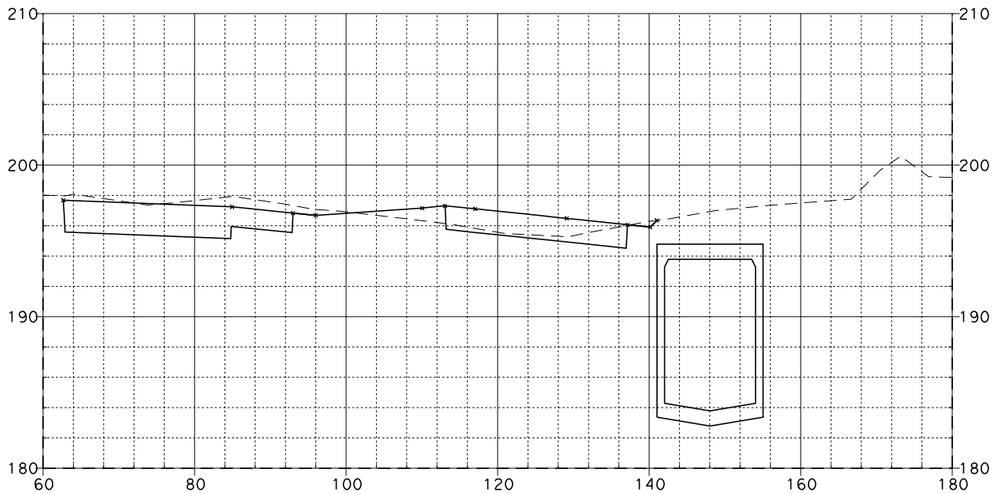

378+00.00

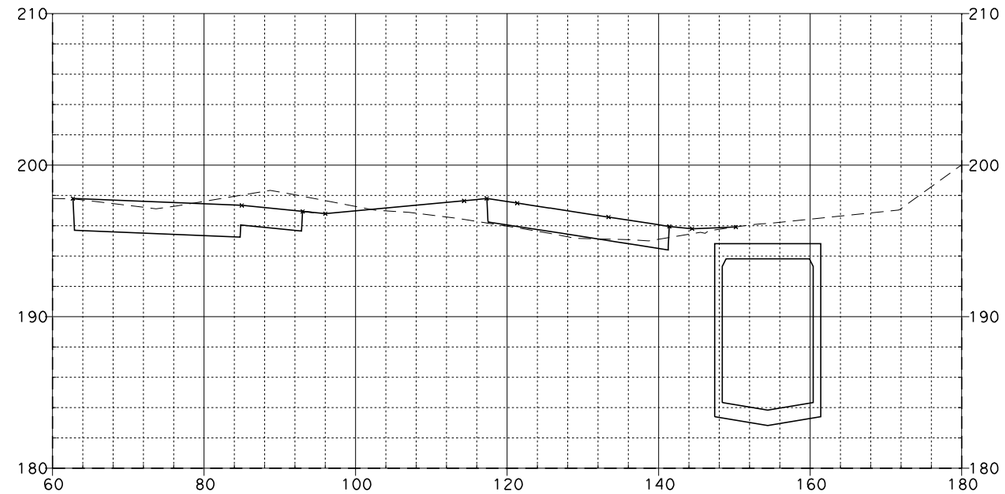

378+50.00

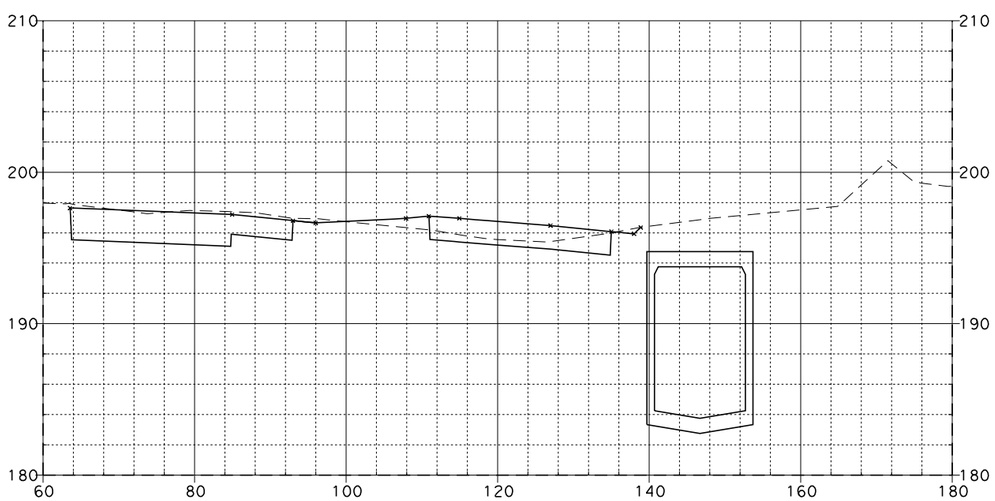

377+75.00

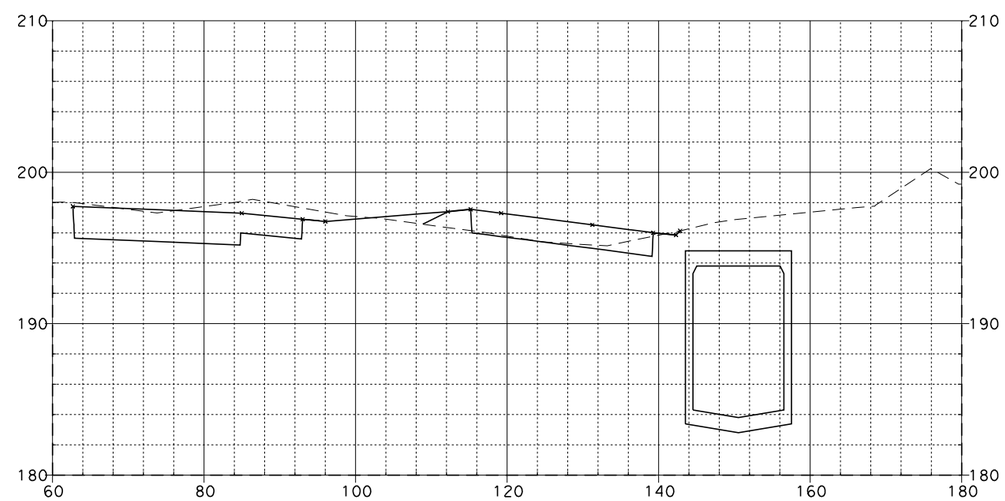

378+25.00

SR-57 MAINLINE

08\03\11

Dist	COUNTY	ROUTE	POST MILES TOTAL PROJECT	SHEET NO.	TOTAL SHEETS
12	Ora	57	12.2/15.2		

FOR EARTHWORK DEVELOPMENT ONLY

...\d0282599\Cross_Sections.dgn

EA 0F0401

SCALE: Horiz 1"=20'
Vert 1"=10'

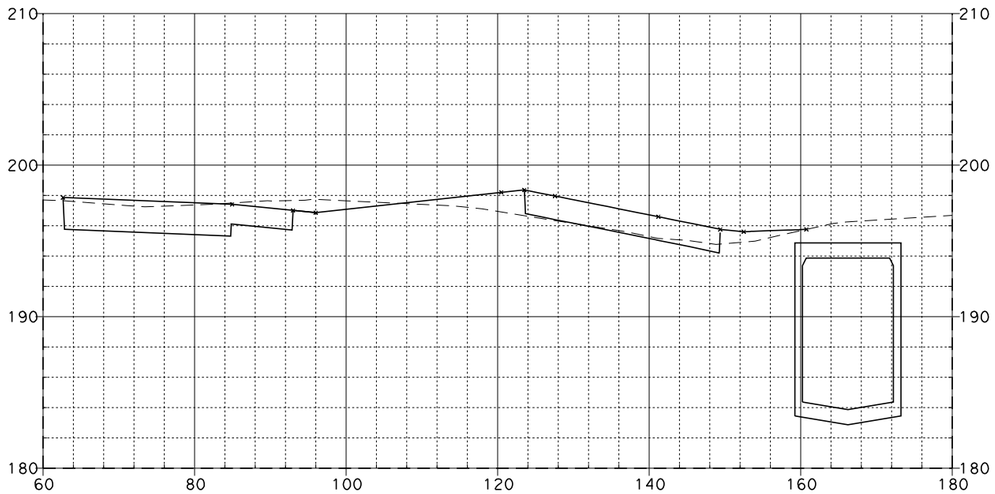

379+00.00

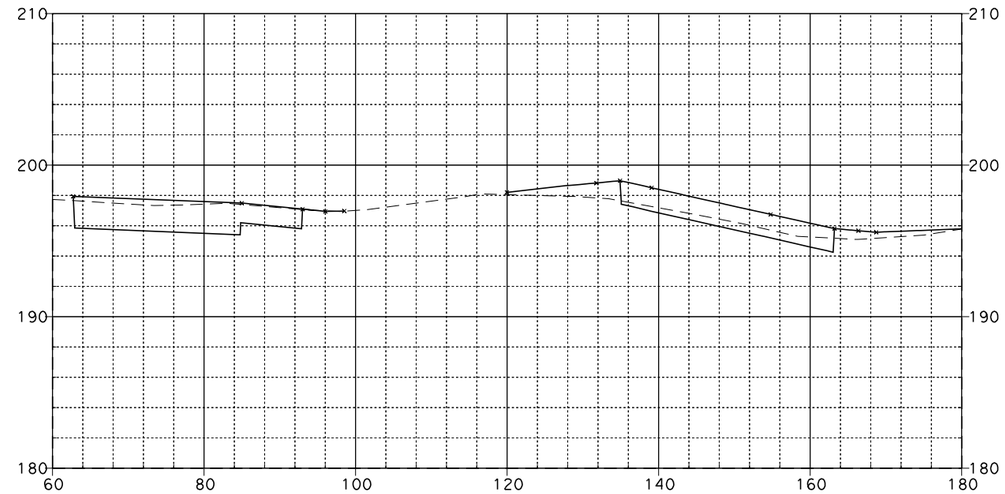

379+50.00

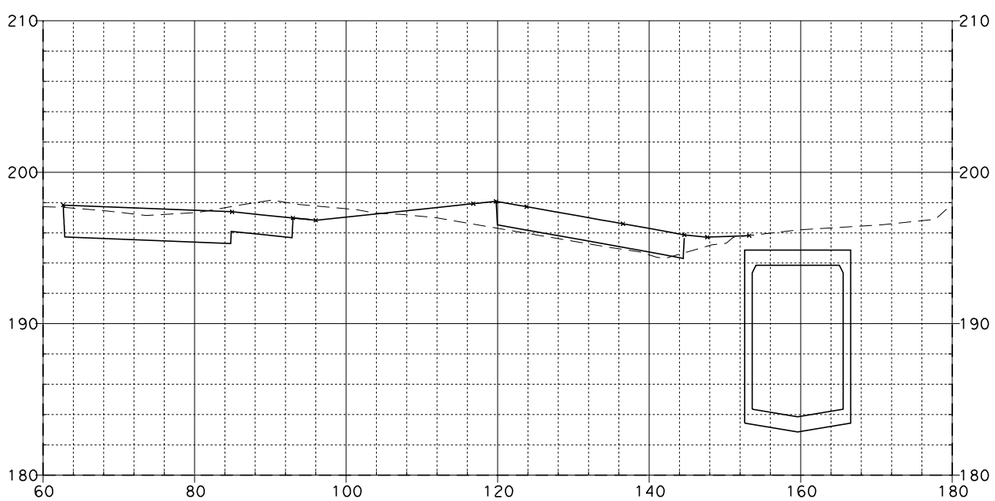

378+75.00

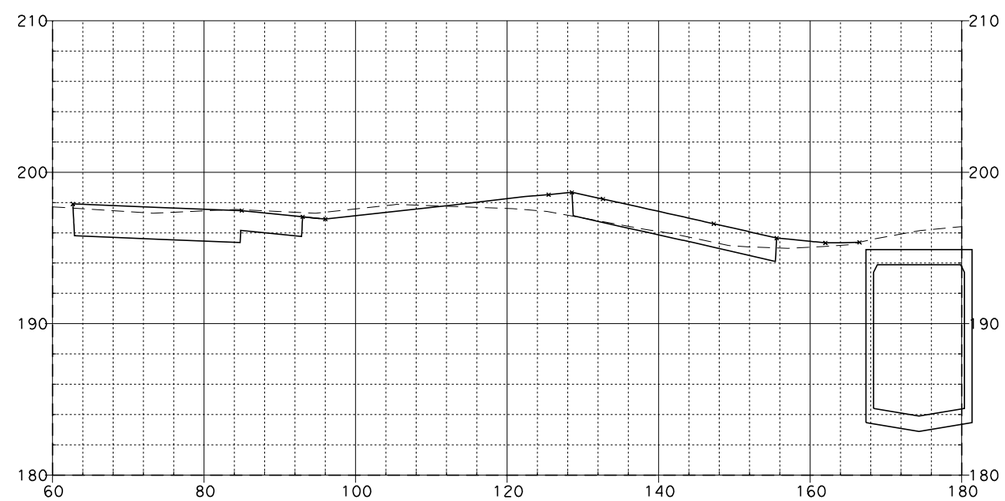

379+25.00

SR-57 MAINLINE

08\03\11

Dist	COUNTY	ROUTE	POST MILES TOTAL PROJECT	SHEET NO.	TOTAL SHEETS
12	Ora	57	12.2/15.2		

FOR EARTHWORK DEVELOPMENT ONLY

...\d0282599\Cross_Sections.dgn

EA 0F0401

SCALE: Horiz 1"=20'
Vert 1"=10'

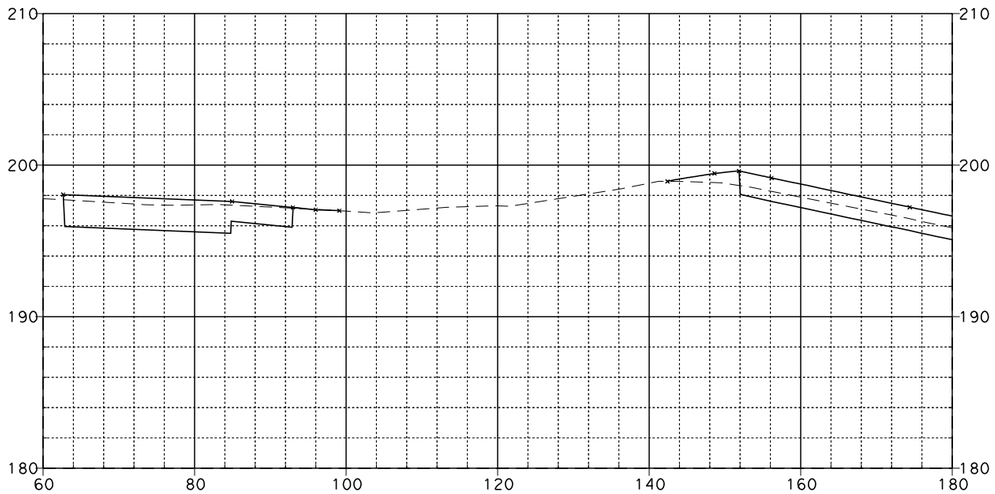

380+00.00

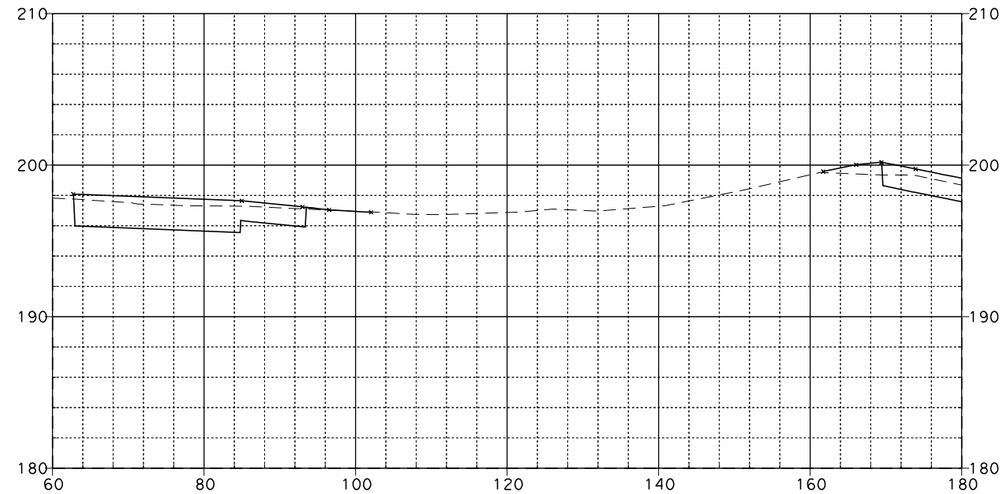

380+39.10

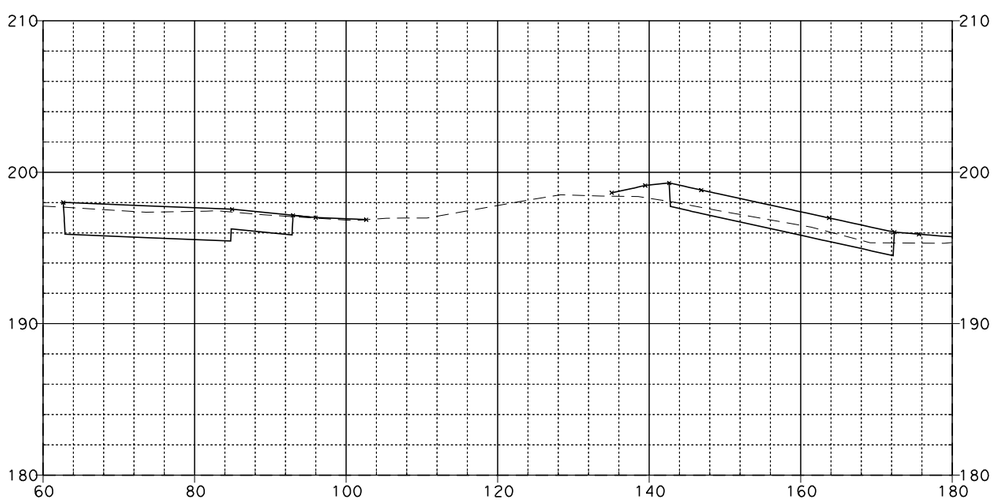

379+75.00

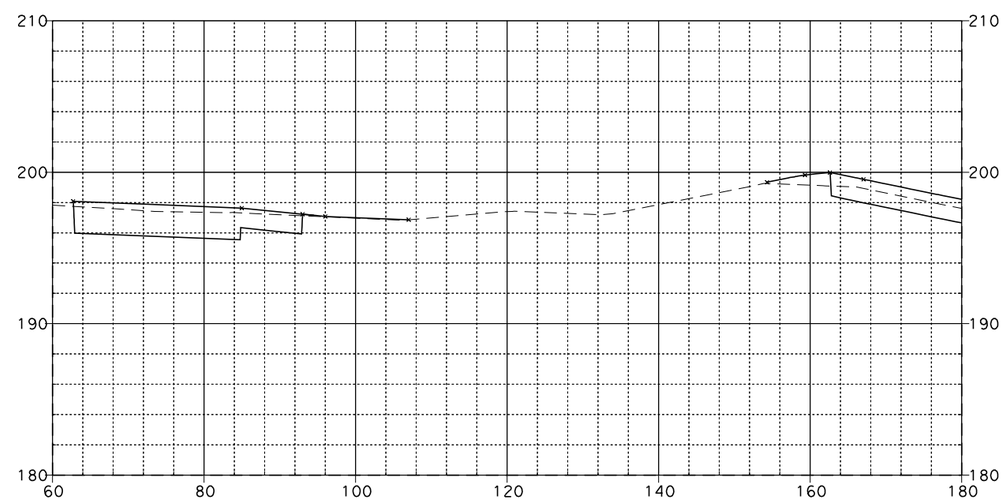

380+25.00

SR-57 MAINLINE

08\03\11

Dist	COUNTY	ROUTE	POST MILES TOTAL PROJECT	SHEET NO.	TOTAL SHEETS
12	Ora	57	12.2/15.2		

FOR EARTHWORK DEVELOPMENT ONLY

...\d0282599\Cross_Sections.dgn

EA 0F0401

SCALE: Horiz 1"=20'
Vert 1"=10'

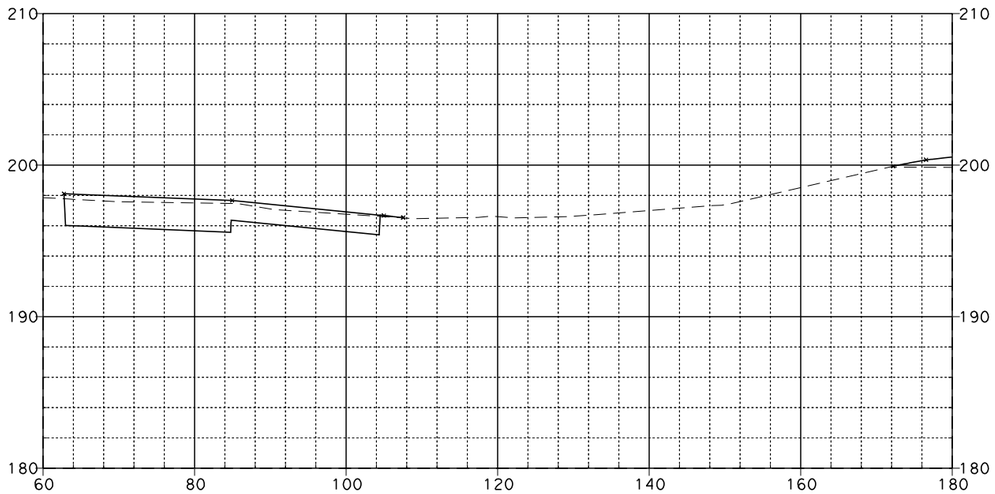

380+59.10

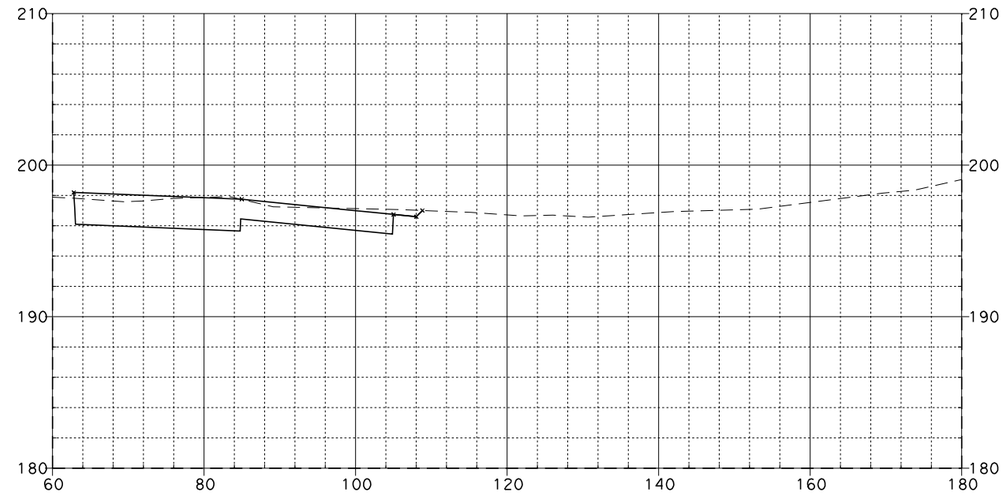

381+00.00

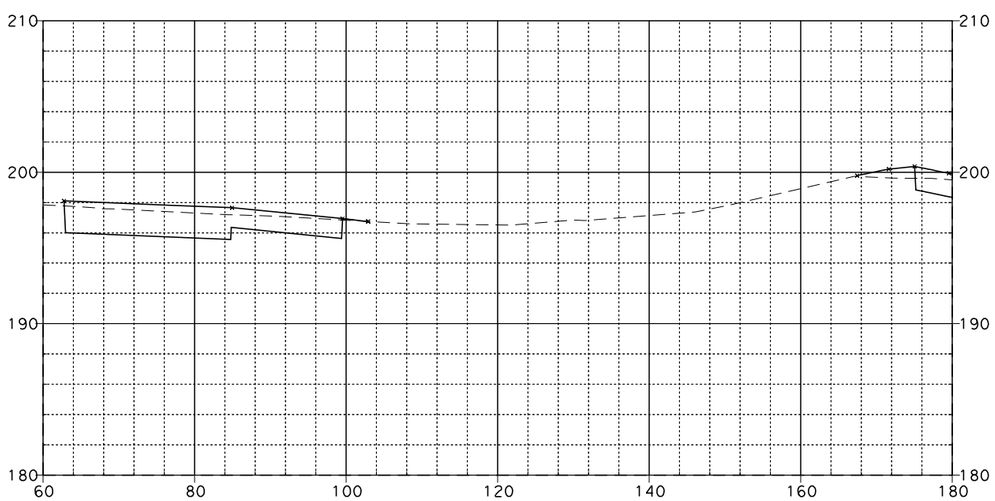

380+50.00

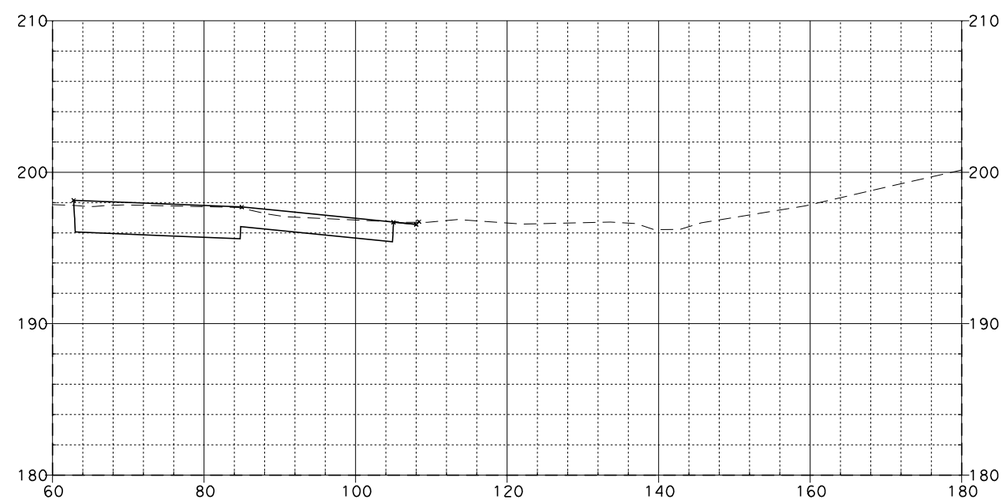

380+75.00

SR-57 MAINLINE

08\03\11

Dist	COUNTY	ROUTE	POST MILES TOTAL PROJECT	SHEET NO.	TOTAL SHEETS
12	Ora	57	12.2/15.2		

FOR EARTHWORK DEVELOPMENT ONLY

...\d0282599\Cross_Sections.dgn

EA 0F0401

SCALE: Horiz 1"=20'
Vert 1"=10'

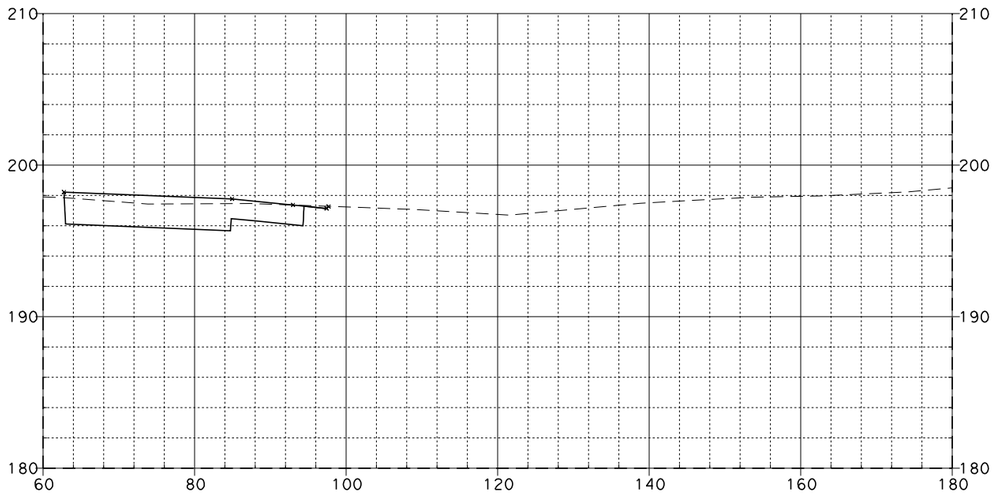

381+24.10

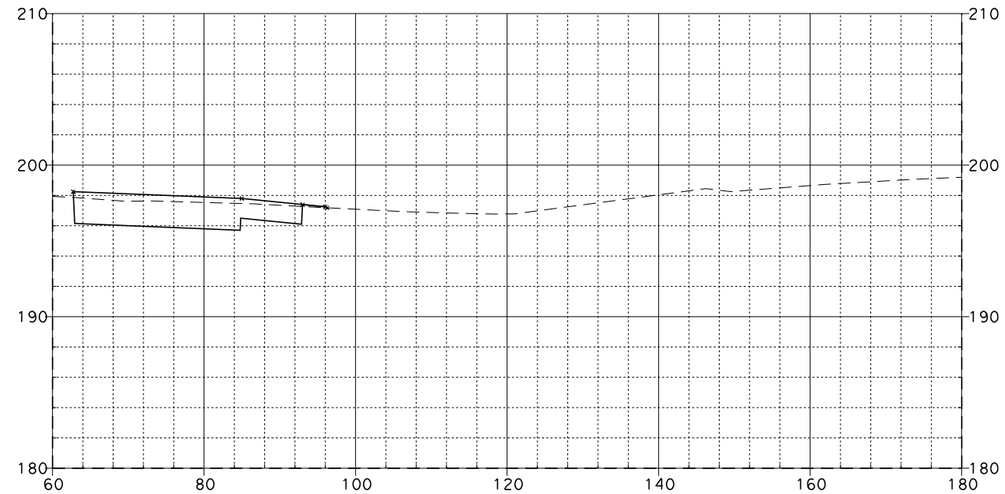

381+50.00

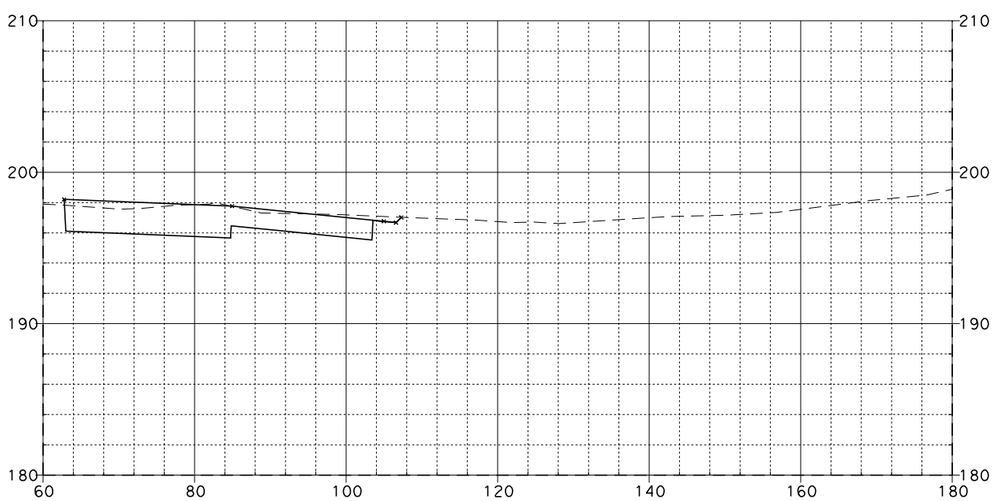

381+04.10

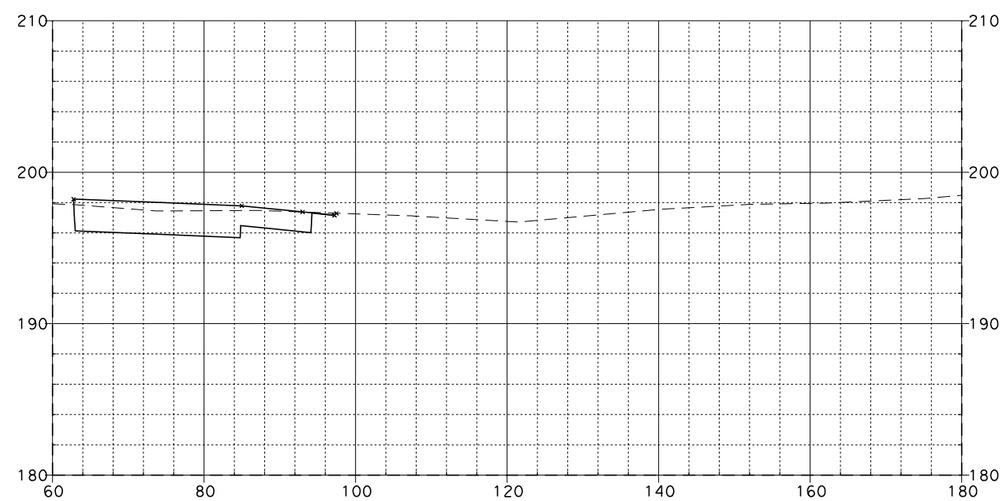

381+25.00

SR-57 MAINLINE

08\03\11

Dist	COUNTY	ROUTE	POST MILES TOTAL PROJECT	SHEET NO.	TOTAL SHEETS
12	Ora	57	12.2/15.2		

FOR EARTHWORK DEVELOPMENT ONLY

...\d0282599\Cross_Sections.dgn

EA 0F0401

SCALE: Horiz 1"=20'
Vert 1"=10'

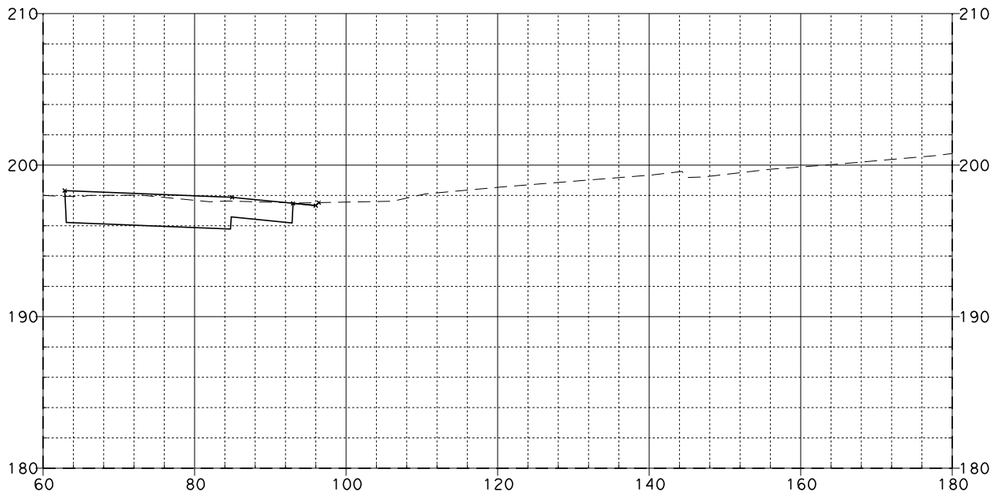

382+00.00

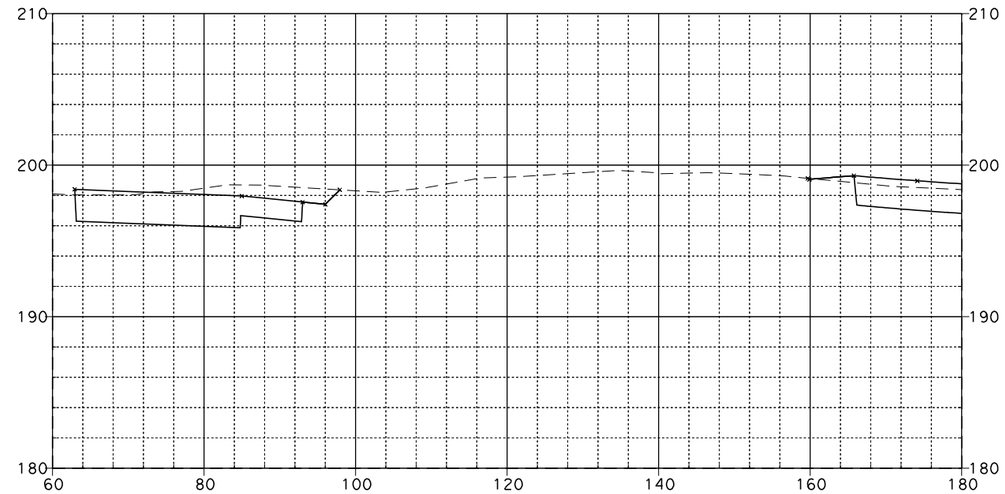

382+37.00

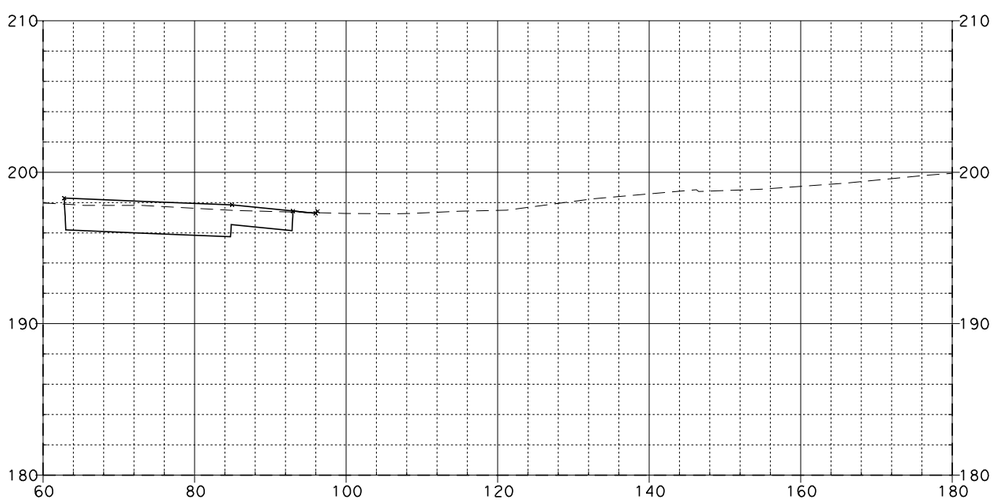

381+75.00

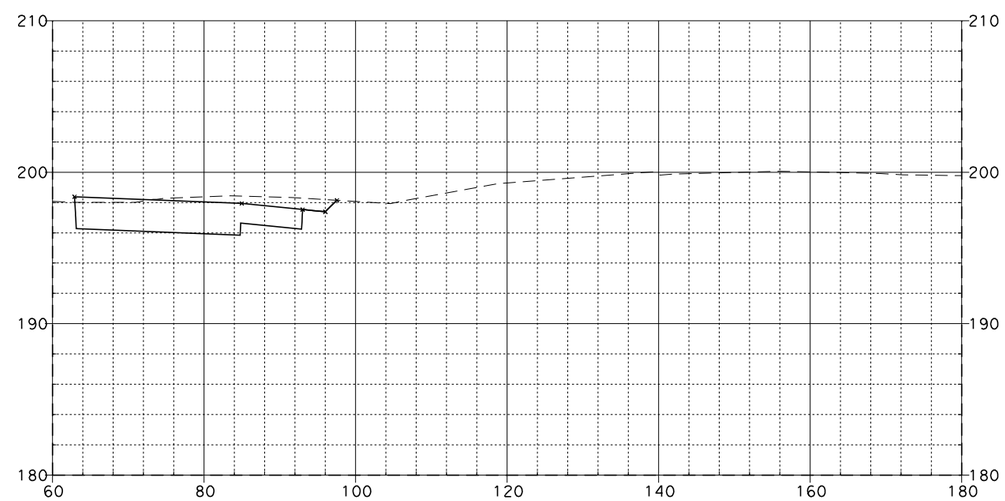

382+25.00

SR-57 MAINLINE

08\03\11

Dist	COUNTY	ROUTE	POST MILES TOTAL PROJECT	SHEET NO.	TOTAL SHEETS
12	Ora	57	12.2/15.2		

FOR EARTHWORK DEVELOPMENT ONLY

...\d0282599\Cross_Sections.dgn

EA 0F0401

SCALE: Horiz 1"=20'
Vert 1"=10'

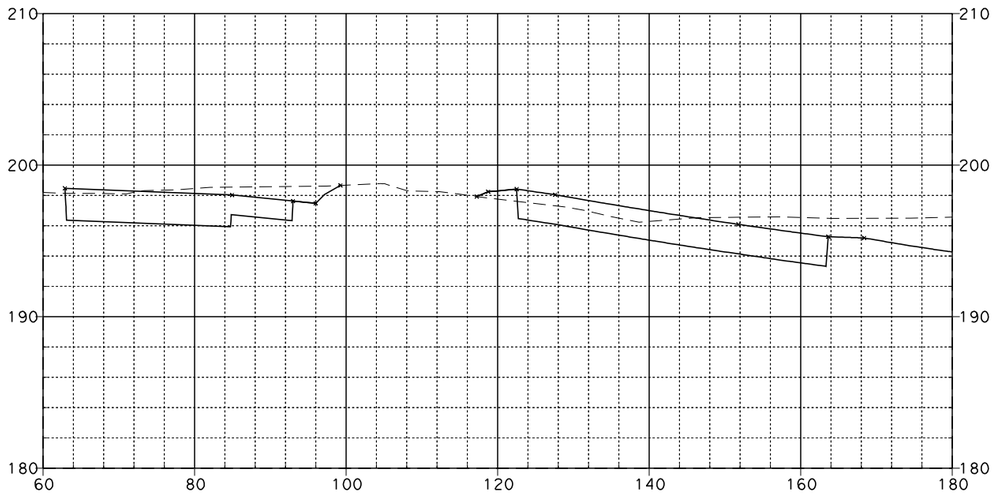

382+75.00

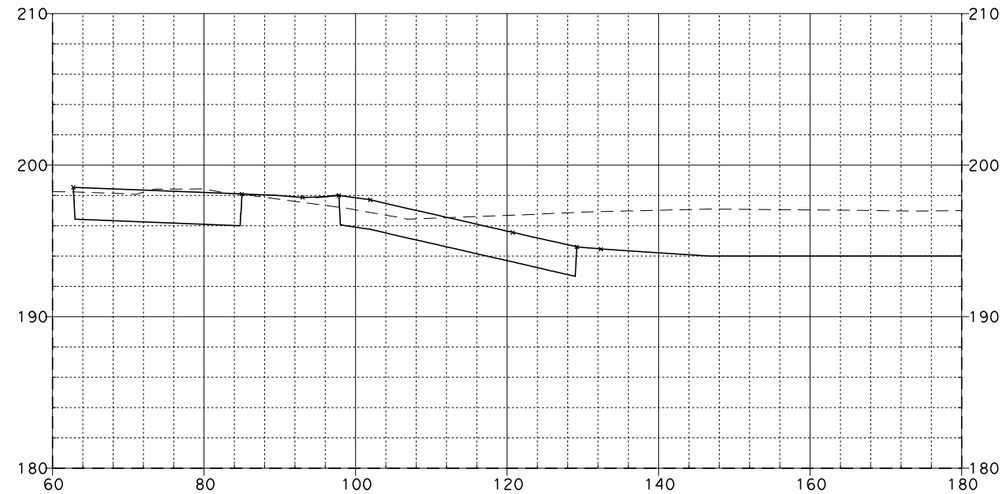

383+25.00

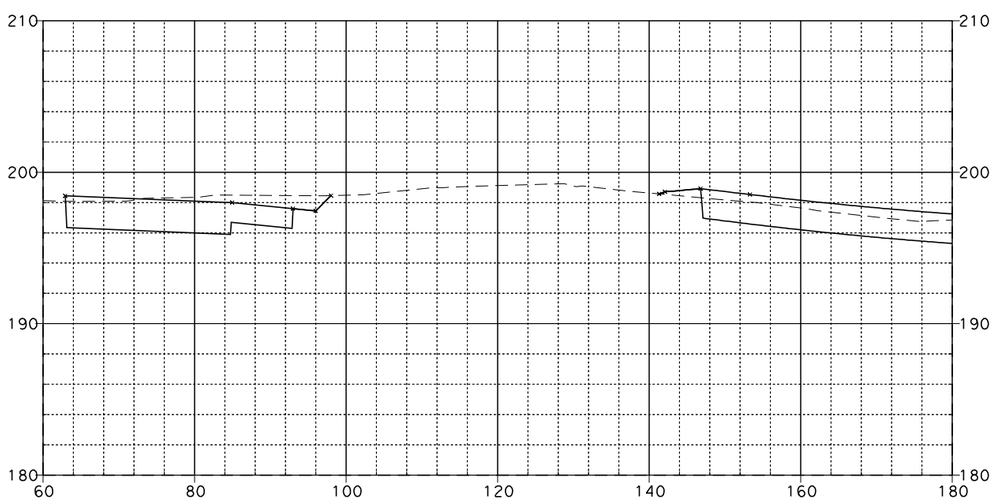

382+50.00

SR-57 MAINLINE

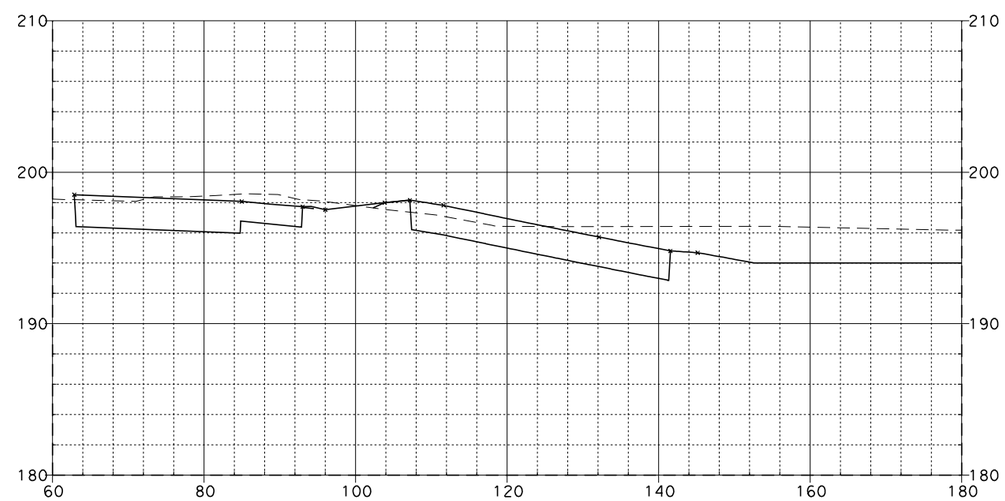

383+00.00

08\03\11

Dist	COUNTY	ROUTE	POST MILES TOTAL PROJECT	SHEET NO.	TOTAL SHEETS
12	Ora	57	12.2/15.2		

FOR EARTHWORK DEVELOPMENT ONLY

...\d0282599\Cross_Sections.dgn

EA 0F0401

SCALE: Horiz 1"=20'
Vert 1"=10'

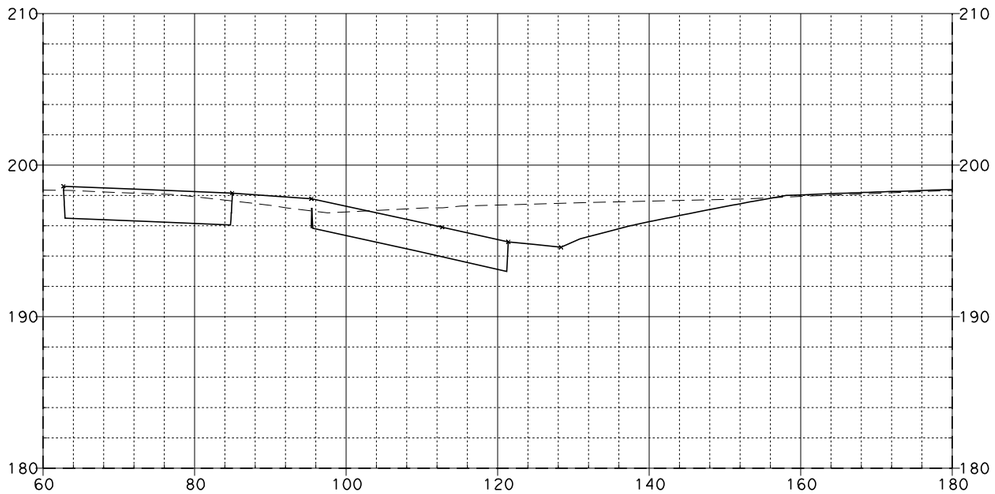

383+75.00

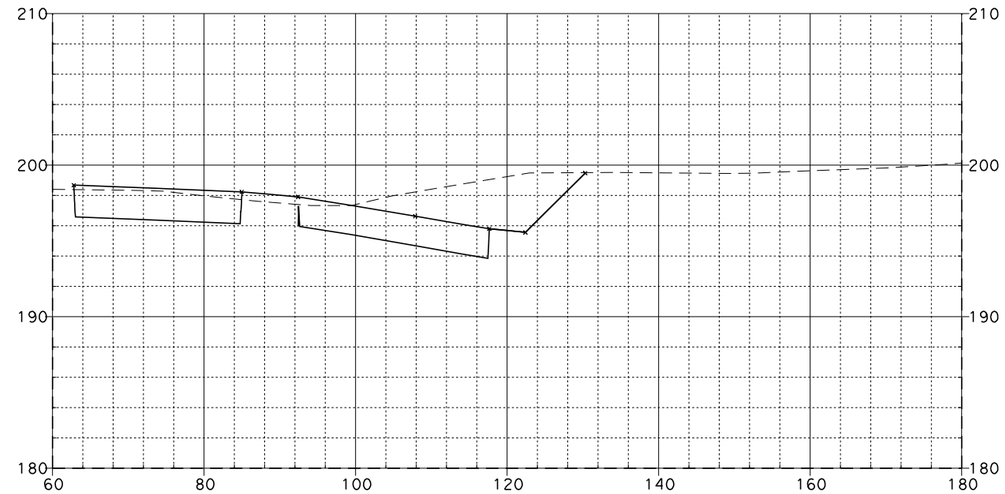

384+25.00

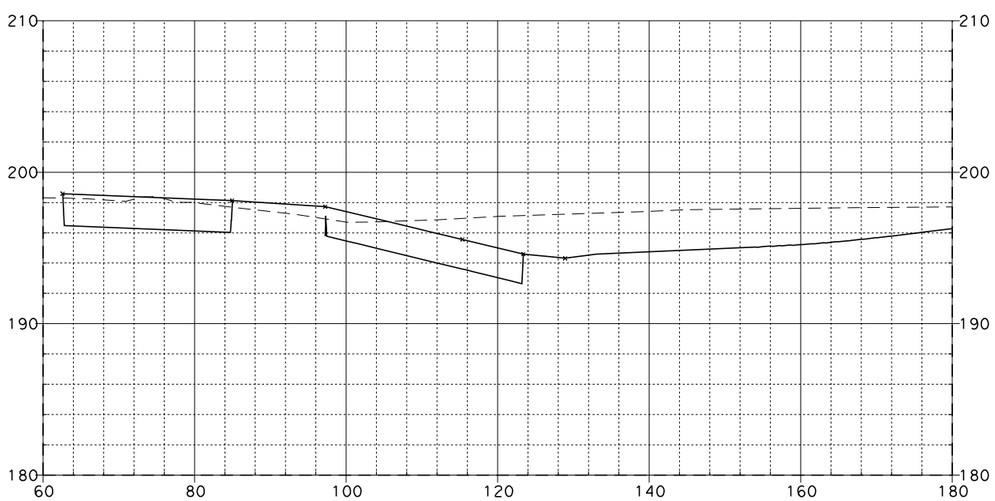

383+50.00

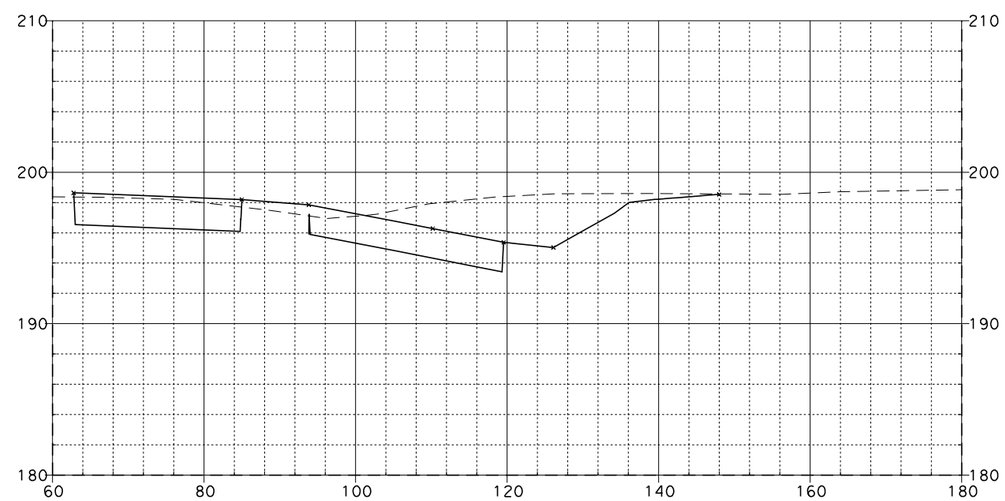

384+00.00

SR-57 MAINLINE

08\03\11

Dist	COUNTY	ROUTE	POST MILES TOTAL PROJECT	SHEET NO.	TOTAL SHEETS
12	Ora	57	12.2/15.2		

FOR EARTHWORK DEVELOPMENT ONLY

...\d0282599\Cross_Sections.dgn

EA 0F0401

SCALE: Horiz 1"=20'
Vert 1"=10'

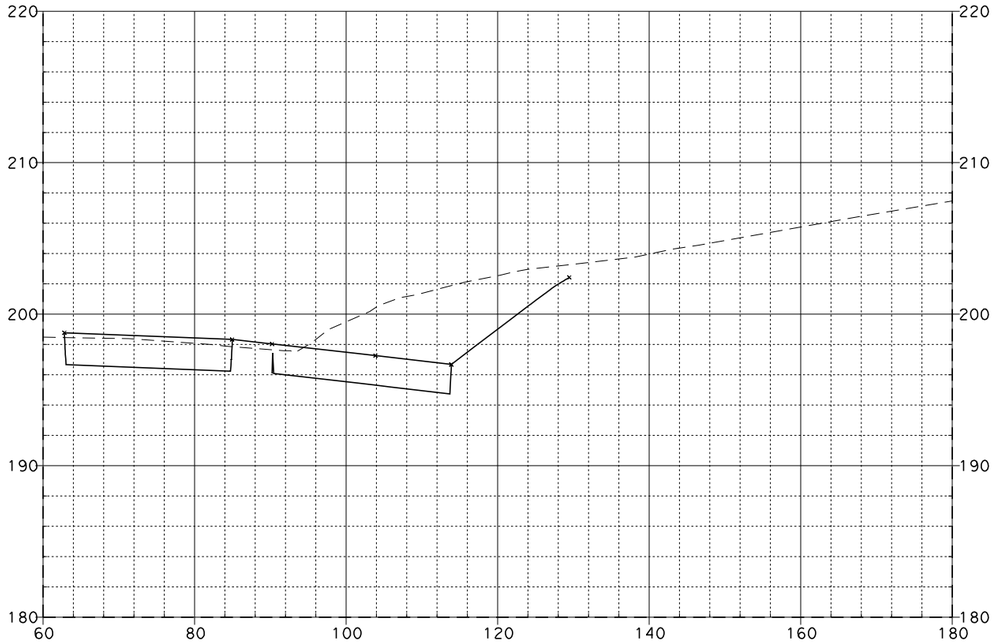

384+75.00

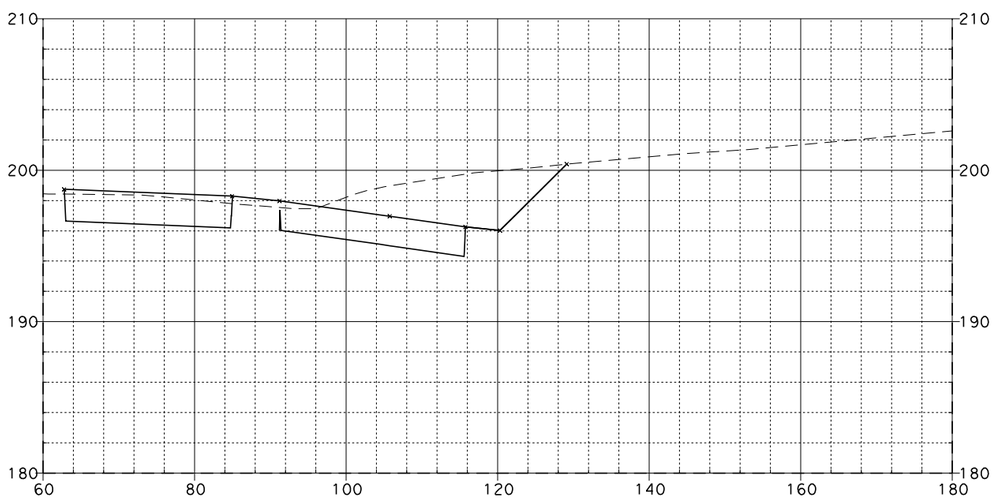

384+50.00

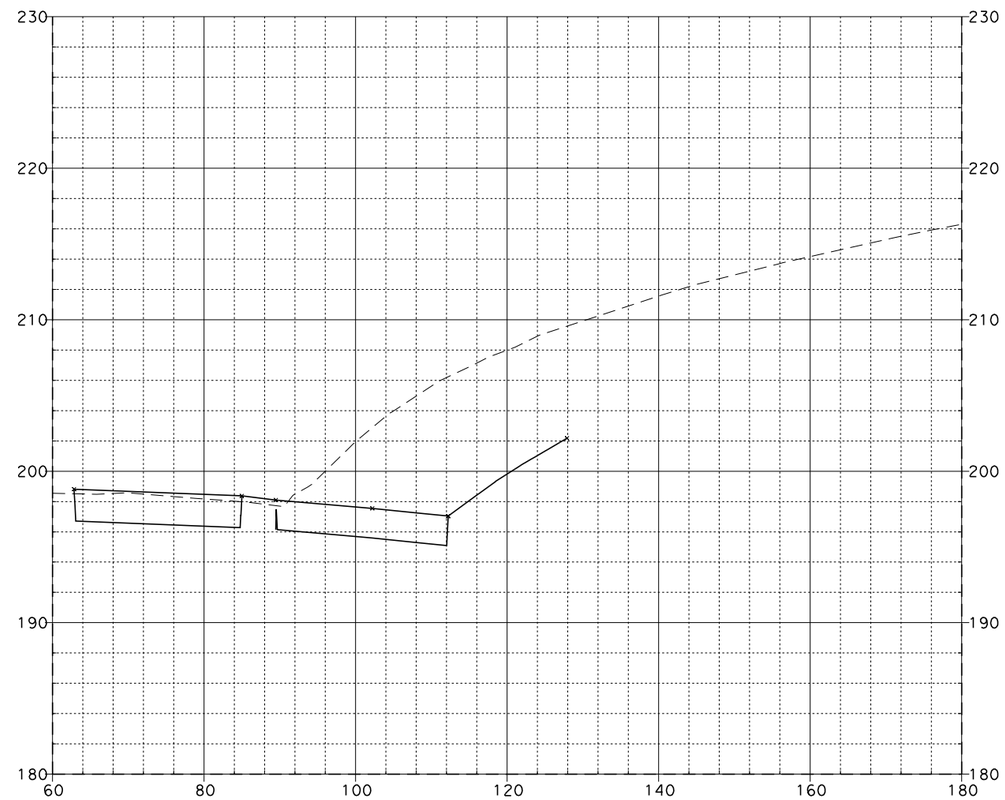

385+00.00

SR-57 MAINLINE

08\03\11

Dist	COUNTY	ROUTE	POST MILES TOTAL PROJECT	SHEET NO.	TOTAL SHEETS
12	Ora	57	12.2/15.2		

FOR EARTHWORK DEVELOPMENT ONLY

...\d0282599\Cross_Sections.dgn

EA 0F0401

SCALE: Horiz 1"=20'
Vert 1"=10'

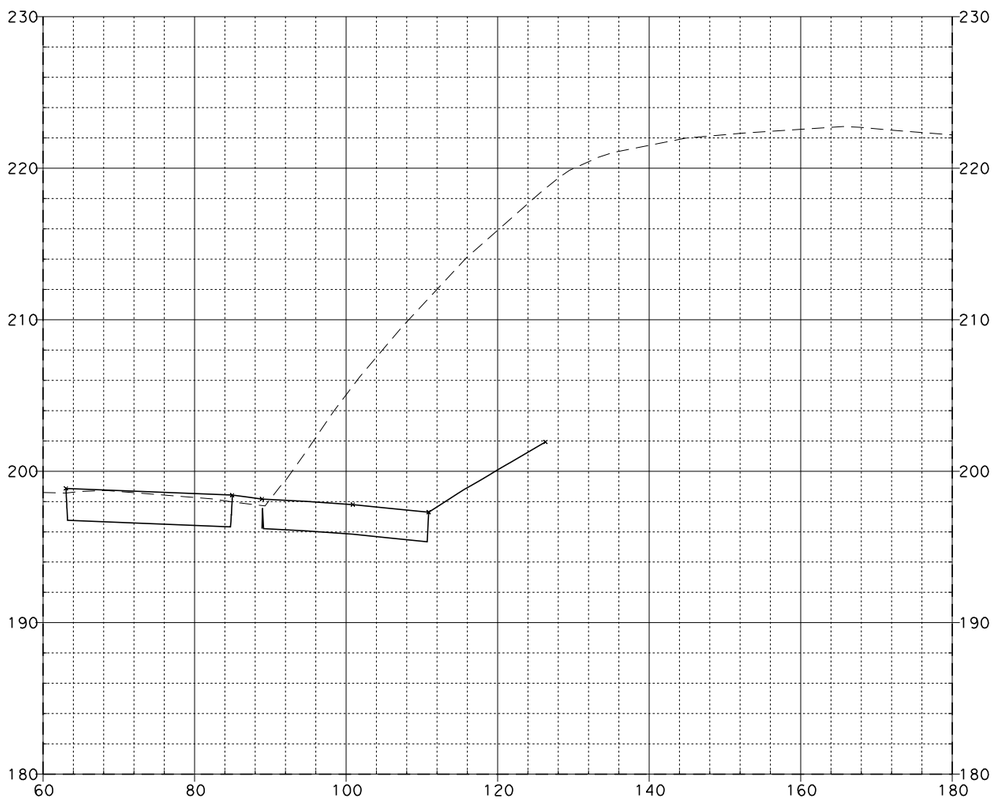

385+25.00

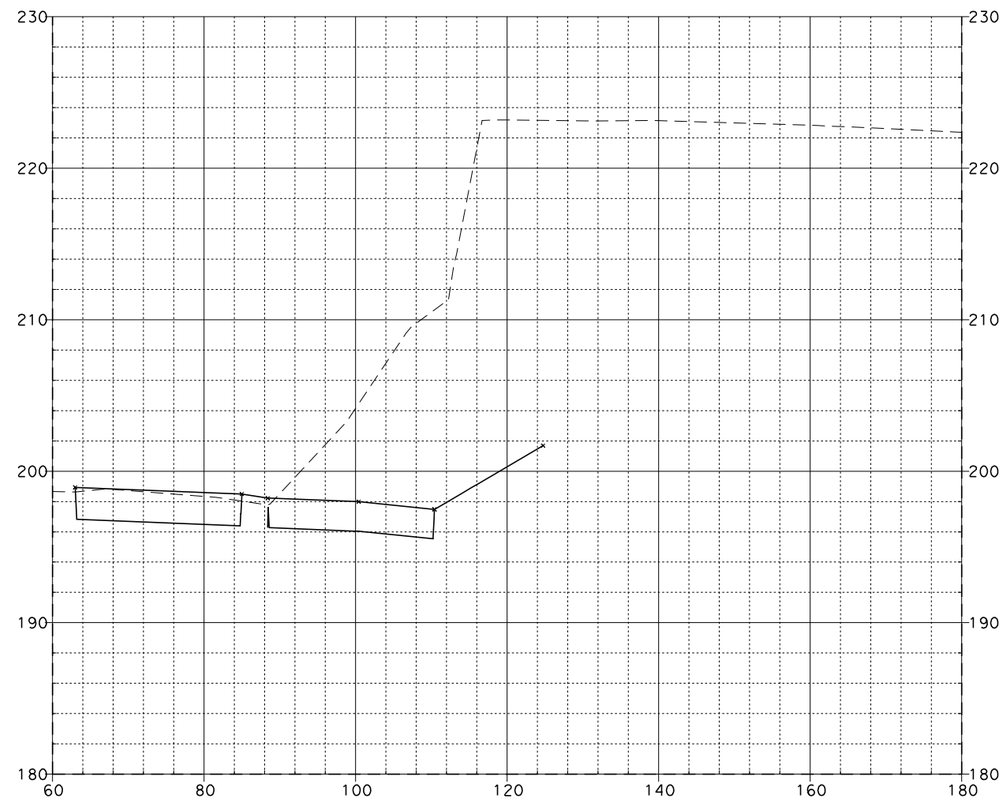

385+50.00

SR-57 MAINLINE

08\03\11

Dist	COUNTY	ROUTE	POST MILES TOTAL PROJECT	SHEET No.	TOTAL SHEETS
12	Ora	57	12.2/15.2		

FOR EARTHWORK DEVELOPMENT ONLY

...\d0282599\Cross_Sections.dgn

EA 0F0401

SCALE: Horiz 1"=20'
Vert 1"=10'

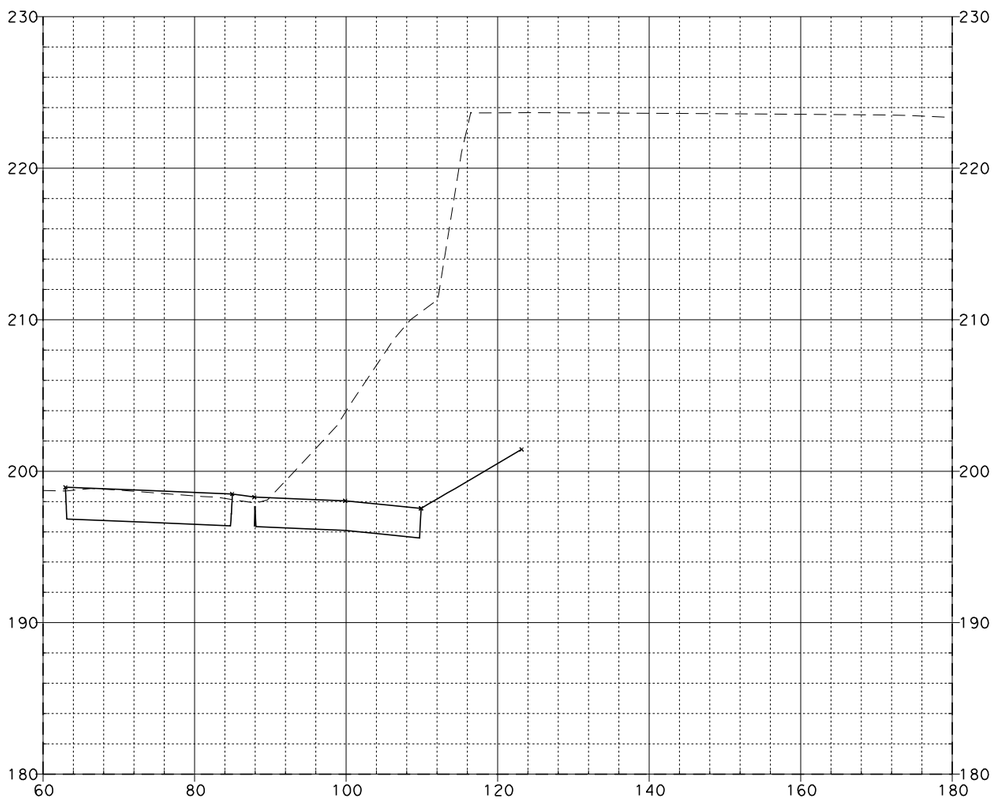

385+75.00

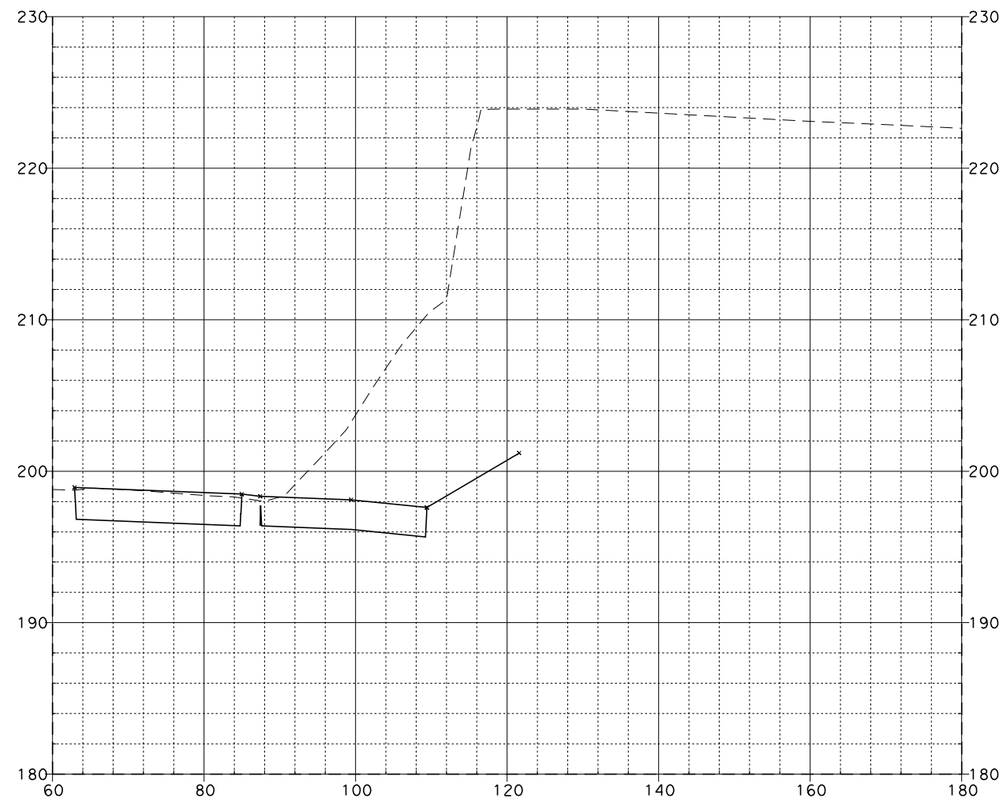

386+00.00

SR-57 MAINLINE

08\03\11

Dist	COUNTY	ROUTE	POST MILES TOTAL PROJECT	SHEET NO.	TOTAL SHEETS
12	Ora	57	12.2/15.2		

FOR EARTHWORK DEVELOPMENT ONLY

...\d0282599\Cross_Sections.dgn

EA 0F0401

SCALE: Horiz 1"=20'
Vert 1"=10'

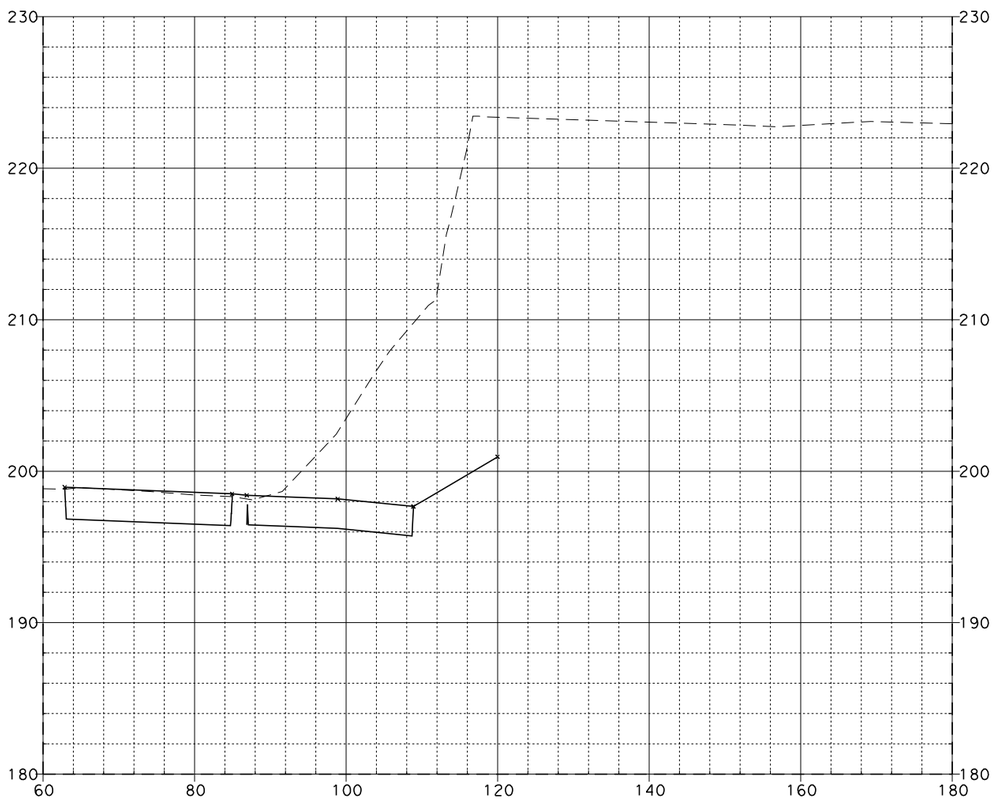

386+25.00

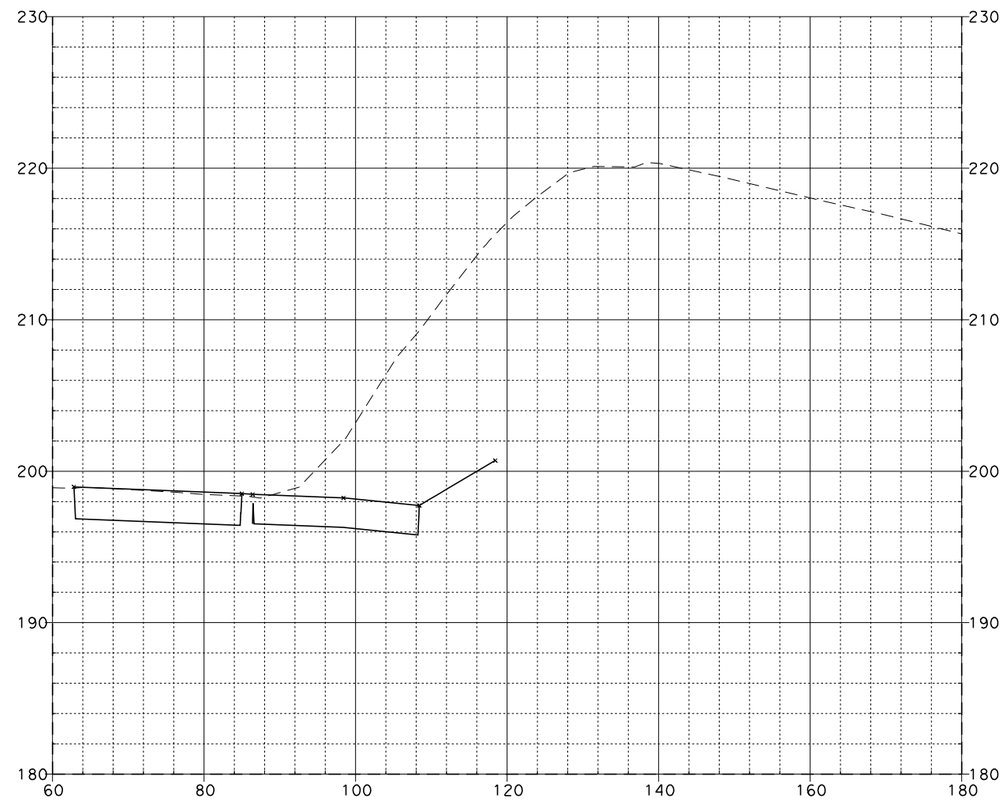

386+50.00

SR-57 MAINLINE

08\03\11

Dist	COUNTY	ROUTE	POST MILES TOTAL PROJECT	SHEET No.	TOTAL SHEETS
12	Ora	57	12.2/15.2		

FOR EARTHWORK DEVELOPMENT ONLY

...\d0282599\Cross_Sections.dgn

EA 0F0401

SCALE: Horiz 1"=20'
Vert 1"=10'

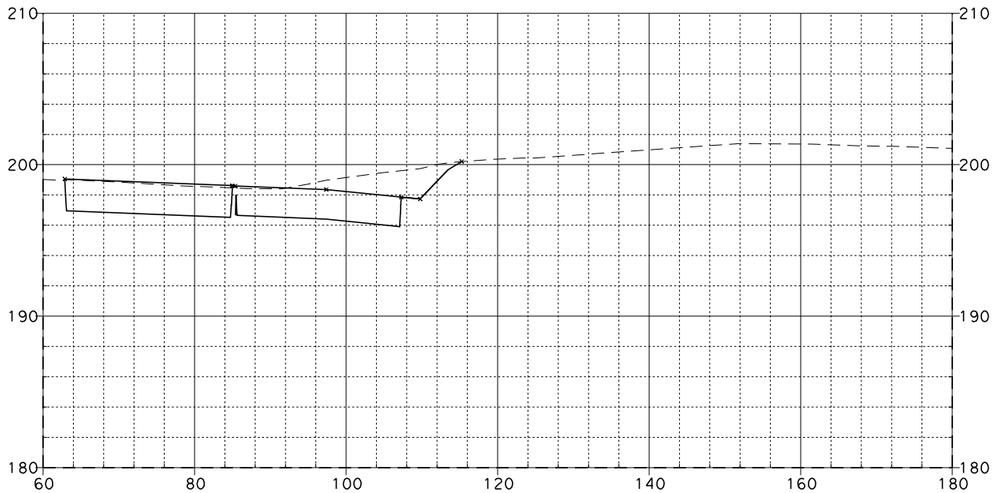

387+00.00

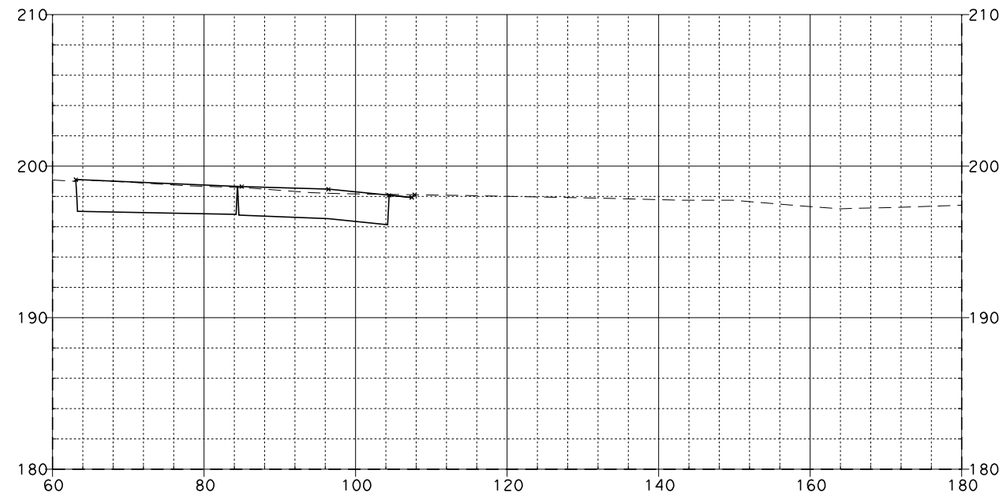

387+50.00

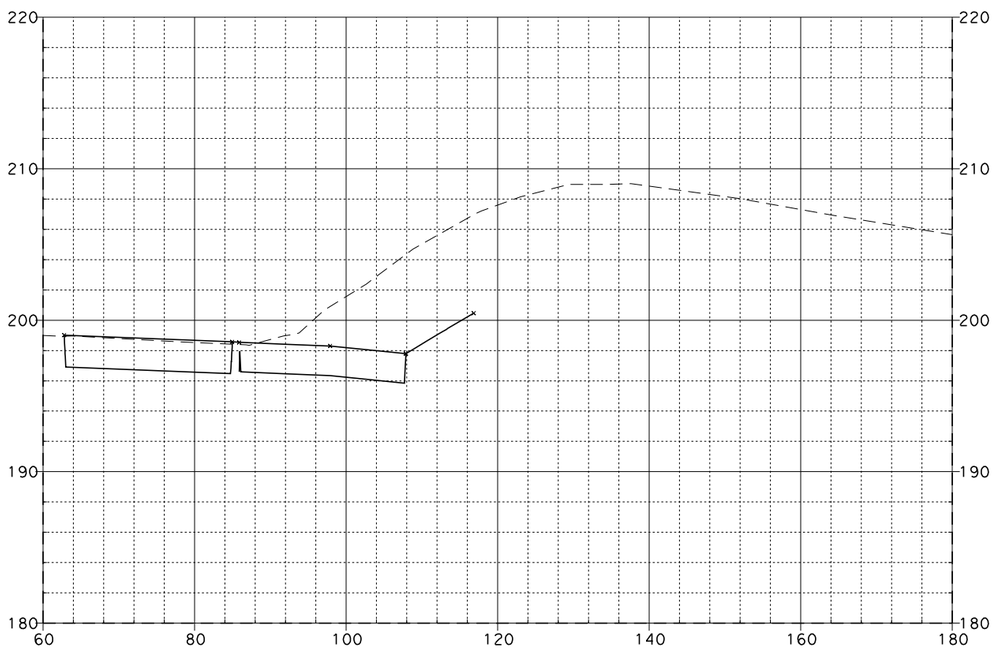

386+75.00

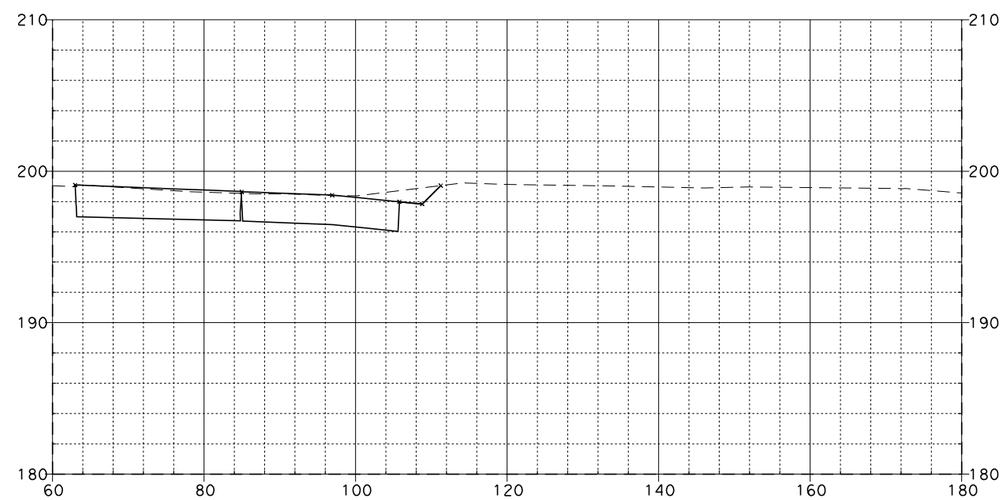

387+25.00

SR-57 MAINLINE

08\03\11

Dist	COUNTY	ROUTE	POST MILES TOTAL PROJECT	SHEET No.	TOTAL SHEETS
12	Ora	57	12.2/15.2		

FOR EARTHWORK DEVELOPMENT ONLY

...\d0282599\Cross_Sections.dgn

EA 0F0401

SCALE: Horiz 1"=20'
Vert 1"=10'

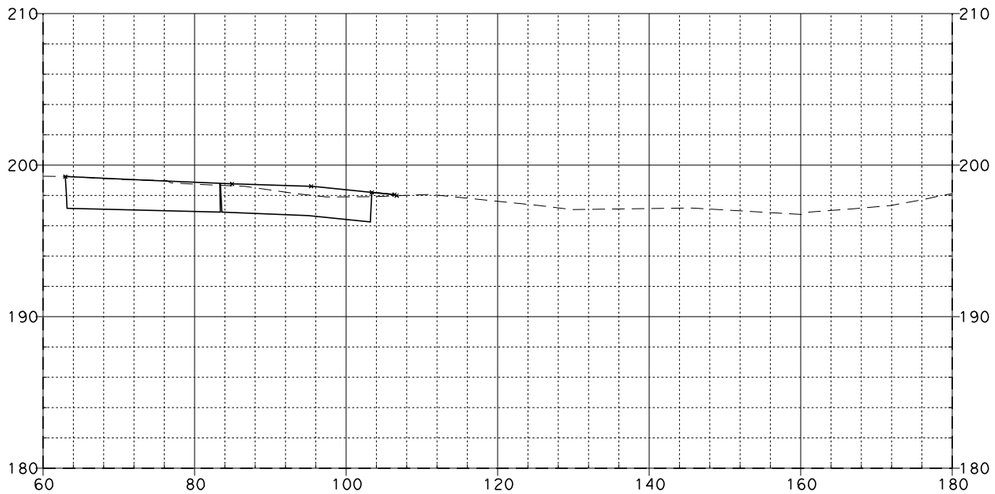

388+00.00

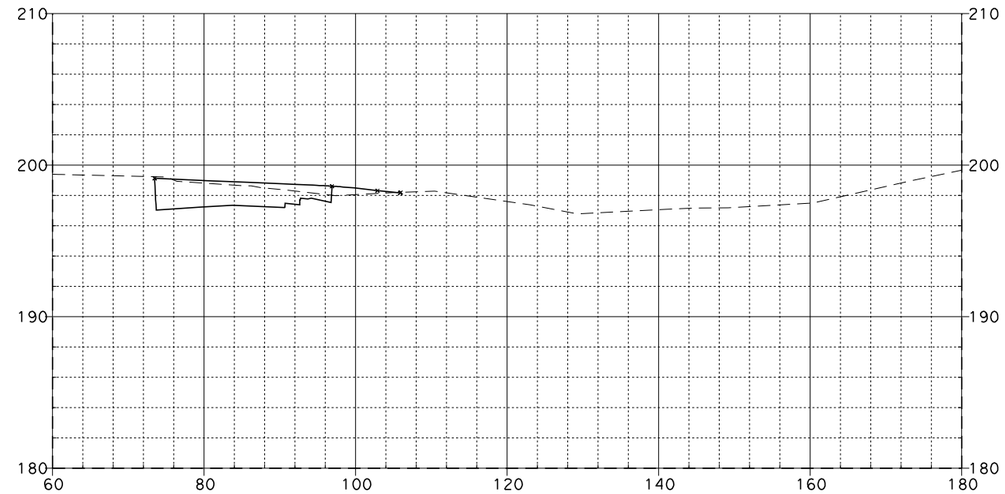

388+25.00

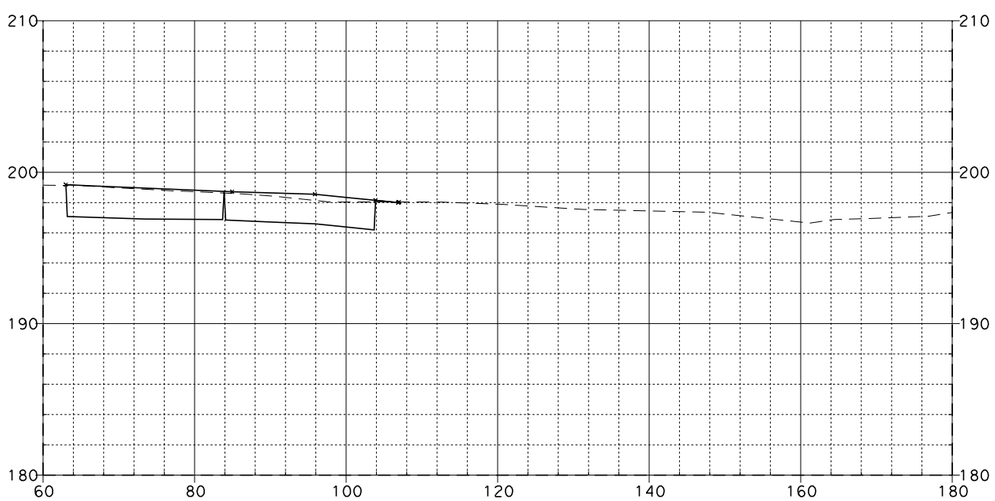

387+75.00

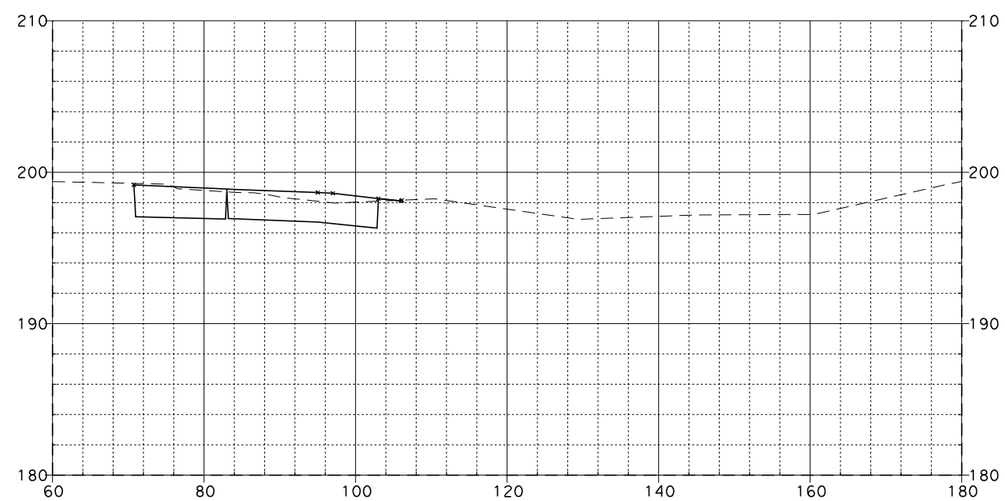

388+20.00

SR-57 MAINLINE

08\03\11

Dist	COUNTY	ROUTE	POST MILES TOTAL PROJECT	SHEET NO.	TOTAL SHEETS
12	Ora	57	12.2/15.2		

FOR EARTHWORK DEVELOPMENT ONLY

...\d0282599\Cross_Sections.dgn

EA 0F0401

SCALE: Horiz 1"=20'
Vert 1"=10'

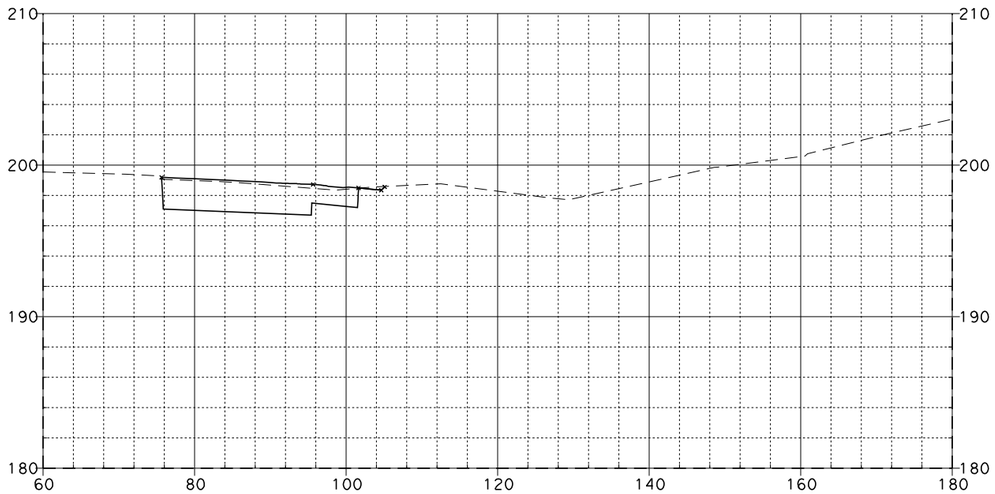

388+75.00

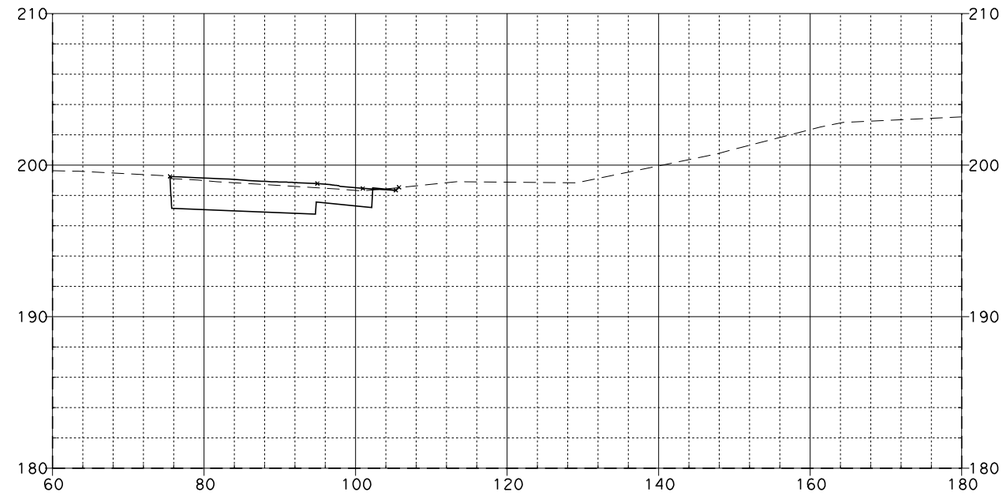

389+03.45

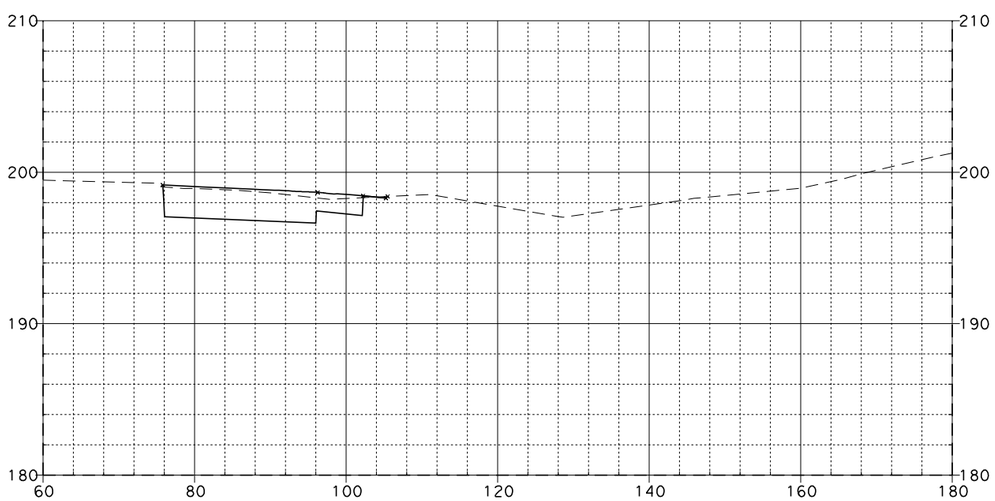

388+50.00

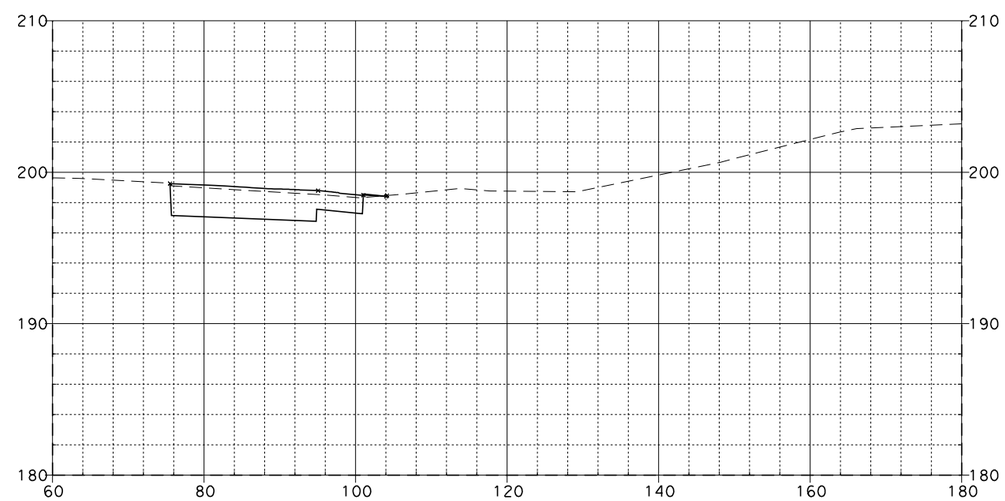

389+00.00

SR-57 MAINLINE

08\03\11

Dist	COUNTY	ROUTE	POST MILES TOTAL PROJECT	SHEET NO.	TOTAL SHEETS
12	Ora	57	12.2/15.2		

FOR EARTHWORK DEVELOPMENT ONLY

...\d0282599\Cross_Sections.dgn

EA 0F0401

SCALE: Horiz 1"=20'
Vert 1"=10'

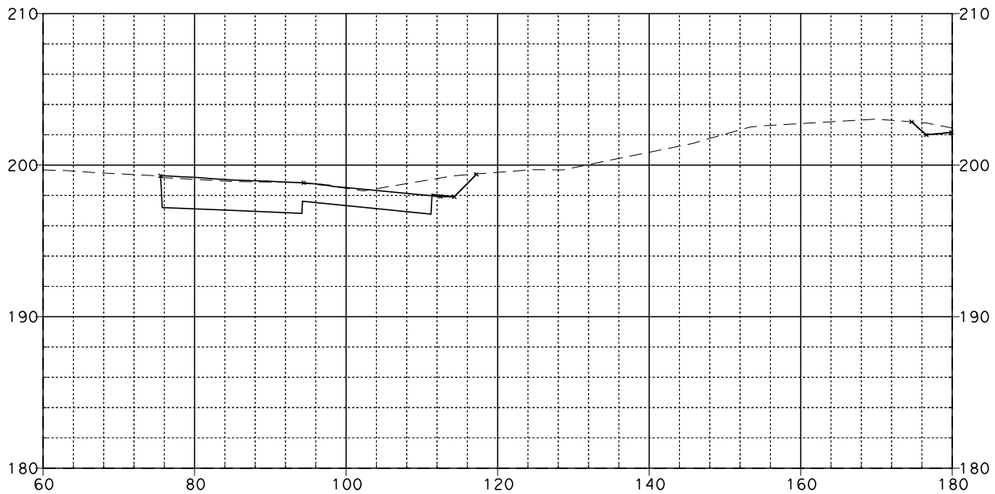

389+25.00

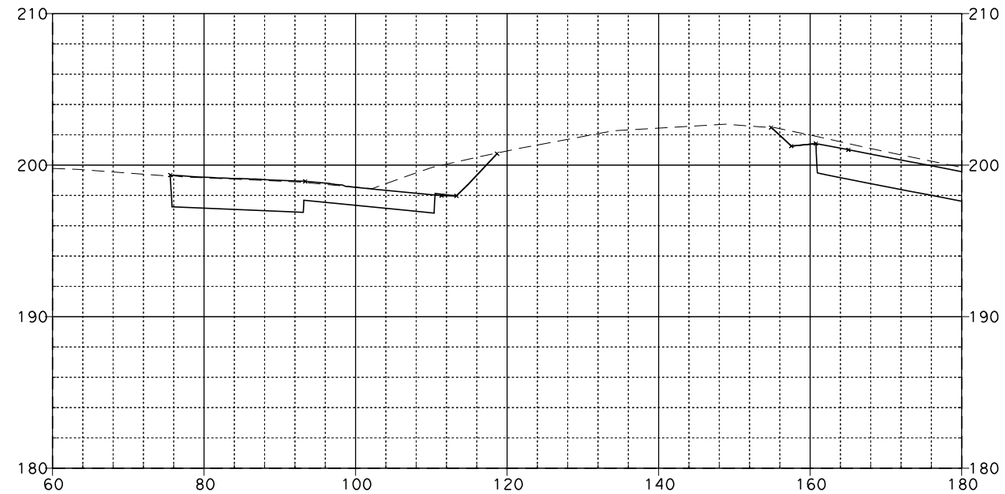

389+68.73

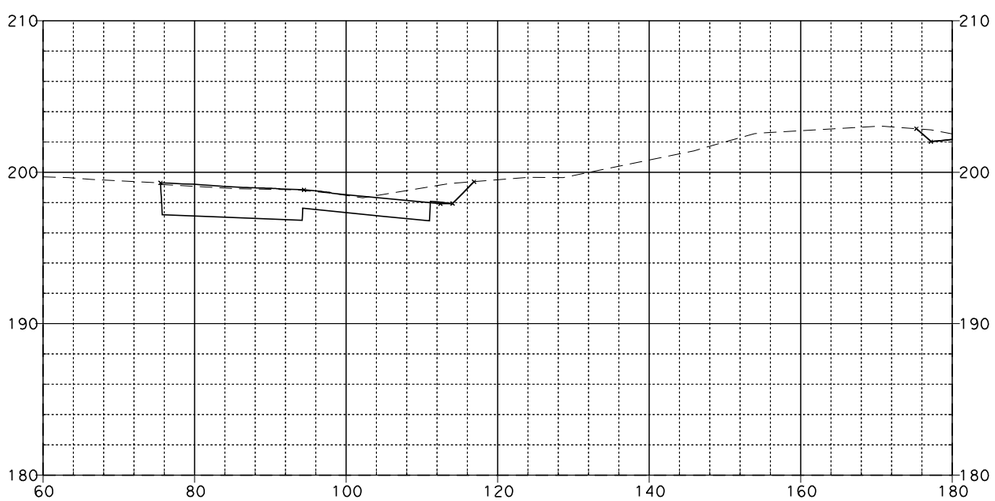

389+23.74

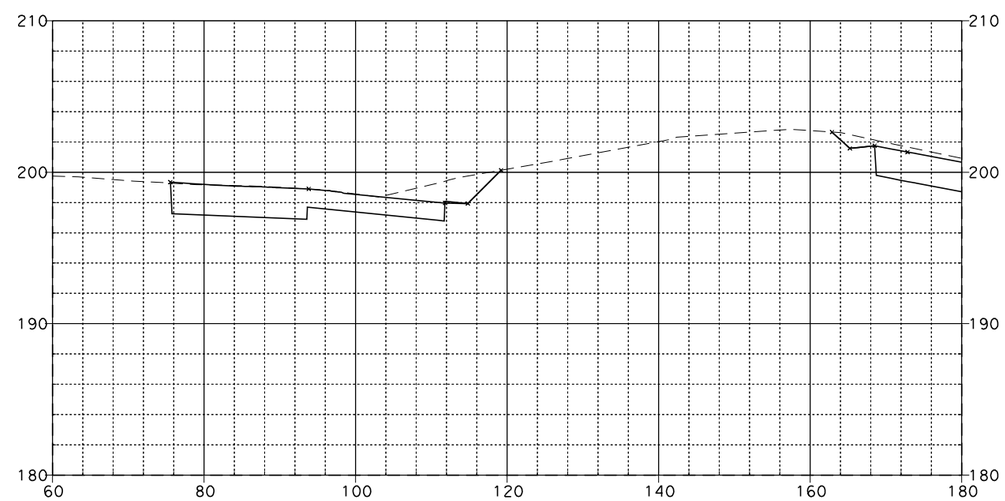

389+50.00

SR-57 MAINLINE

08\03\11

Dist	COUNTY	ROUTE	POST MILES TOTAL PROJECT	SHEET NO.	TOTAL SHEETS
12	Ora	57	12.2/15.2		

FOR EARTHWORK DEVELOPMENT ONLY

...\d0282599\Cross_Sections.dgn

EA 0F0401

SCALE: Horiz 1"=20'
Vert 1"=10'

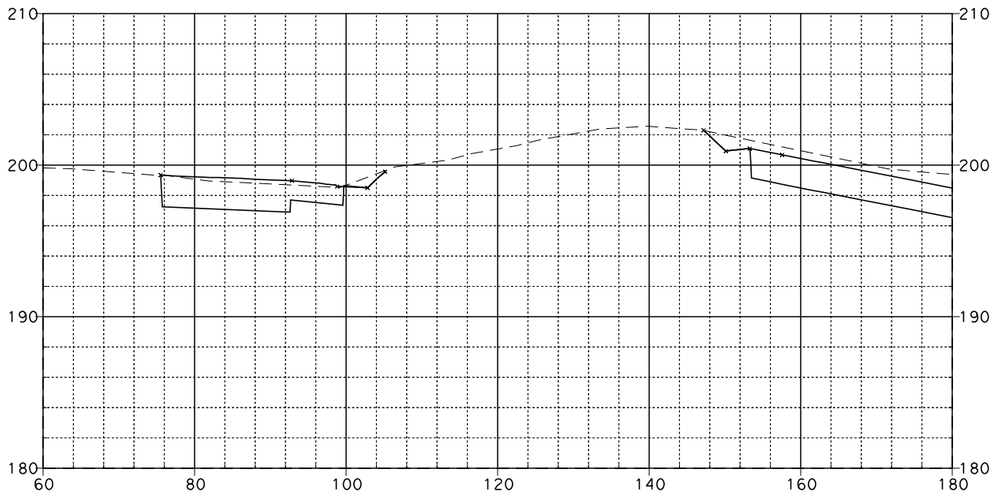

389+88.43

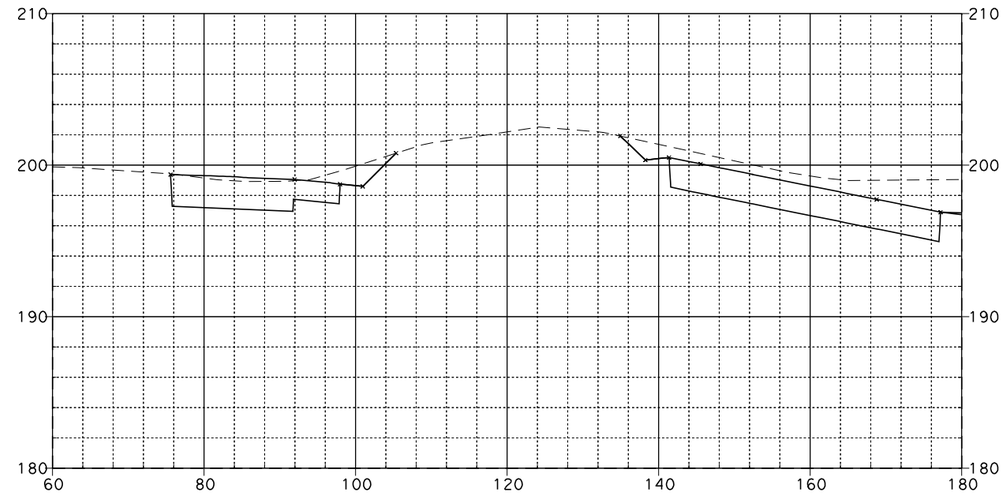

390+25.00

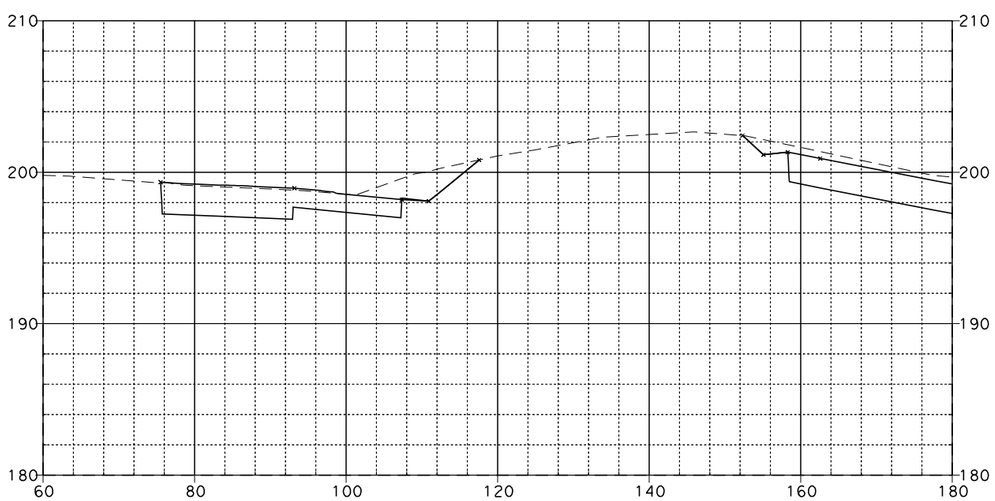

389+75.00

SR-57 MAINLINE

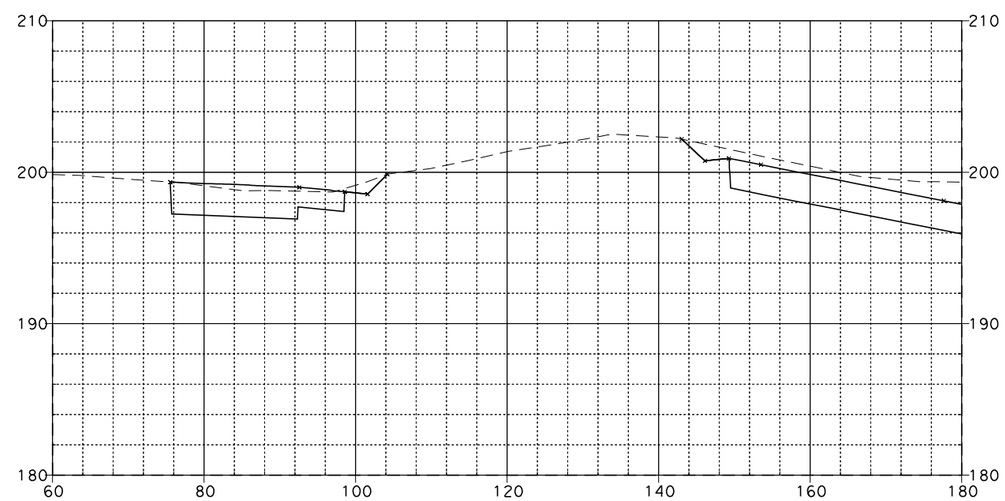

390+00.00

08\03\11

Dist	COUNTY	ROUTE	POST MILES TOTAL PROJECT	SHEET NO.	TOTAL SHEETS
12	Ora	57	12.2/15.2		

FOR EARTHWORK DEVELOPMENT ONLY

...\d0282599\Cross_Sections.dgn

EA 0F0401

SCALE: Horiz 1"=20'
Vert 1"=10'

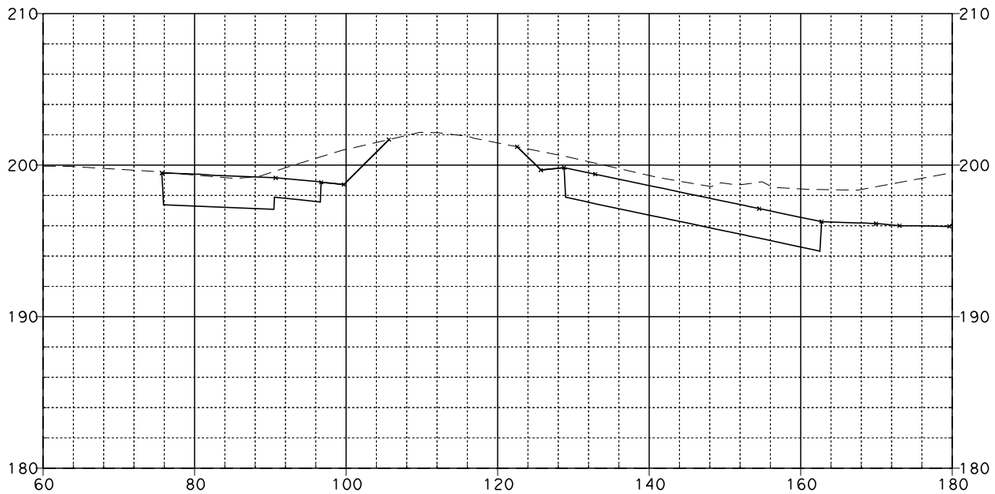

390+75.00

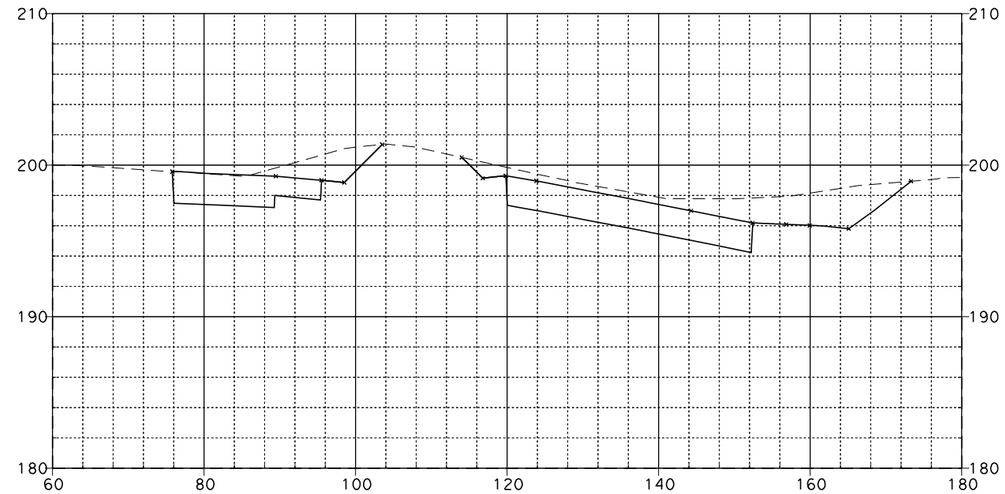

391+25.00

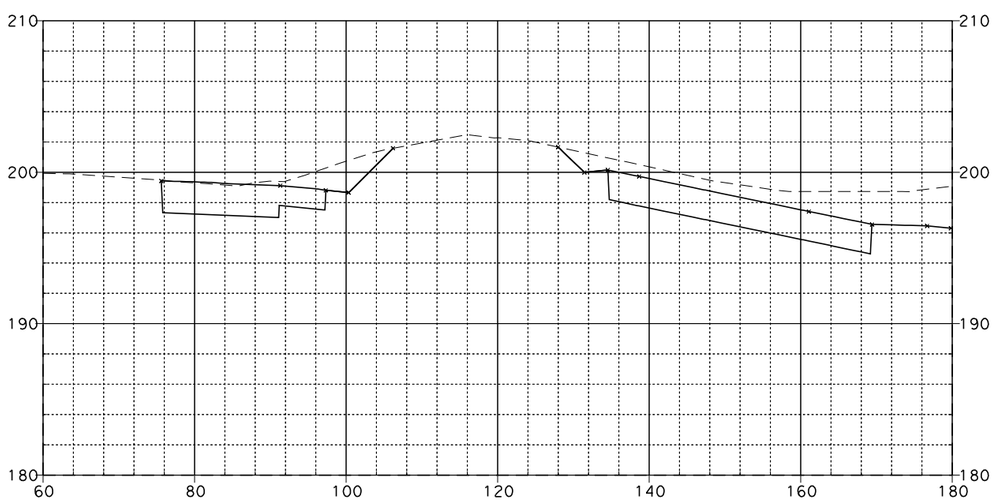

390+50.00

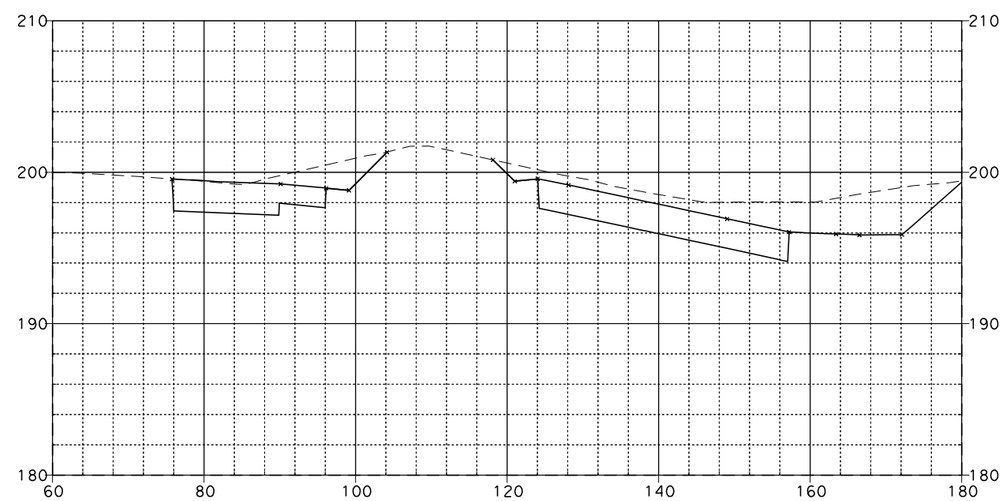

391+00.00

SR-57 MAINLINE

08\03\11

Dist	COUNTY	ROUTE	POST MILES TOTAL PROJECT	SHEET NO.	TOTAL SHEETS
12	Ora	57	12.2/15.2		

FOR EARTHWORK DEVELOPMENT ONLY

...\d0282599\Cross_Sections.dgn

EA 0F0401

SCALE: Horiz 1"=20'
Vert 1"=10'

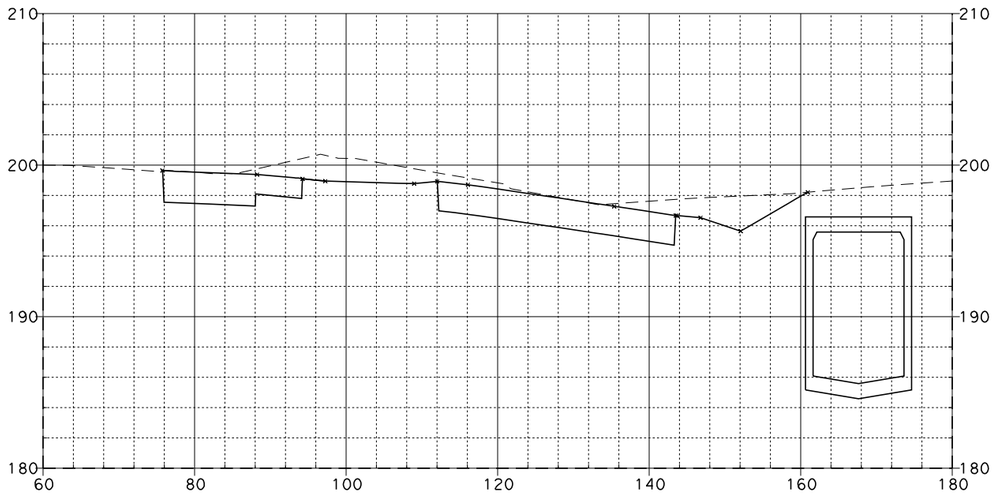

391+75.00

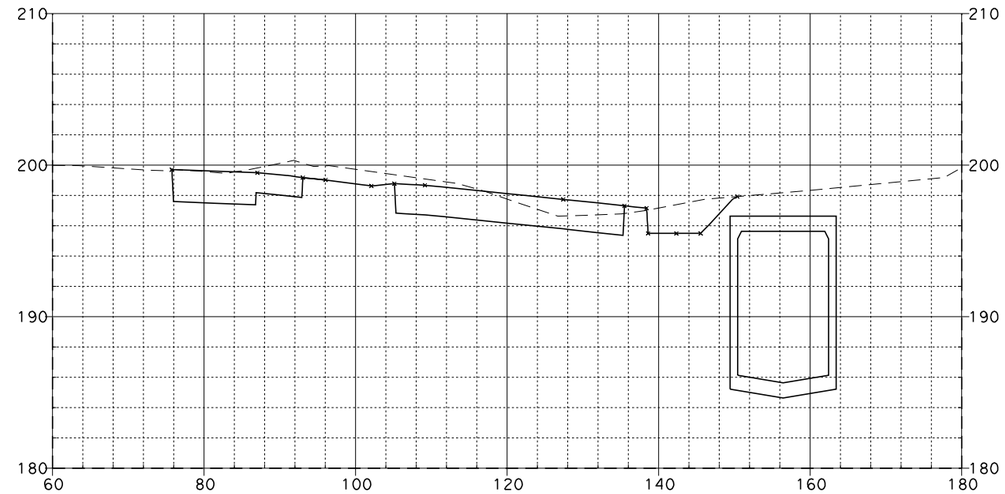

392+25.00

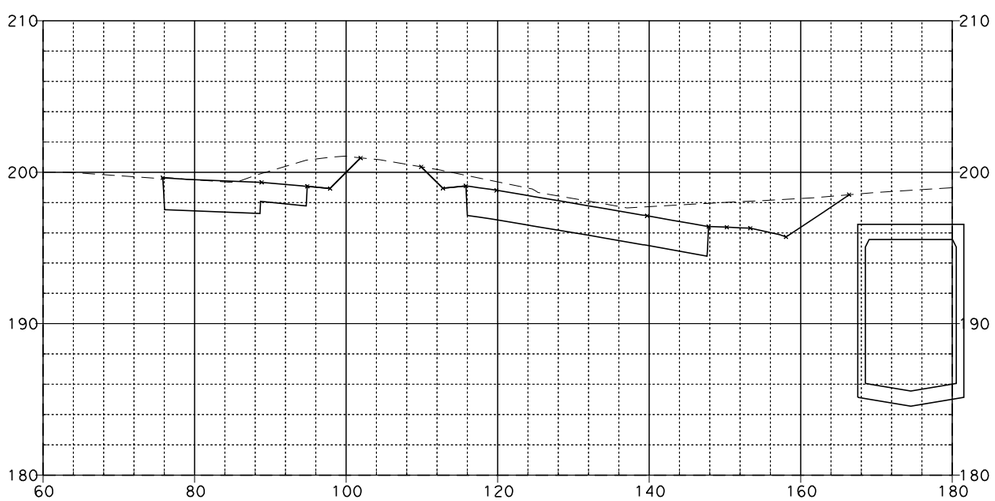

391+50.00

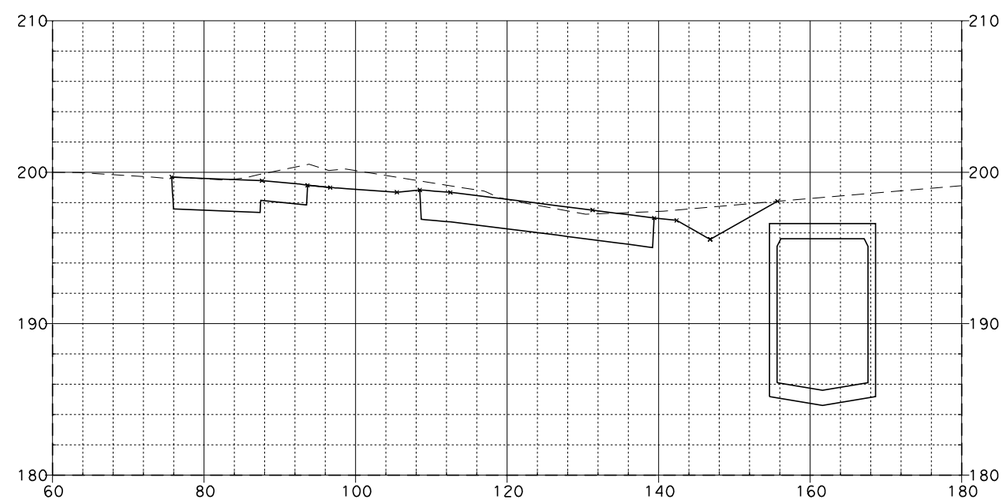

392+00.00

SR-57 MAINLINE

08\03\11

Dist	COUNTY	ROUTE	POST MILES TOTAL PROJECT	SHEET NO.	TOTAL SHEETS
12	Ora	57	12.2/15.2		

FOR EARTHWORK DEVELOPMENT ONLY

...\d0282599\Cross_Sections.dgn

EA 0F0401

SCALE: Horiz 1"=20'
Vert 1"=10'

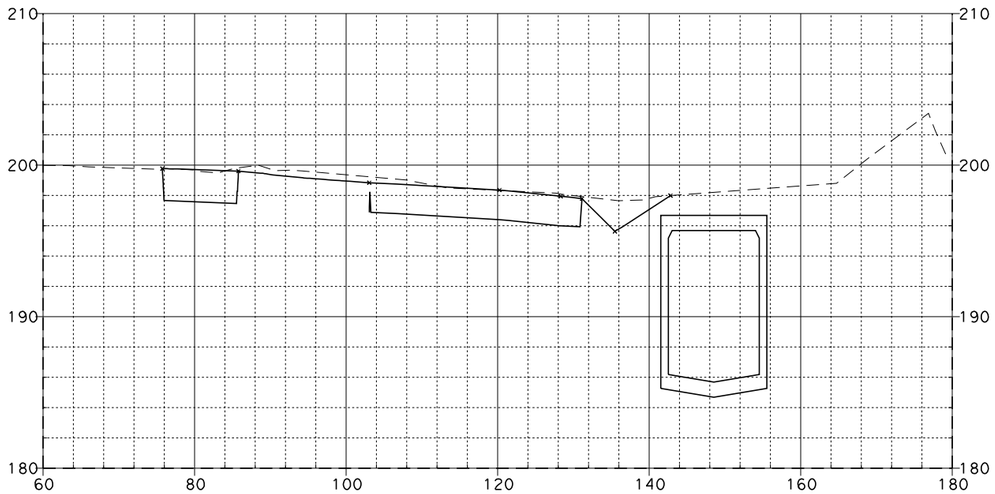

392+75.00

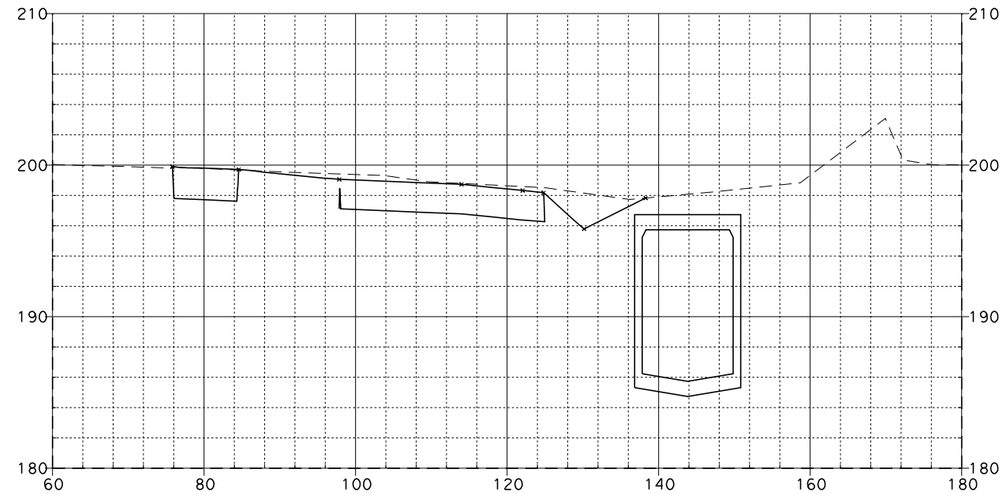

393+25.00

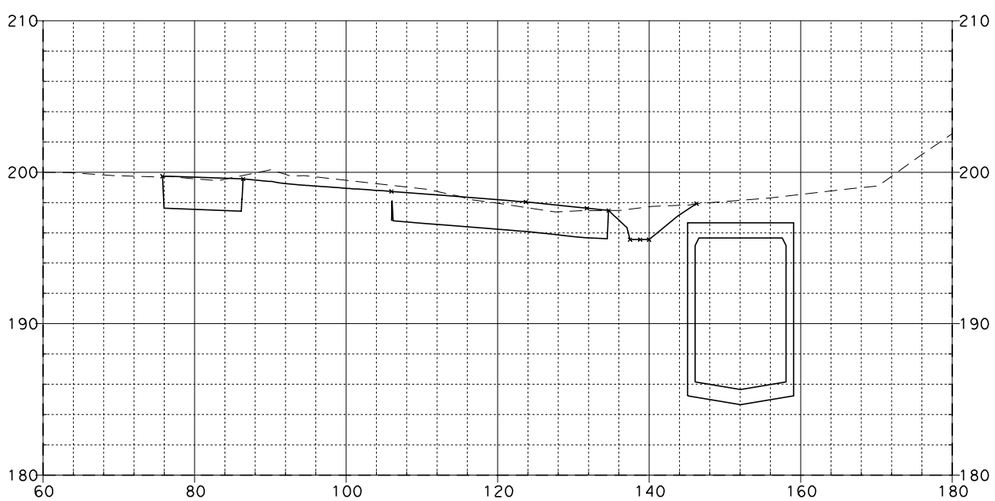

392+50.00

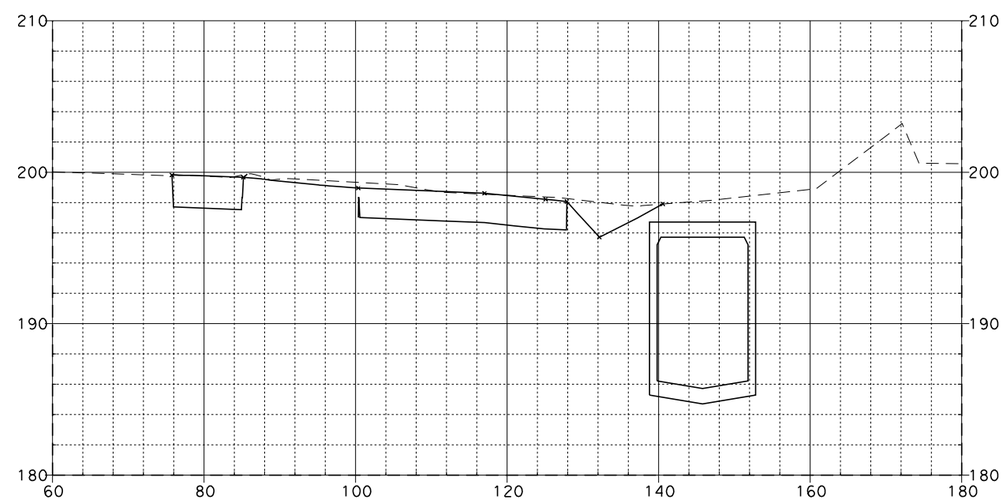

393+00.00

SR-57 MAINLINE

08\03\11

Dist	COUNTY	ROUTE	POST MILES TOTAL PROJECT	SHEET NO.	TOTAL SHEETS
12	Ora	57	12.2/15.2		

FOR EARTHWORK DEVELOPMENT ONLY

...\d0282599\Cross_Sections.dgn

EA 0F0401

SCALE: Horiz 1"=20'
Vert 1"=10'

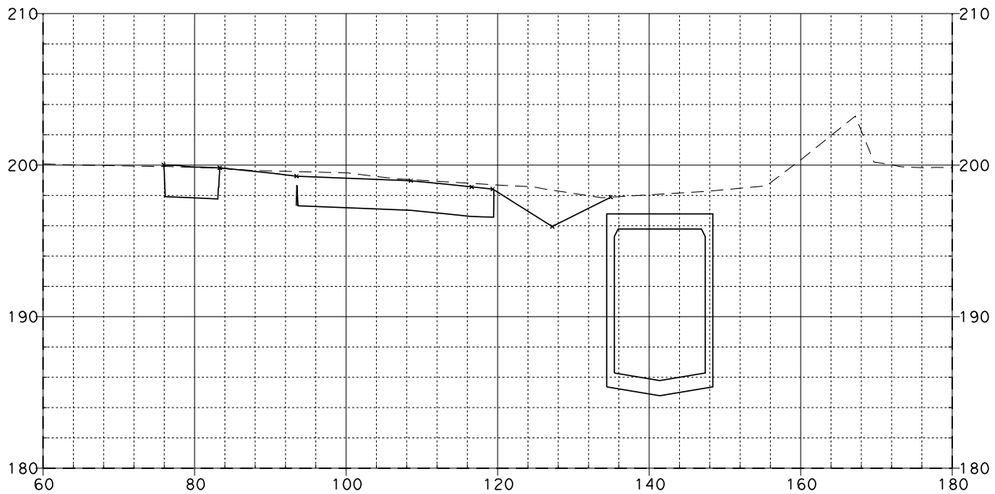

393+75.00

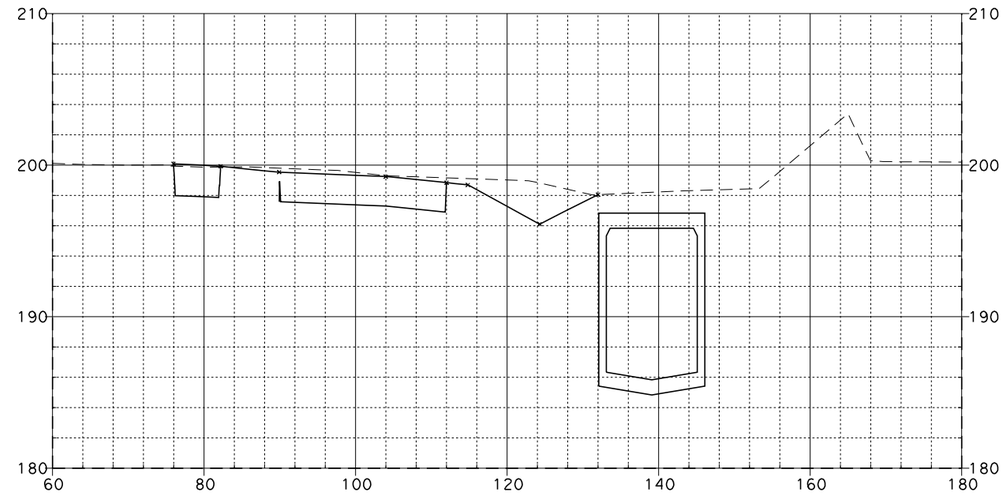

394+25.00

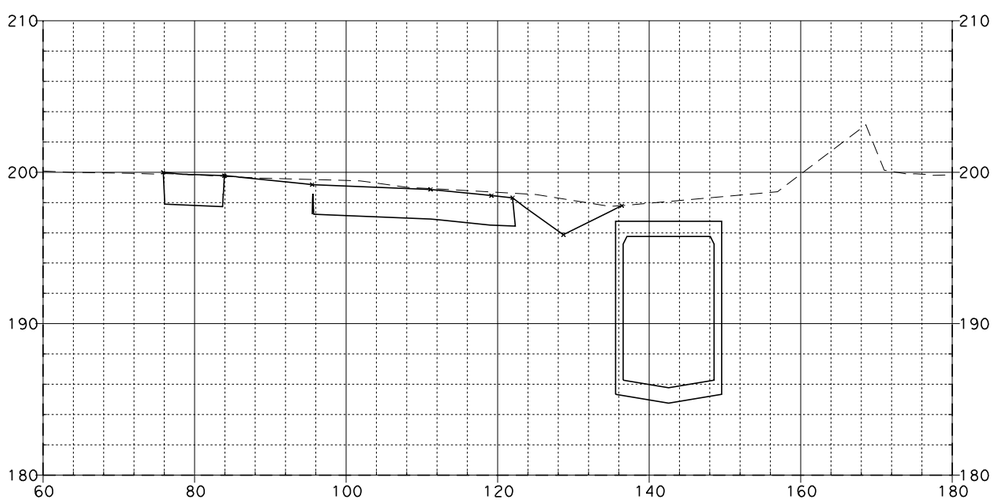

393+50.00

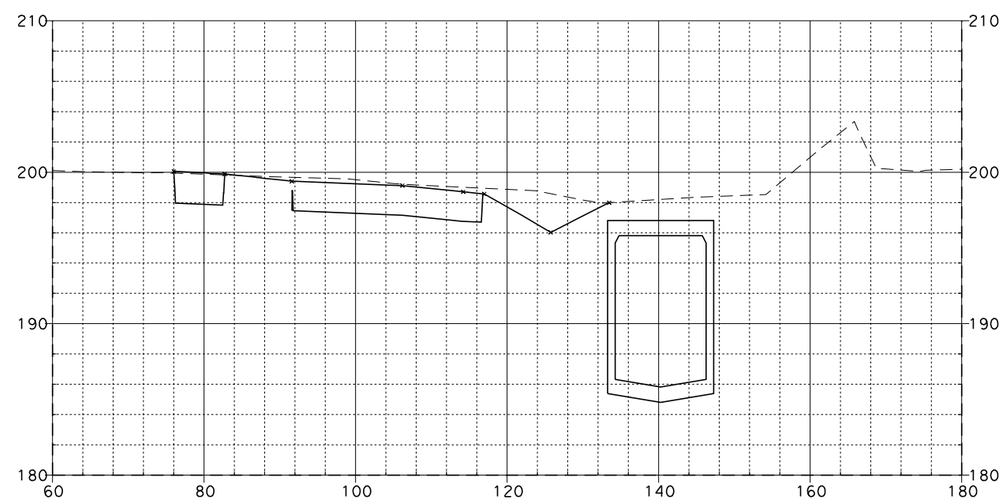

394+00.00

SR-57 MAINLINE

08\03\11

Dist	COUNTY	ROUTE	POST MILES TOTAL PROJECT	SHEET NO.	TOTAL SHEETS
12	Ora	57	12.2/15.2		

FOR EARTHWORK DEVELOPMENT ONLY

...\d0282599\Cross_Sections.dgn

EA 0F0401

SCALE: Horiz 1"=20'
Vert 1"=10'

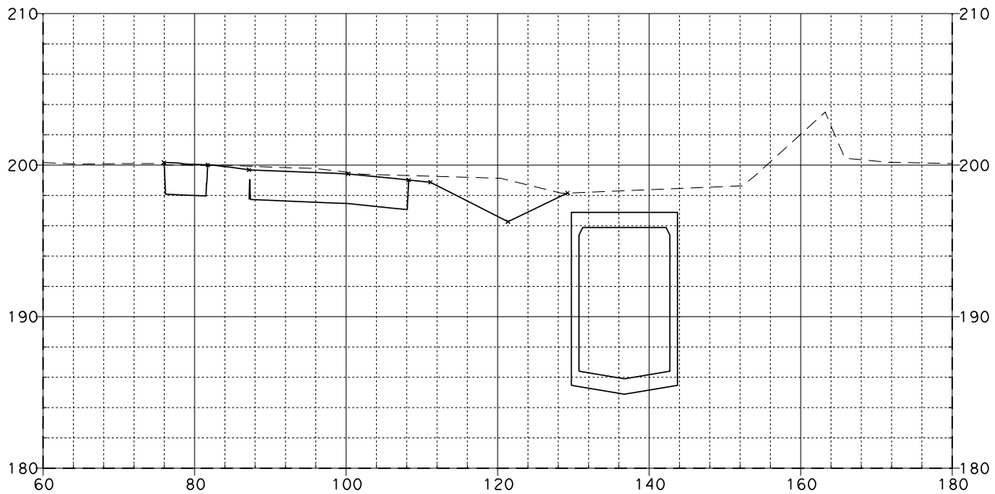

394+75.00

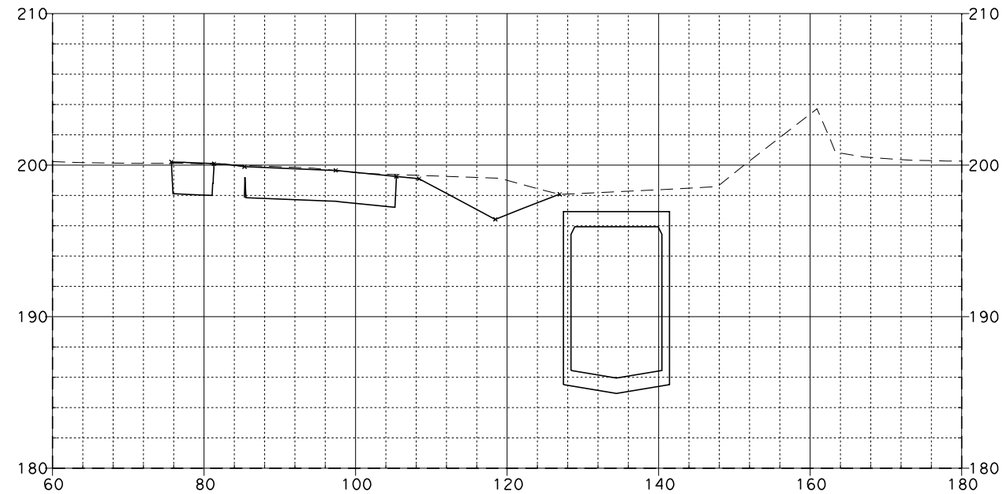

395+25.00

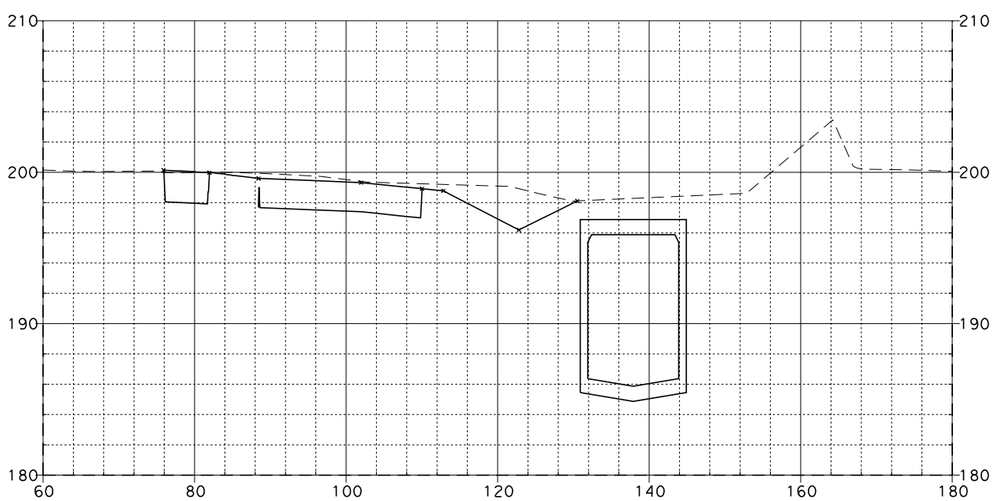

394+50.00

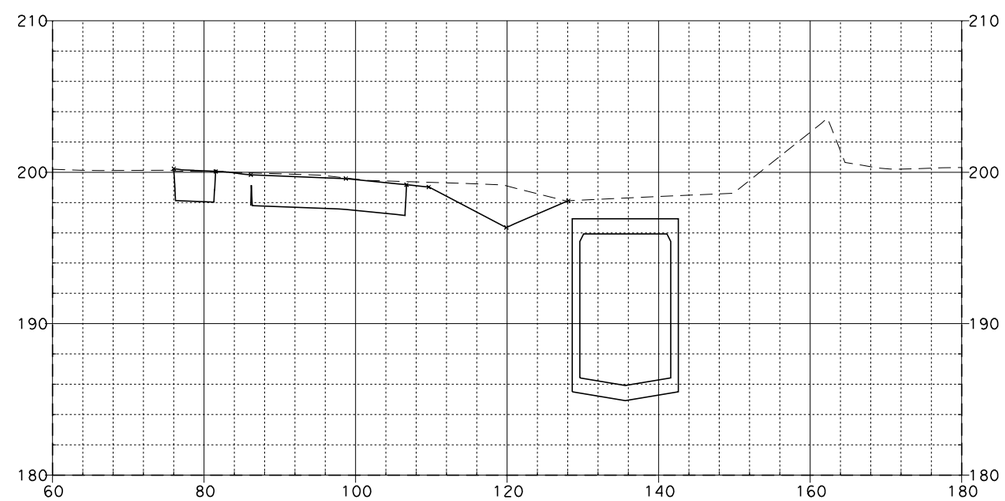

395+00.00

SR-57 MAINLINE

08\03\11

Dist	COUNTY	ROUTE	POST MILES TOTAL PROJECT	SHEET NO.	TOTAL SHEETS
12	Ora	57	12.2/15.2		

FOR EARTHWORK DEVELOPMENT ONLY

...\d0282599\Cross_Sections.dgn

EA 0F0401

SCALE: Horiz 1"=20'
Vert 1"=10'

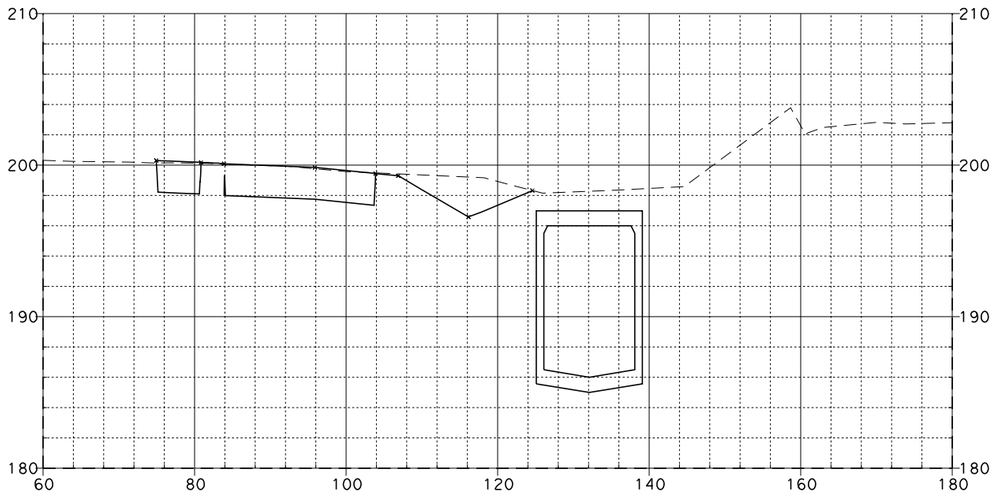

395+75.00

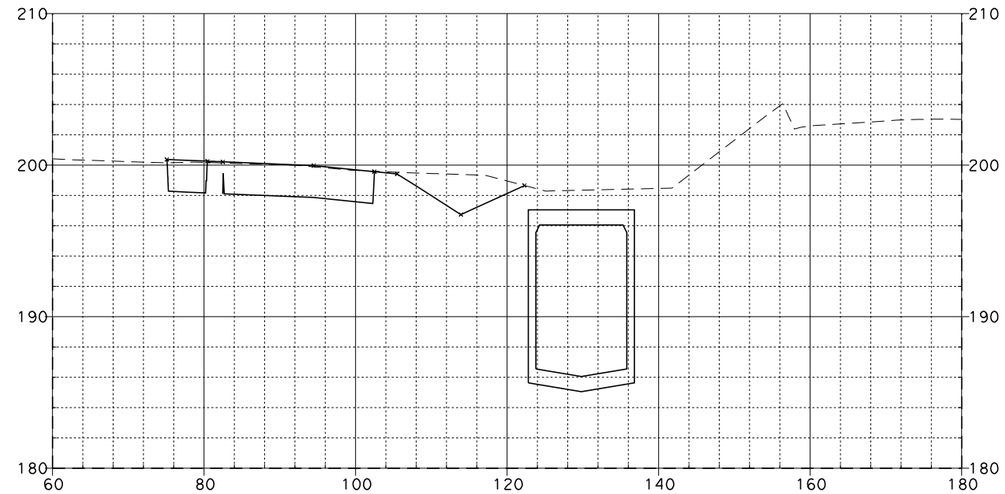

396+25.00

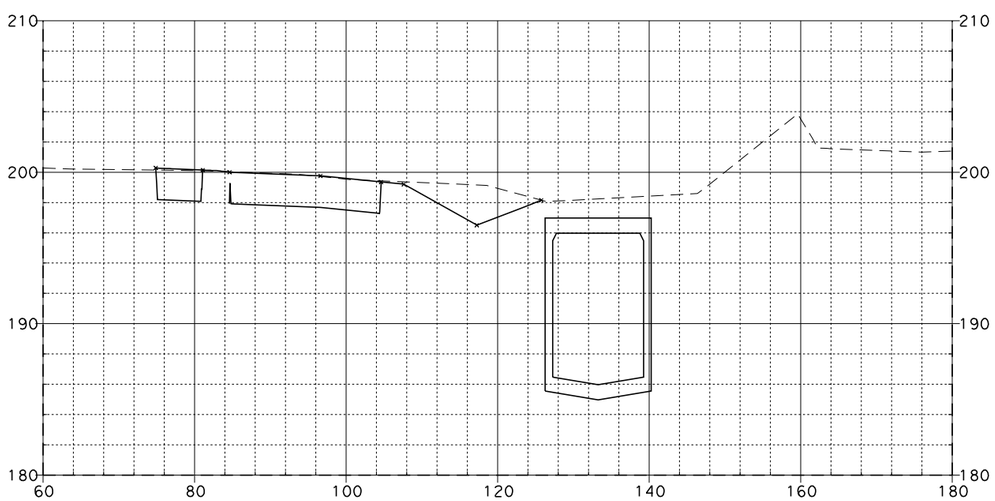

395+50.00

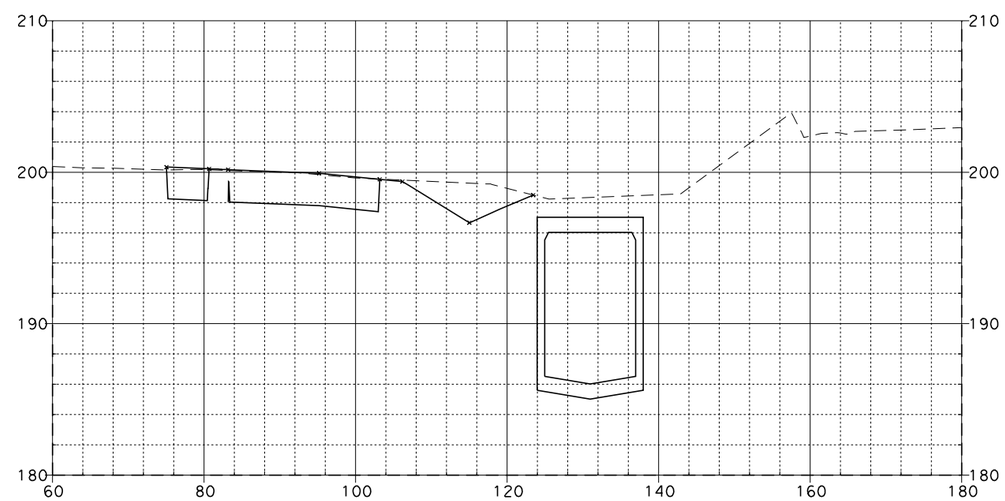

396+00.00

SR-57 MAINLINE

08\03\11

Dist	COUNTY	ROUTE	POST MILES TOTAL PROJECT	SHEET NO.	TOTAL SHEETS
12	Ora	57	12.2/15.2		

FOR EARTHWORK DEVELOPMENT ONLY

...\d0282599\Cross_Sections.dgn

EA 0F0401

SCALE: Horiz 1"=20'
Vert 1"=10'

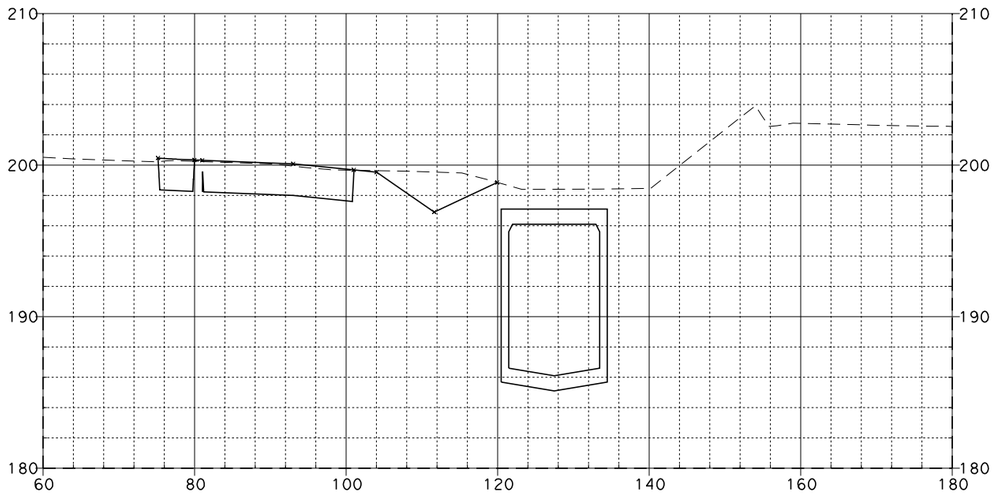

396+75.00

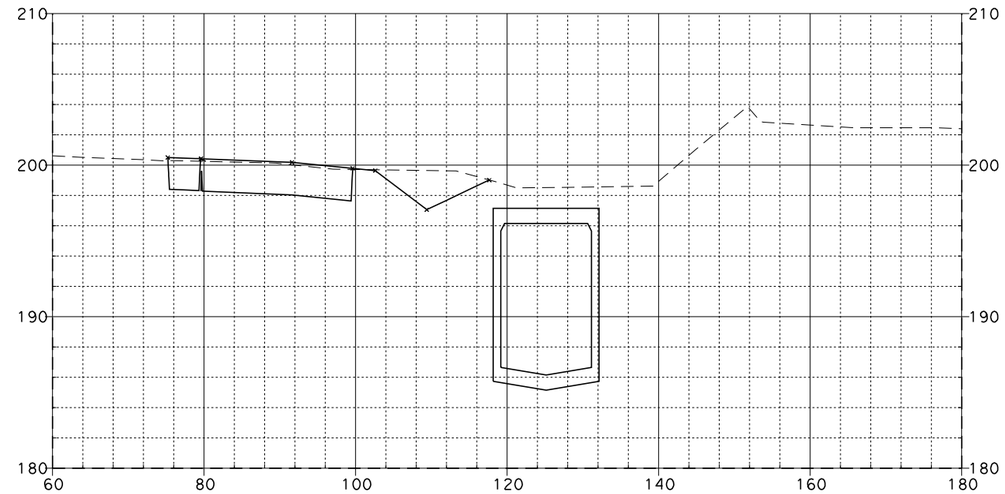

397+25.00

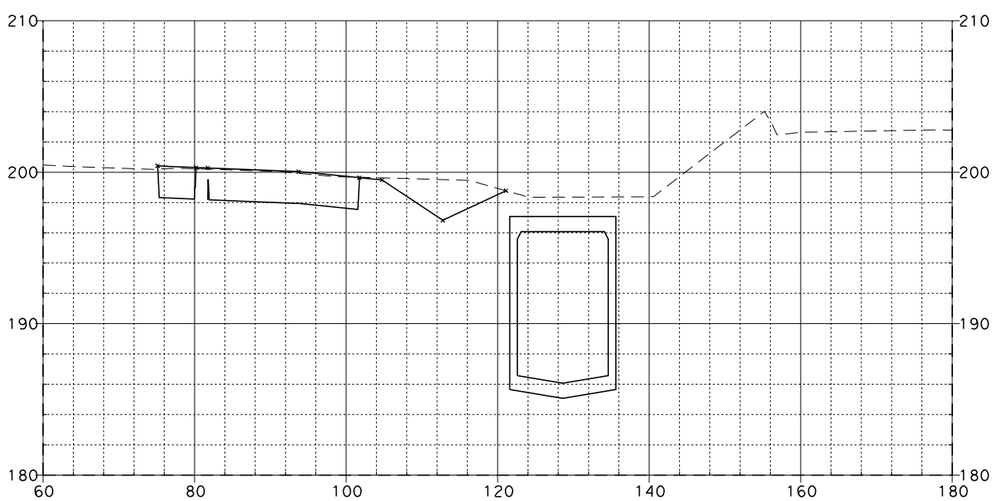

396+50.00

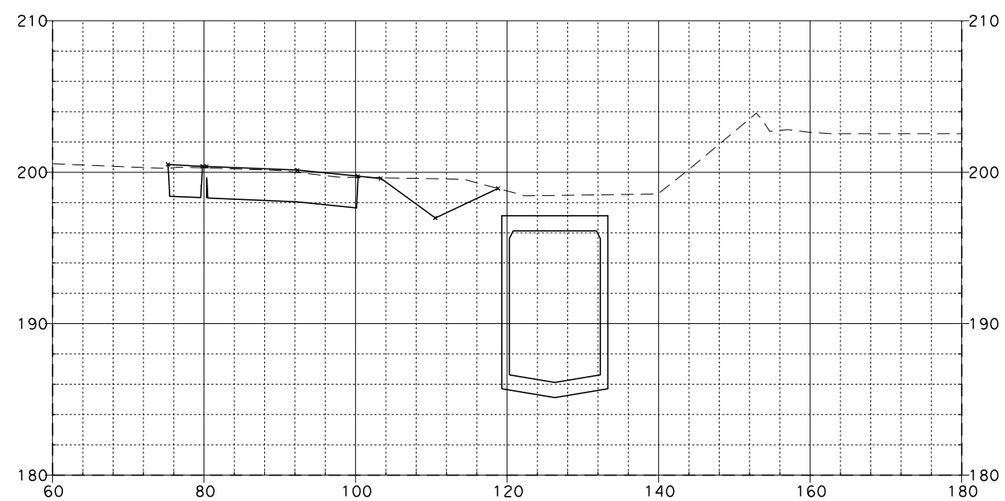

397+00.00

SR-57 MAINLINE

08\03\11

Dist	COUNTY	ROUTE	POST MILES TOTAL PROJECT	SHEET NO.	TOTAL SHEETS
12	Ora	57	12.2/15.2		

FOR EARTHWORK DEVELOPMENT ONLY

...\d0282599\Cross_Sections.dgn

EA 0F0401

SCALE: Horiz 1"=20'
Vert 1"=10'

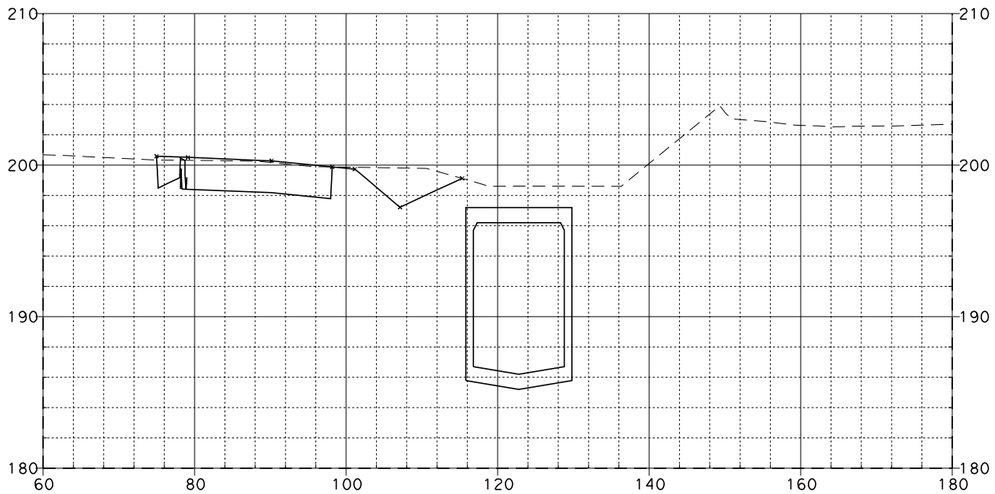

397+75.00

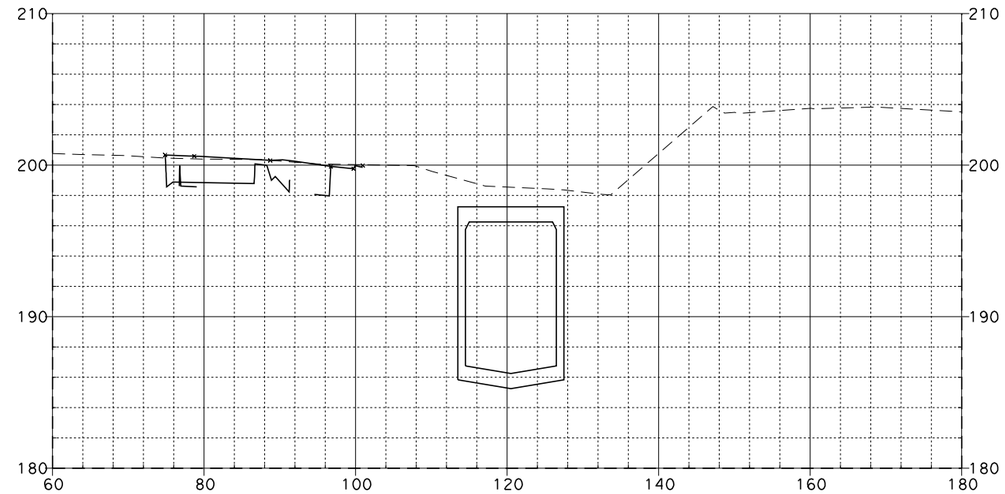

398+25.00

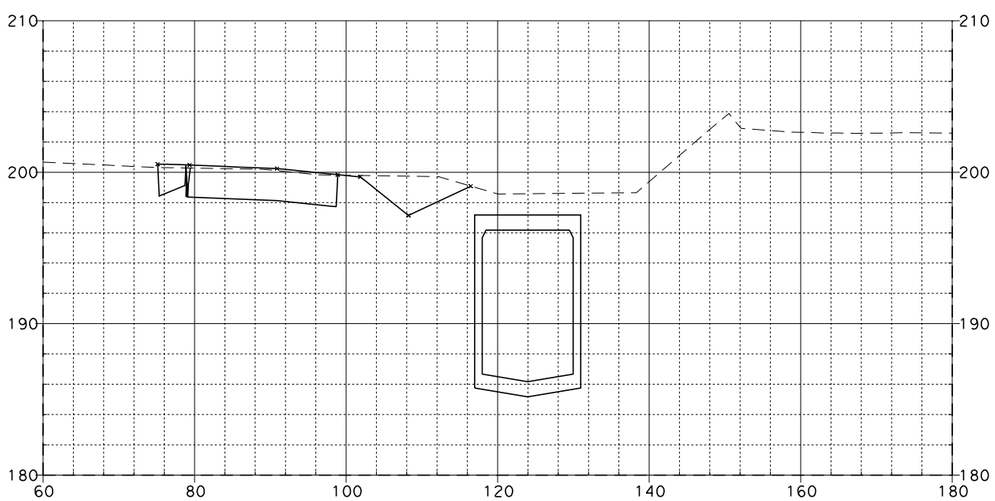

397+50.00

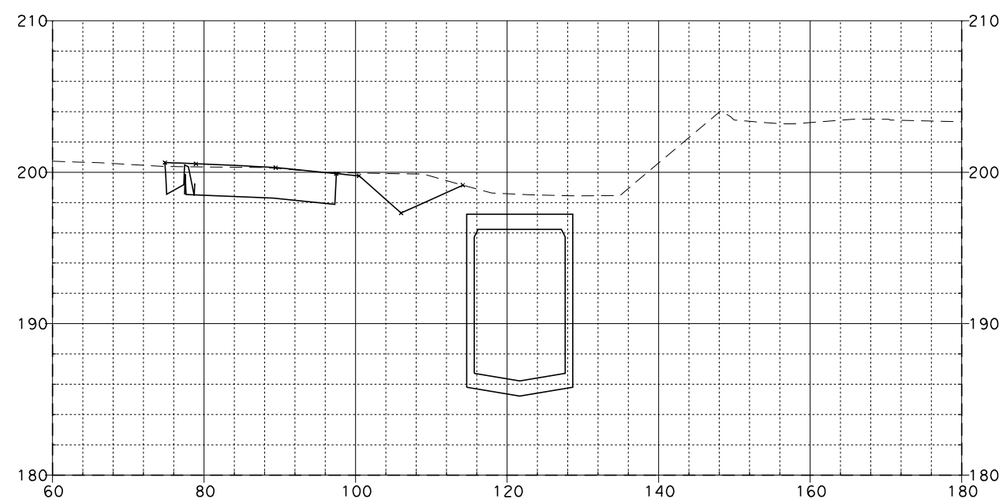

398+00.00

SR-57 MAINLINE

08\03\11

Dist	COUNTY	ROUTE	POST MILES TOTAL PROJECT	SHEET NO.	TOTAL SHEETS
12	Ora	57	12.2/15.2		

FOR EARTHWORK DEVELOPMENT ONLY

...\d0282599\Cross_Sections.dgn

EA 0F0401

SCALE: Horiz 1"=20'
Vert 1"=10'

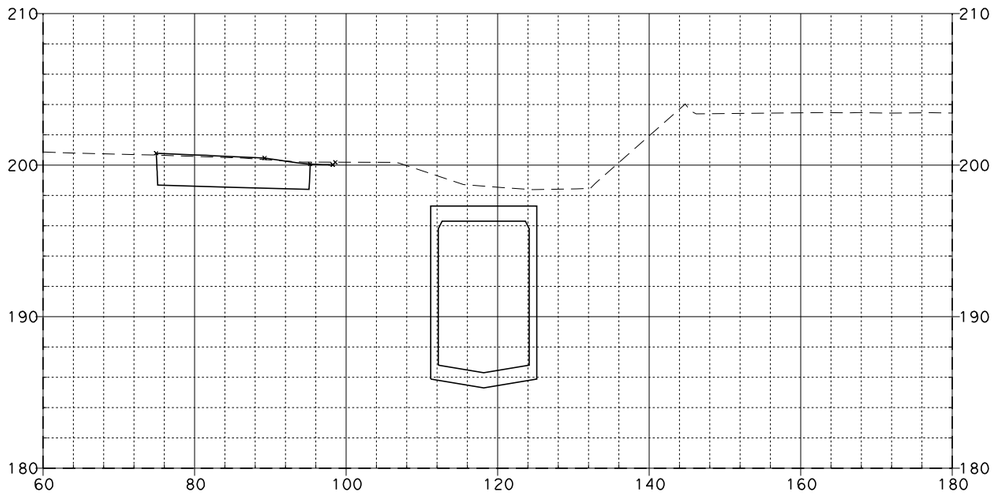

398+75.00

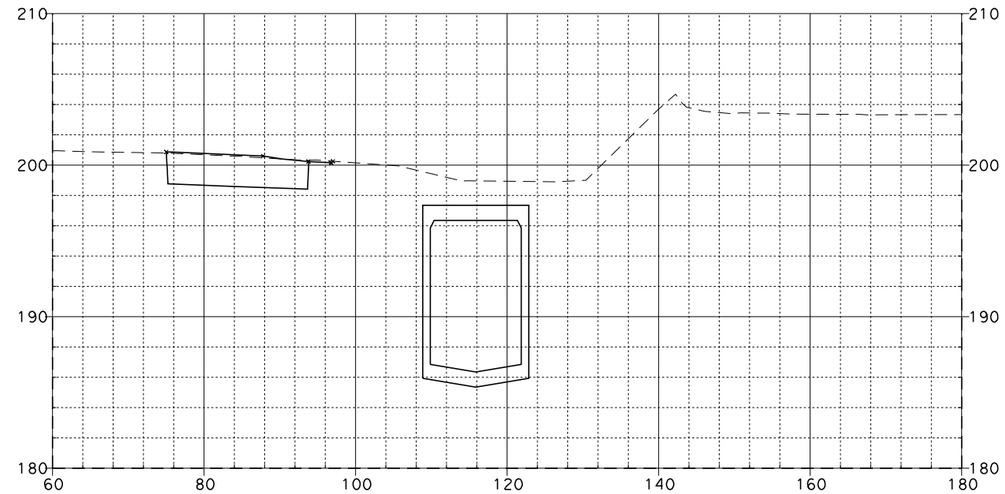

399+25.00

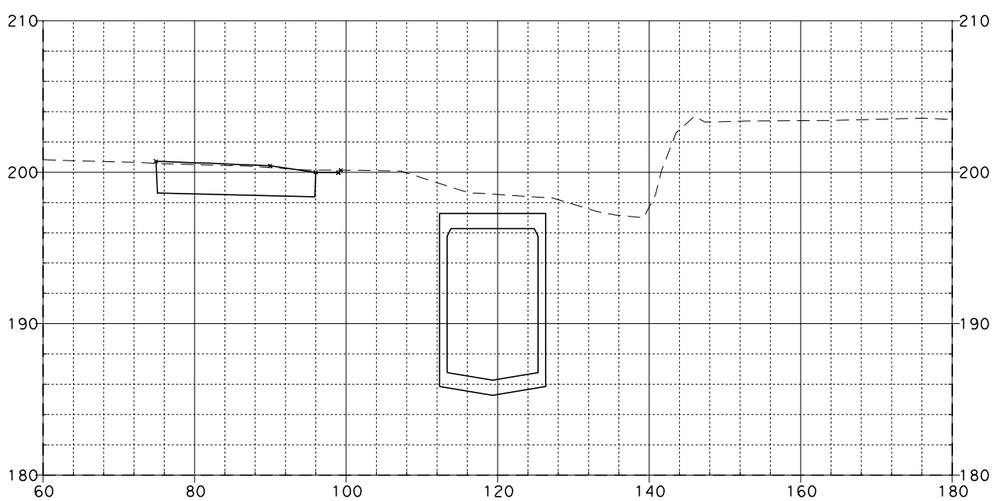

398+50.00

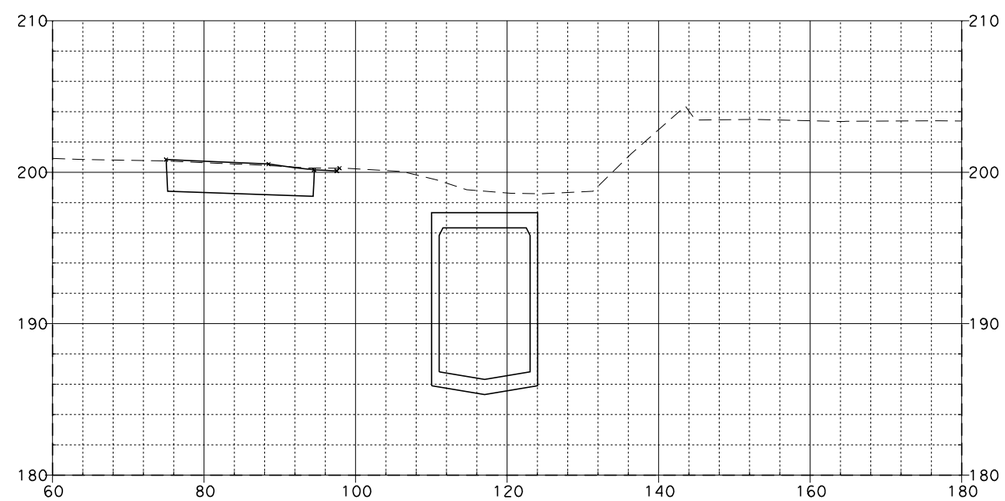

399+00.00

SR-57 MAINLINE

08\03\11

Dist	COUNTY	ROUTE	POST MILES TOTAL PROJECT	SHEET NO.	TOTAL SHEETS
12	Ora	57	12.2/15.2		

FOR EARTHWORK DEVELOPMENT ONLY

...\d0282599\Cross_Sections.dgn

EA 0F0401

SCALE: Horiz 1"=20'
Vert 1"=10'

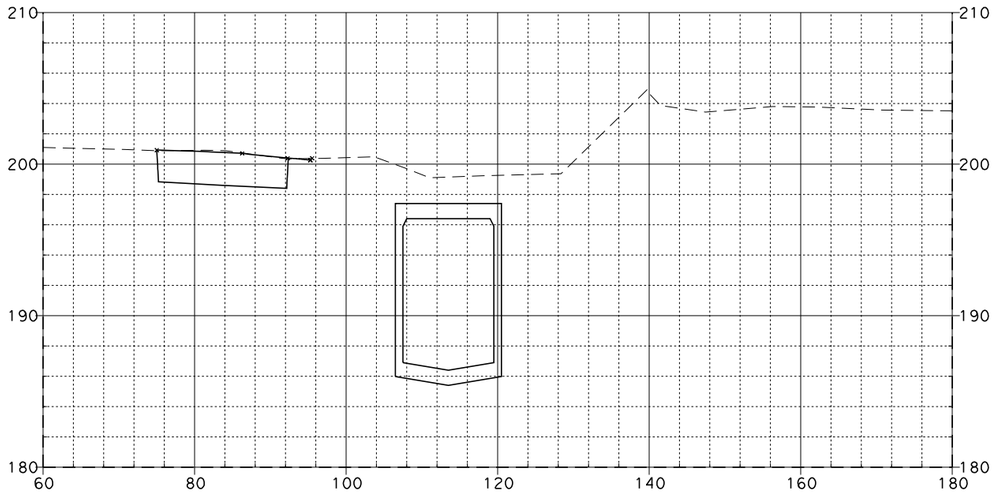

399+75.00

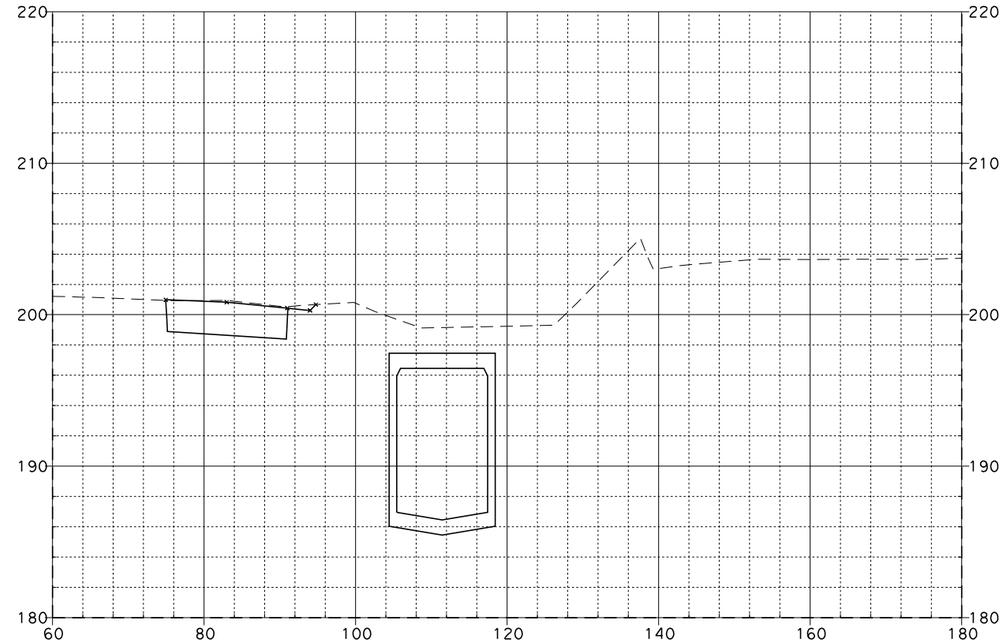

400+20.00

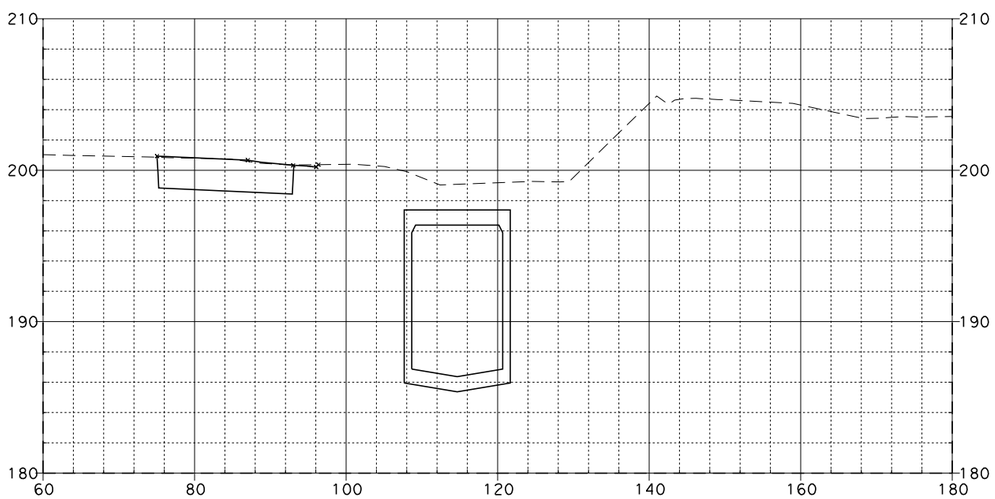

399+50.00

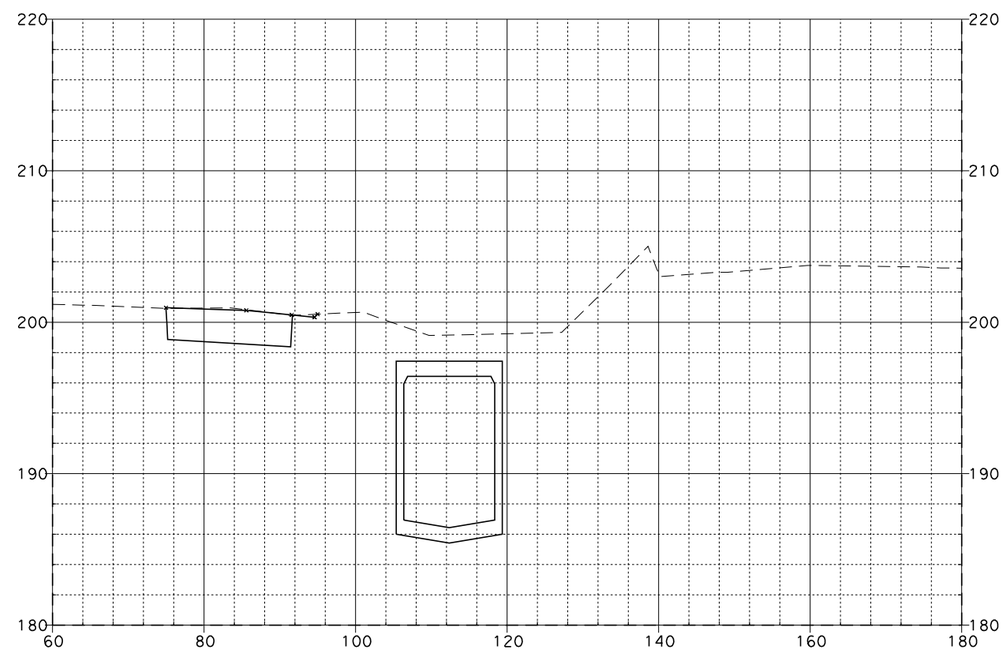

400+00.00

SR-57 MAINLINE

08\03\11

Dist	COUNTY	ROUTE	POST MILES TOTAL PROJECT	SHEET No.	TOTAL SHEETS
12	Ora	57	12.2/15.2		

FOR EARTHWORK DEVELOPMENT ONLY

...\d0282599\Cross_Sections.dgn

EA 0F0401

SCALE: Horiz 1"=20'
Vert 1"=10'

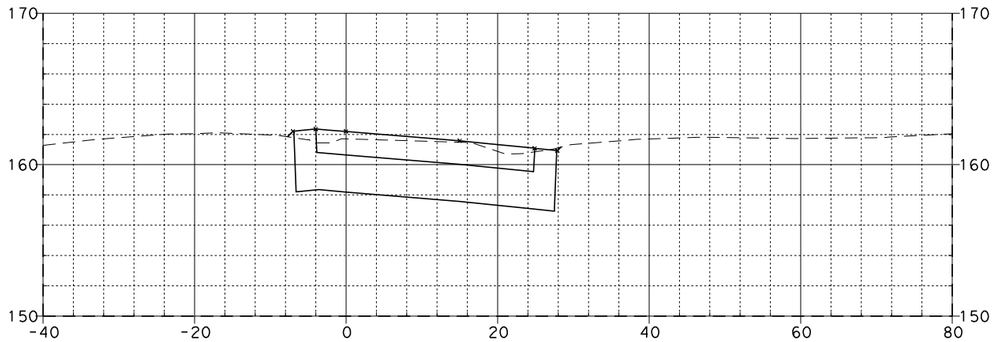

59+50.00

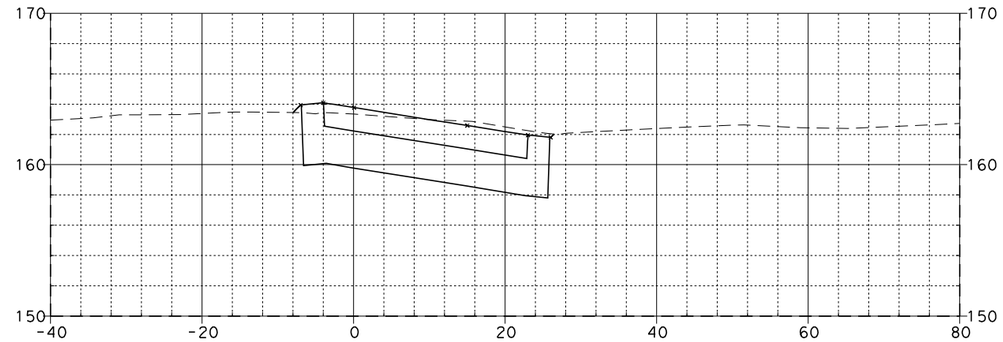

60+13.48

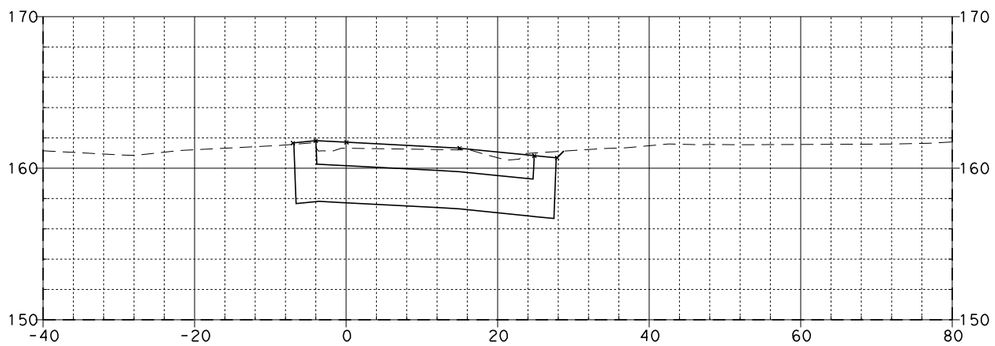

59+25.00

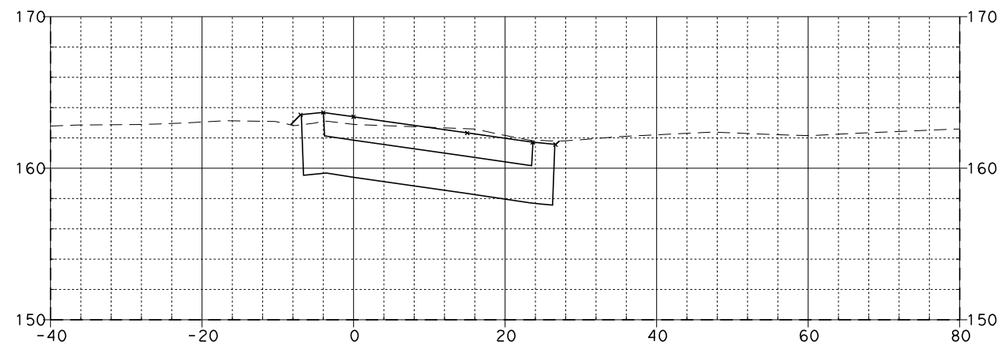

60+00.00

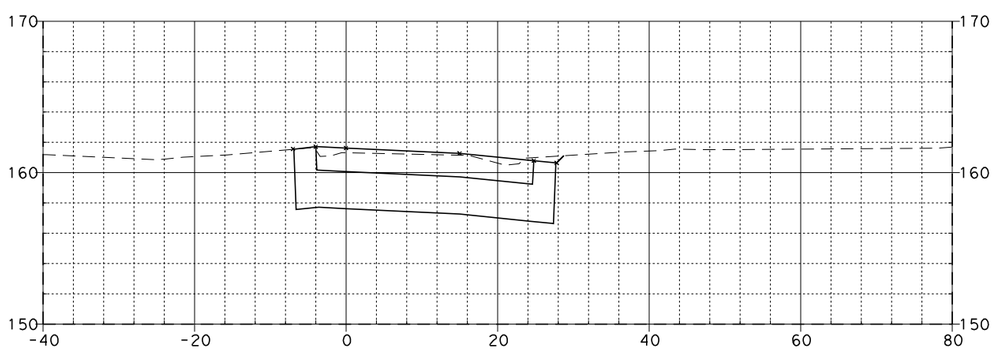

59+20.00

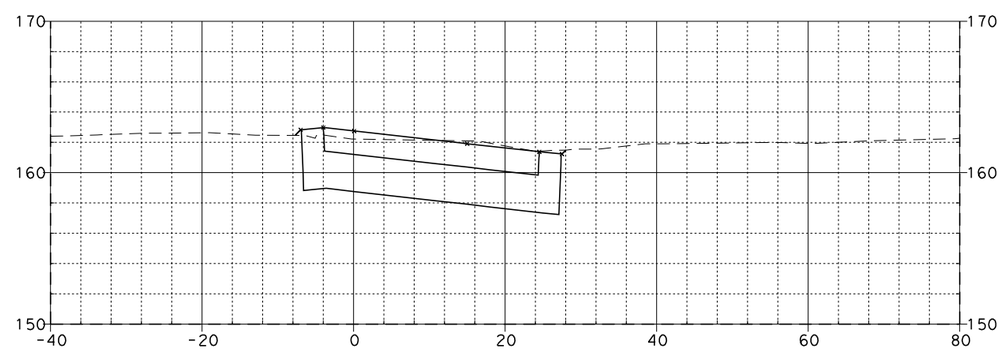

59+75.00

KATELLA LOOP ON-RAMP "C-3"

08\03\11

Dist	COUNTY	ROUTE	POST MILES TOTAL PROJECT	SHEET NO.	TOTAL SHEETS
12	Ora	57	12.2/15.2		

FOR EARTHWORK DEVELOPMENT ONLY

...\d0282599\Cross_Sections.dgn

EA 0F0401

SCALE: Horiz 1"=20'
Vert 1"=10'

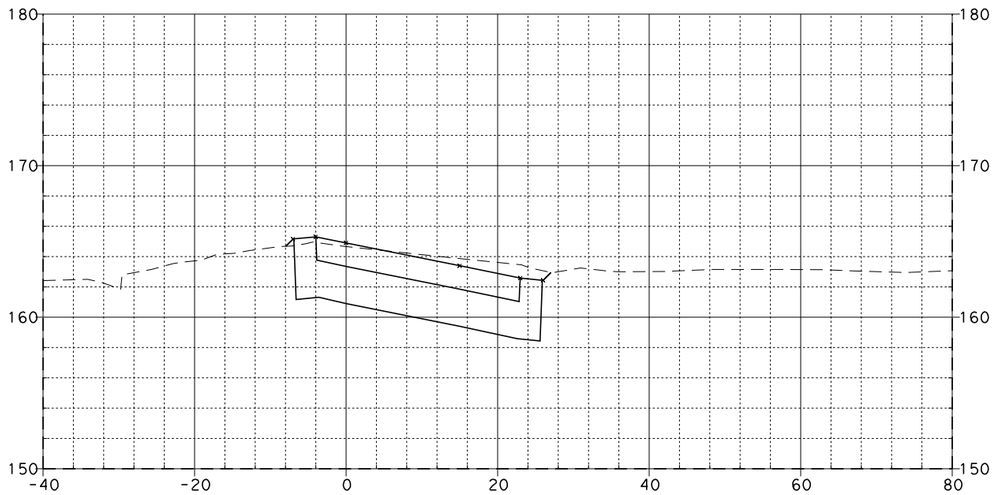

60+50.00

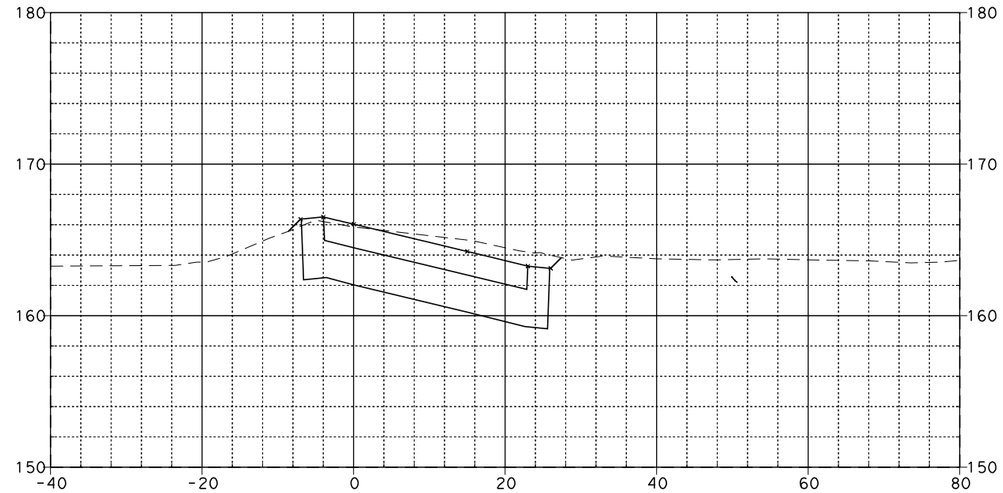

60+82.00

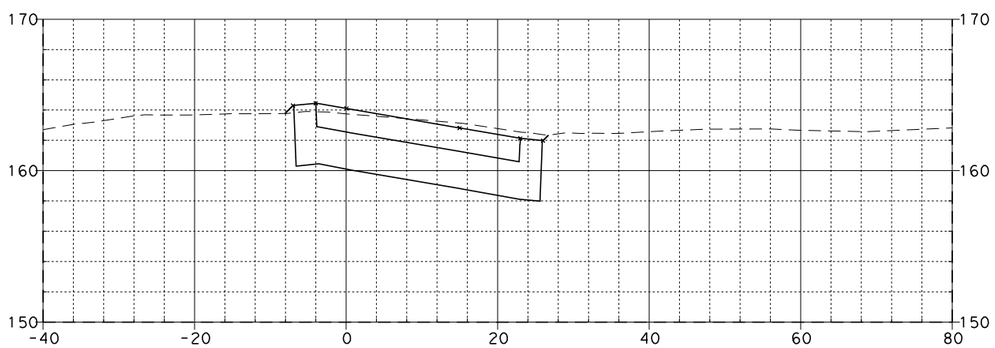

60+25.00

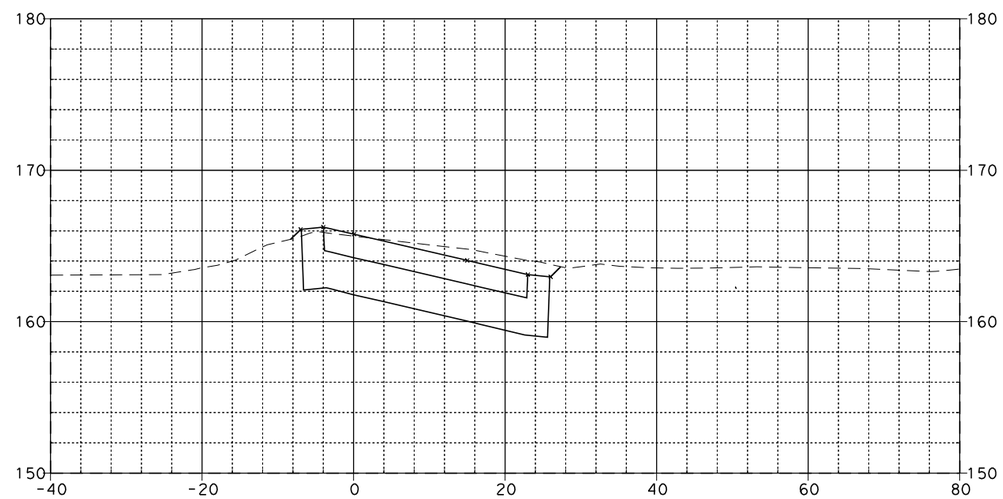

60+75.00

KATELLA LOOP ON-RAMP "C-3"

08\03\11

Dist	COUNTY	ROUTE	POST MILES TOTAL PROJECT	SHEET No.	TOTAL SHEETS
12	Ora	57	12.2/15.2		

FOR EARTHWORK DEVELOPMENT ONLY

...\d0282599\Cross_Sections.dgn

EA 0F0401

SCALE: Horiz 1"=20'
Vert 1"=10'

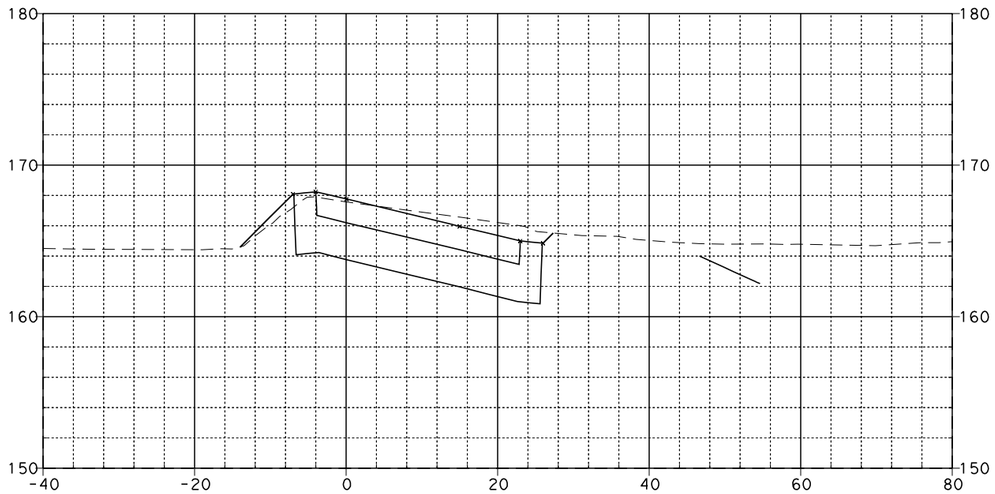

61+25.00

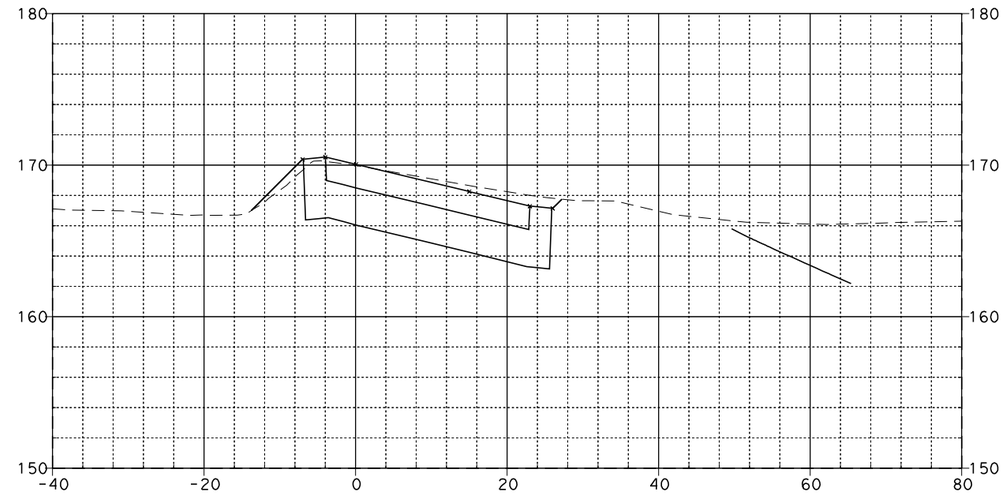

61+75.00

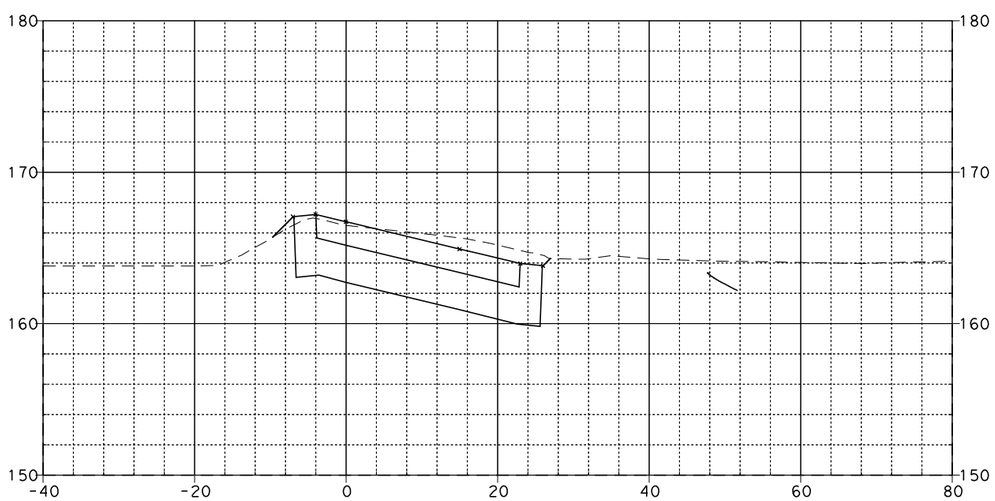

61+00.00

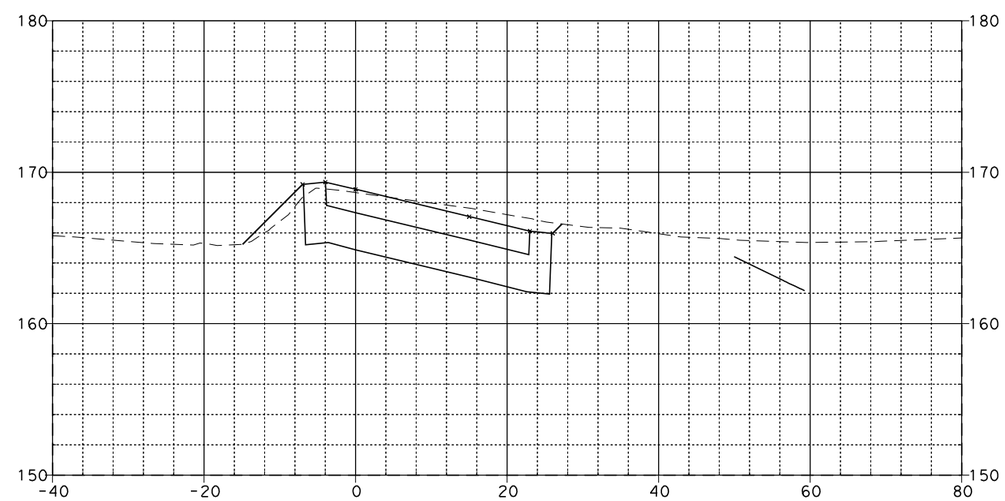

61+50.00

KATELLA LOOP ON-RAMP "C-3"

08\03\11

Dist	COUNTY	ROUTE	POST MILES TOTAL PROJECT	SHEET NO.	TOTAL SHEETS
12	Ora	57	12.2/15.2		

FOR EARTHWORK DEVELOPMENT ONLY

...\d0282599\Cross_Sections.dgn

EA 0F0401

SCALE: Horiz 1"=20'
Vert 1"=10'

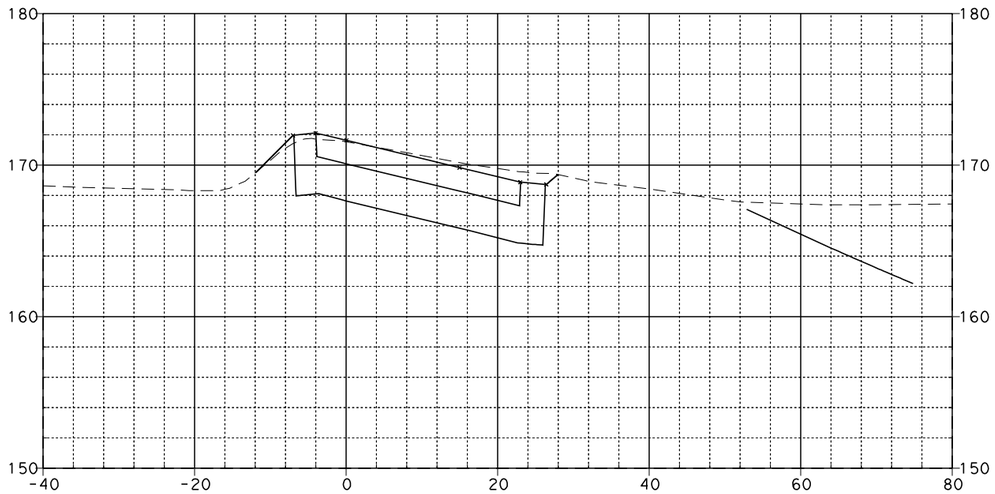

62+06.03

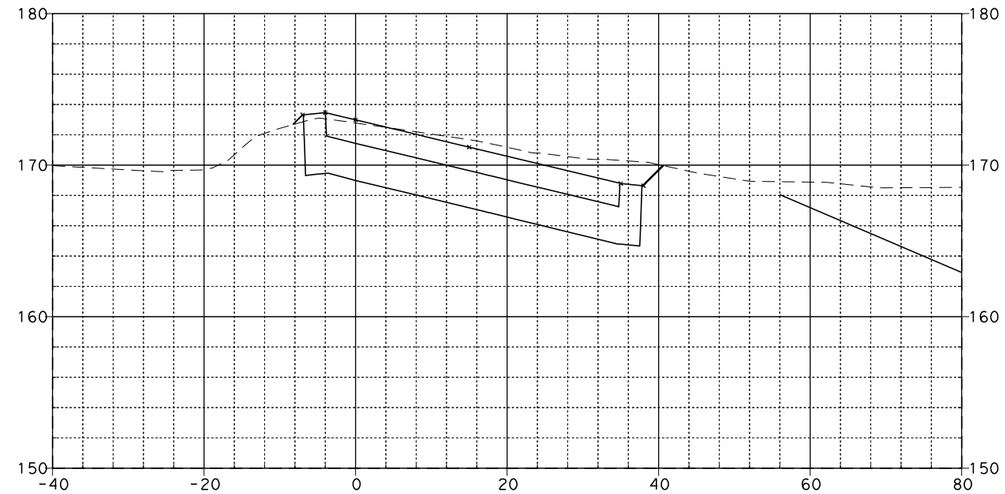

62+30.86

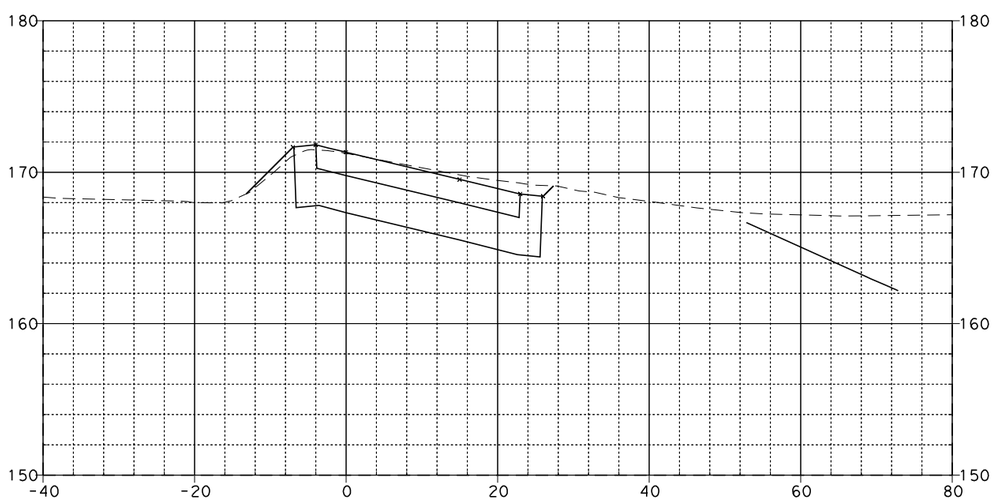

62+00.00

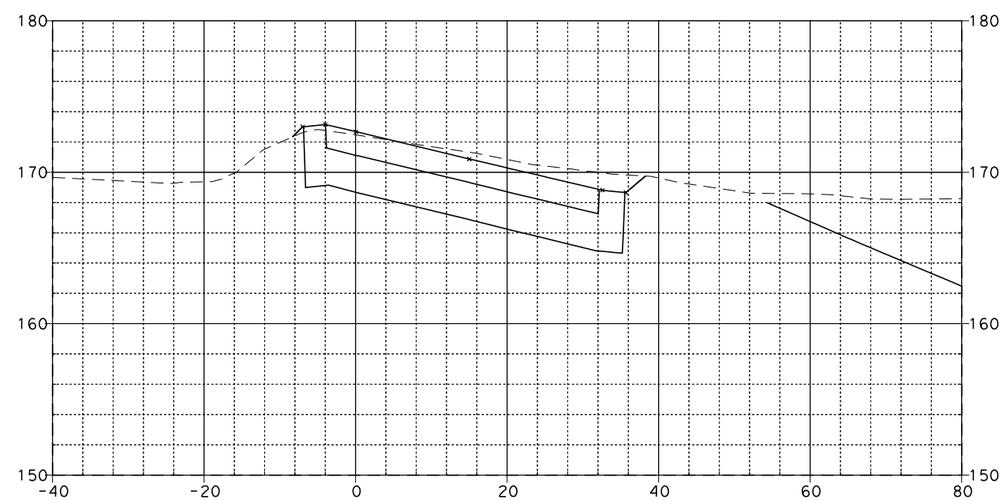

62+25.00

KATELLA LOOP ON-RAMP "C-3"

08\03\11

Dist	COUNTY	ROUTE	POST MILES TOTAL PROJECT	SHEET NO.	TOTAL SHEETS
12	Ora	57	12.2/15.2		

FOR EARTHWORK DEVELOPMENT ONLY

...\d0282599\Cross_Sections.dgn

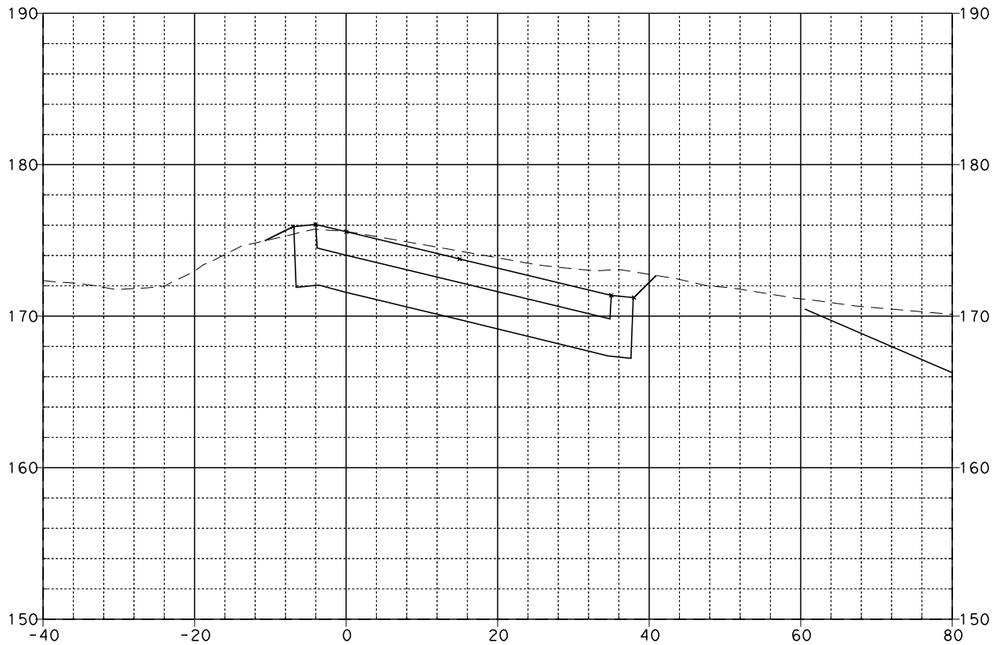

62+75.00

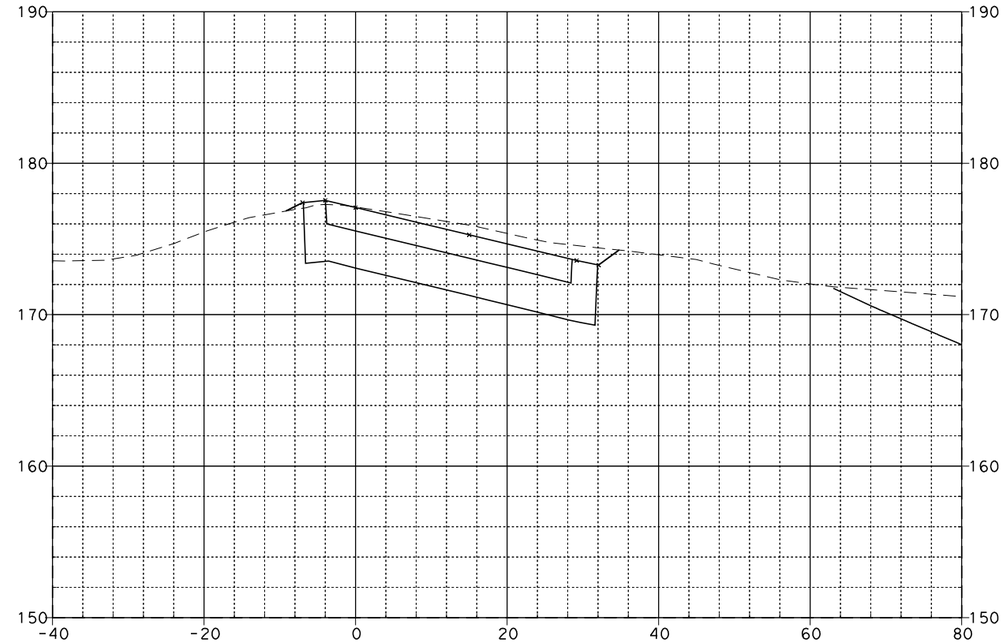

63+00.00

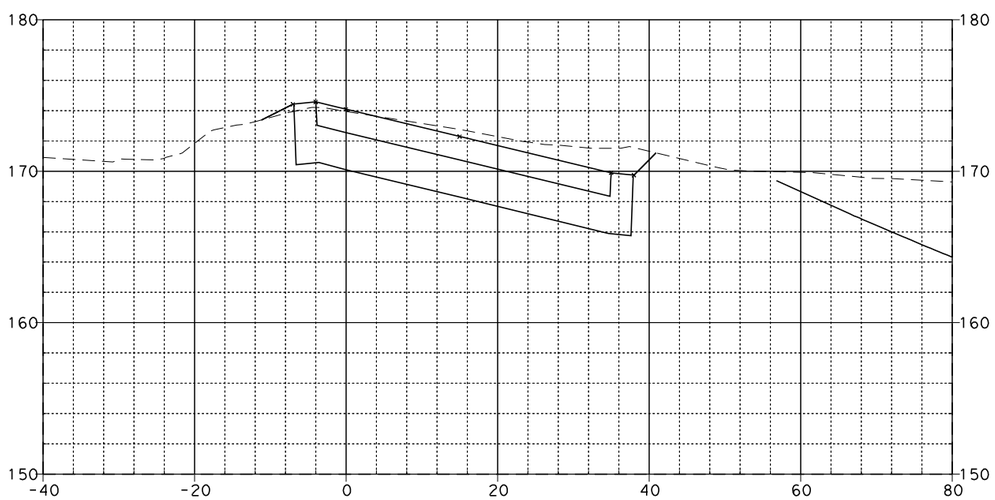

62+50.00

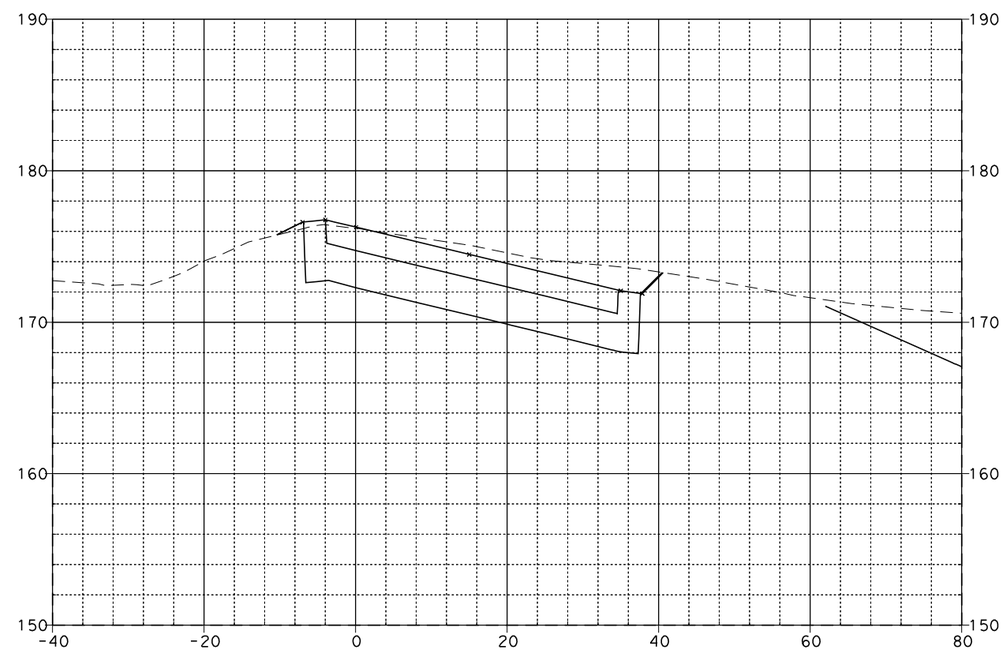

62+86.72

KATELLA LOOP ON-RAMP "C-3"

EA 0F0401

SCALE: Horiz 1"=20'
Vert 1"=10'

08\03\11

Dist	COUNTY	ROUTE	POST MILES TOTAL PROJECT	SHEET No.	TOTAL SHEETS
12	Ora	57	12.2/15.2		

FOR EARTHWORK DEVELOPMENT ONLY

...\d0282599\Cross_Sections.dgn

EA 0F0401

SCALE: Horiz 1"=20'
Vert 1"=10'

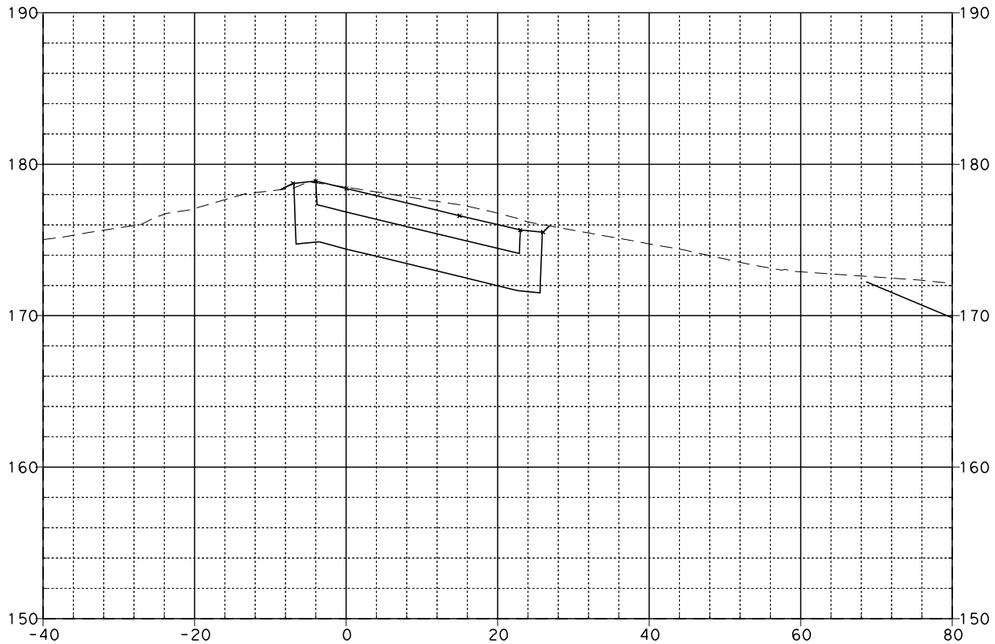

63+22.28

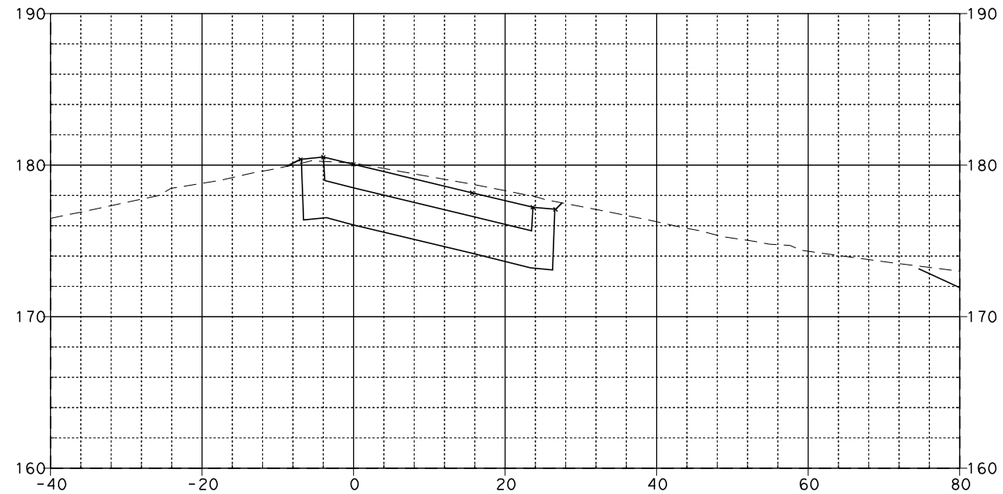

63+50.00

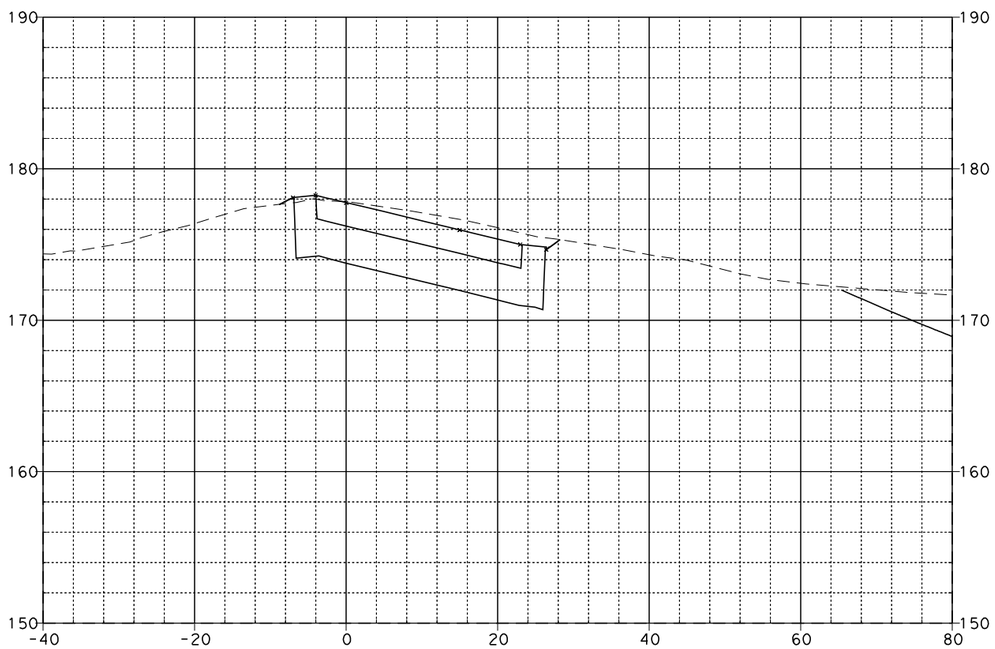

63+11.55

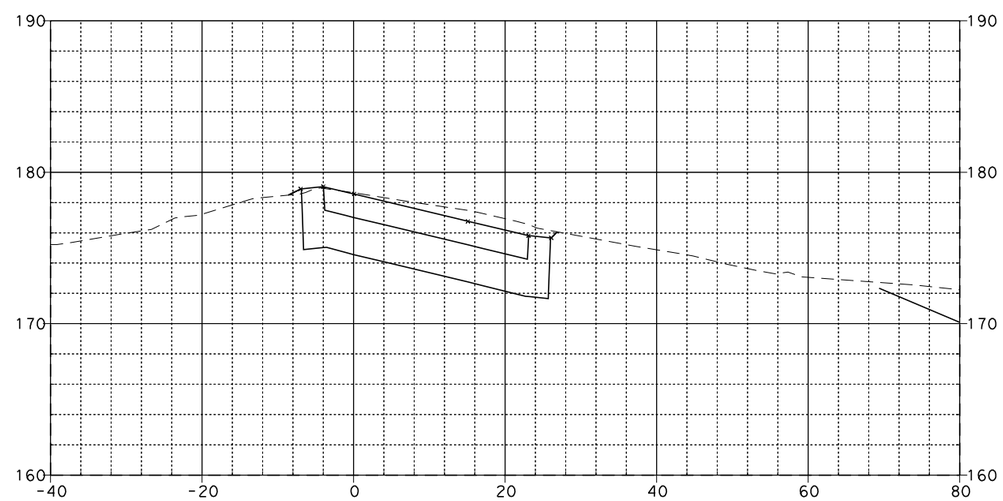

63+25.00

KATELLA LOOP ON-RAMP "C-3"

08\03\11

Dist	COUNTY	ROUTE	POST MILES TOTAL PROJECT	SHEET No.	TOTAL SHEETS
12	Ora	57	12.2/15.2		

FOR EARTHWORK DEVELOPMENT ONLY

...\d0282599\Cross_Sections.dgn

EA 0F0401

SCALE: Horiz 1"=20'
Vert 1"=10'

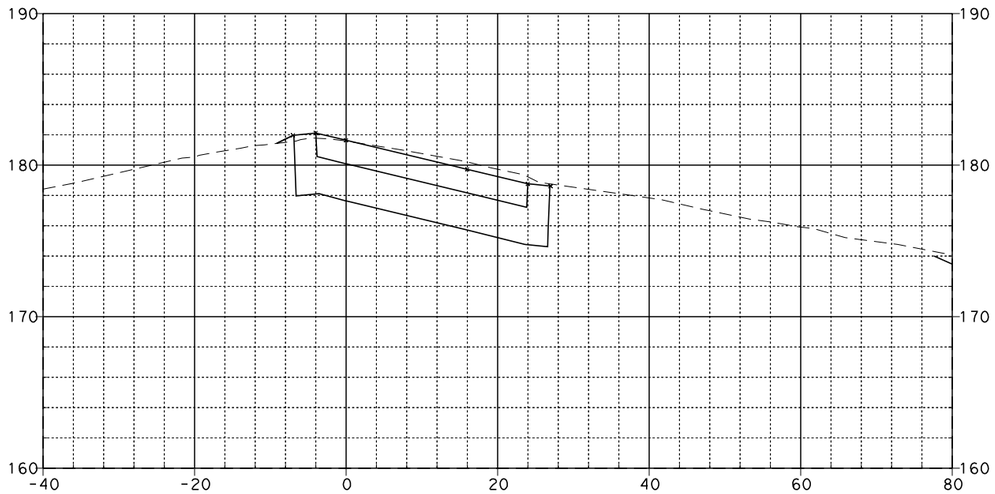

63+76.82

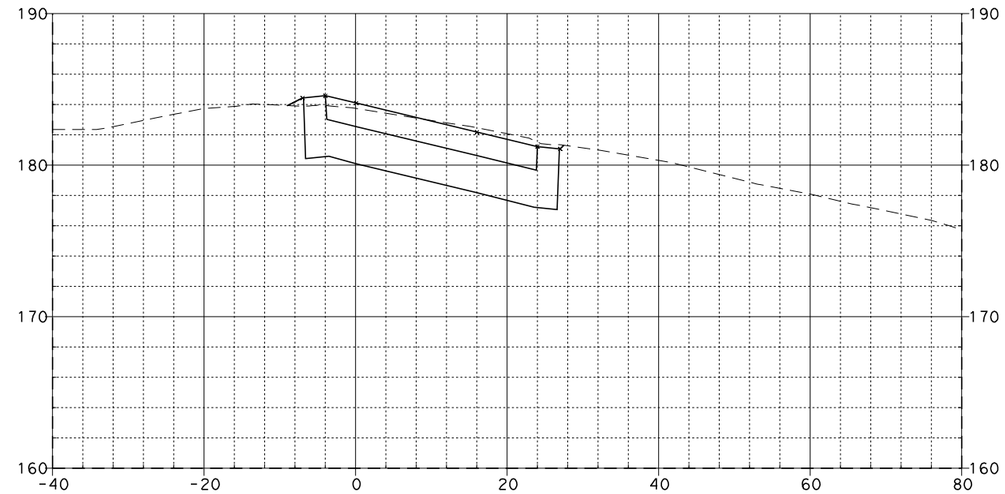

64+25.00

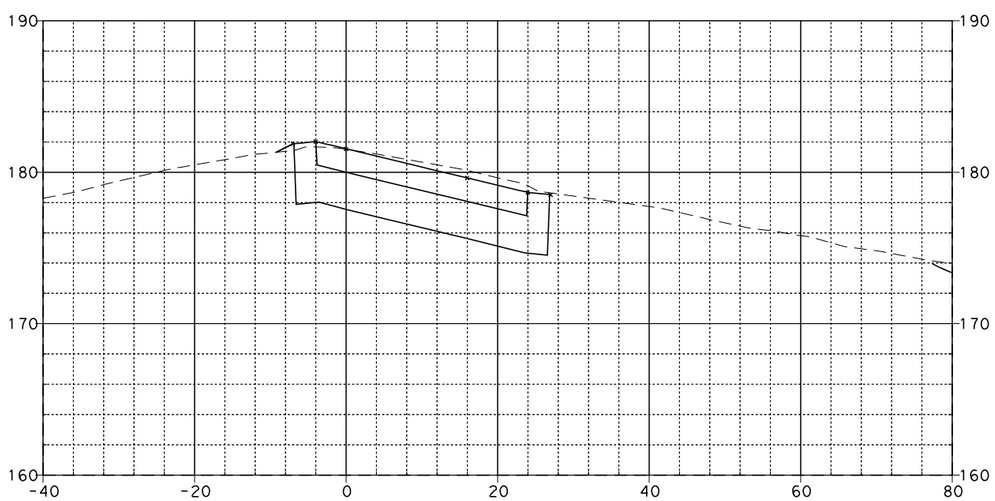

63+75.00

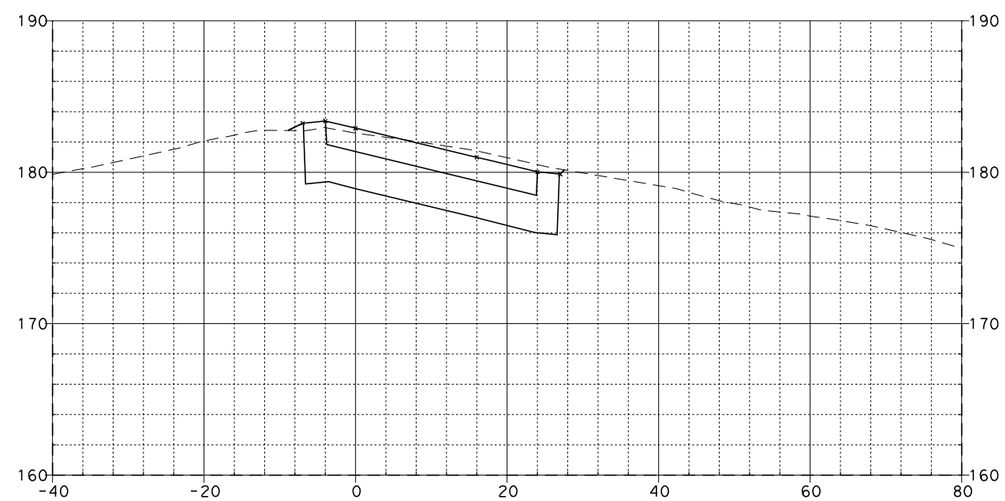

64+00.00

KATELLA LOOP ON-RAMP "C-3"

08\03\11

Dist	COUNTY	ROUTE	POST MILES TOTAL PROJECT	SHEET NO.	TOTAL SHEETS
12	Ora	57	12.2/15.2		

FOR EARTHWORK DEVELOPMENT ONLY

...\d0282599\Cross_Sections.dgn

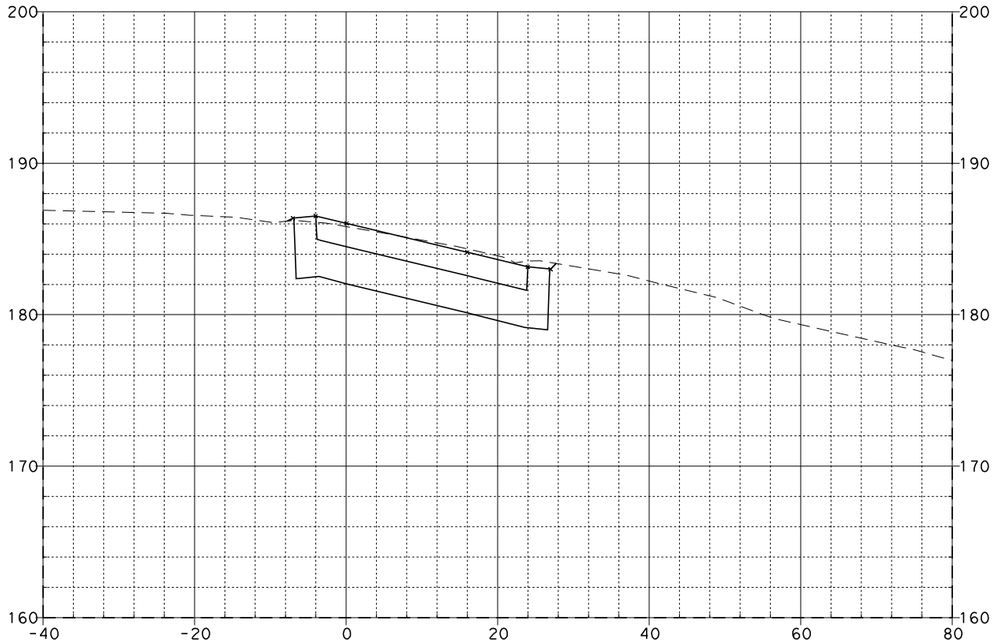

64+75.00

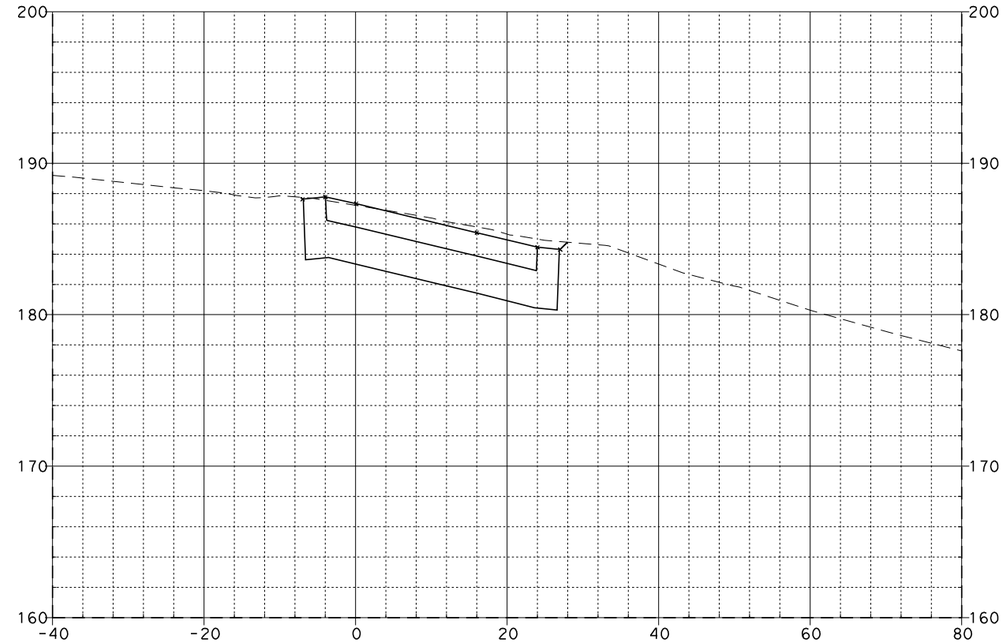

65+25.00

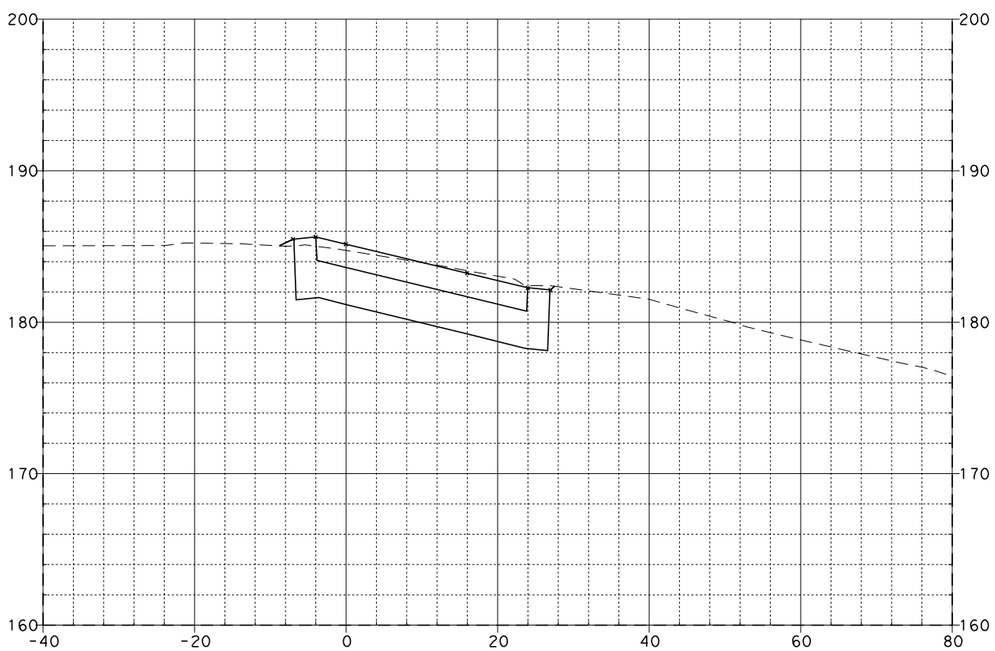

64+50.00

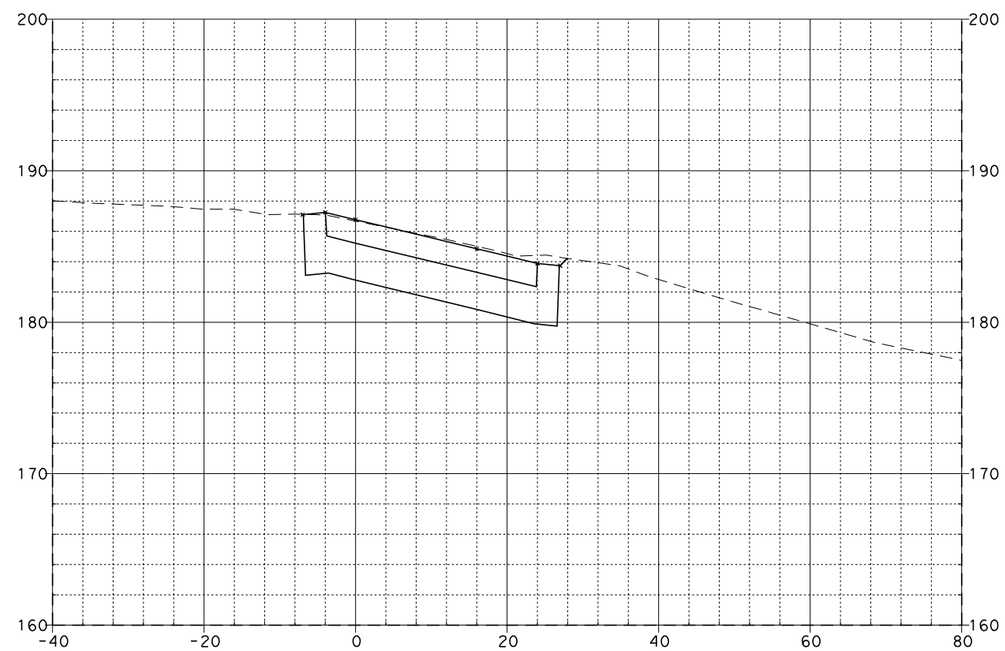

65+00.00

KATELLA LOOP ON-RAMP "C-3"

EA 0F0401

SCALE: Horiz 1"=20'
Vert 1"=10'

08\03\11

Dist	COUNTY	ROUTE	POST MILES TOTAL PROJECT	SHEET No.	TOTAL SHEETS
12	Ora	57	12.2/15.2		

FOR EARTHWORK DEVELOPMENT ONLY

...\d0282599\Cross_Sections.dgn

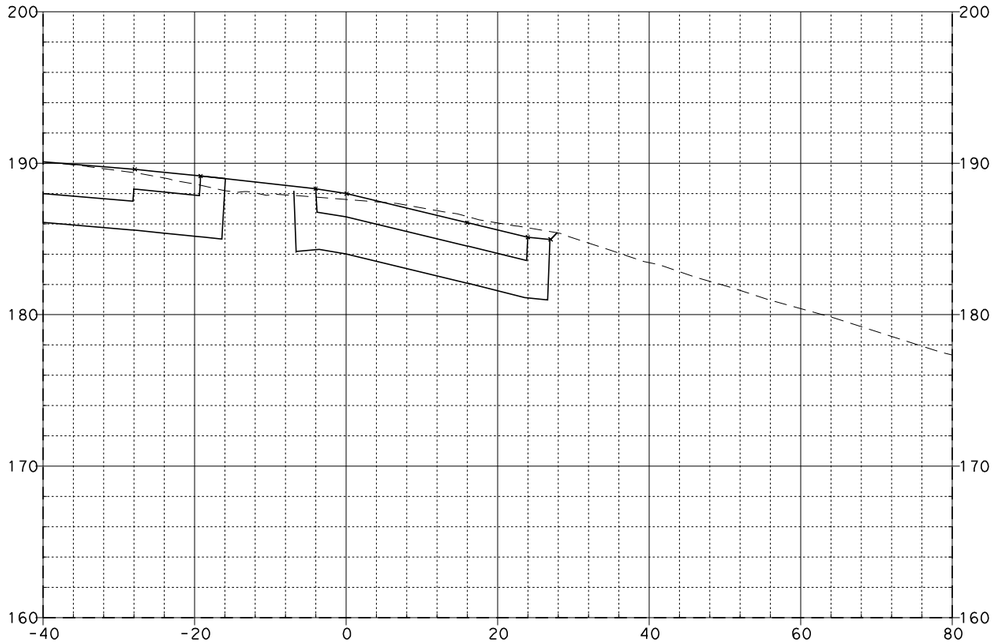

65+75.00

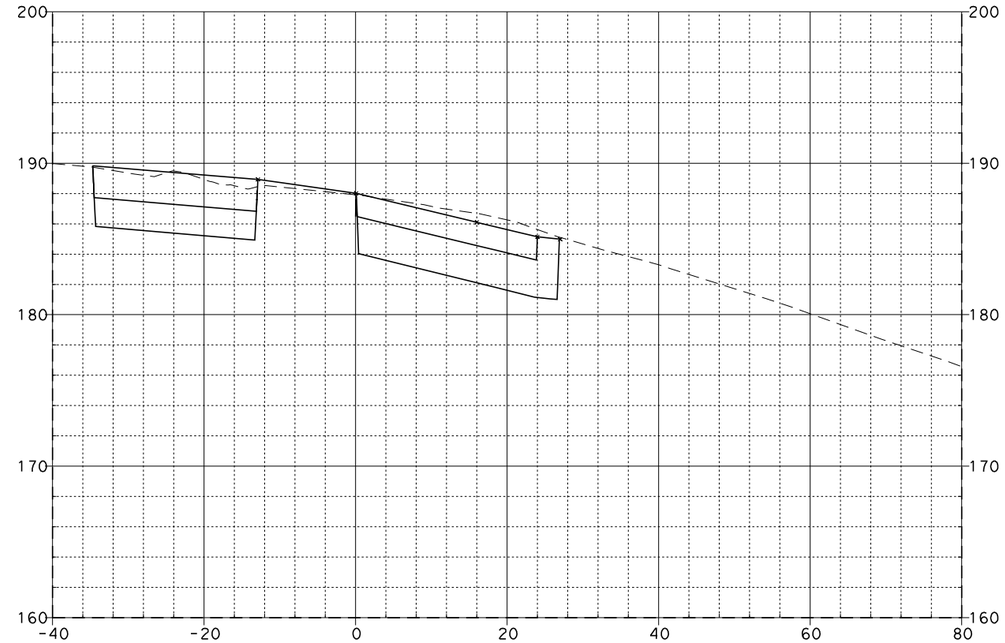

66+25.00

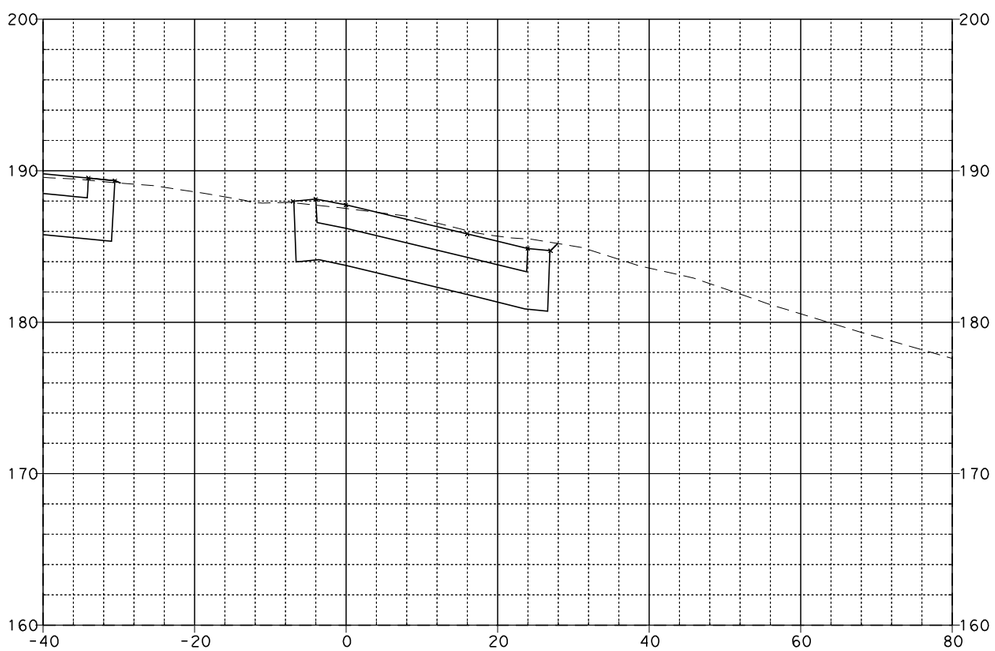

65+50.00

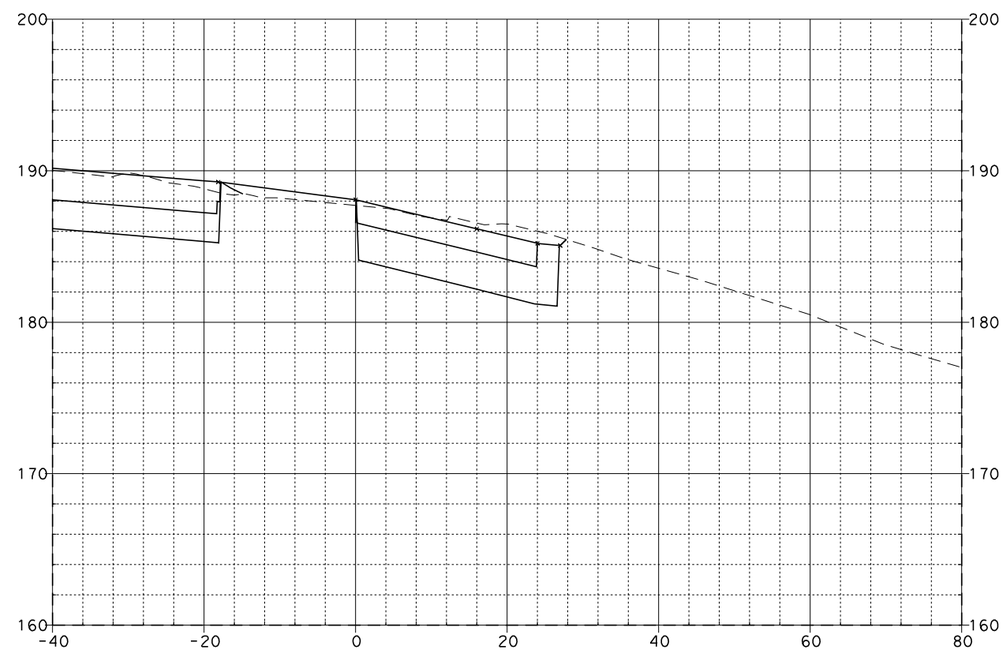

66+00.00

KATELLA LOOP ON-RAMP "C-3"

EA 0F0401

SCALE: Horiz 1"=20'
Vert 1"=10'

08\03\11

Dist	COUNTY	ROUTE	POST MILES TOTAL PROJECT	SHEET No.	TOTAL SHEETS
12	Ora	57	12.2/15.2		

FOR EARTHWORK DEVELOPMENT ONLY

...\d0282599\Cross_Sections.dgn

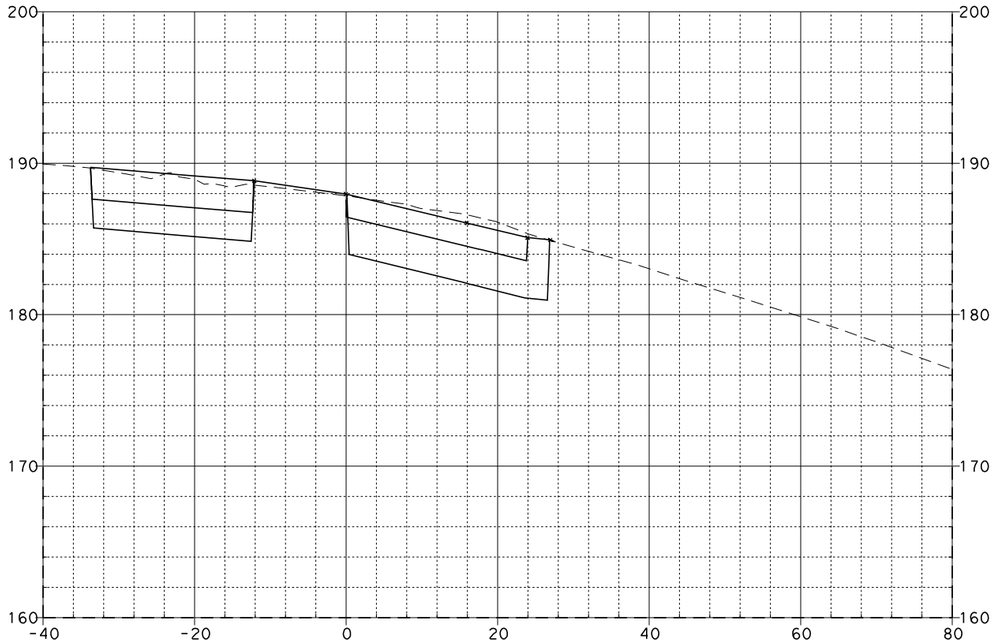

66+32.42

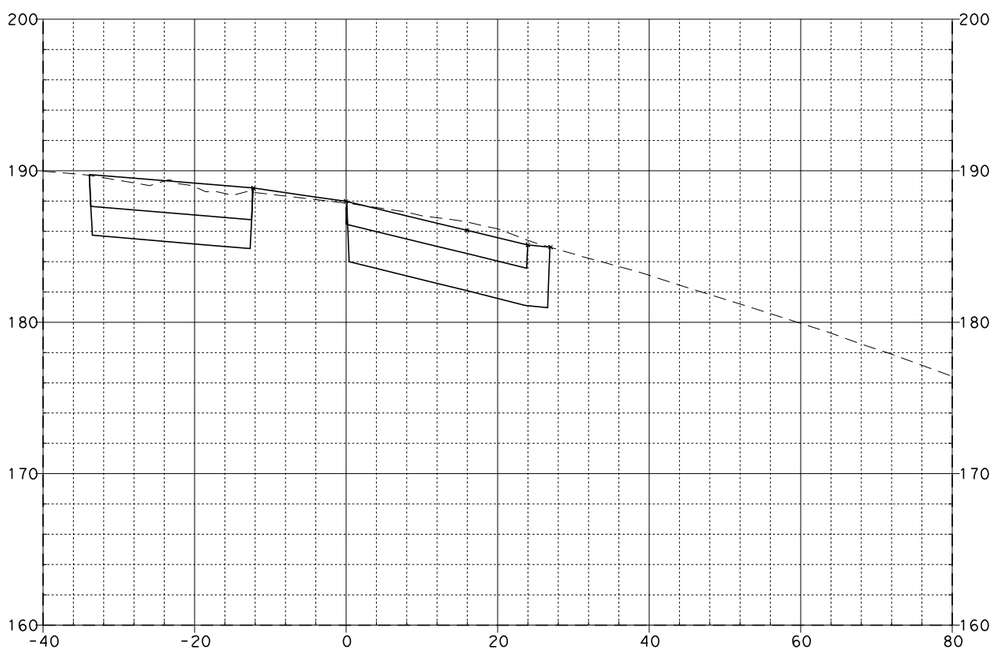

66+30.93

KATELLA LOOP ON-RAMP "C-3"

EA 0F0401

SCALE: Horiz 1"=20'
Vert 1"=10'

08\03\11

Dist	COUNTY	ROUTE	POST MILES TOTAL PROJECT	SHEET No.	TOTAL SHEETS
12	Ora	57	12.2/15.2		

FOR EARTHWORK DEVELOPMENT ONLY

...\d0282599\Cross_Sections.dgn

EA 0F0401

SCALE: Horiz 1"=20'
Vert 1"=10'

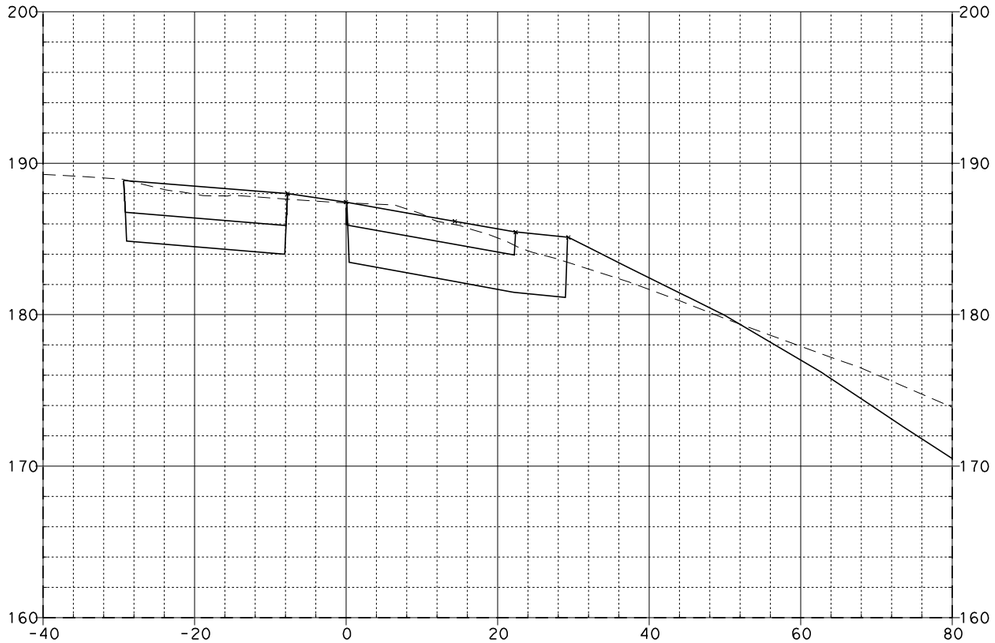

67+00.00

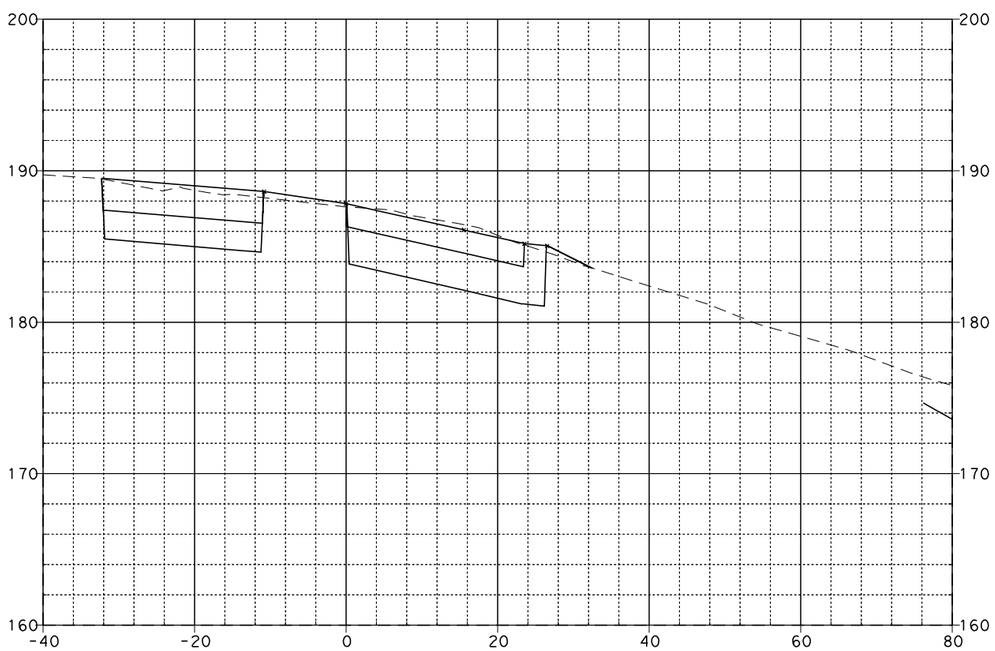

66+50.00

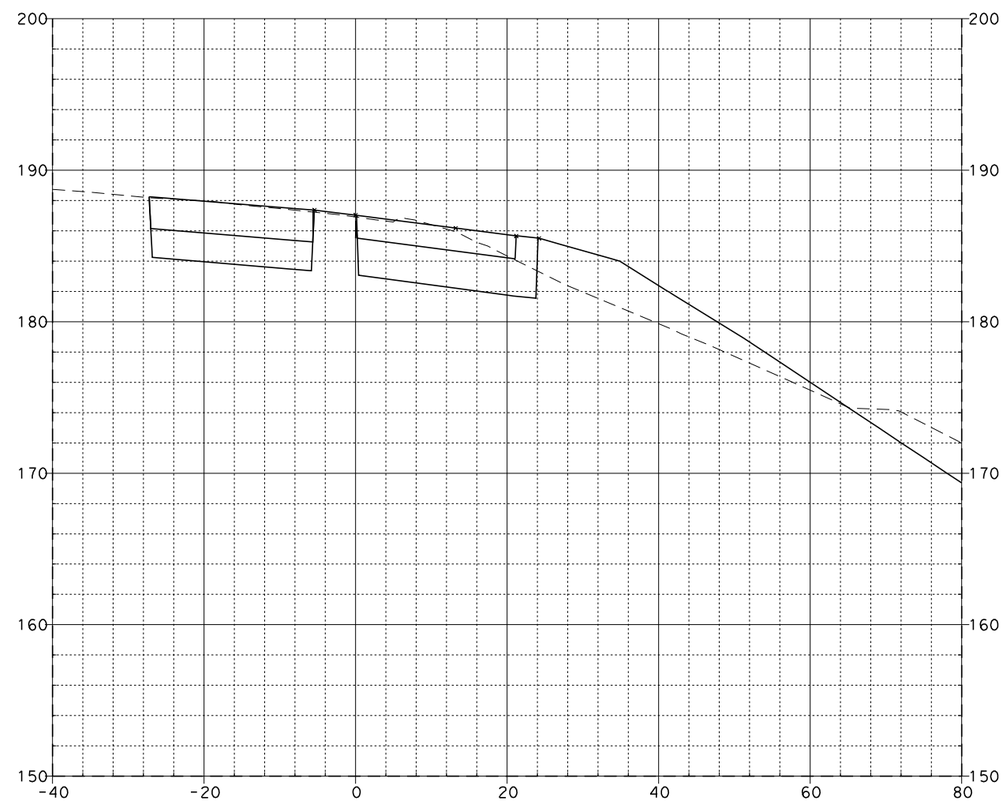

67+50.00

KATELLA LOOP ON-RAMP "C-3"

08\03\11

Dist	COUNTY	ROUTE	POST MILES TOTAL PROJECT	SHEET No.	TOTAL SHEETS
12	Ora	57	12.2/15.2		

FOR EARTHWORK DEVELOPMENT ONLY

...\d0282599\Cross_Sections.dgn

EA 0F0401

SCALE: Horiz 1"=20'
Vert 1"=10'

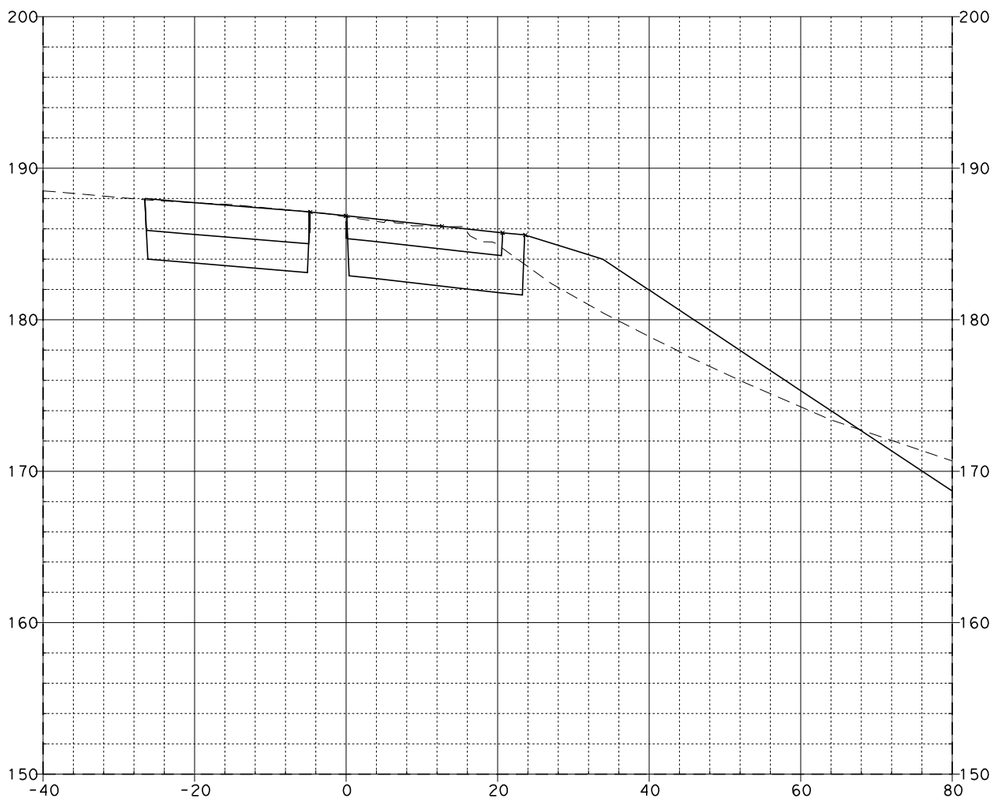

67+71.96

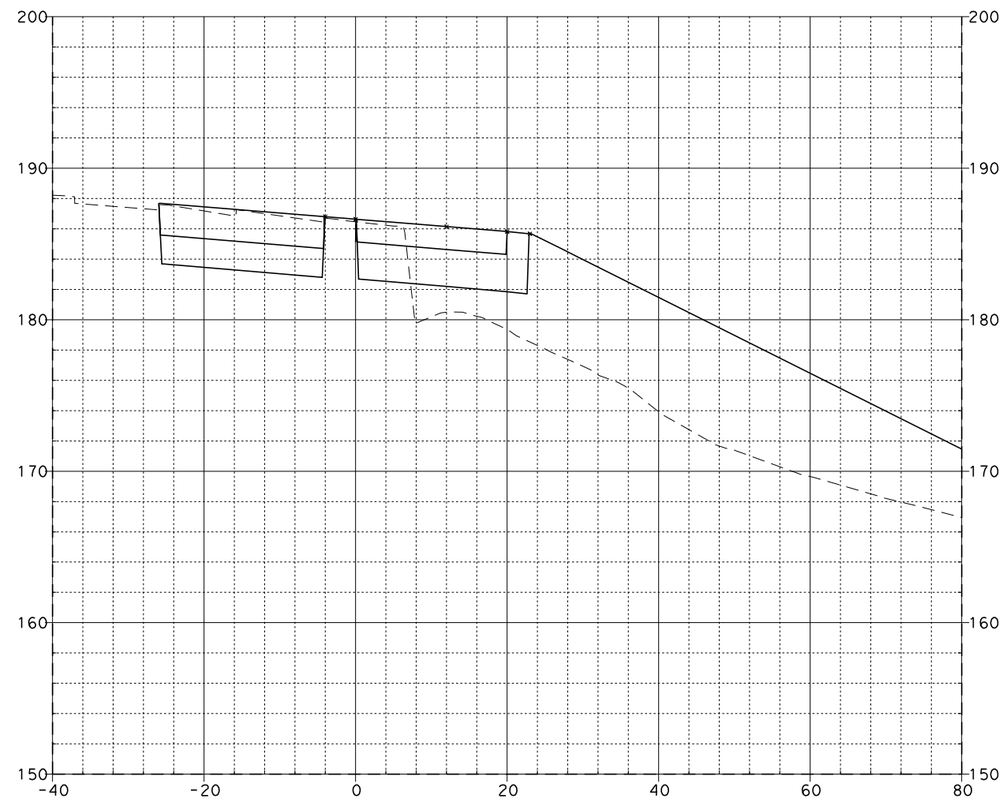

68+00.00

KATELLA LOOP ON-RAMP "C-3"

08\03\11

Dist	COUNTY	ROUTE	POST MILES TOTAL PROJECT	SHEET No.	TOTAL SHEETS
12	Ora	57	12.2/15.2		

FOR EARTHWORK DEVELOPMENT ONLY

...\d0282599\Cross_Sections.dgn

EA 0F0401

SCALE: Horiz 1"=20'
Vert 1"=10'

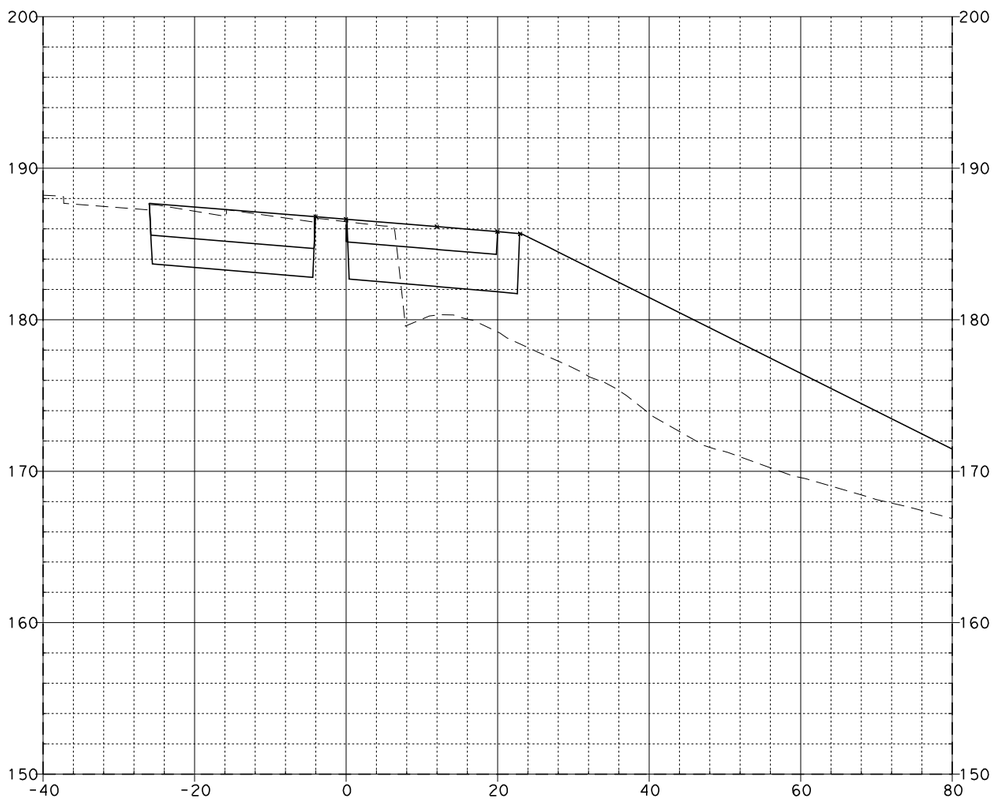

68+00.27

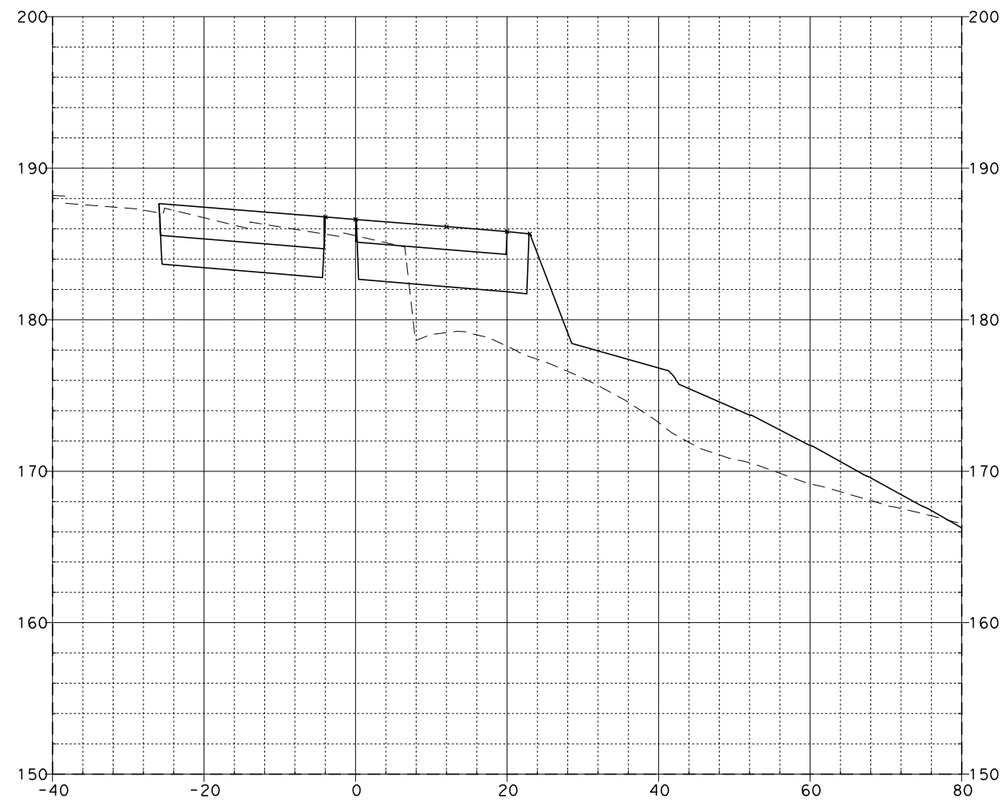

68+01.86

KATELLA LOOP ON-RAMP "C-3"

08\03\11

Dist	COUNTY	ROUTE	POST MILES TOTAL PROJECT	SHEET No.	TOTAL SHEETS
12	Ora	57	12.2/15.2		

FOR EARTHWORK DEVELOPMENT ONLY

...\d0282599\Cross_Sections.dgn

EA 0F0401

SCALE: Horiz 1"=20'
Vert 1"=10'

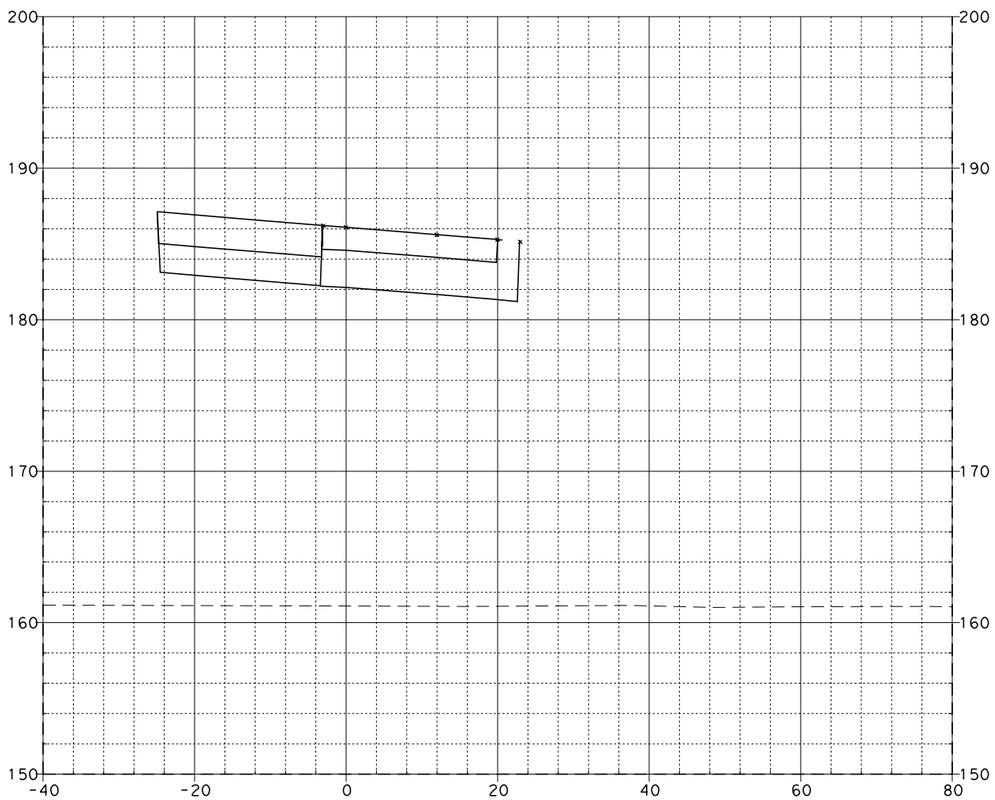

68+50.00

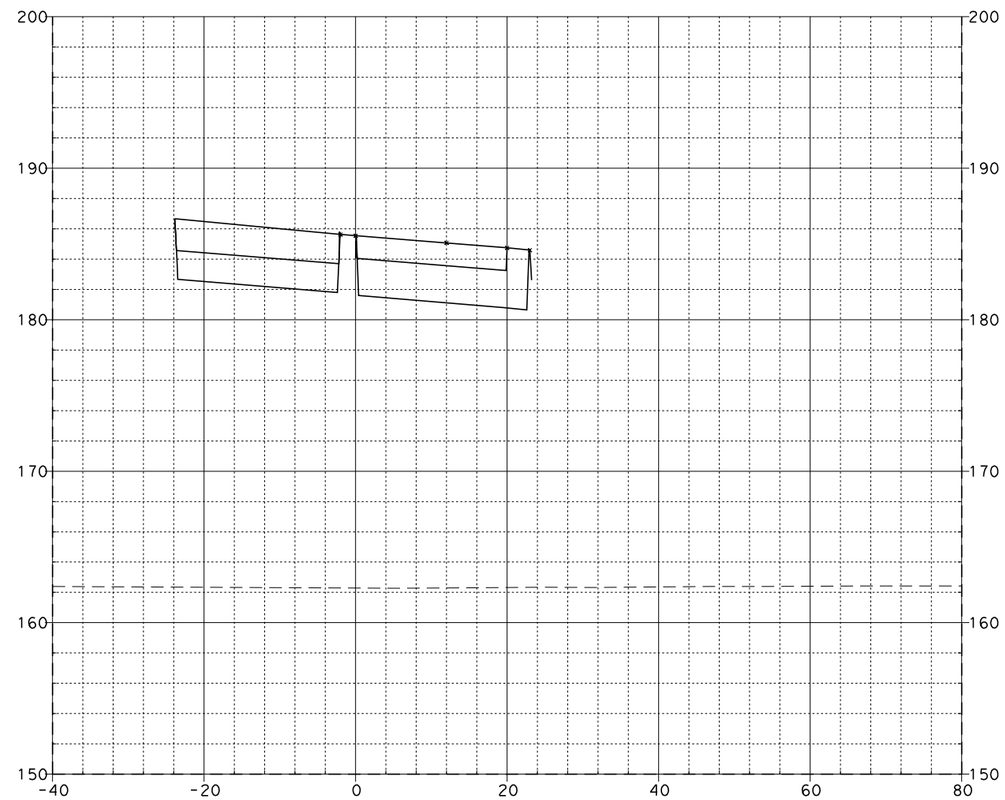

69+00.00

KATELLA LOOP ON-RAMP "C-3"

08\03\11

Dist	COUNTY	ROUTE	POST MILES TOTAL PROJECT	SHEET No.	TOTAL SHEETS
12	Ora	57	12.2/15.2		

FOR EARTHWORK DEVELOPMENT ONLY

...\d0282599\Cross_Sections.dgn

EA 0F0401

SCALE: Horiz 1"=20'
Vert 1"=10'

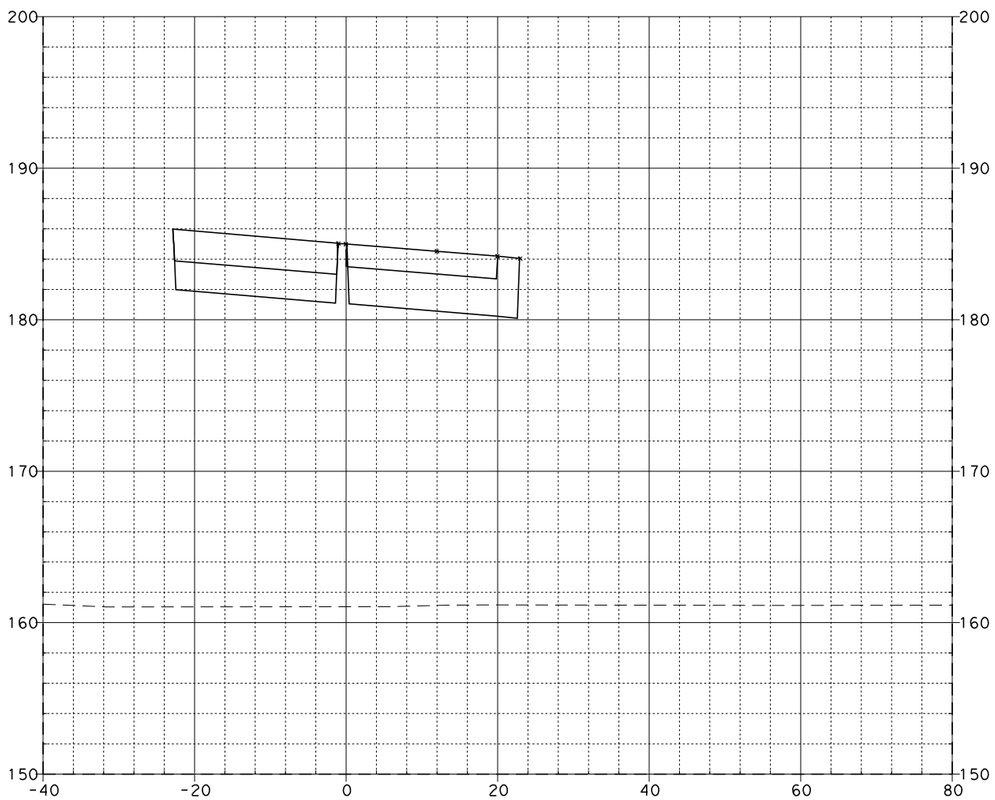

69+50.00

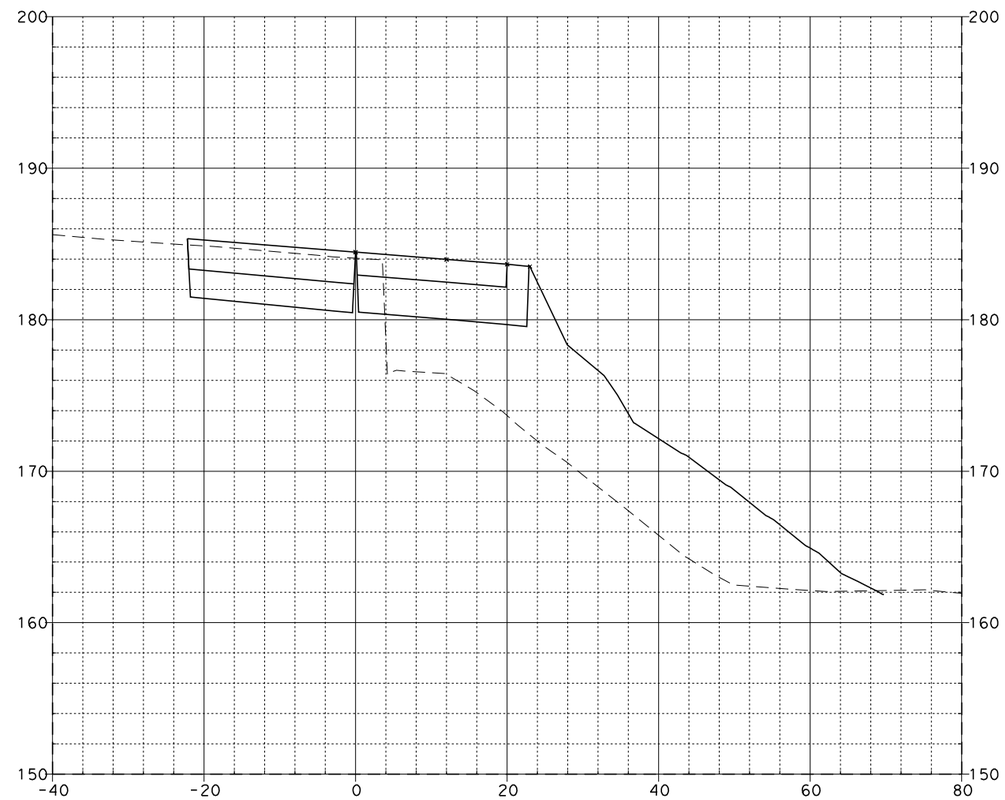

69+99.33

KATELLA LOOP ON-RAMP "C-3"

08\03\11

Dist	COUNTY	ROUTE	POST MILES TOTAL PROJECT	SHEET No.	TOTAL SHEETS
12	Ora	57	12.2/15.2		

FOR EARTHWORK DEVELOPMENT ONLY

...\d0282599\Cross_Sections.dgn

EA 0F0401

SCALE: Horiz 1"=20'
Vert 1"=10'

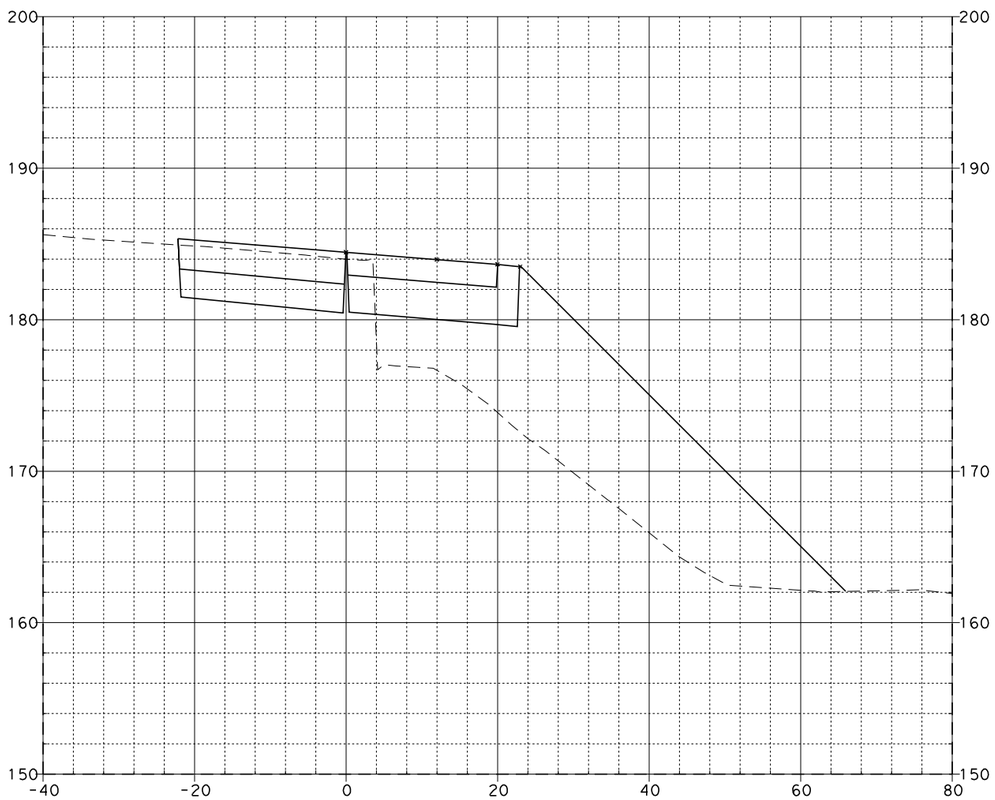

70+00.00

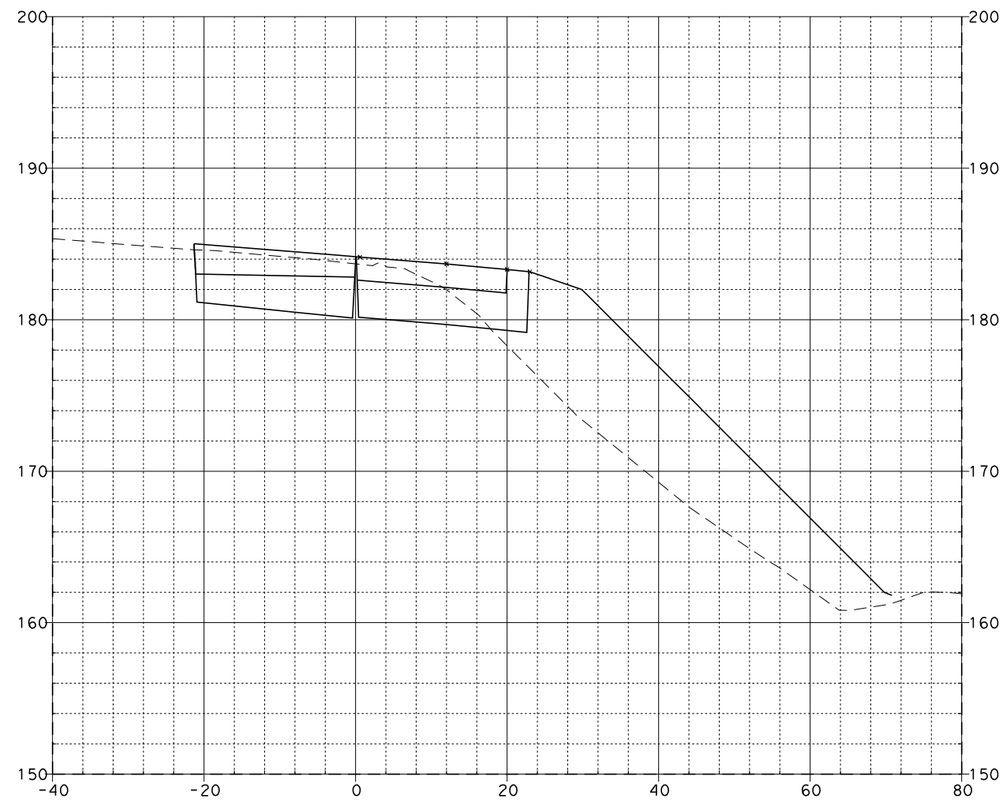

70+29.35

KATELLA LOOP ON-RAMP "C-3"

08\03\11

Dist	COUNTY	ROUTE	POST MILES TOTAL PROJECT	SHEET No.	TOTAL SHEETS
12	Ora	57	12.2/15.2		

FOR EARTHWORK DEVELOPMENT ONLY

...\d0282599\Cross_Sections.dgn

EA 0F0401

SCALE: Horiz 1"=20'
Vert 1"=10'

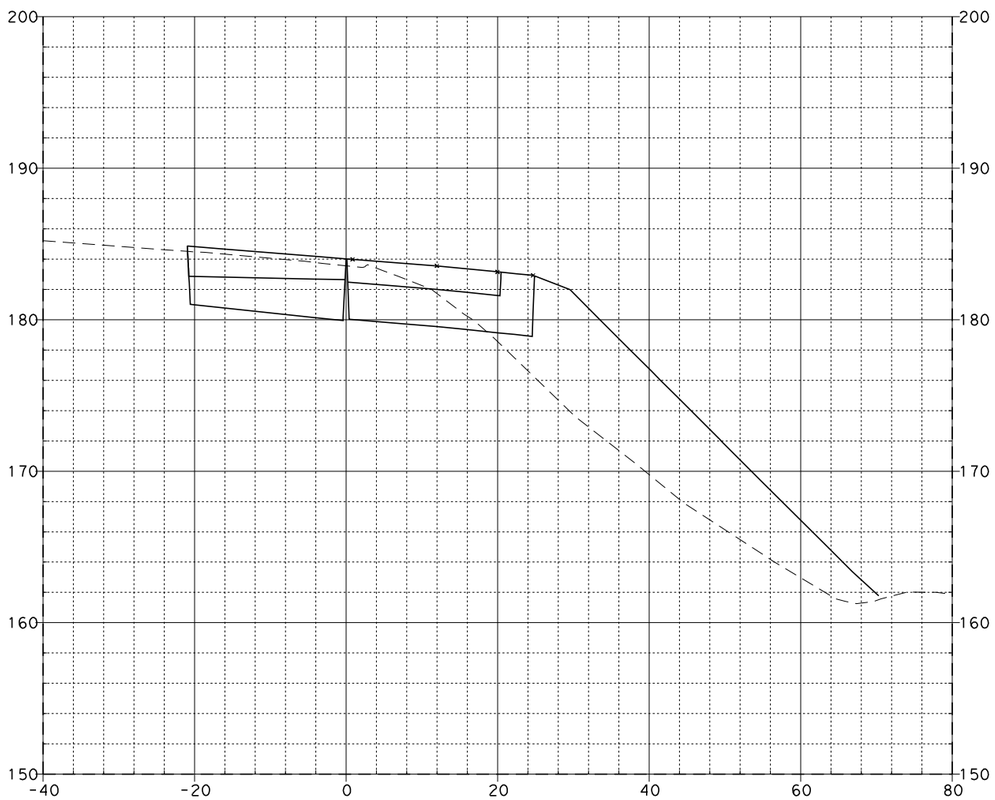

70+43.29

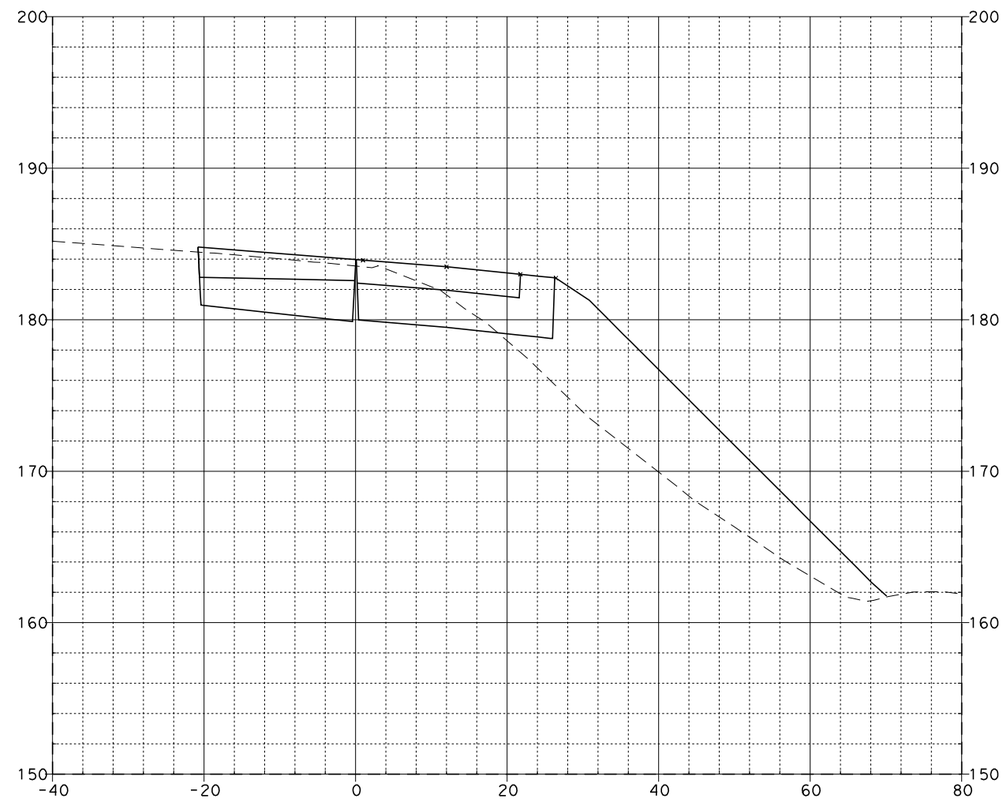

70+49.33

KATELLA LOOP ON-RAMP "C-3"

08\03\11

Dist	COUNTY	ROUTE	POST MILES TOTAL PROJECT	SHEET No.	TOTAL SHEETS
12	Ora	57	12.2/15.2		

FOR EARTHWORK DEVELOPMENT ONLY

...\d0282599\Cross_Sections.dgn

EA 0F0401

SCALE: Horiz 1"=20'
Vert 1"=10'

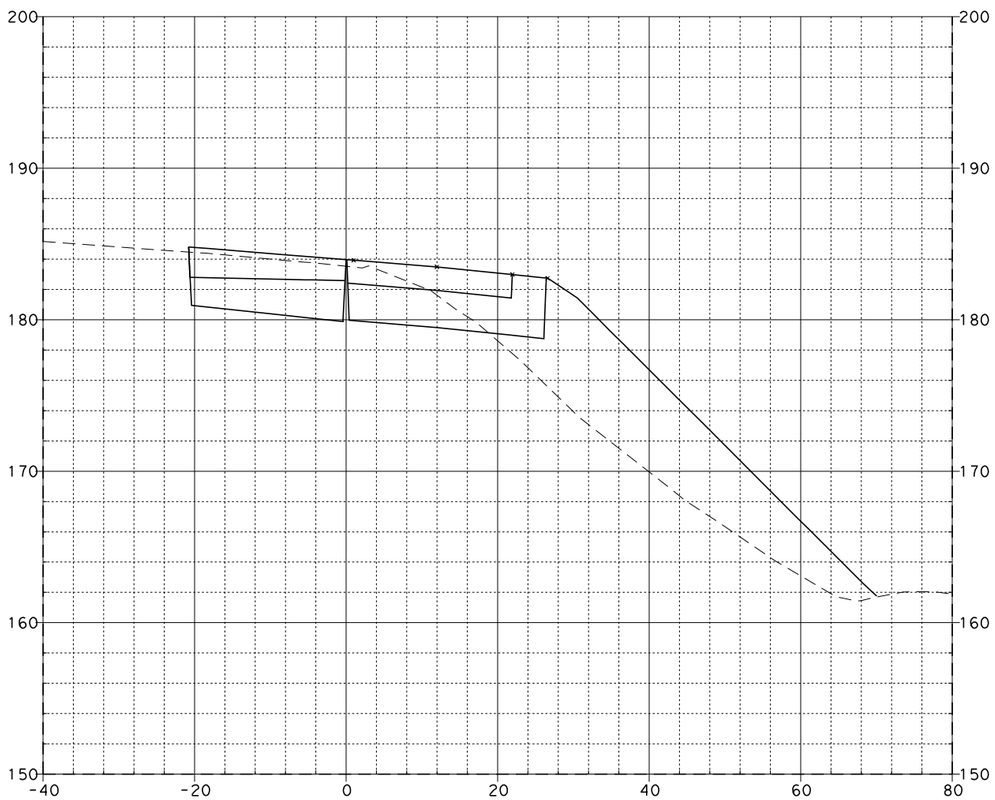

70+50.00

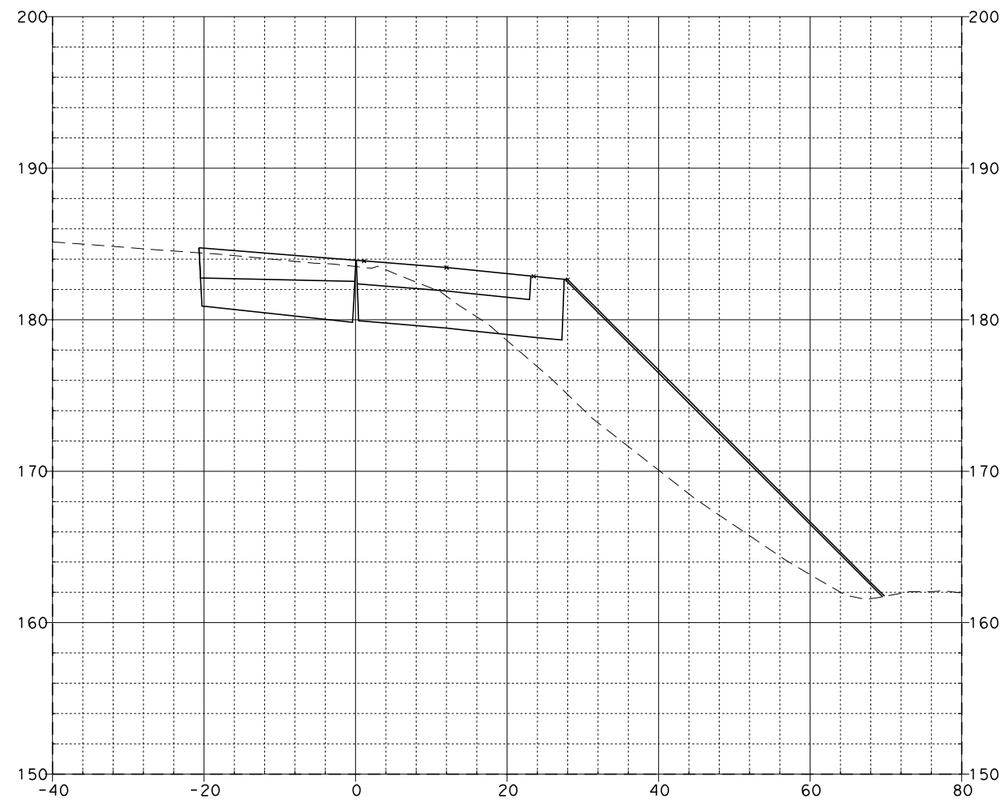

70+55.39

KATELLA LOOP ON-RAMP "C-3"

08\03\11

Dist	COUNTY	ROUTE	POST MILES TOTAL PROJECT	SHEET No.	TOTAL SHEETS
12	Ora	57	12.2/15.2		

FOR EARTHWORK DEVELOPMENT ONLY

...\d0282599\Cross_Sections.dgn

EA 0F0401

SCALE: Horiz 1"=20'
Vert 1"=10'

08\03\11

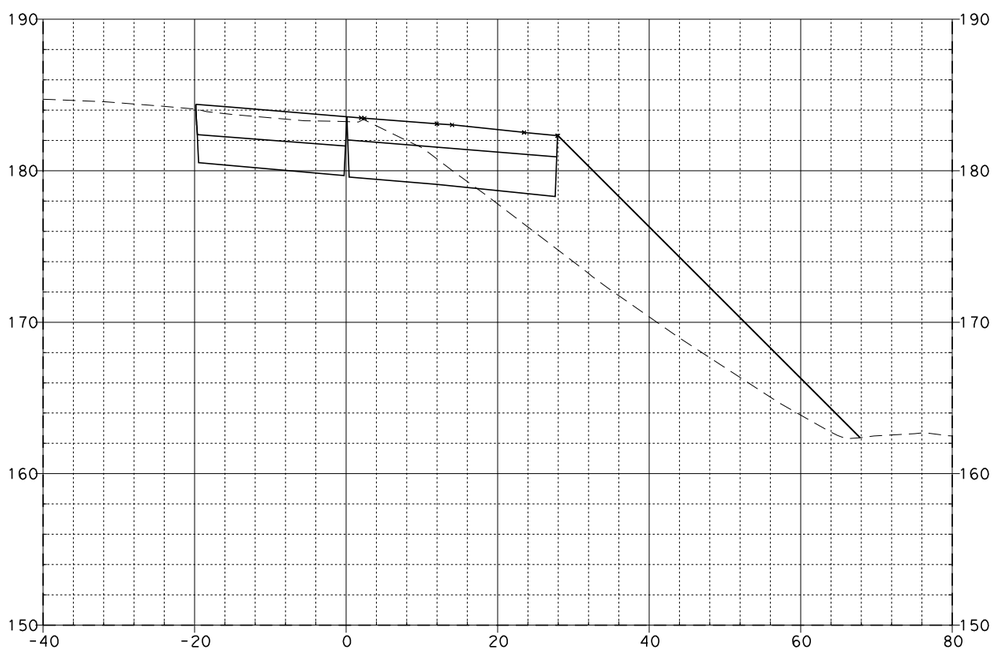

71+00.00

KATELLA LOOP ON-RAMP "C-3"

Dist	COUNTY	ROUTE	POST MILES TOTAL PROJECT	SHEET No.	TOTAL SHEETS
12	Ora	57	12.2/15.2		

FOR EARTHWORK DEVELOPMENT ONLY

...\d0282599\Cross_Sections.dgn

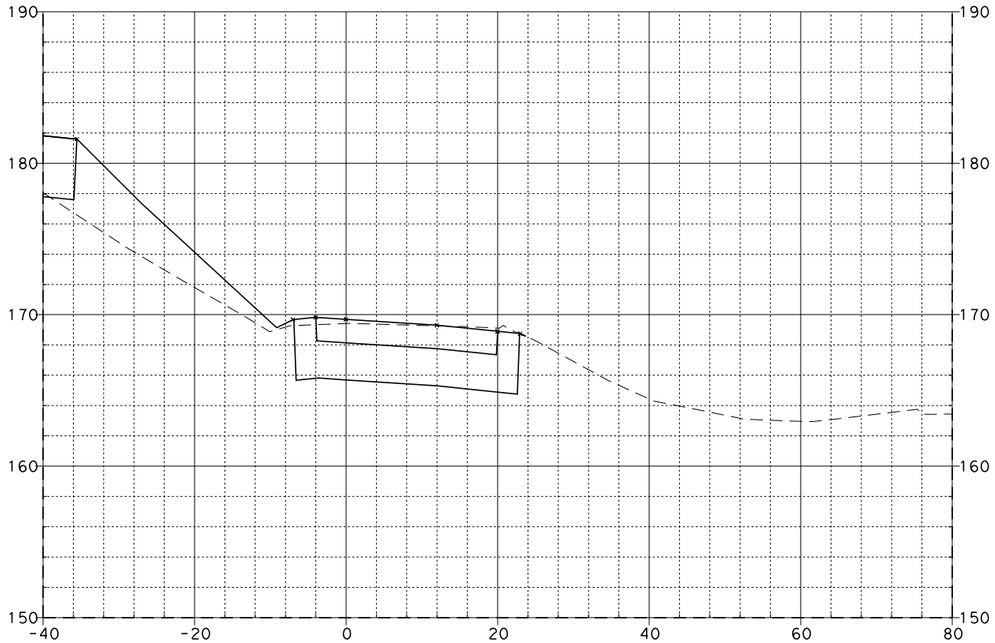

73+00.00

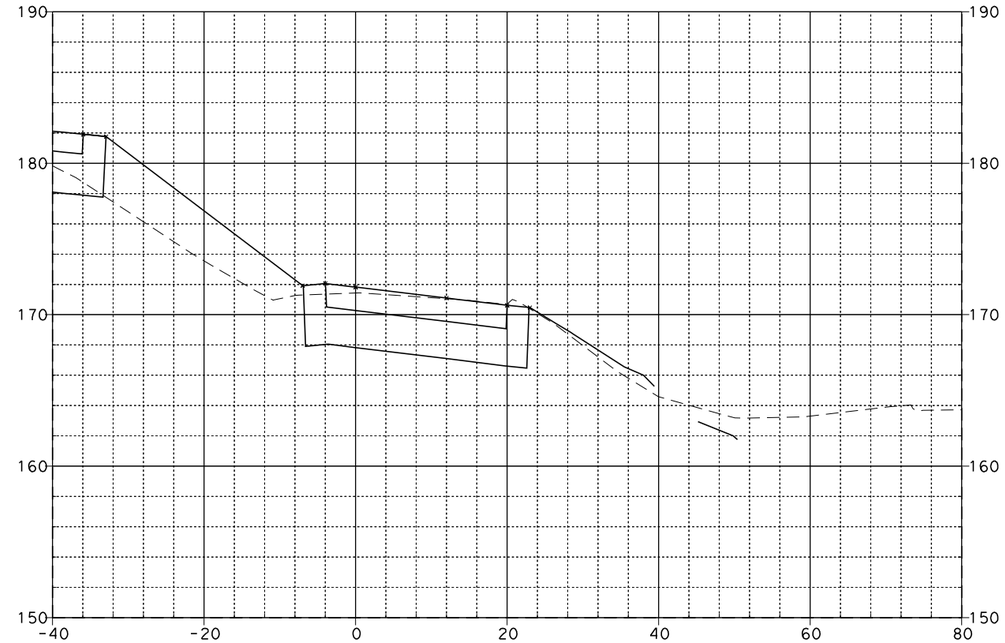

73+45.42

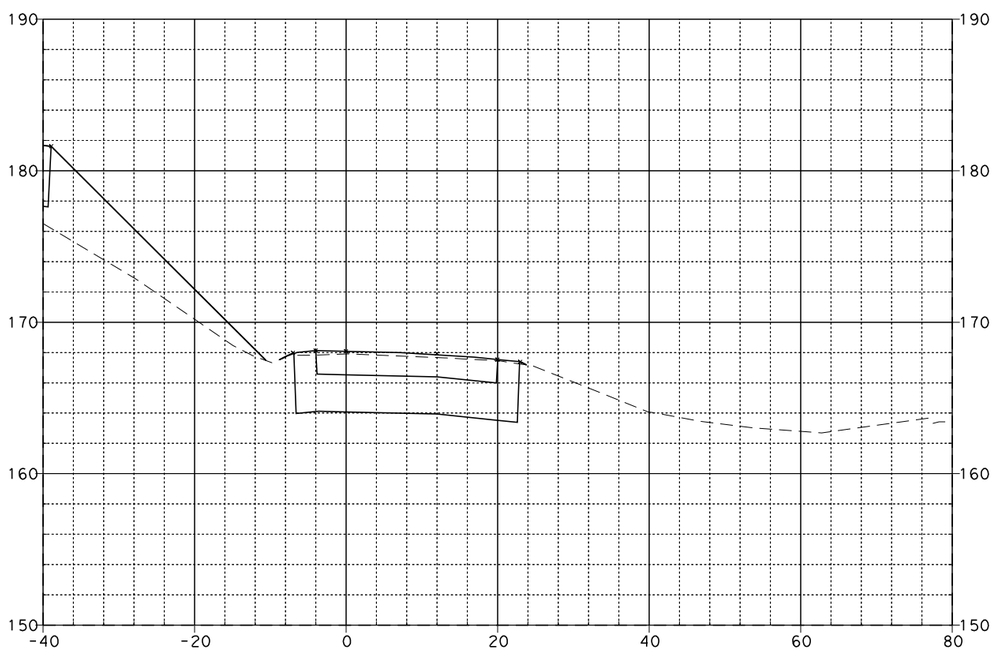

72+65.42

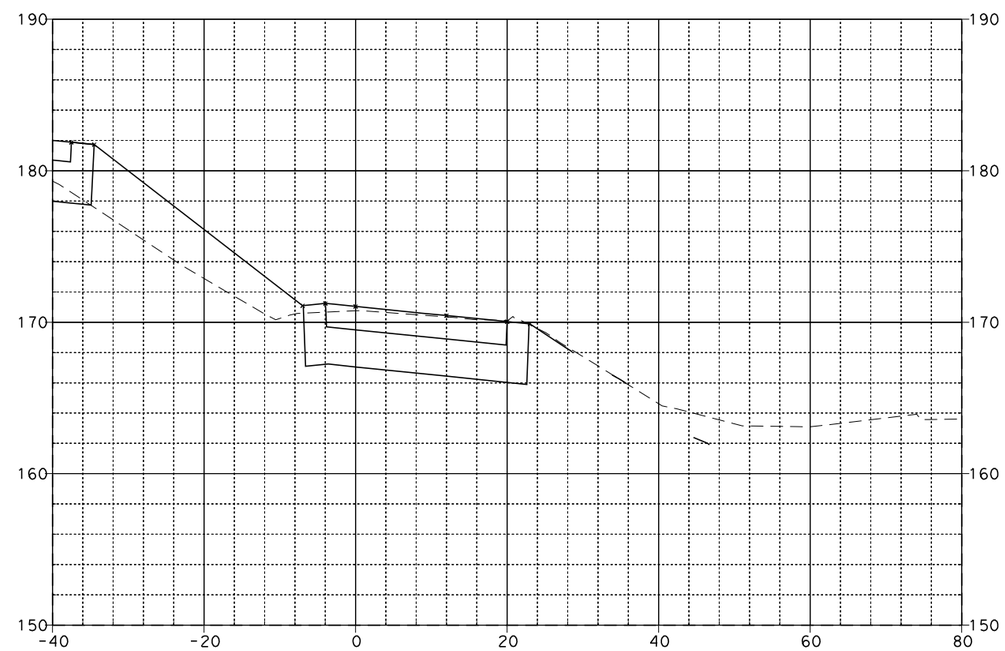

73+28.75

KATELLA ON-RAMP "C-5"

EA 0F0401

SCALE: Horiz 1"=20'
Vert 1"=10'

08\03\11

Dist	COUNTY	ROUTE	POST MILES TOTAL PROJECT	SHEET No.	TOTAL SHEETS
12	Ora	57	12.2/15.2		

FOR EARTHWORK DEVELOPMENT ONLY

...\d0282599\Cross_Sections.dgn

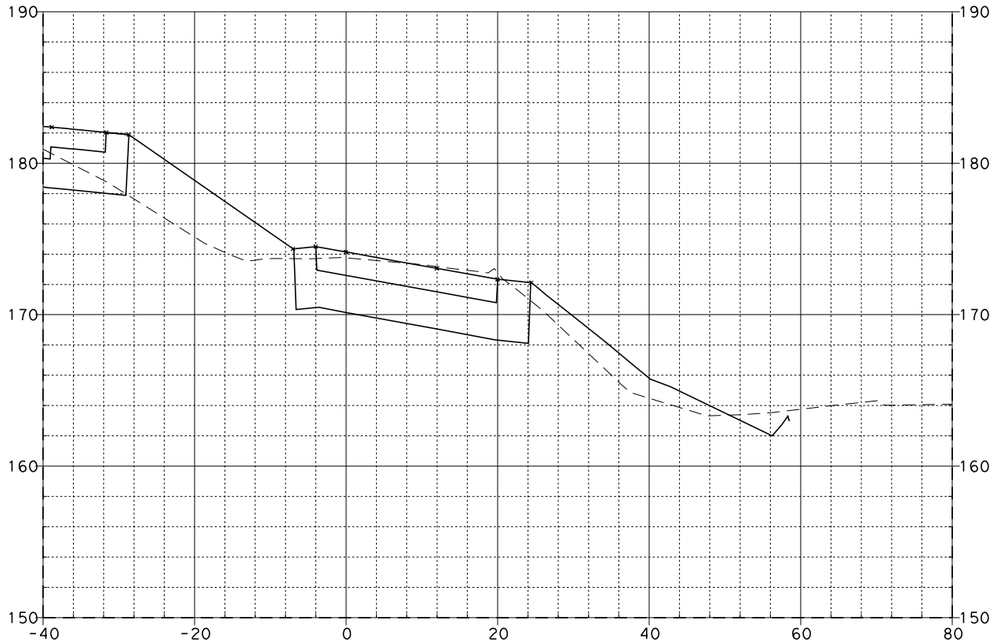

73+95.42

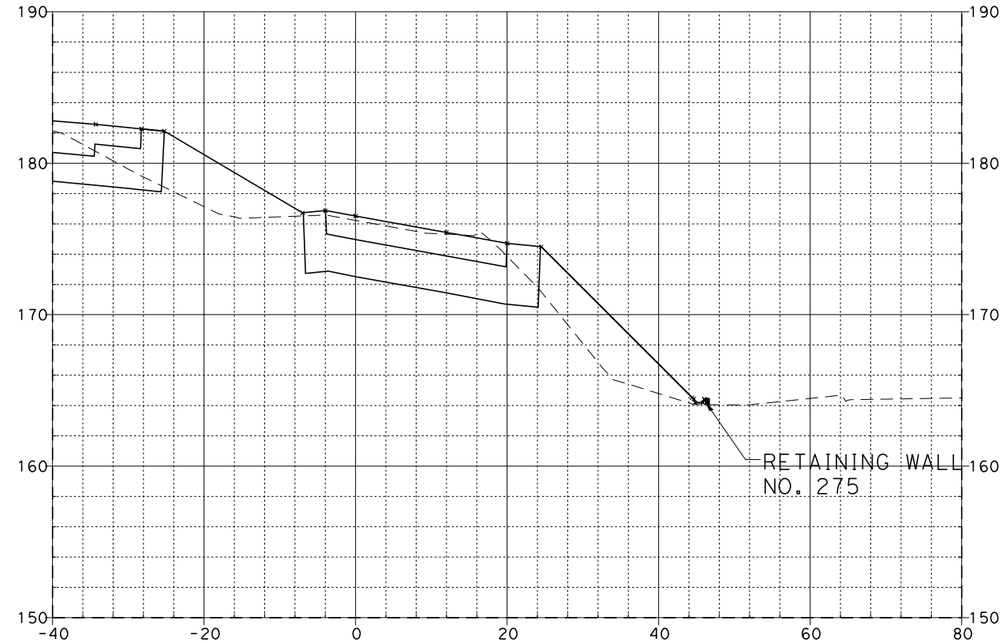

74+50.00

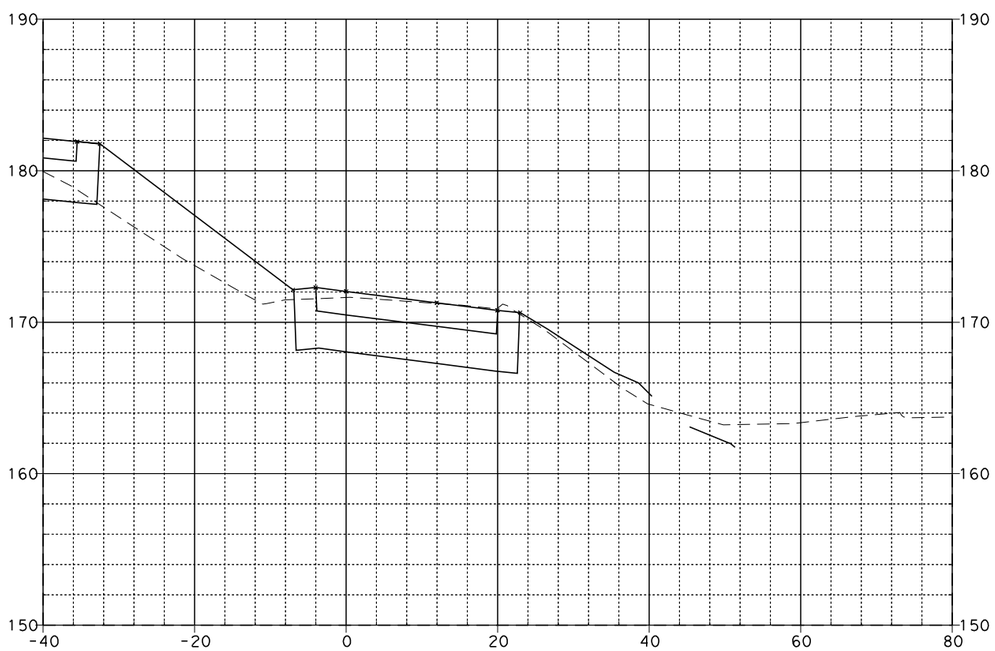

73+50.00

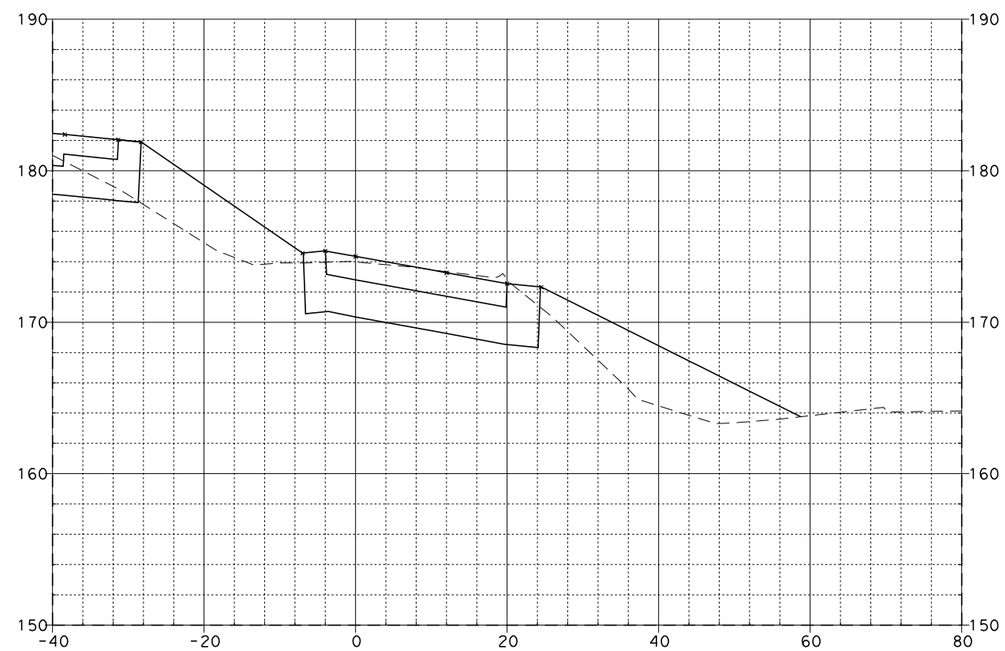

74+00.00

KATELLA ON-RAMP "C-5"

EA 0F0401

SCALE: Horiz 1"=20'
Vert 1"=10'

08\03\11

Dist	COUNTY	ROUTE	POST MILES TOTAL PROJECT	SHEET No.	TOTAL SHEETS
12	Ora	57	12.2/15.2		

FOR EARTHWORK DEVELOPMENT ONLY

...\d0282599\Cross_Sections.dgn

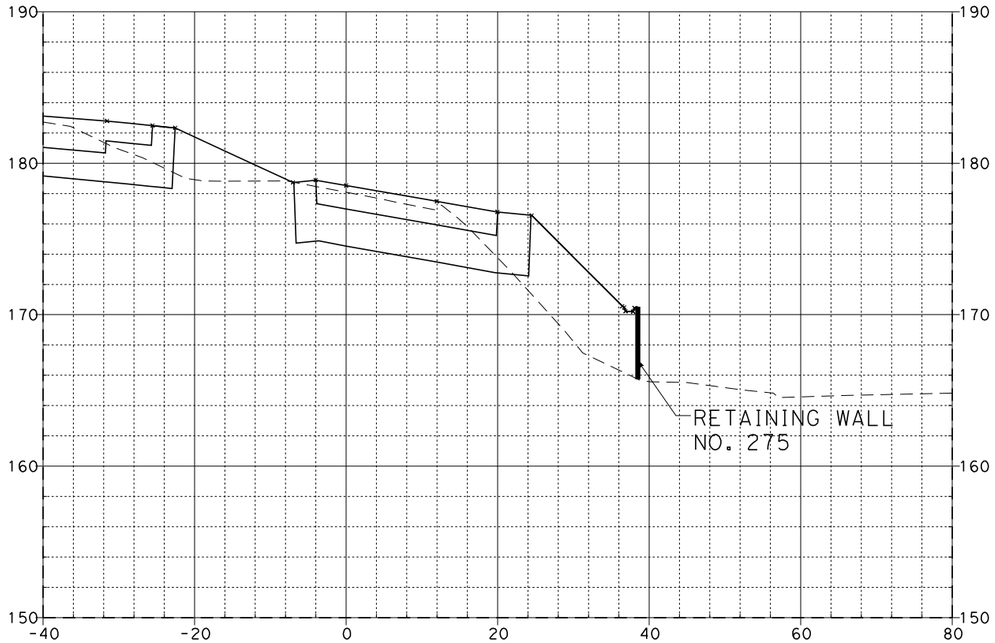

75+00.00

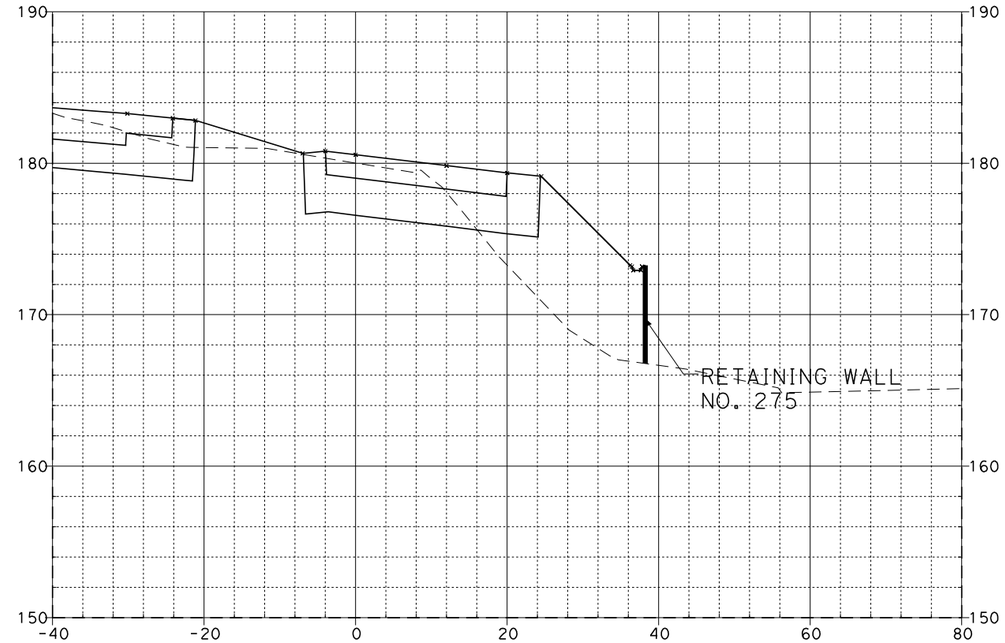

75+54.71

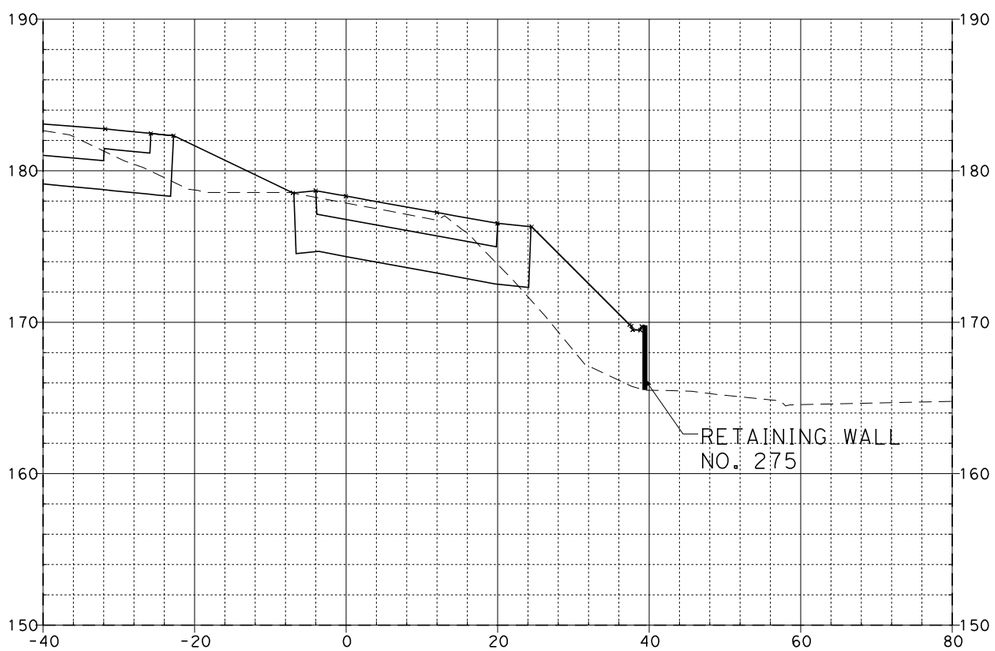

74+94.71

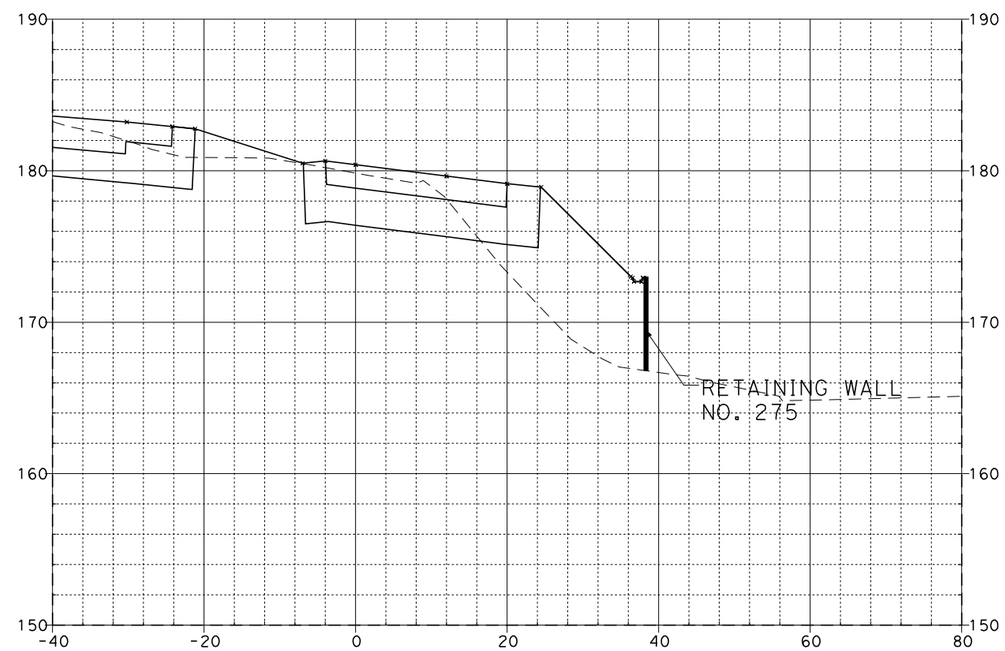

75+50.00

KATELLA ON-RAMP "C-5"

EA 0F0401

SCALE: Horiz 1"=20'
Vert 1"=10'

08\03\11

Dist	COUNTY	ROUTE	POST MILES TOTAL PROJECT	SHEET No.	TOTAL SHEETS
12	Ora	57	12.2/15.2		

FOR EARTHWORK DEVELOPMENT ONLY

...\d0282599\Cross_Sections.dgn

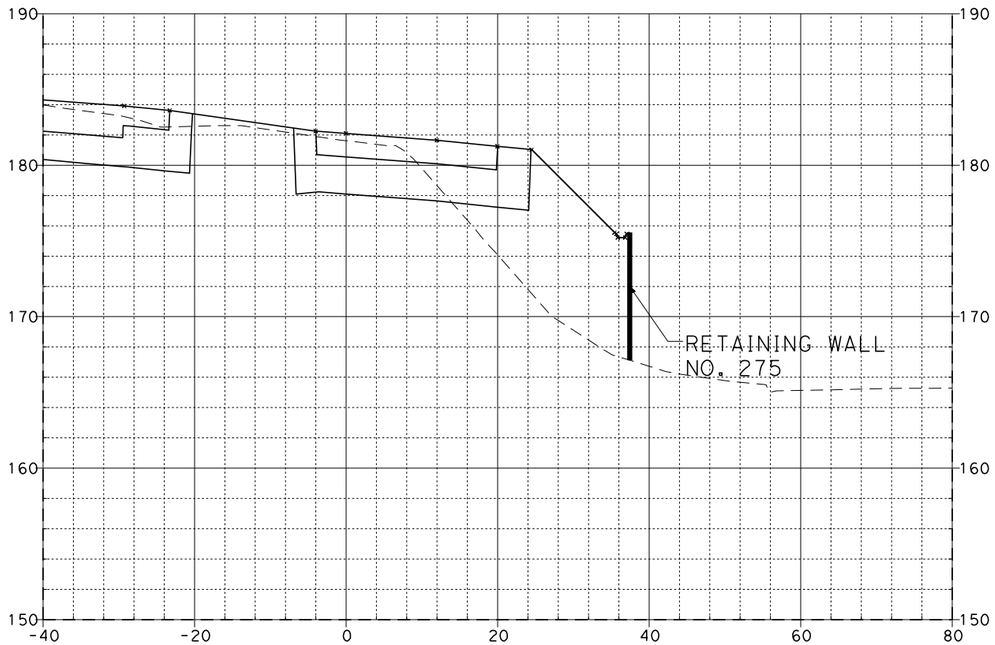

76+00.00

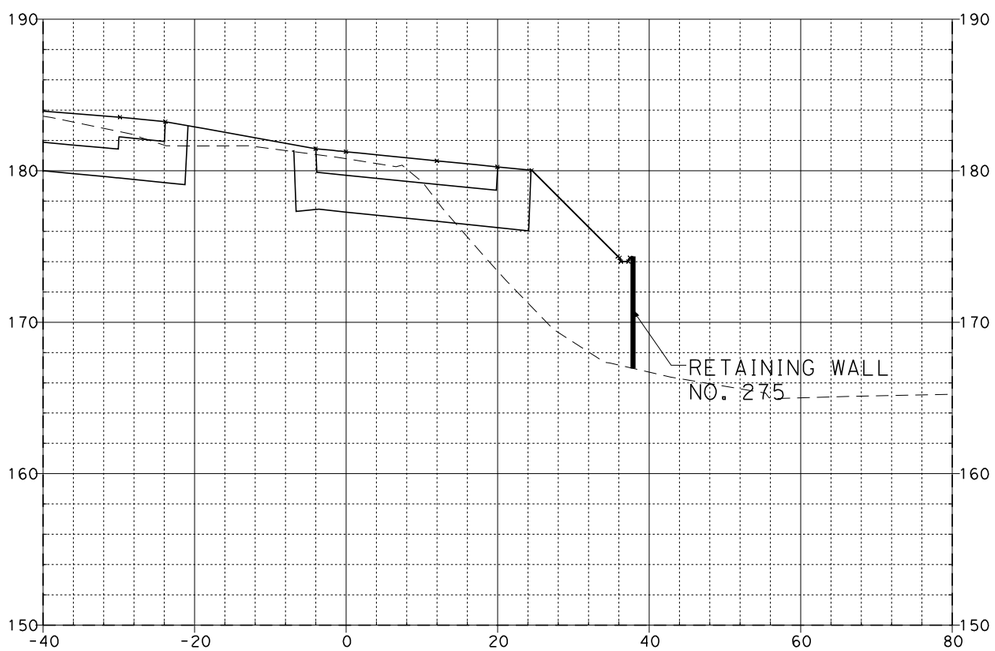

75+74.71

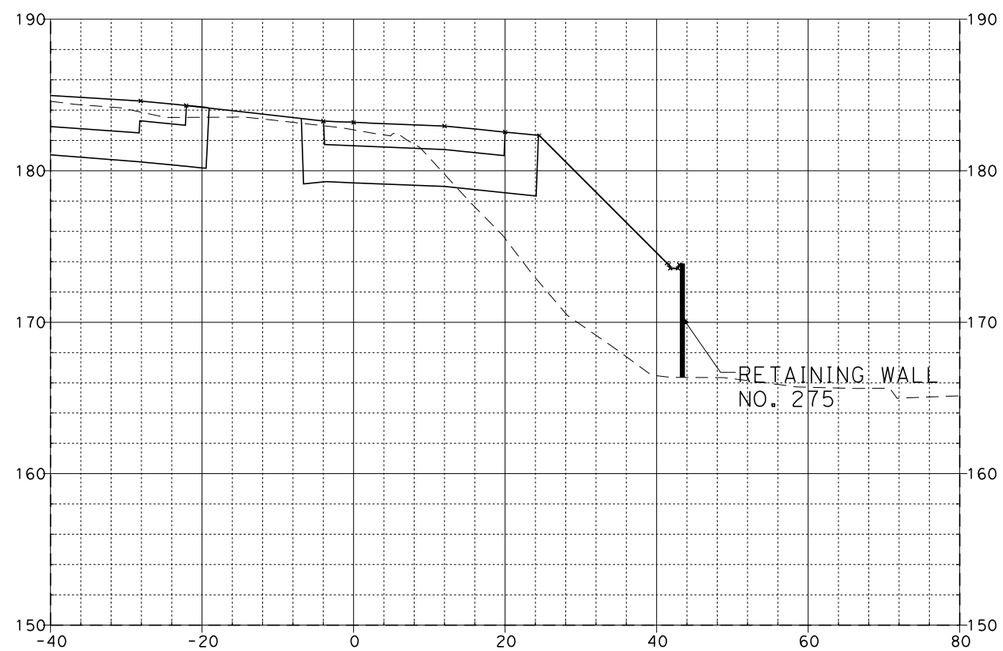

76+34.71

KATELLA ON-RAMP "C-5"

EA 0F0401

SCALE: Horiz 1"=20'
Vert 1"=10'

08\03\11

Dist	COUNTY	ROUTE	POST MILES TOTAL PROJECT	SHEET No.	TOTAL SHEETS
12	Ora	57	12.2/15.2		

FOR EARTHWORK DEVELOPMENT ONLY

...\d0282599\Cross_Sections.dgn

EA 0F0401

SCALE: Horiz 1"=20'
Vert 1"=10'

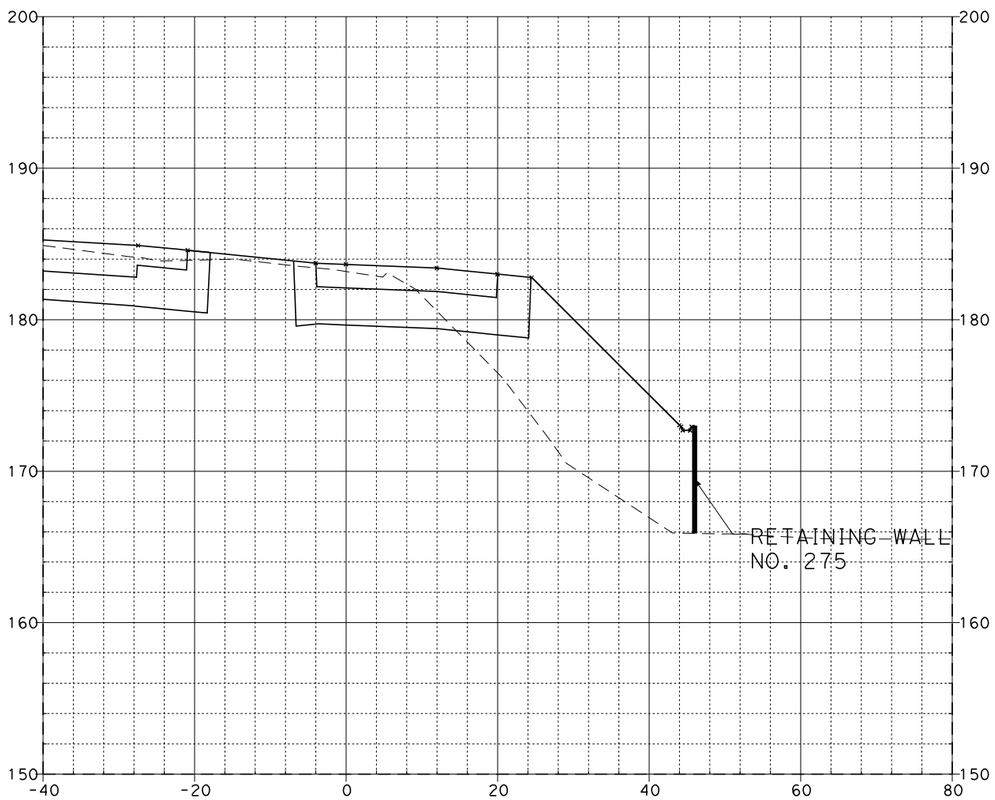

76+50.00

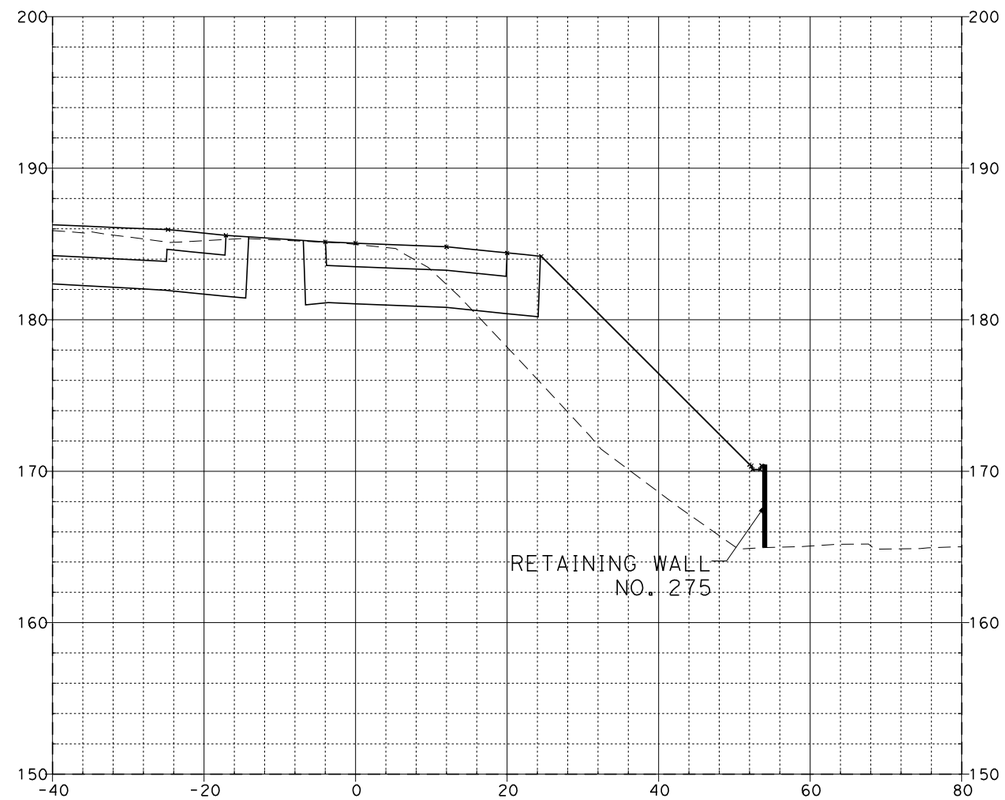

77+00.00

KATELLA ON-RAMP "C-5"

08\03\11

Dist	COUNTY	ROUTE	POST MILES TOTAL PROJECT	SHEET No.	TOTAL SHEETS
12	Ora	57	12.2/15.2		

FOR EARTHWORK DEVELOPMENT ONLY

...\d0282599\Cross_Sections.dgn

EA 0F0401

SCALE: Horiz 1"=20'
Vert 1"=10'

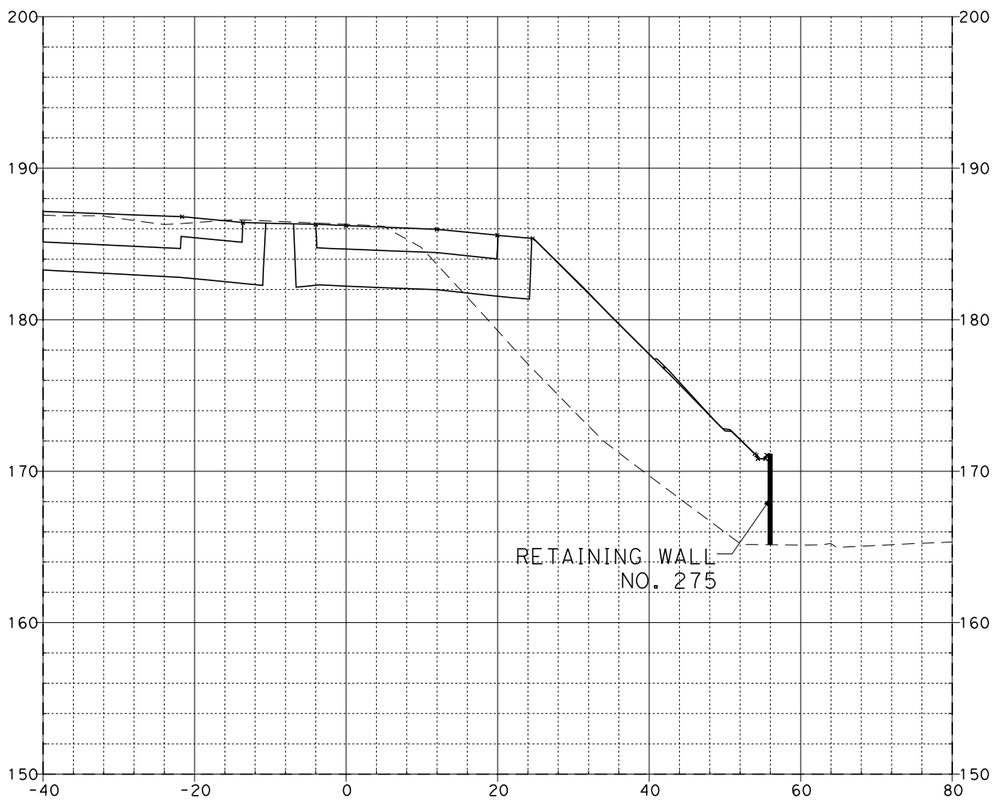

77+46.25

77+50.00

KATELLA ON-RAMP "C-5"

08\03\11

Dist	COUNTY	ROUTE	POST MILES TOTAL PROJECT	SHEET No.	TOTAL SHEETS
12	Ora	57	12.2/15.2		

FOR EARTHWORK DEVELOPMENT ONLY

...\d0282599\Cross_Sections.dgn

EA 0F0401

SCALE: Horiz 1"=20'
Vert 1"=10'

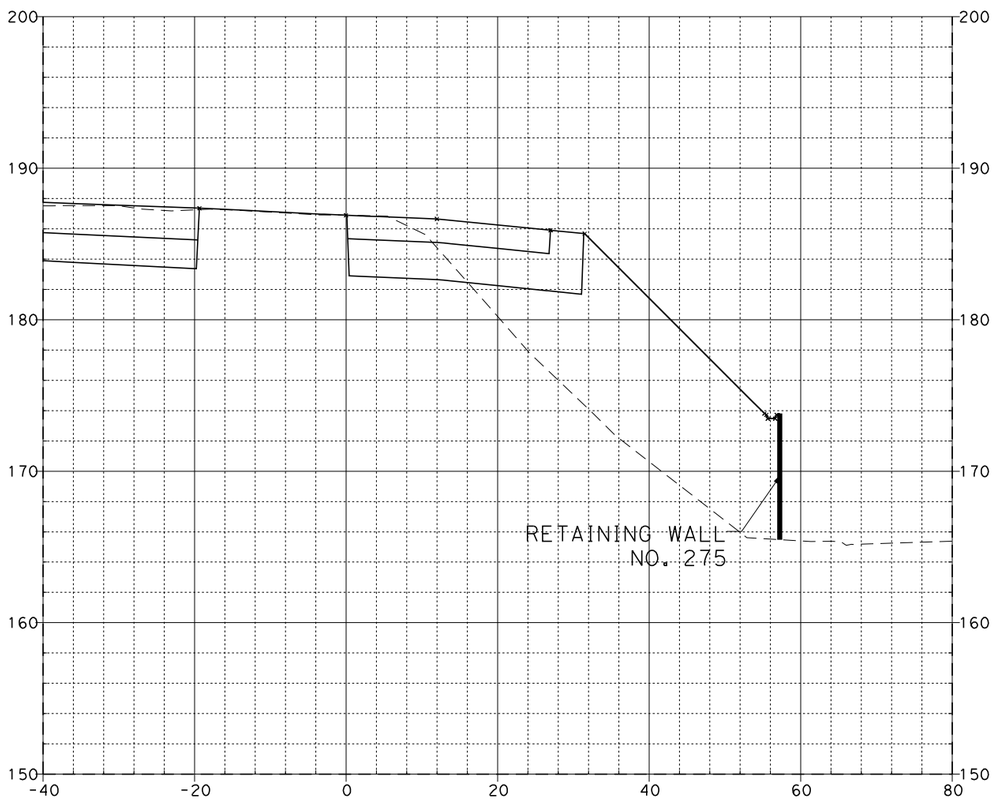

77+76.25

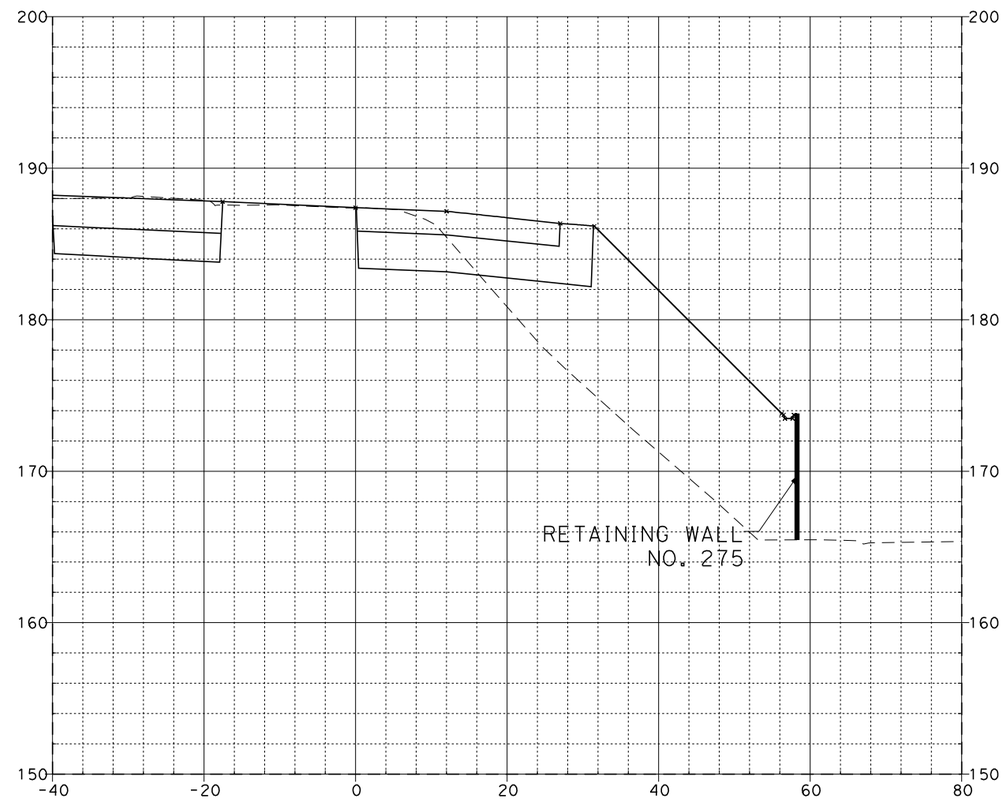

78+00.00

KATELLA ON-RAMP "C-5"

08\03\11

Dist	COUNTY	ROUTE	POST MILES TOTAL PROJECT	SHEET No.	TOTAL SHEETS
12	Ora	57	12.2/15.2		

FOR EARTHWORK DEVELOPMENT ONLY

...\d0282599\Cross_Sections.dgn

EA 0F0401

SCALE: Horiz 1"=20'
Vert 1"=10'

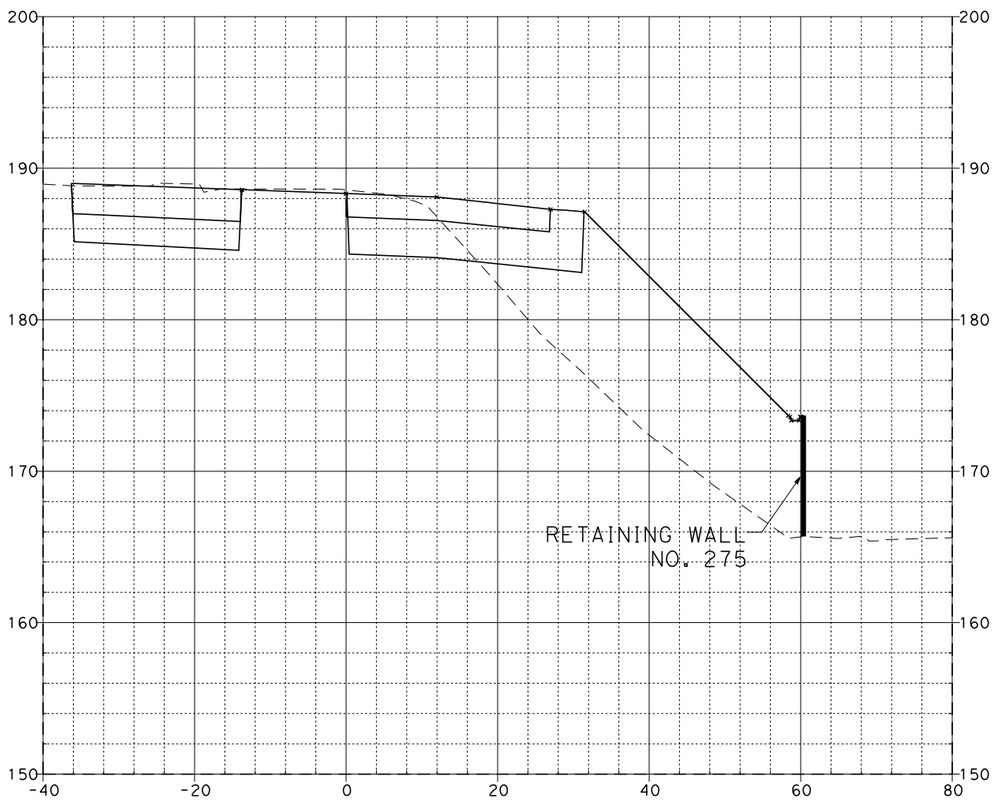

78+50.00

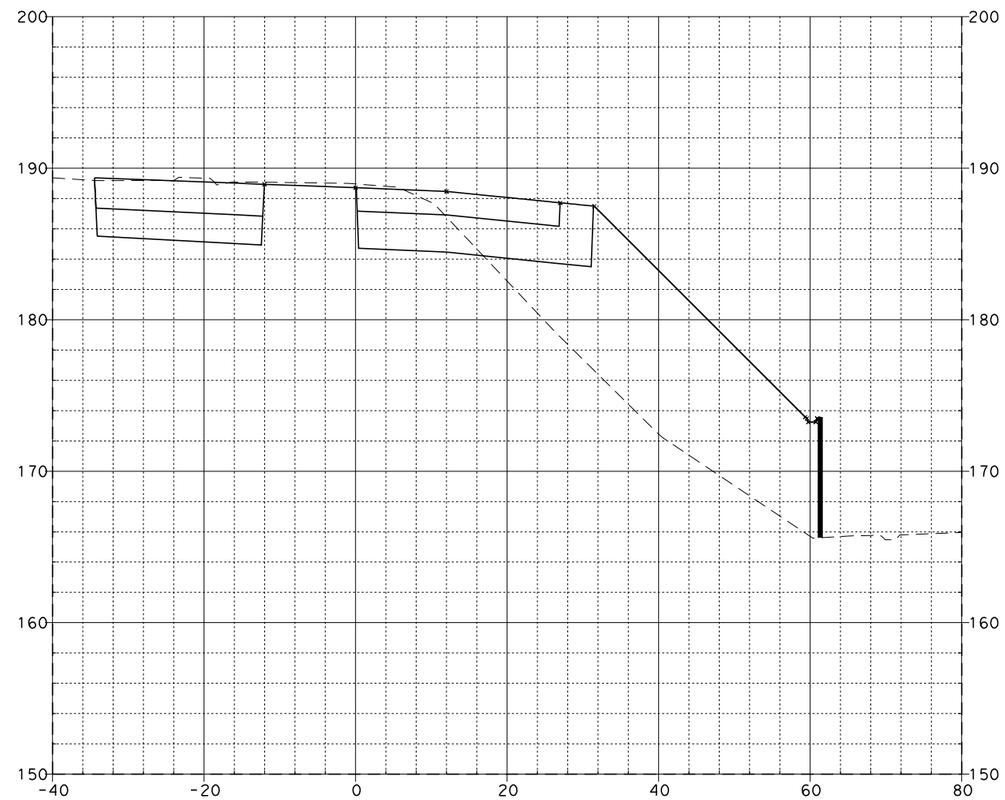

78+72.62

KATELLA ON-RAMP "C-5"

08\03\11

Dist	COUNTY	ROUTE	POST MILES TOTAL PROJECT	SHEET No.	TOTAL SHEETS
12	Ora	57	12.2/15.2		

FOR EARTHWORK DEVELOPMENT ONLY

...\d0282599\Cross_Sections.dgn

EA 0F0401

SCALE: Horiz 1"=20'
Vert 1"=10'

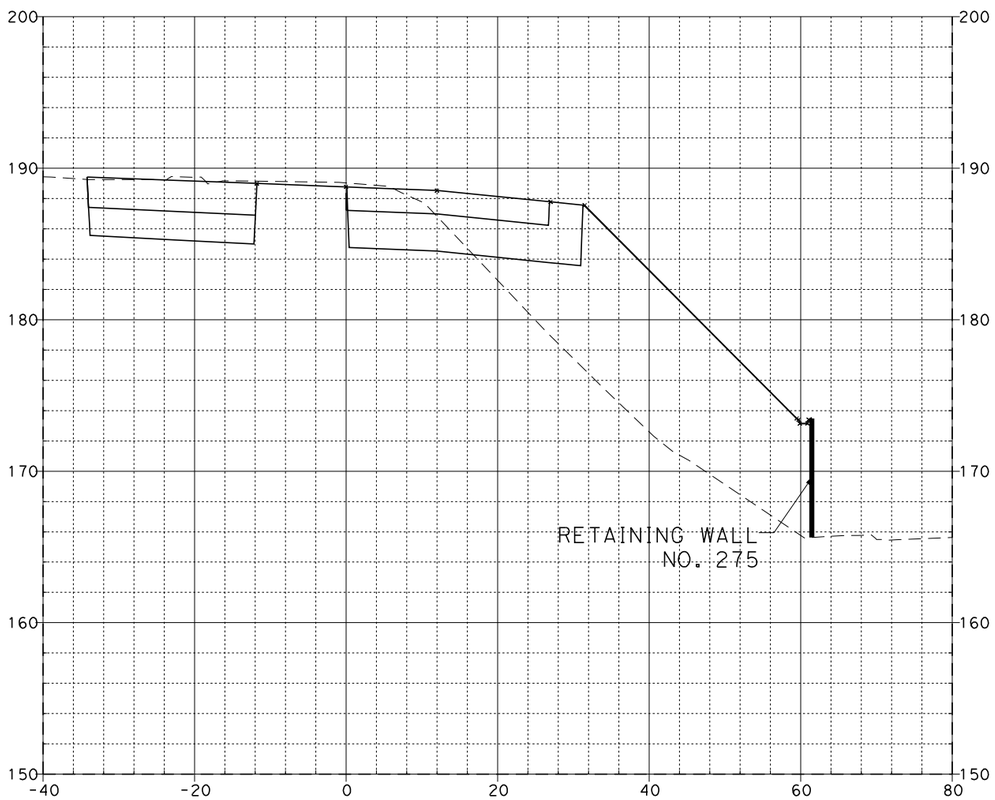

78+76.28

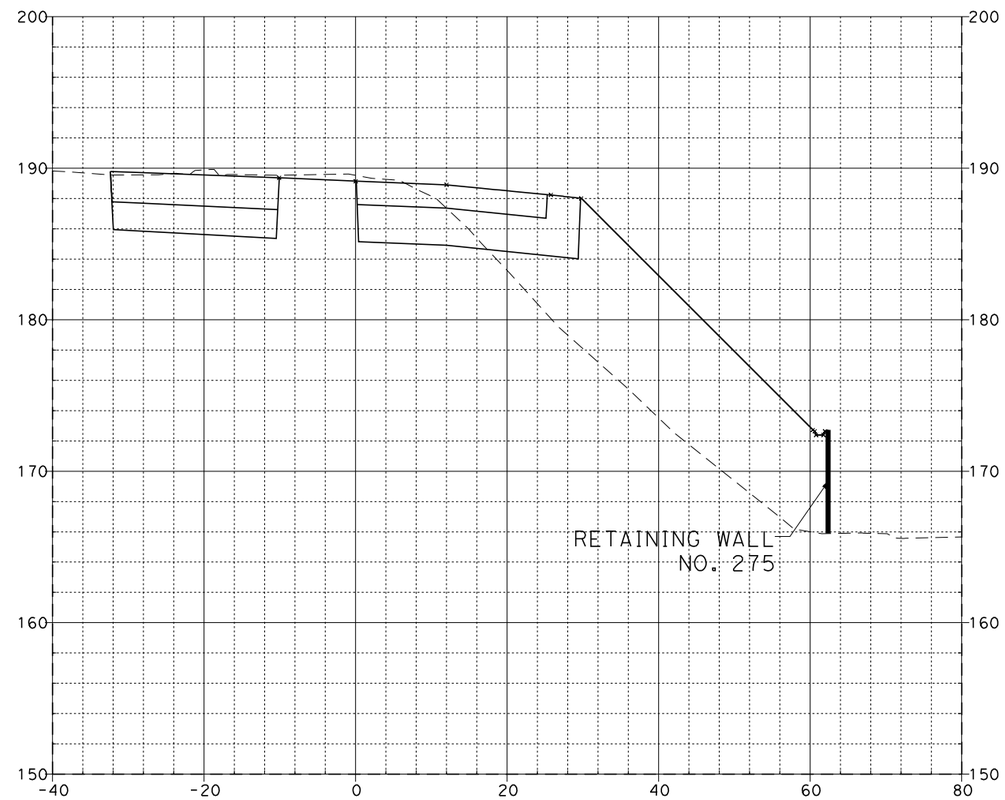

79+00.00

KATELLA ON-RAMP "C-5"

08\03\11

Dist	COUNTY	ROUTE	POST MILES TOTAL PROJECT	SHEET No.	TOTAL SHEETS
12	Ora	57	12.2/15.2		

FOR EARTHWORK DEVELOPMENT ONLY

...\d0282599\Cross_Sections.dgn

EA OF0401

SCALE: Horiz 1"=20'
Vert 1"=10'

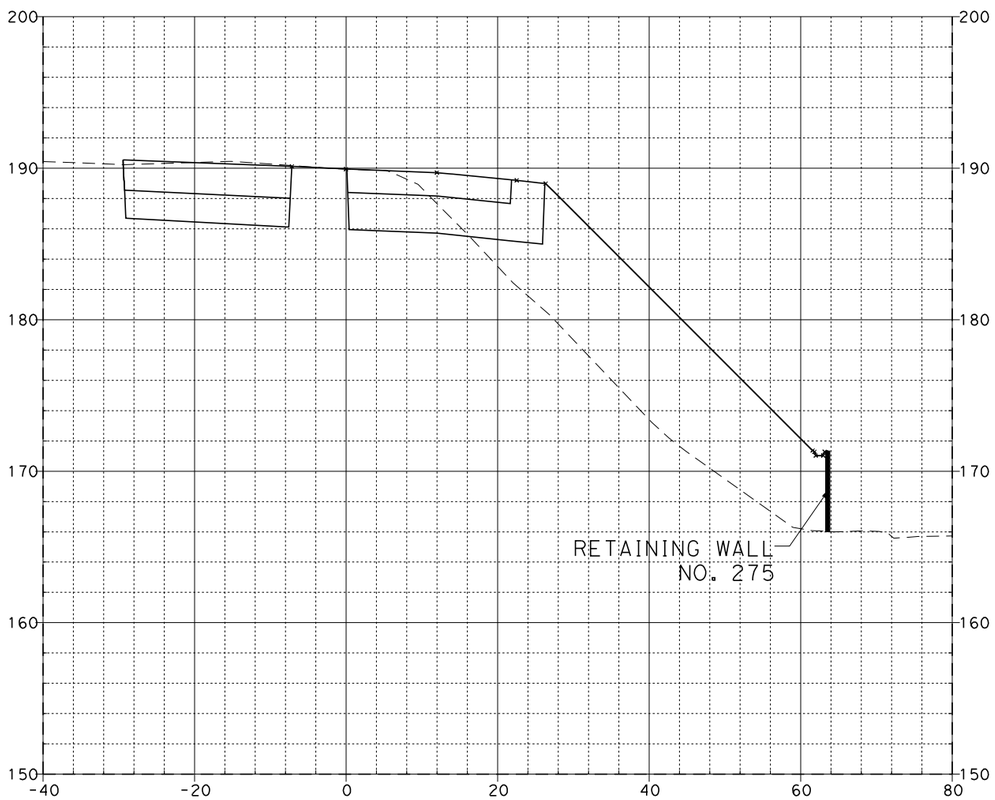

79+50.00

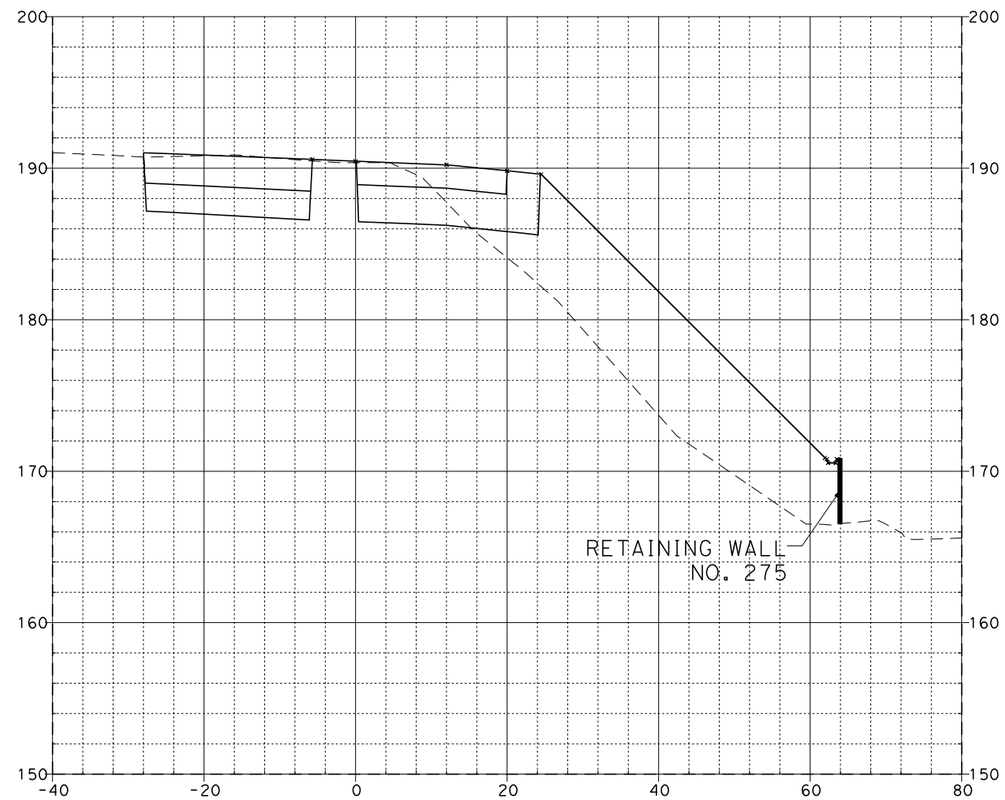

79+82.23

KATELLA ON-RAMP "C-5"

08\03\11

Dist	COUNTY	ROUTE	POST MILES TOTAL PROJECT	SHEET No.	TOTAL SHEETS
12	Ora	57	12.2/15.2		

FOR EARTHWORK DEVELOPMENT ONLY

...\d0282599\Cross_Sections.dgn

EA 0F0401

SCALE: Horiz 1"=20'
Vert 1"=10'

80+00.00

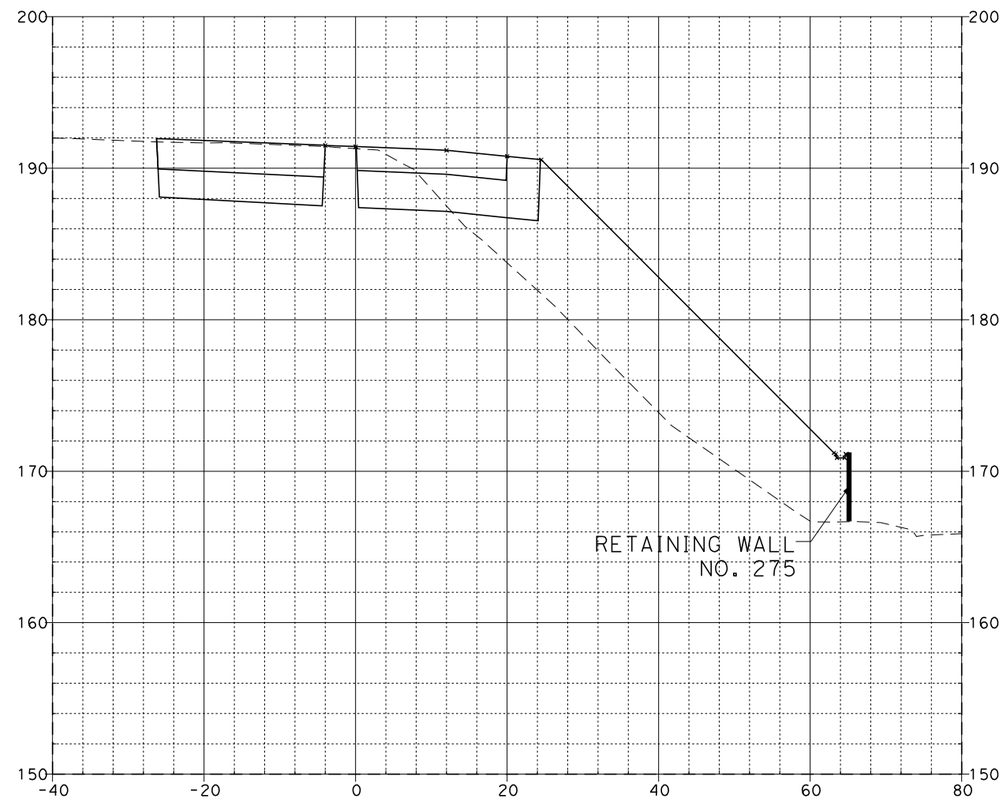

80+39.94

KATELLA ON-RAMP "C-5"

08\03\11

Dist	COUNTY	ROUTE	POST MILES TOTAL PROJECT	SHEET No.	TOTAL SHEETS
12	Ora	57	12.2/15.2		

FOR EARTHWORK DEVELOPMENT ONLY

...\d0282599\Cross_Sections.dgn

EA 0F0401

SCALE: Horiz 1"=20'
Vert 1"=10'

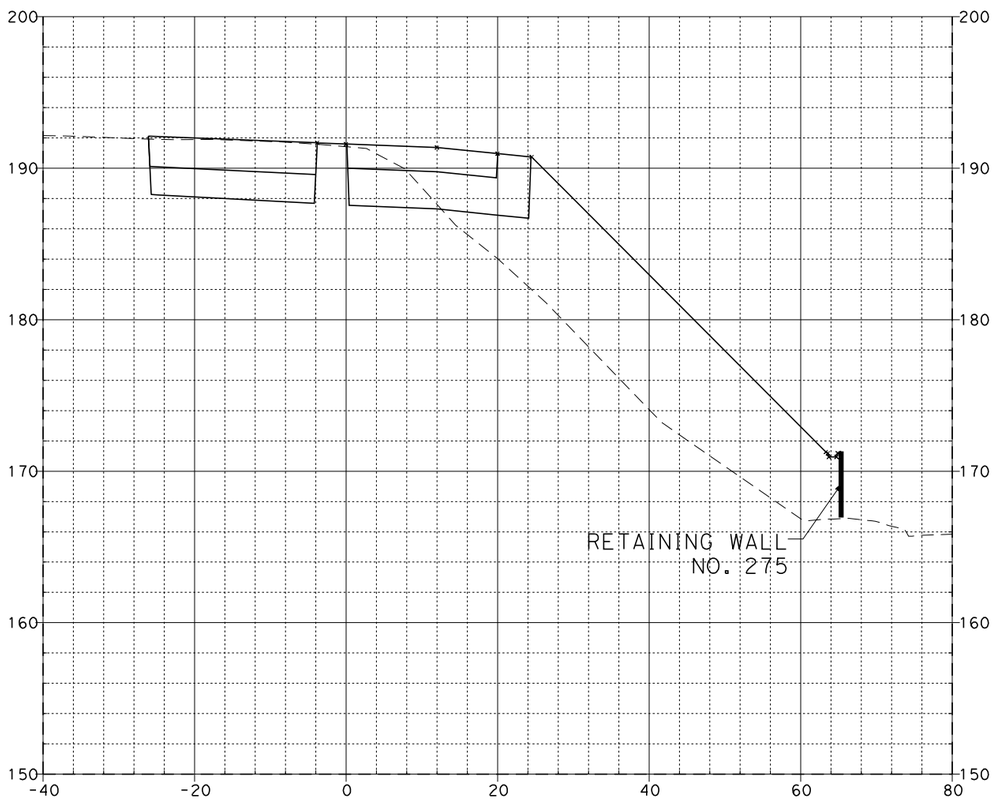

80+50.00

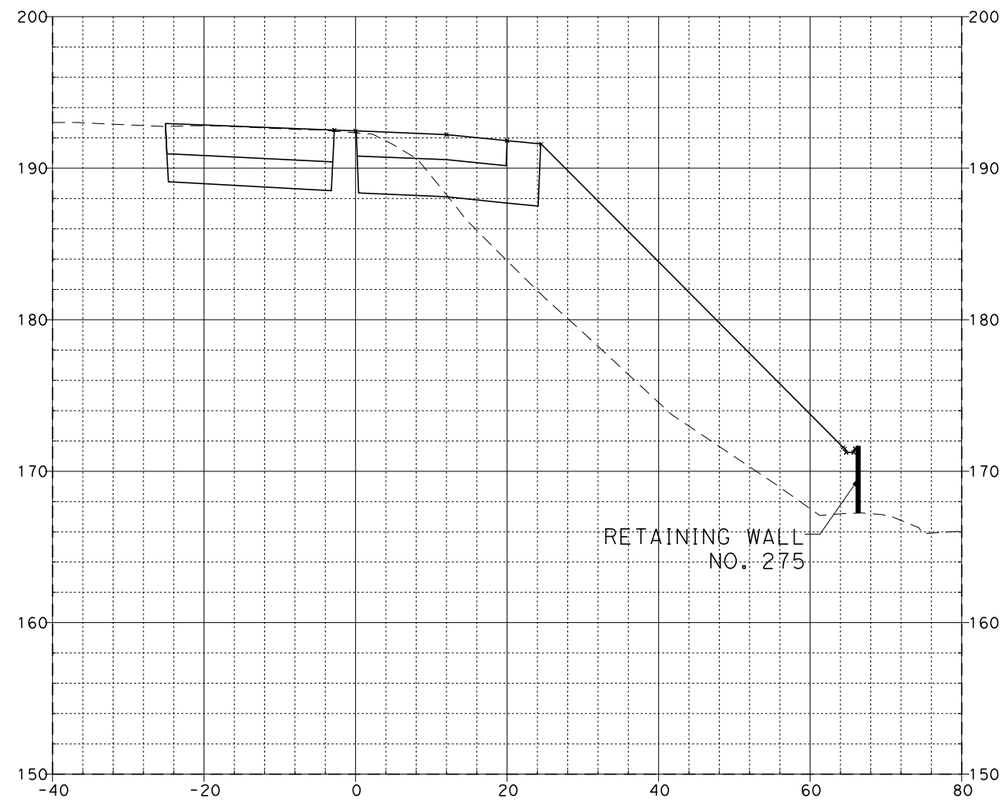

81+00.00

KATELLA ON-RAMP "C-5"

08\03\11

Dist	COUNTY	ROUTE	POST MILES TOTAL PROJECT	SHEET No.	TOTAL SHEETS
12	Ora	57	12.2/15.2		

FOR EARTHWORK DEVELOPMENT ONLY

...\d0282599\Cross_Sections.dgn

EA 0F0401

SCALE: Horiz 1"=20'
Vert 1"=10'

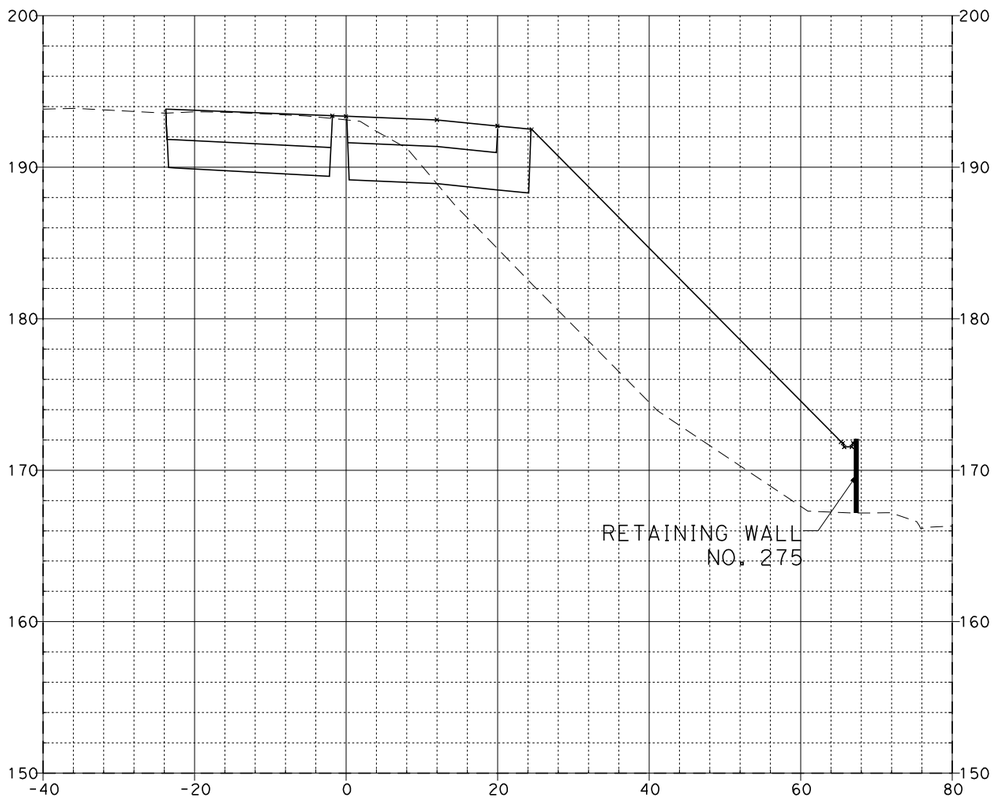

81+50.00

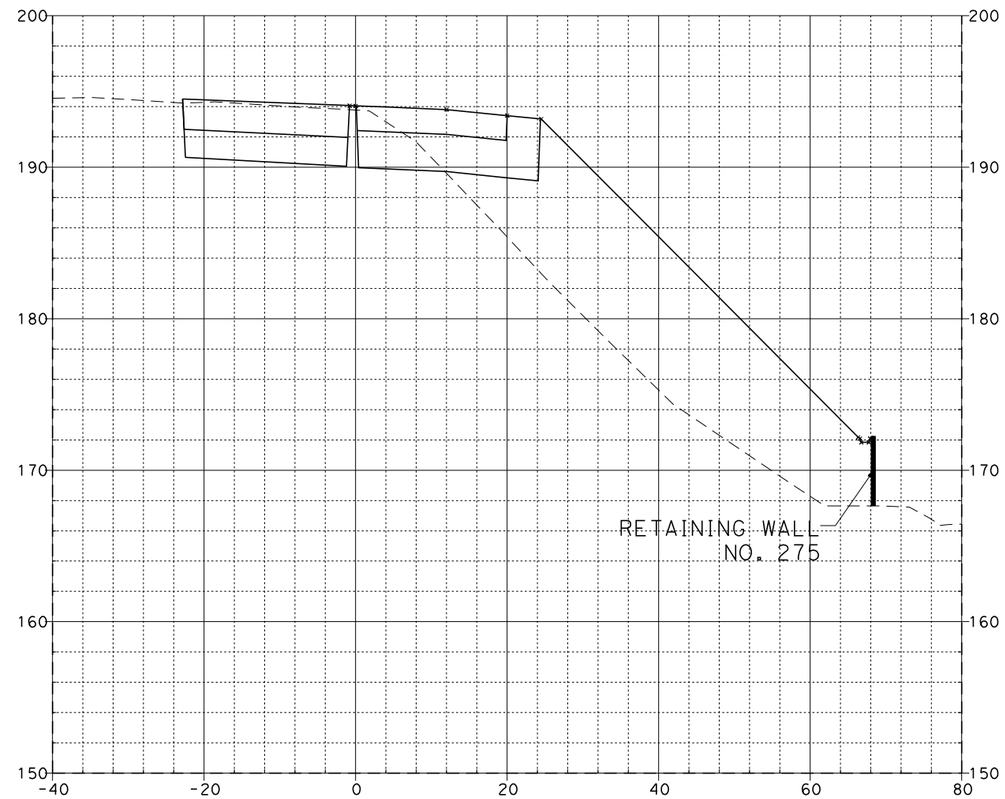

82+00.00

KATELLA ON-RAMP "C-5"

08\03\11

Dist	COUNTY	ROUTE	POST MILES TOTAL PROJECT	SHEET No.	TOTAL SHEETS
12	Ora	57	12.2/15.2		

FOR EARTHWORK DEVELOPMENT ONLY

...\d0282599\Cross_Sections.dgn

EA 0F0401

SCALE: Horiz 1"=20'
Vert 1"=10'

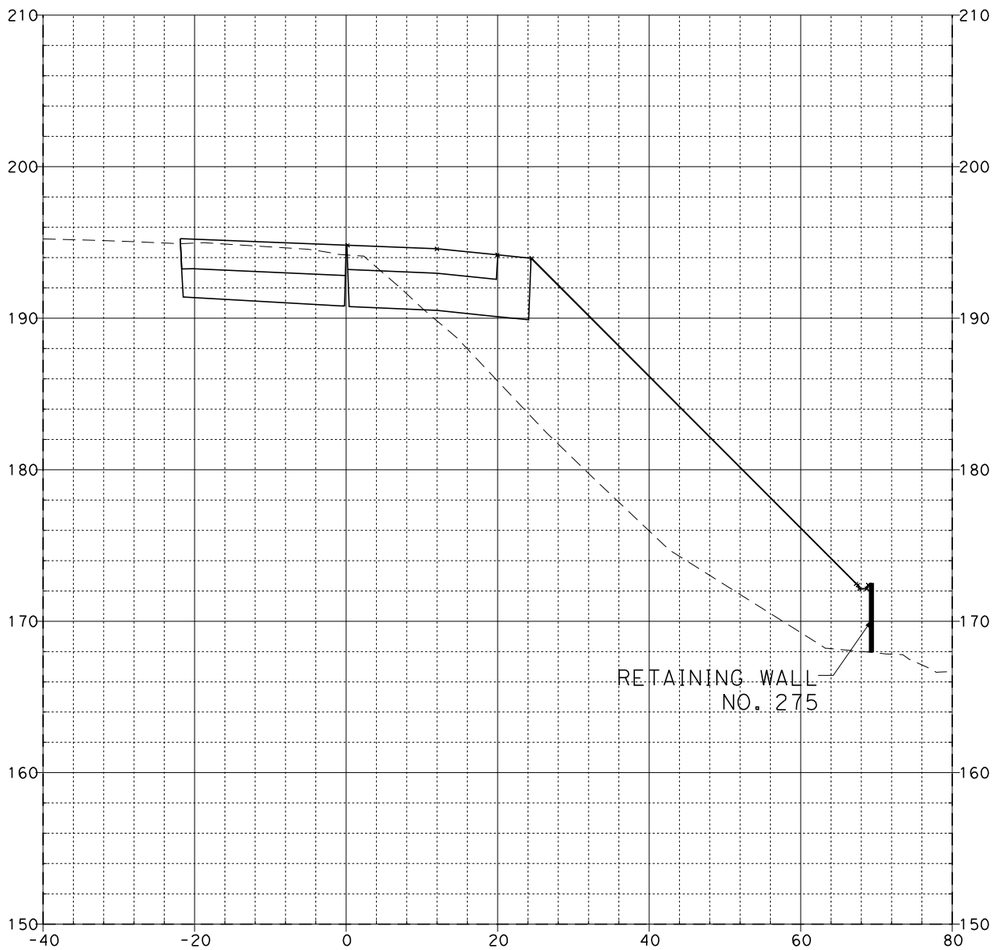

82+50.00

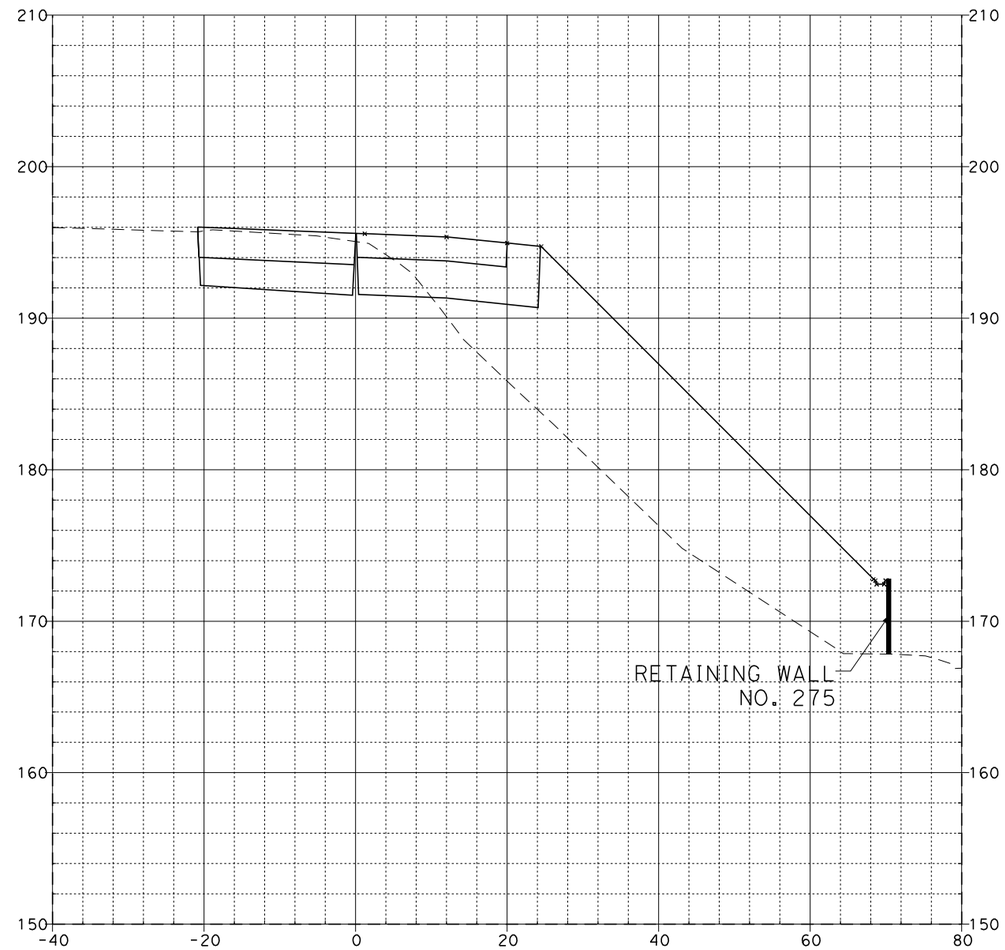

83+00.00

KATELLA ON-RAMP "C-5"

08\03\11

Dist	COUNTY	ROUTE	POST MILES TOTAL PROJECT	SHEET No.	TOTAL SHEETS
12	Ora	57	12.2/15.2		

FOR EARTHWORK DEVELOPMENT ONLY

...\d0282599\Cross_Sections.dgn

EA 0F0401

SCALE: Horiz 1"=20'
Vert 1"=10'

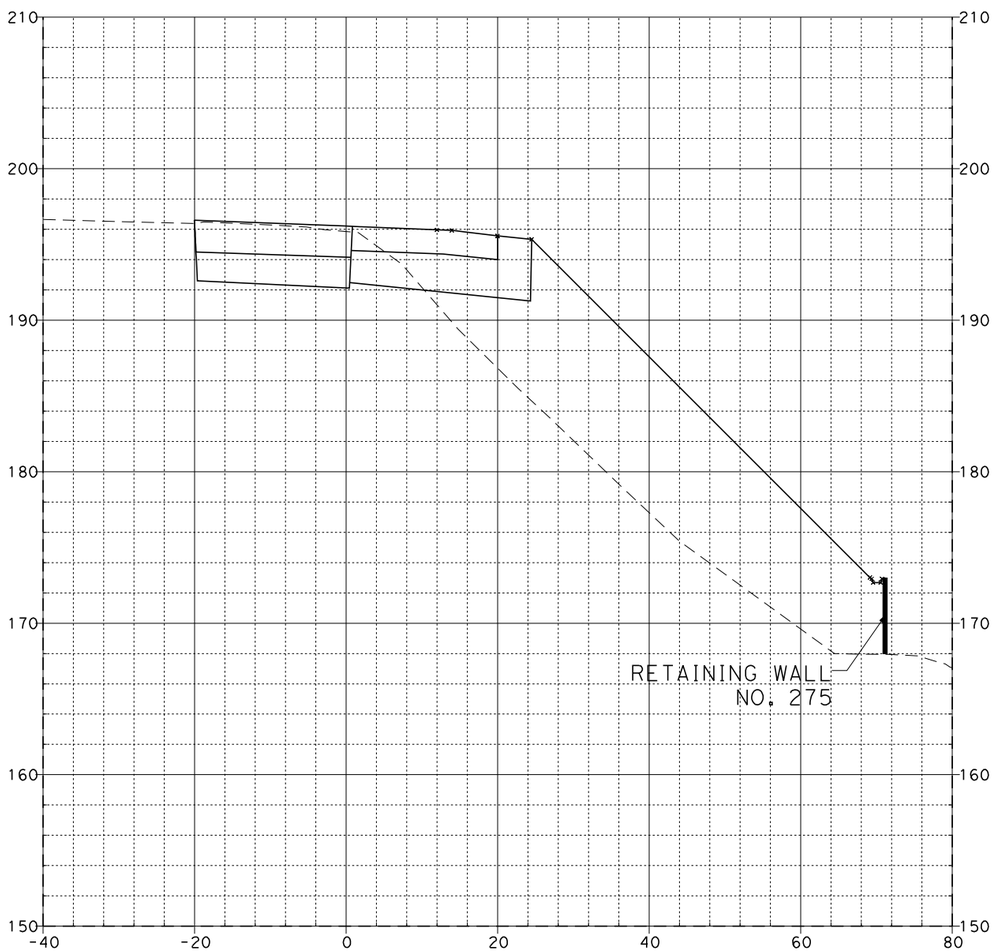

83+40.00

KATELLA ON-RAMP "C-5"

08\03\11

Dist	COUNTY	ROUTE	POST MILES TOTAL PROJECT	SHEET No.	TOTAL SHEETS
12	Ora	57	12.2/15.2		

FOR EARTHWORK DEVELOPMENT ONLY

...\d0282599\Cross_Sections.dgn

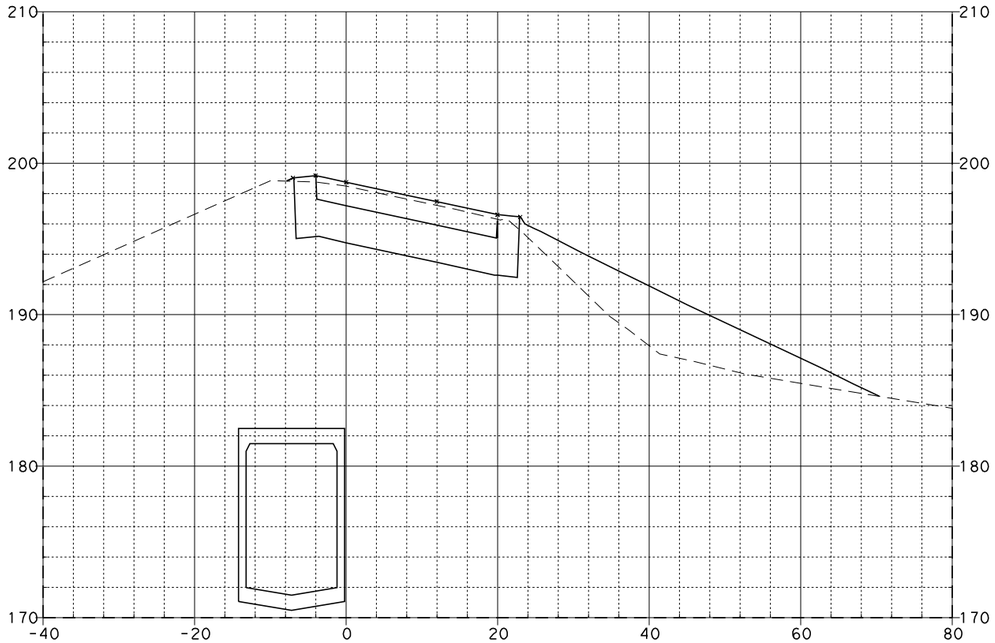

16+50.00

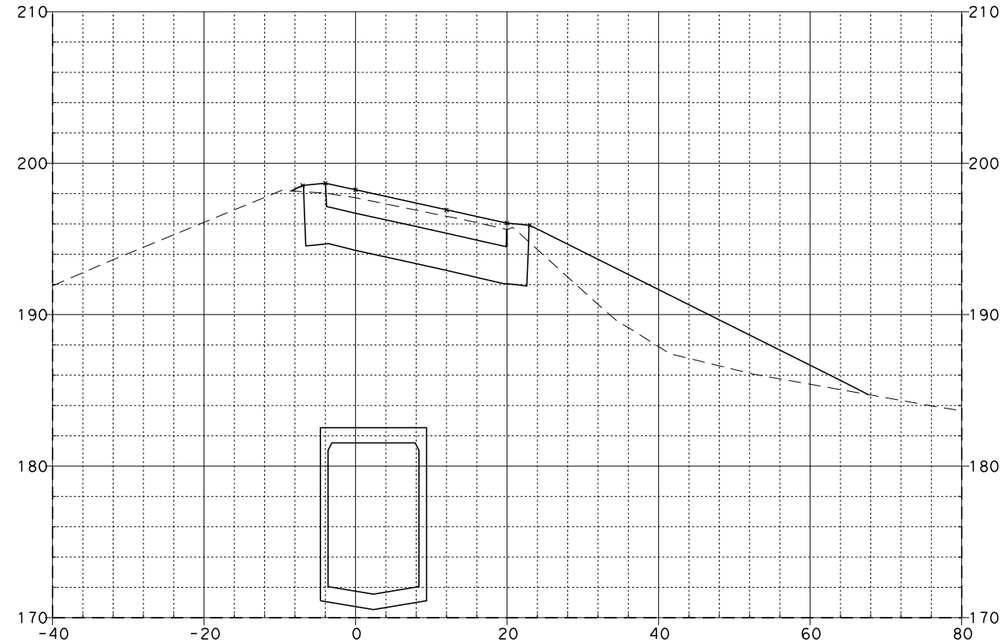

16+75.00

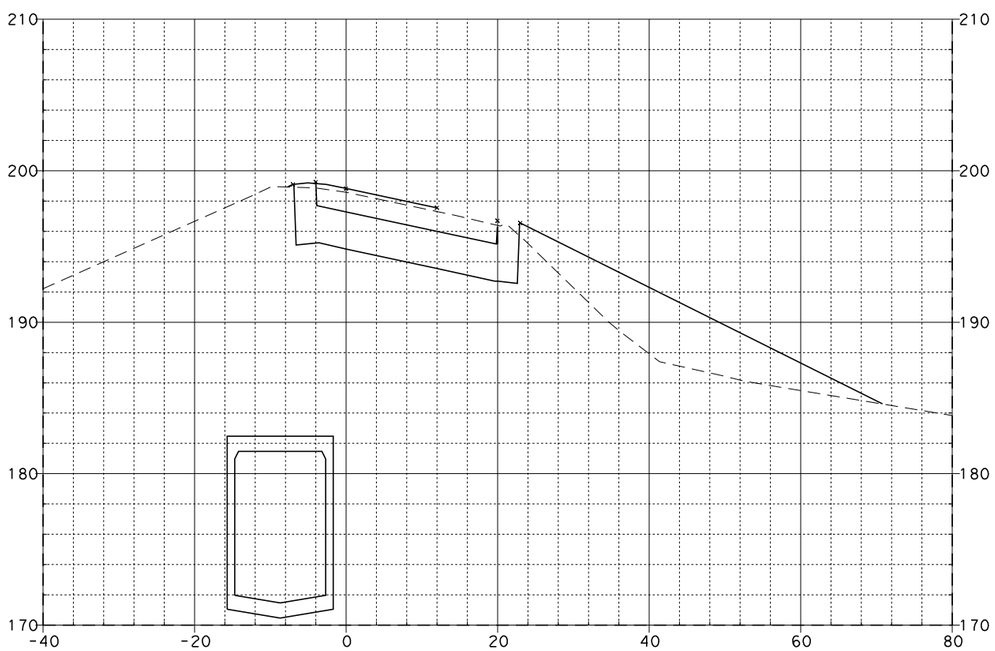

16+46.39

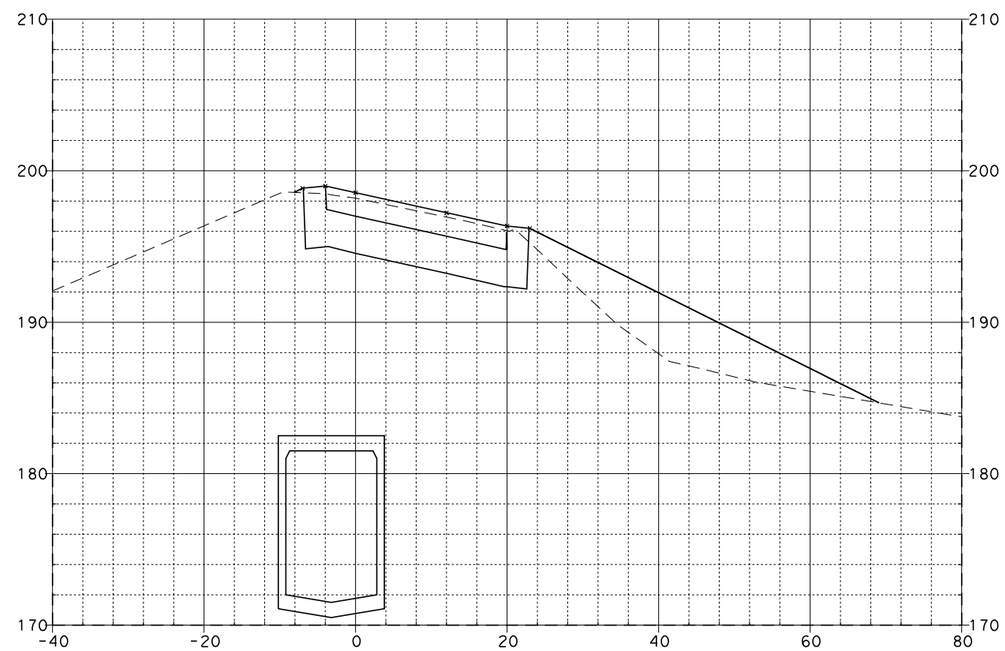

16+60.00

BALL ON-RAMP "D-3"

EA 0F0401

SCALE: Horiz 1"=20'
Vert 1"=10'

08\03\11

Dist	COUNTY	ROUTE	POST MILES TOTAL PROJECT	SHEET No.	TOTAL SHEETS
12	Ora	57	12.2/15.2		

FOR EARTHWORK DEVELOPMENT ONLY

...\d0282599\Cross_Sections.dgn

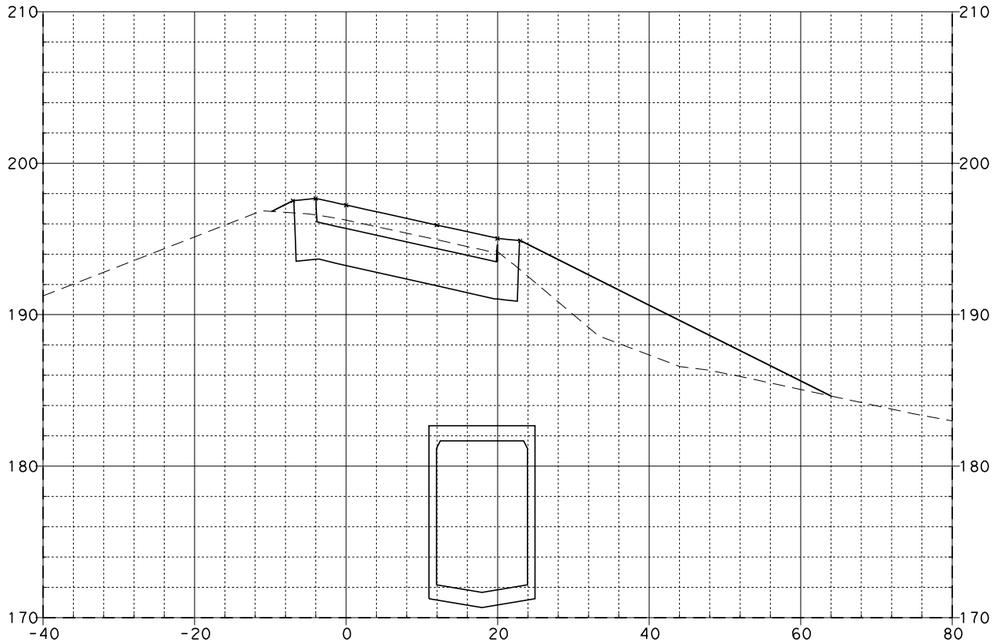

17+25.00

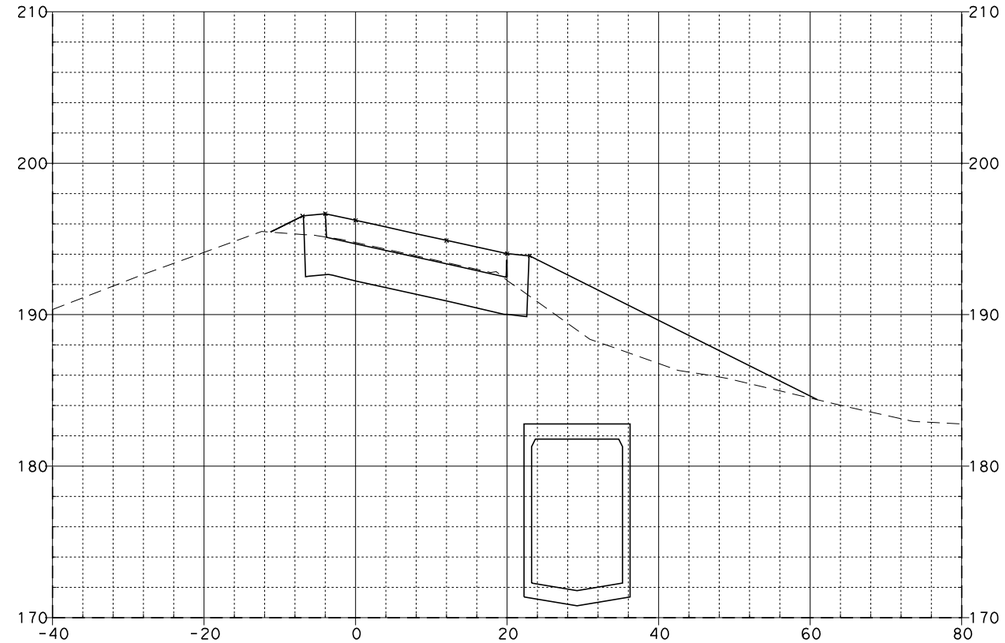

17+75.00

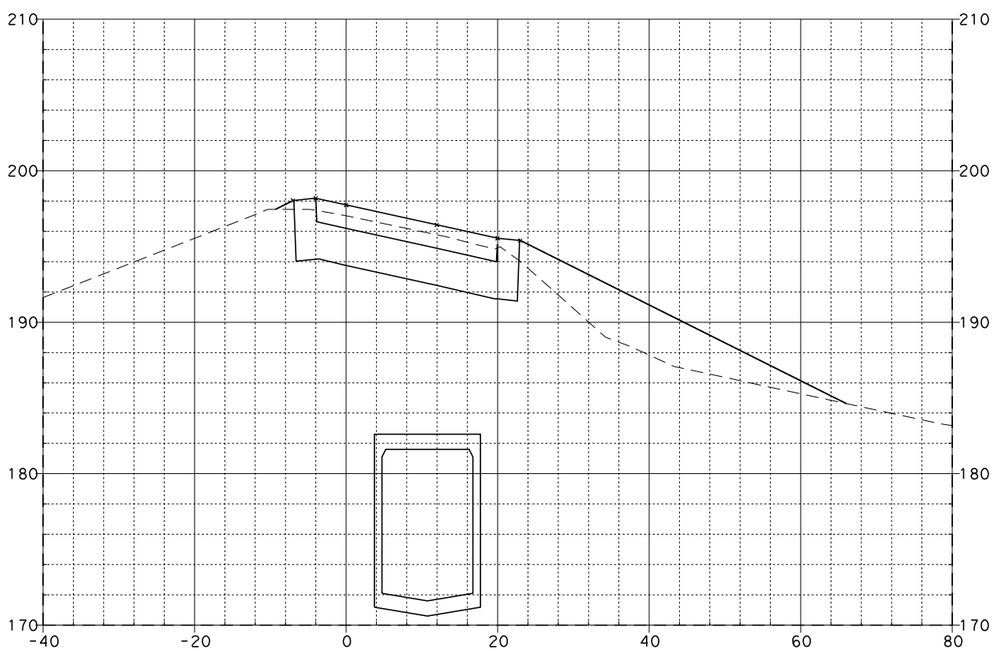

17+00.00

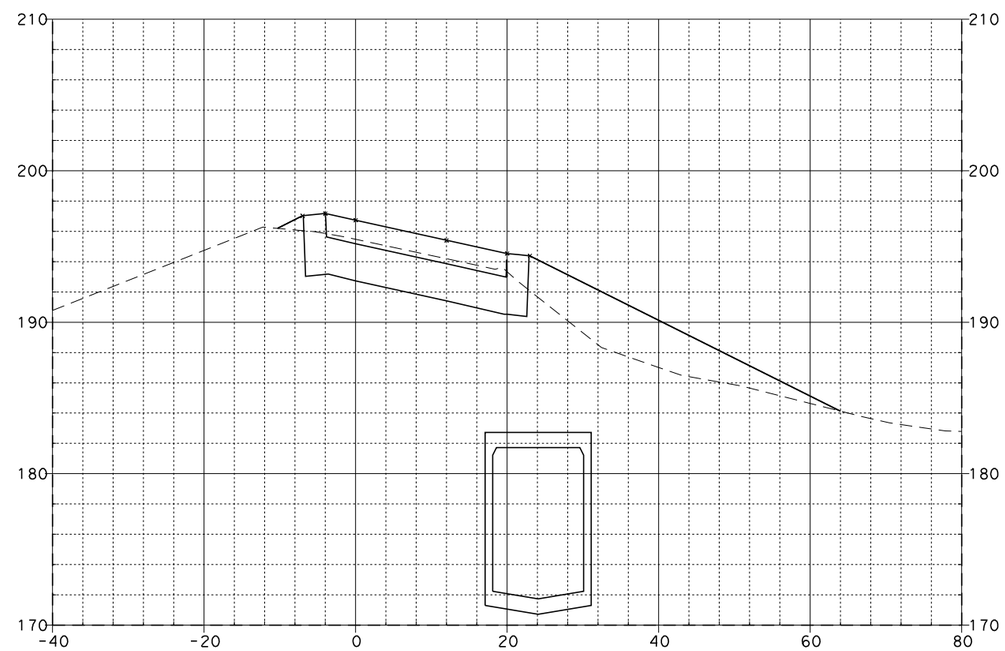

17+50.00

BALL ON-RAMP "D-3"

EA 0F0401

SCALE: Horiz 1"=20'
Vert 1"=10'

08\03\11

Dist	COUNTY	ROUTE	POST MILES TOTAL PROJECT	SHEET No.	TOTAL SHEETS
12	Ora	57	12.2/15.2		

FOR EARTHWORK DEVELOPMENT ONLY

...\d0282599\Cross_Sections.dgn

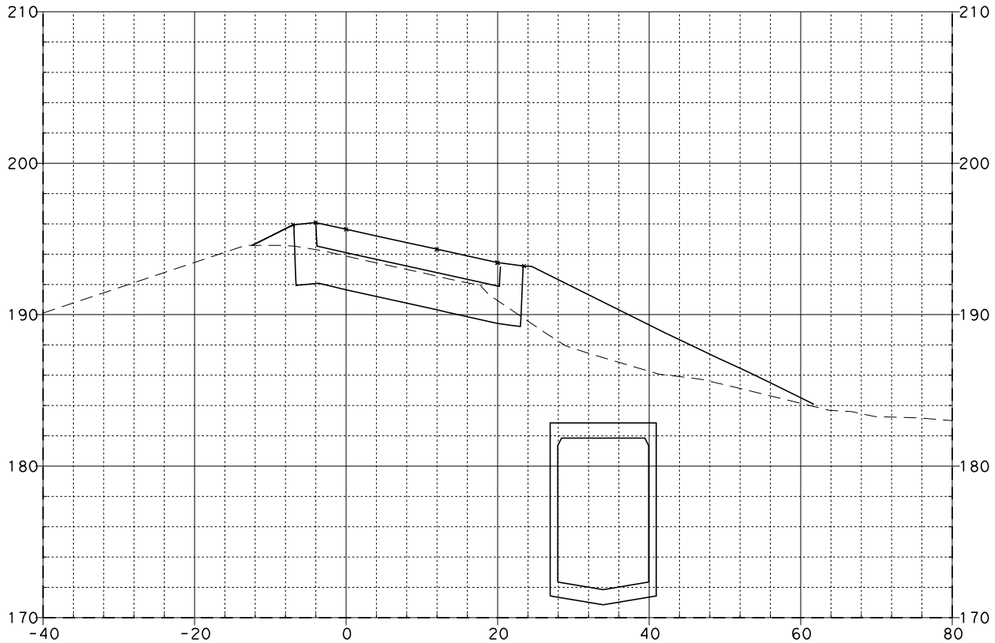

18+04.13

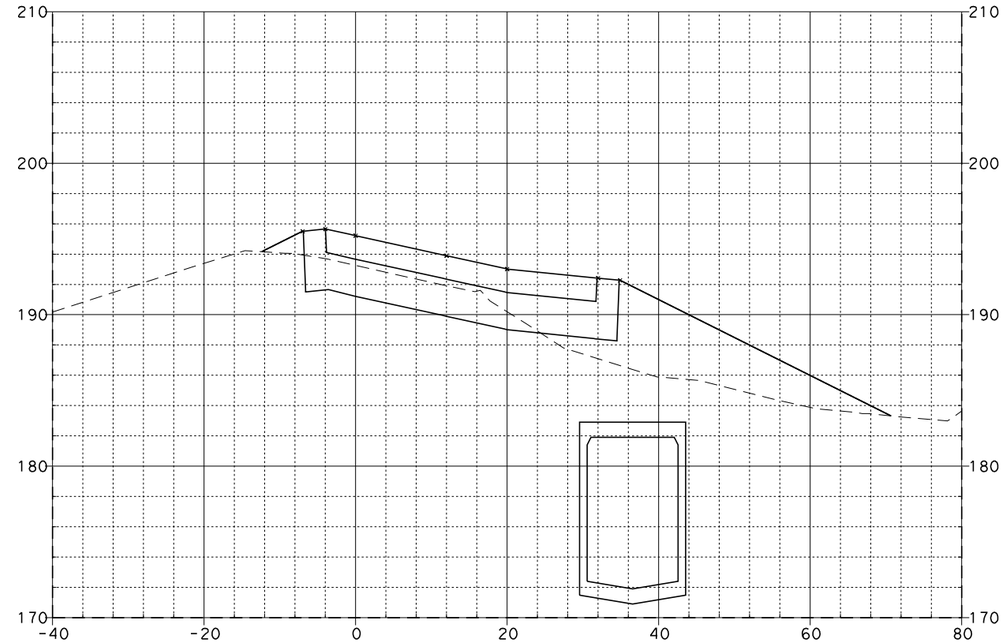

18+25.16

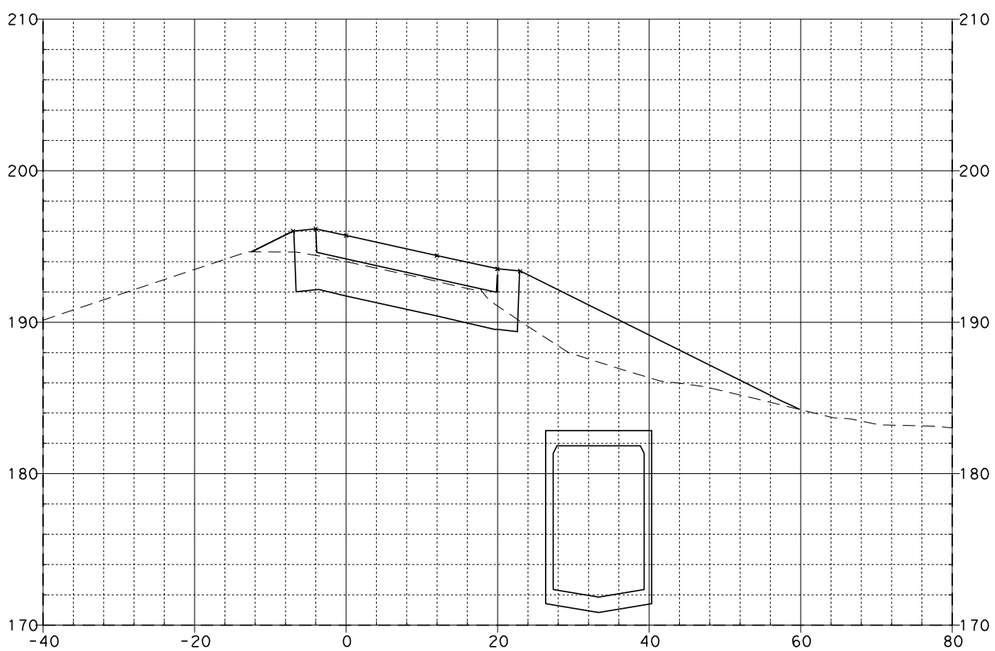

18+00.00

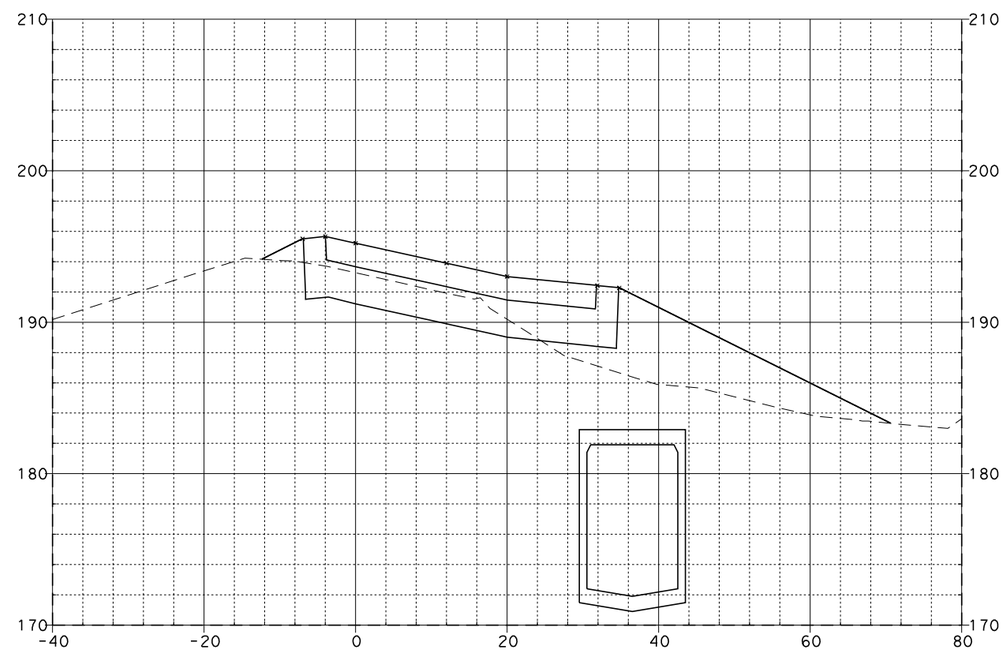

18+25.00

BALL ON-RAMP "D-3"

EA 0F0401

SCALE: Horiz 1"=20'
Vert 1"=10'

08\03\11

Dist	COUNTY	ROUTE	POST MILES TOTAL PROJECT	SHEET No.	TOTAL SHEETS
12	Ora	57	12.2/15.2		

FOR EARTHWORK DEVELOPMENT ONLY

...\d0282599\Cross_Sections.dgn

EA 0F0401

SCALE: Horiz 1"=20'
Vert 1"=10'

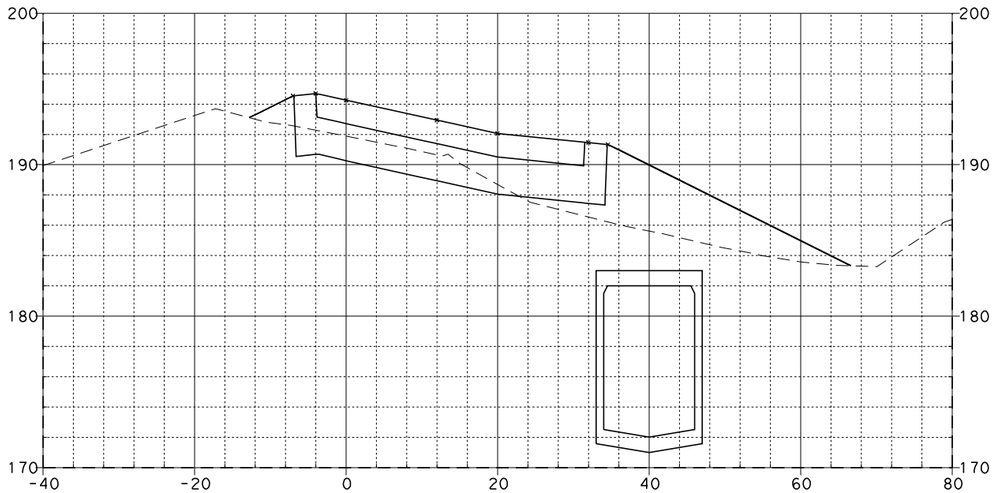

18+72.49

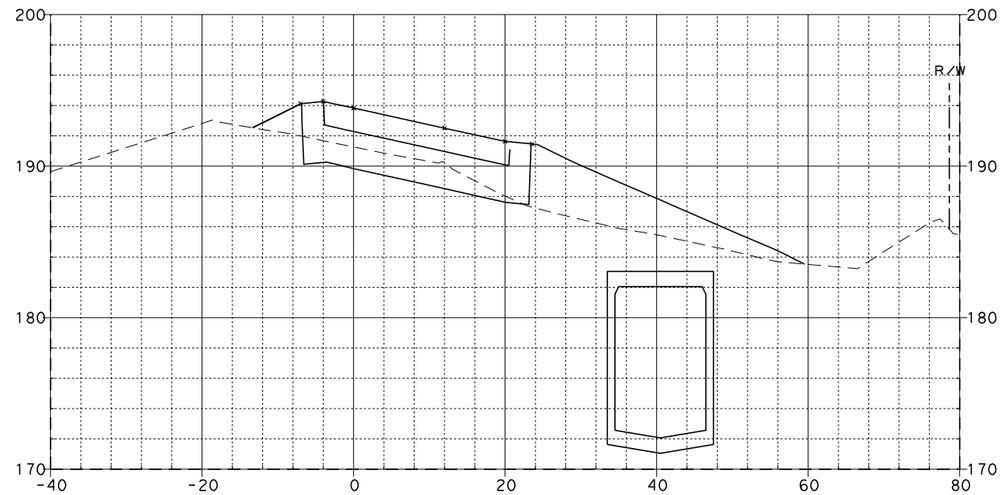

18+93.53

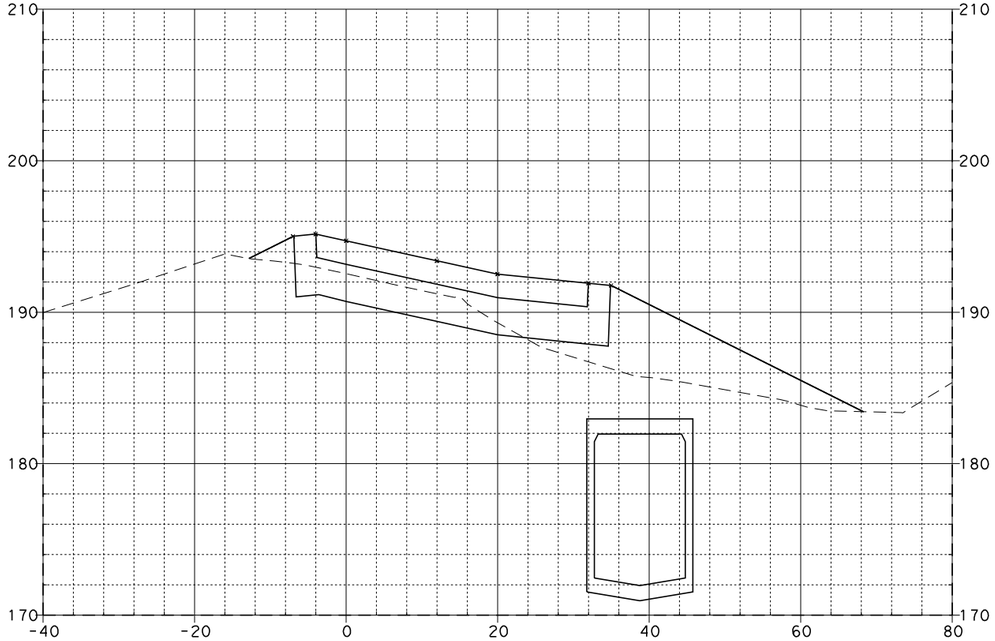

18+50.00

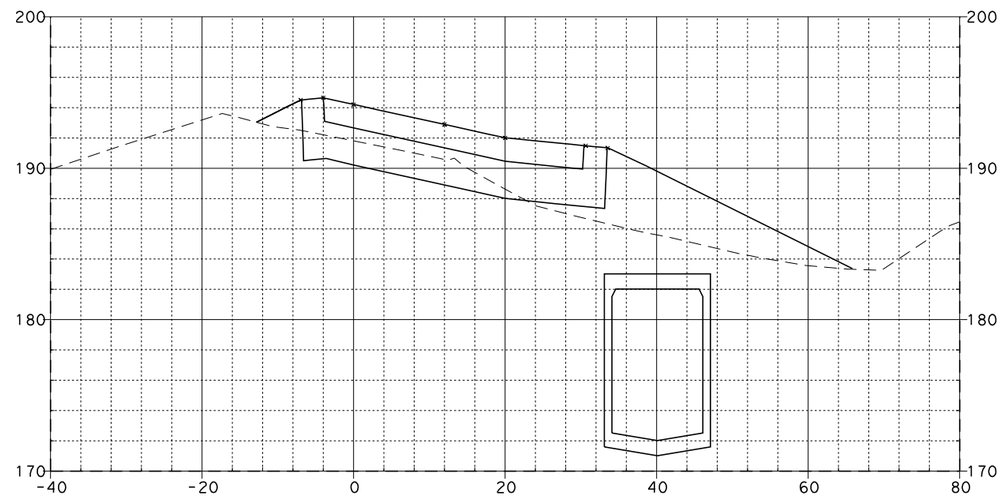

18+75.00

BALL ON-RAMP "D-3"

08\03\11

Dist	COUNTY	ROUTE	POST MILES TOTAL PROJECT	SHEET No.	TOTAL SHEETS
12	Ora	57	12.2/15.2		

FOR EARTHWORK DEVELOPMENT ONLY

...\d0282599\Cross_Sections.dgn

EA 0F0401

SCALE: Horiz 1"=20'
Vert 1"=10'

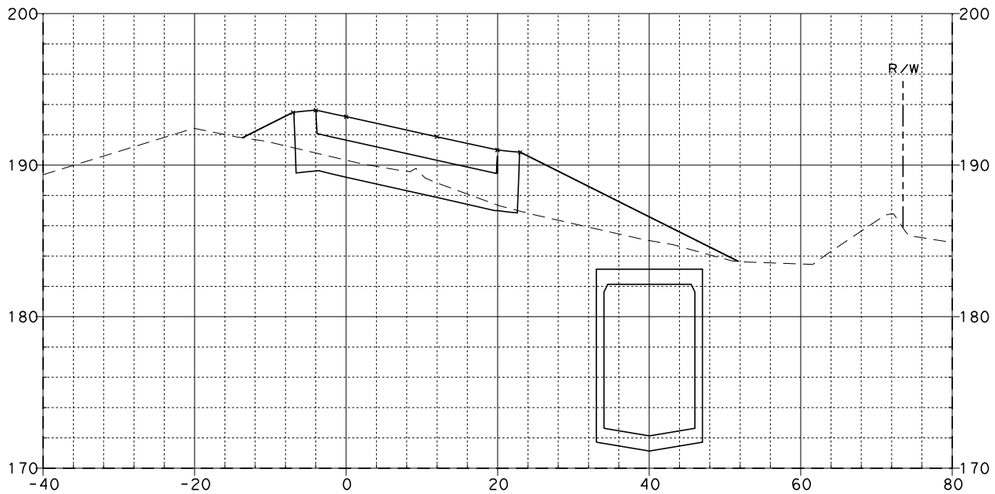

19+25.00

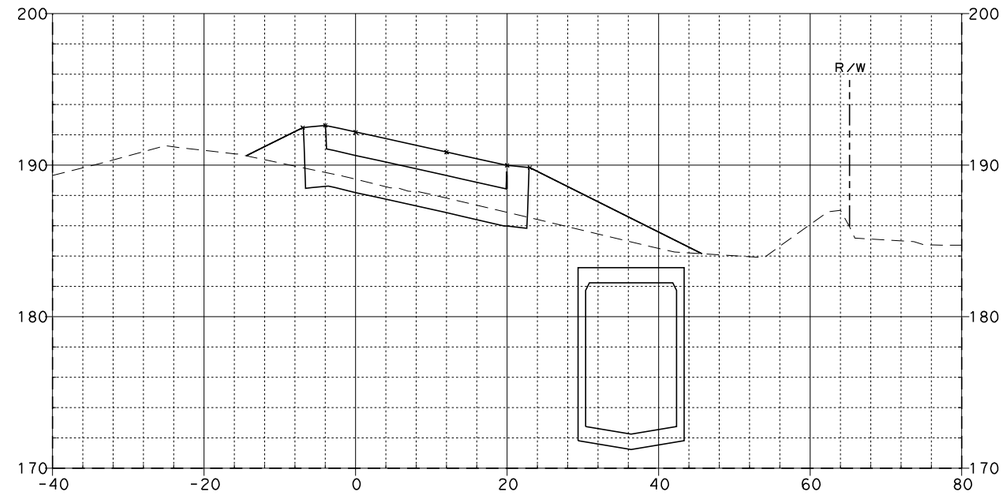

19+75.00

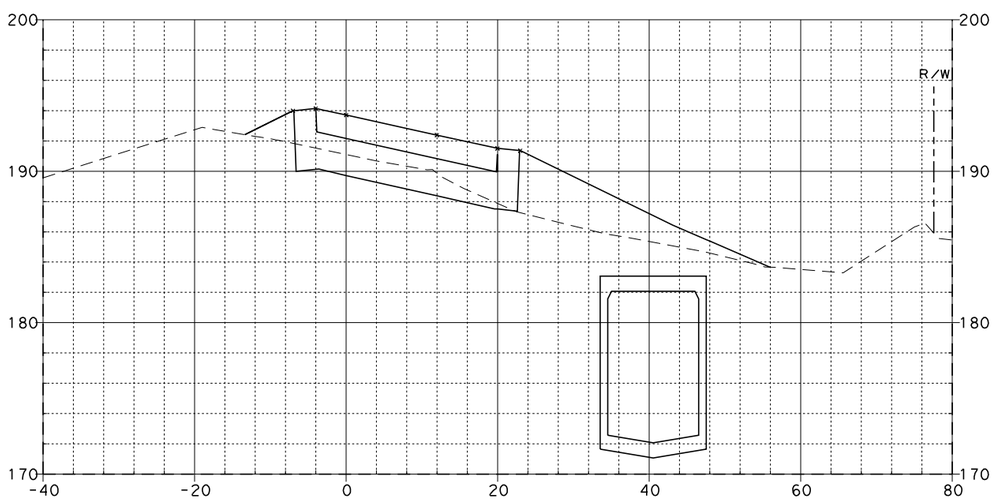

19+00.00

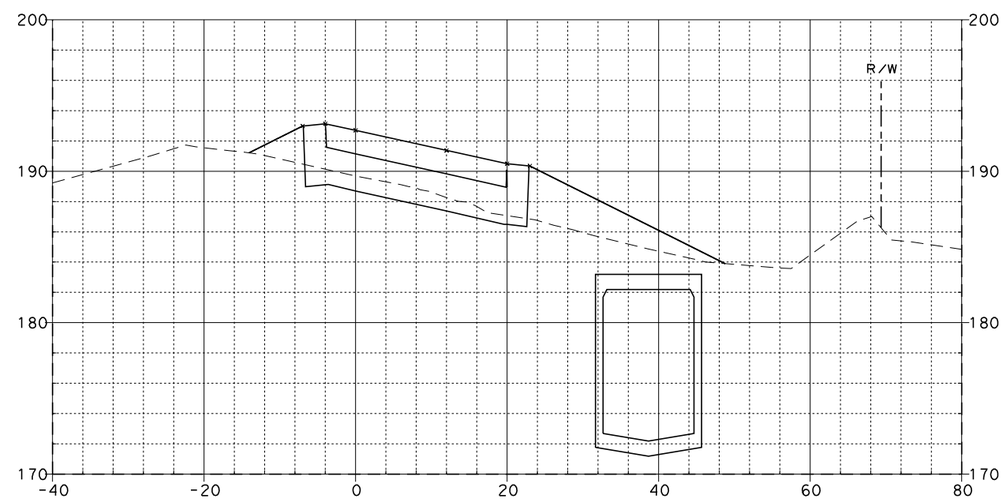

19+50.00

BALL ON-RAMP "D-3"

08\03\11

Dist	COUNTY	ROUTE	POST MILES TOTAL PROJECT	SHEET NO.	TOTAL SHEETS
12	Ora	57	12.2/15.2		

FOR EARTHWORK DEVELOPMENT ONLY

...\d0282599\Cross_Sections.dgn

EA 0F0401

SCALE: Horiz 1"=20'
Vert 1"=10'

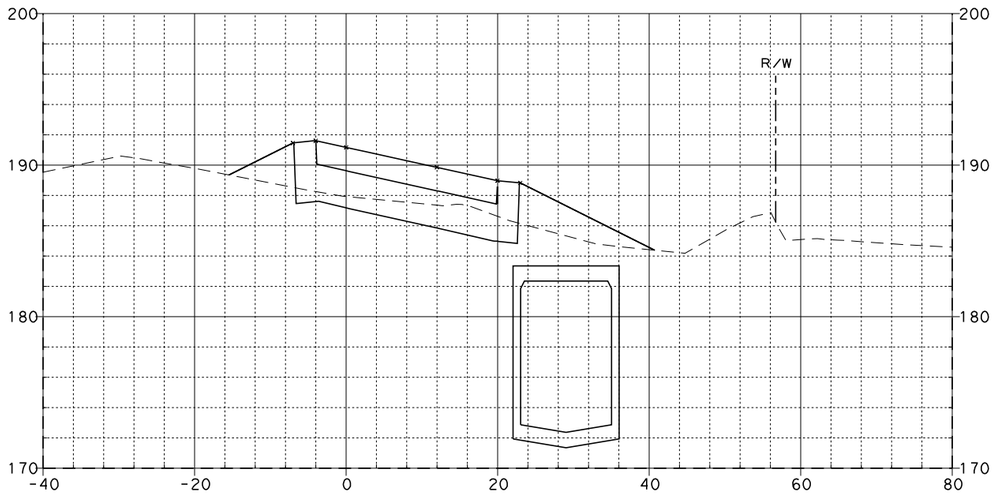

20+25.00

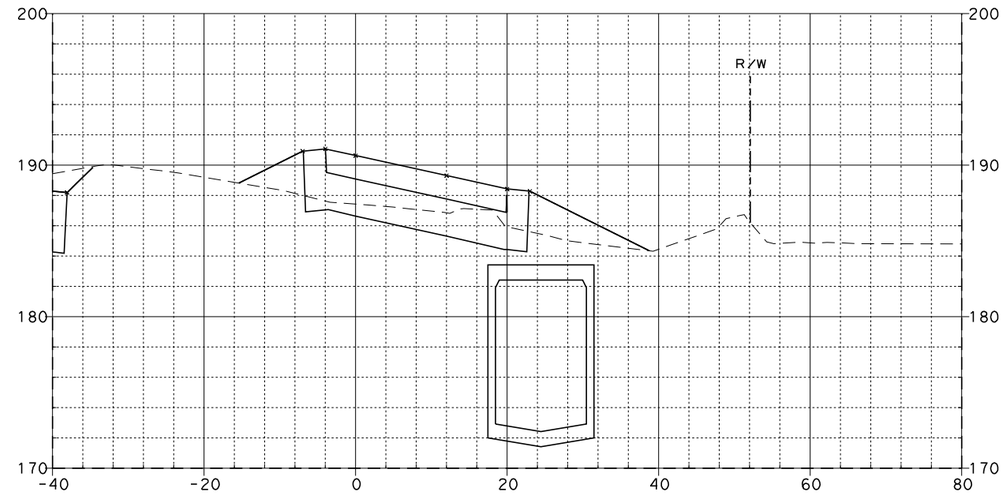

20+52.01

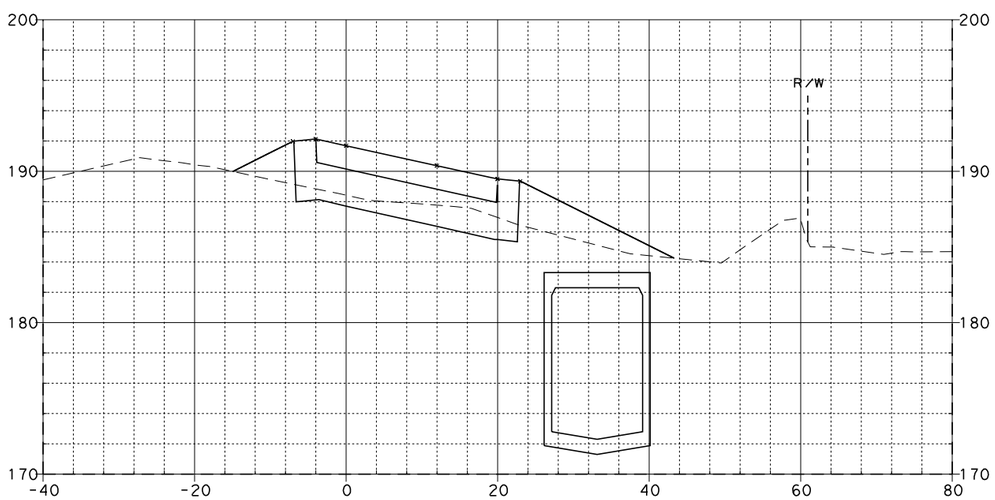

20+00.00

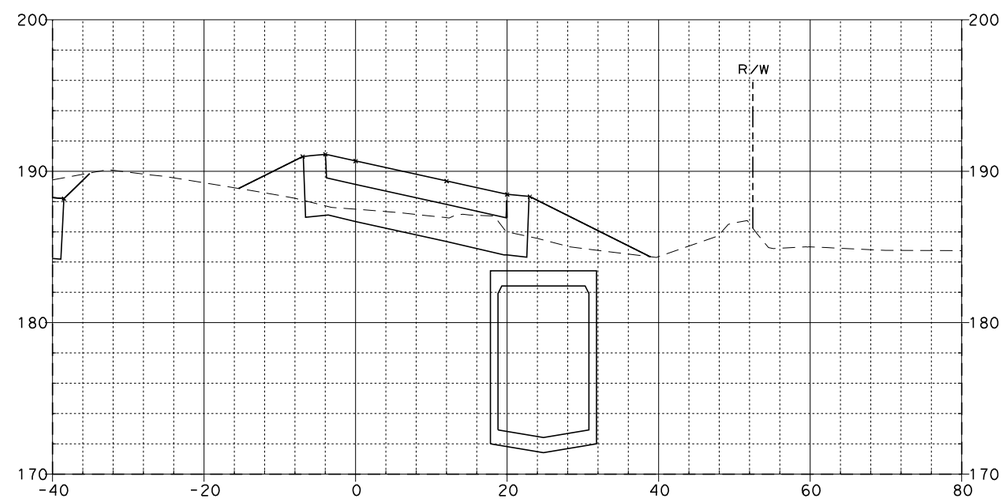

20+50.00

BALL ON-RAMP "D-3"

08\03\11

Dist	COUNTY	ROUTE	POST MILES TOTAL PROJECT	SHEET No.	TOTAL SHEETS
12	Ora	57	12.2/15.2		

FOR EARTHWORK DEVELOPMENT ONLY

...\d0282599\Cross_Sections.dgn

EA 0F0401

SCALE: Horiz 1"=20'
Vert 1"=10'

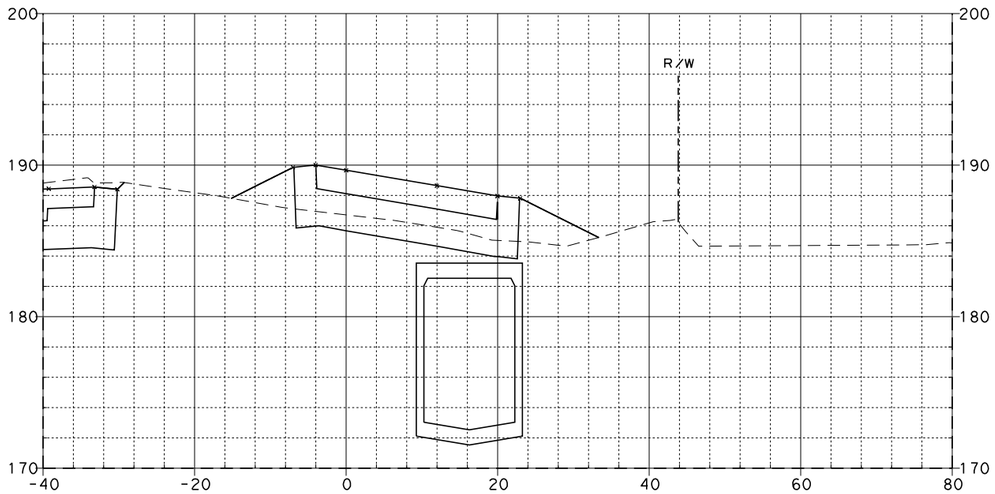

21+00.00

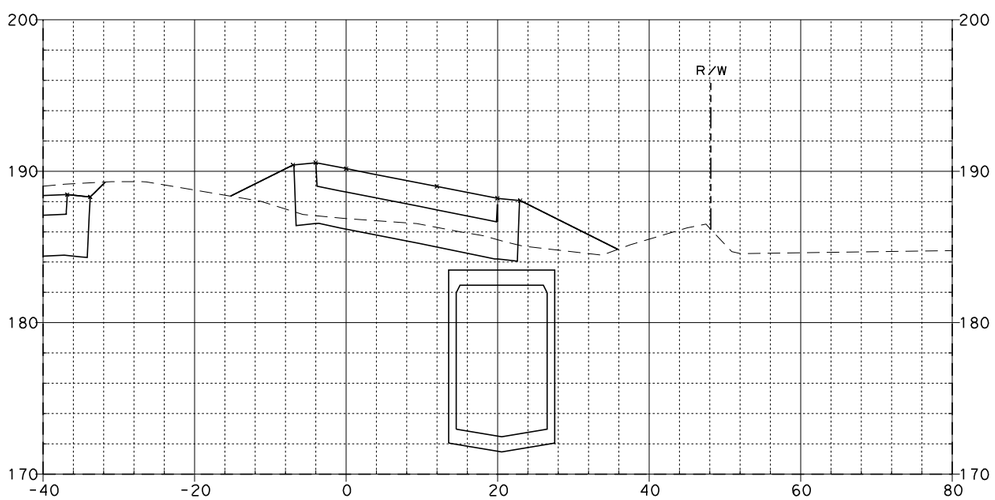

20+75.00

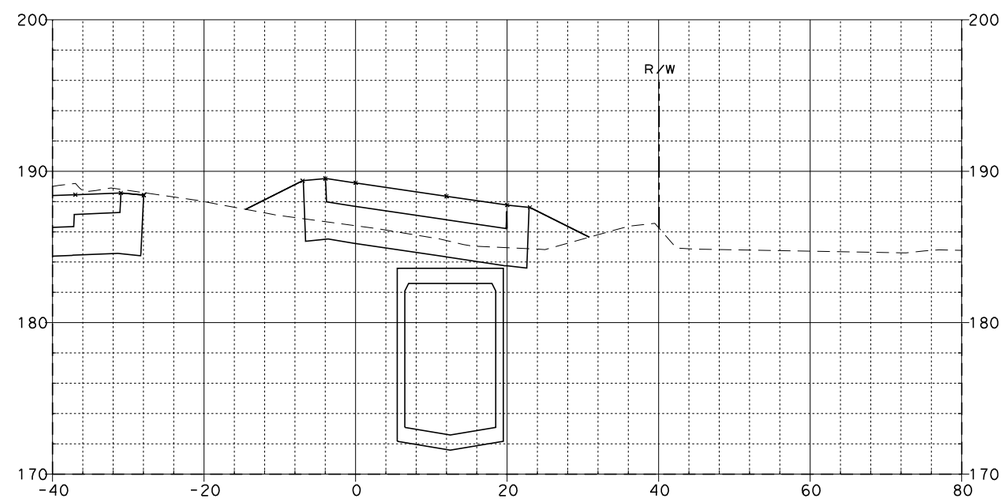

21+22.01

BALL ON-RAMP "D-3"

08\03\11

Dist	COUNTY	ROUTE	POST MILES TOTAL PROJECT	SHEET NO.	TOTAL SHEETS
12	Ora	57	12.2/15.2		

FOR EARTHWORK DEVELOPMENT ONLY

...\d0282599\Cross_Sections.dgn

EA 0F0401

SCALE: Horiz 1"=20'
Vert 1"=10'

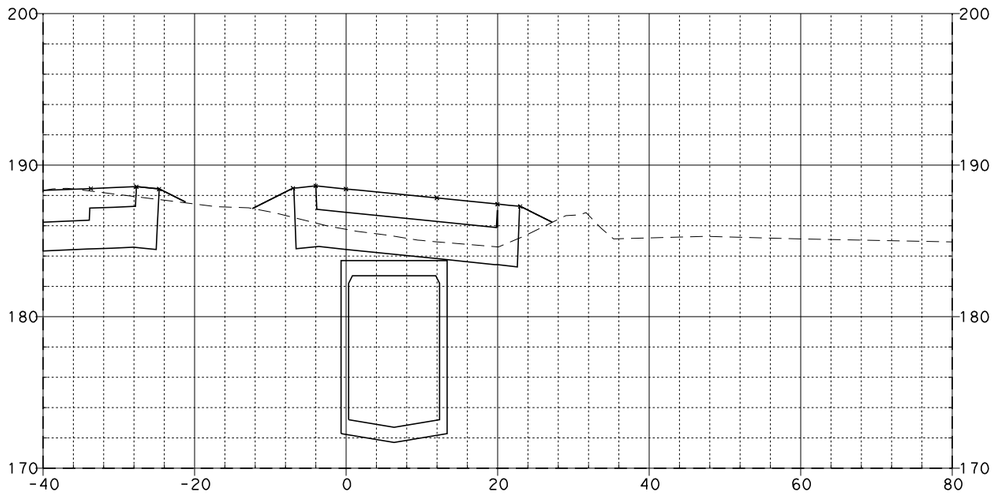

21+66.56

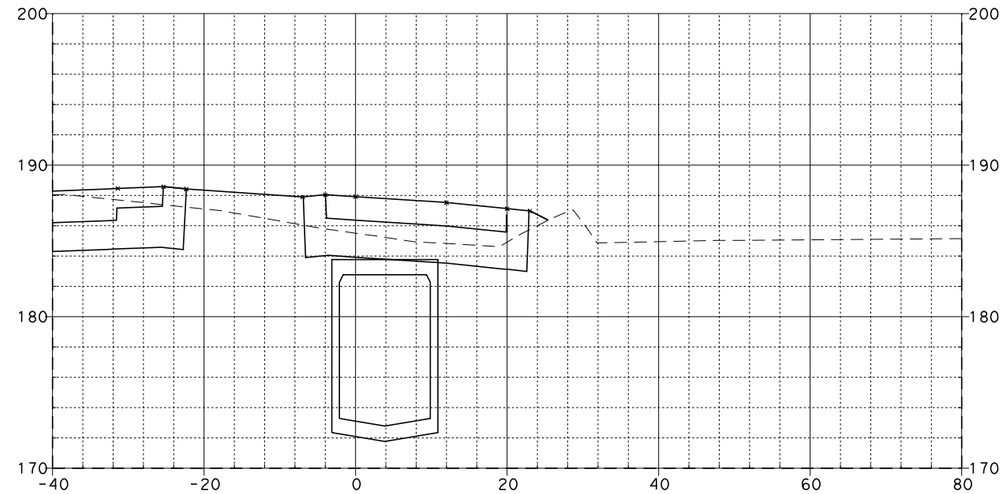

22+00.00

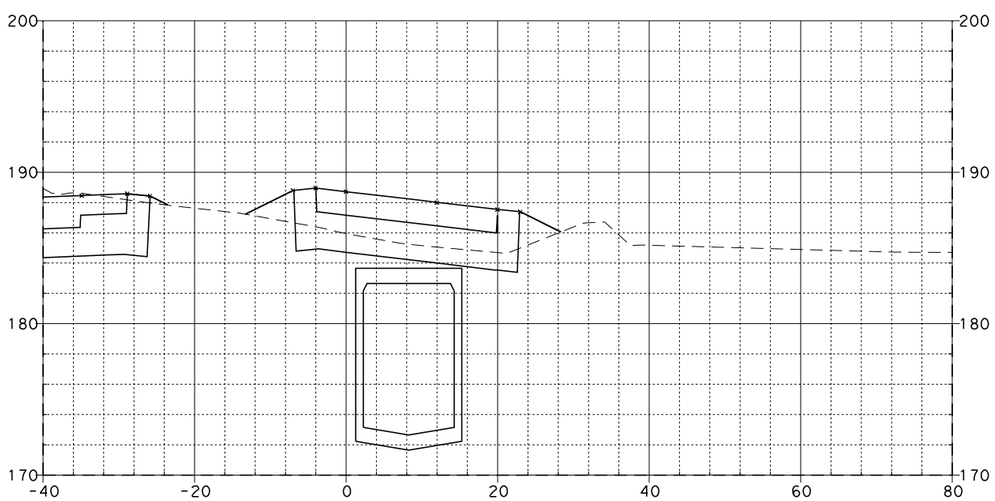

21+50.00

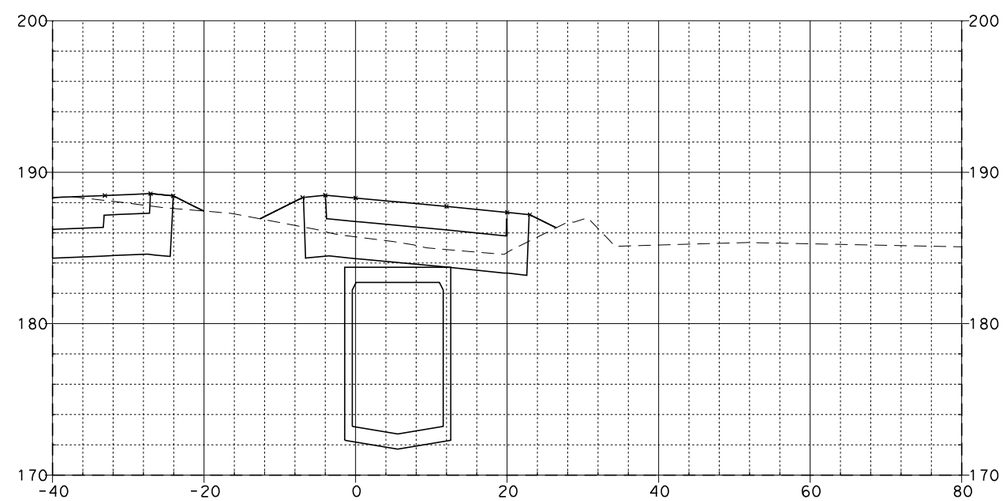

21+75.00

BALL ON-RAMP "D-3"

08\03\11

Dist	COUNTY	ROUTE	POST MILES TOTAL PROJECT	SHEET NO.	TOTAL SHEETS
12	Ora	57	12.2/15.2		

FOR EARTHWORK DEVELOPMENT ONLY

...\d0282599\Cross_Sections.dgn

EA 0F0401

SCALE: Horiz 1"=20'
Vert 1"=10'

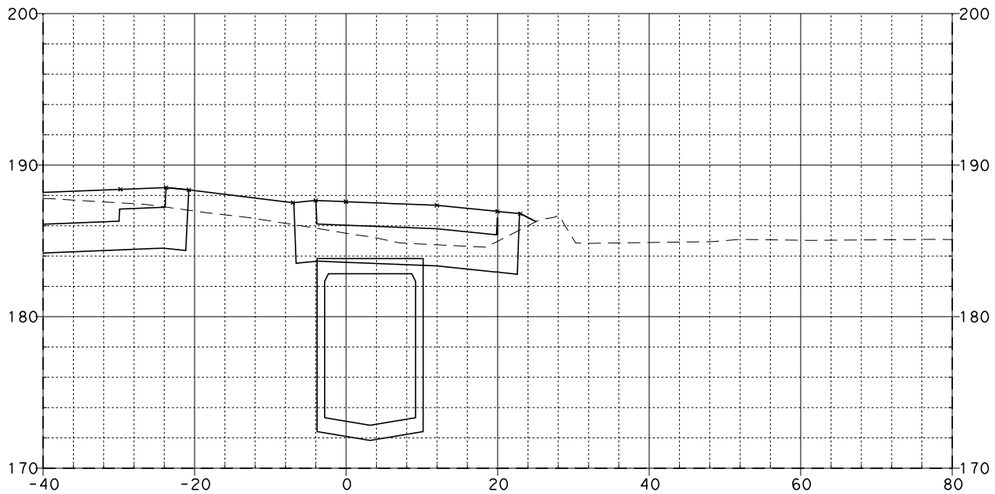

22+25.00

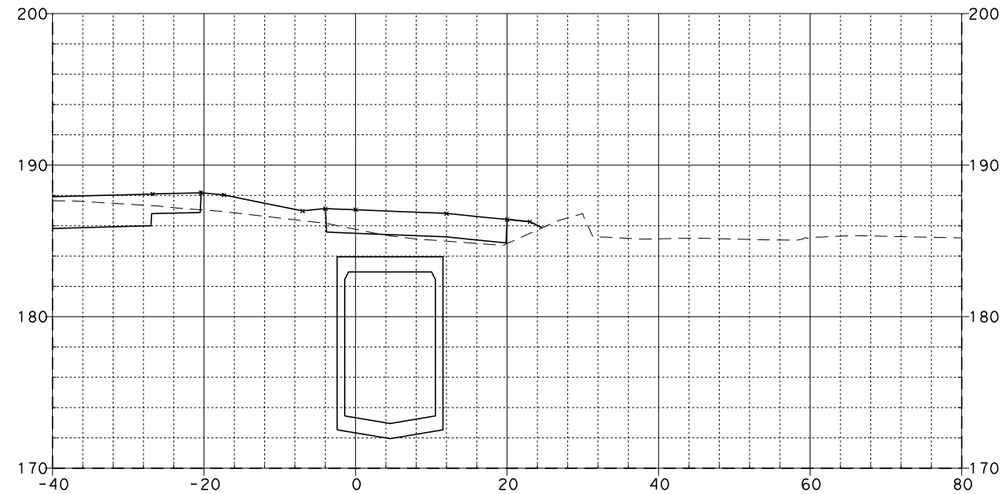

22+75.00

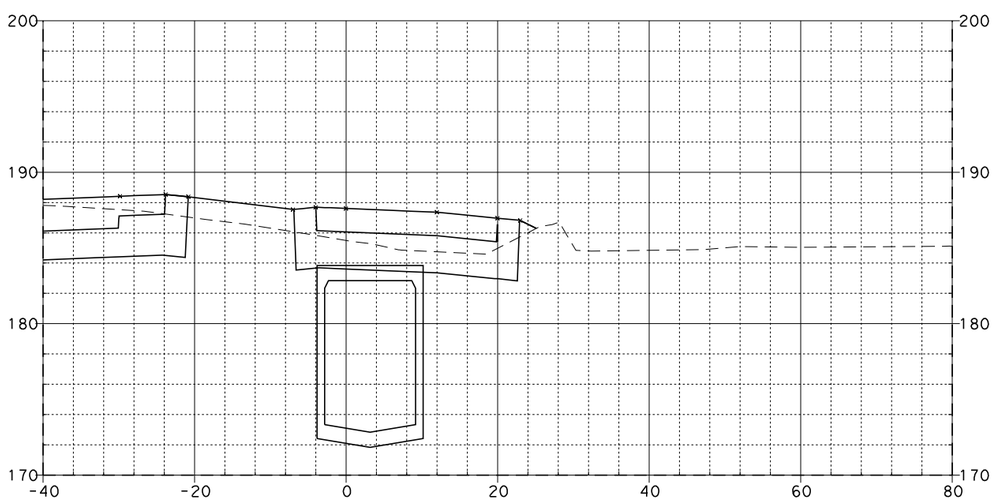

22+23.83

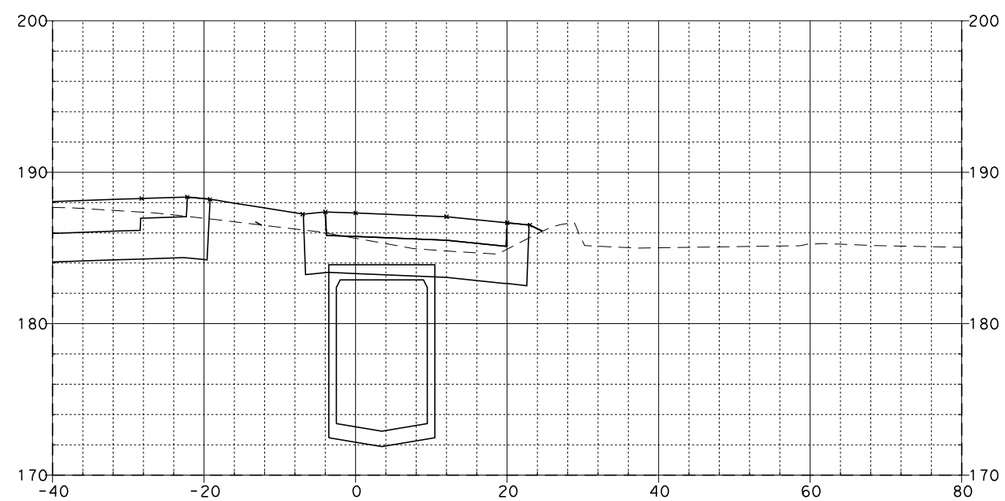

22+50.00

BALL ON-RAMP "D-3"

08\03\11

Dist	COUNTY	ROUTE	POST MILES TOTAL PROJECT	SHEET NO.	TOTAL SHEETS
12	Ora	57	12.2/15.2		

FOR EARTHWORK DEVELOPMENT ONLY

...\d0282599\Cross_Sections.dgn

EA 0F0401

SCALE: Horiz 1"=20'
Vert 1"=10'

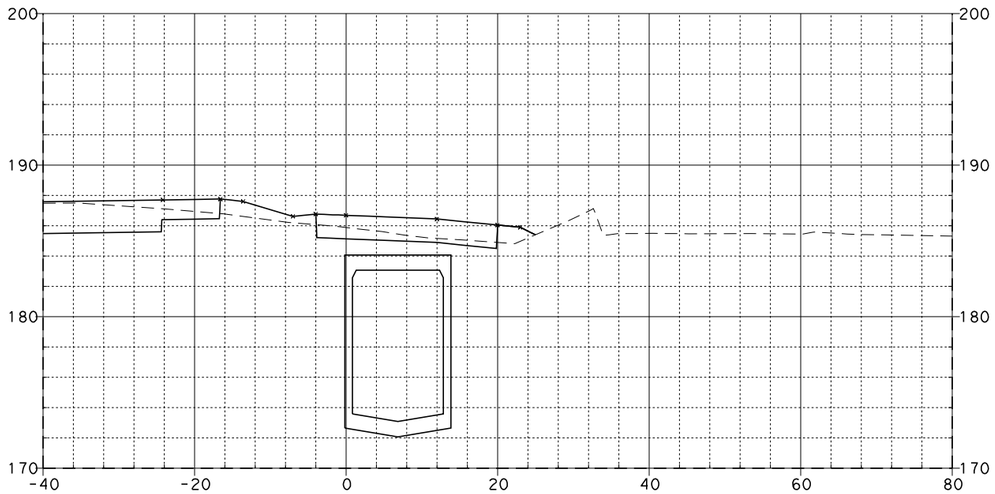

23+25.00

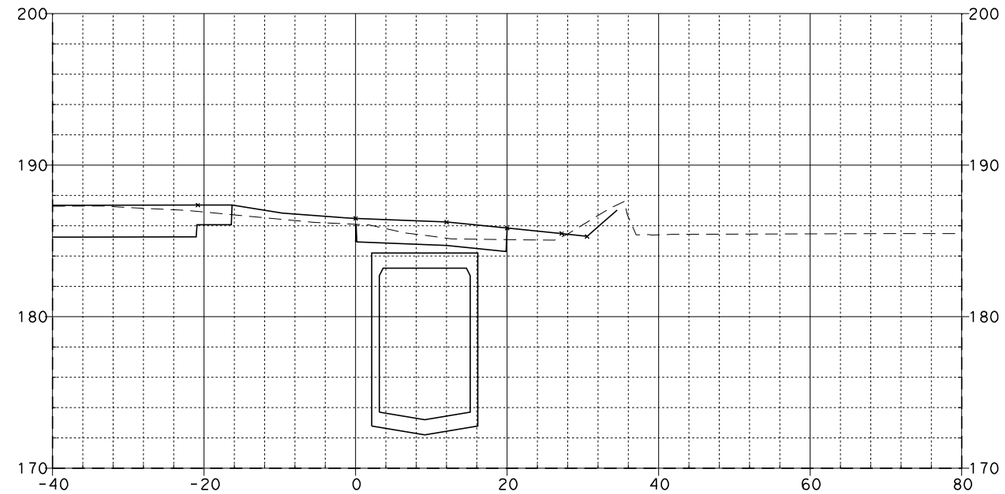

23+75.00

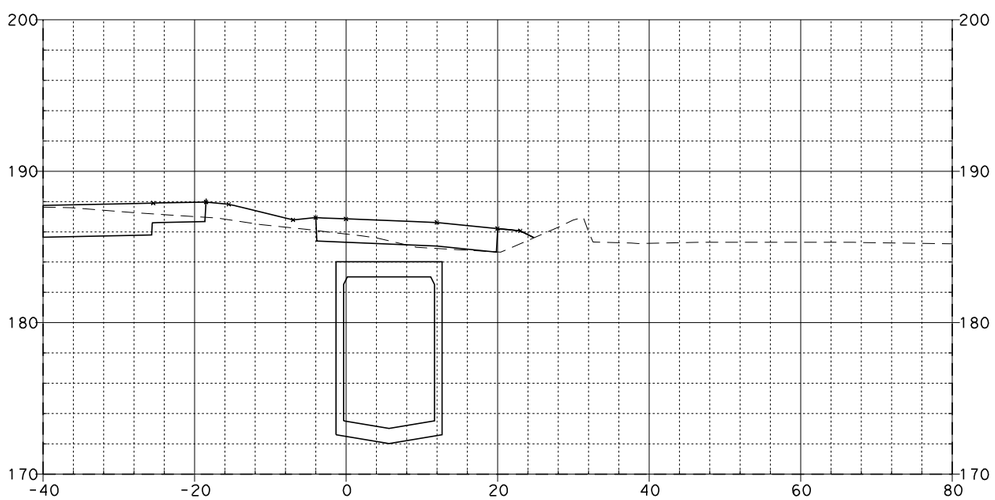

23+00.00

BALL ON-RAMP "D-3"

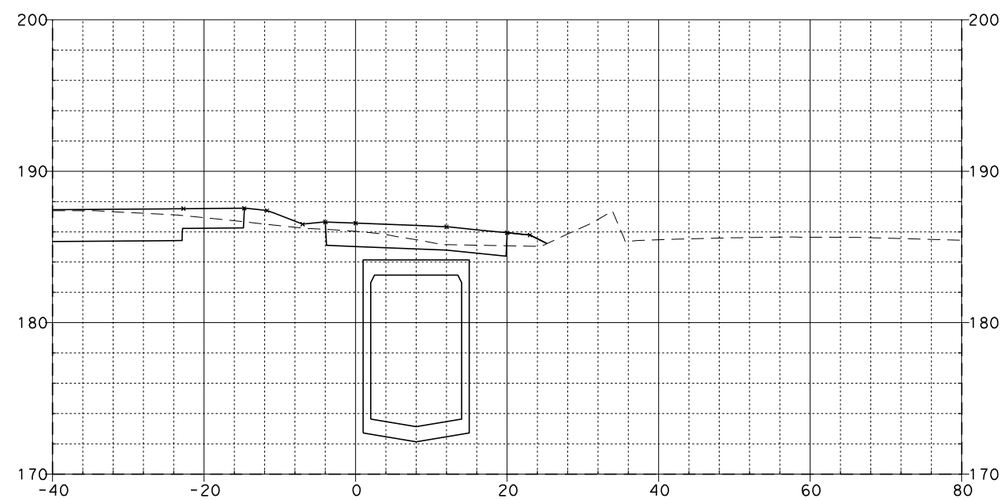

23+50.00

08\03\11

Dist	COUNTY	ROUTE	POST MILES TOTAL PROJECT	SHEET NO.	TOTAL SHEETS
12	Ora	57	12.2/15.2		

FOR EARTHWORK DEVELOPMENT ONLY

...\d0282599\Cross_Sections.dgn

EA 0F0401

SCALE: Horiz 1"=20'
Vert 1"=10'

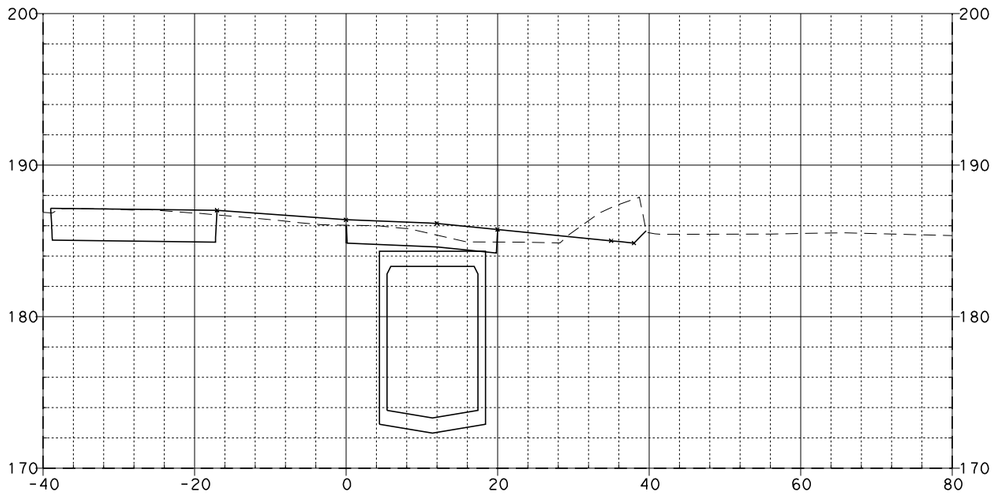

24+25.00

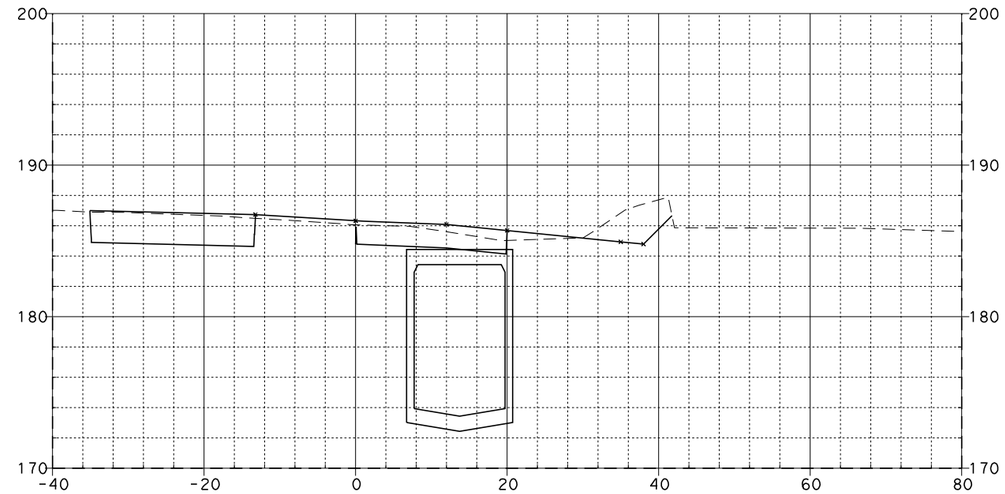

24+75.00

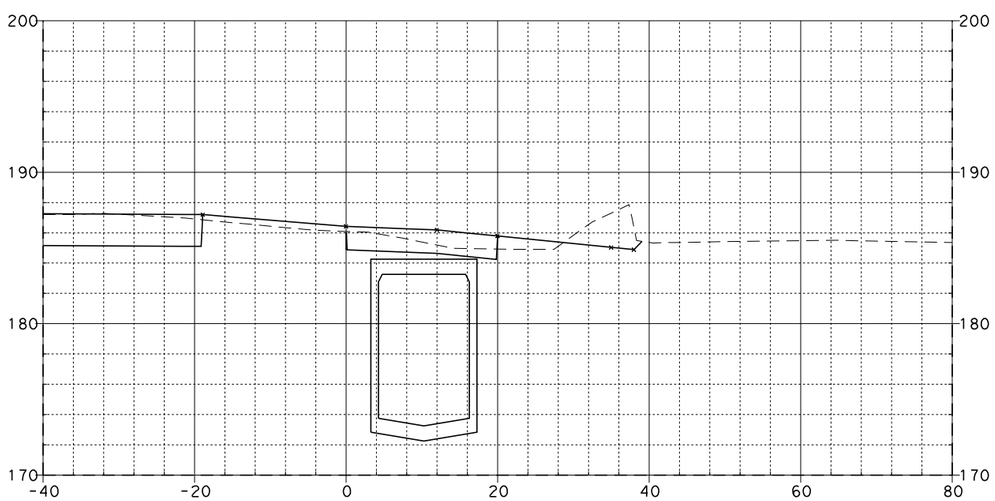

24+00.00

BALL ON-RAMP "D-3"

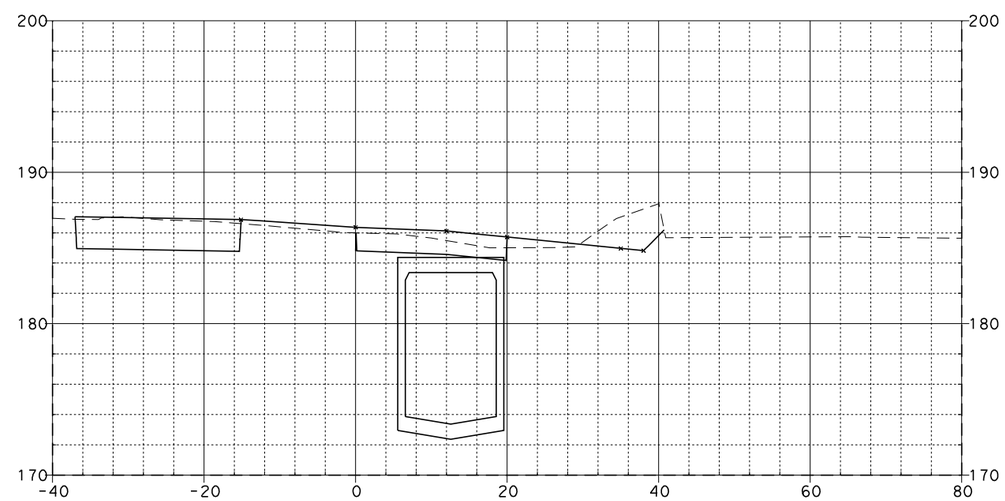

24+50.00

08\03\11

Dist	COUNTY	ROUTE	POST MILES TOTAL PROJECT	SHEET NO.	TOTAL SHEETS
12	Ora	57	12.2/15.2		

FOR EARTHWORK DEVELOPMENT ONLY

...\d0282599\Cross_Sections.dgn

EA 0F0401

SCALE: Horiz 1"=20'
Vert 1"=10'

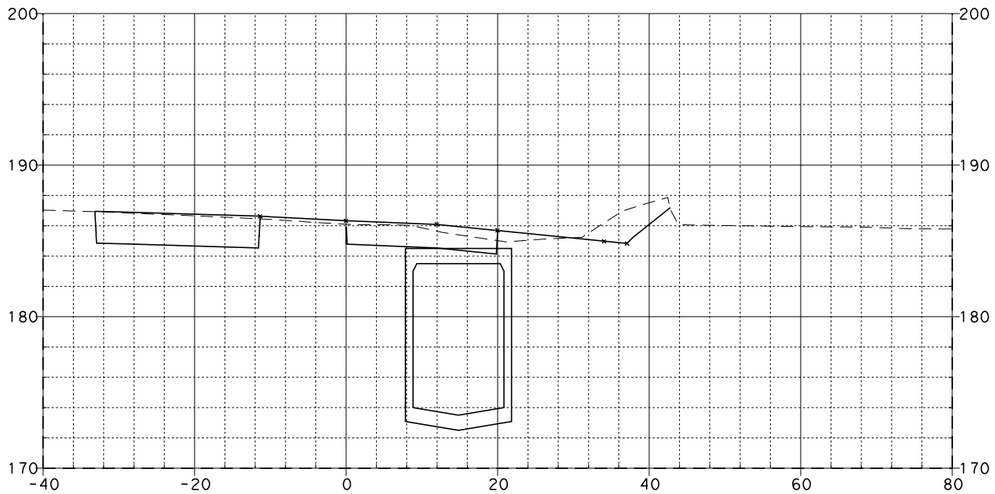

25+00.00

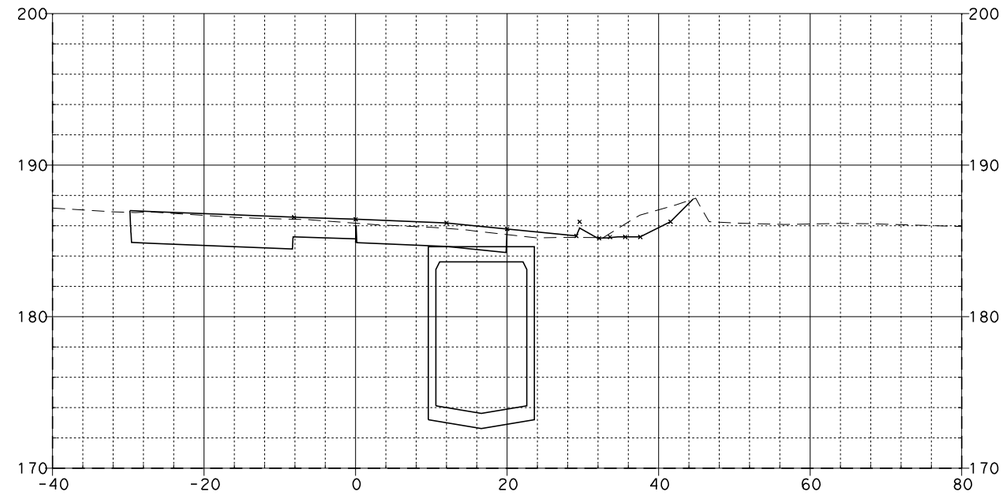

25+50.00

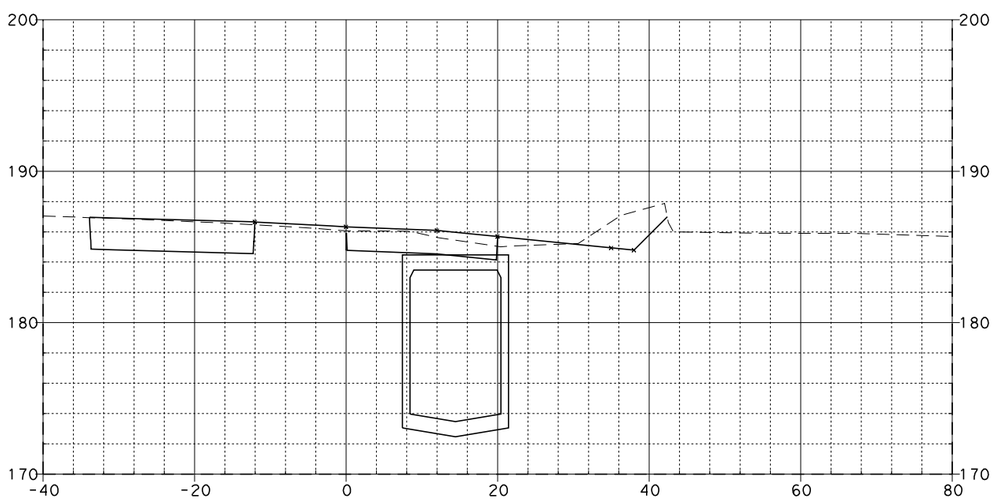

24+90.62

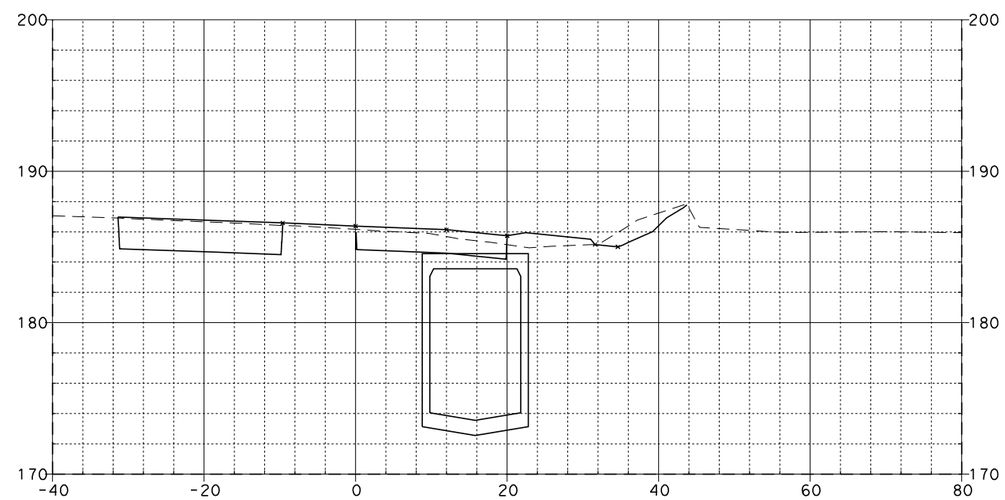

25+25.00

BALL ON-RAMP "D-3"

08\03\11

Dist	COUNTY	ROUTE	POST MILES TOTAL PROJECT	SHEET NO.	TOTAL SHEETS
12	Ora	57	12.2/15.2		

FOR EARTHWORK DEVELOPMENT ONLY

...\d0282599\Cross_Sections.dgn

EA 0F0401

SCALE: Horiz 1"=20'
Vert 1"=10'

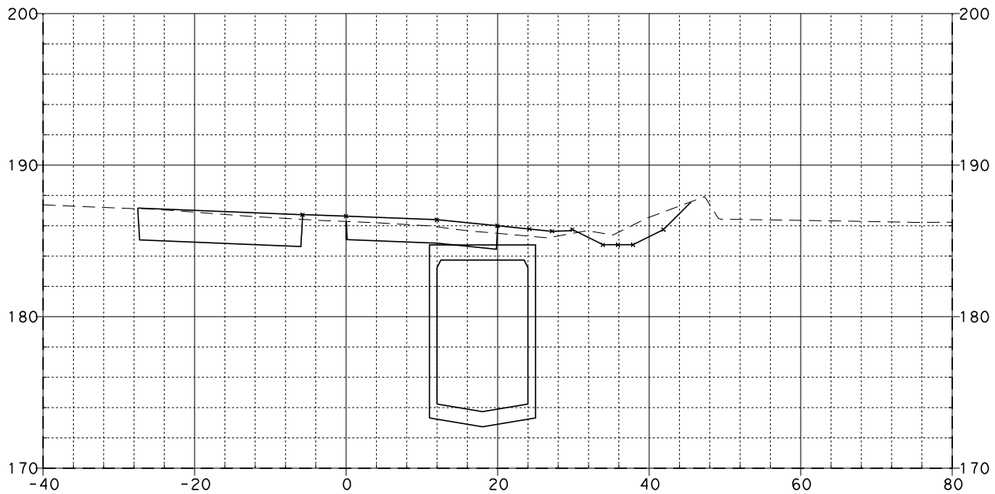

26+00.00

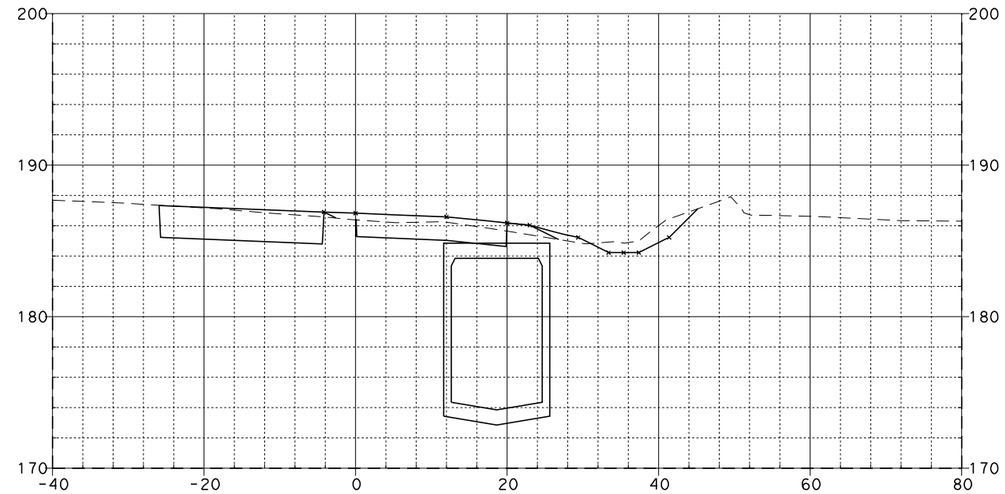

26+50.00

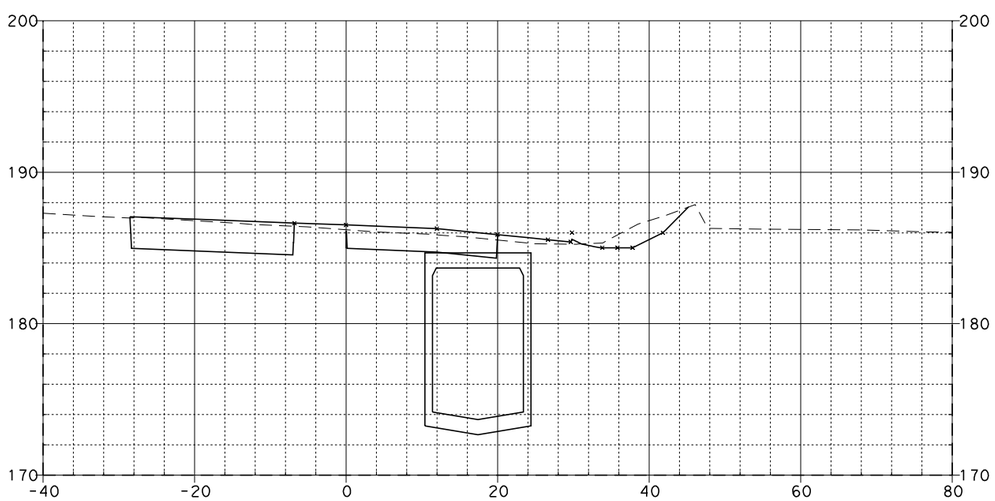

25+75.00

BALL ON-RAMP "D-3"

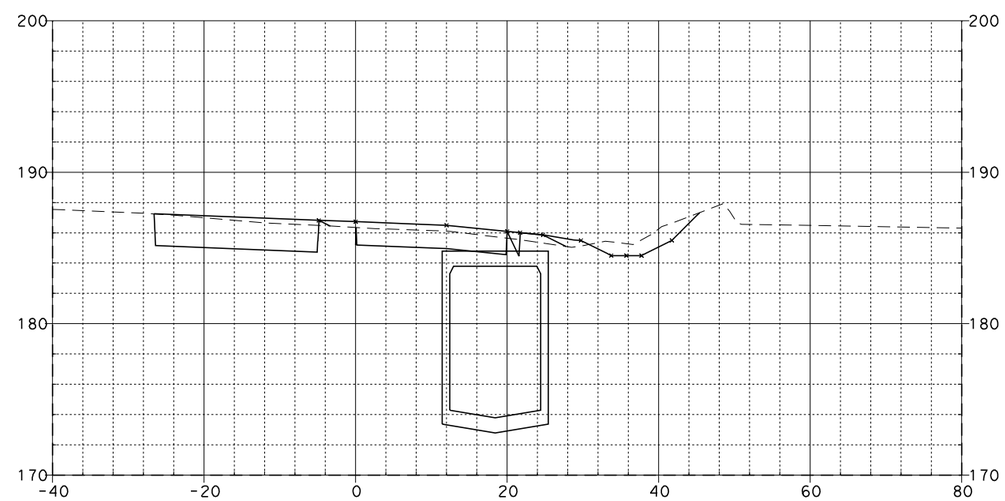

26+25.00

08\03\11

Dist	COUNTY	ROUTE	POST MILES TOTAL PROJECT	SHEET NO.	TOTAL SHEETS
12	Ora	57	12.2/15.2		

FOR EARTHWORK DEVELOPMENT ONLY

...\d0282599\Cross_Sections.dgn

EA 0F0401

SCALE: Horiz 1"=20'
Vert 1"=10'

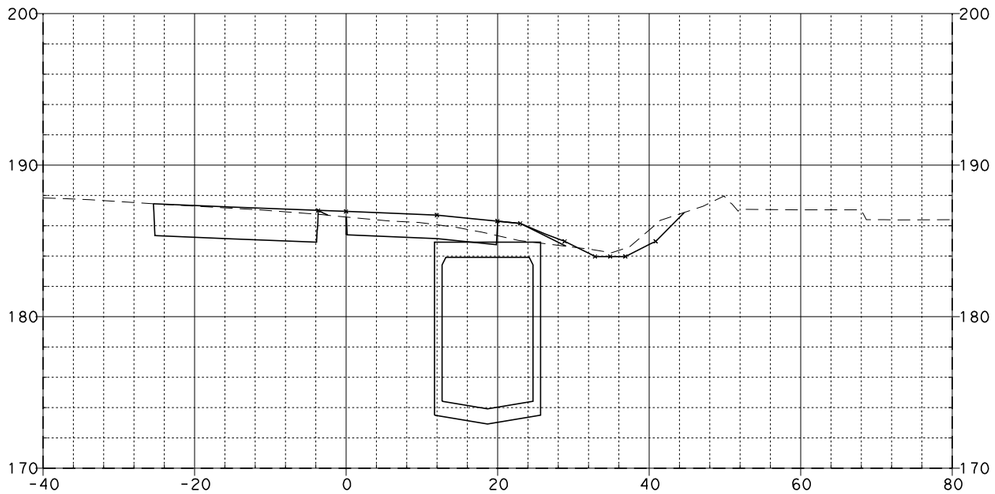

26+75.00

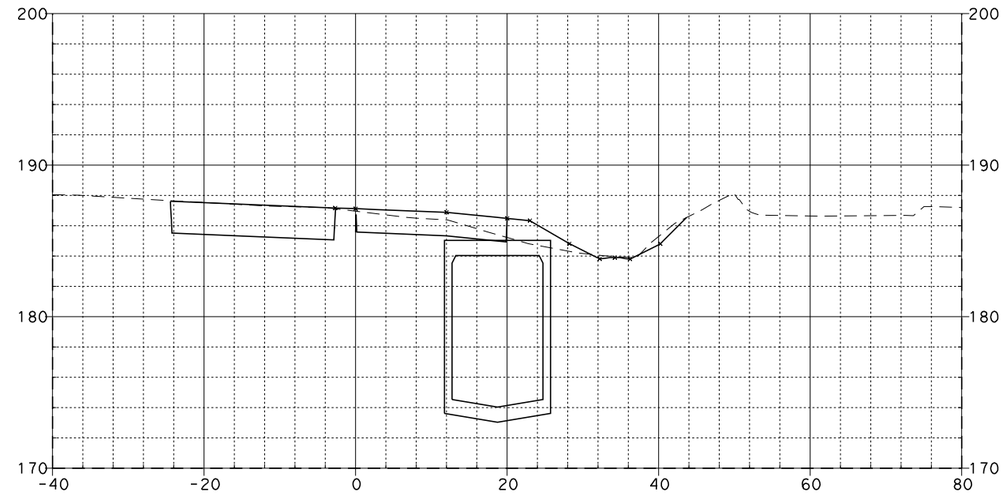

27+25.00

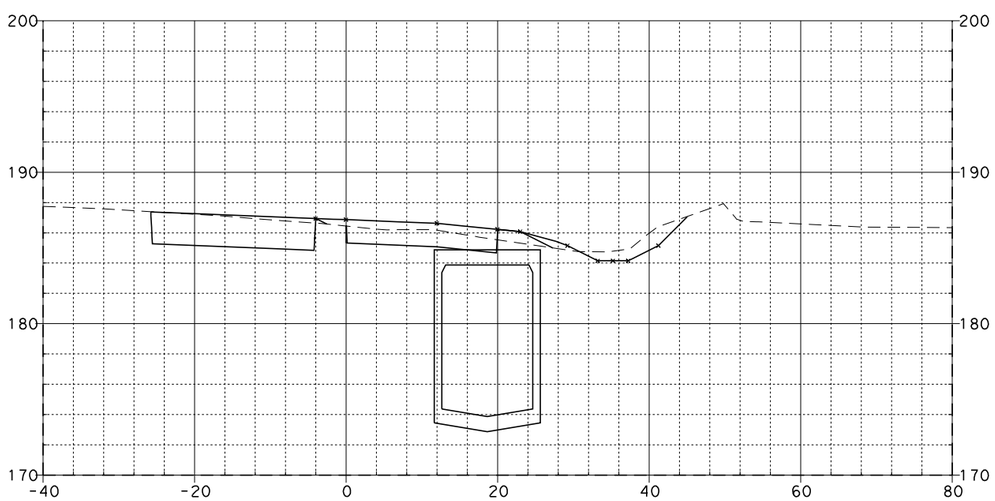

26+57.94

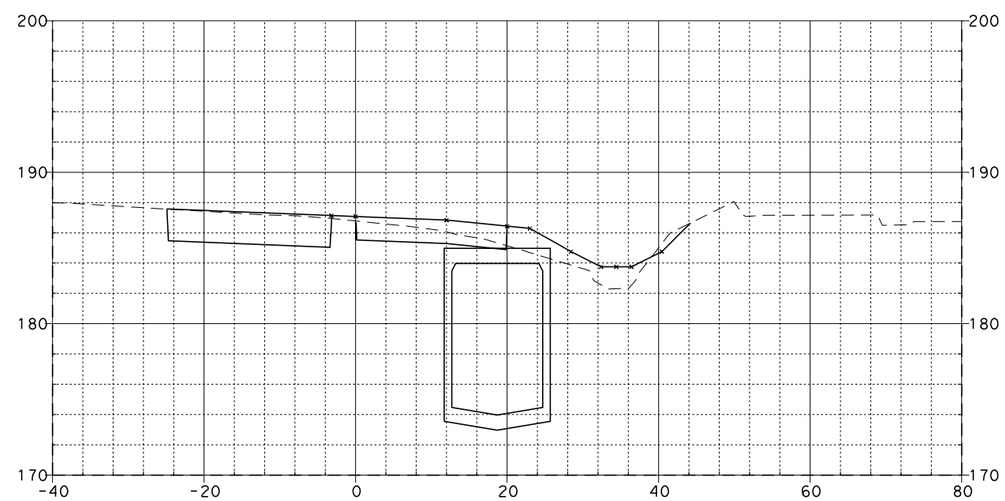

27+00.00

BALL ON-RAMP "D-3"

08\03\11

Dist	COUNTY	ROUTE	POST MILES TOTAL PROJECT	SHEET NO.	TOTAL SHEETS
12	Ora	57	12.2/15.2		

FOR EARTHWORK DEVELOPMENT ONLY

...\d0282599\Cross_Sections.dgn

EA 0F0401

SCALE: Horiz 1"=20'
Vert 1"=10'

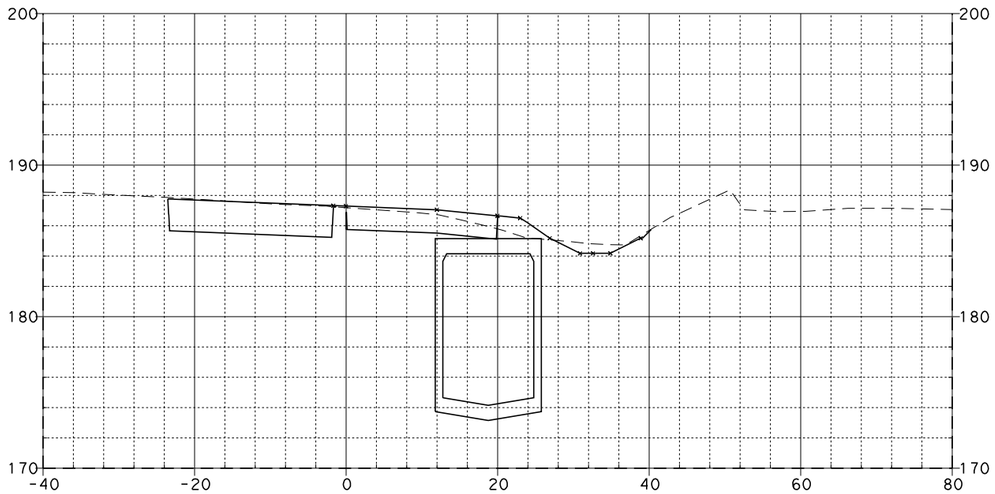

27+75.00

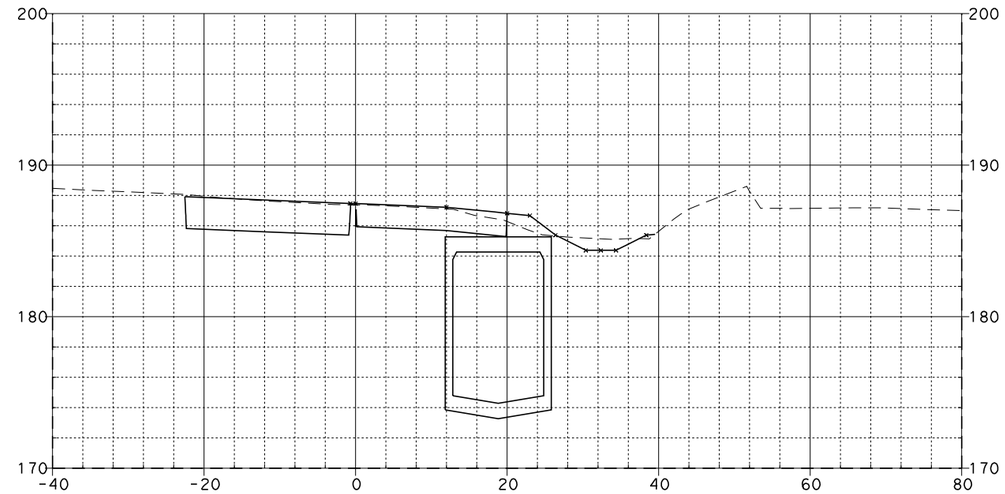

28+25.00

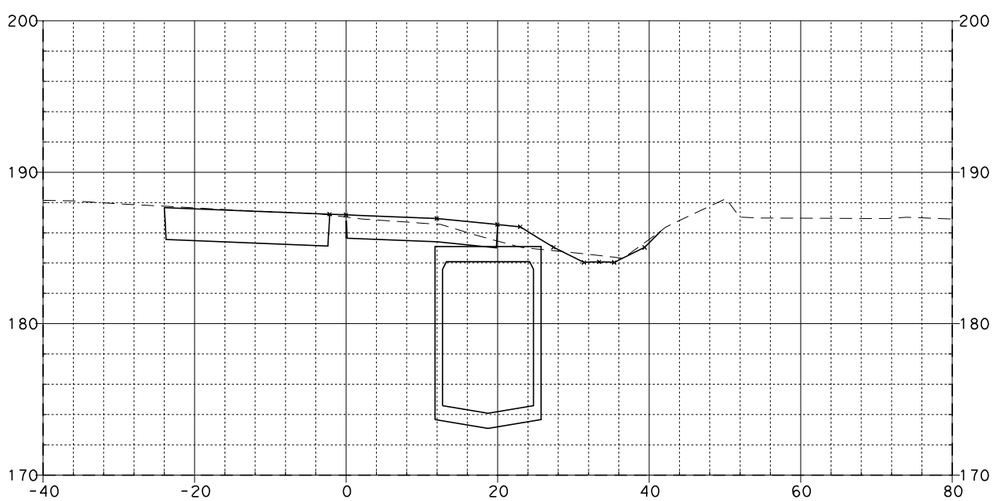

27+50.00

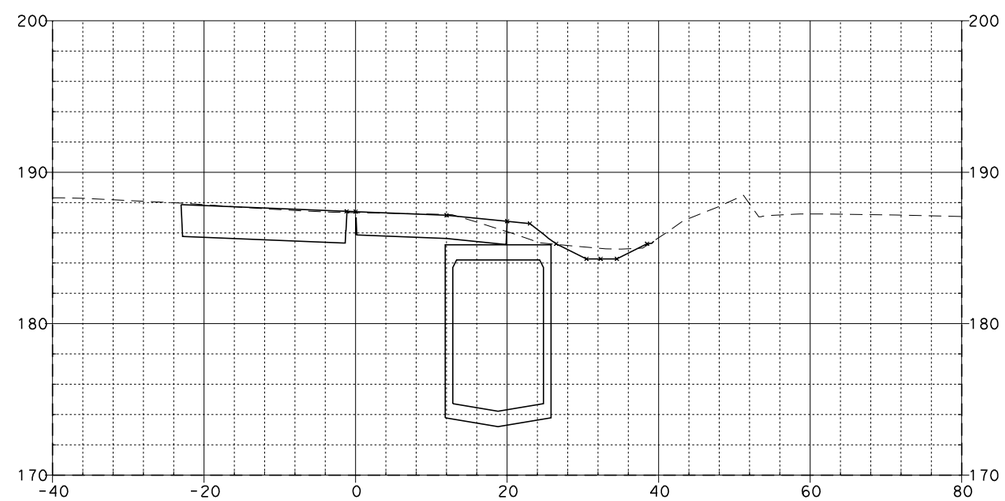

28+00.00

BALL ON-RAMP "D-3"

08\03\11

Dist	COUNTY	ROUTE	POST MILES TOTAL PROJECT	SHEET NO.	TOTAL SHEETS
12	Ora	57	12.2/15.2		

FOR EARTHWORK DEVELOPMENT ONLY

...\d0282599\Cross_Sections.dgn

EA 0F0401

SCALE: Horiz 1"=20'
Vert 1"=10'

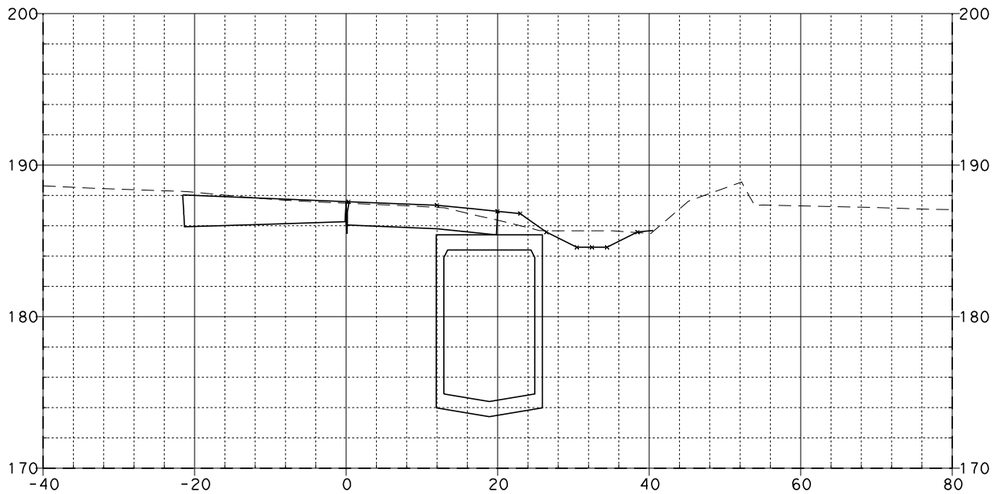

28+75.00

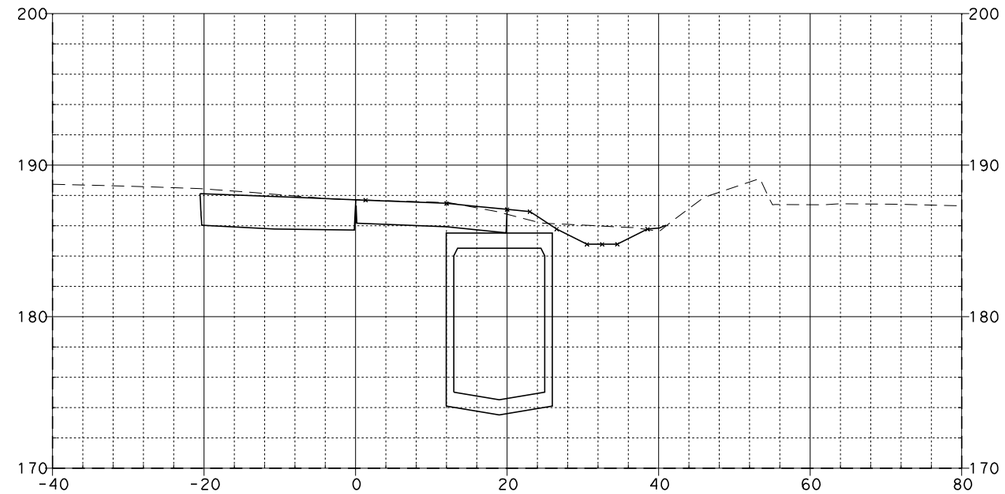

29+25.00

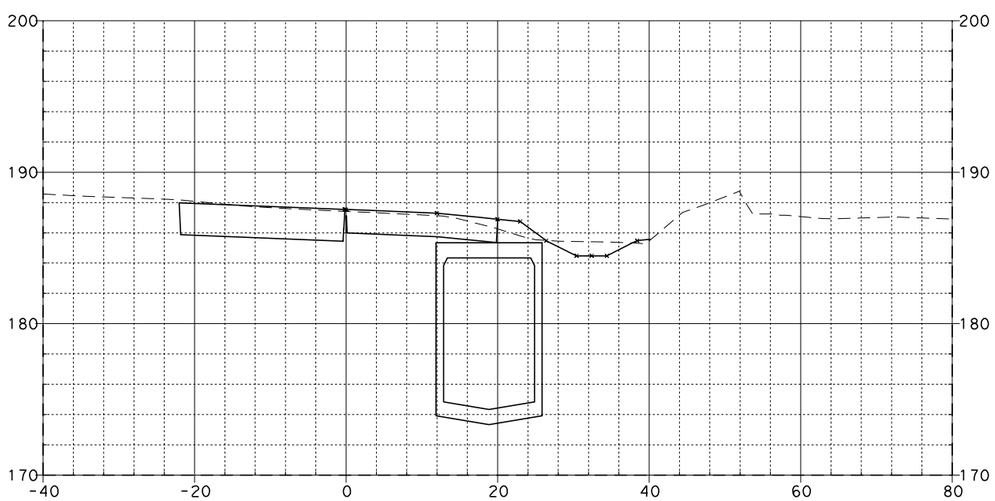

28+50.00

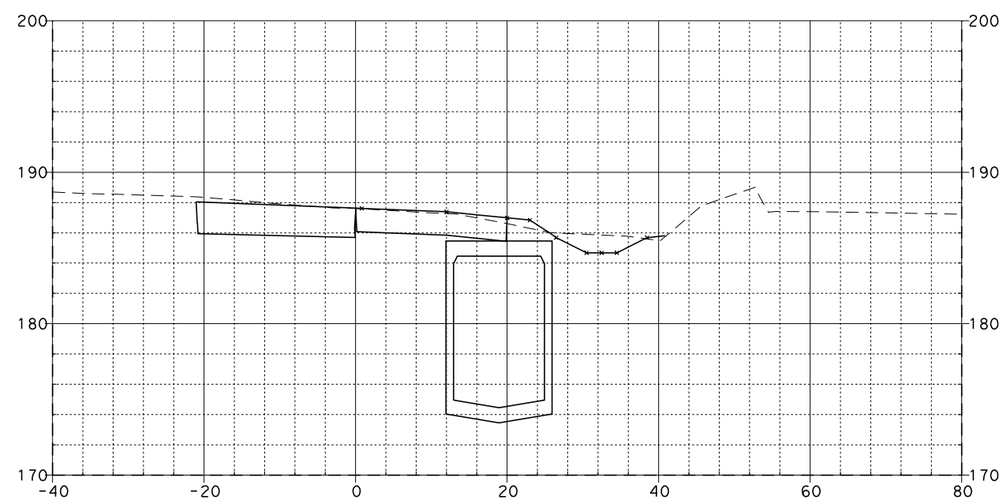

29+00.00

BALL ON-RAMP "D-3"

08\03\11

Dist	COUNTY	ROUTE	POST MILES TOTAL PROJECT	SHEET NO.	TOTAL SHEETS
12	Ora	57	12.2/15.2		

FOR EARTHWORK DEVELOPMENT ONLY

...\d0282599\Cross_Sections.dgn

EA 0F0401

SCALE: Horiz 1"=20'
Vert 1"=10'

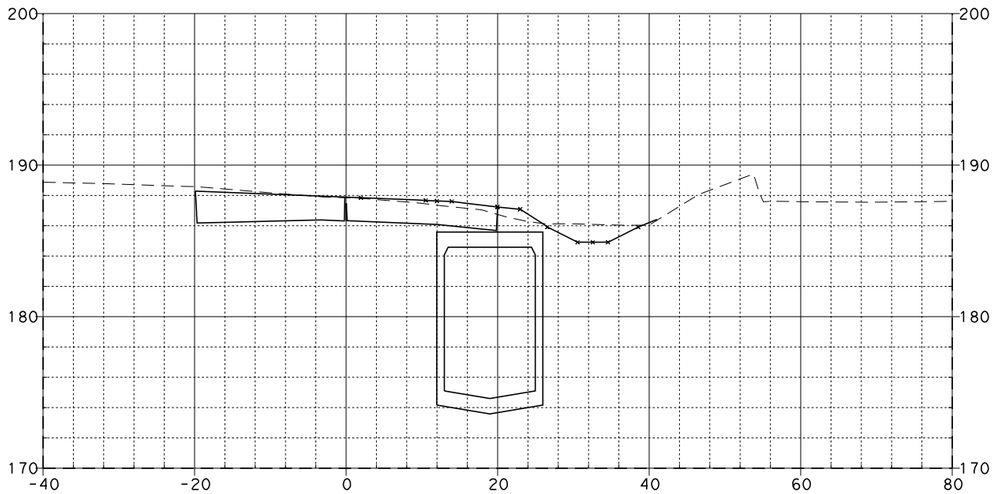

29+58.00

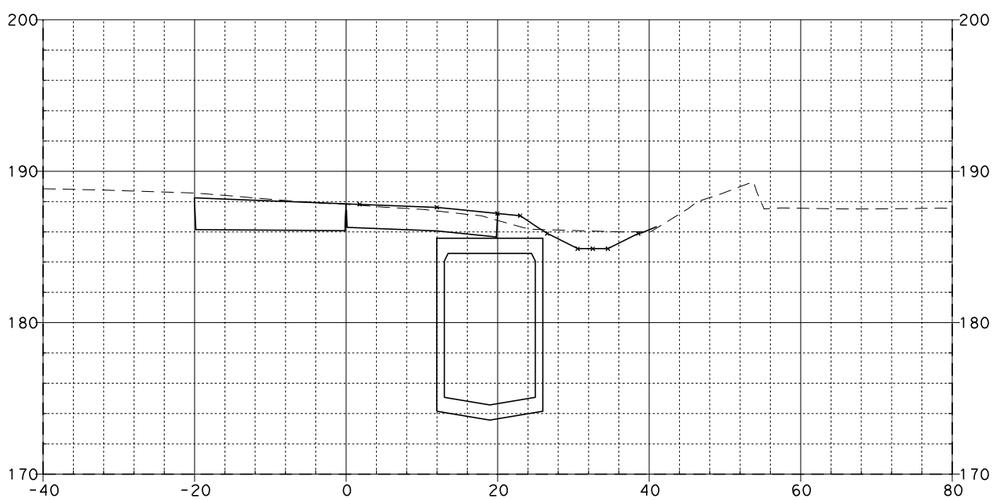

29+50.00

BALL ON-RAMP "D-3"

08\03\11

Dist	COUNTY	ROUTE	POST MILES TOTAL PROJECT	SHEET NO.	TOTAL SHEETS
12	Ora	57	12.2/15.2		

FOR EARTHWORK DEVELOPMENT ONLY

...\d0282599\Cross_Sections.dgn

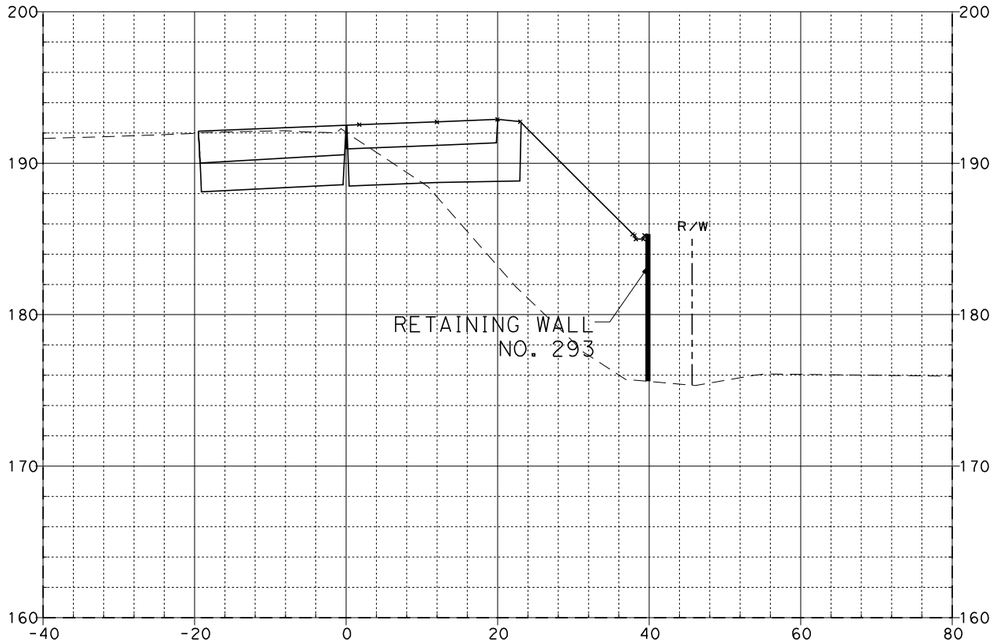

2+00.00

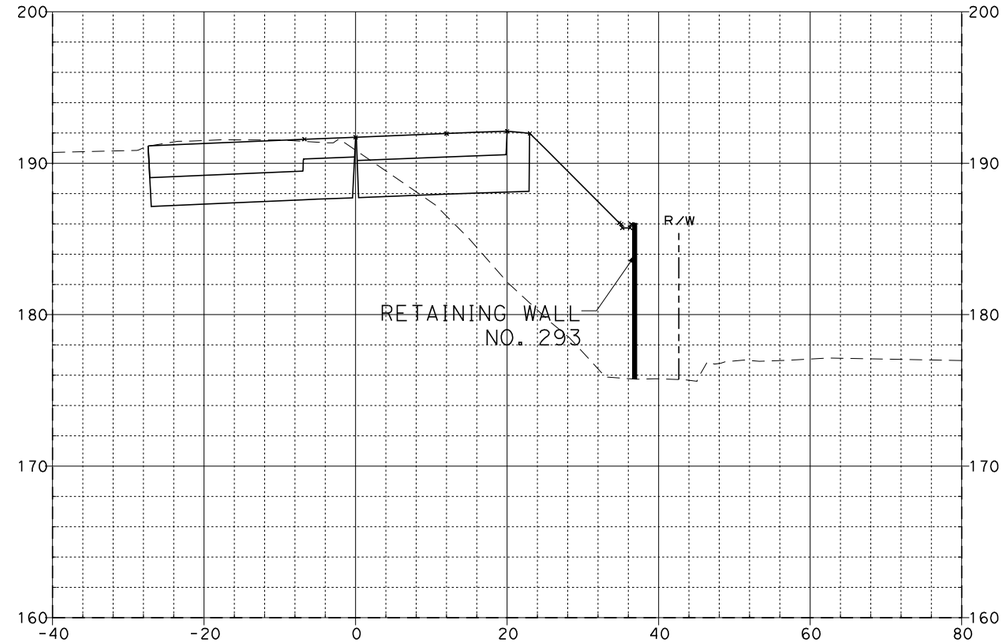

3+00.00

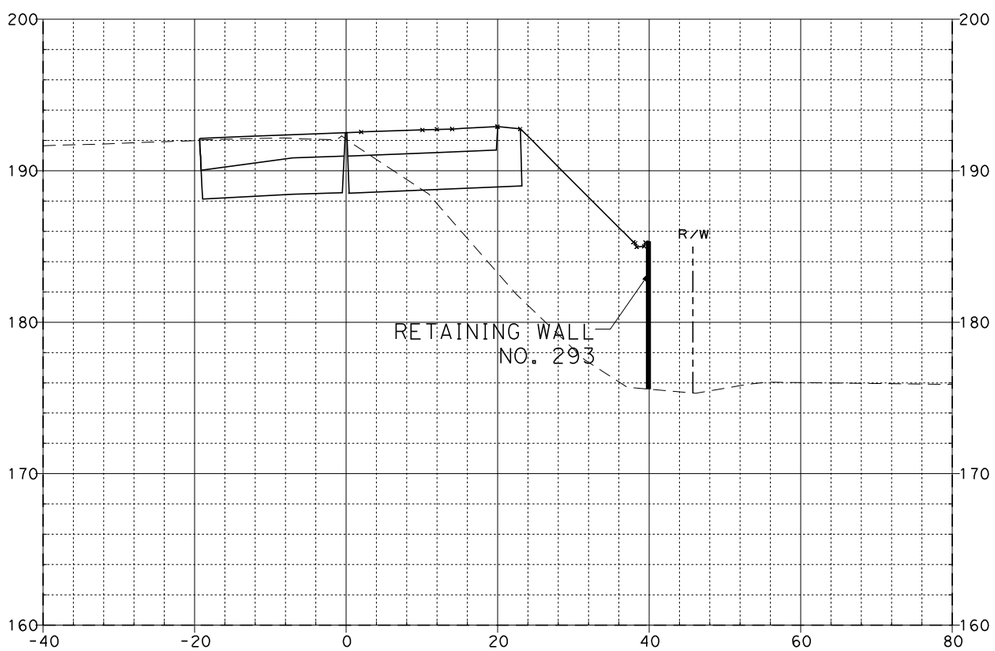

1+97.00

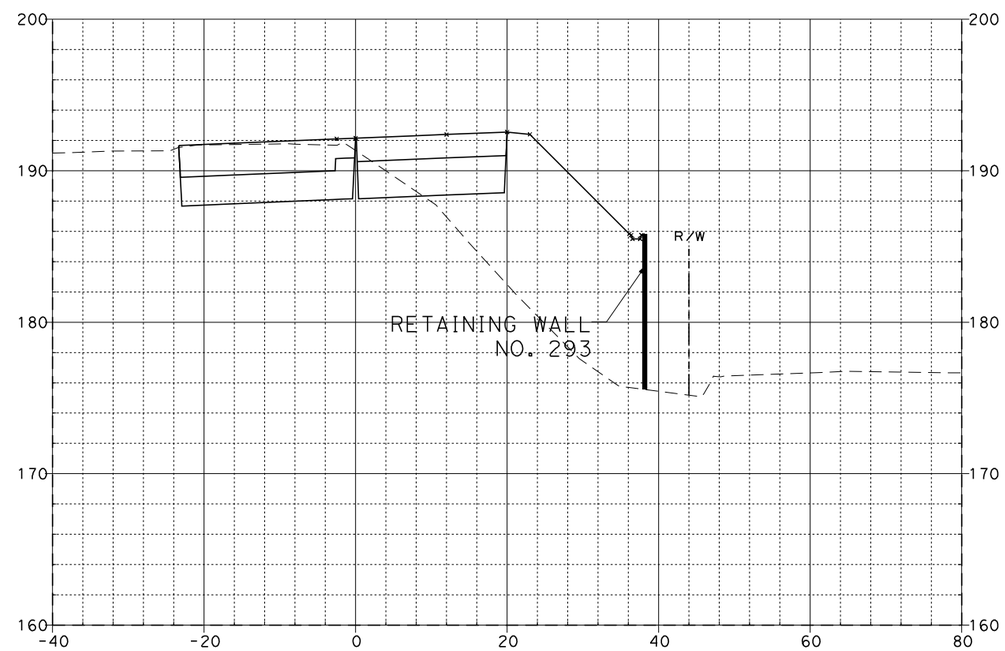

2+50.00

BALL OFF-RAMP "D-4"

EA 0F0401

SCALE: Horiz 1"=20'
Vert 1"=10'

08\03\11

Dist	COUNTY	ROUTE	POST MILES TOTAL PROJECT	SHEET No.	TOTAL SHEETS
12	Ora	57	12.2/15.2		

FOR EARTHWORK DEVELOPMENT ONLY

...\d0282599\Cross_Sections.dgn

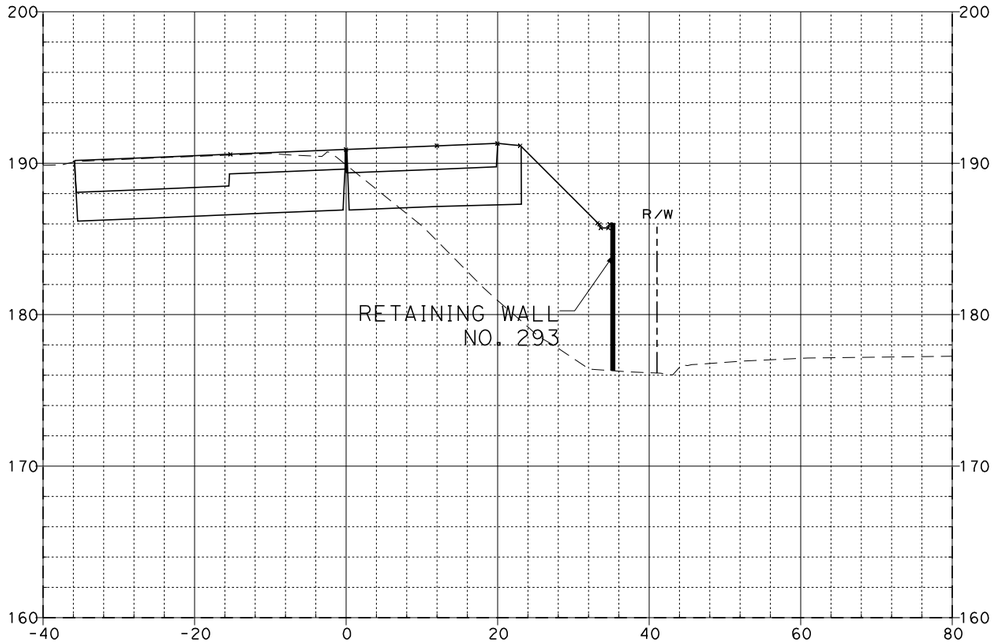

4+00.00

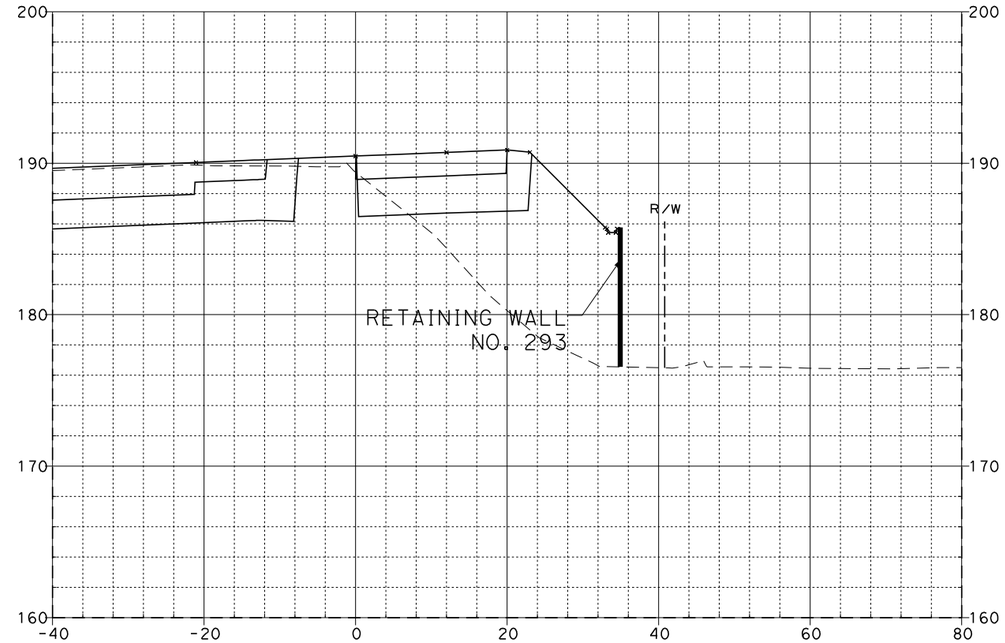

4+68.41

3+50.00

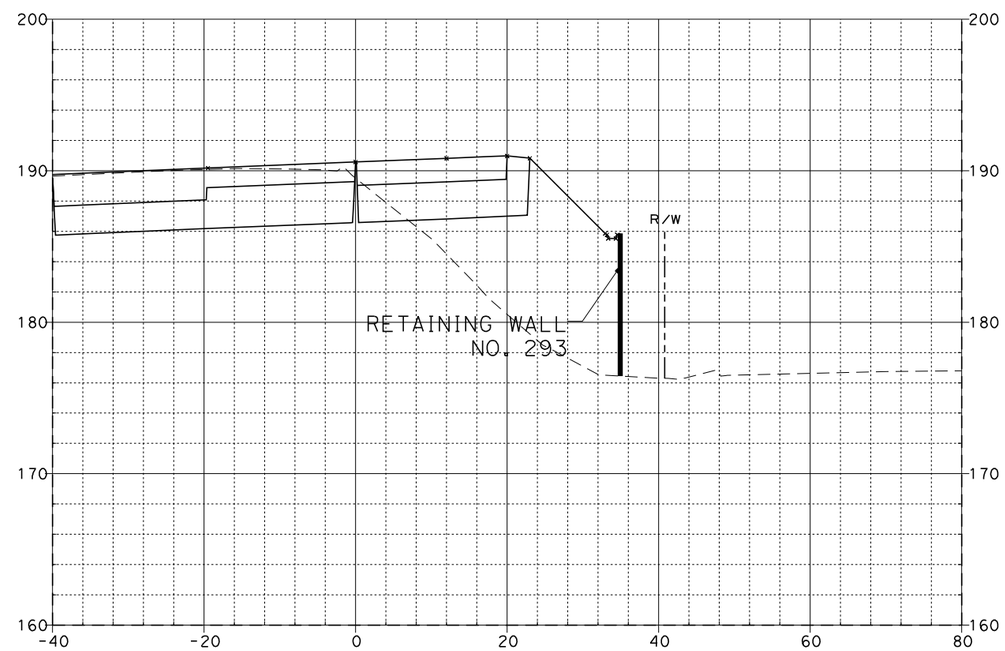

4+50.00

BALL OFF-RAMP "D-4"

EA 0F0401

SCALE: Horiz 1"=20'
Vert 1"=10'

08\03\11

Dist	COUNTY	ROUTE	POST MILES TOTAL PROJECT	SHEET No.	TOTAL SHEETS
12	Ora	57	12.2/15.2		

FOR EARTHWORK DEVELOPMENT ONLY

...\d0282599\Cross_Sections.dgn

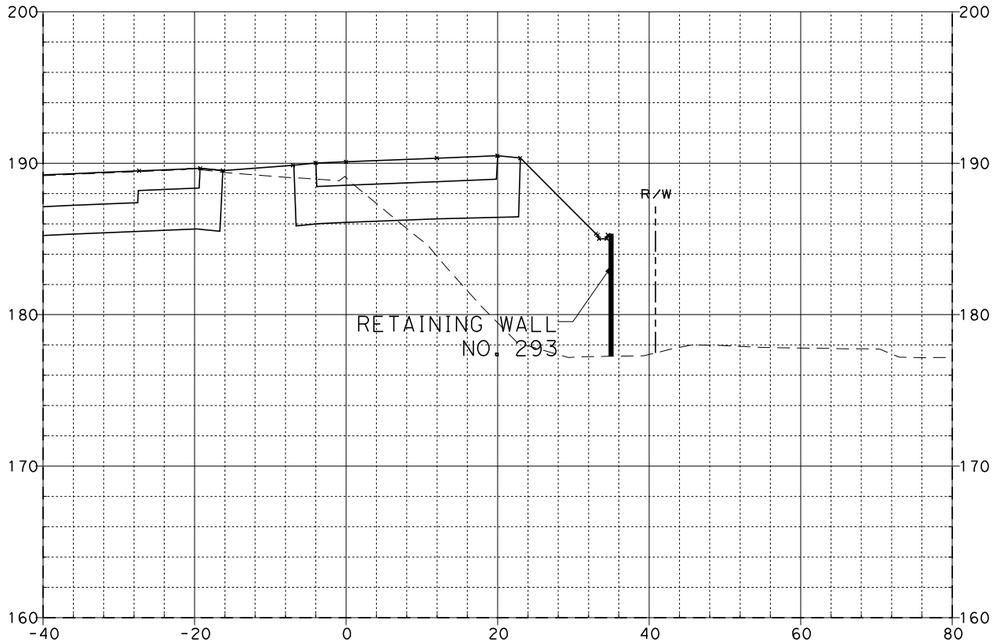

5+37.44

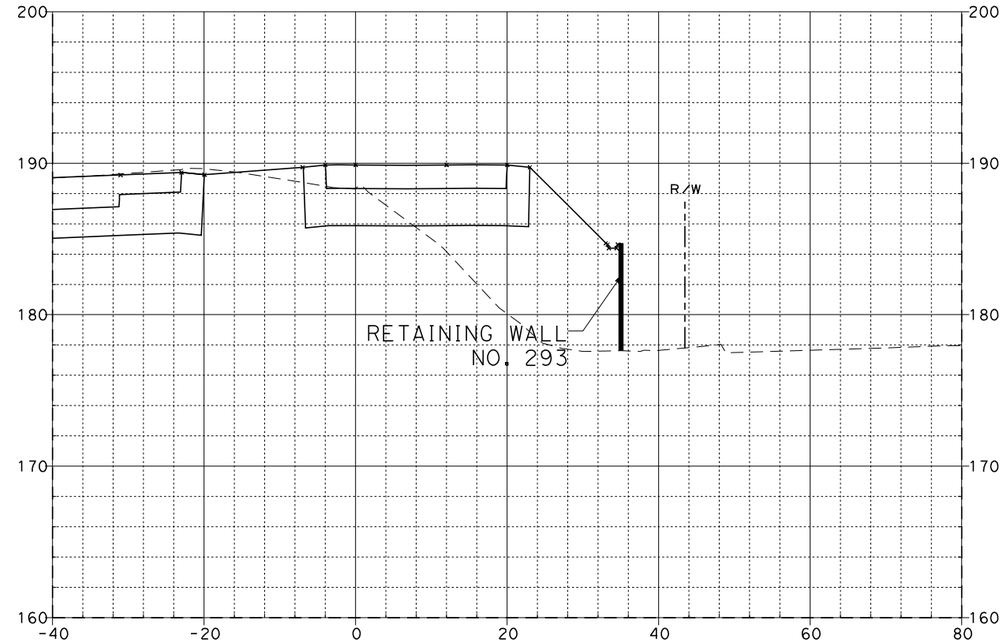

5+75.62

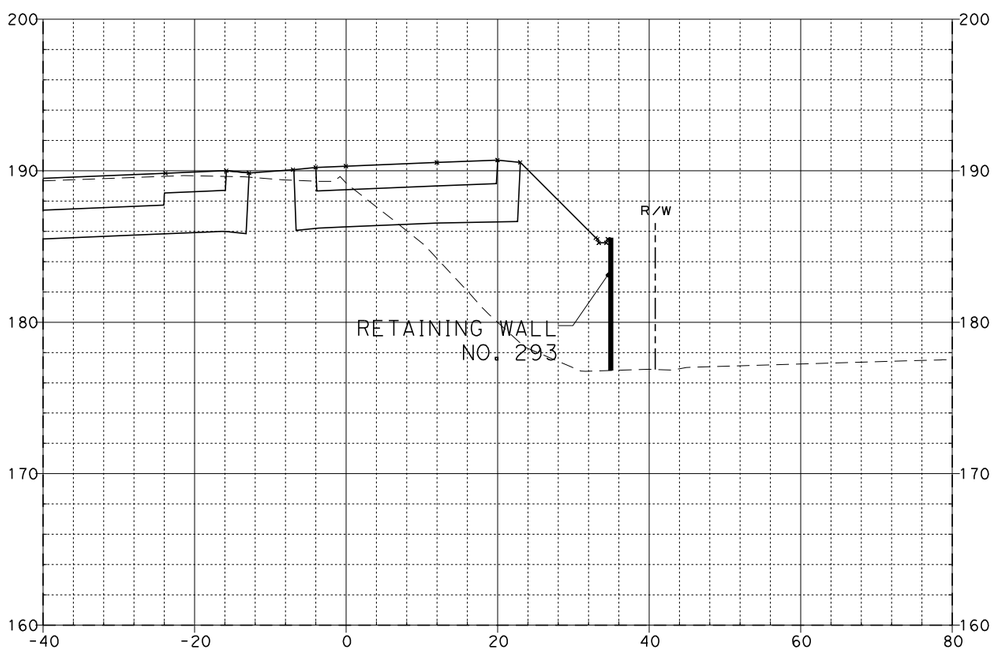

5+00.00

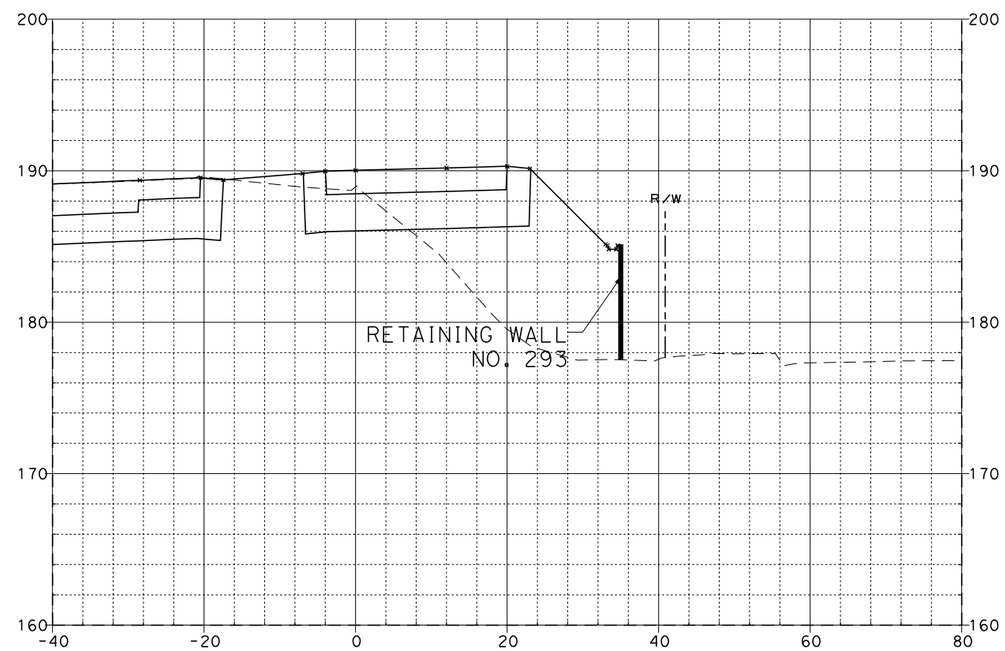

5+50.00

BALL OFF-RAMP "D-4"

EA 0F0401

SCALE: Horiz 1"=20'
Vert 1"=10'

08\03\11

Dist	COUNTY	ROUTE	POST MILES TOTAL PROJECT	SHEET No.	TOTAL SHEETS
12	Ora	57	12.2/15.2		

FOR EARTHWORK DEVELOPMENT ONLY

...\d0282599\Cross_Sections.dgn

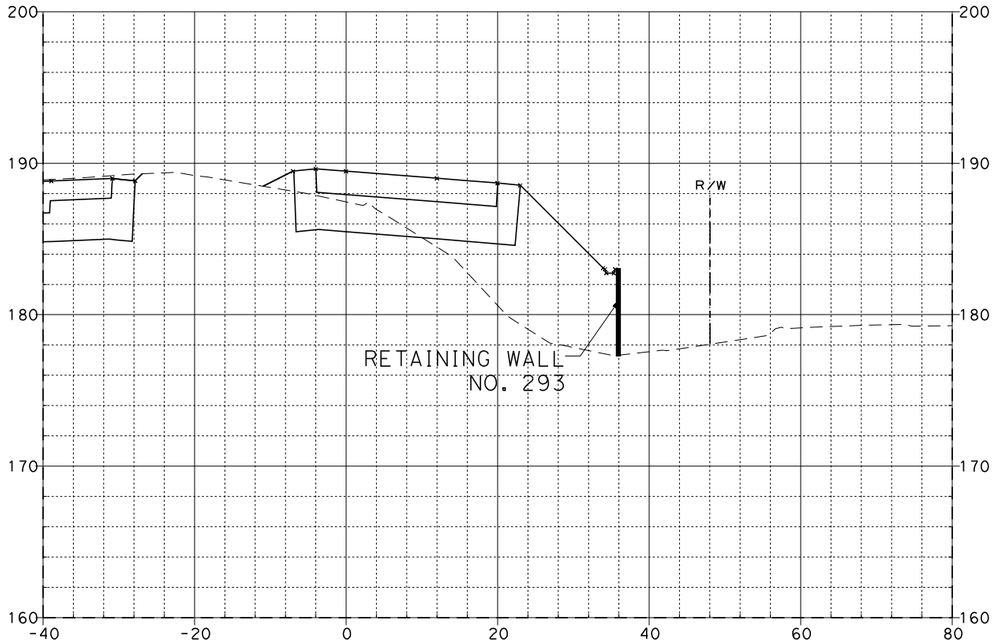

6+50.00

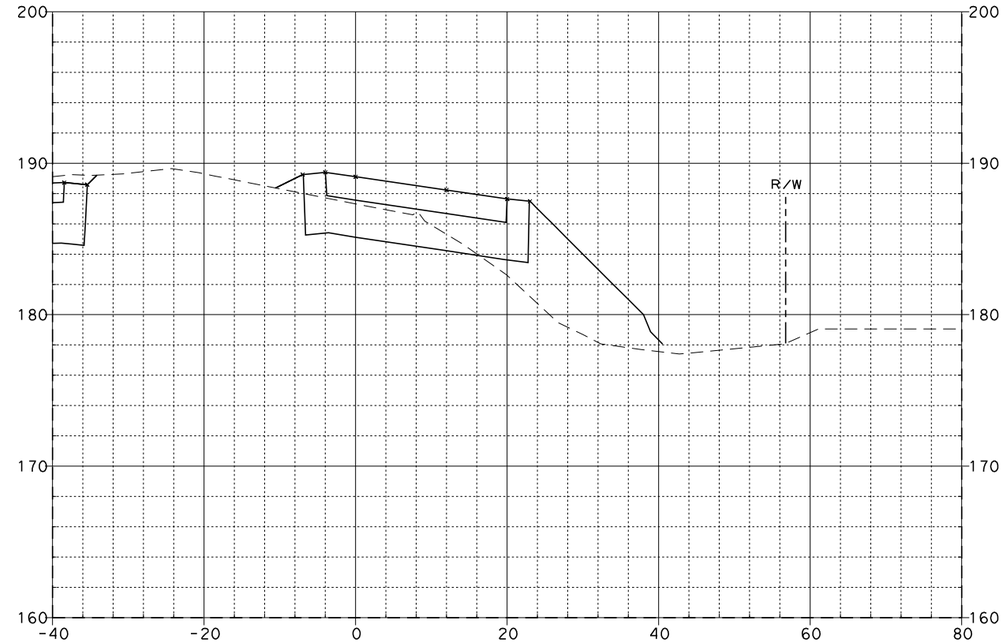

7+15.62

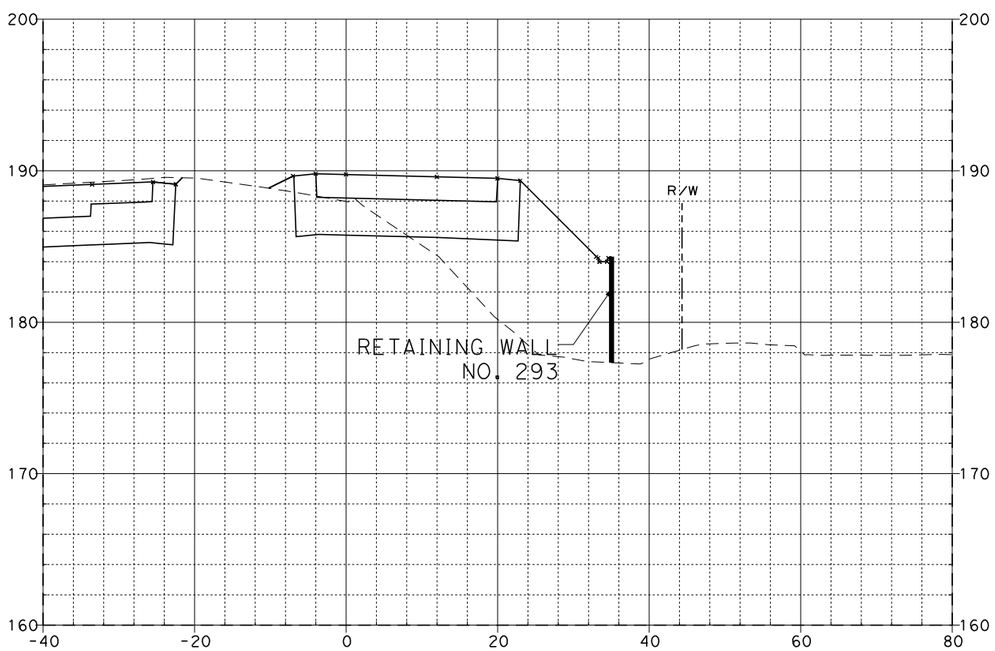

6+00.00

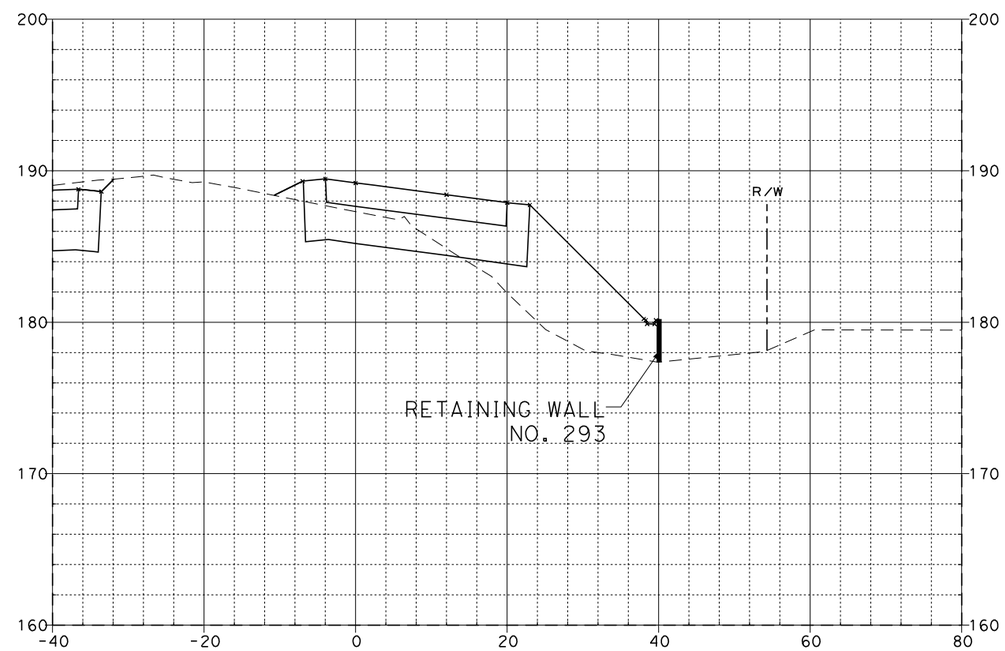

7+00.00

BALL OFF-RAMP "D-4"

EA 0F0401

SCALE: Horiz 1"=20'
Vert 1"=10'

08\03\11

Dist	COUNTY	ROUTE	POST MILES TOTAL PROJECT	SHEET No.	TOTAL SHEETS
12	Ora	57	12.2/15.2		

FOR EARTHWORK DEVELOPMENT ONLY

...\d0282599\Cross_Sections.dgn

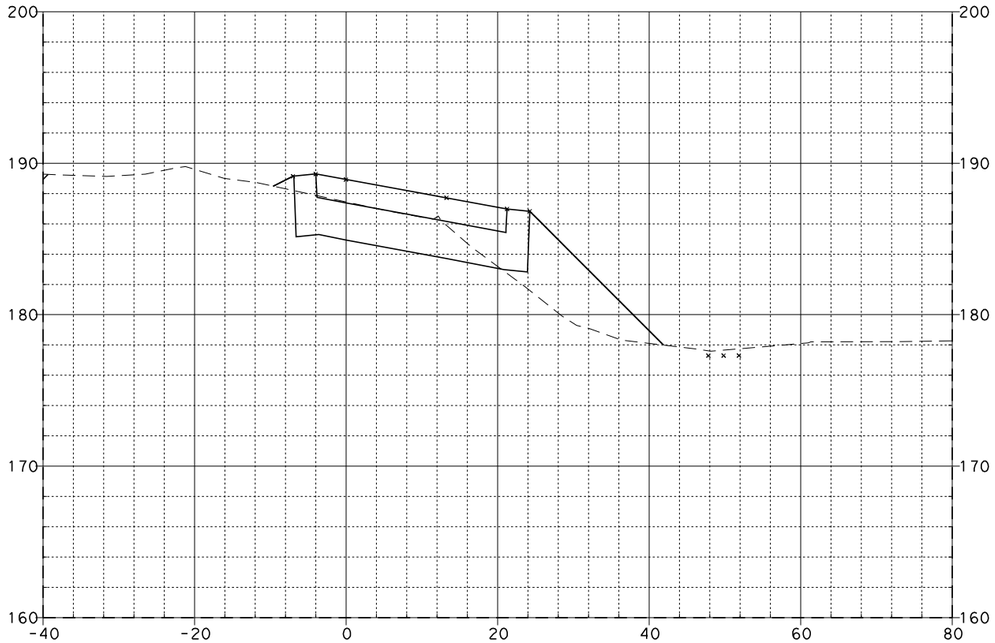

7+50.00

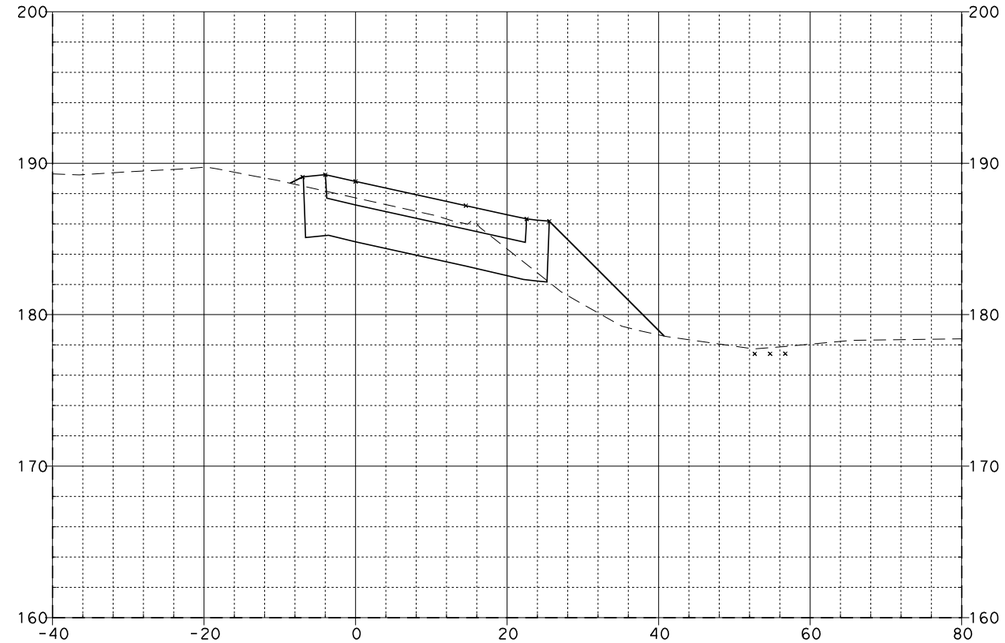

7+85.62

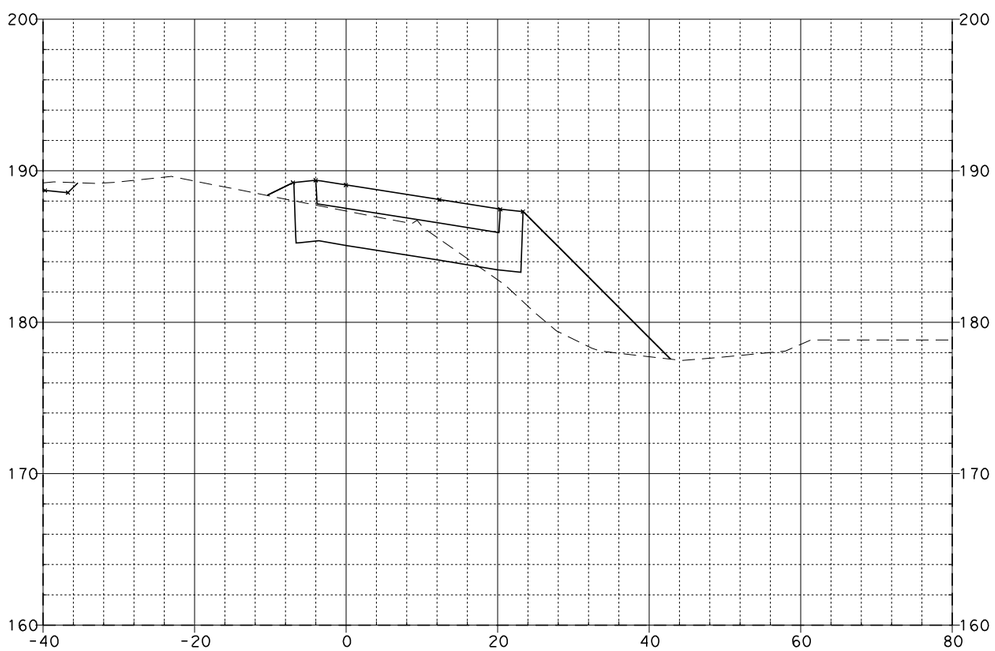

7+25.00

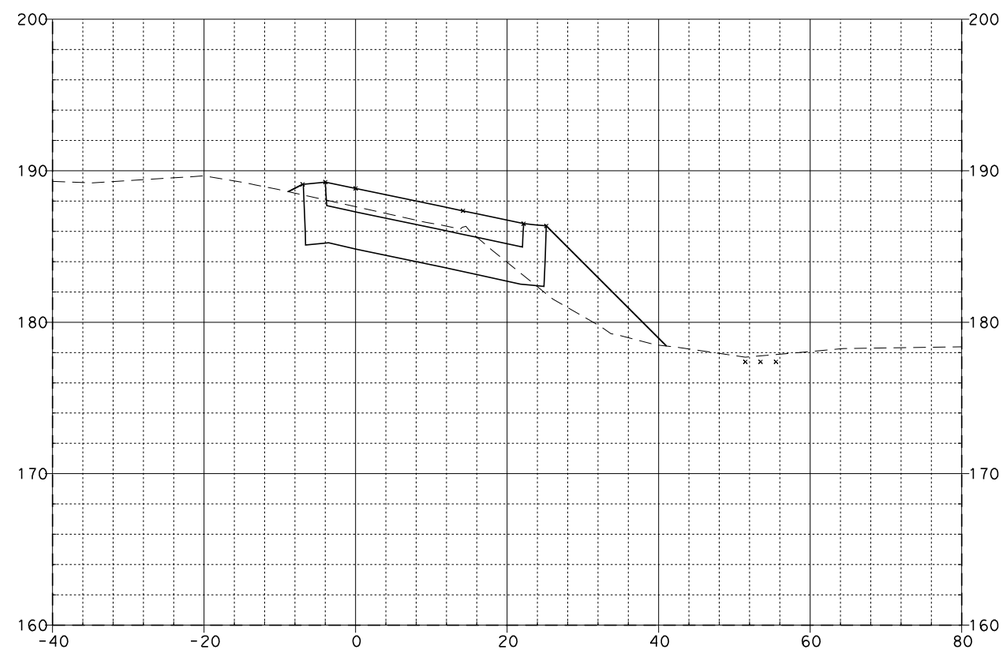

7+75.00

BALL OFF-RAMP "D-4"

EA 0F0401

SCALE: Horiz 1"=20'
Vert 1"=10'

08\03\11

Dist	COUNTY	ROUTE	POST MILES TOTAL PROJECT	SHEET No.	TOTAL SHEETS
12	Ora	57	12.2/15.2		

FOR EARTHWORK DEVELOPMENT ONLY

...\d0282599\Cross_Sections.dgn

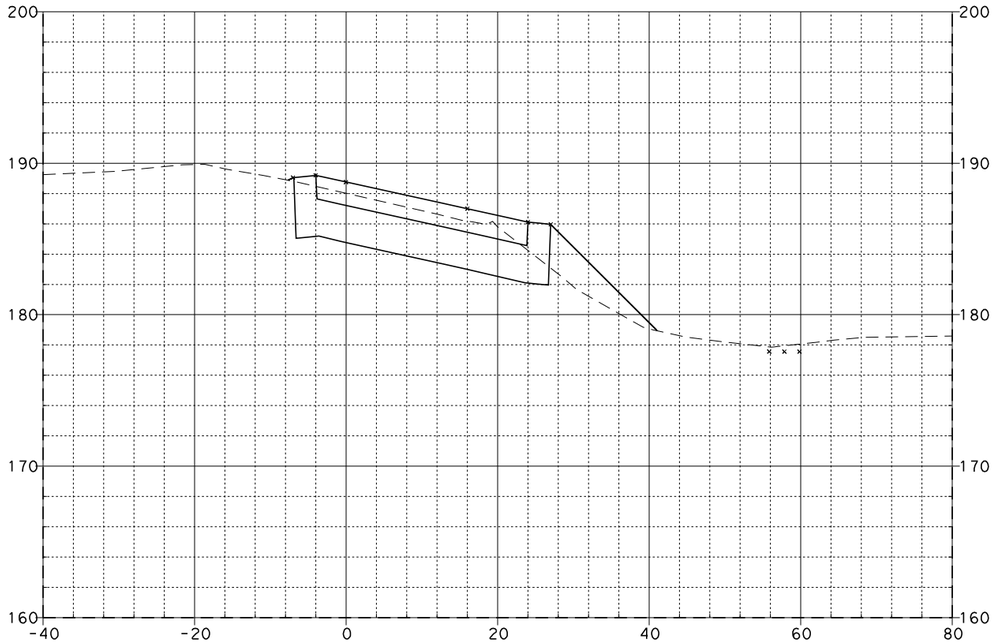

8+25.00

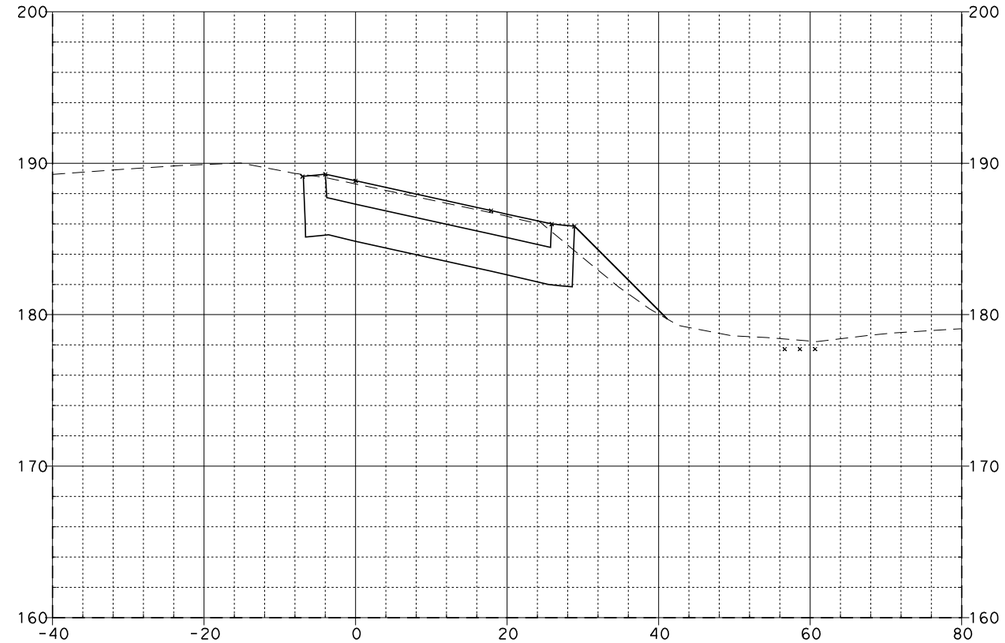

8+75.00

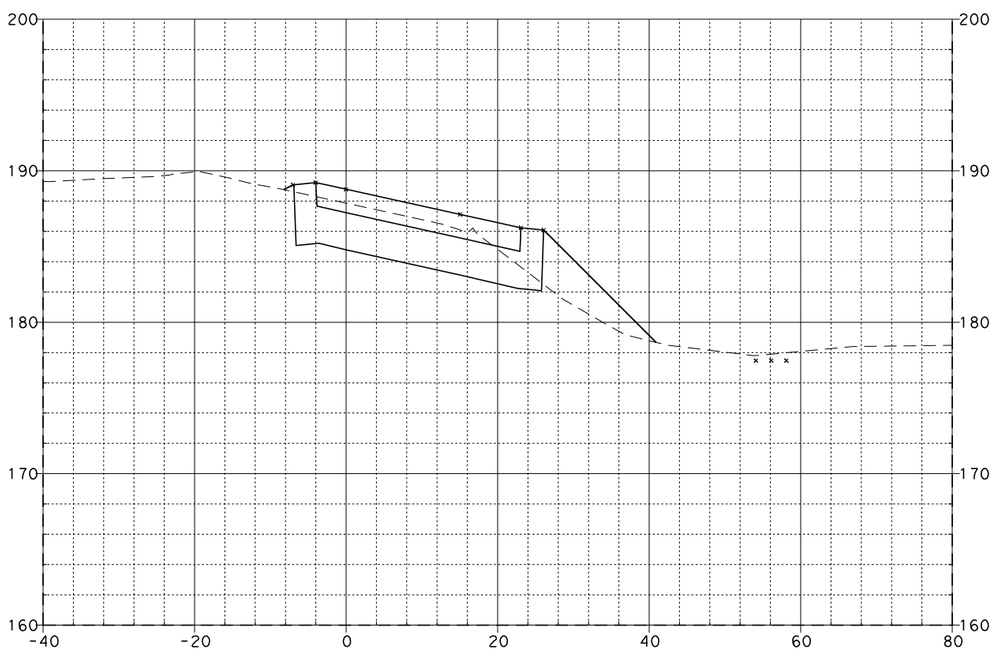

8+00.00

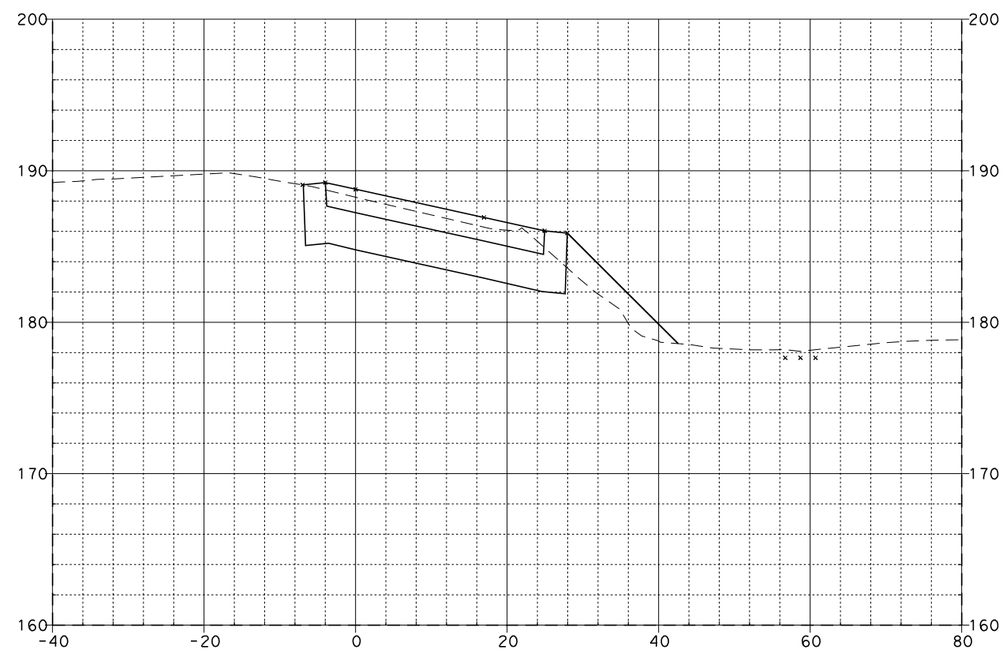

8+50.00

BALL OFF-RAMP "D-4"

EA 0F0401

SCALE: Horiz 1"=20'
Vert 1"=10'

08\03\11

Dist	COUNTY	ROUTE	POST MILES TOTAL PROJECT	SHEET No.	TOTAL SHEETS
12	Ora	57	12.2/15.2		

FOR EARTHWORK DEVELOPMENT ONLY

...\d0282599\Cross_Sections.dgn

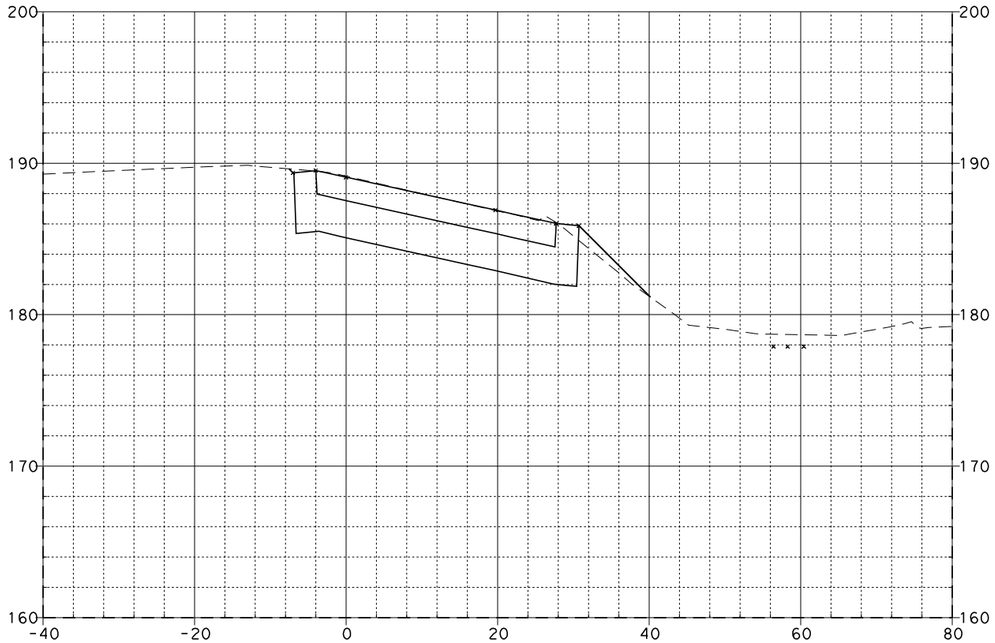

9+25.00

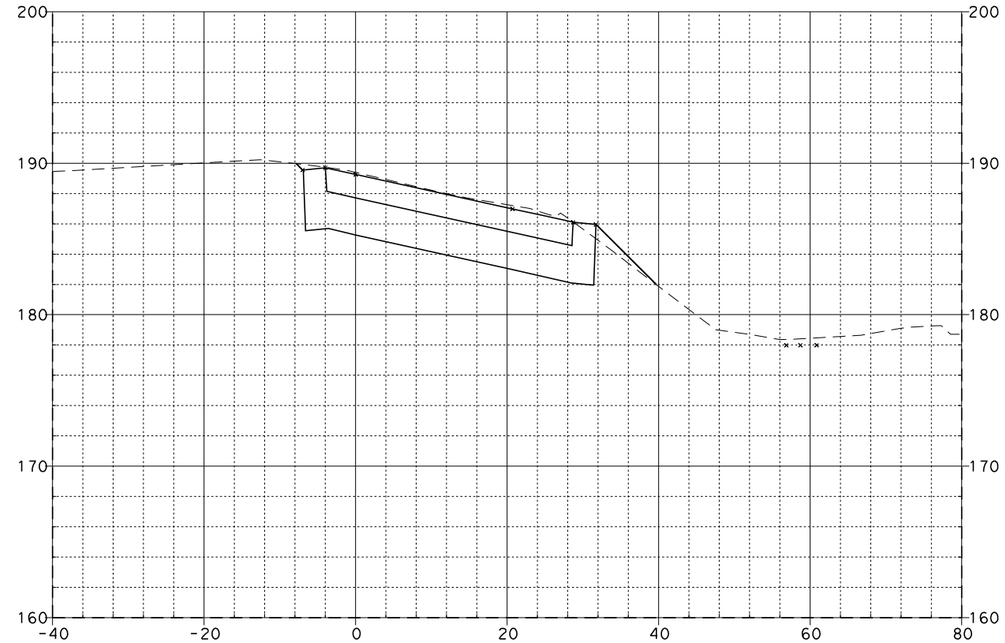

9+51.34

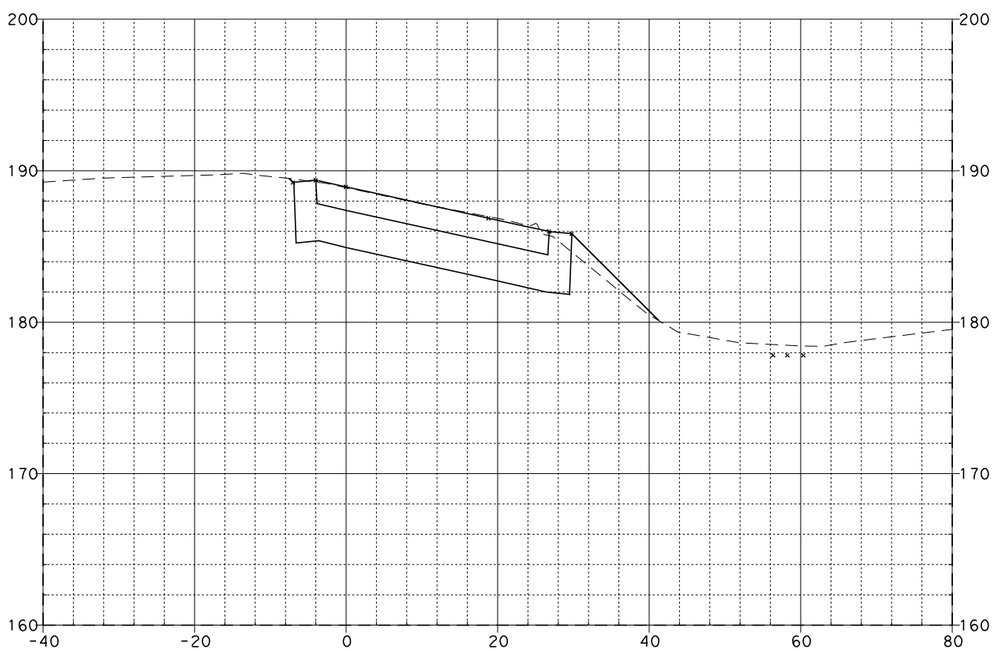

9+00.00

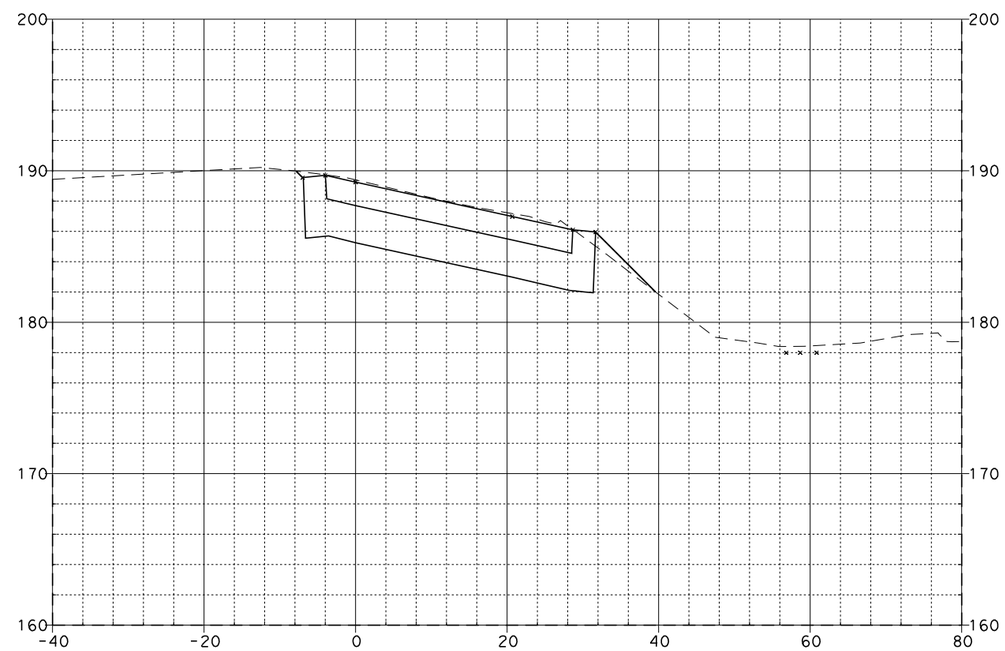

9+50.00

BALL OFF-RAMP "D-4"

EA 0F0401

SCALE: Horiz 1"=20'
Vert 1"=10'

08\03\11

Dist	COUNTY	ROUTE	POST MILES TOTAL PROJECT	SHEET No.	TOTAL SHEETS
12	Ora	57	12.2/15.2		

FOR EARTHWORK DEVELOPMENT ONLY

...\d0282599\Cross_Sections.dgn

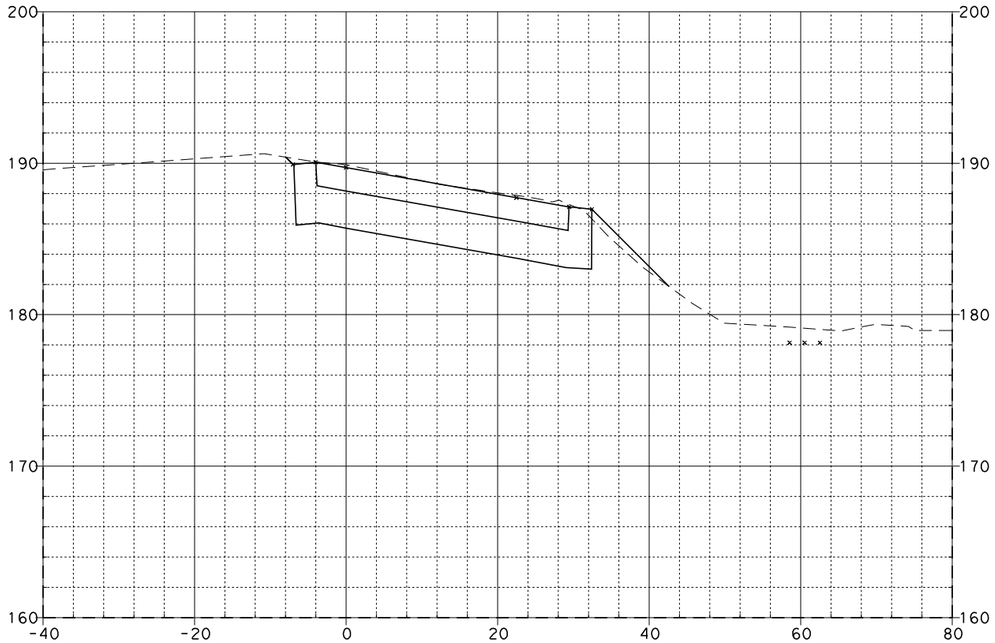

10+00.00

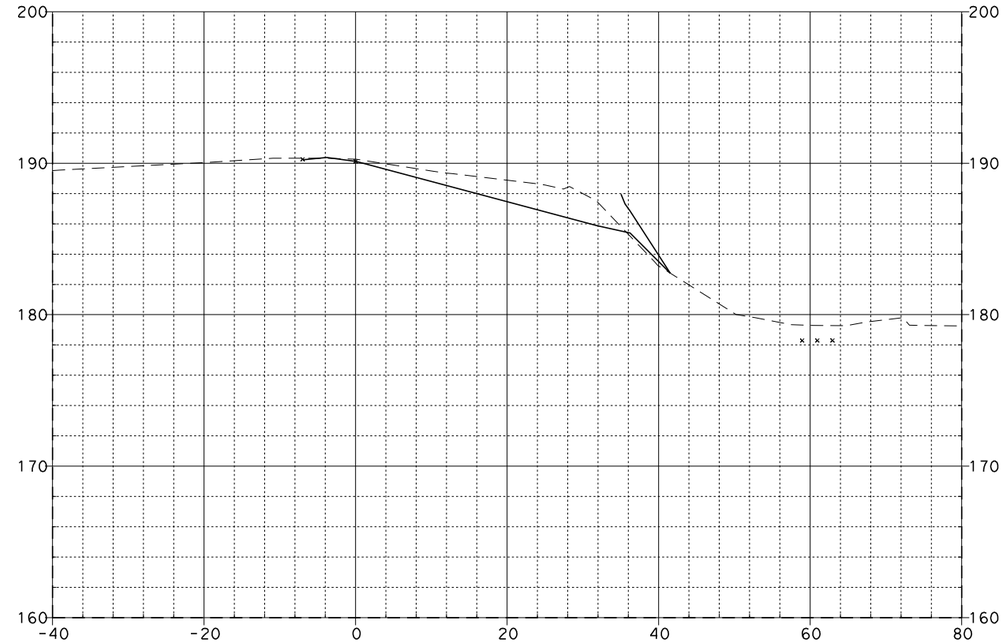

10+41.34

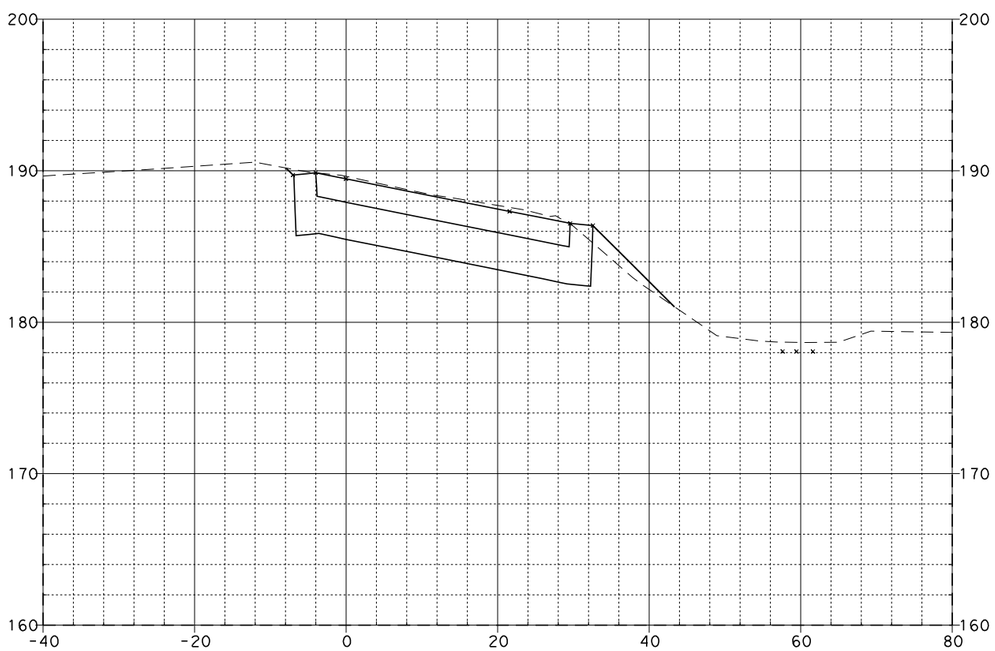

9+75.00

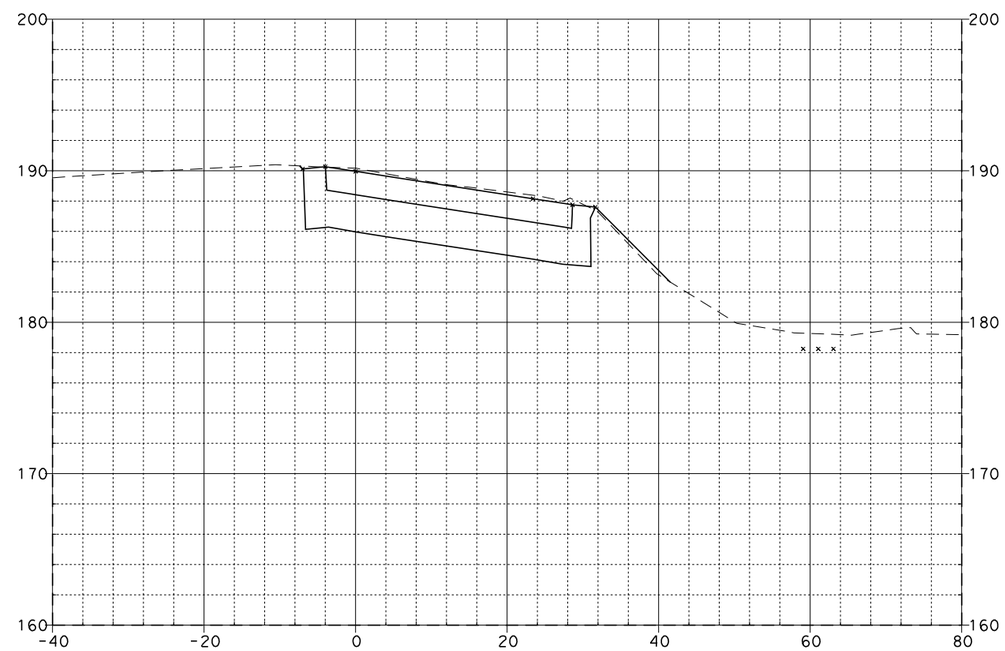

10+25.00

BALL OFF-RAMP "D-4"

EA 0F0401

SCALE: Horiz 1"=20'
Vert 1"=10'

08\03\11

Dist	COUNTY	ROUTE	POST MILES TOTAL PROJECT	SHEET No.	TOTAL SHEETS
12	Ora	57	12.2/15.2		

FOR EARTHWORK DEVELOPMENT ONLY

...\d0282599\Cross_Sections.dgn

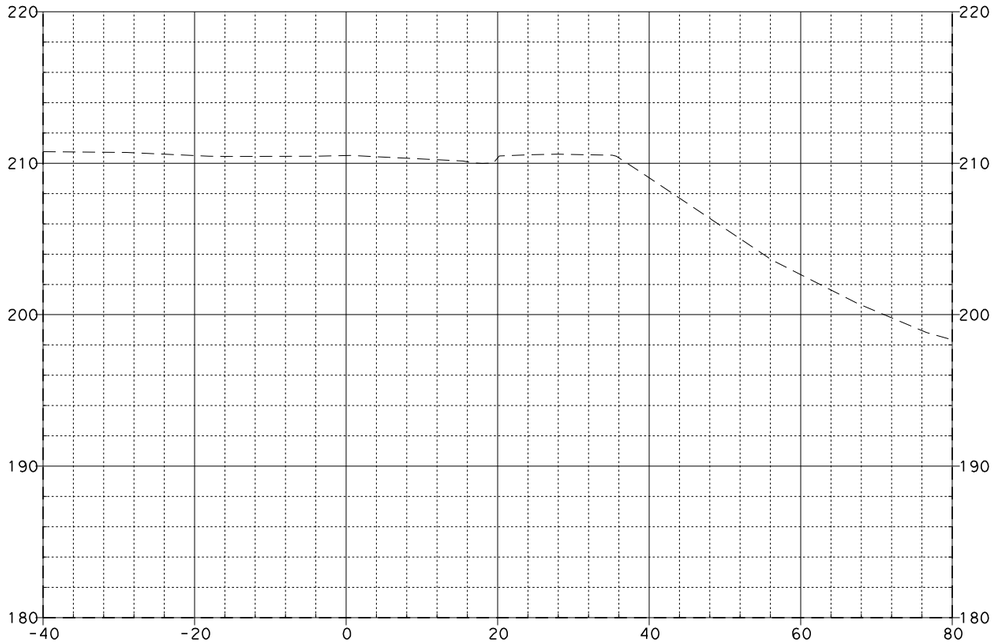

5+25.00

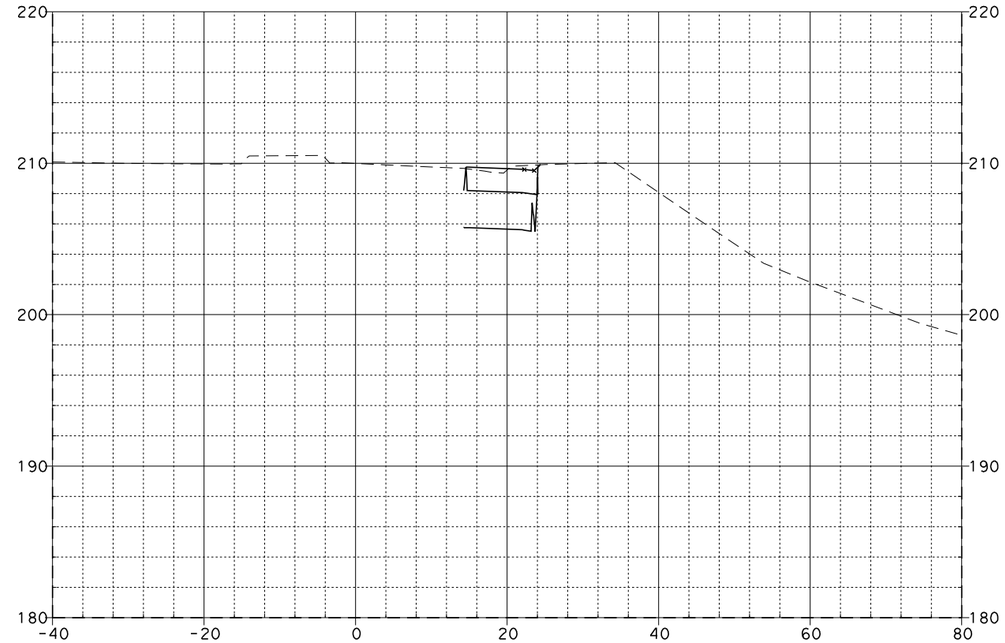

5+56.55

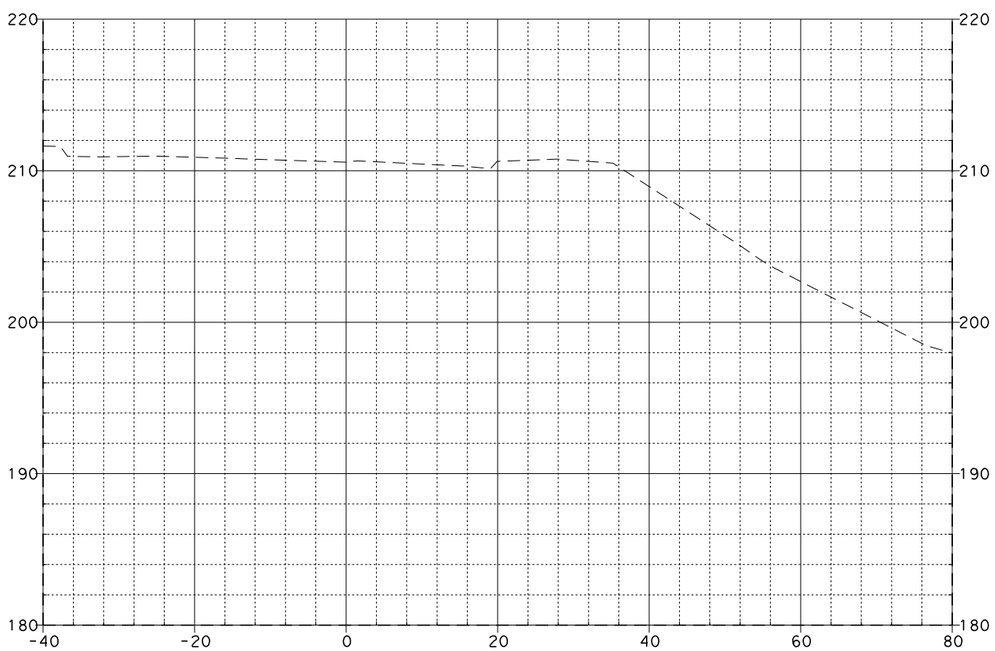

5+06.55

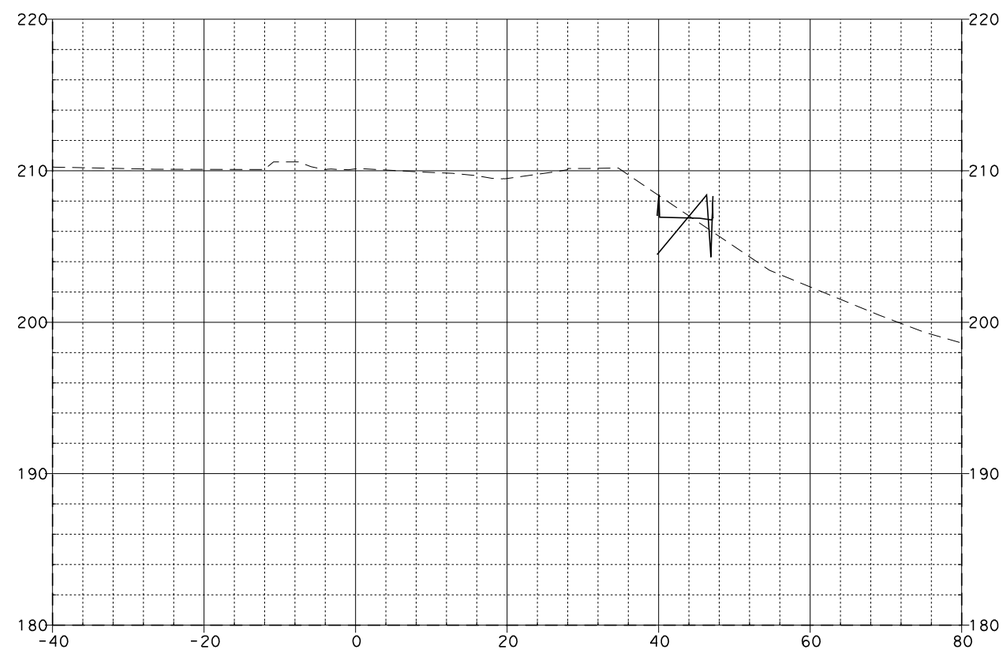

5+50.00

BALL LOOP ON-RAMP "D-5"

EA 0F0401

SCALE: Horiz 1"=20'
Vert 1"=10'

08\03\11

Dist	COUNTY	ROUTE	POST MILES TOTAL PROJECT	SHEET No.	TOTAL SHEETS
12	Ora	57	12.2/15.2		

FOR EARTHWORK DEVELOPMENT ONLY

...\d0282599\Cross_Sections.dgn

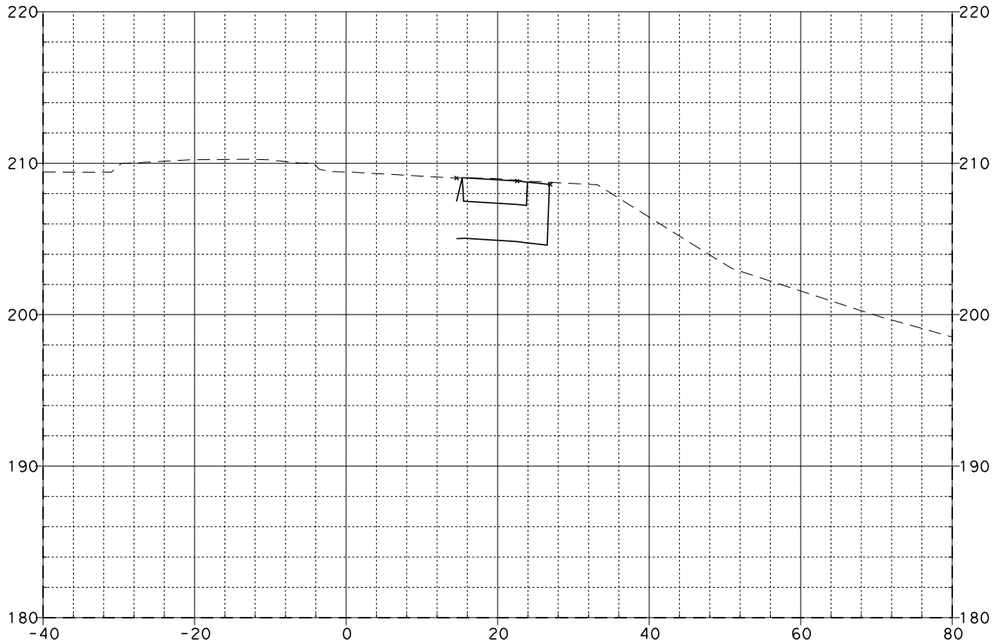

5+80.77

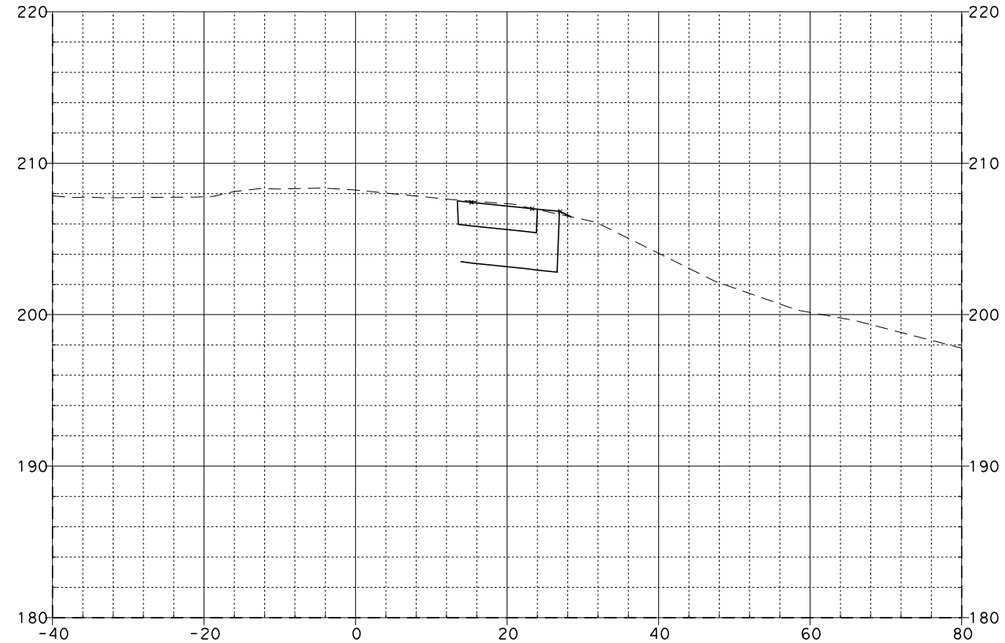

6+25.00

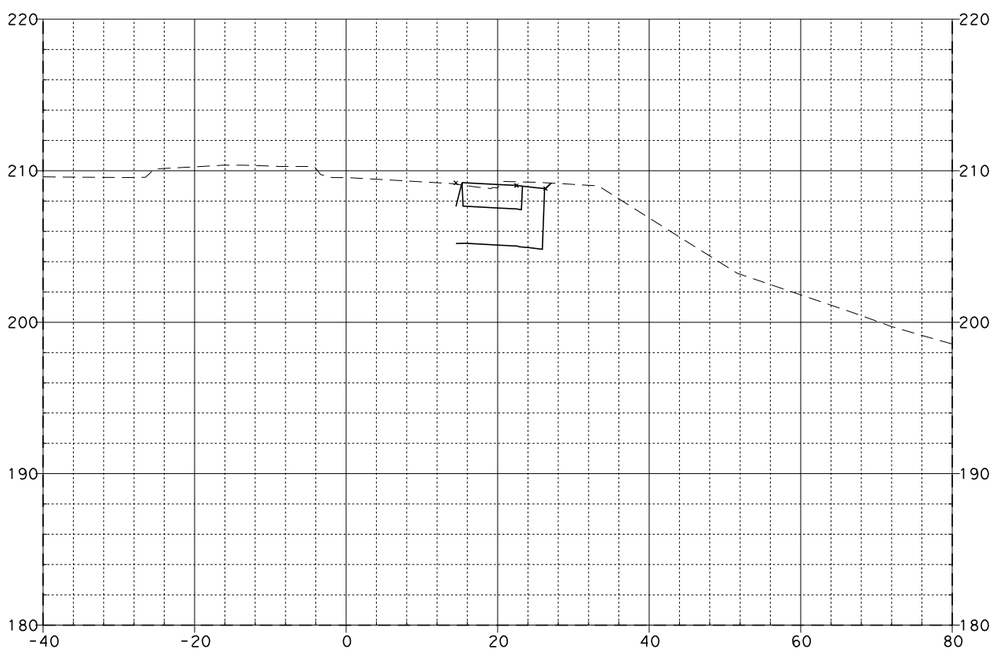

5+75.00

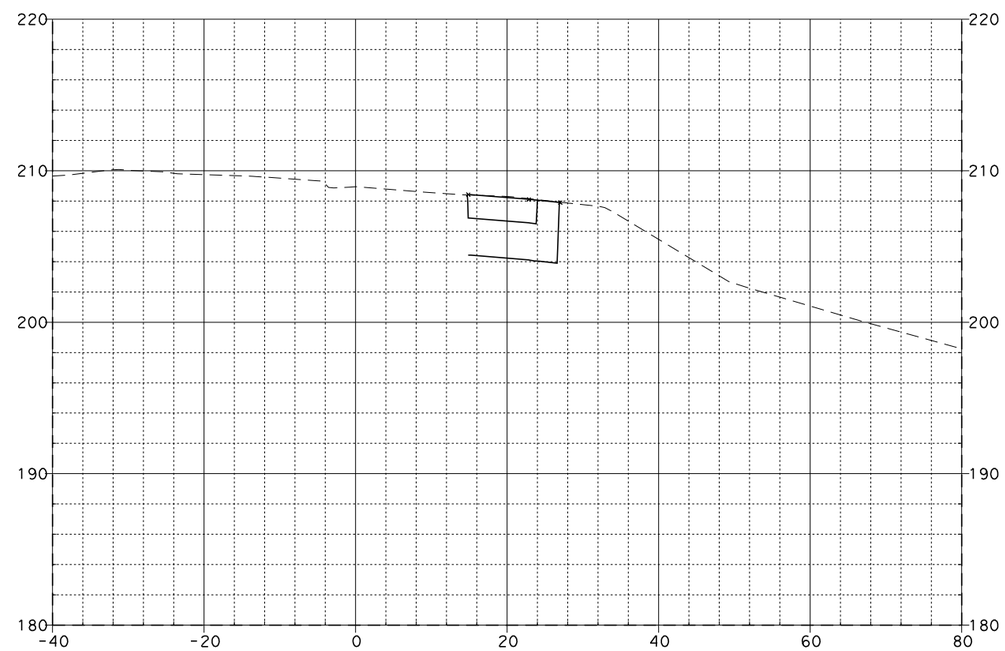

6+00.00

BALL LOOP ON-RAMP "D-5"

EA 0F0401

SCALE: Horiz 1"=20'
Vert 1"=10'

08\03\11

Dist	COUNTY	ROUTE	POST MILES TOTAL PROJECT	SHEET No.	TOTAL SHEETS
12	Ora	57	12.2/15.2		

FOR EARTHWORK DEVELOPMENT ONLY

...\d0282599\Cross_Sections.dgn

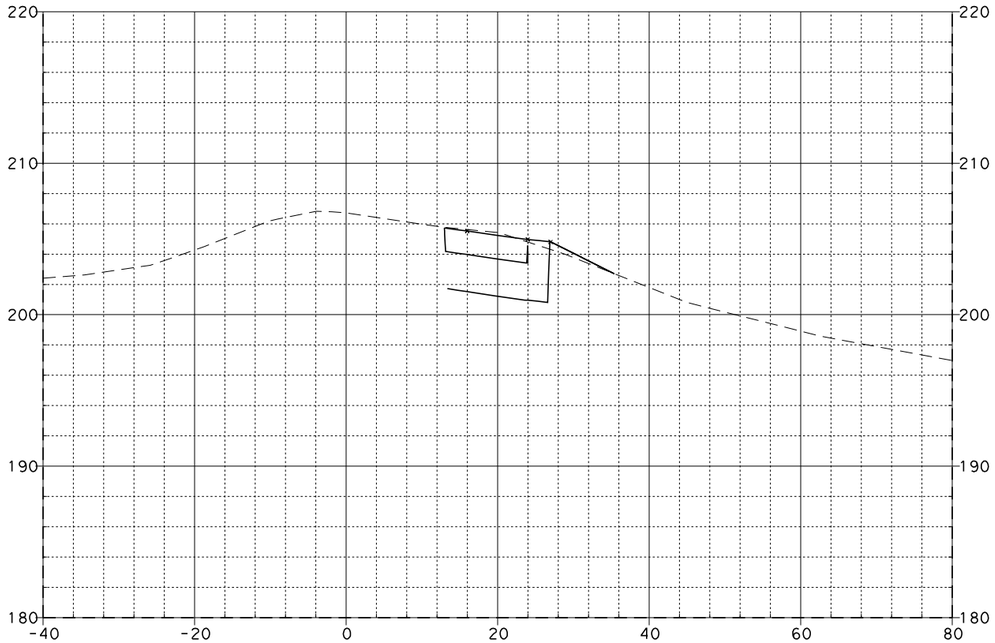

6+63.45

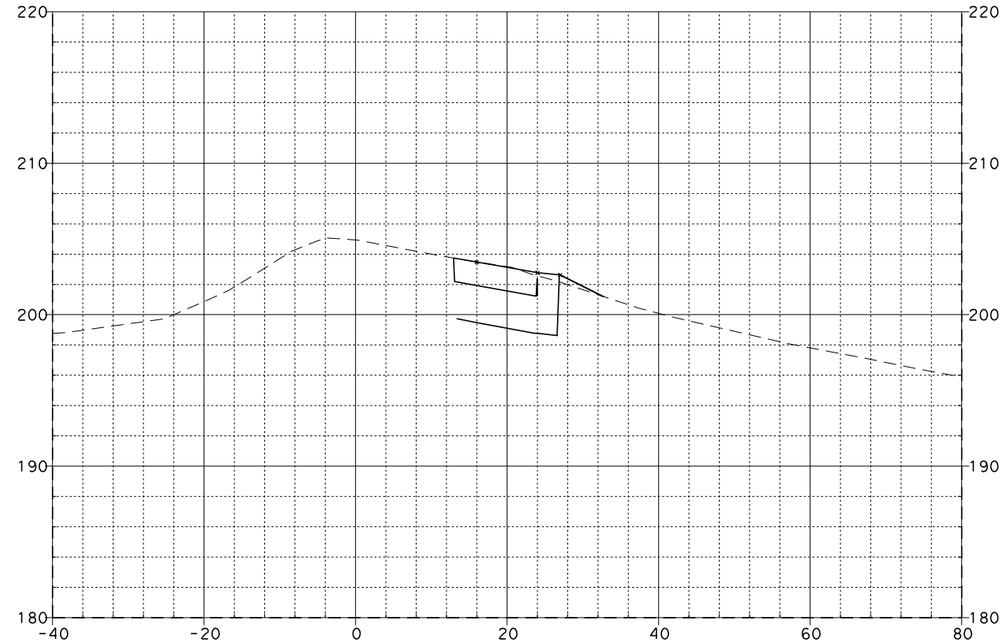

7+00.00

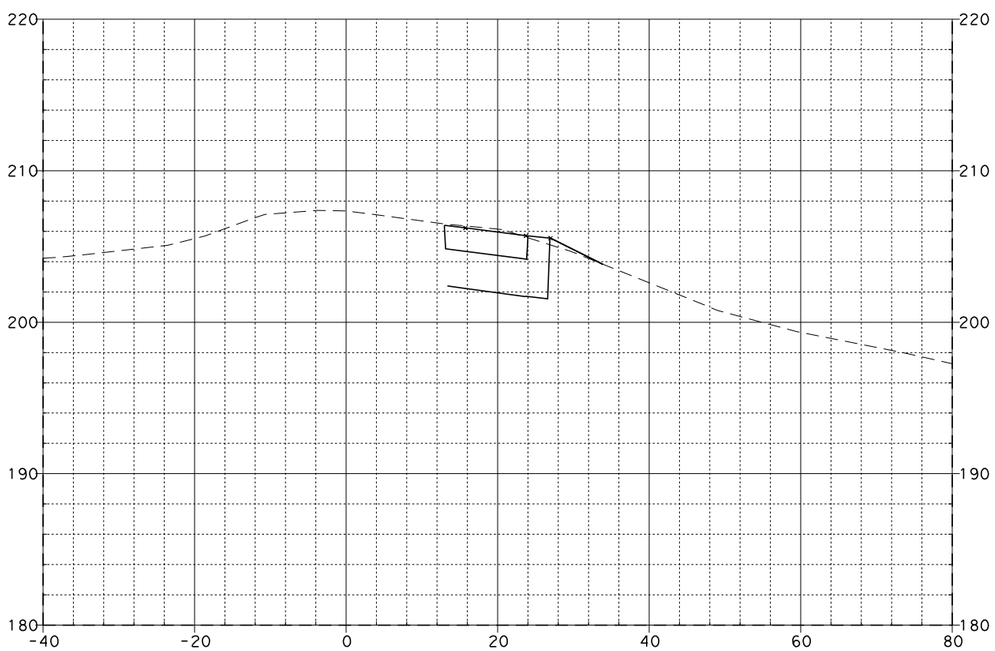

6+50.00

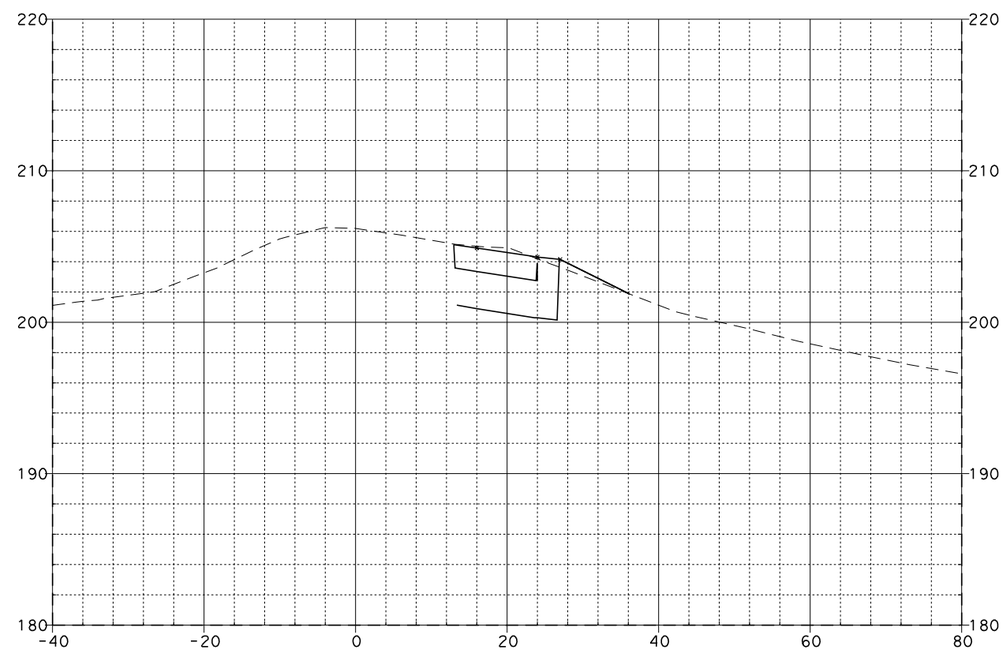

6+75.00

BALL LOOP ON-RAMP "D-5"

EA 0F0401

SCALE: Horiz 1"=20'
Vert 1"=10'

08\03\11

Dist	COUNTY	ROUTE	POST MILES TOTAL PROJECT	SHEET No.	TOTAL SHEETS
12	Ora	57	12.2/15.2		

FOR EARTHWORK DEVELOPMENT ONLY

...\d0282599\Cross_Sections.dgn

EA 0F0401

SCALE: Horiz 1"=20'
Vert 1"=10'

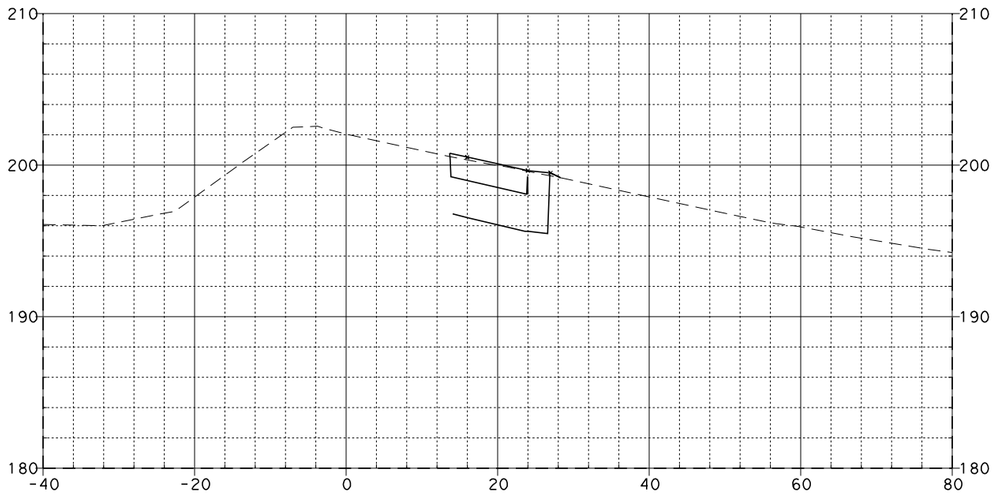

7+50.00

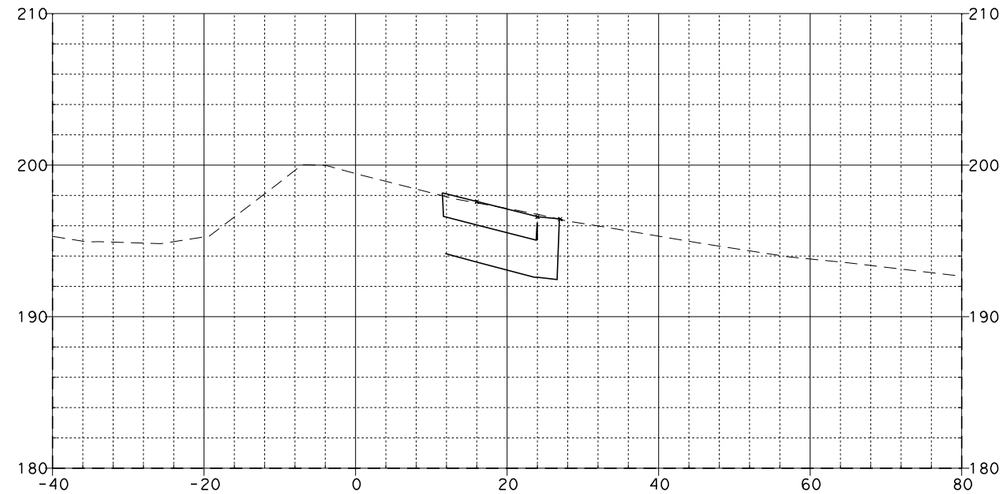

8+00.00

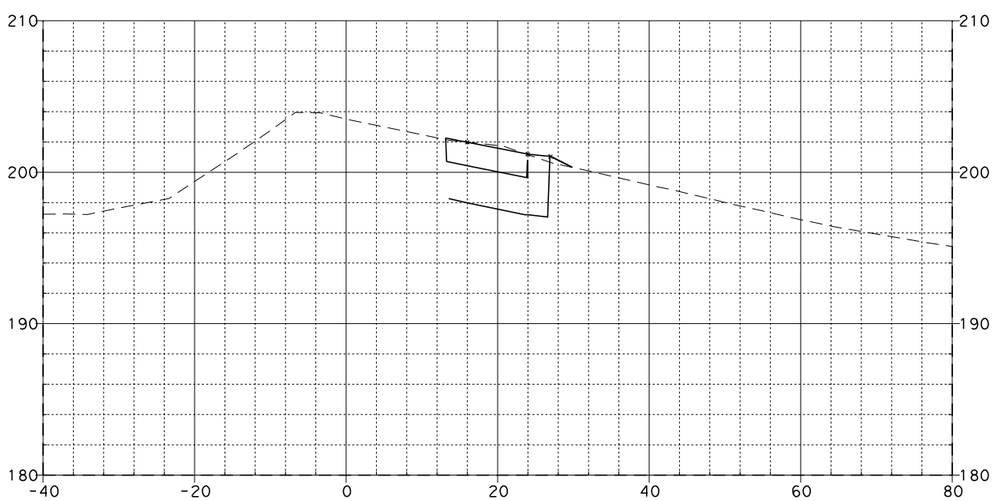

7+25.00

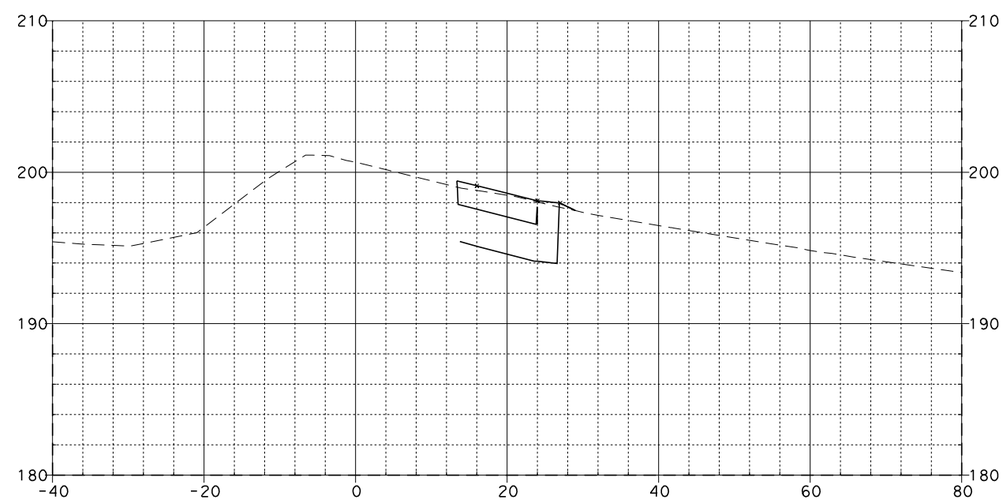

7+75.00

BALL LOOP ON-RAMP "D-5"

08\03\11

Dist	COUNTY	ROUTE	POST MILES TOTAL PROJECT	SHEET NO.	TOTAL SHEETS
12	Ora	57	12.2/15.2		

FOR EARTHWORK DEVELOPMENT ONLY

...\d0282599\Cross_Sections.dgn

EA 0F0401

SCALE: Horiz 1"=20'
Vert 1"=10'

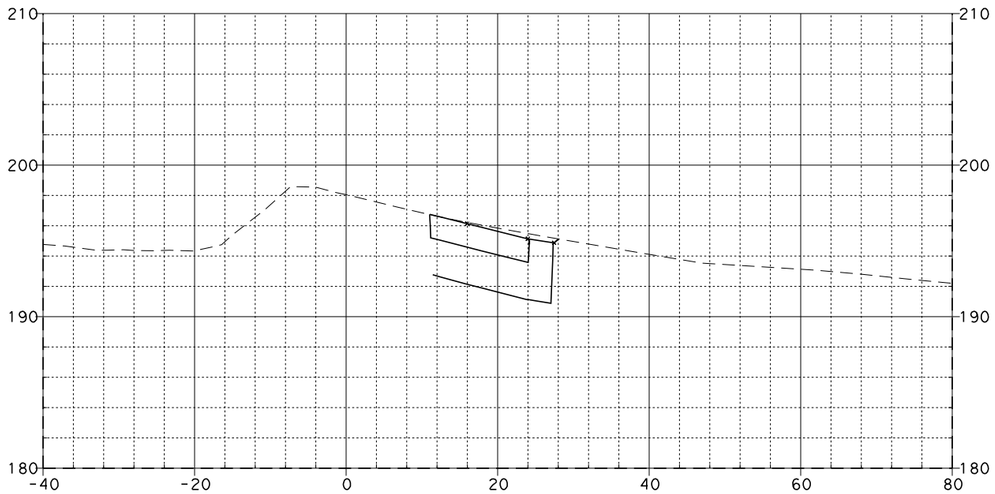

8+27.89

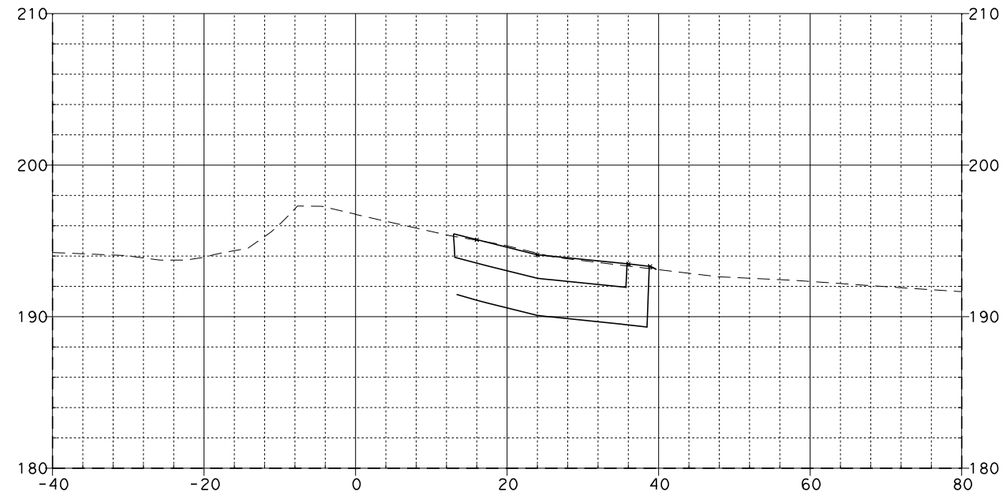

8+53.60

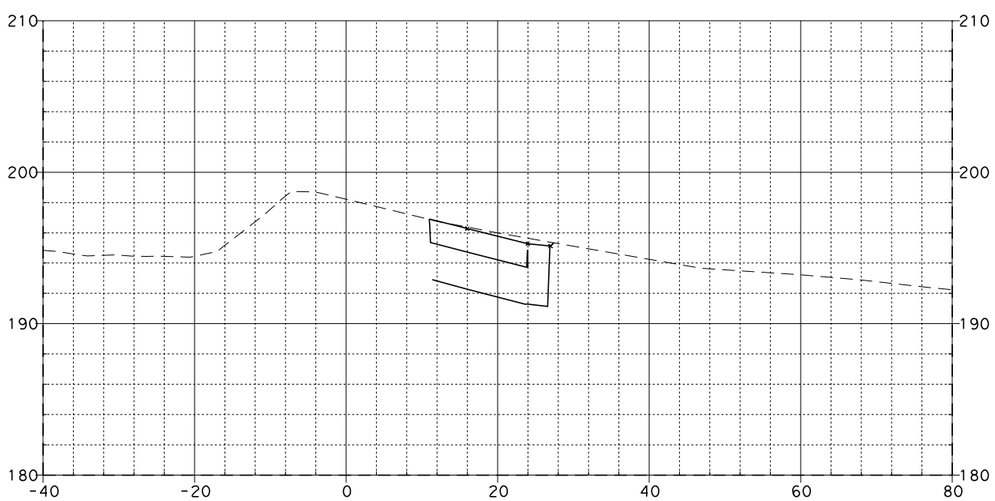

8+25.00

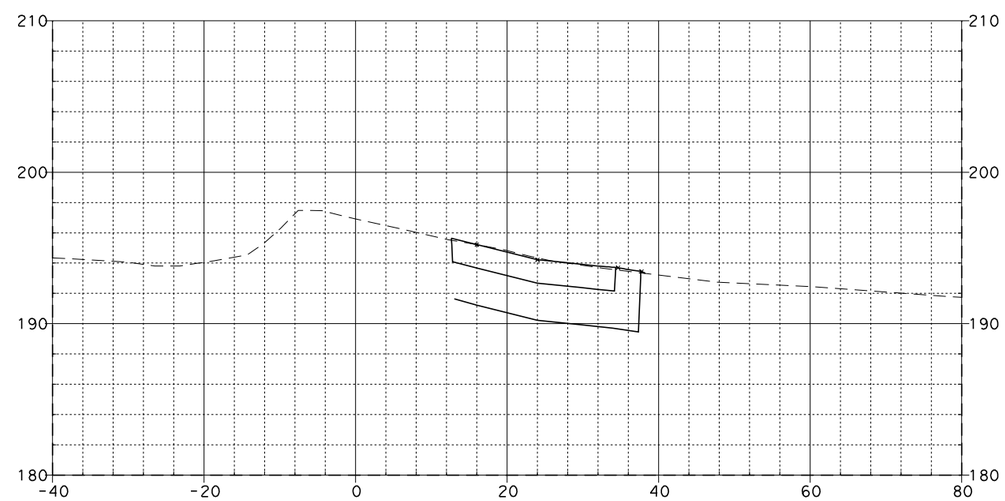

8+50.00

BALL LOOP ON-RAMP "D-5"

08\03\11

Dist	COUNTY	ROUTE	POST MILES TOTAL PROJECT	SHEET NO.	TOTAL SHEETS
12	Ora	57	12.2/15.2		

FOR EARTHWORK DEVELOPMENT ONLY

...\d0282599\Cross_Sections.dgn

EA 0F0401

SCALE: Horiz 1"=20'
Vert 1"=10'

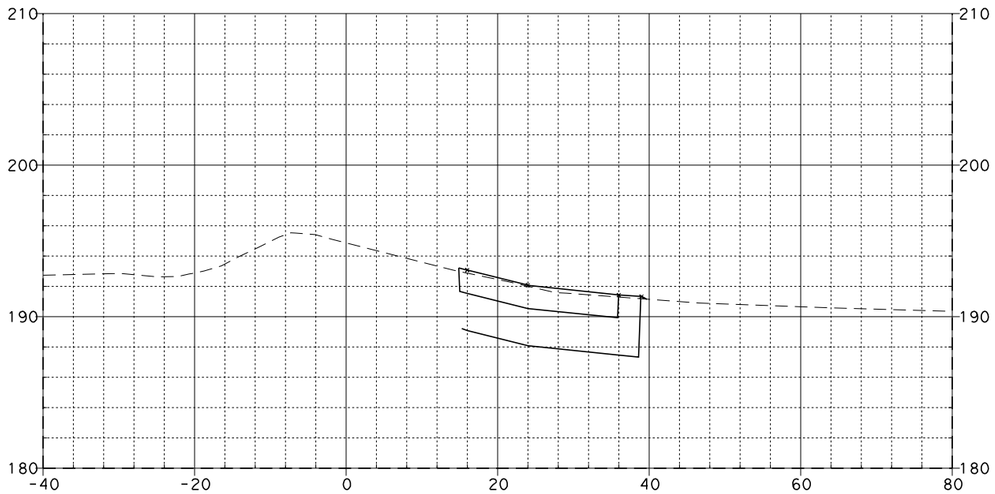

9+00.00

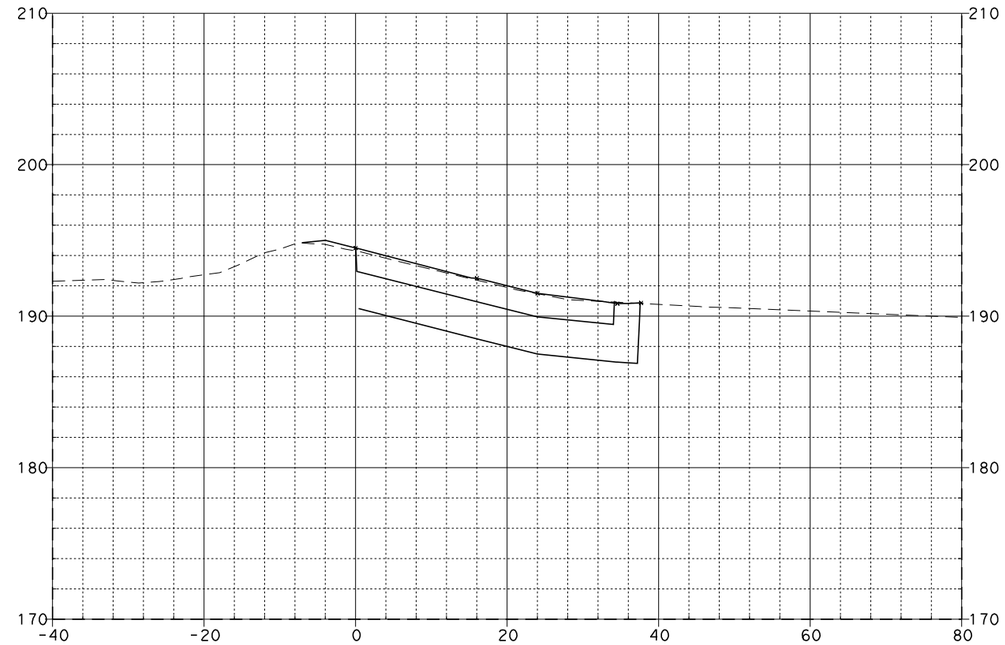

9+15.38

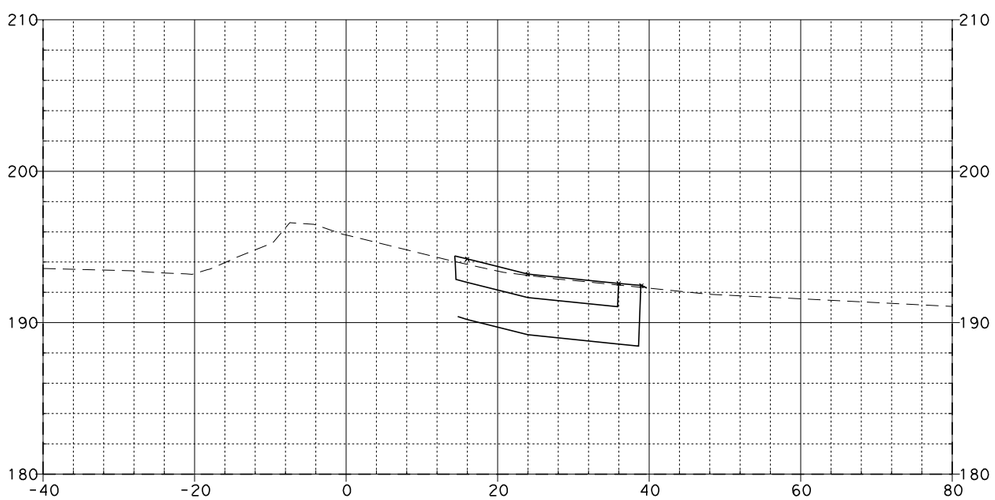

8+75.00

BALL LOOP ON-RAMP "D-5"

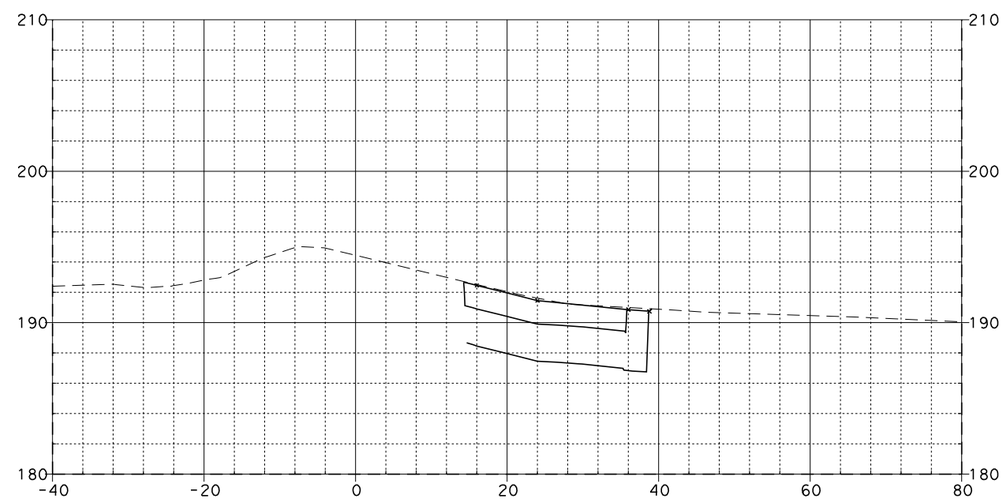

9+11.46

08\03\11

Dist	COUNTY	ROUTE	POST MILES TOTAL PROJECT	SHEET NO.	TOTAL SHEETS
12	Ora	57	12.2/15.2		

FOR EARTHWORK DEVELOPMENT ONLY

...\d0282599\Cross_Sections.dgn

EA 0F0401

SCALE: Horiz 1"=20'
Vert 1"=10'

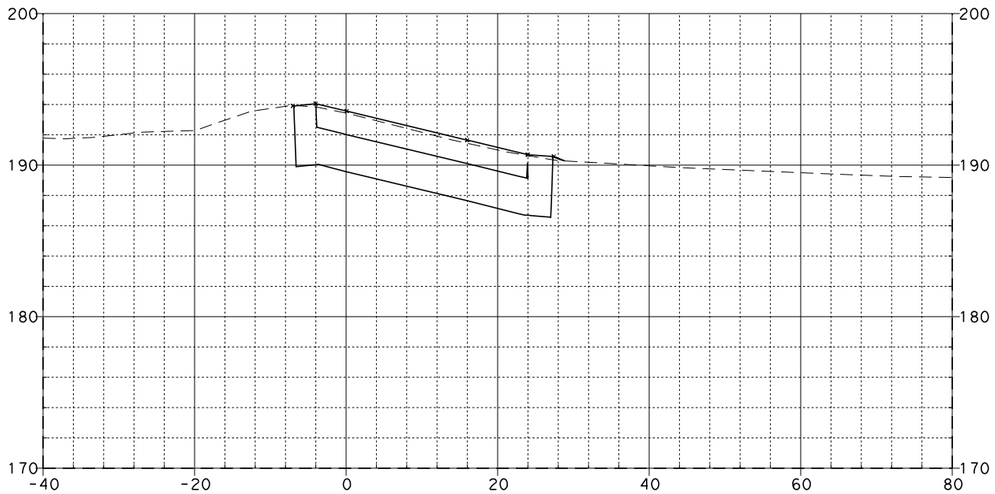

9+37.68

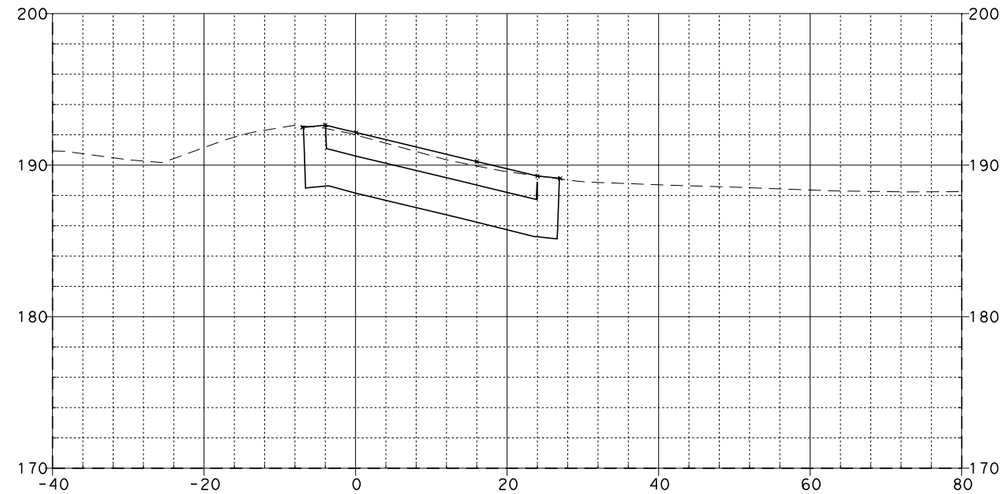

9+75.00

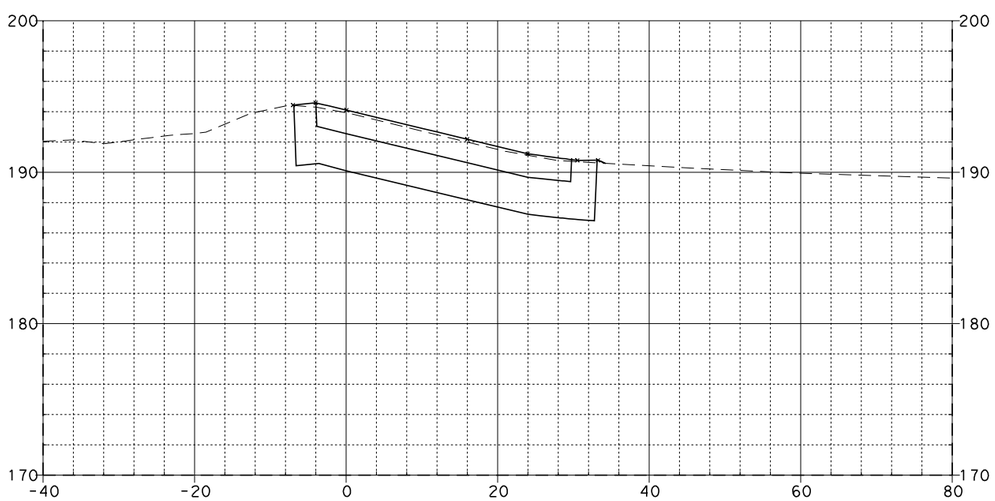

9+25.00

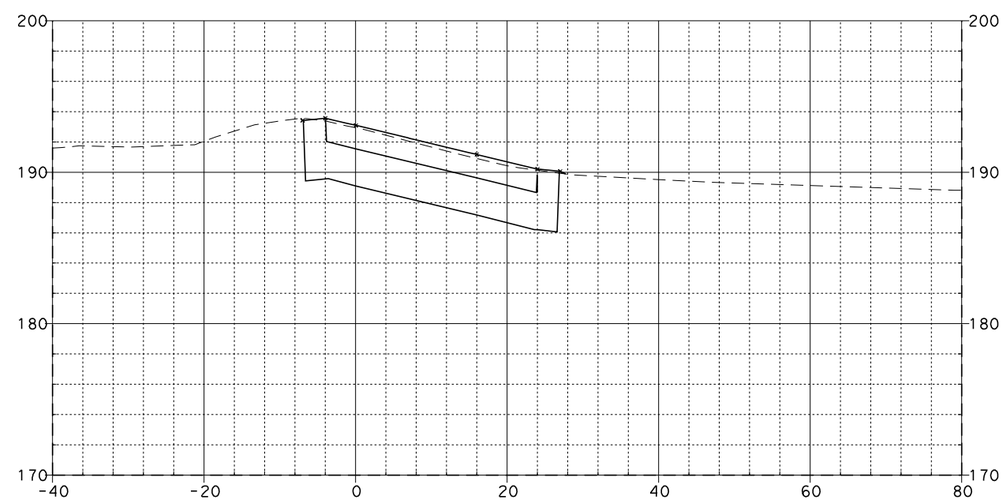

9+50.00

BALL LOOP ON-RAMP "D-5"

08\03\11

Dist	COUNTY	ROUTE	POST MILES TOTAL PROJECT	SHEET NO.	TOTAL SHEETS
12	Ora	57	12.2/15.2		

FOR EARTHWORK DEVELOPMENT ONLY

...\d0282599\Cross_Sections.dgn

EA 0F0401

SCALE: Horiz 1"=20'
Vert 1"=10'

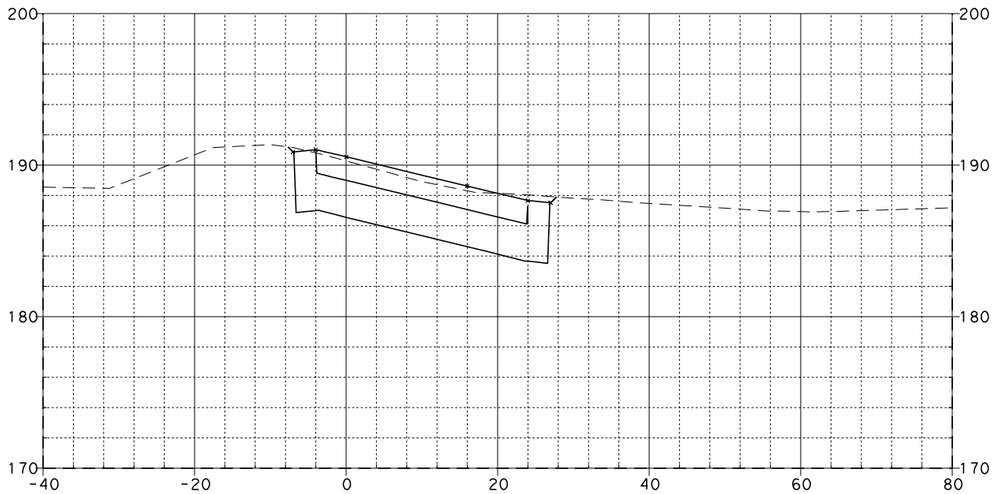

10+25.00

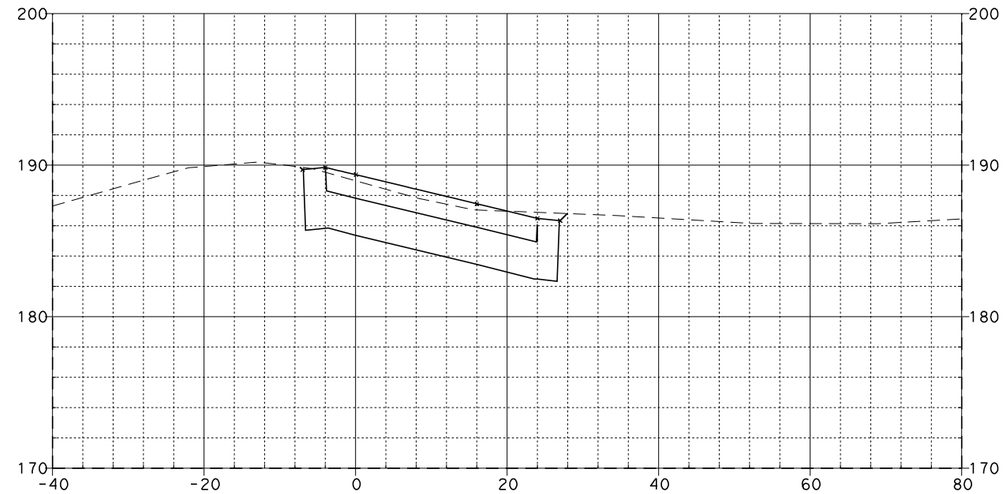

10+70.00

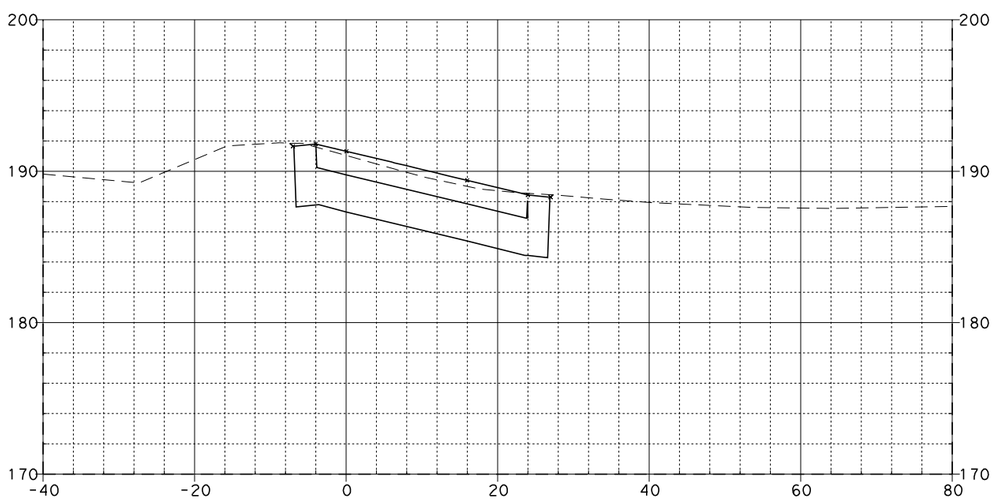

10+00.00

BALL LOOP ON-RAMP "D-5"

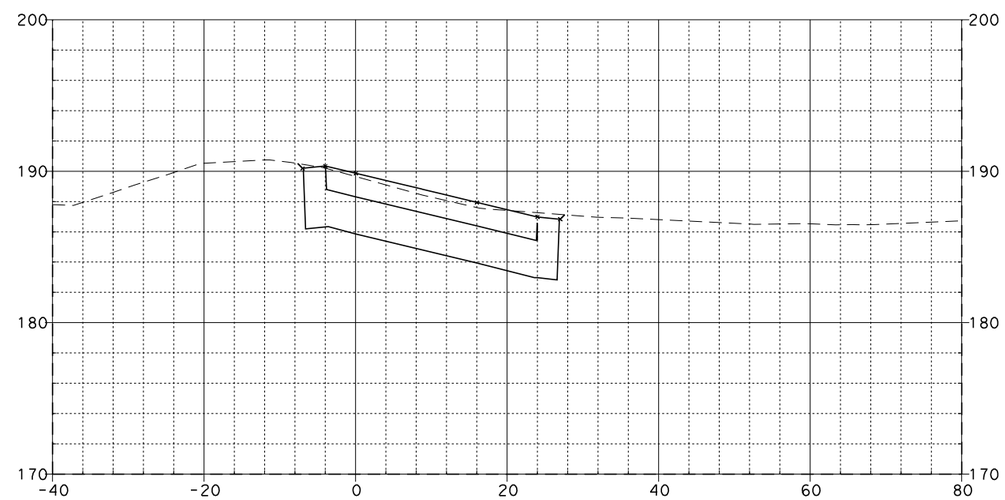

10+50.00

08\03\11

Dist	COUNTY	ROUTE	POST MILES TOTAL PROJECT	SHEET NO.	TOTAL SHEETS
12	Ora	57	12.2/15.2		

FOR EARTHWORK DEVELOPMENT ONLY

...\d0282599\Cross_Sections.dgn

EA 0F0401

SCALE: Horiz 1"=20'
Vert 1"=10'

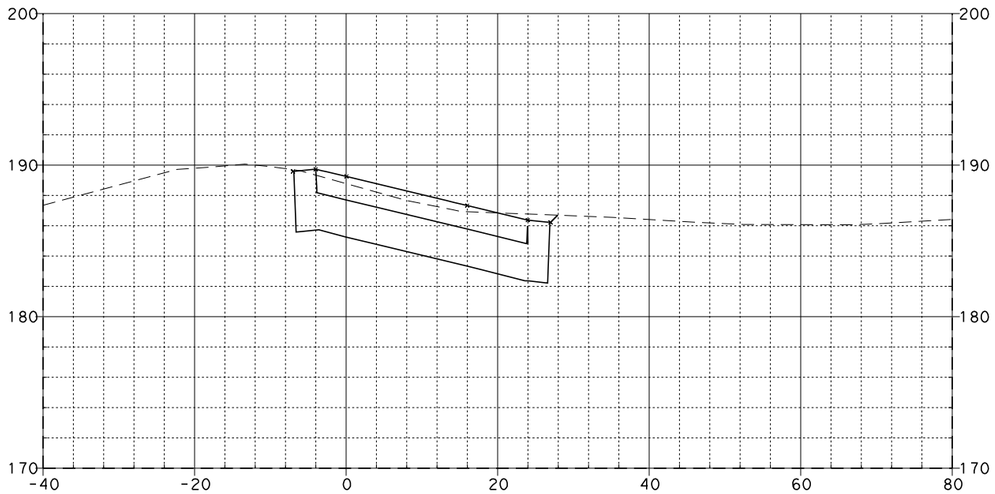

10+75.00

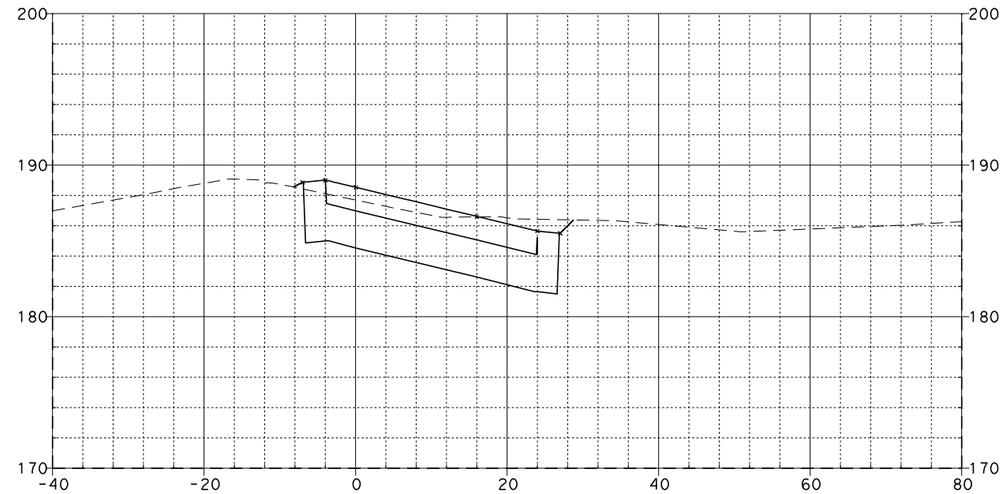

11+10.38

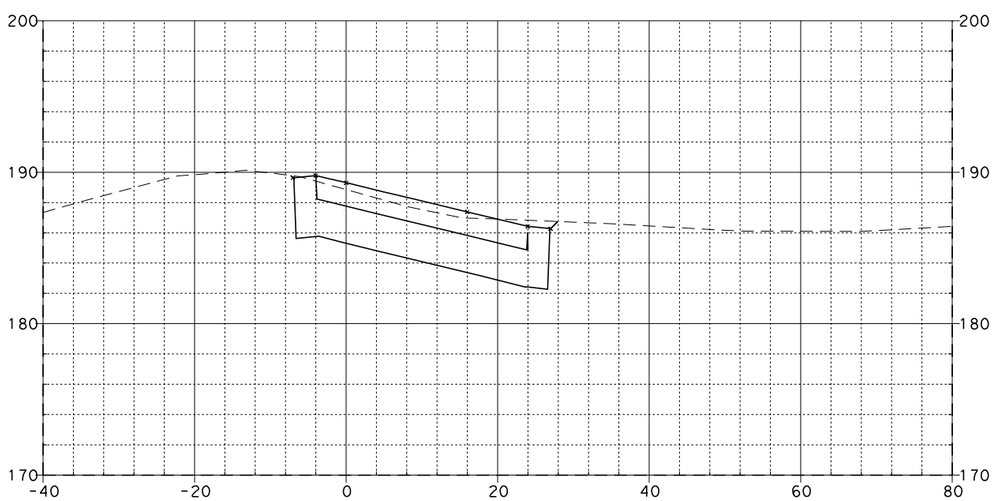

10+73.00

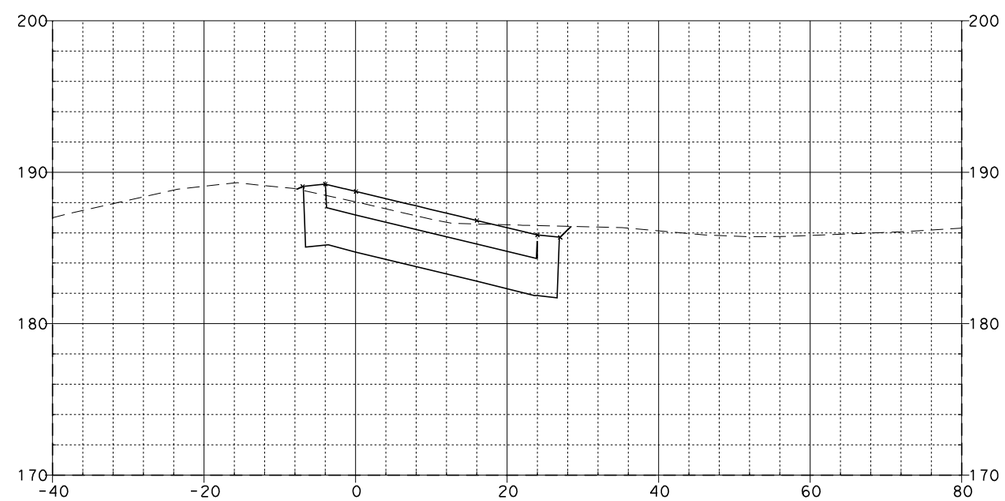

11+00.00

BALL LOOP ON-RAMP "D-5"

08\03\11

Dist	COUNTY	ROUTE	POST MILES TOTAL PROJECT	SHEET NO.	TOTAL SHEETS
12	Ora	57	12.2/15.2		

FOR EARTHWORK DEVELOPMENT ONLY

...\d0282599\Cross_Sections.dgn

EA 0F0401

SCALE: Horiz 1"=20'
Vert 1"=10'

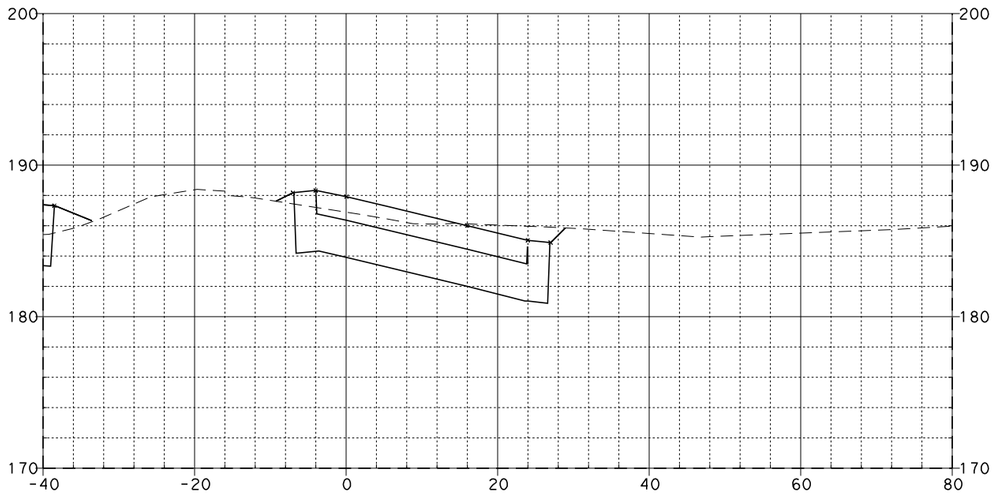

11+50.00

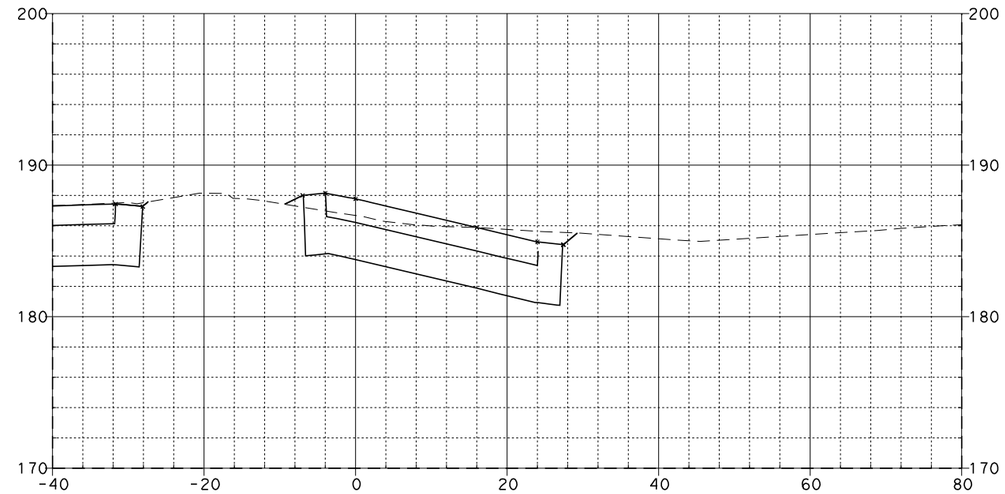

11+62.15

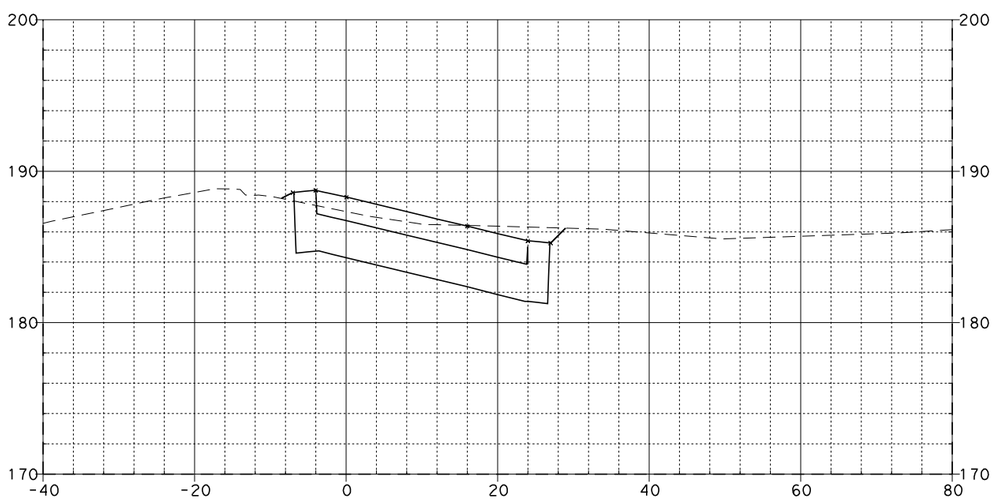

11+25.00

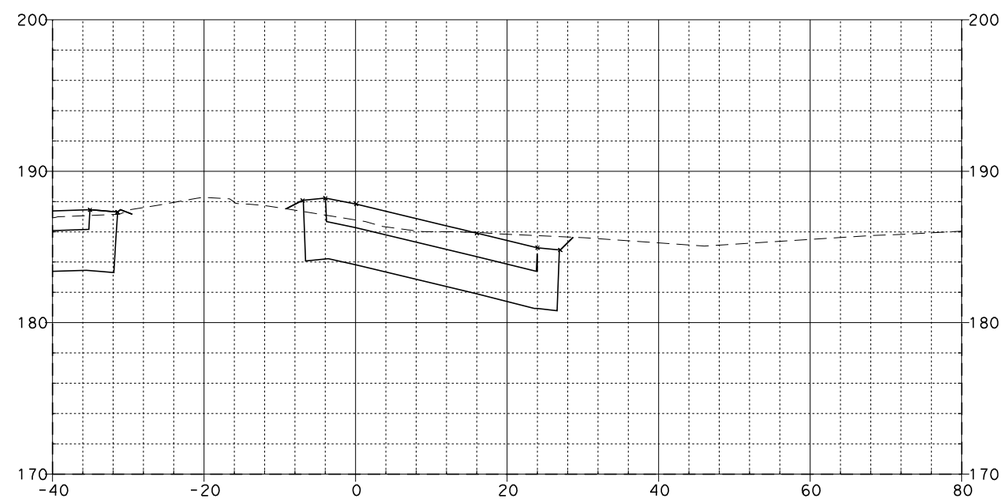

11+57.95

BALL LOOP ON-RAMP "D-5"

08\03\11

Dist	COUNTY	ROUTE	POST MILES TOTAL PROJECT	SHEET NO.	TOTAL SHEETS
12	Ora	57	12.2/15.2		

FOR EARTHWORK DEVELOPMENT ONLY

...\d0282599\Cross_Sections.dgn

EA 0F0401

SCALE: Horiz 1"=20'
Vert 1"=10'

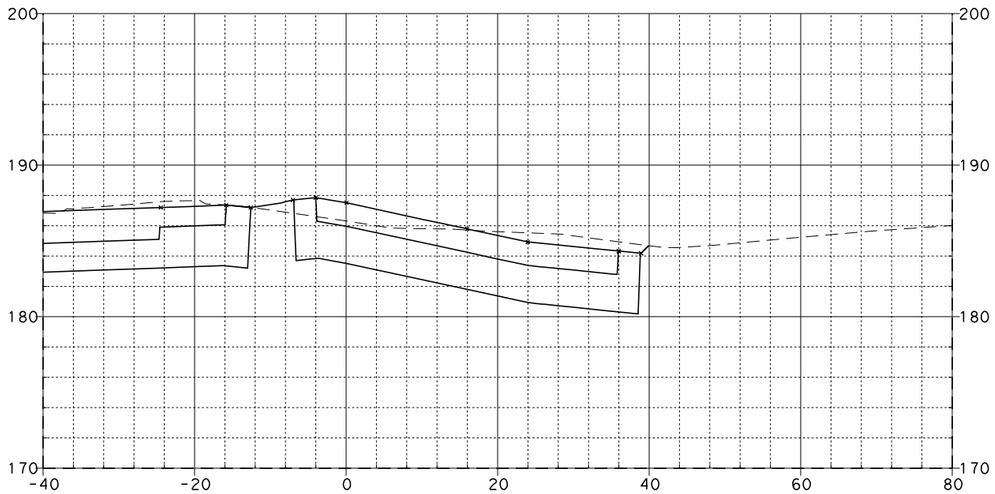

11+88.47

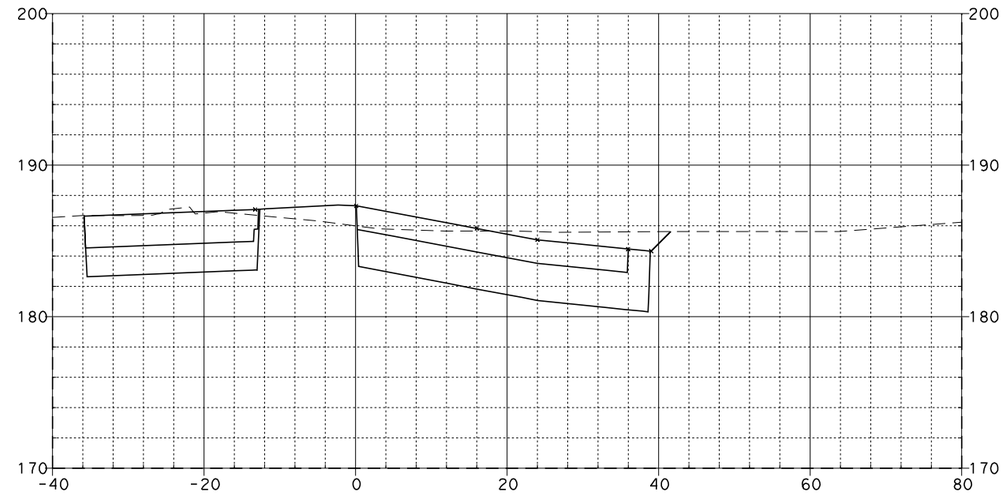

12+25.00

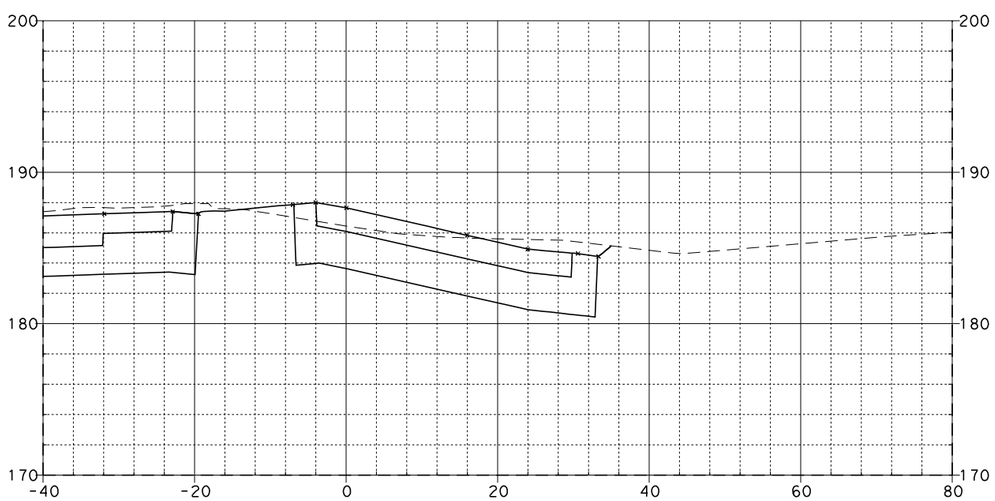

11+75.00

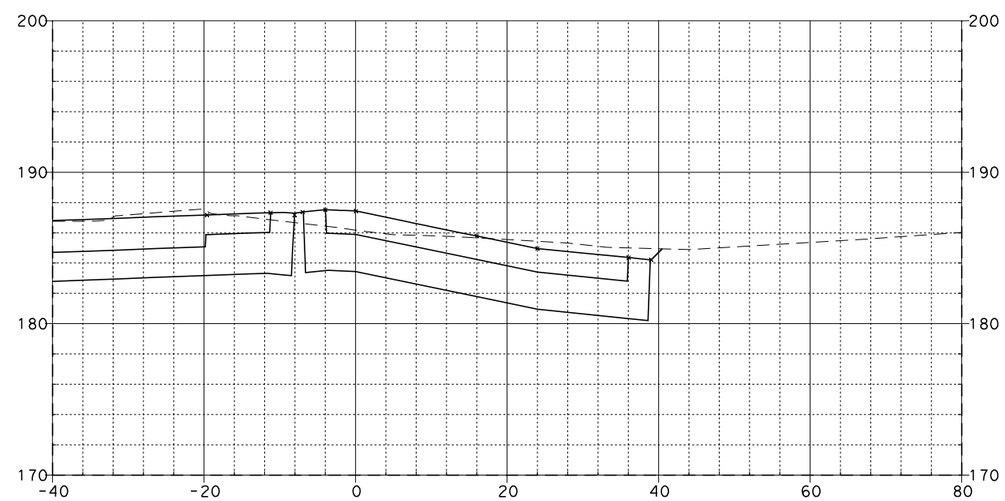

12+00.00

BALL LOOP ON-RAMP "D-5"

08\03\11

Dist	COUNTY	ROUTE	POST MILES TOTAL PROJECT	SHEET NO.	TOTAL SHEETS
12	Ora	57	12.2/15.2		

FOR EARTHWORK DEVELOPMENT ONLY

...\d0282599\Cross_Sections.dgn

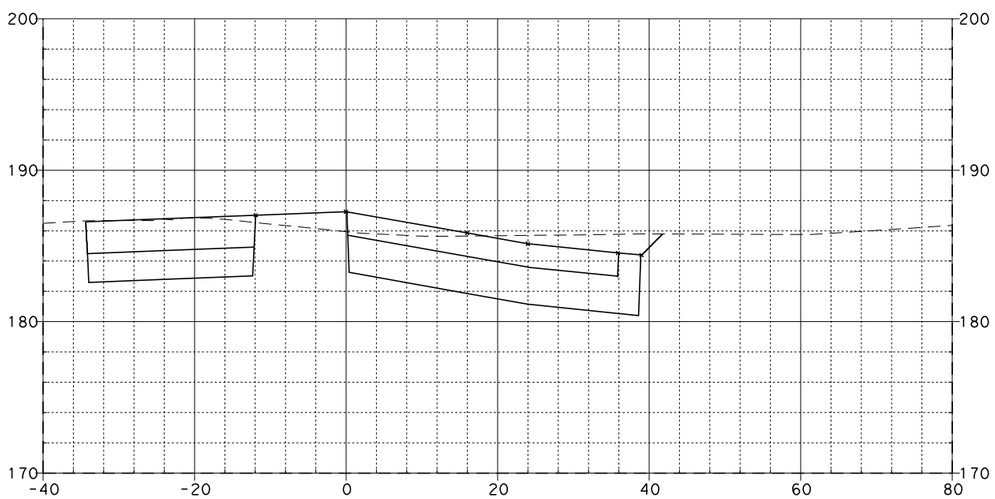

12+37.95

BALL LOOP ON-RAMP "D-5"

EA 0F0401

SCALE: Horiz 1"=20'
Vert 1"=10'

08\03\11

Dist	COUNTY	ROUTE	POST MILES TOTAL PROJECT	SHEET No.	TOTAL SHEETS
12	Ora	57	12.2/15.2		

FOR EARTHWORK DEVELOPMENT ONLY

...\d0282599\Cross_Sections.dgn

EA 0F0401

SCALE: Horiz 1"=20'
Vert 1"=10'

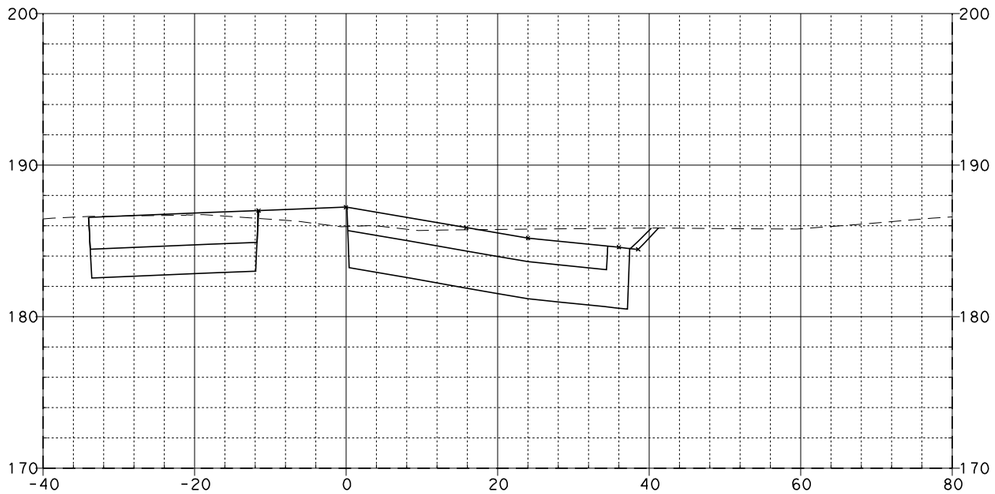

12+45.34

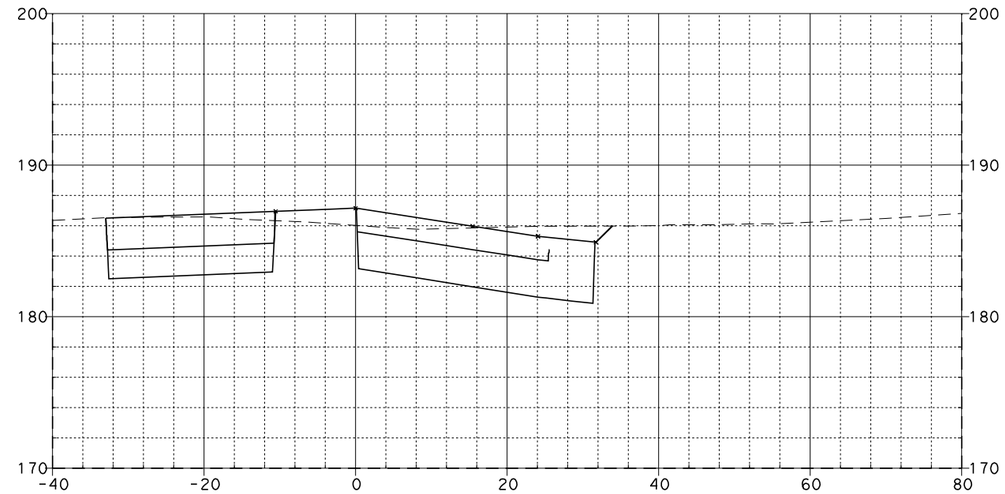

12+65.38

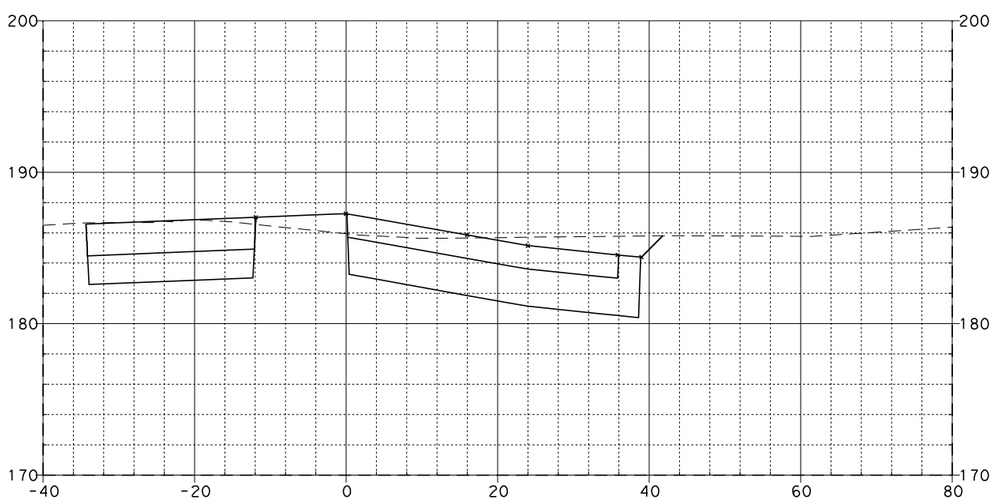

12+38.35

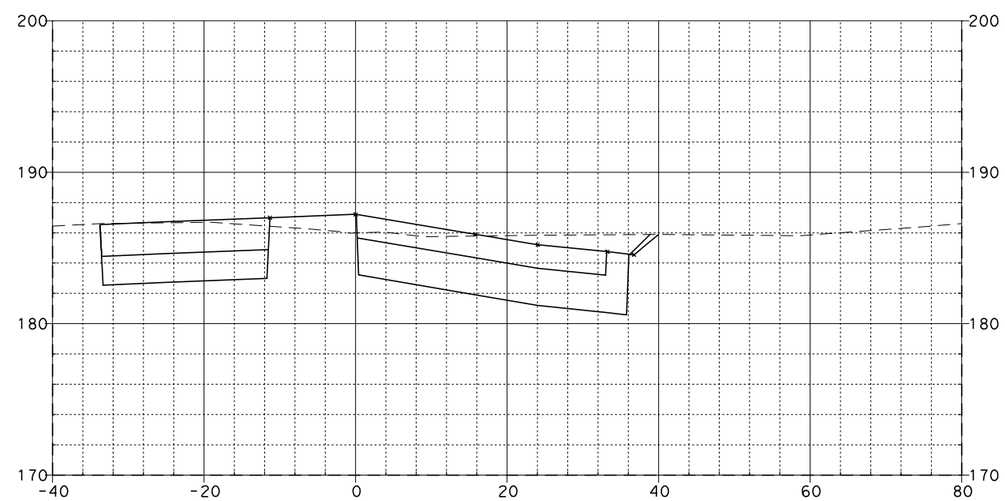

12+50.00

BALL LOOP ON-RAMP "D-5"

08\03\11

Dist	COUNTY	ROUTE	POST MILES TOTAL PROJECT	SHEET NO.	TOTAL SHEETS
12	Ora	57	12.2/15.2		

FOR EARTHWORK DEVELOPMENT ONLY

...\d0282599\Cross_Sections.dgn

EA 0F0401

SCALE: Horiz 1"=20'
Vert 1"=10'

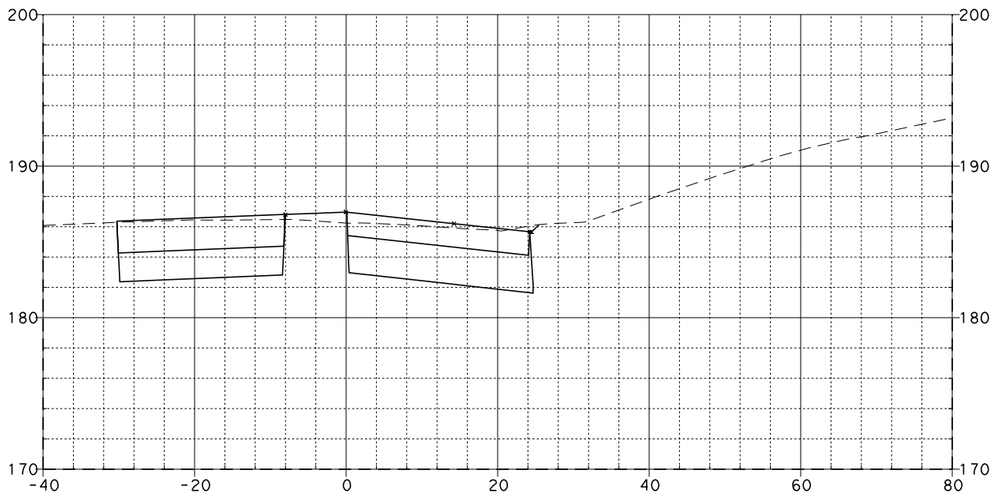

13+24.27

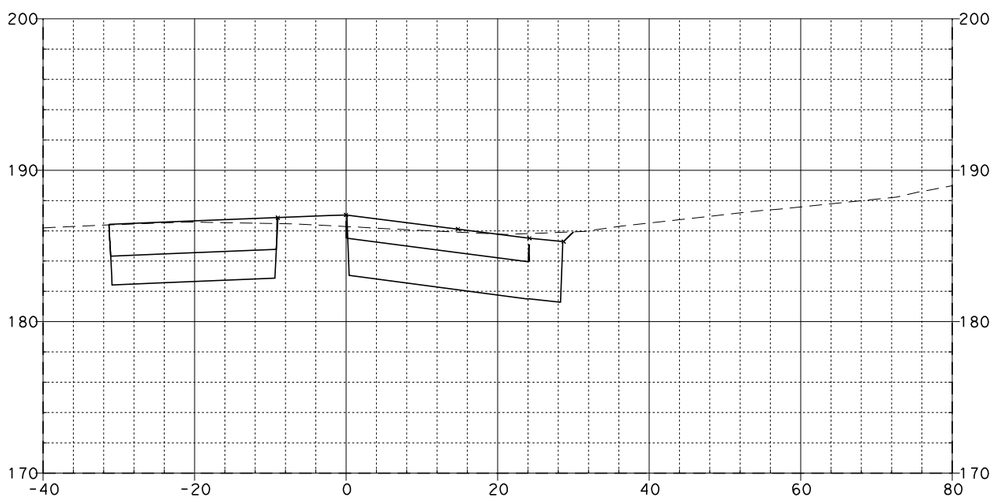

13+00.00

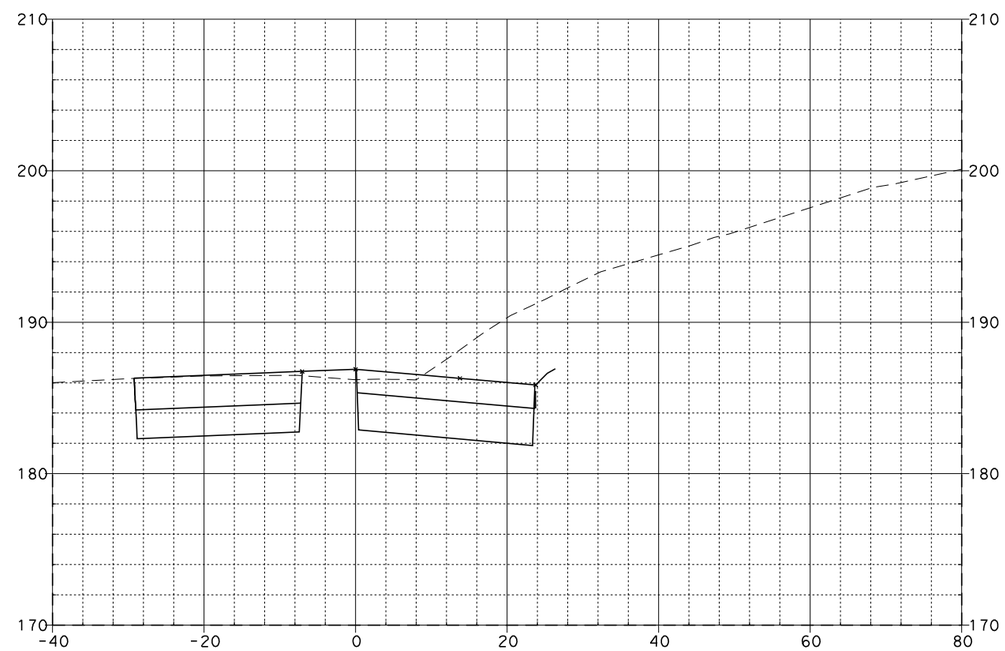

13+50.00

BALL LOOP ON-RAMP "D-5"

08\03\11

Dist	COUNTY	ROUTE	POST MILES TOTAL PROJECT	SHEET No.	TOTAL SHEETS
12	Ora	57	12.2/15.2		

FOR EARTHWORK DEVELOPMENT ONLY

...\d0282599\Cross_Sections.dgn

EA 0F0401

SCALE: Horiz 1"=20'
Vert 1"=10'

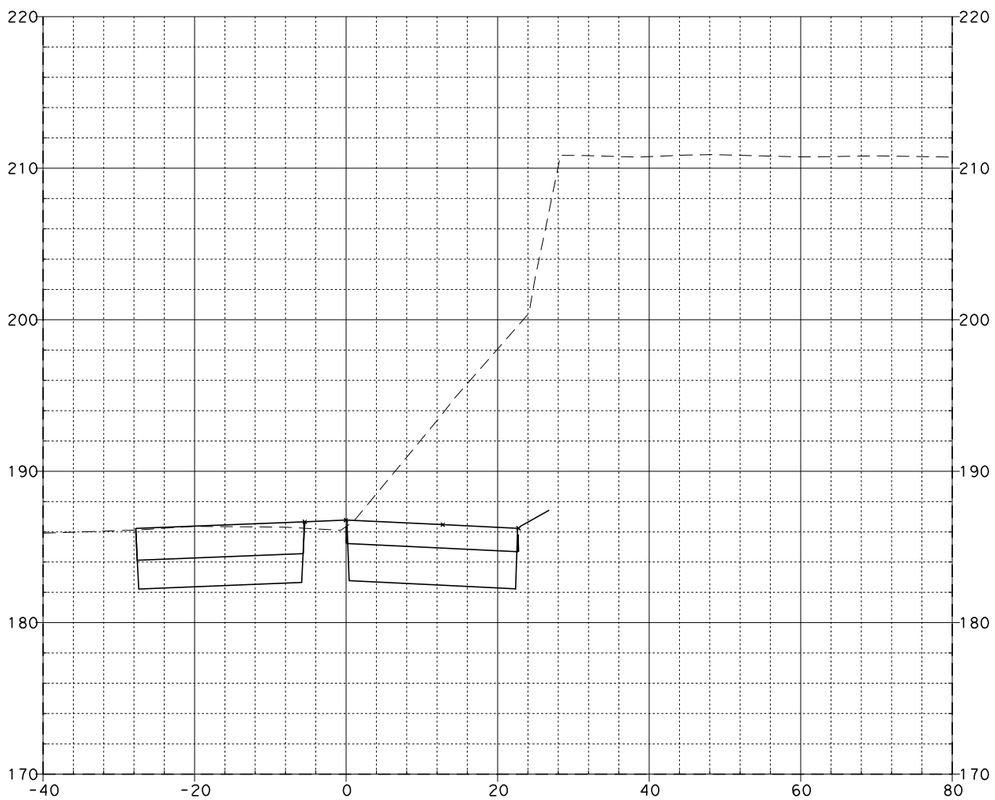

14+00.00

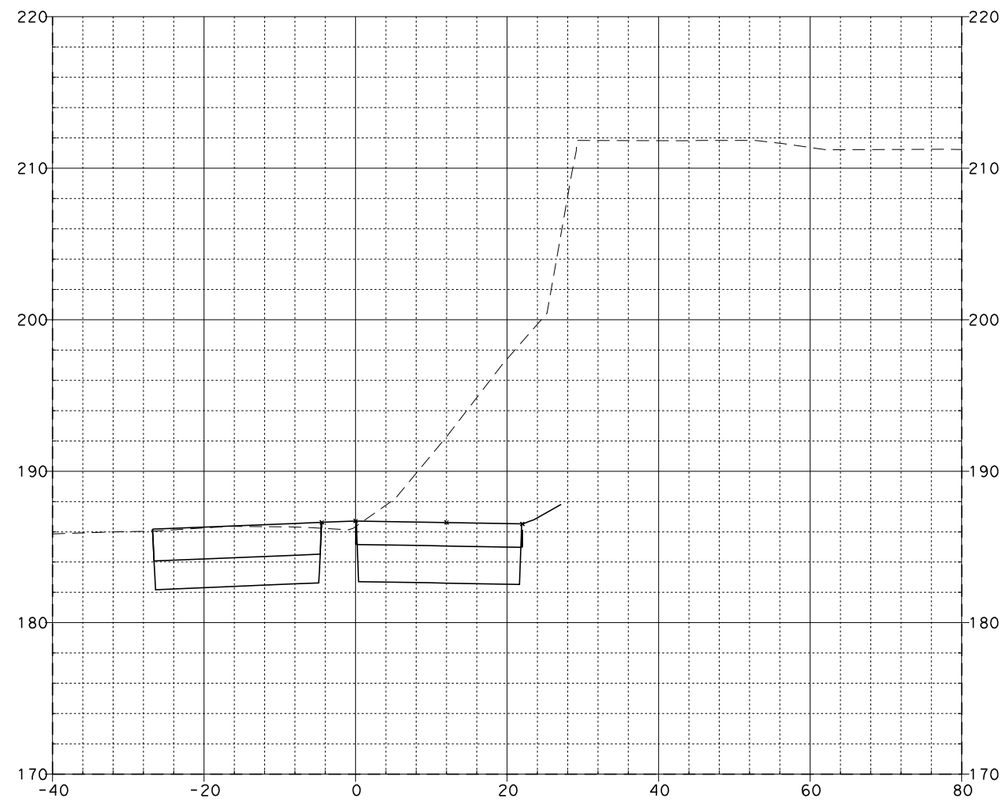

14+37.94

BALL LOOP ON-RAMP "D-5"

08\03\11

Dist	COUNTY	ROUTE	POST MILES TOTAL PROJECT	SHEET No.	TOTAL SHEETS
12	Ora	57	12.2/15.2		

FOR EARTHWORK DEVELOPMENT ONLY

...\d0282599\Cross_Sections.dgn

EA 0F0401

SCALE: Horiz 1"=20'
Vert 1"=10'

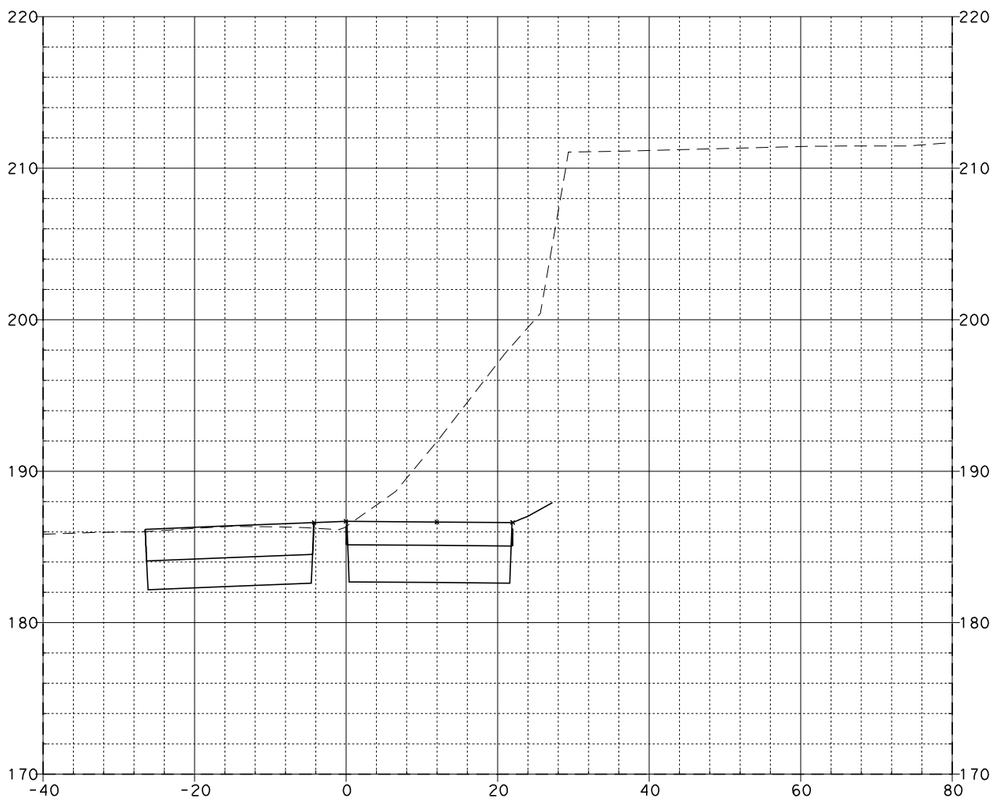

14+50.00

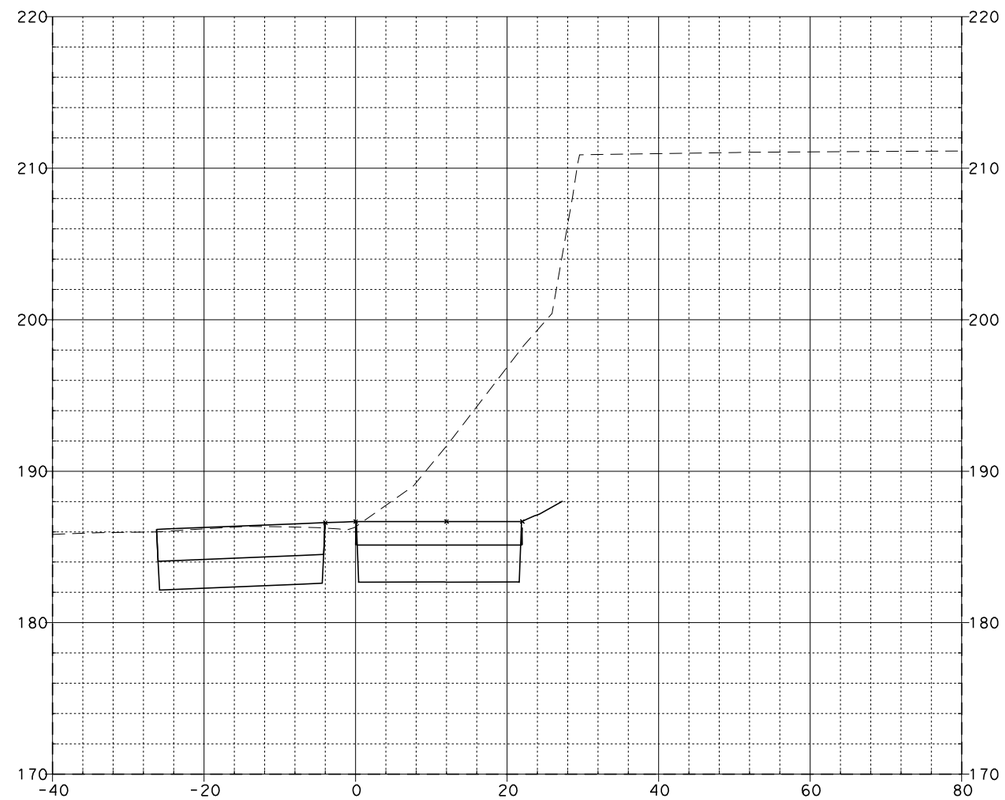

14+59.54

BALL LOOP ON-RAMP "D-5"

08\03\11

Dist	COUNTY	ROUTE	POST MILES TOTAL PROJECT	SHEET No.	TOTAL SHEETS
12	Ora	57	12.2/15.2		

FOR EARTHWORK DEVELOPMENT ONLY

...\d0282599\Cross_Sections.dgn

EA 0F0401

SCALE: Horiz 1"=20'
Vert 1"=10'

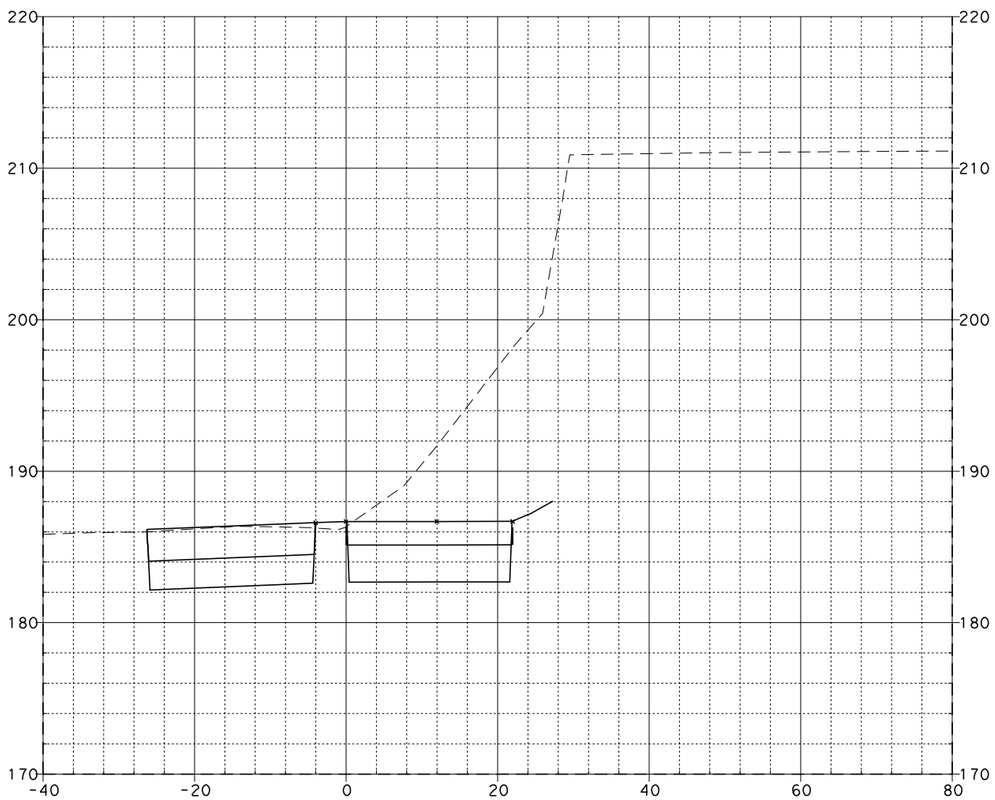

14+59.81

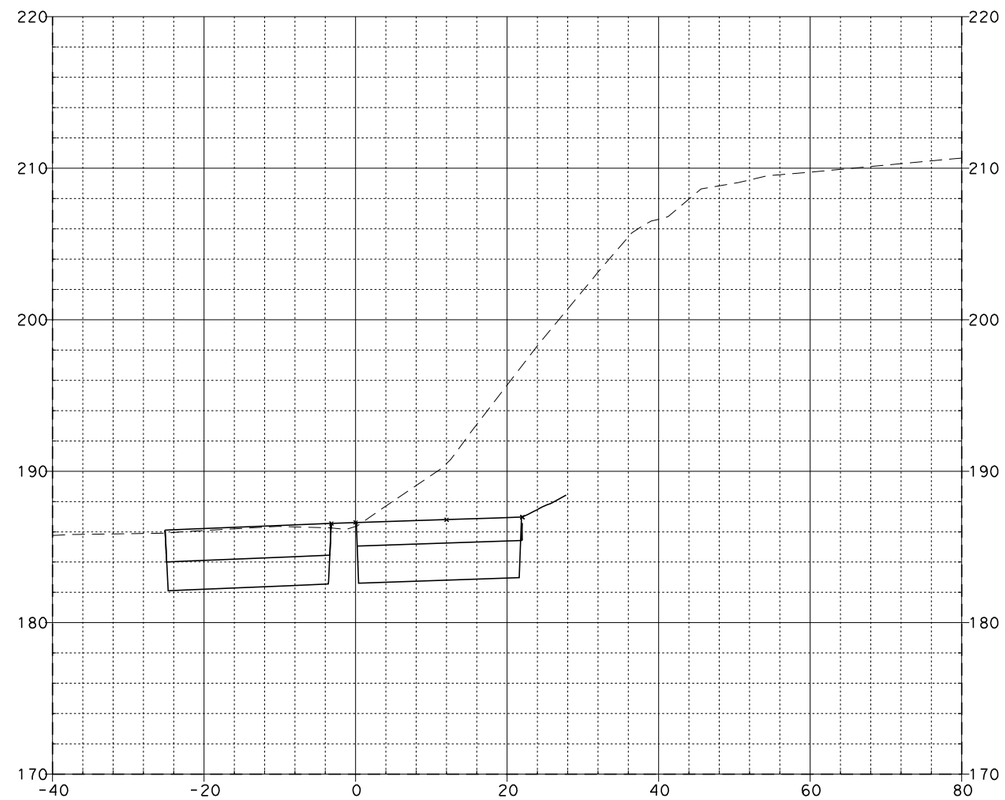

15+00.00

BALL LOOP ON-RAMP "D-5"

08\03\11

Dist	COUNTY	ROUTE	POST MILES TOTAL PROJECT	SHEET No.	TOTAL SHEETS
12	Ora	57	12.2/15.2		

FOR EARTHWORK DEVELOPMENT ONLY

...\d0282599\Cross_Sections.dgn

EA 0F0401

SCALE: Horiz 1"=20'
Vert 1"=10'

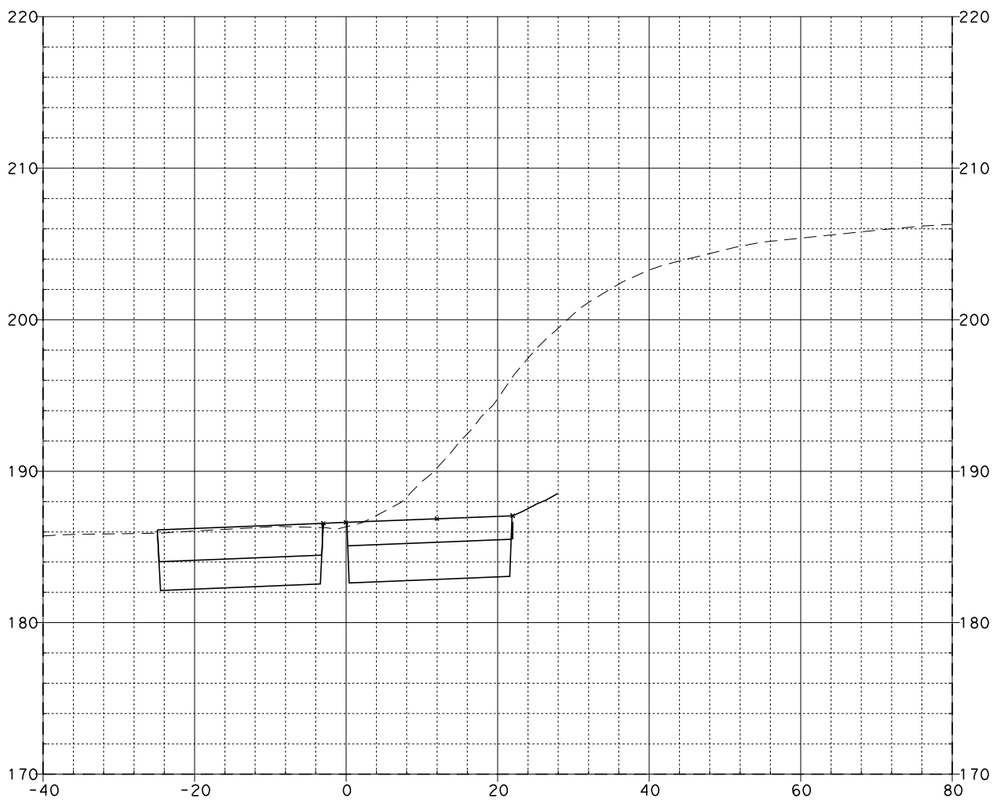

15+09.81

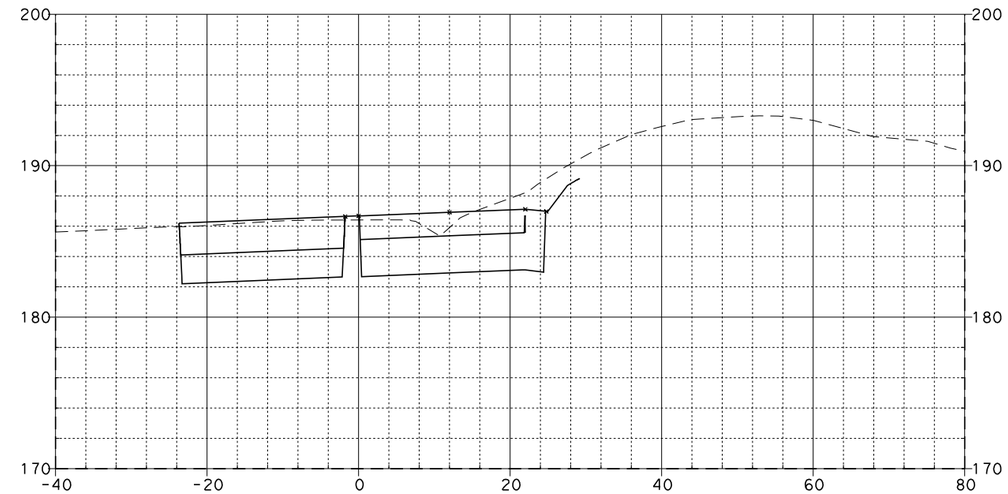

15+71.72

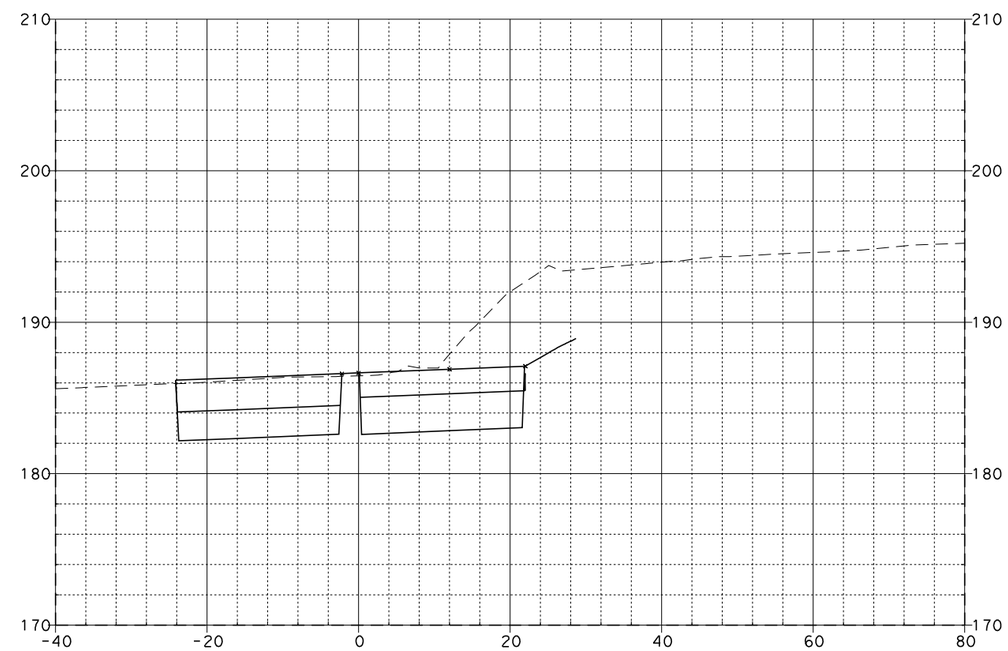

15+50.00

BALL LOOP ON-RAMP "D-5"

08\03\11

Dist	COUNTY	ROUTE	POST MILES TOTAL PROJECT	SHEET No.	TOTAL SHEETS
12	Ora	57	12.2/15.2		

FOR EARTHWORK DEVELOPMENT ONLY

...\d0282599\Cross_Sections.dgn

EA 0F0401

SCALE: Horiz 1"=20'
Vert 1"=10'

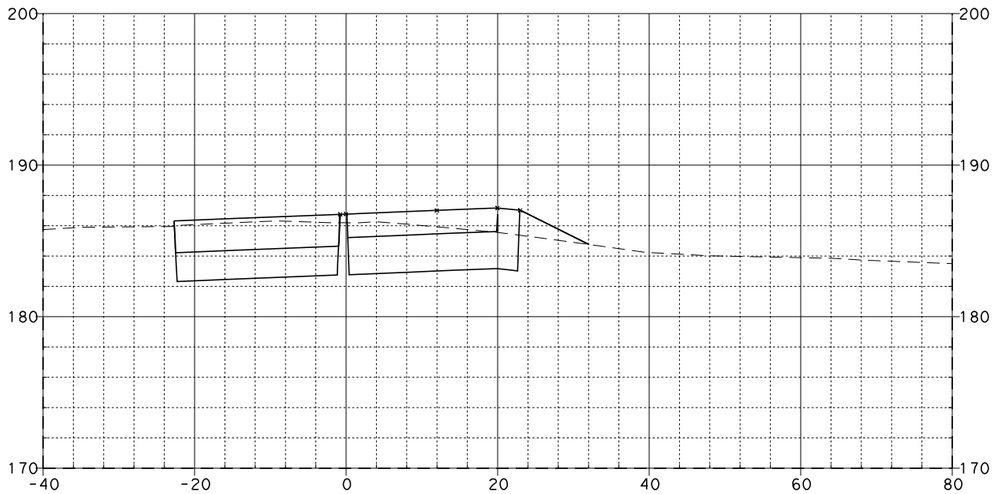

16+21.56

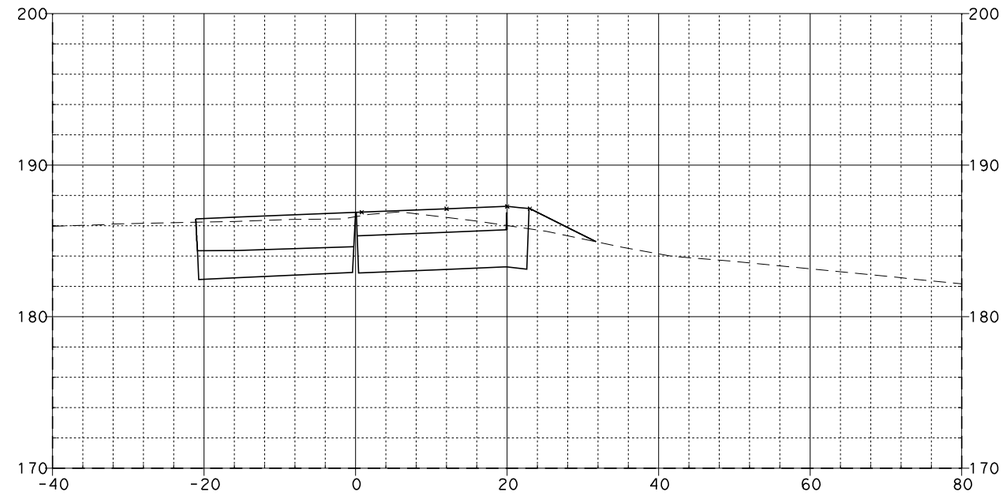

17+00.00

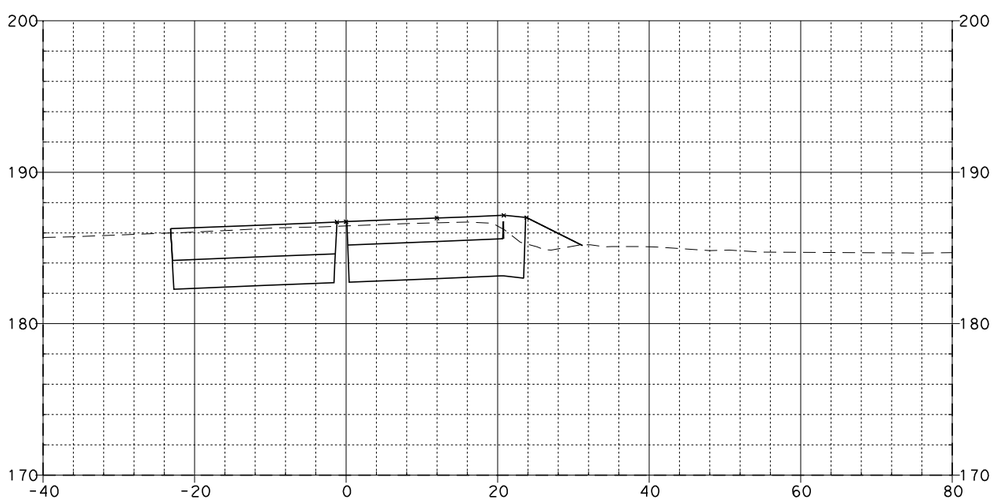

16+00.00

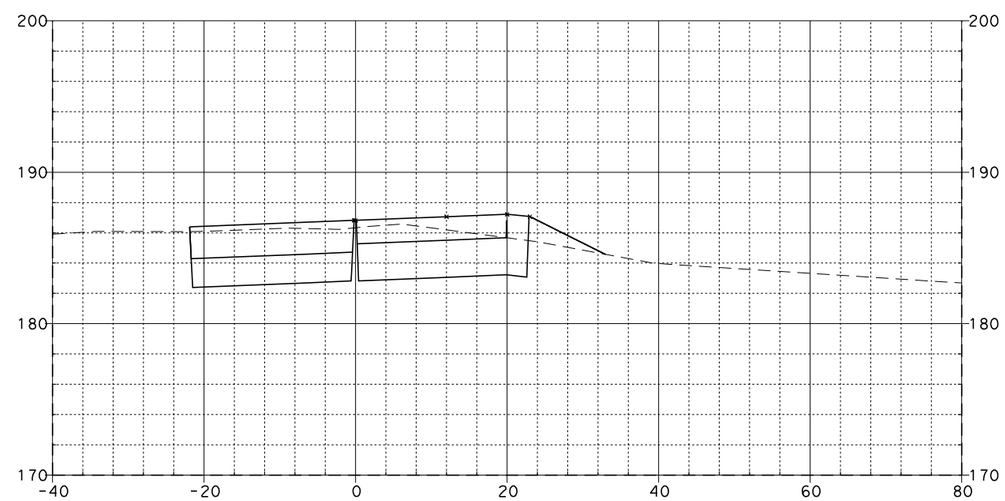

16+50.00

BALL LOOP ON-RAMP "D-5"

08\03\11

Dist	COUNTY	ROUTE	POST MILES TOTAL PROJECT	SHEET NO.	TOTAL SHEETS
12	Ora	57	12.2/15.2		

FOR EARTHWORK DEVELOPMENT ONLY

...\d0282599\Cross_Sections.dgn

EA 0F0401

SCALE: Horiz 1"=20'
Vert 1"=10'

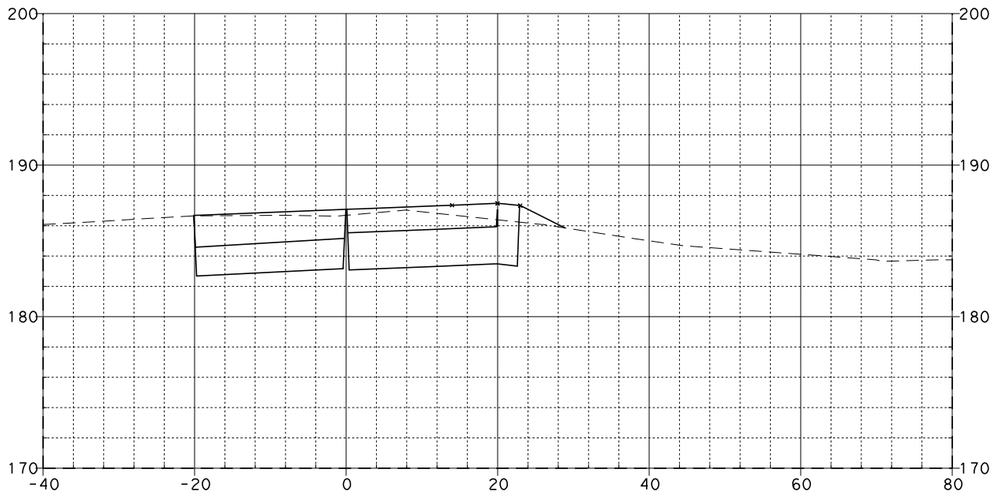

17+60.00

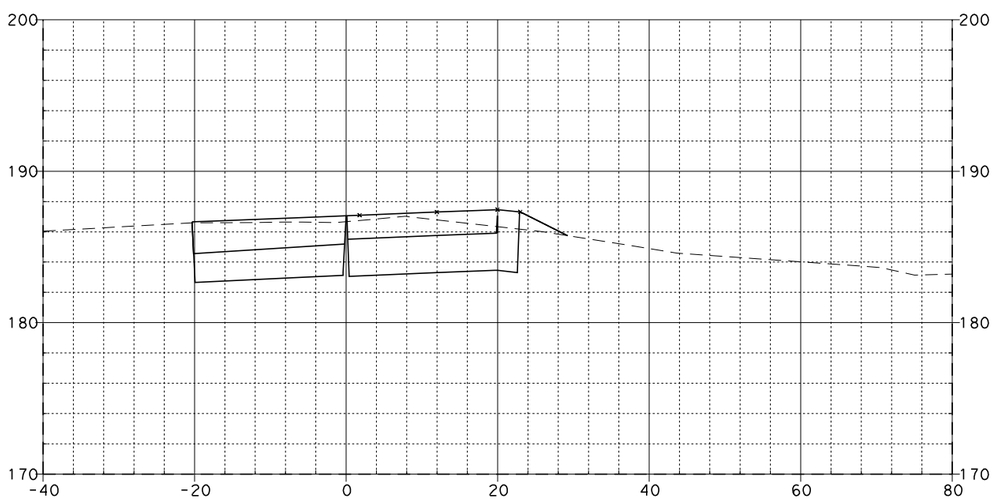

17+50.00

BALL LOOP ON-RAMP "D-5"

08\03\11

Dist	COUNTY	ROUTE	POST MILES TOTAL PROJECT	SHEET No.	TOTAL SHEETS
12	Ora	57	12.2/15.2		

FOR EARTHWORK DEVELOPMENT ONLY

...\d0282599\Cross_Sections.dgn

EA 0F0401

SCALE: Horiz 1"=20'
Vert 1"=10'

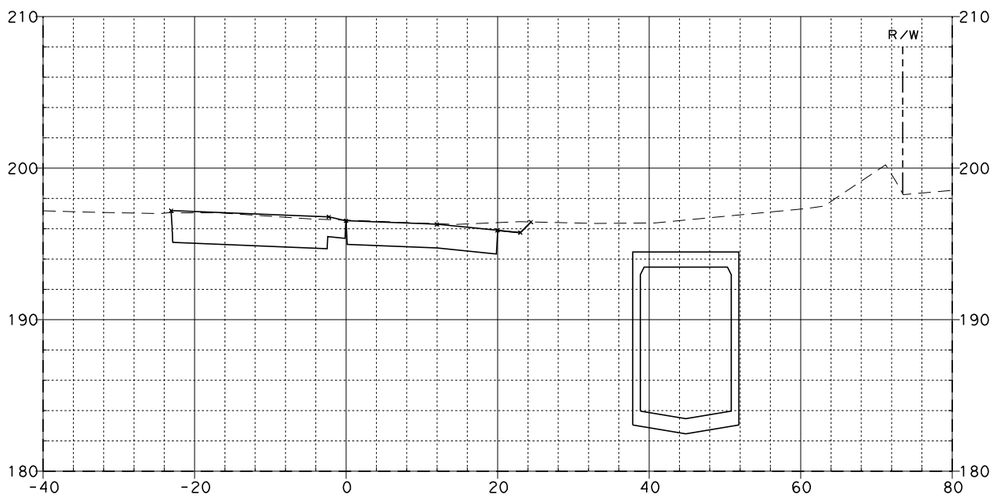

74+50.00

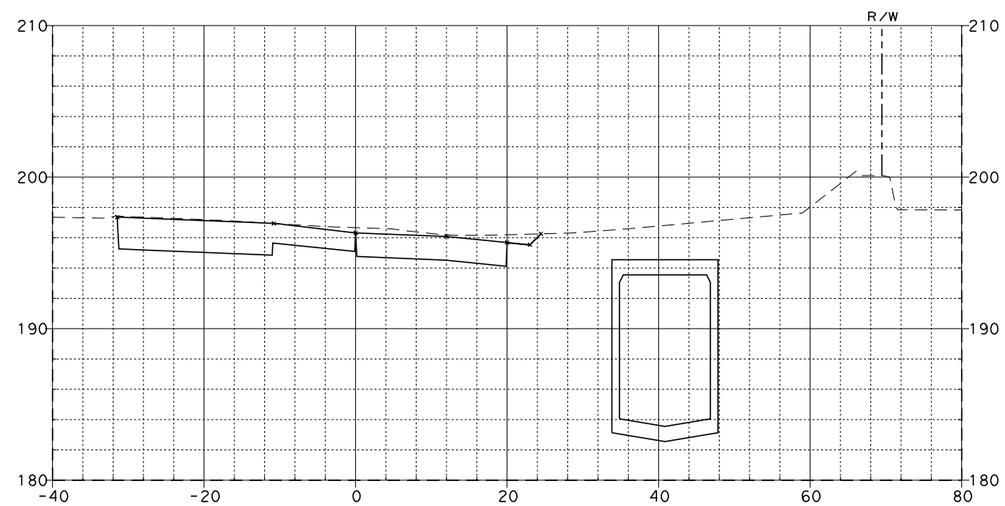

75+50.00

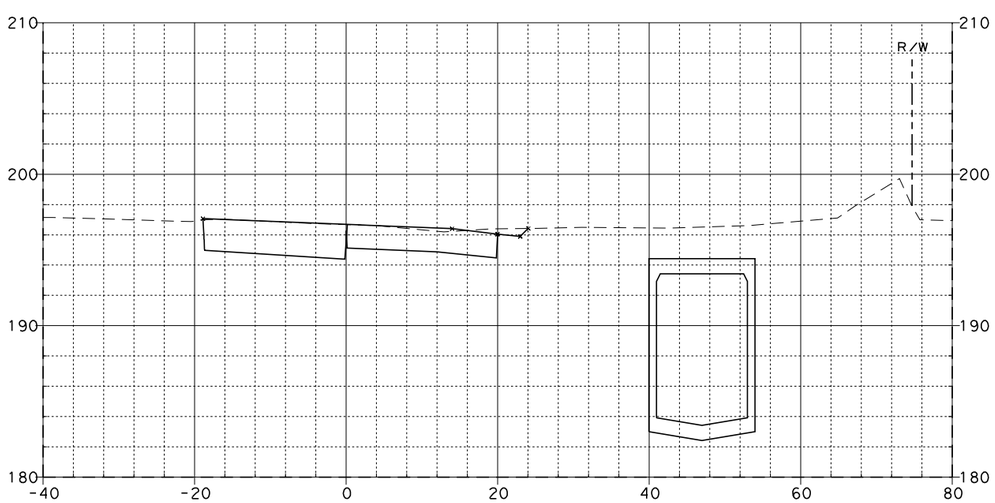

74+00.00

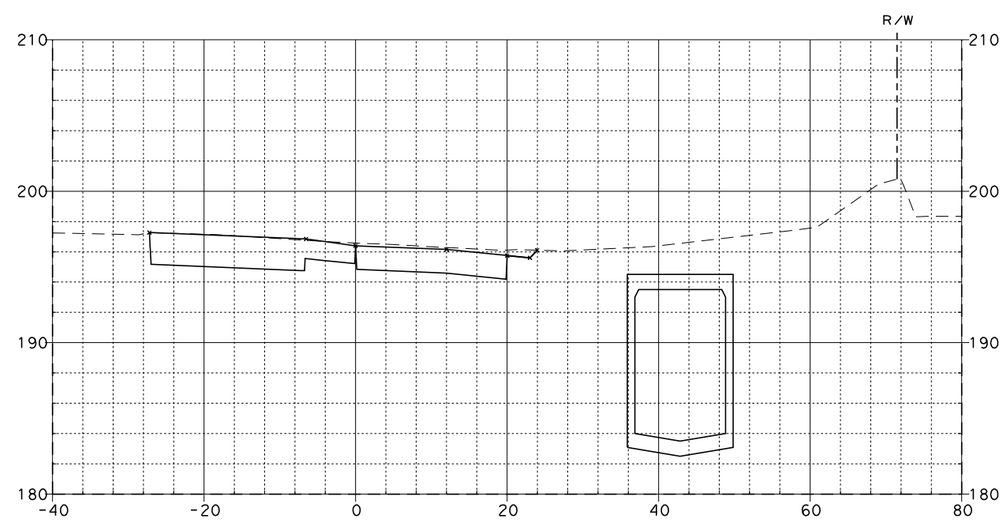

75+00.00

LINCOLN OFF-RAMP "E-2"

08\03\11

Dist	COUNTY	ROUTE	POST MILES TOTAL PROJECT	SHEET NO.	TOTAL SHEETS
12	Ora	57	12.2/15.2		

FOR EARTHWORK DEVELOPMENT ONLY

...\d0282599\Cross_Sections.dgn

EA 0F0401

SCALE: Horiz 1"=20'
Vert 1"=10'

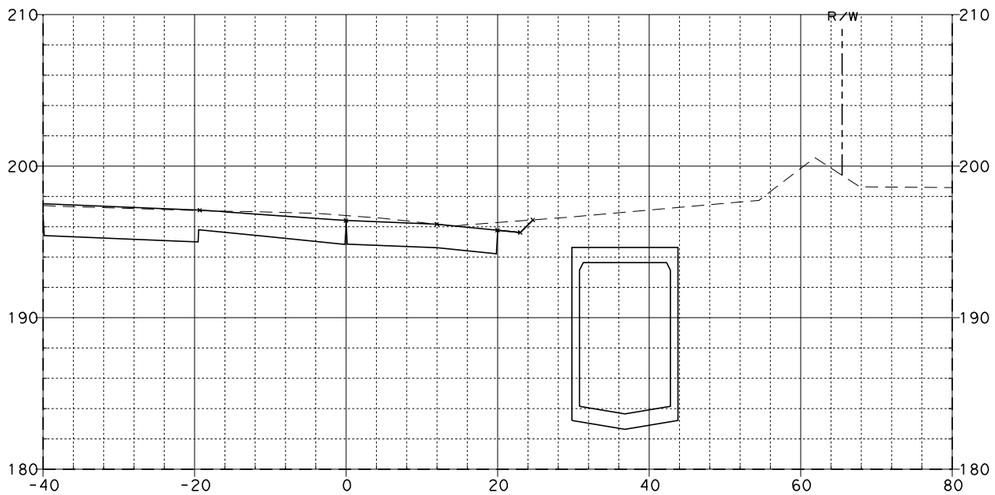

76+50.00

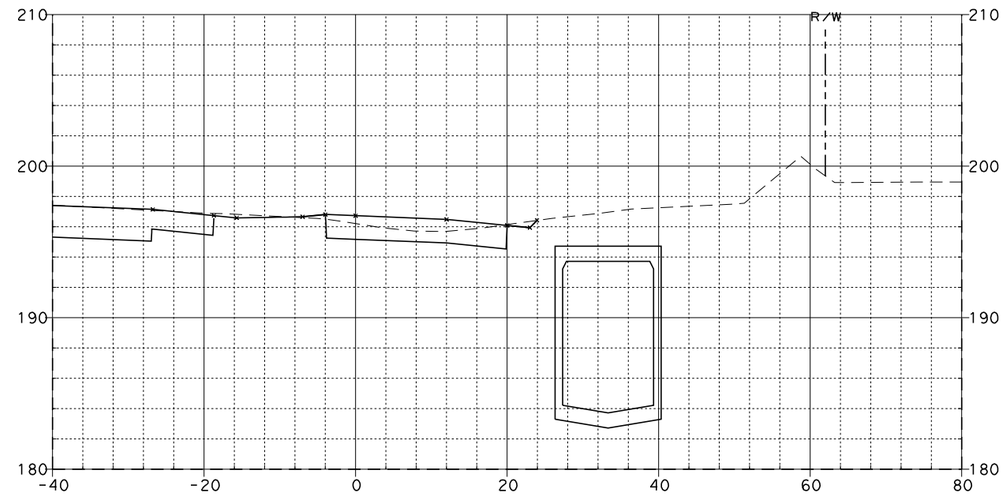

77+37.41

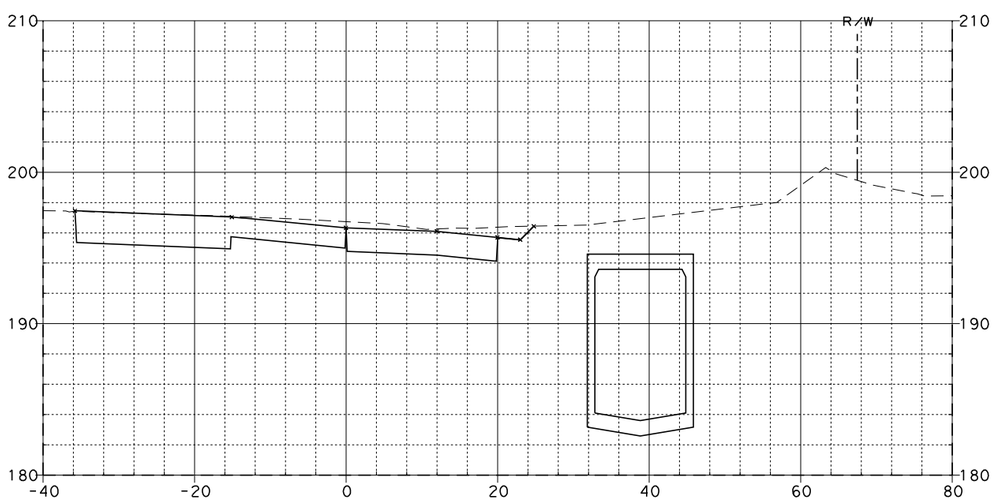

76+00.00

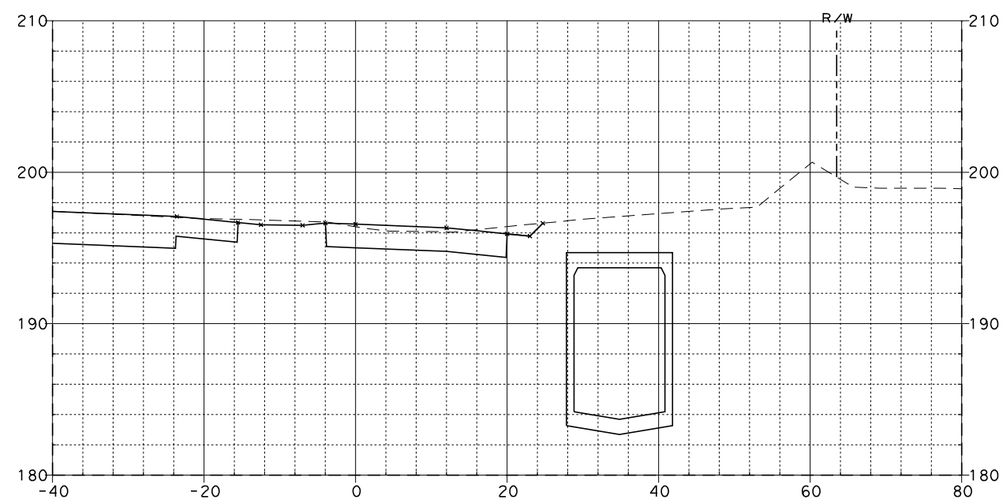

77+00.00

LINCOLN OFF-RAMP "E-2"

08\03\11

Dist	COUNTY	ROUTE	POST MILES TOTAL PROJECT	SHEET NO.	TOTAL SHEETS
12	Ora	57	12.2/15.2		

FOR EARTHWORK DEVELOPMENT ONLY

...\d0282599\Cross_Sections.dgn

EA 0F0401

SCALE: Horiz 1"=20'
Vert 1"=10'

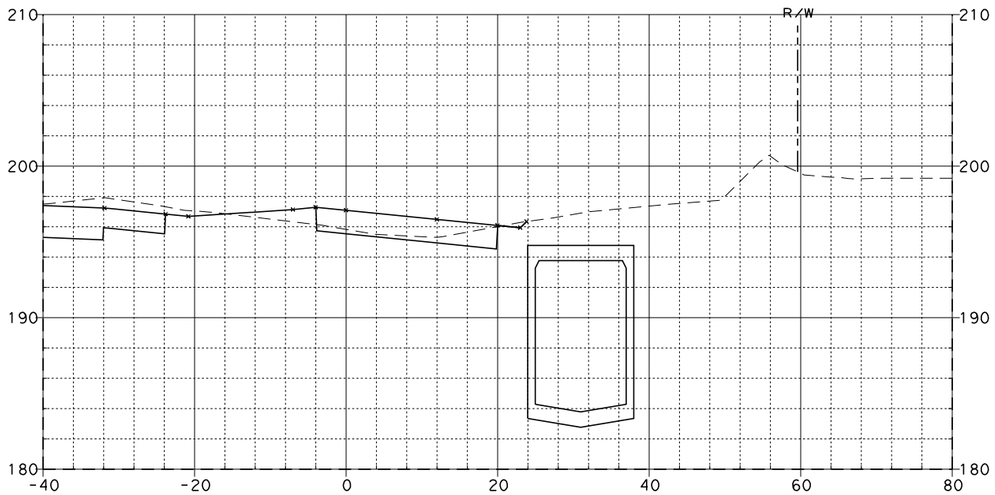

77+97.41

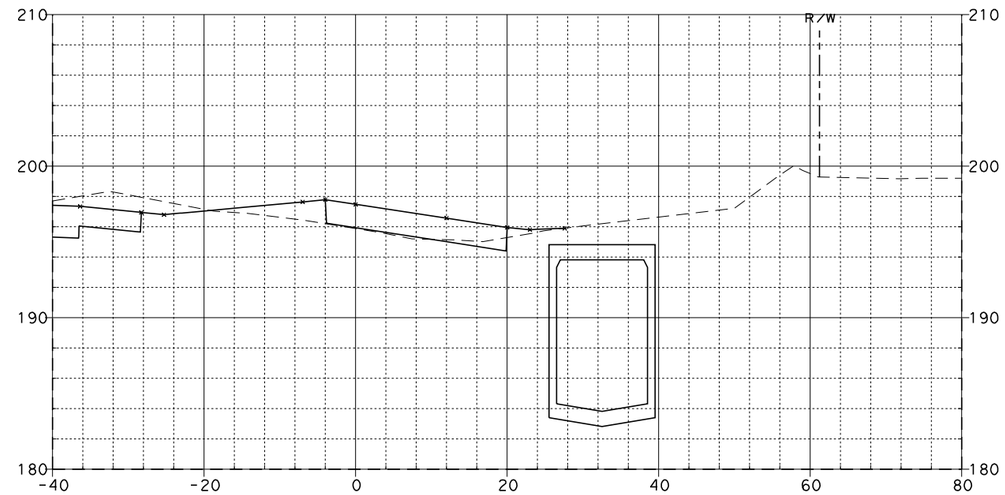

78+50.00

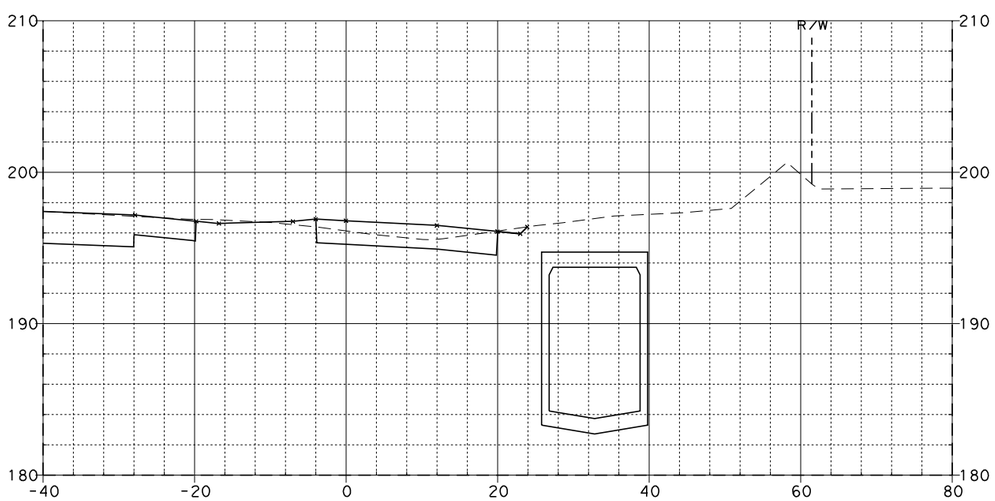

77+50.00

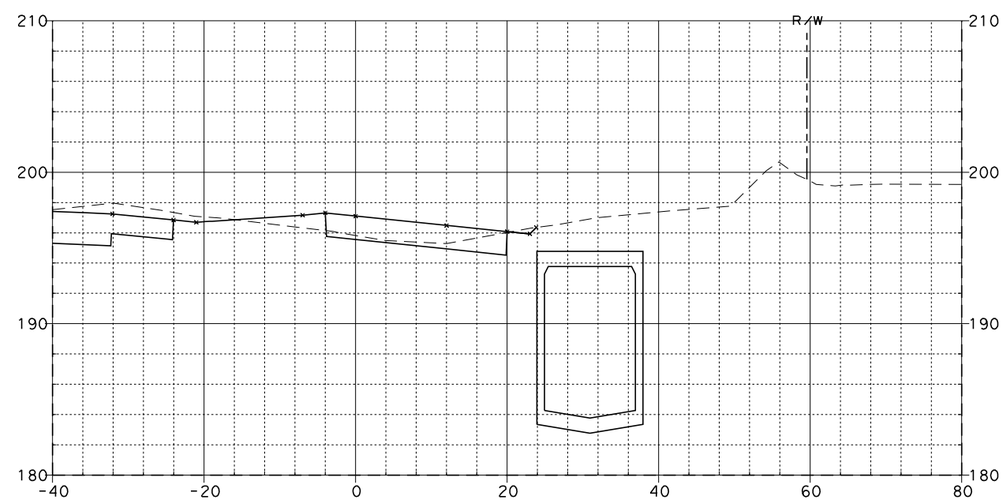

78+00.00

LINCOLN OFF-RAMP "E-2"

08\03\11

Dist	COUNTY	ROUTE	POST MILES TOTAL PROJECT	SHEET NO.	TOTAL SHEETS
12	Ora	57	12.2/15.2		

FOR EARTHWORK DEVELOPMENT ONLY

...\d0282599\Cross_Sections.dgn

EA 0F0401

SCALE: Horiz 1"=20'
Vert 1"=10'

08\03\11

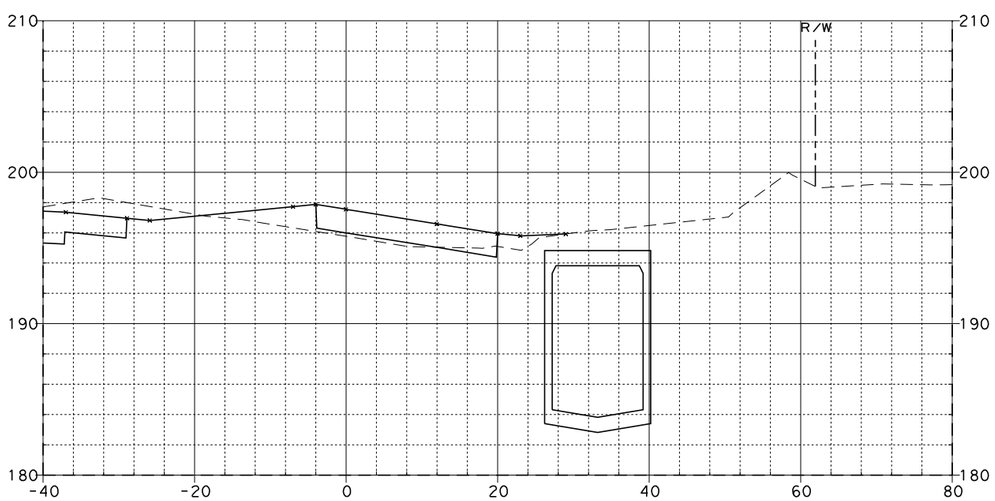

78+57.41

LINCOLN OFF-RAMP "E-2"

Dist	COUNTY	ROUTE	POST MILES TOTAL PROJECT	SHEET No.	TOTAL SHEETS
12	Ora	57	12.2/15.2		

FOR EARTHWORK DEVELOPMENT ONLY

...\d0282599\Cross_Sections.dgn

EA 0F0401

SCALE: Horiz 1"=20'
Vert 1"=10'

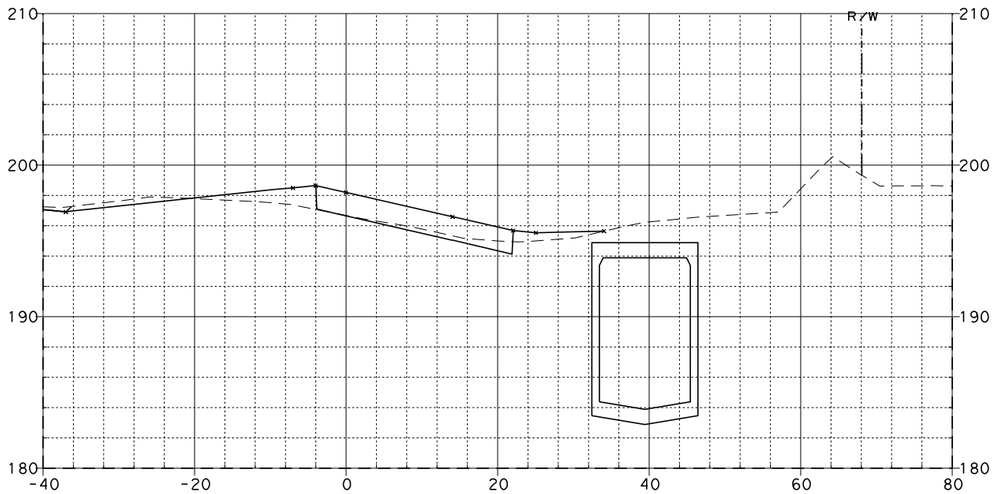

79+25.00

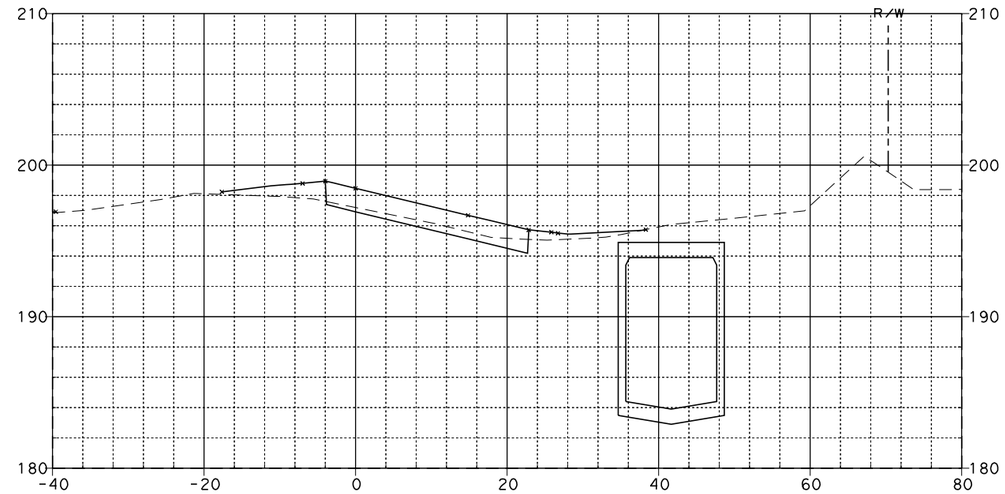

79+50.00

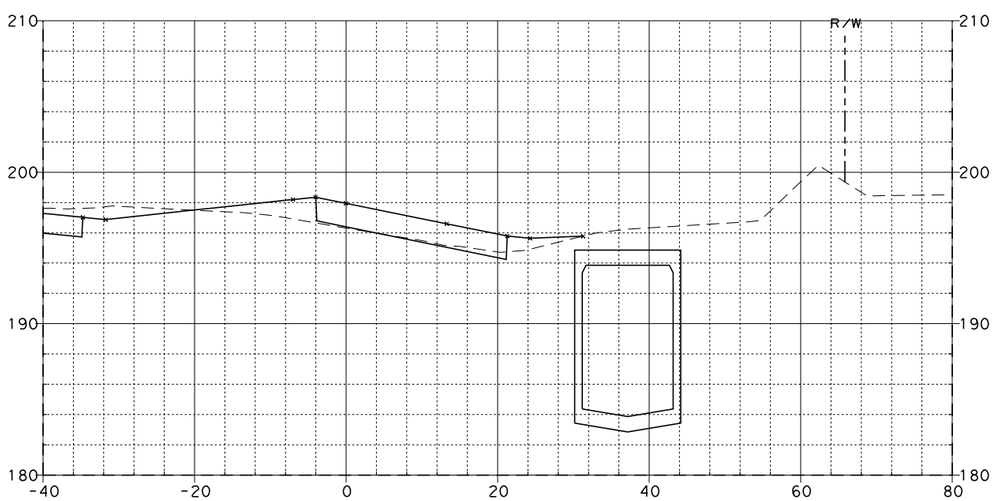

79+00.00

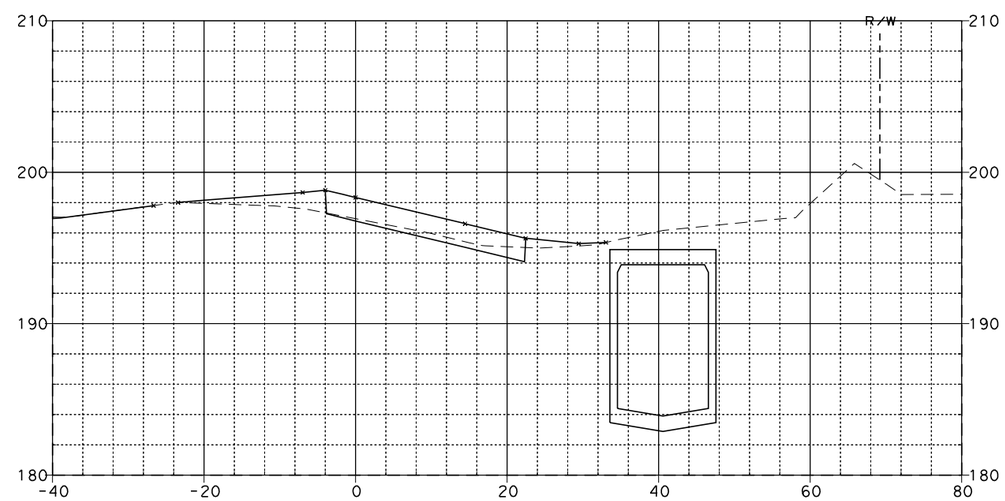

79+37.41

LINCOLN OFF-RAMP "E-2"

08\03\11

Dist	COUNTY	ROUTE	POST MILES TOTAL PROJECT	SHEET NO.	TOTAL SHEETS
12	Ora	57	12.2/15.2		

FOR EARTHWORK DEVELOPMENT ONLY

...\d0282599\Cross_Sections.dgn

EA 0F0401

SCALE: Horiz 1"=20'
Vert 1"=10'

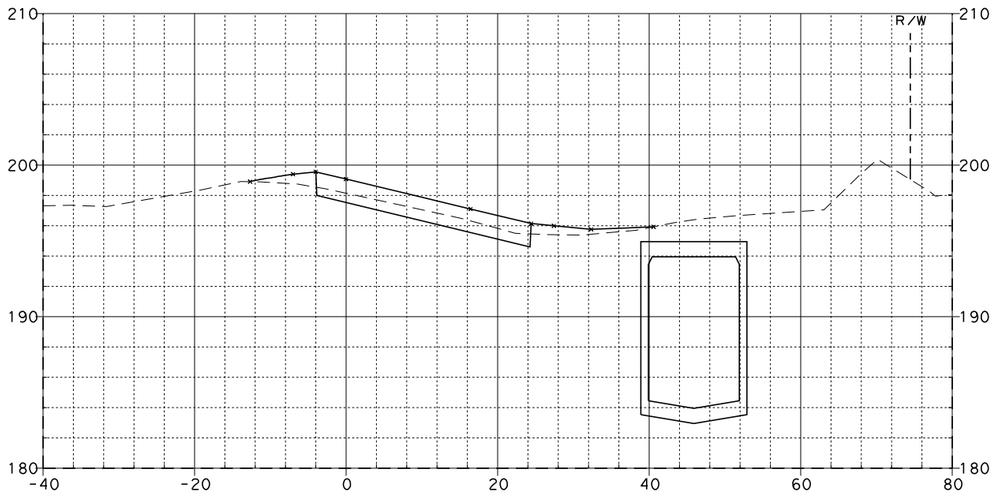

80+00.00

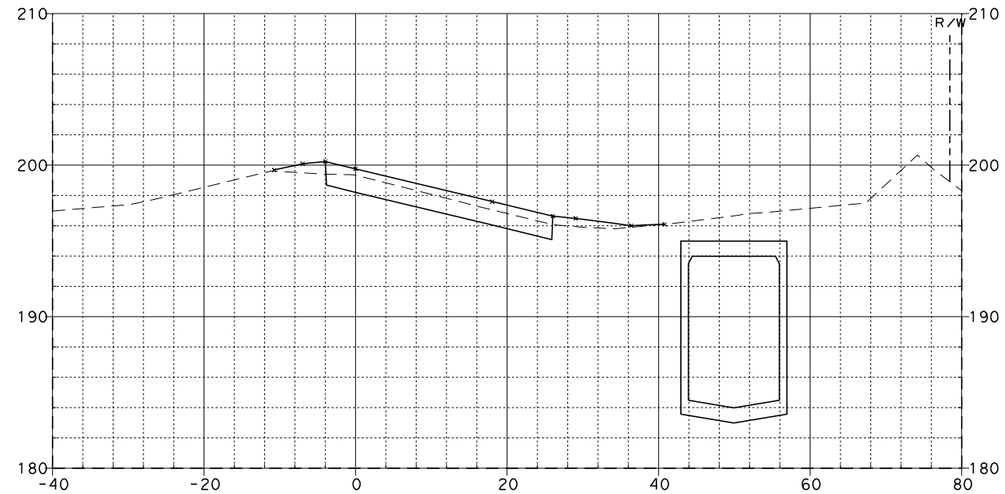

80+50.00

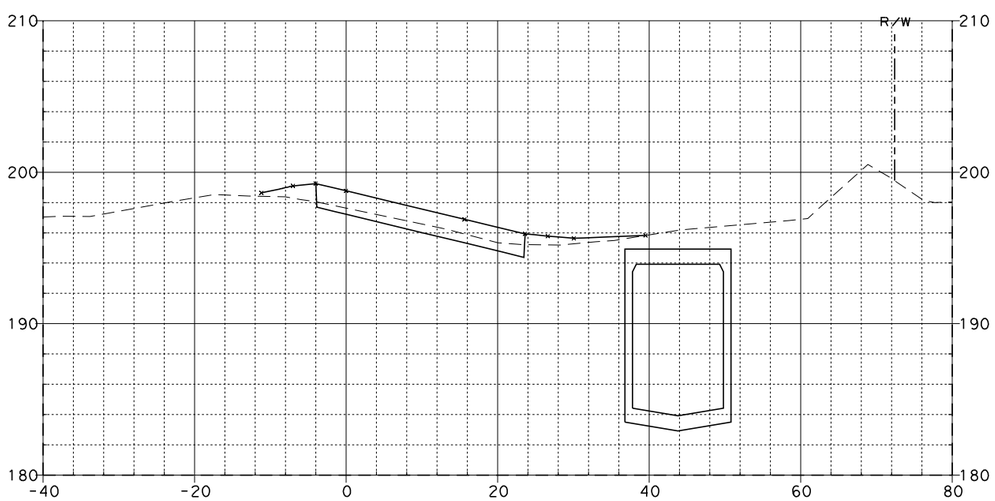

79+75.00

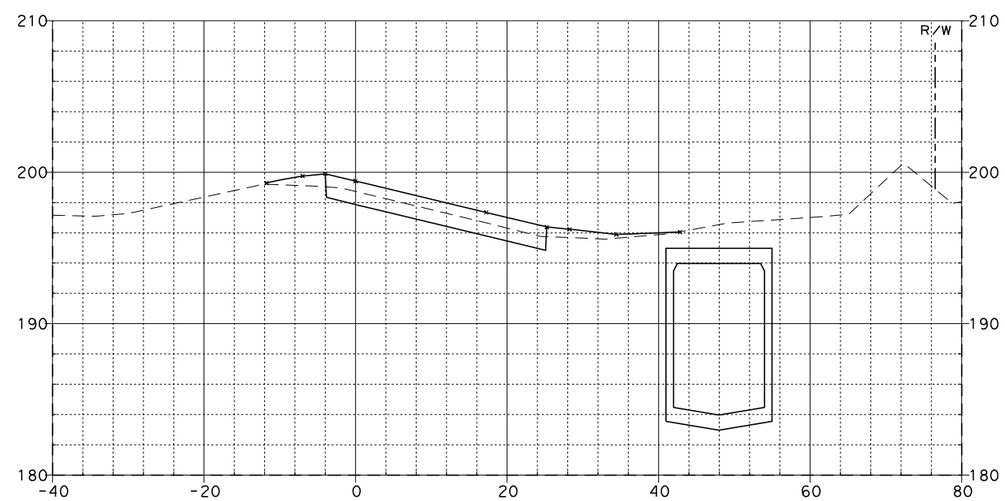

80+25.00

LINCOLN OFF-RAMP "E-2"

08\03\11

Dist	COUNTY	ROUTE	POST MILES TOTAL PROJECT	SHEET NO.	TOTAL SHEETS
12	Ora	57	12.2/15.2		

FOR EARTHWORK DEVELOPMENT ONLY

...\d0282599\Cross_Sections.dgn

EA 0F0401

SCALE: Horiz 1"=20'
Vert 1"=10'

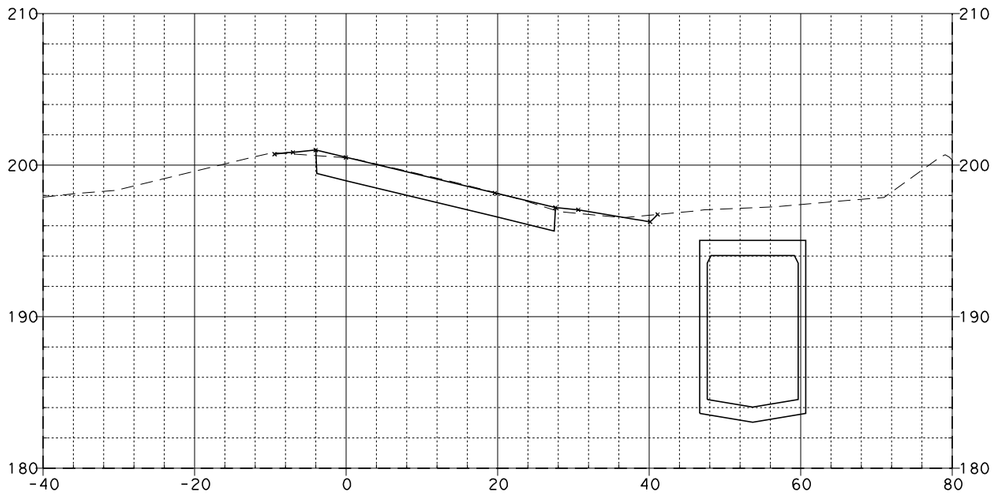

81+00.00

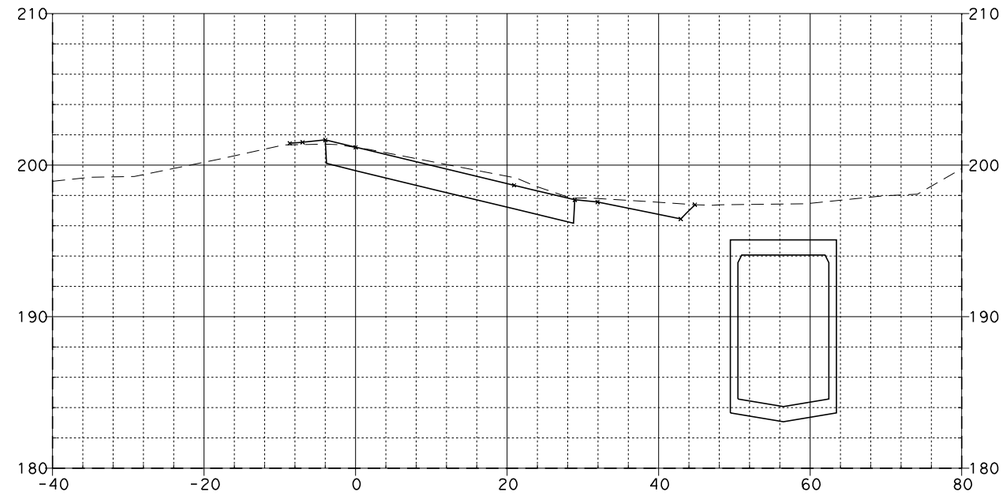

81+40.32

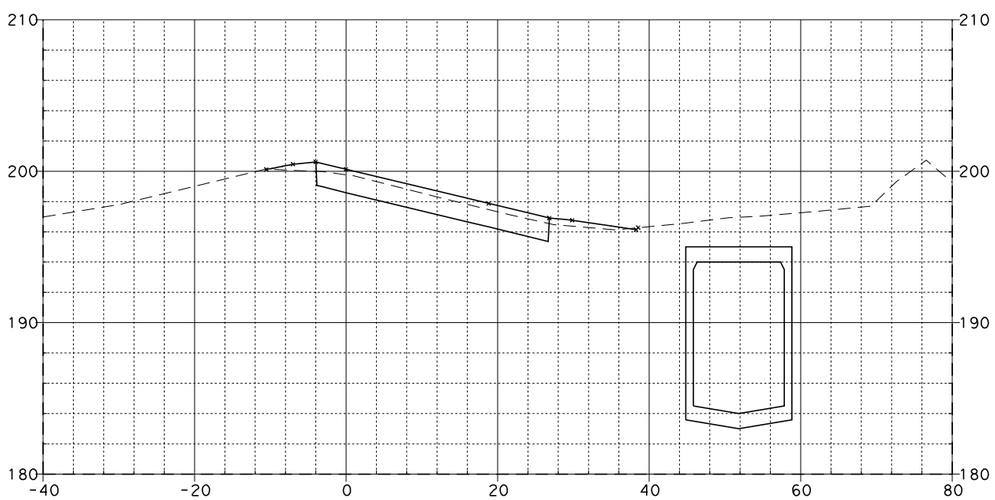

80+75.00

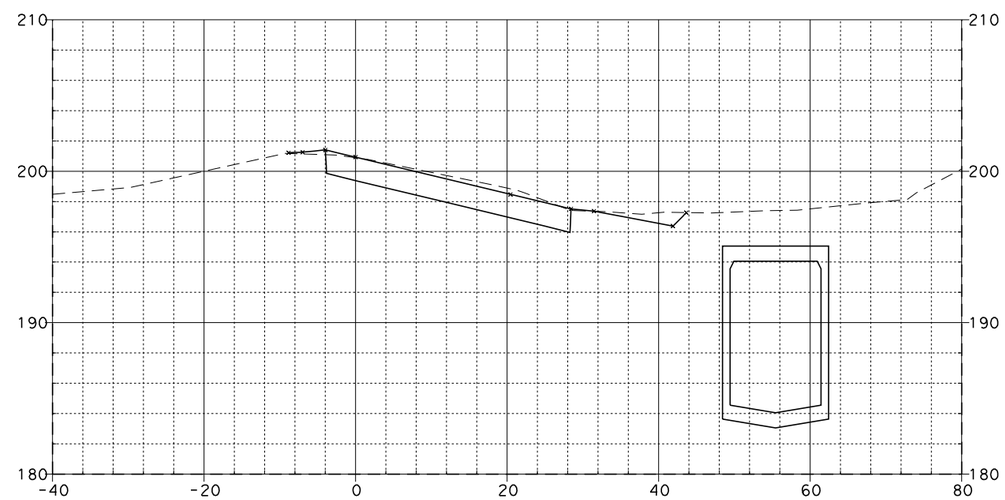

81+25.00

LINCOLN OFF-RAMP "E-2"

08\03\11

Dist	COUNTY	ROUTE	POST MILES TOTAL PROJECT	SHEET NO.	TOTAL SHEETS
12	Ora	57	12.2/15.2		

FOR EARTHWORK DEVELOPMENT ONLY

...\d0282599\Cross_Sections.dgn

EA 0F0401

SCALE: Horiz 1"=20'
Vert 1"=10'

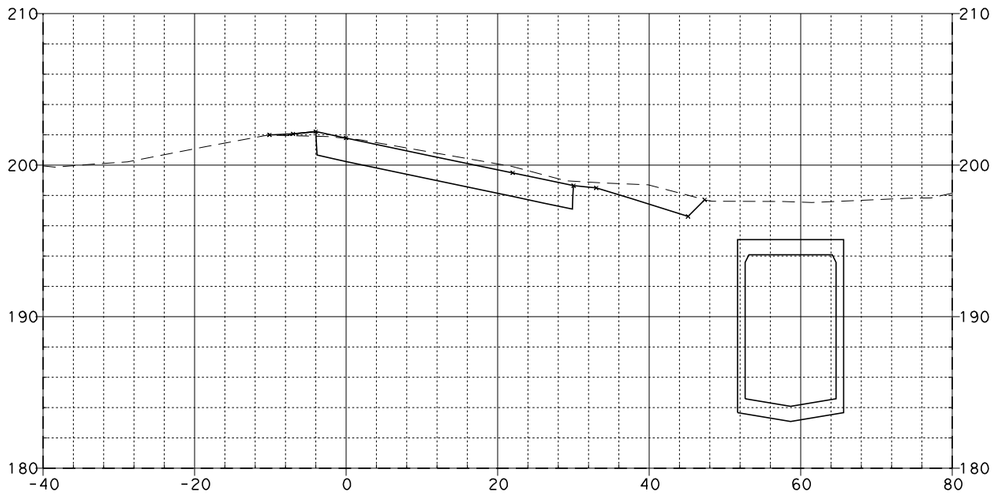

81+75.00

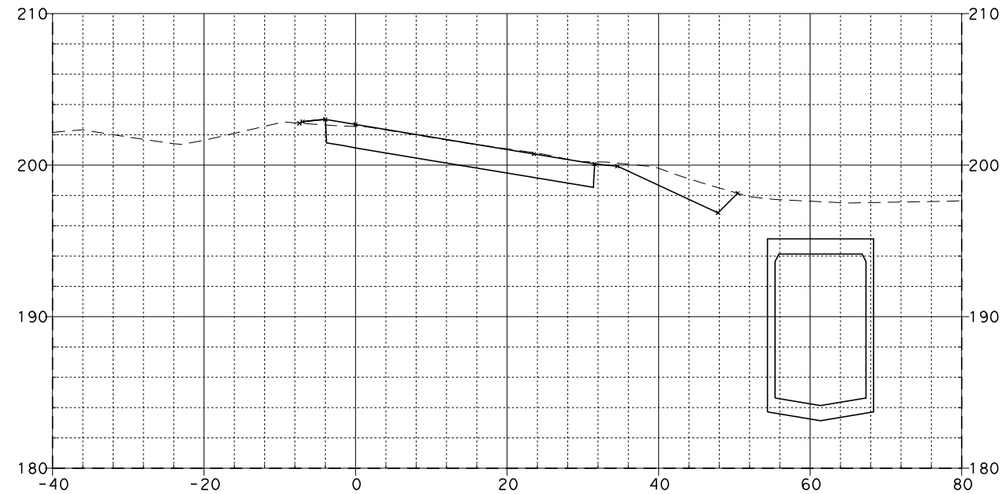

82+25.00

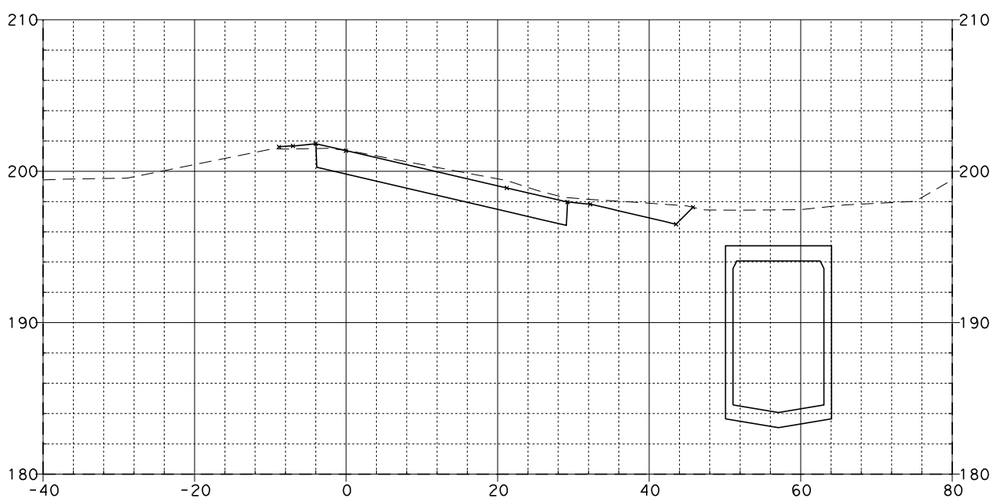

81+50.00

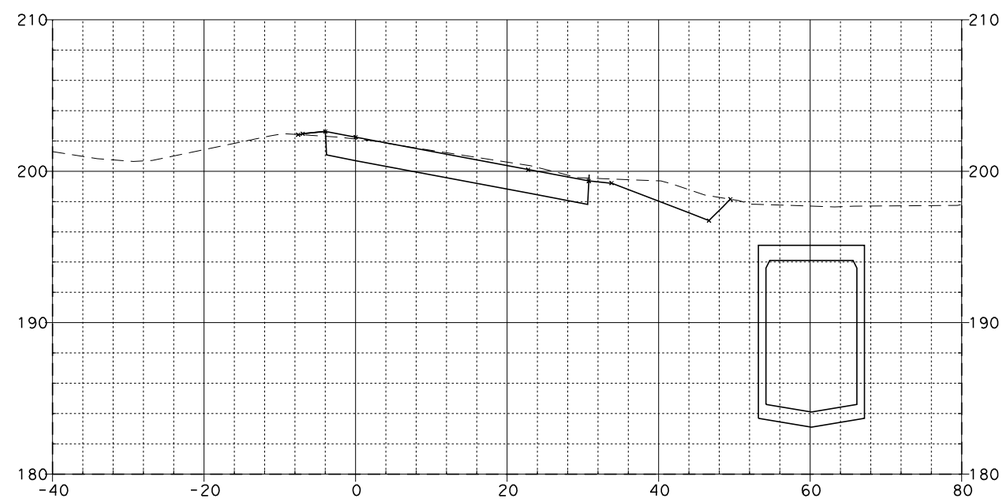

82+00.00

LINCOLN OFF-RAMP "E-2"

08\03\11

Dist	COUNTY	ROUTE	POST MILES TOTAL PROJECT	SHEET NO.	TOTAL SHEETS
12	Ora	57	12.2/15.2		

FOR EARTHWORK DEVELOPMENT ONLY

...\d0282599\Cross_Sections.dgn

EA 0F0401

SCALE: Horiz 1"=20'
Vert 1"=10'

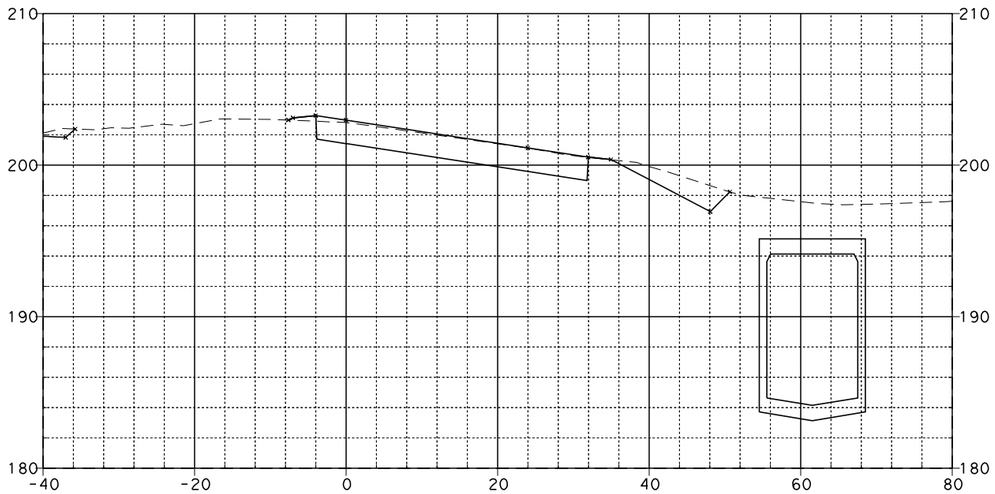

82+40.34

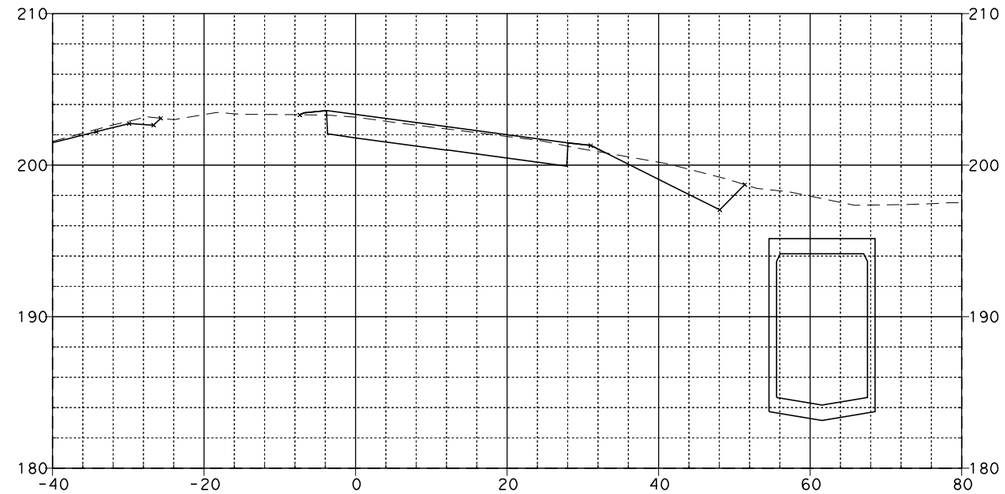

82+61.36

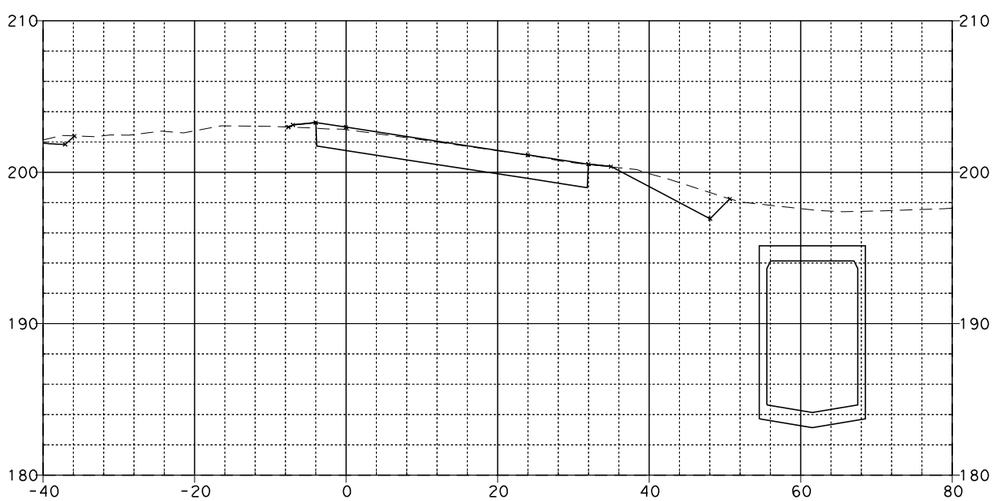

82+40.21

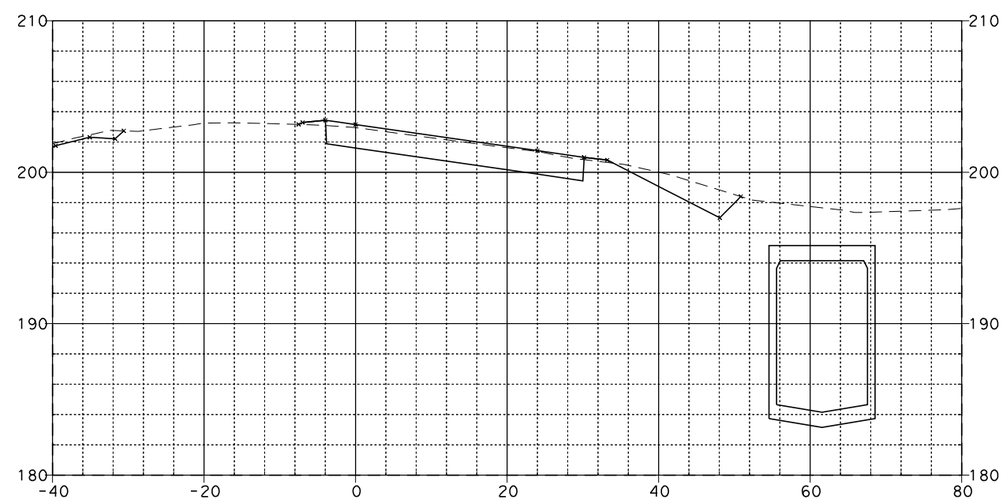

82+50.00

LINCOLN OFF-RAMP "E-2"

08\03\11

Dist	COUNTY	ROUTE	POST MILES TOTAL PROJECT	SHEET NO.	TOTAL SHEETS
12	Ora	57	12.2/15.2		

FOR EARTHWORK DEVELOPMENT ONLY

...\d0282599\Cross_Sections.dgn

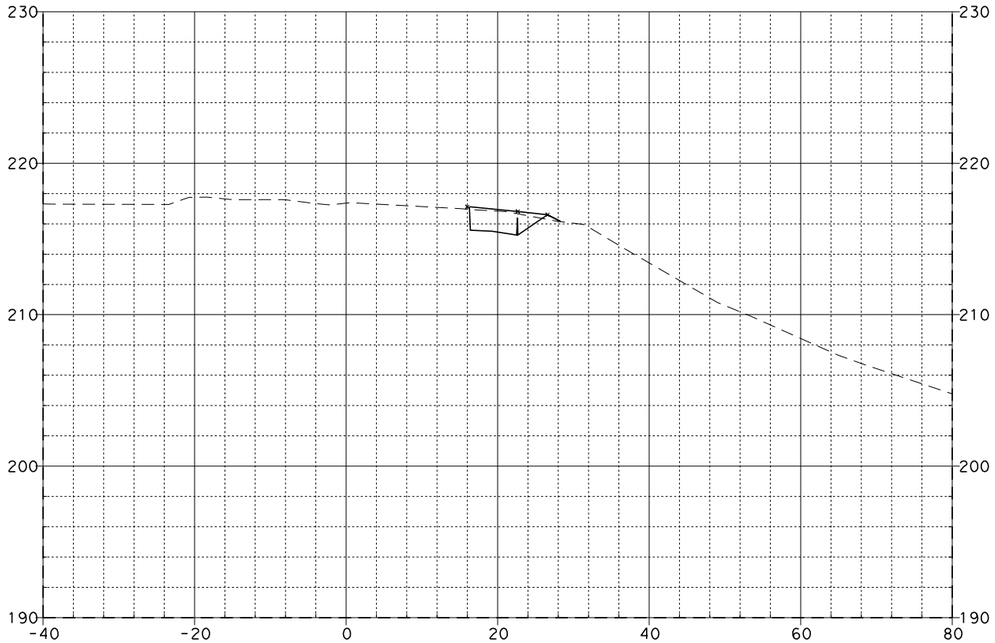

77+75.00

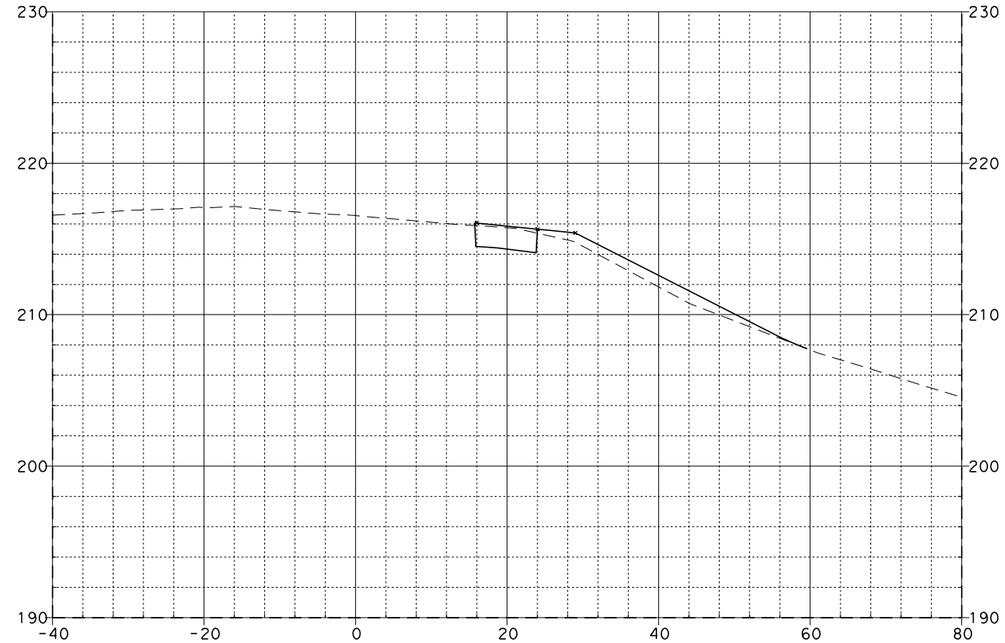

78+00.00

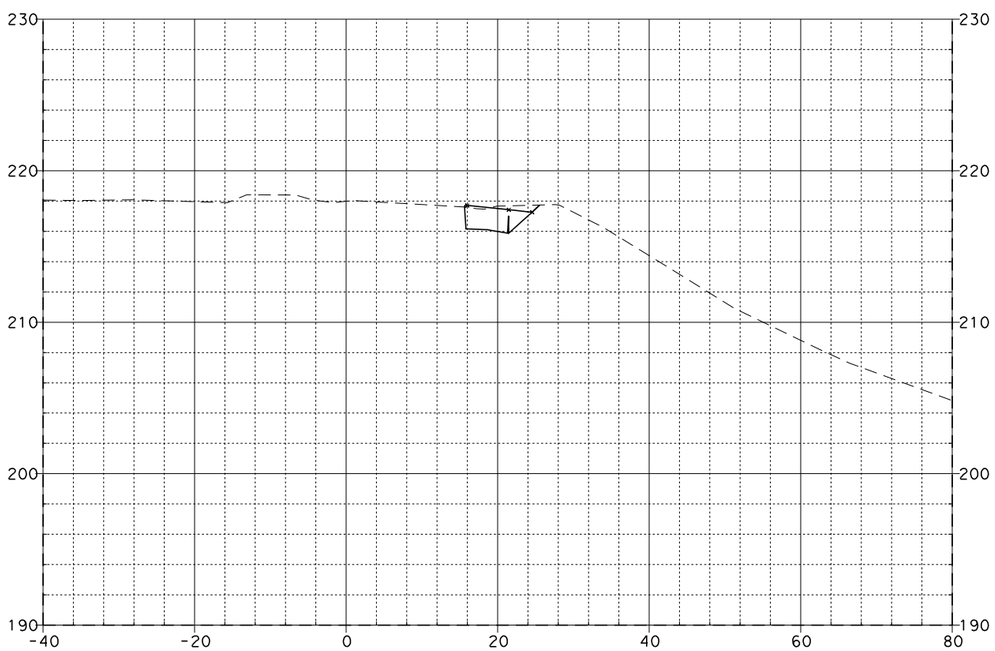

77+59.93

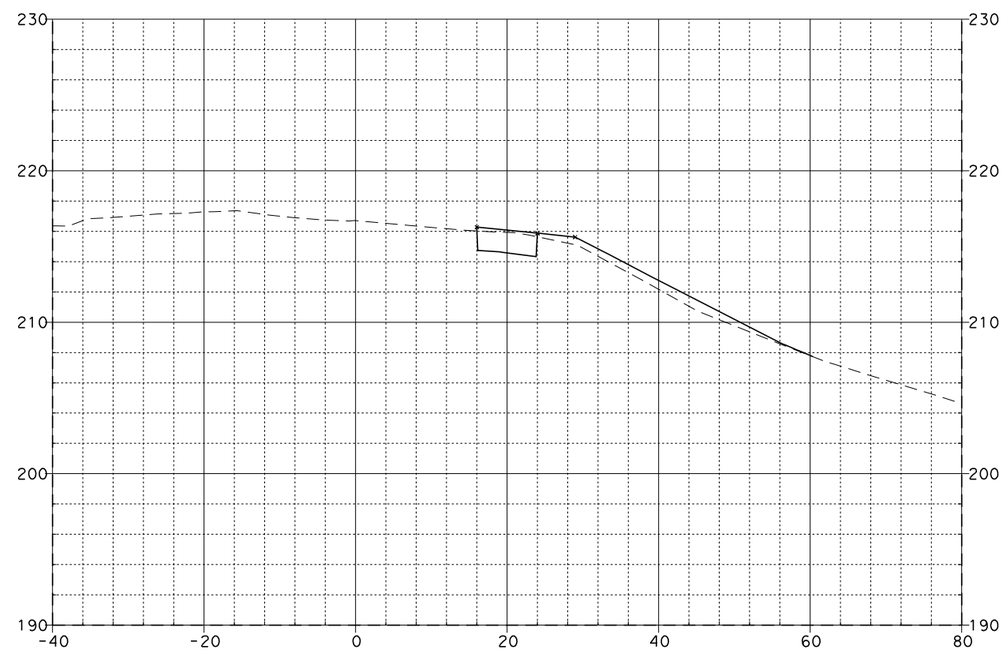

77+95.11

LINCOLN LOOP ON-RAMP "E-5"

EA 0F0401

SCALE: Horiz 1"=20'
Vert 1"=10'

08\03\11

Dist	COUNTY	ROUTE	POST MILES TOTAL PROJECT	SHEET No.	TOTAL SHEETS
12	Ora	57	12.2/15.2		

FOR EARTHWORK DEVELOPMENT ONLY

...\d0282599\Cross_Sections.dgn

EA 0F0401

SCALE: Horiz 1"=20'
Vert 1"=10'

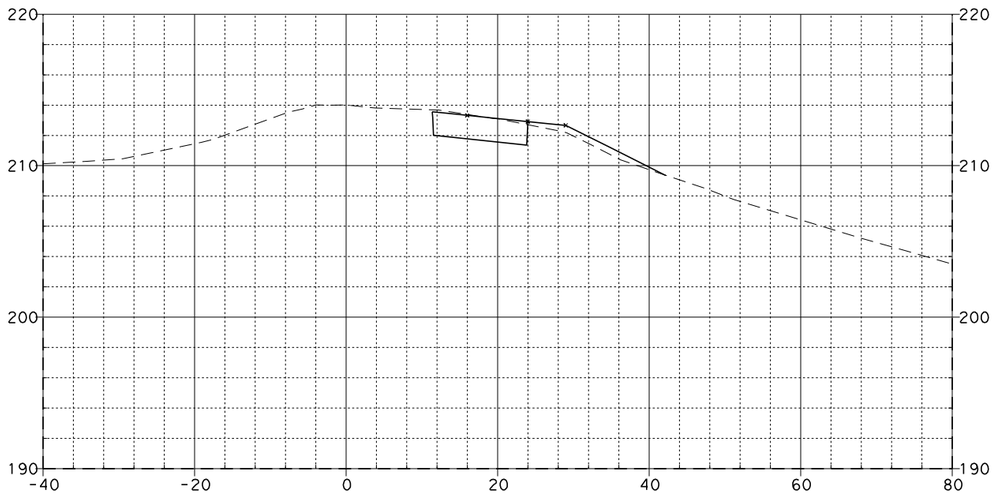

78+50.00

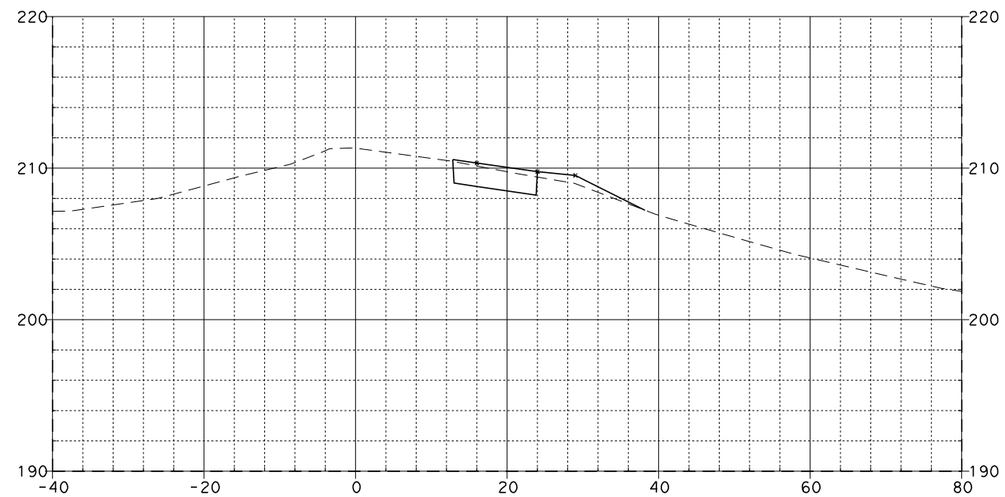

79+00.00

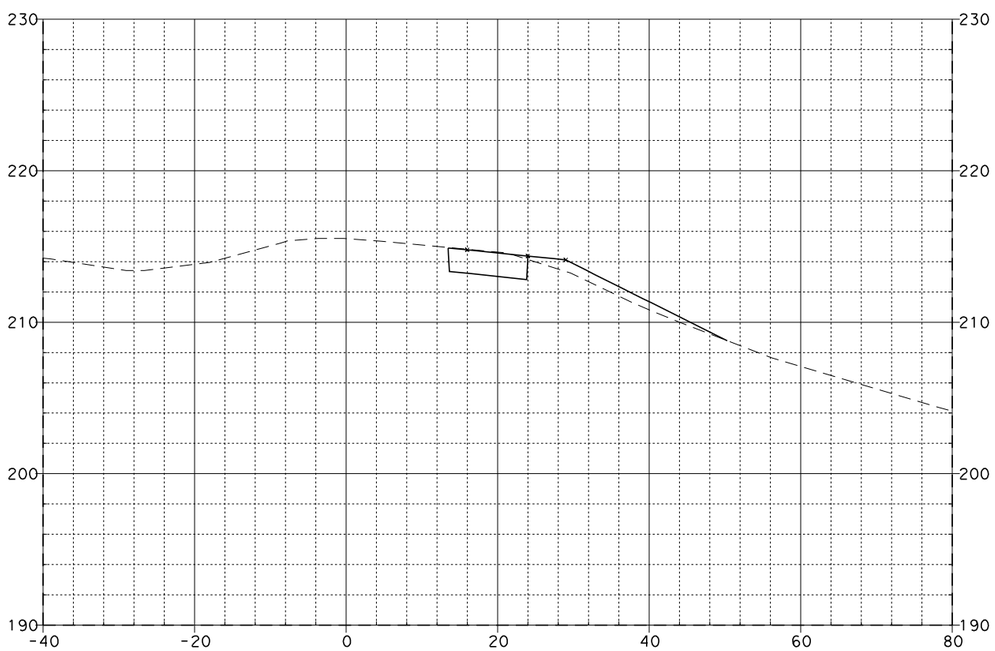

78+25.00

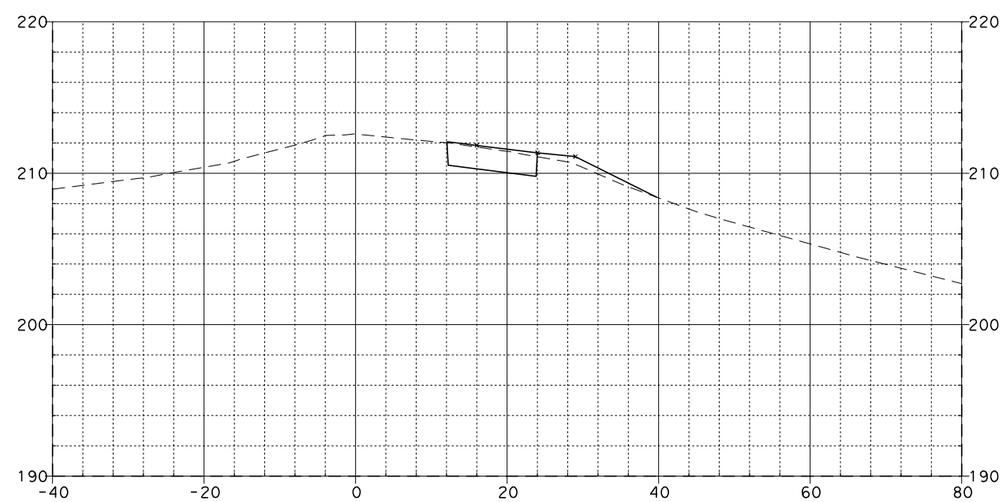

78+75.00

LINCOLN LOOP ON-RAMP "E-5"

08\03\11

Dist	COUNTY	ROUTE	POST MILES TOTAL PROJECT	SHEET No.	TOTAL SHEETS
12	Ora	57	12.2/15.2		

FOR EARTHWORK DEVELOPMENT ONLY

...\d0282599\Cross_Sections.dgn

EA 0F0401

SCALE: Horiz 1"=20'
Vert 1"=10'

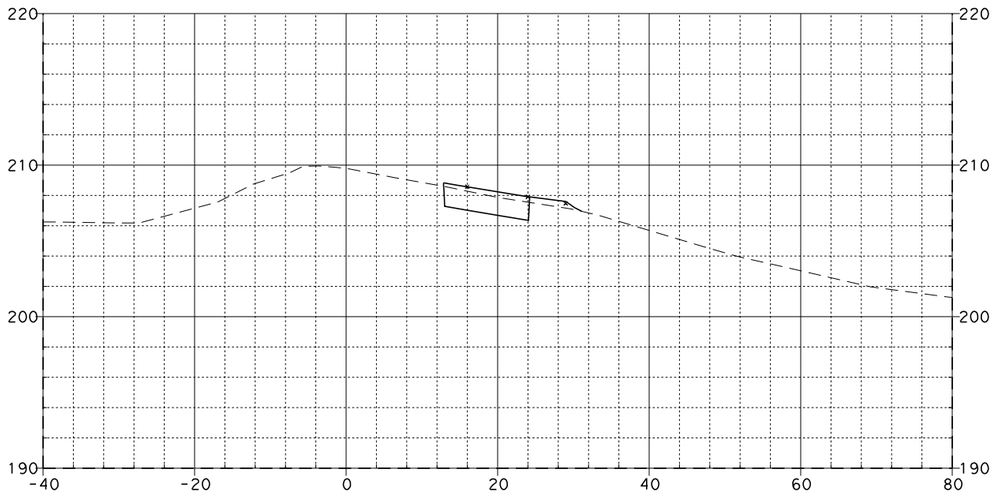

79+28.88

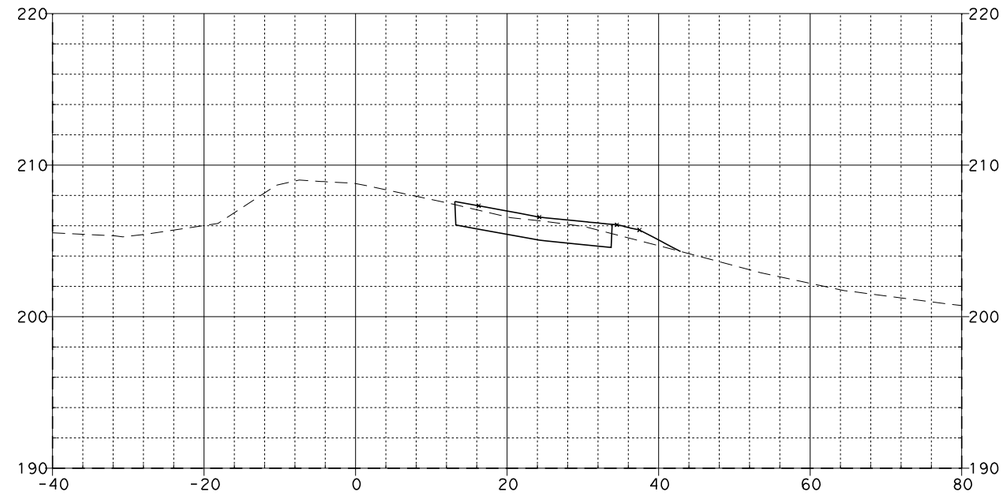

79+50.00

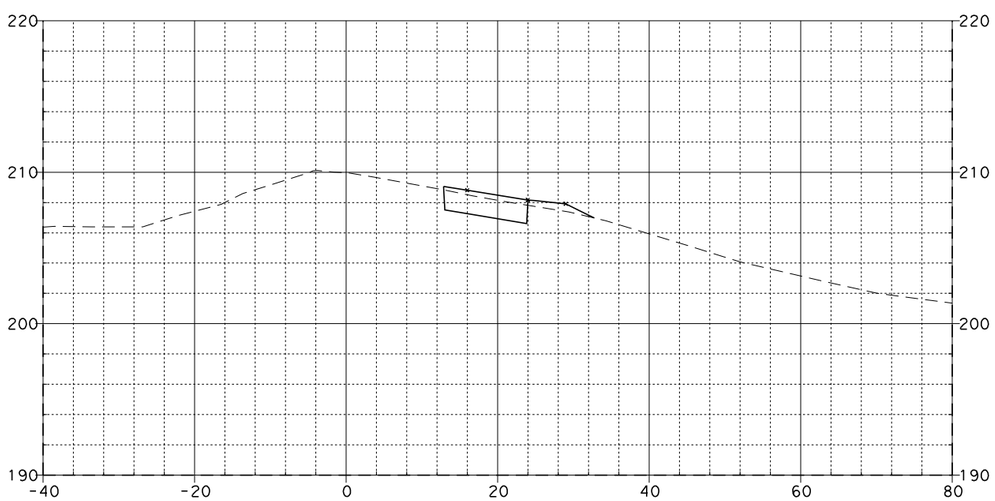

79+25.00

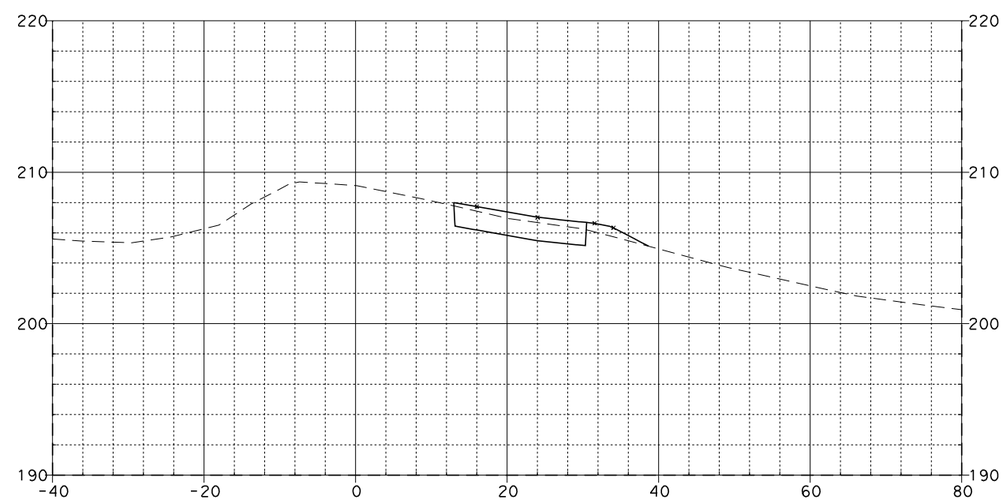

79+43.18

LINCOLN LOOP ON-RAMP "E-5"

08\03\11

Dist	COUNTY	ROUTE	POST MILES TOTAL PROJECT	SHEET NO.	TOTAL SHEETS
12	Ora	57	12.2/15.2		

FOR EARTHWORK DEVELOPMENT ONLY

...\d0282599\Cross_Sections.dgn

EA 0F0401

SCALE: Horiz 1"=20'
Vert 1"=10'

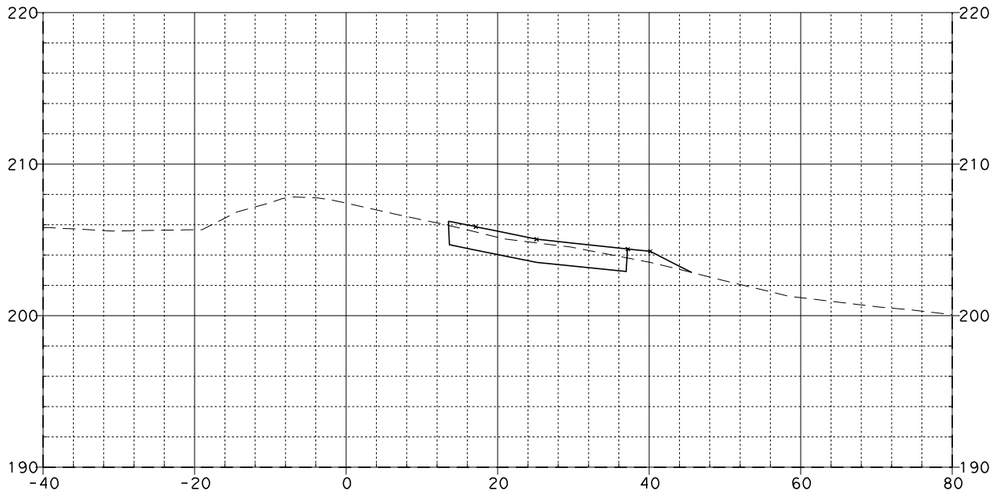

79+75.00

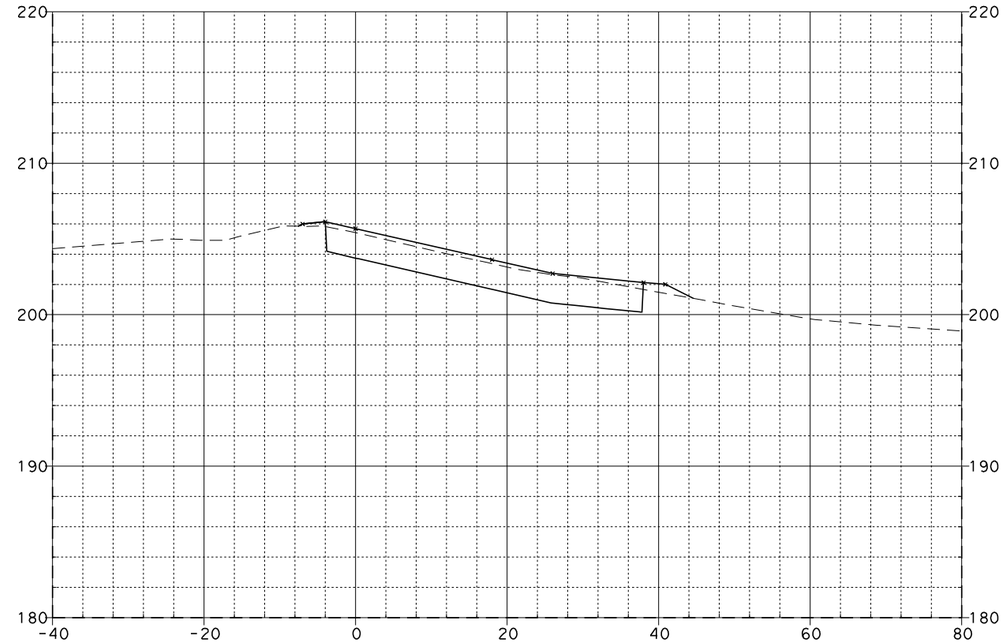

80+15.11

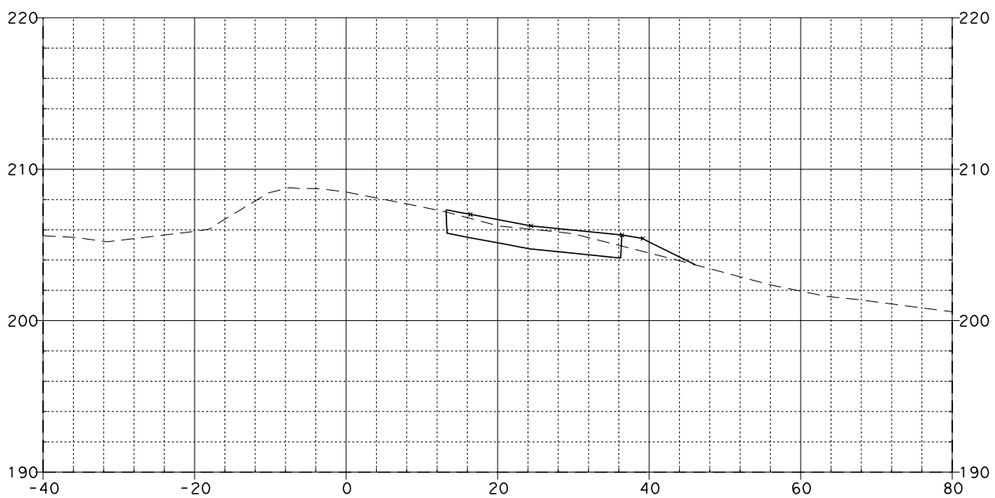

79+55.10

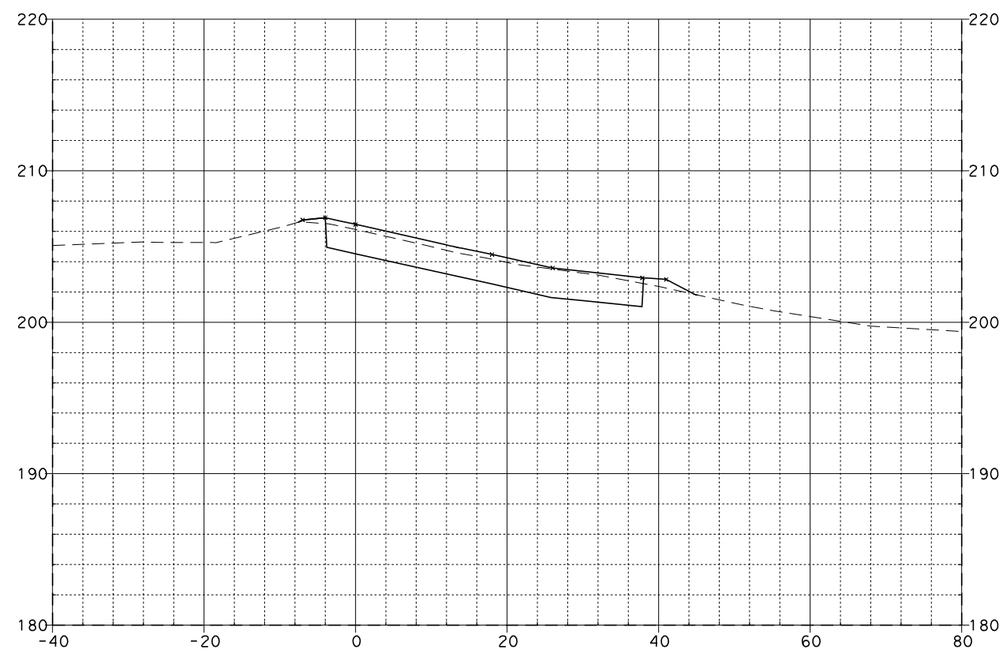

80+00.00

LINCOLN LOOP ON-RAMP "E-5"

08\03\11

Dist	COUNTY	ROUTE	POST MILES TOTAL PROJECT	SHEET No.	TOTAL SHEETS
12	Ora	57	12.2/15.2		

FOR EARTHWORK DEVELOPMENT ONLY

...\d0282599\Cross_Sections.dgn

EA 0F0401

SCALE: Horiz 1"=20'
Vert 1"=10'

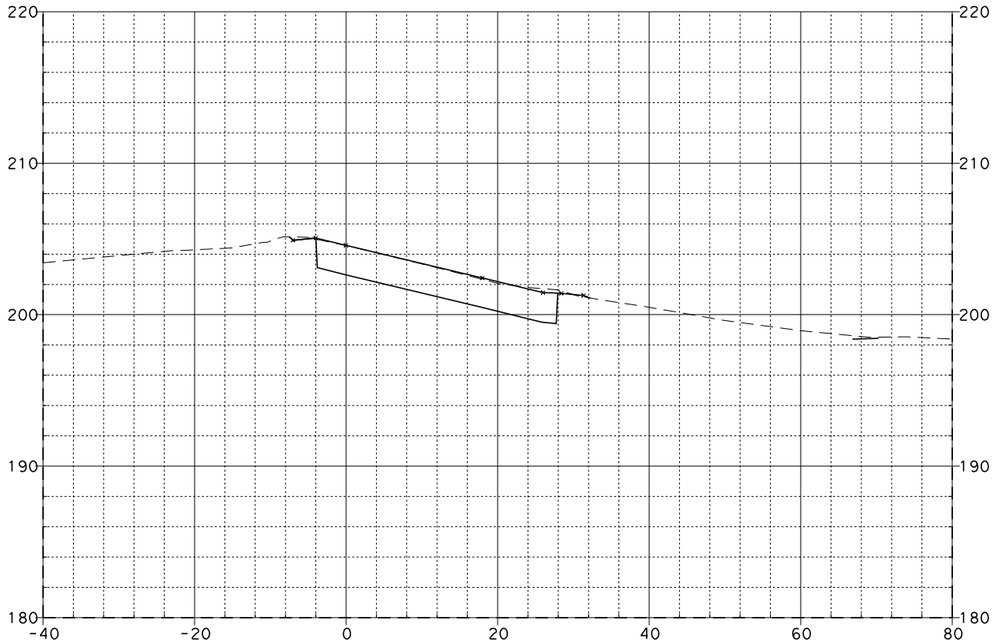

80+38.00

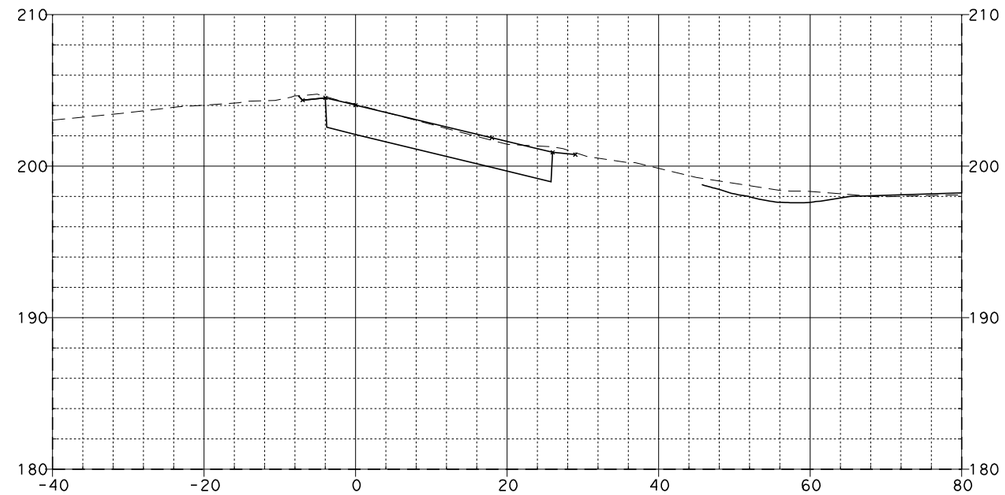

80+50.00

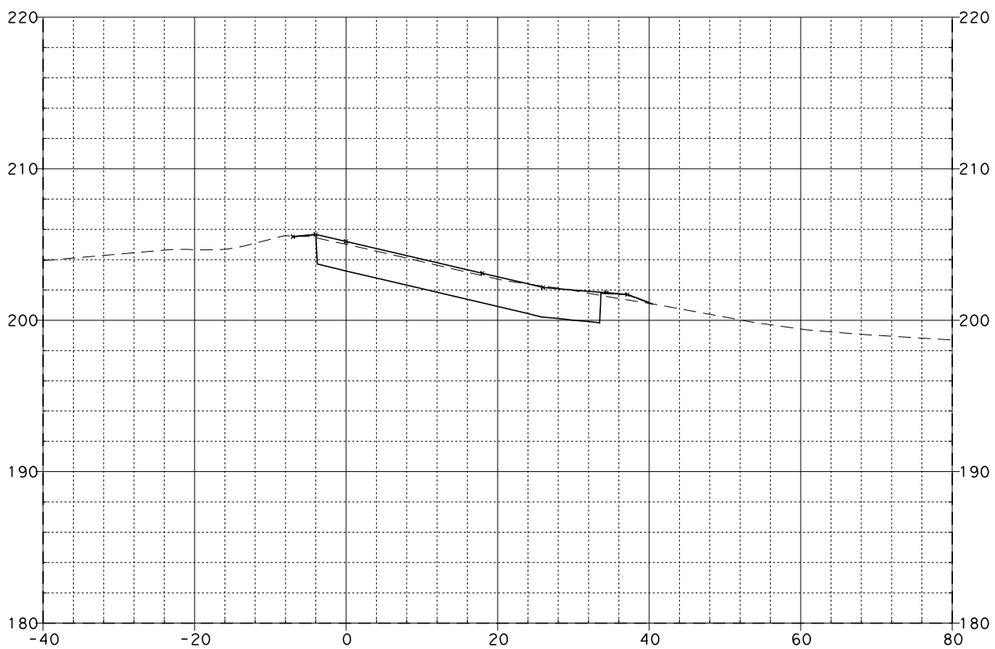

80+25.00

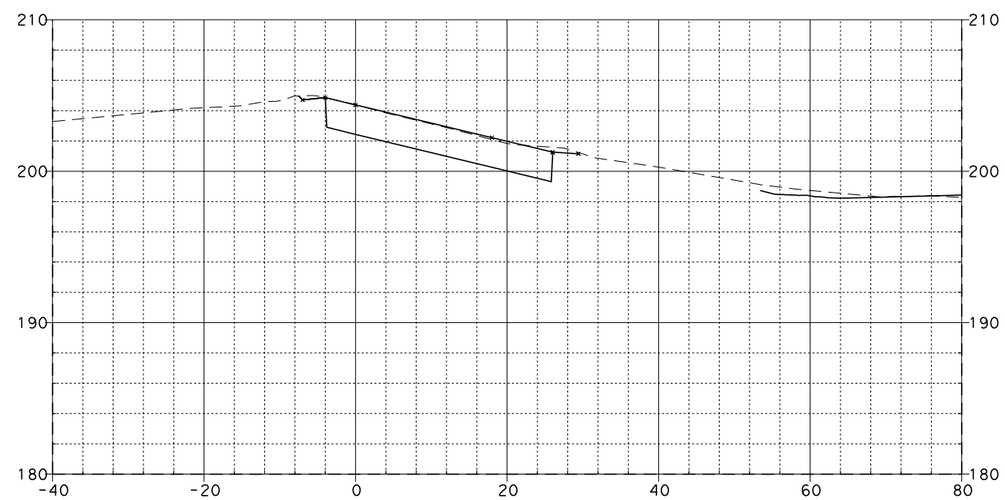

80+42.41

LINCOLN LOOP ON-RAMP "E-5"

08\03\11

Dist	COUNTY	ROUTE	POST MILES TOTAL PROJECT	SHEET No.	TOTAL SHEETS
12	Ora	57	12.2/15.2		

FOR EARTHWORK DEVELOPMENT ONLY

...\d0282599\Cross_Sections.dgn

EA 0F0401

SCALE: Horiz 1"=20'
Vert 1"=10'

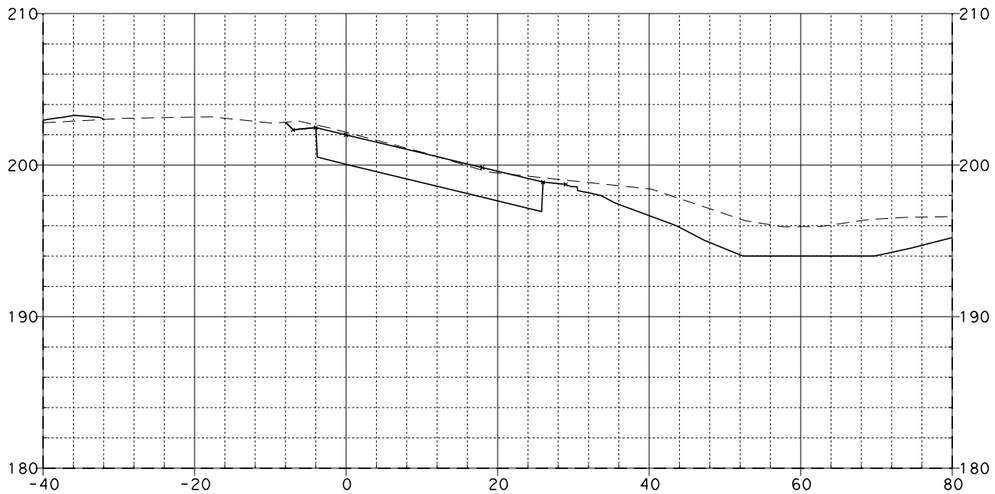

81+00.00

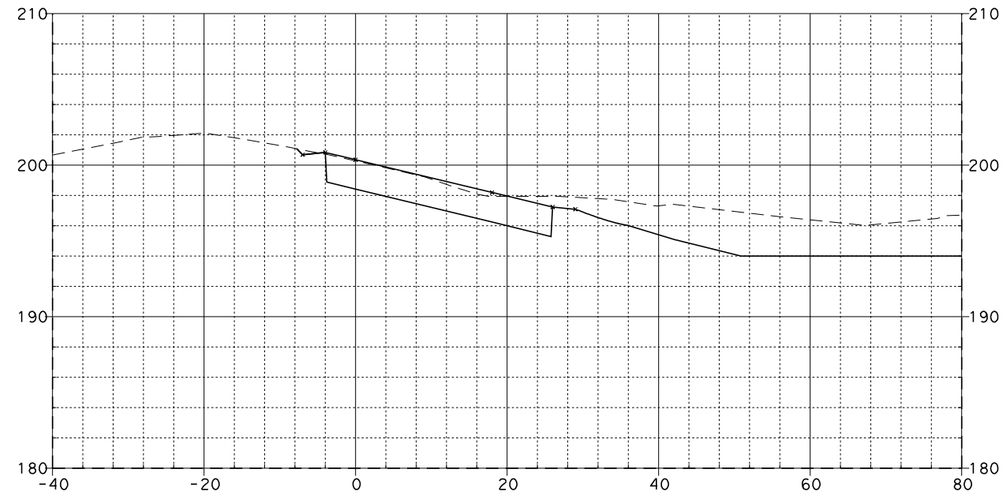

81+50.00

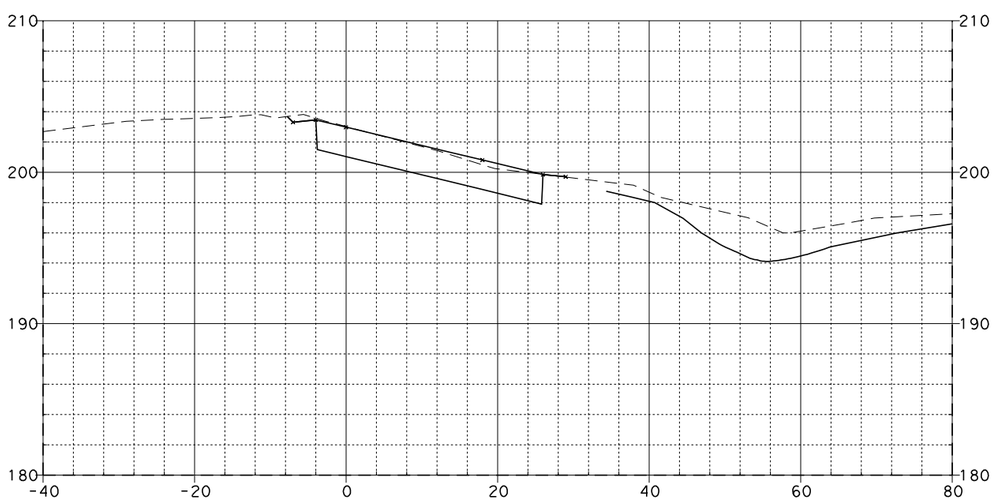

80+75.00

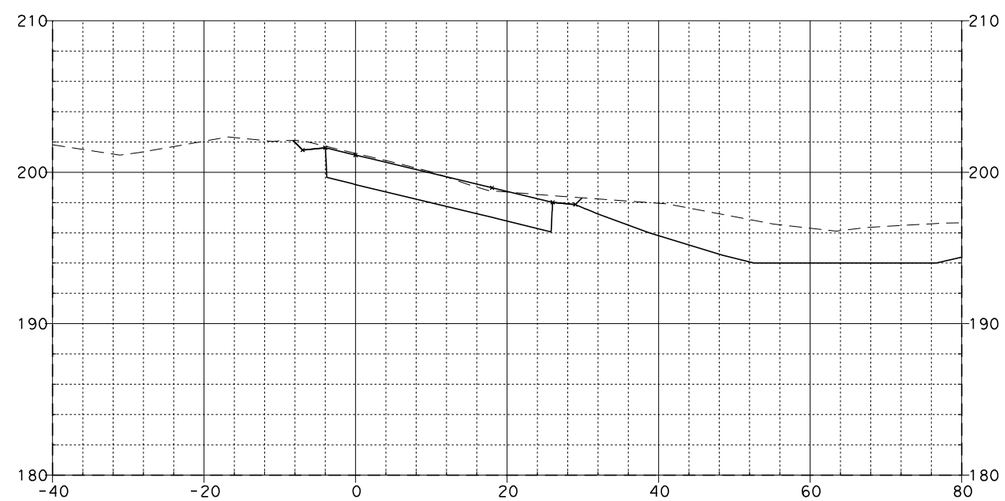

81+25.00

LINCOLN LOOP ON-RAMP "E-5"

08\03\11

Dist	COUNTY	ROUTE	POST MILES TOTAL PROJECT	SHEET NO.	TOTAL SHEETS
12	Ora	57	12.2/15.2		

FOR EARTHWORK DEVELOPMENT ONLY

...\d0282599\Cross_Sections.dgn

EA 0F0401

SCALE: Horiz 1"=20'
Vert 1"=10'

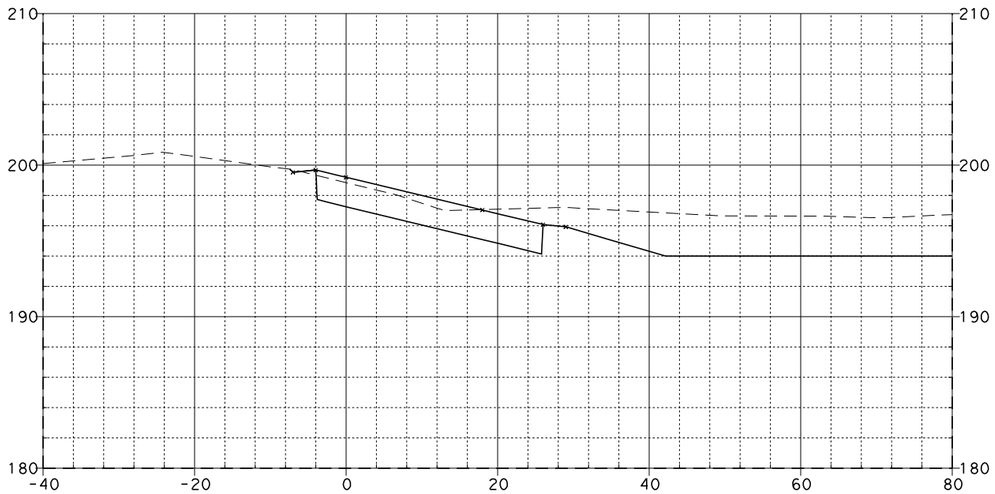

81+96.00

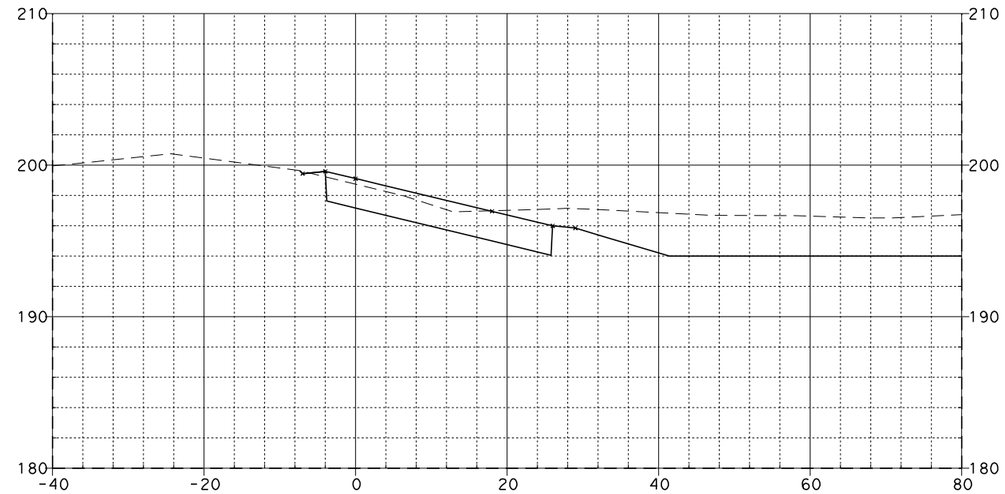

82+00.00

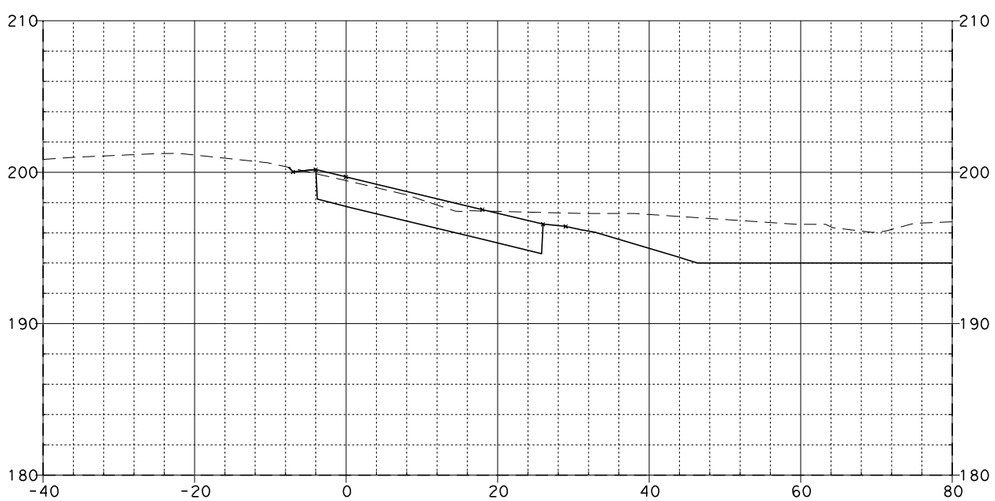

81+75.00

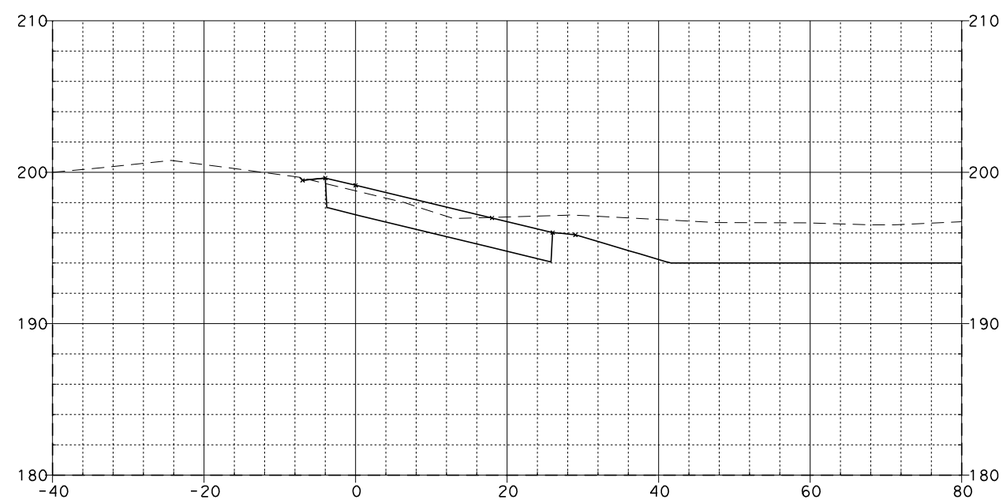

81+99.00

LINCOLN LOOP ON-RAMP "E-5"

08\03\11

Dist	COUNTY	ROUTE	POST MILES TOTAL PROJECT	SHEET NO.	TOTAL SHEETS
12	Ora	57	12.2/15.2		

FOR EARTHWORK DEVELOPMENT ONLY

...\d0282599\Cross_Sections.dgn

EA 0F0401

SCALE: Horiz 1"=20'
Vert 1"=10'

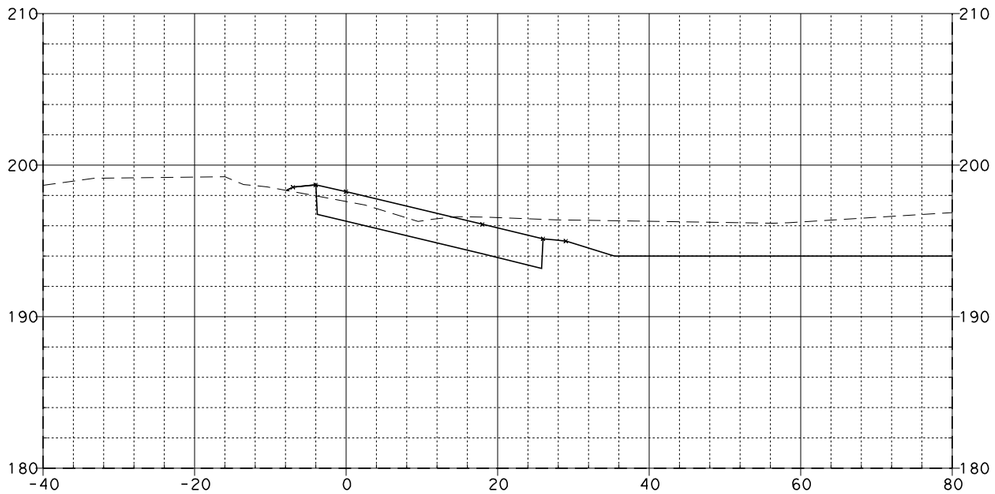

82+50.00

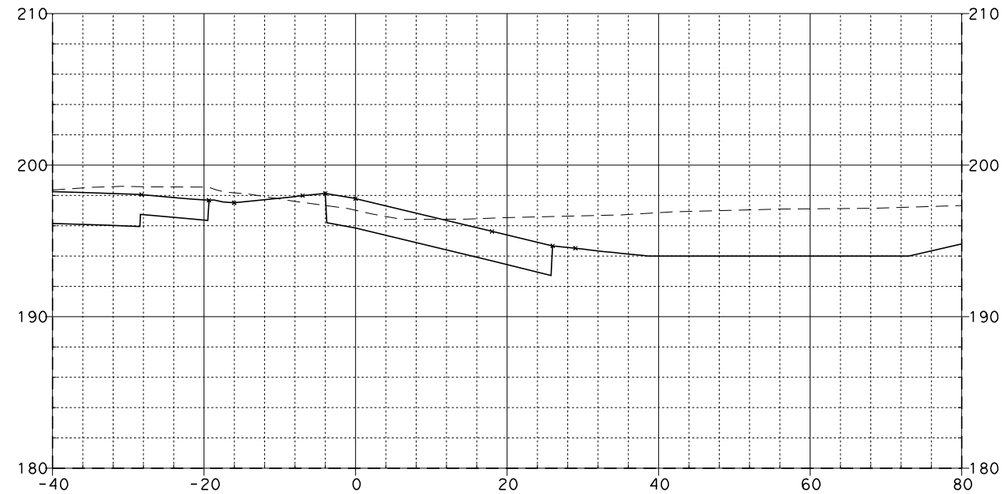

83+00.00

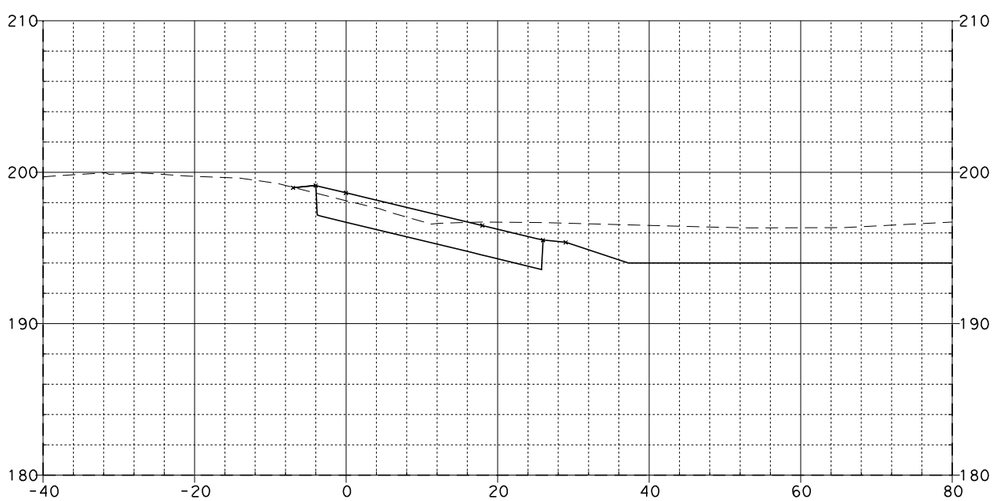

82+25.00

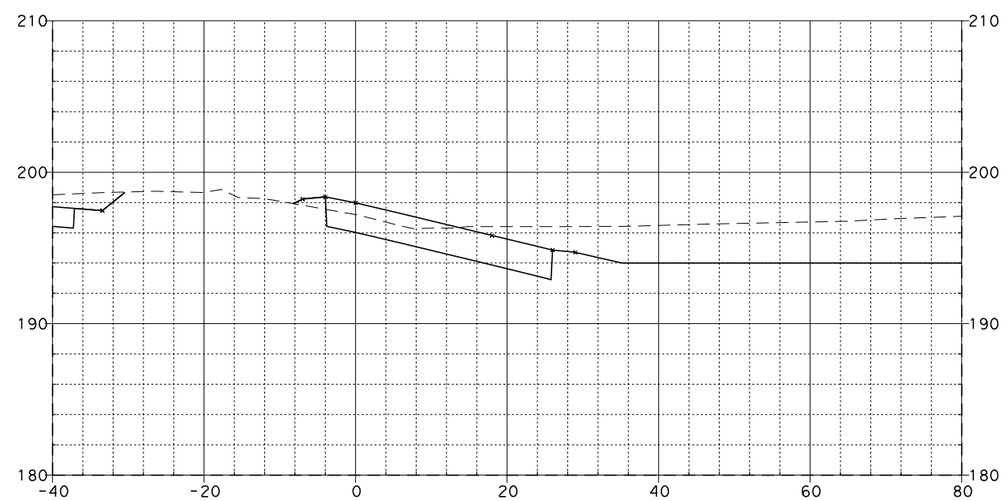

82+75.00

LINCOLN LOOP ON-RAMP "E-5"

08\03\11

Dist	COUNTY	ROUTE	POST MILES TOTAL PROJECT	SHEET NO.	TOTAL SHEETS
12	Ora	57	12.2/15.2		

FOR EARTHWORK DEVELOPMENT ONLY

...\d0282599\Cross_Sections.dgn

EA 0F0401

SCALE: Horiz 1"=20'
Vert 1"=10'

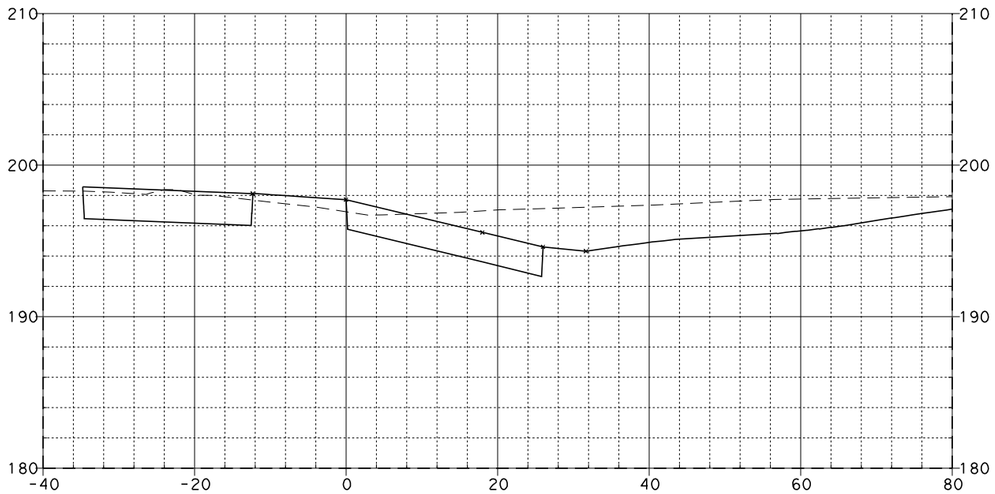

83+50.00

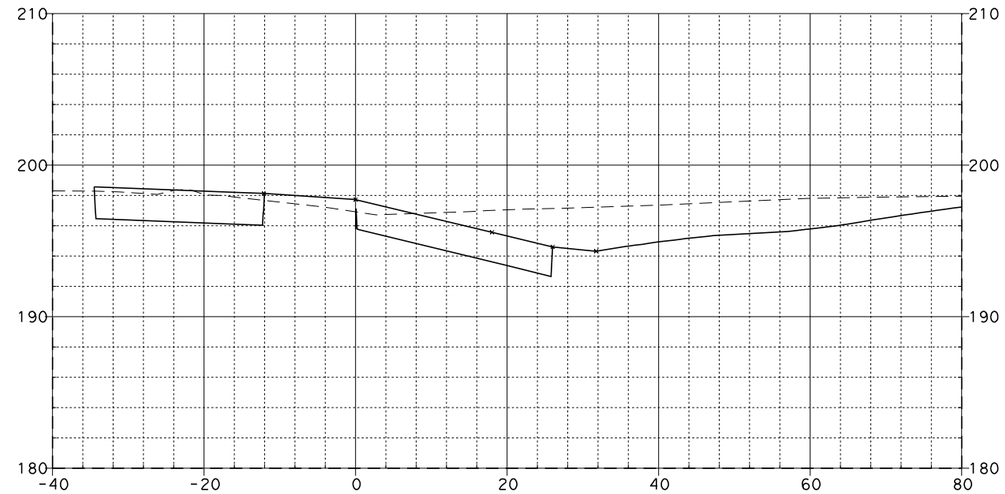

83+52.57

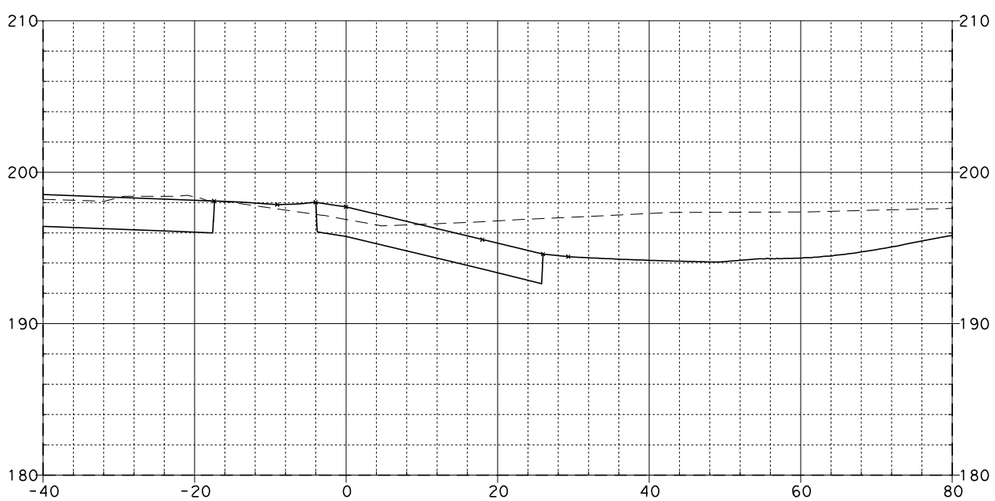

83+25.00

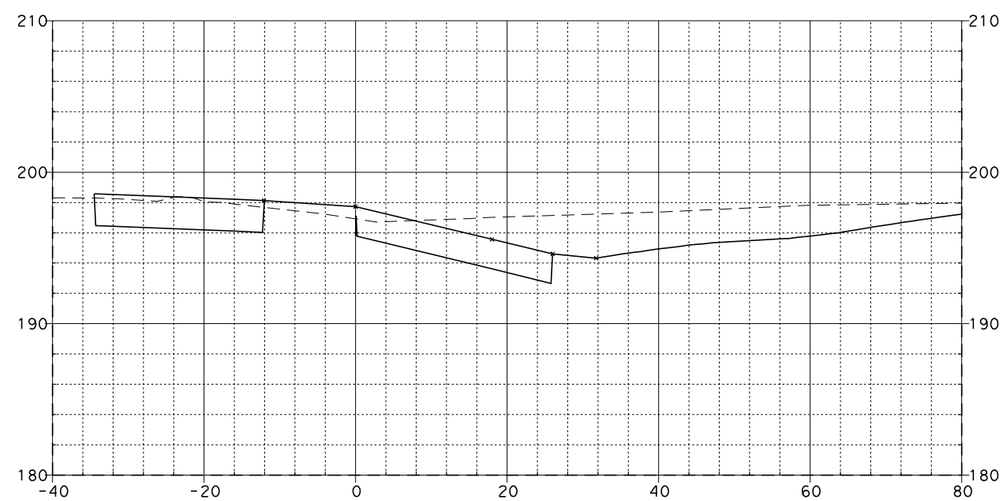

83+52.50

LINCOLN LOOP ON-RAMP "E-5"

08\03\11

Dist	COUNTY	ROUTE	POST MILES TOTAL PROJECT	SHEET NO.	TOTAL SHEETS
12	Ora	57	12.2/15.2		

FOR EARTHWORK DEVELOPMENT ONLY

...\d0282599\Cross_Sections.dgn

EA 0F0401

SCALE: Horiz 1"=20'
Vert 1"=10'

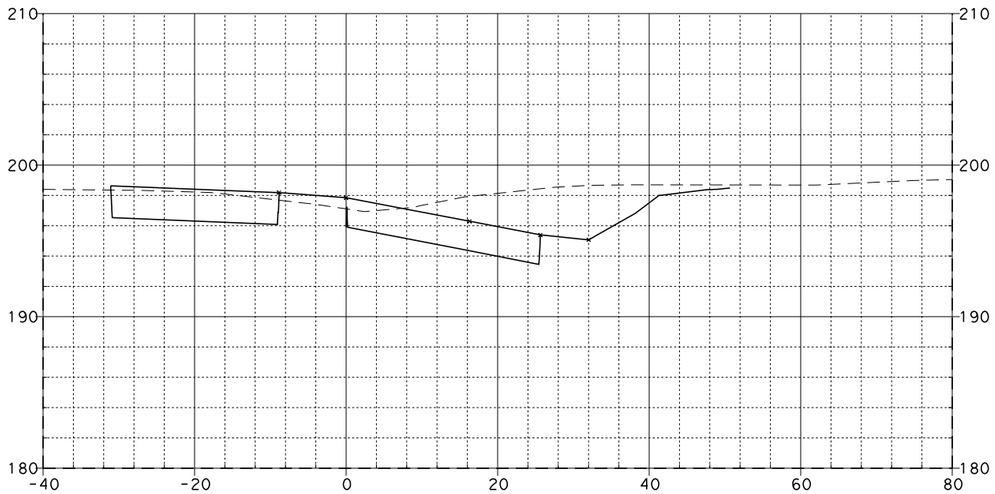

84+00.00

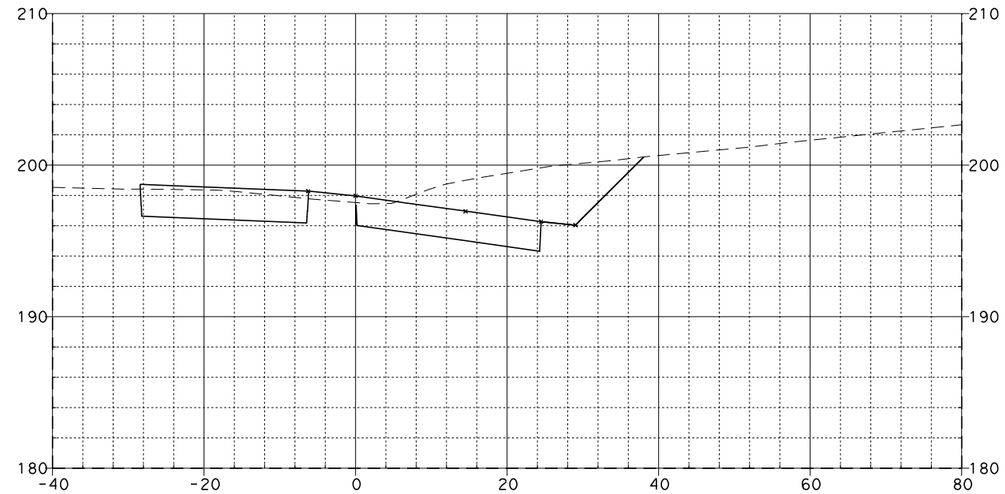

84+50.00

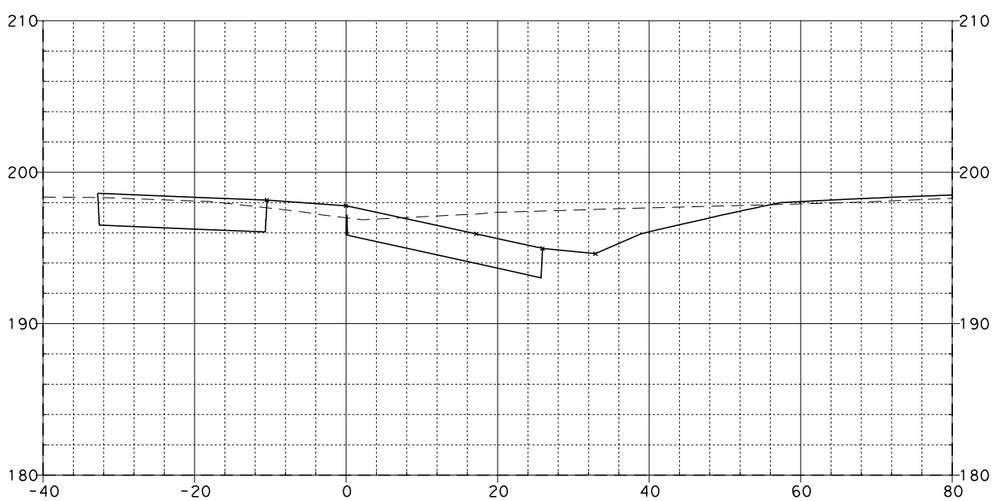

83+75.00

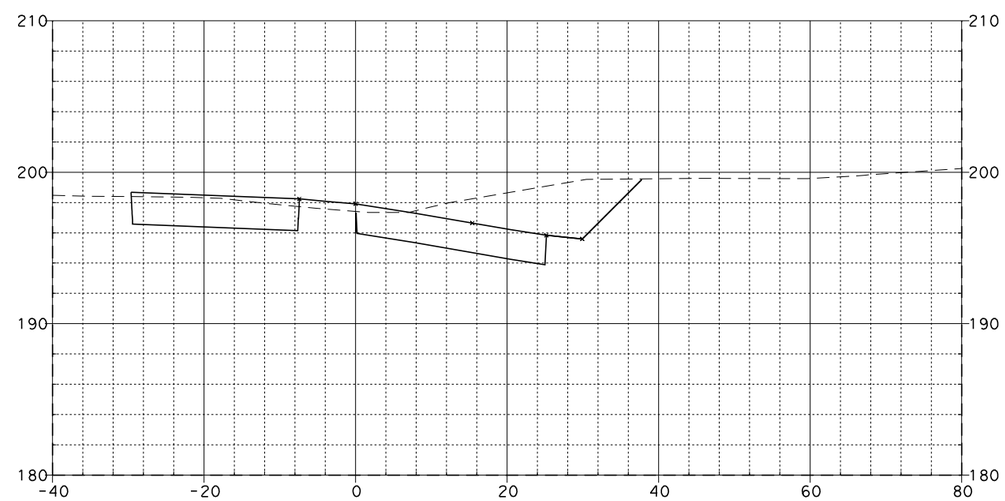

84+25.00

LINCOLN LOOP ON-RAMP "E-5"

08\03\11

Dist	COUNTY	ROUTE	POST MILES TOTAL PROJECT	SHEET NO.	TOTAL SHEETS
12	Ora	57	12.2/15.2		

FOR EARTHWORK DEVELOPMENT ONLY

...\d0282599\Cross_Sections.dgn

EA 0F0401

SCALE: Horiz 1"=20'
Vert 1"=10'

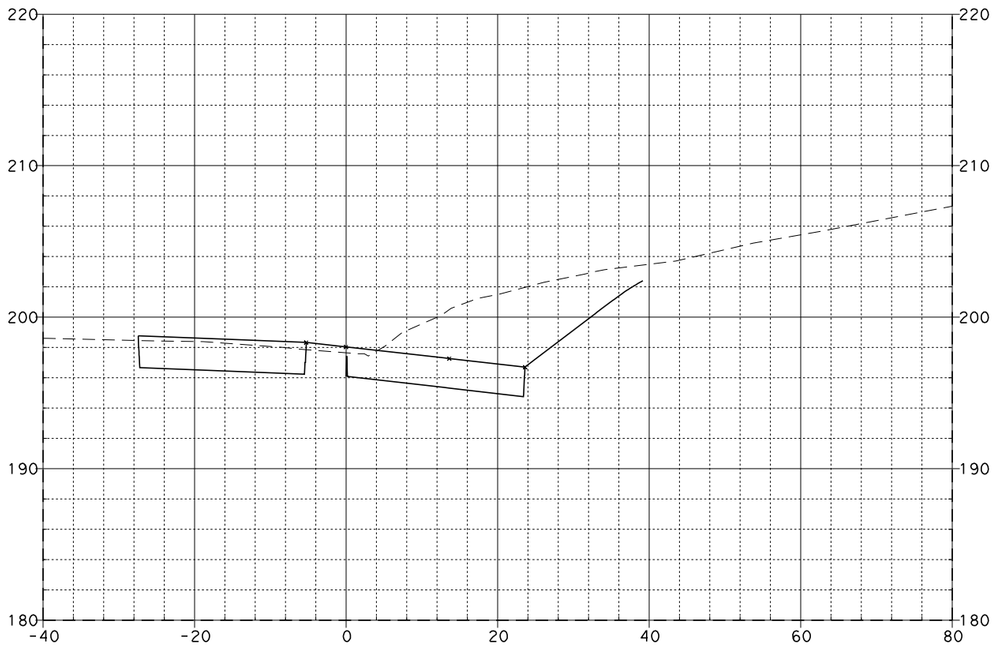

84+75.00

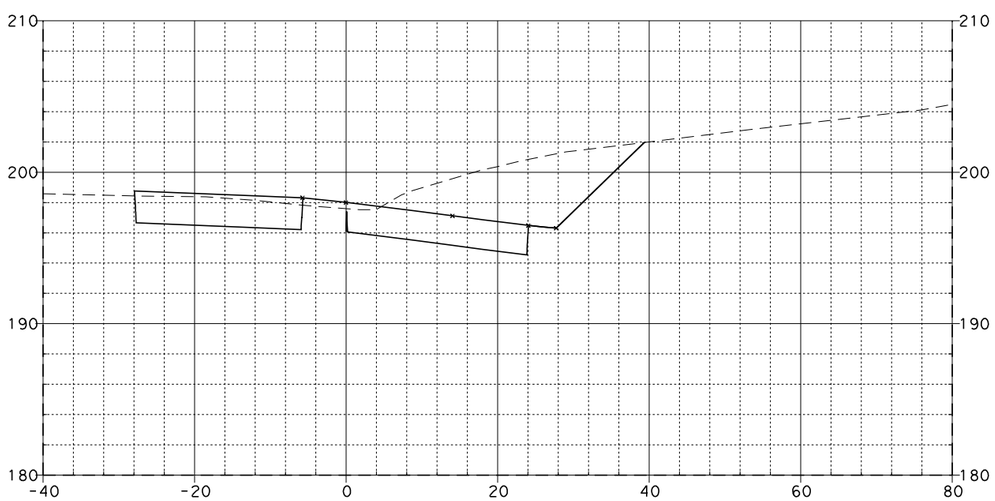

84+62.62

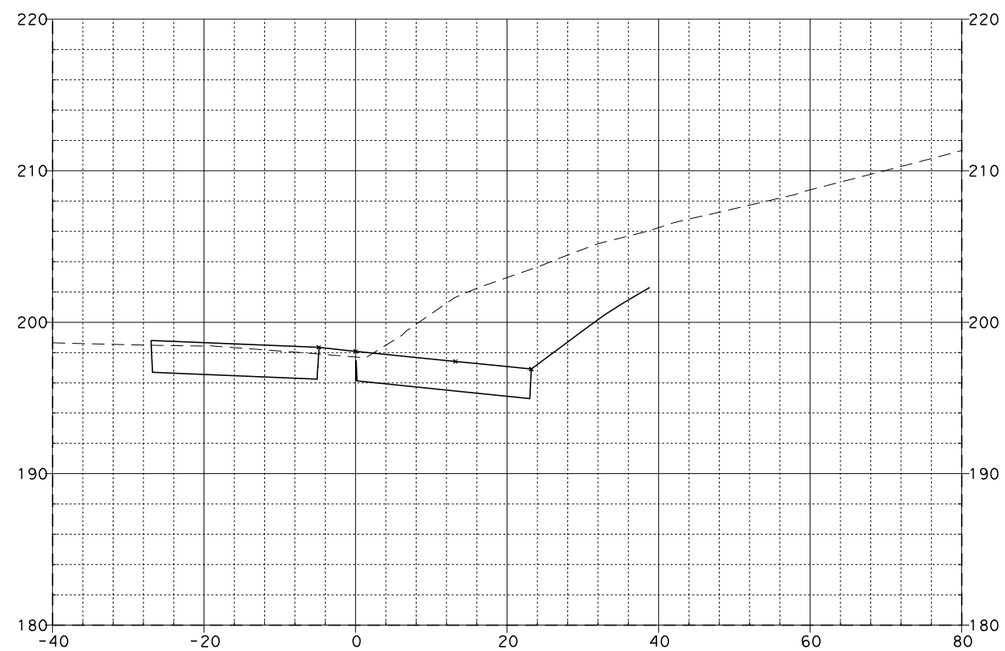

84+87.21

LINCOLN LOOP ON-RAMP "E-5"

08\03\11

Dist	COUNTY	ROUTE	POST MILES TOTAL PROJECT	SHEET No.	TOTAL SHEETS
12	Ora	57	12.2/15.2		

FOR EARTHWORK DEVELOPMENT ONLY

...\d0282599\Cross_Sections.dgn

EA 0F0401

SCALE: Horiz 1"=20'
Vert 1"=10'

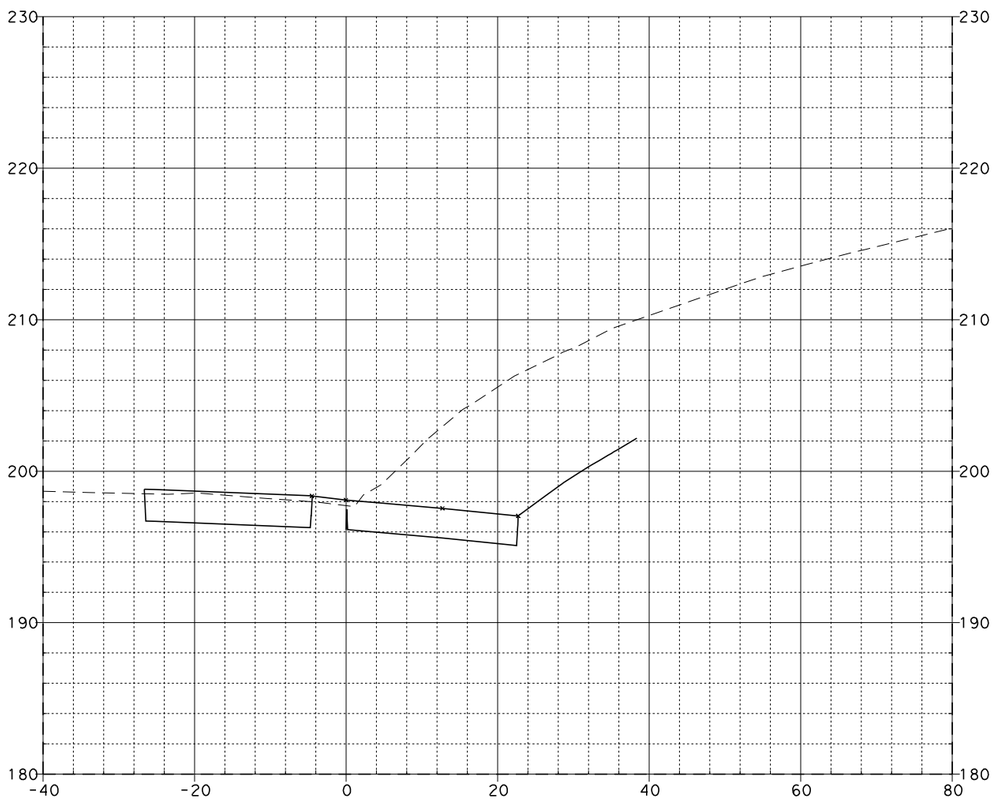

85+00.00

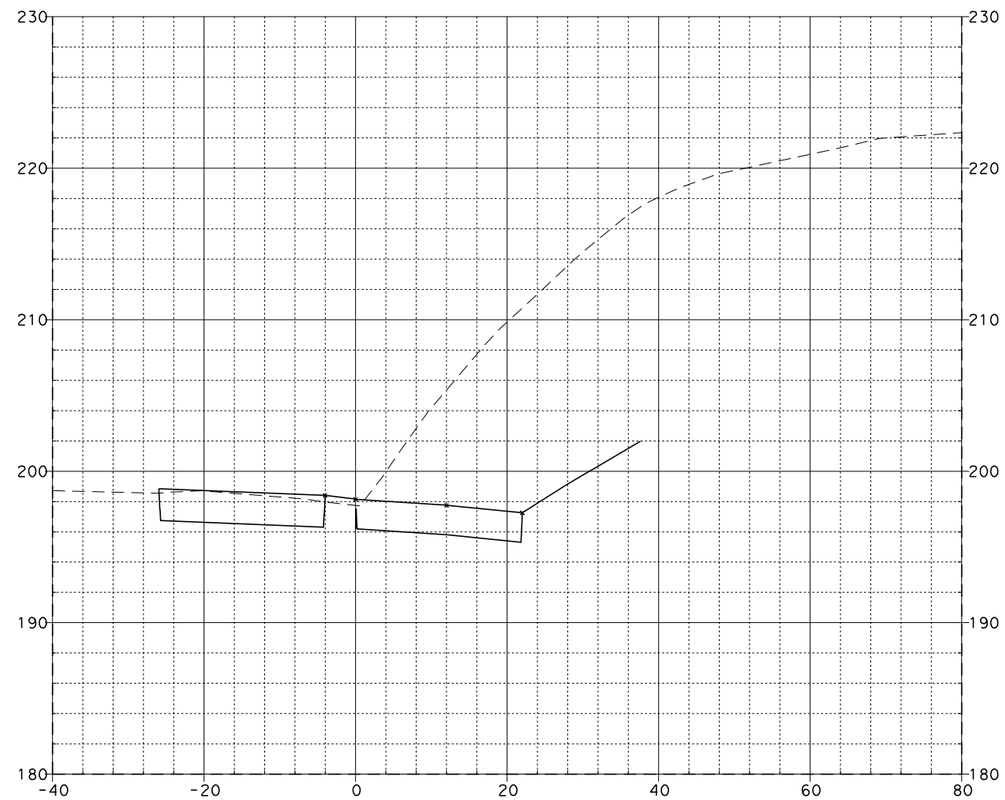

85+19.94

LINCOLN LOOP ON-RAMP "E-5"

08\03\11

Dist	COUNTY	ROUTE	POST MILES TOTAL PROJECT	SHEET No.	TOTAL SHEETS
12	Ora	57	12.2/15.2		

FOR EARTHWORK DEVELOPMENT ONLY

...\d0282599\Cross_Sections.dgn

EA 0F0401

SCALE: Horiz 1"=20'
Vert 1"=10'

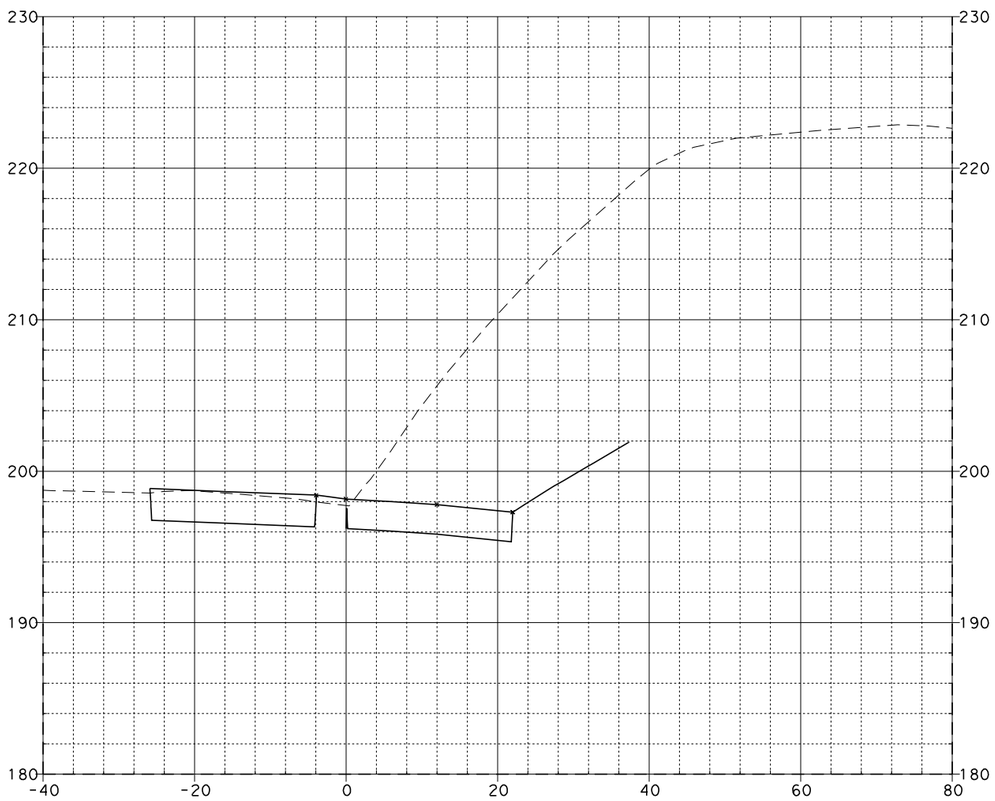

85+25.00

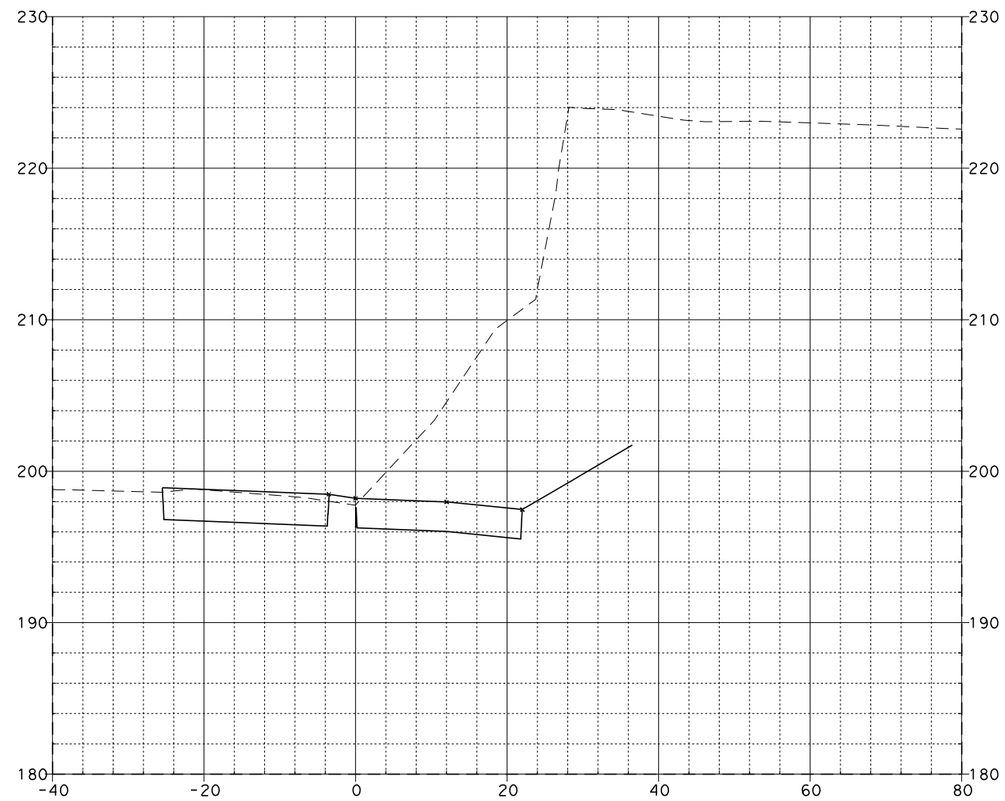

85+44.94

LINCOLN LOOP ON-RAMP "E-5"

08\03\11

Dist	COUNTY	ROUTE	POST MILES TOTAL PROJECT	SHEET NO.	TOTAL SHEETS
12	Ora	57	12.2/15.2		

FOR EARTHWORK DEVELOPMENT ONLY

...\d0282599\Cross_Sections.dgn

EA 0F0401

SCALE: Horiz 1"=20'
Vert 1"=10'

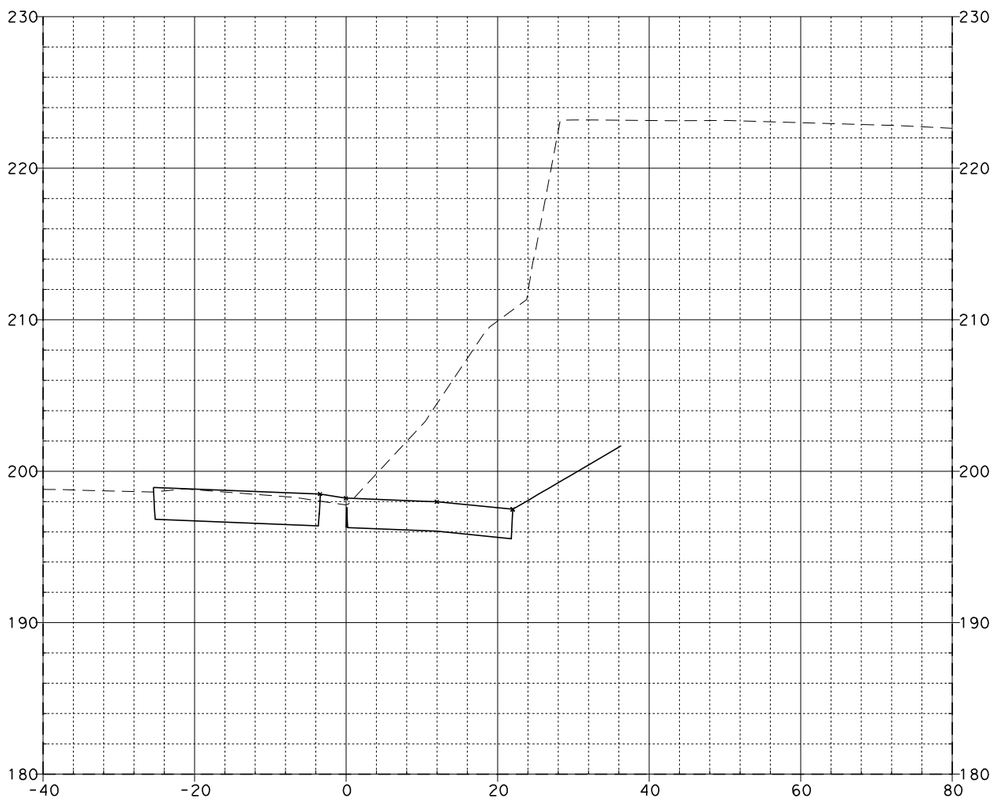

85+50.00

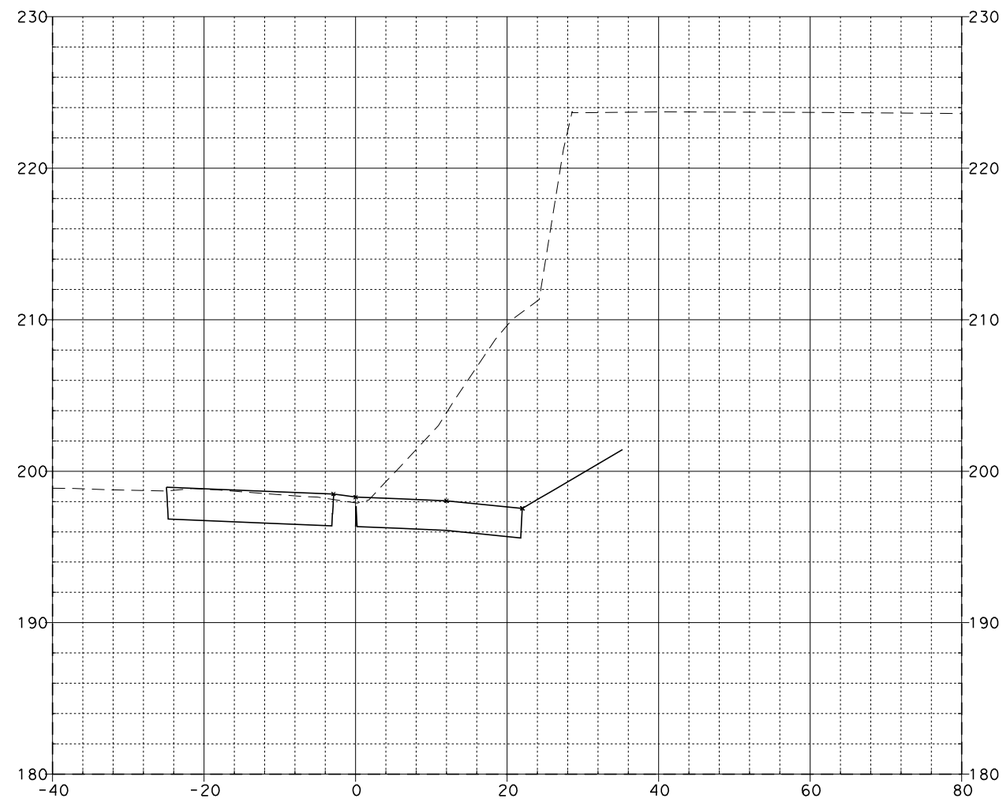

85+75.00

LINCOLN LOOP ON-RAMP "E-5"

08\03\11

Dist	COUNTY	ROUTE	POST MILES TOTAL PROJECT	SHEET No.	TOTAL SHEETS
12	Ora	57	12.2/15.2		

FOR EARTHWORK DEVELOPMENT ONLY

...\d0282599\Cross_Sections.dgn

EA 0F0401

SCALE: Horiz 1"=20'
Vert 1"=10'

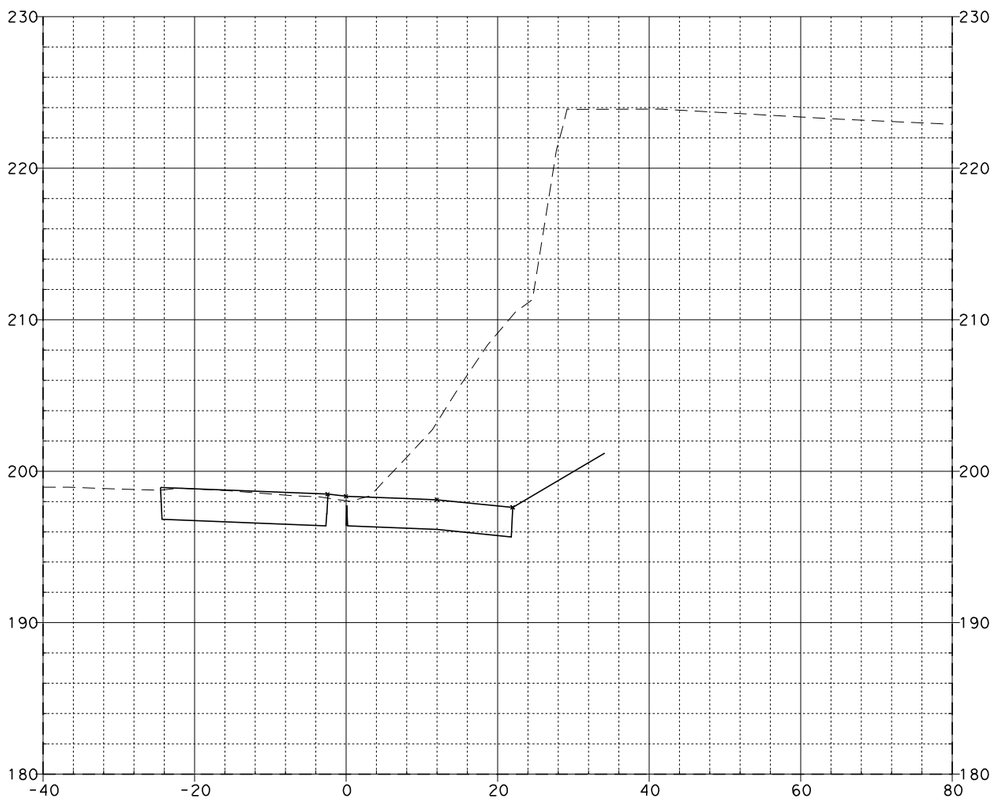

86+00.00

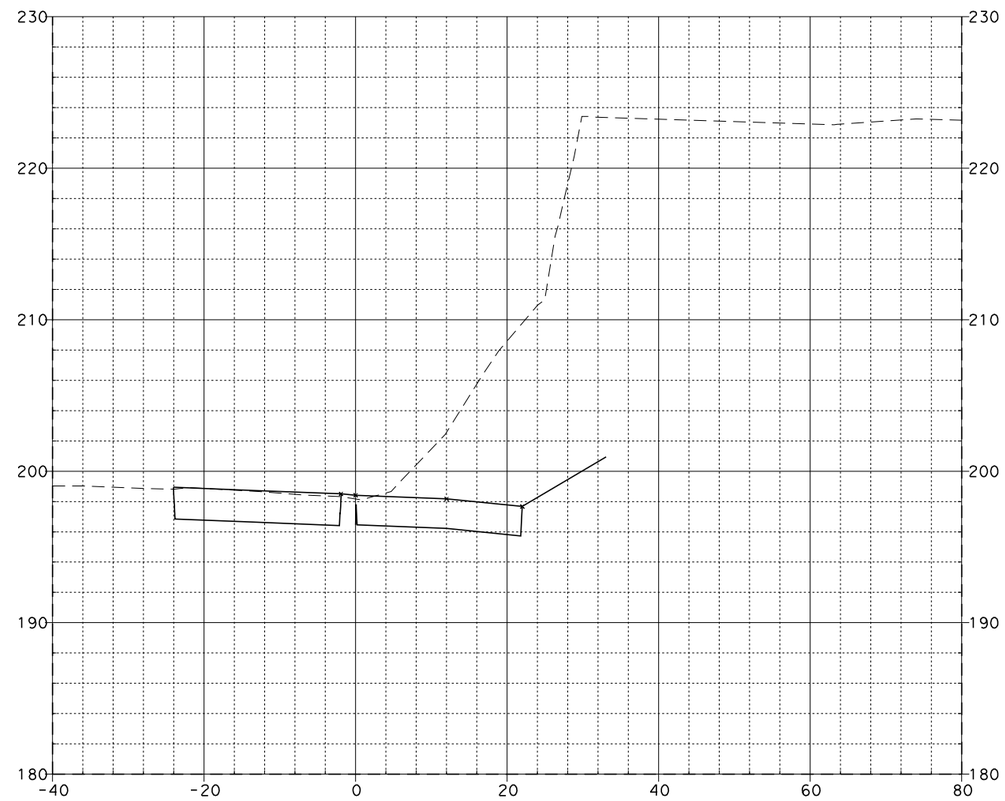

86+25.00

LINCOLN LOOP ON-RAMP "E-5"

08\03\11

Dist	COUNTY	ROUTE	POST MILES TOTAL PROJECT	SHEET NO.	TOTAL SHEETS
12	Ora	57	12.2/15.2		

FOR EARTHWORK DEVELOPMENT ONLY

...\d0282599\Cross_Sections.dgn

EA 0F0401

SCALE: Horiz 1"=20'
Vert 1"=10'

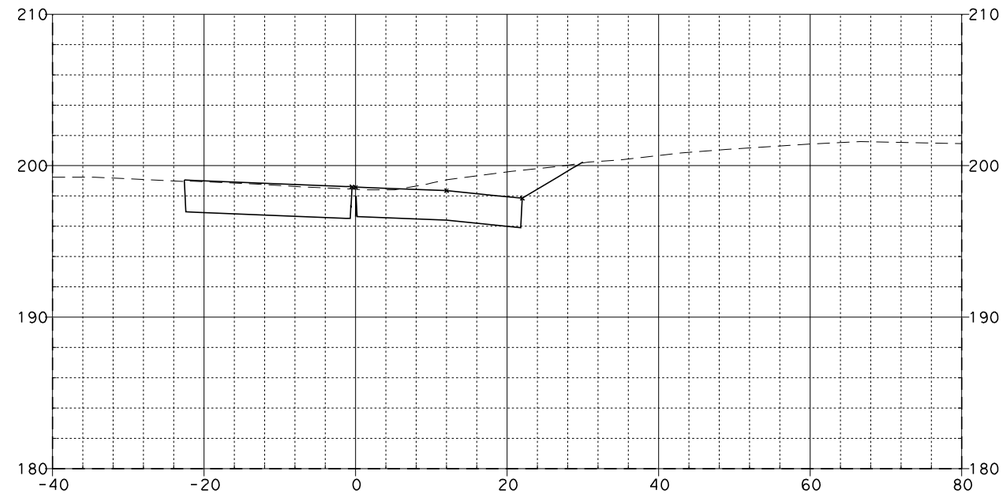

86+96.37

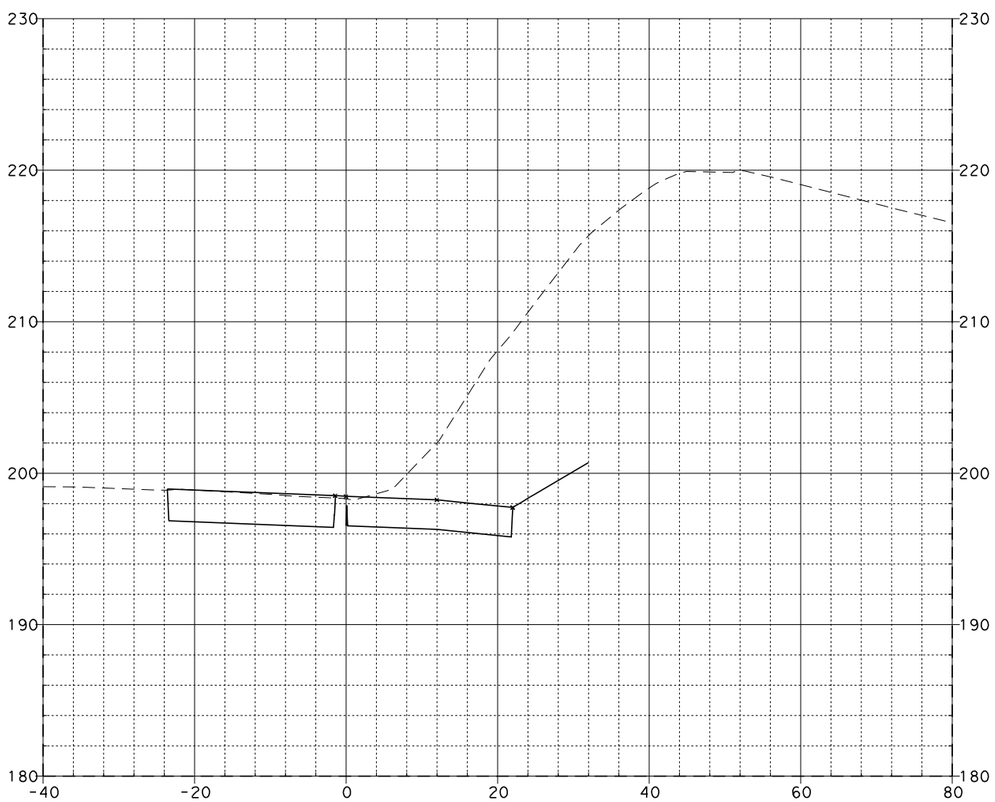

86+50.00

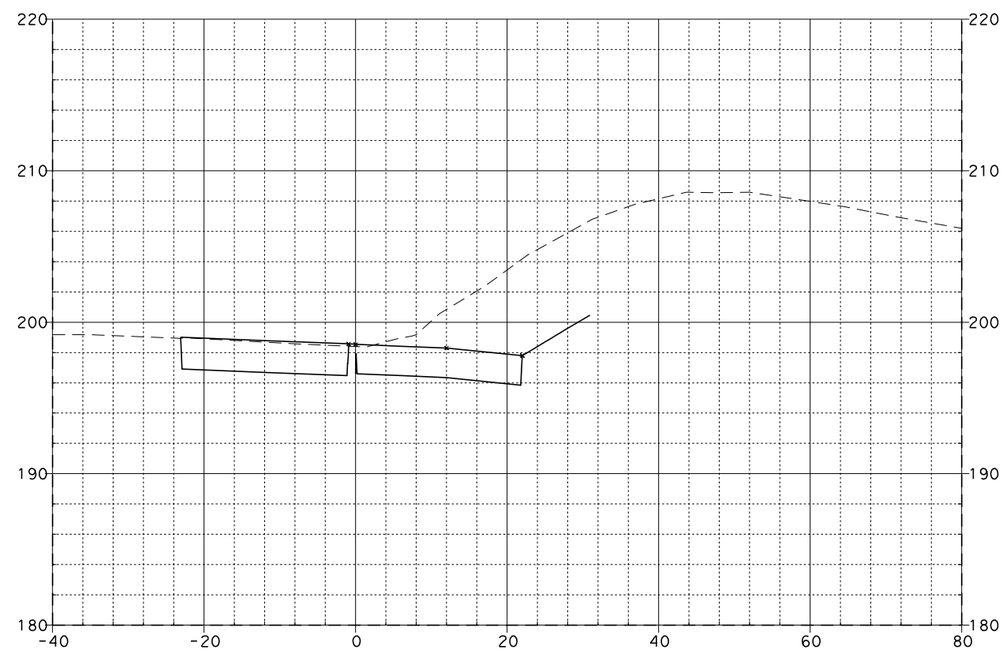

86+75.00

LINCOLN LOOP ON-RAMP "E-5"

08\03\11

Dist	COUNTY	ROUTE	POST MILES TOTAL PROJECT	SHEET No.	TOTAL SHEETS
12	Ora	57	12.2/15.2		

FOR EARTHWORK DEVELOPMENT ONLY

...\d0282599\Cross_Sections.dgn

EA 0F0401

SCALE: Horiz 1"=20'
Vert 1"=10'

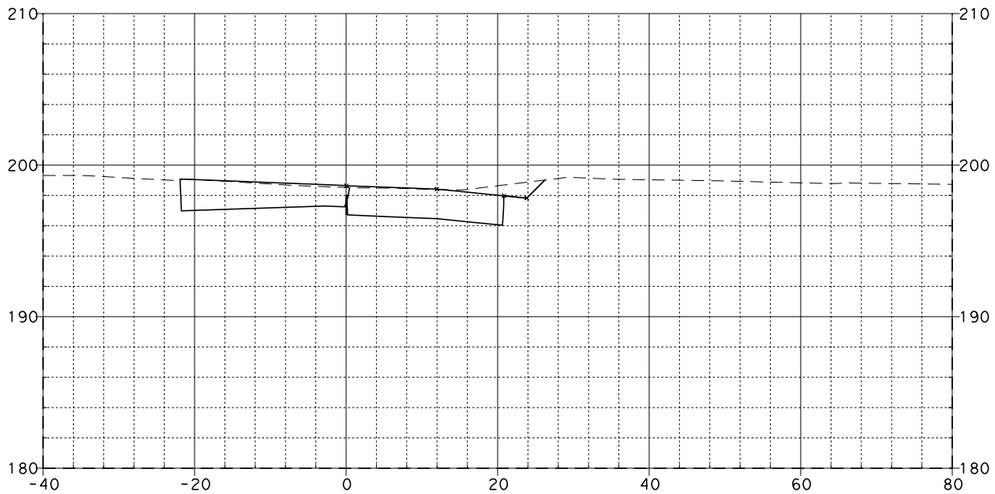

87+25.00

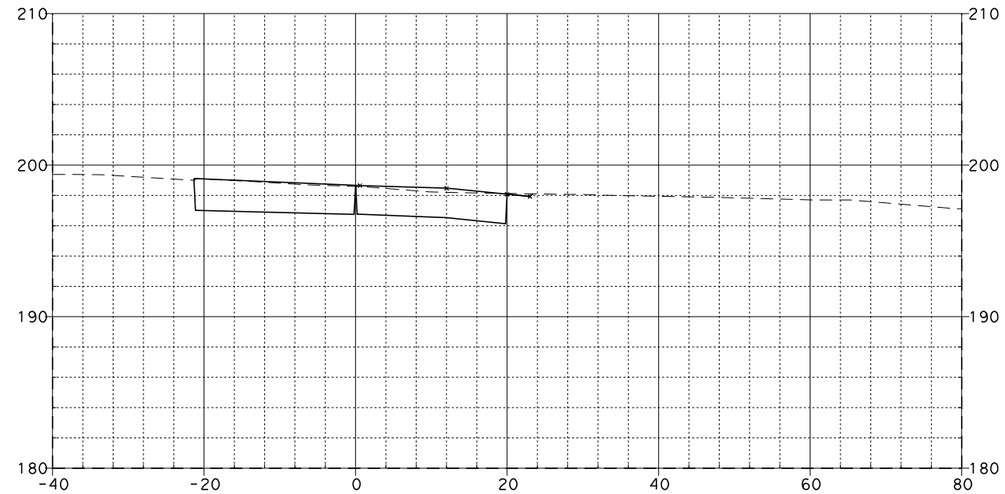

87+50.00

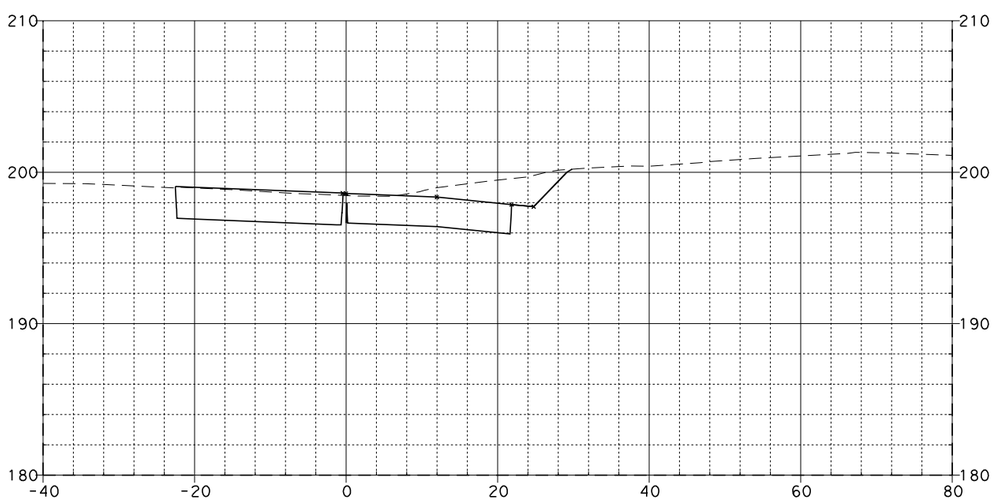

87+00.00

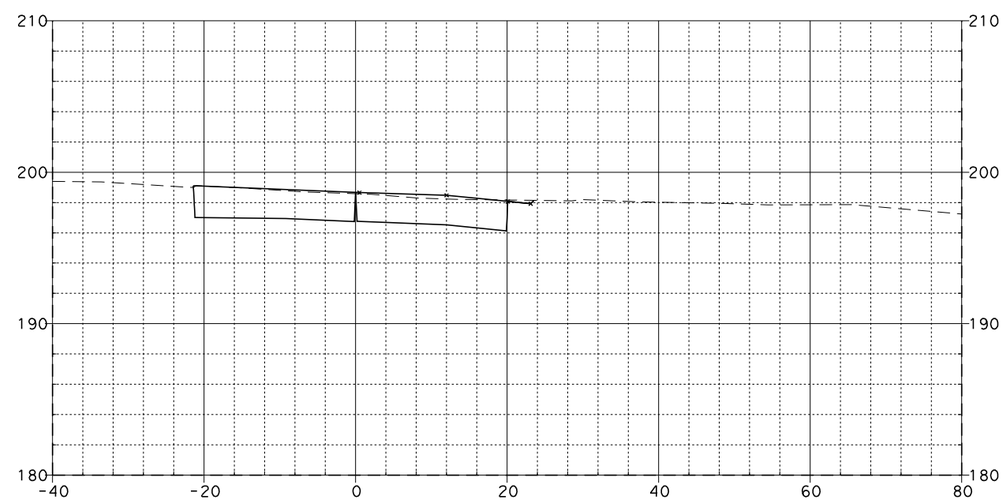

87+46.37

LINCOLN LOOP ON-RAMP "E-5"

08\03\11

Dist	COUNTY	ROUTE	POST MILES TOTAL PROJECT	SHEET NO.	TOTAL SHEETS
12	Ora	57	12.2/15.2		

FOR EARTHWORK DEVELOPMENT ONLY

...\d0282599\Cross_Sections.dgn

EA 0F0401

SCALE: Horiz 1"=20'
Vert 1"=10'

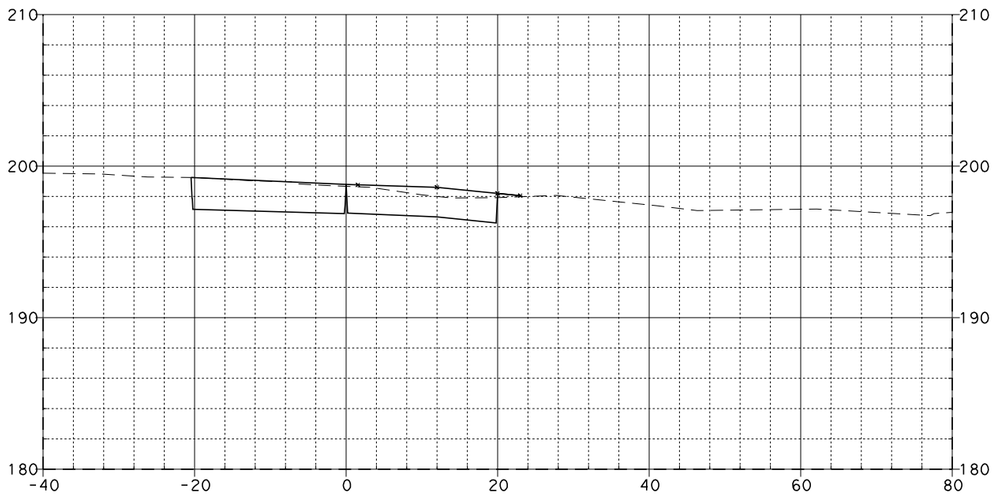

88+00.00

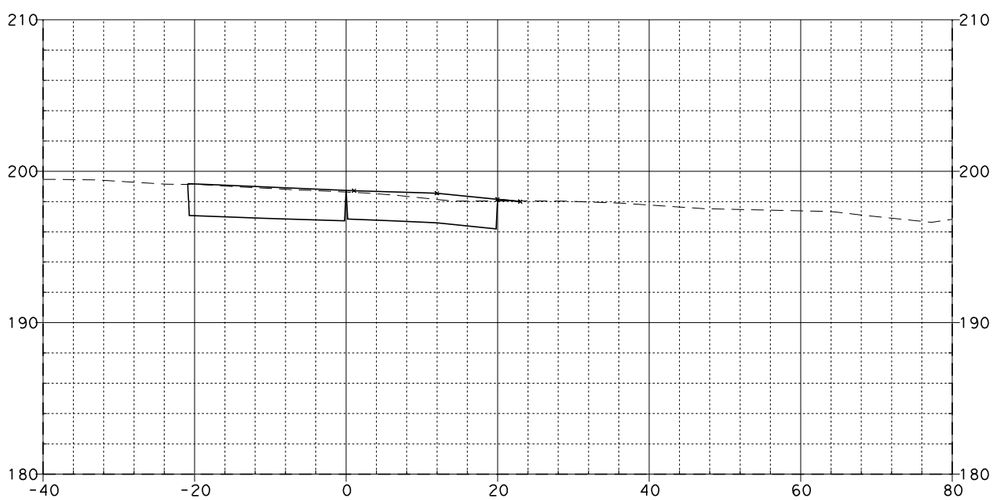

87+75.00

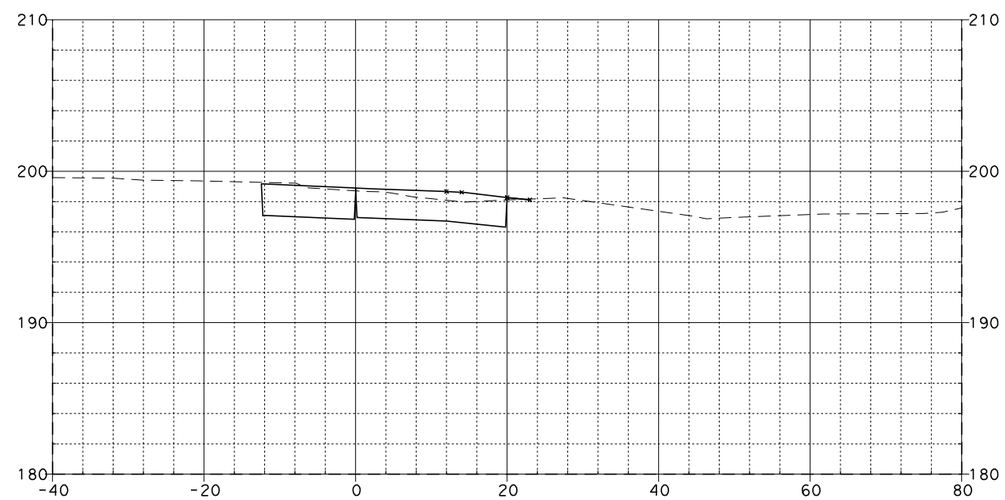

88+20.00

LINCOLN LOOP ON-RAMP "E-5"

08\03\11

Dist	COUNTY	ROUTE	POST MILES TOTAL PROJECT	SHEET NO.	TOTAL SHEETS
12	Ora	57	12.2/15.2		

FOR EARTHWORK DEVELOPMENT ONLY

...\d0282599\Cross_Sections.dgn

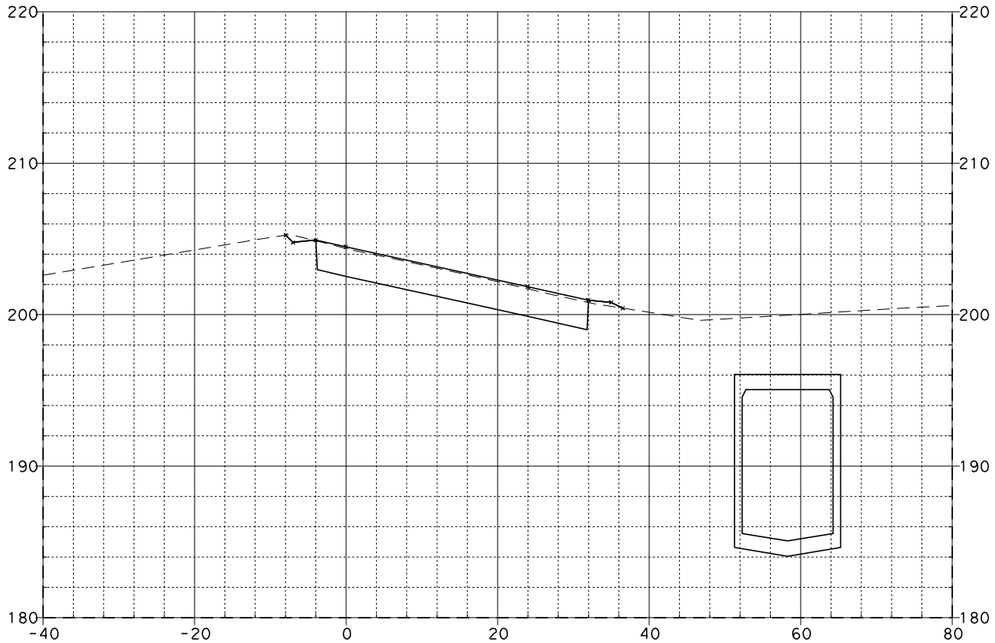

86+00.00

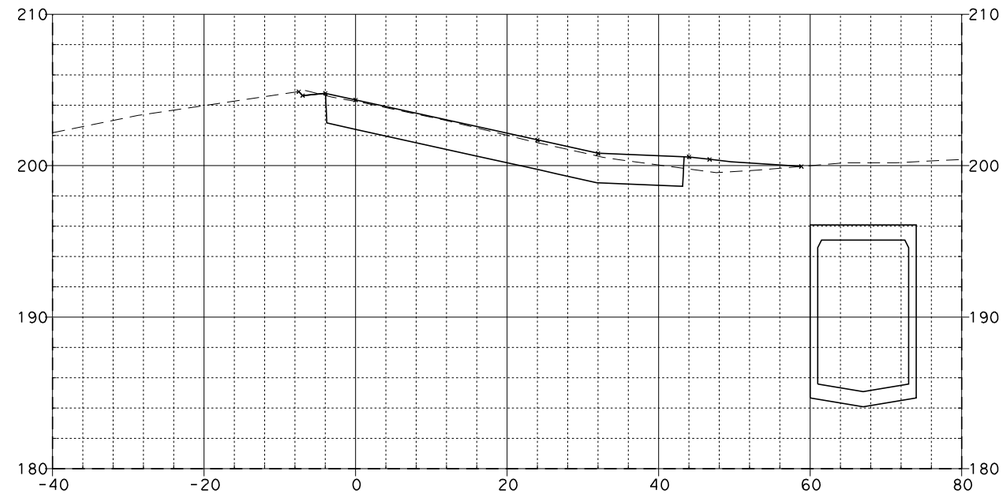

86+24.45

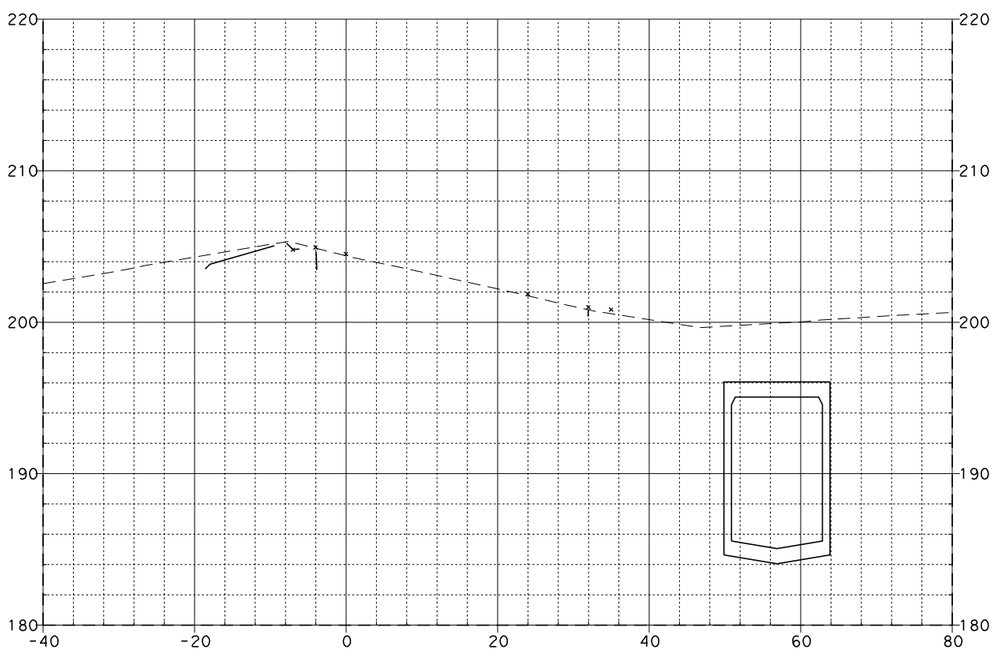

85+96.98

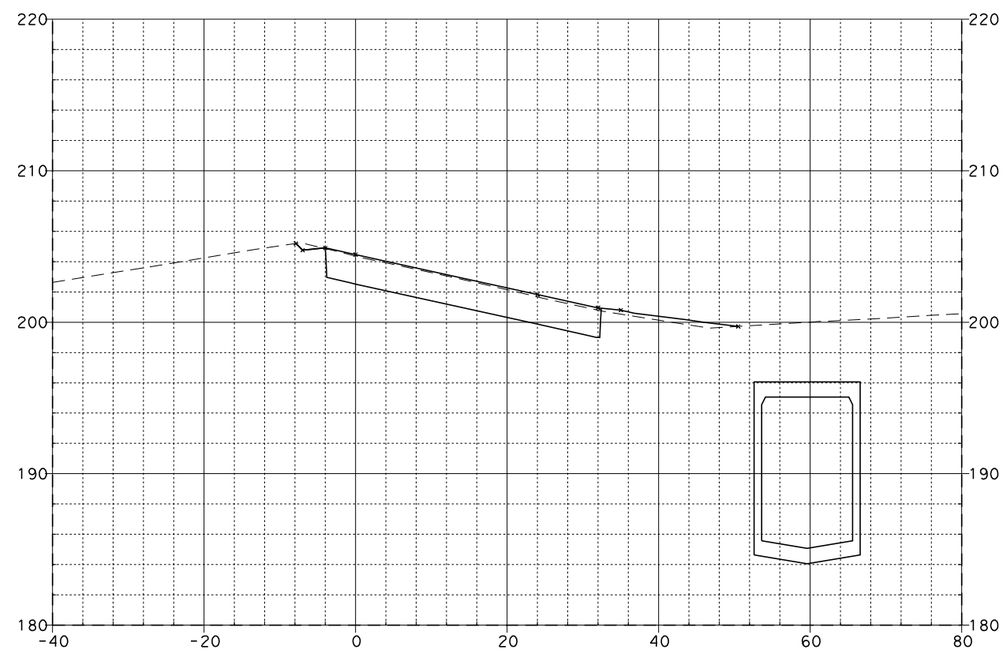

86+03.00

LINCOLN ON-RAMP "E-6"

EA 0F0401

SCALE: Horiz 1"=20'
Vert 1"=10'

08\03\11

Dist	COUNTY	ROUTE	POST MILES TOTAL PROJECT	SHEET No.	TOTAL SHEETS
12	Ora	57	12.2/15.2		

FOR EARTHWORK DEVELOPMENT ONLY

...\d0282599\Cross_Sections.dgn

EA 0F0401

SCALE: Horiz 1"=20'
Vert 1"=10'

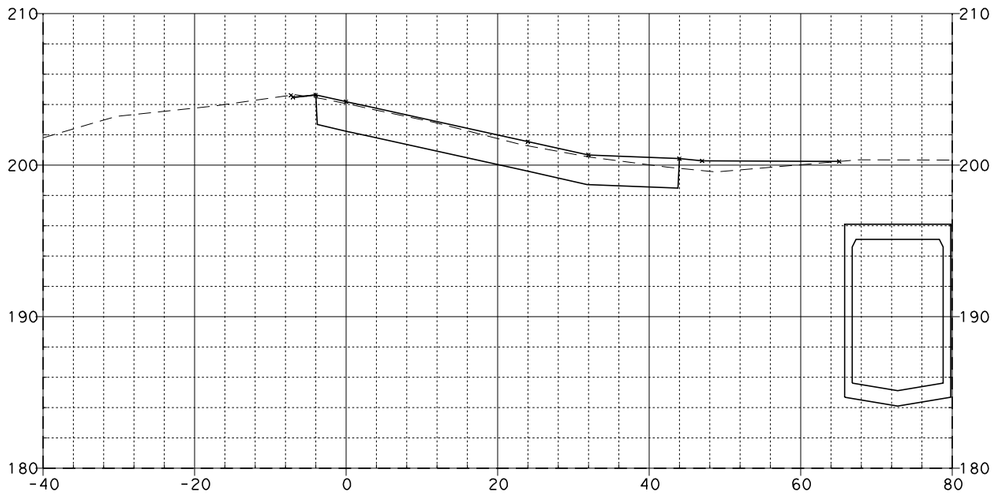

86+50.00

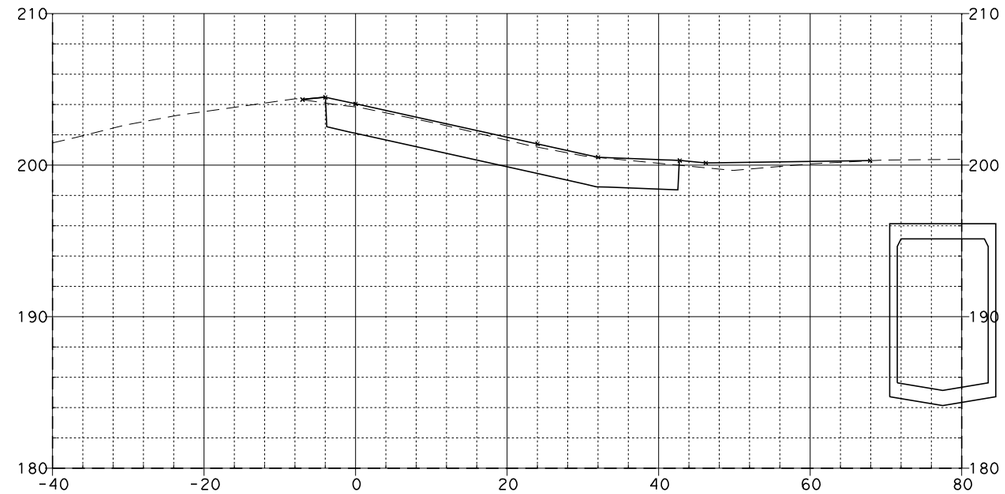

86+75.00

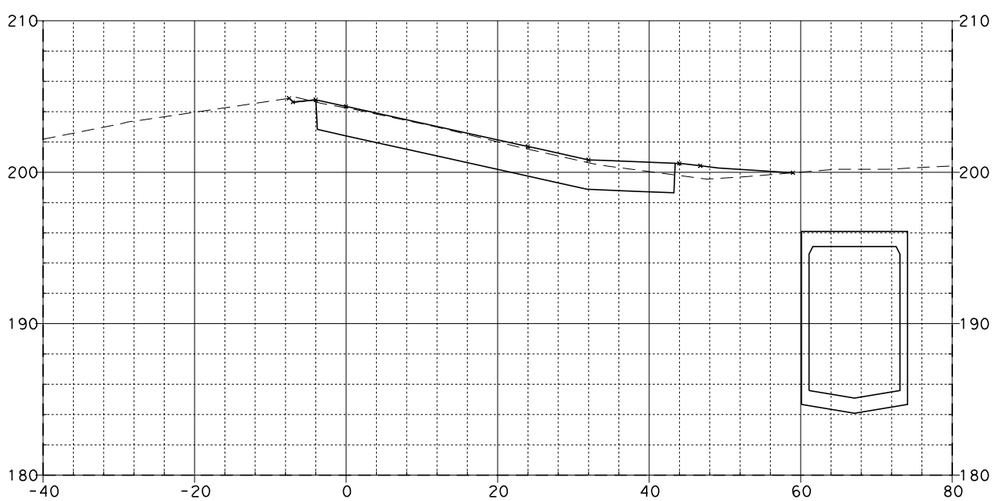

86+25.00

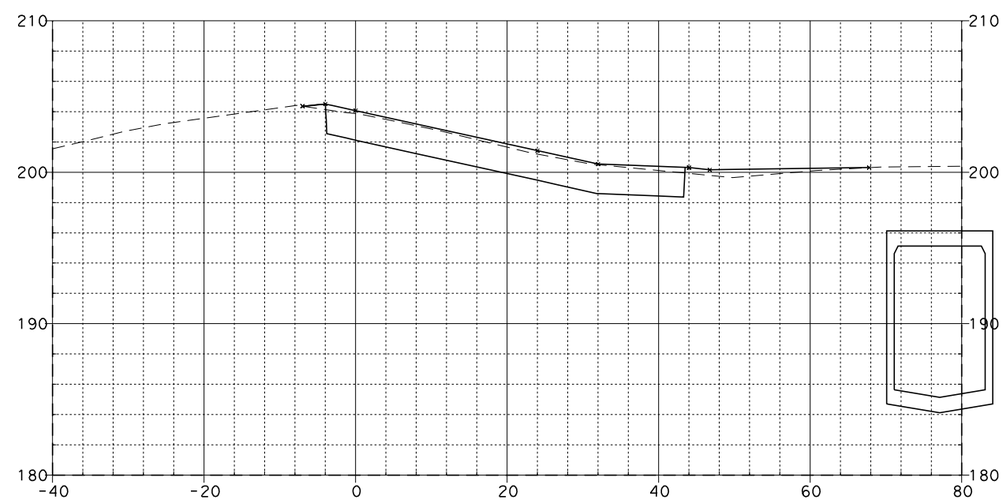

86+72.72

LINCOLN ON-RAMP "E-6"

08\03\11

Dist	COUNTY	ROUTE	POST MILES TOTAL PROJECT	SHEET NO.	TOTAL SHEETS
12	Ora	57	12.2/15.2		

FOR EARTHWORK DEVELOPMENT ONLY

...\d0282599\Cross_Sections.dgn

EA 0F0401

SCALE: Horiz 1"=20'
Vert 1"=10'

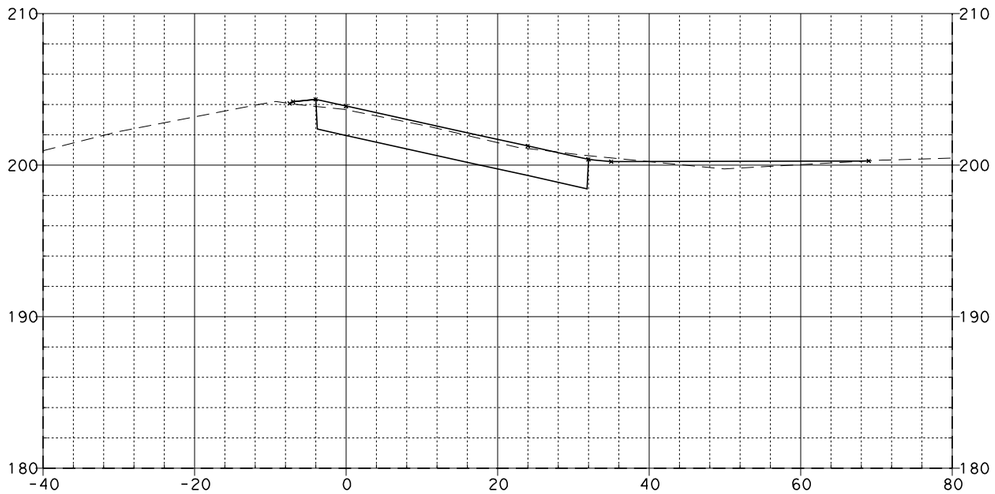

87+00.00

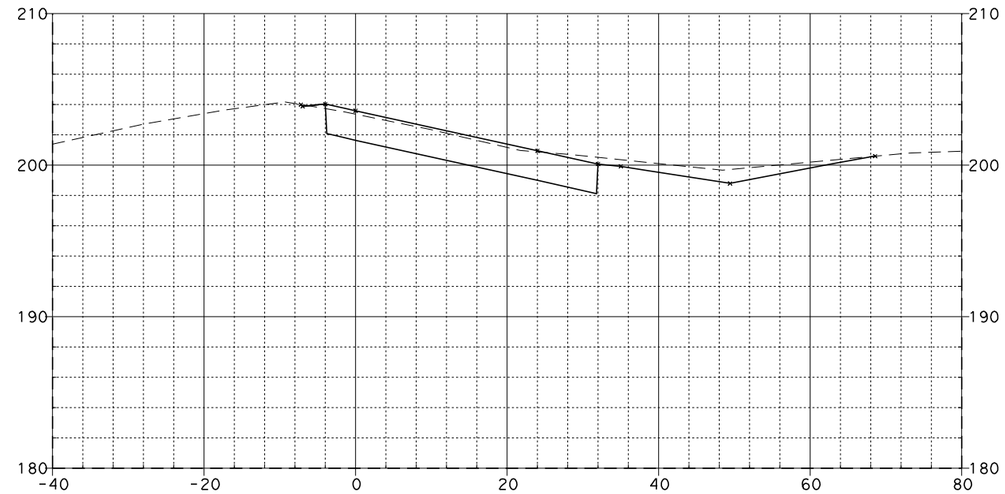

87+50.00

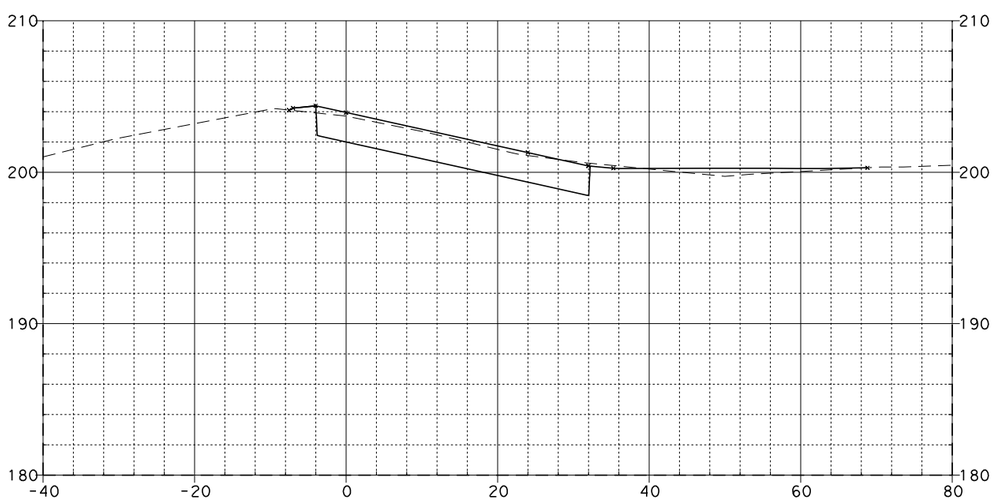

86+94.17

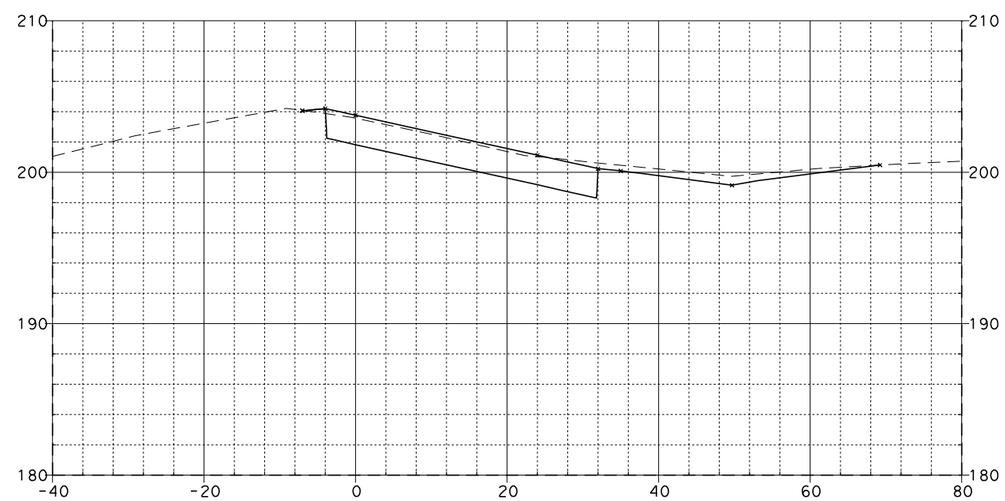

87+25.00

LINCOLN ON-RAMP "E-6"

08\03\11

Dist	COUNTY	ROUTE	POST MILES TOTAL PROJECT	SHEET NO.	TOTAL SHEETS
12	Ora	57	12.2/15.2		

FOR EARTHWORK DEVELOPMENT ONLY

...\d0282599\Cross_Sections.dgn

EA 0F0401

SCALE: Horiz 1"=20'
Vert 1"=10'

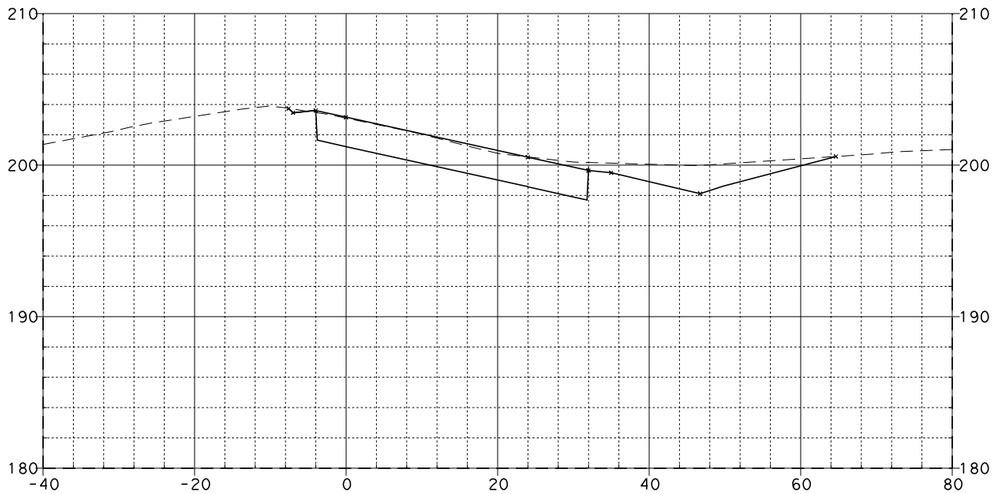

88+00.00

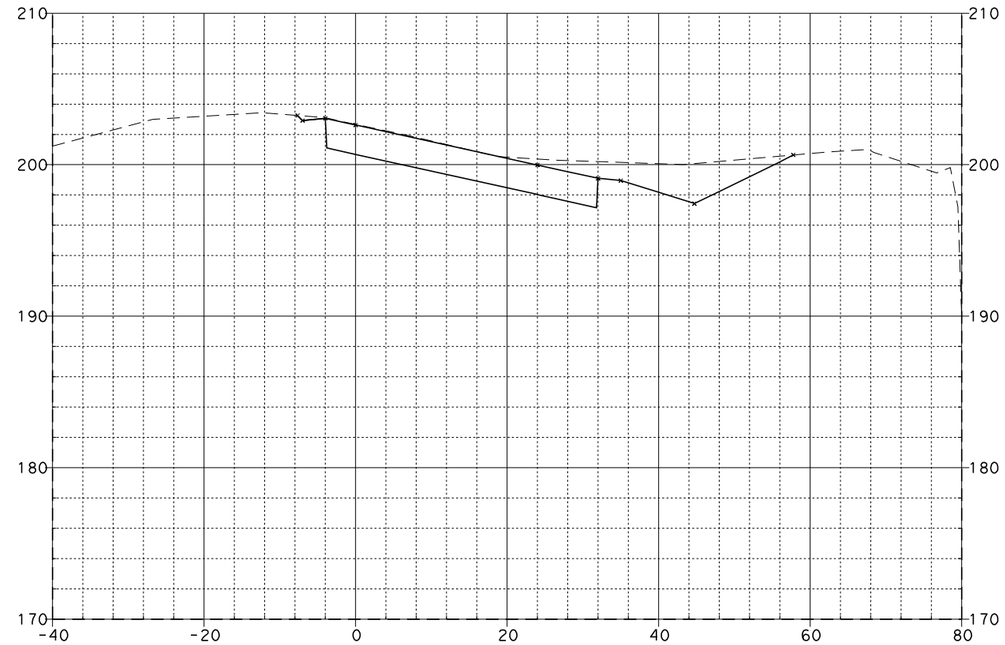

88+50.00

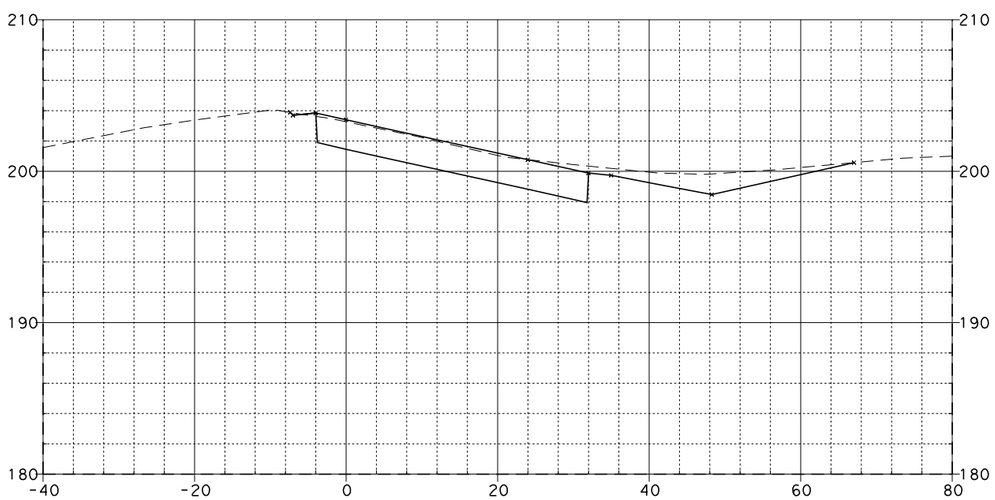

87+75.00

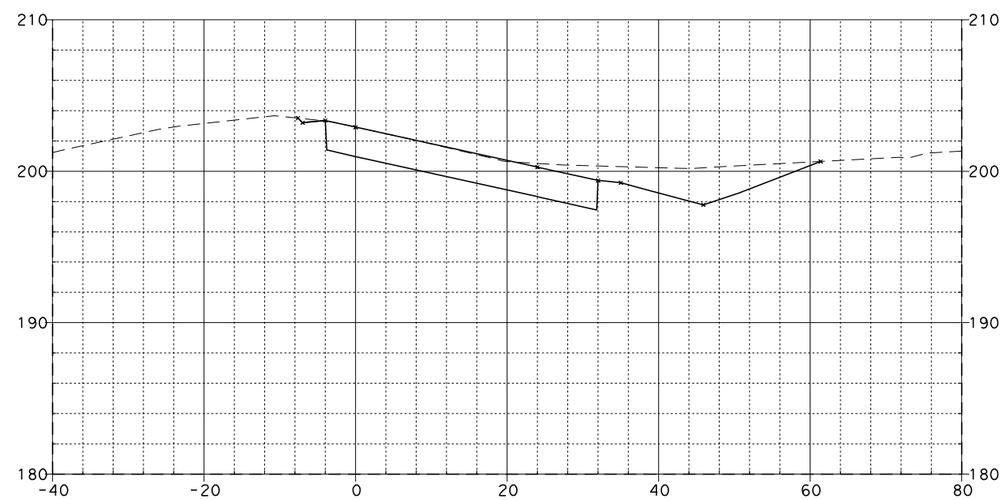

88+25.00

LINCOLN ON-RAMP "E-6"

08\03\11

Dist	COUNTY	ROUTE	POST MILES TOTAL PROJECT	SHEET NO.	TOTAL SHEETS
12	Ora	57	12.2/15.2		

FOR EARTHWORK DEVELOPMENT ONLY

...\d0282599\Cross_Sections.dgn

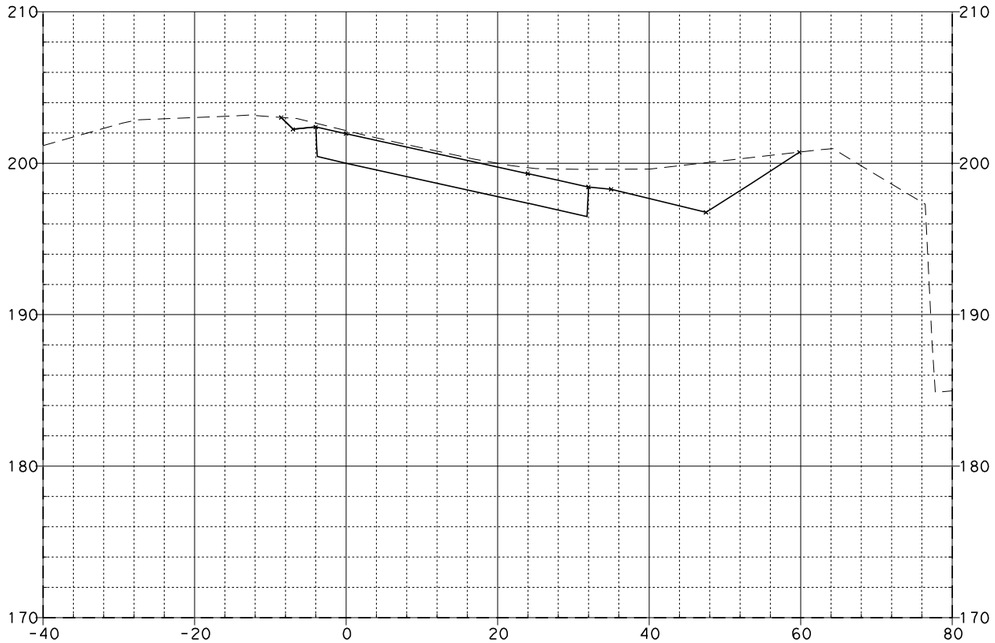

89+00.00

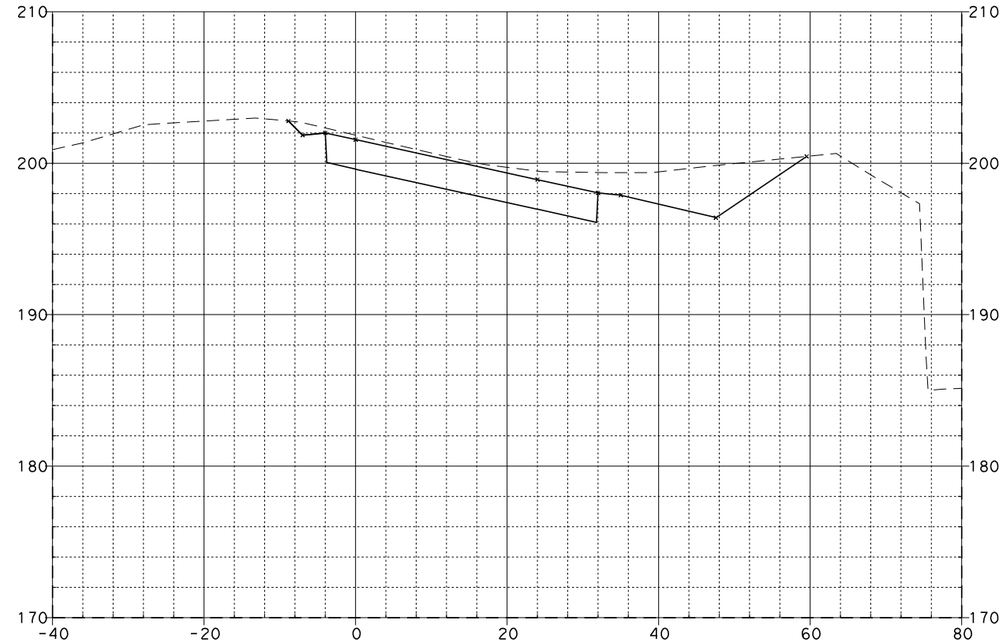

89+25.91

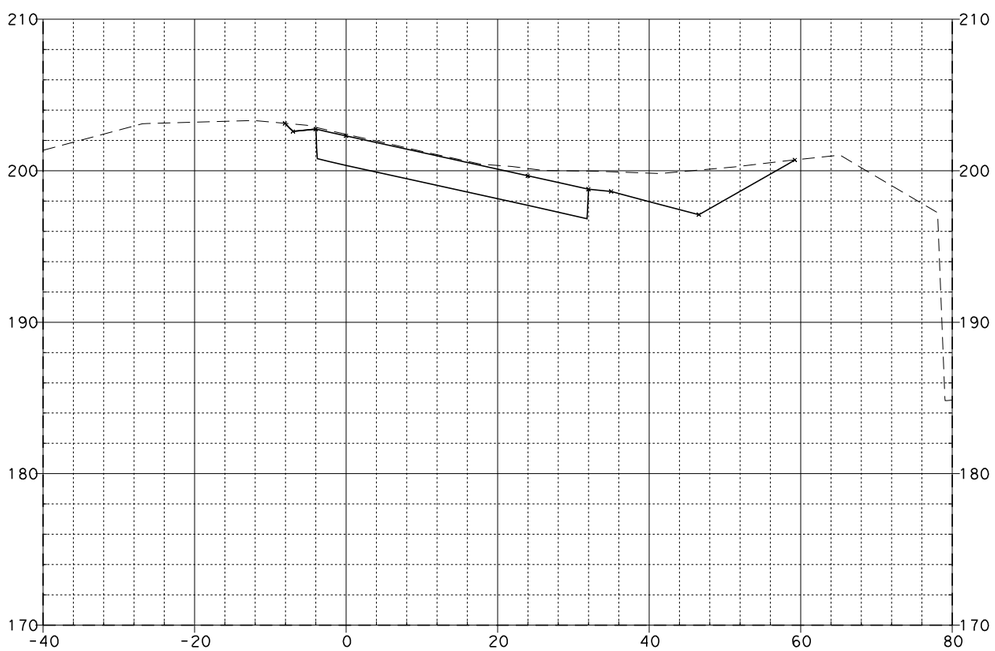

88+75.00

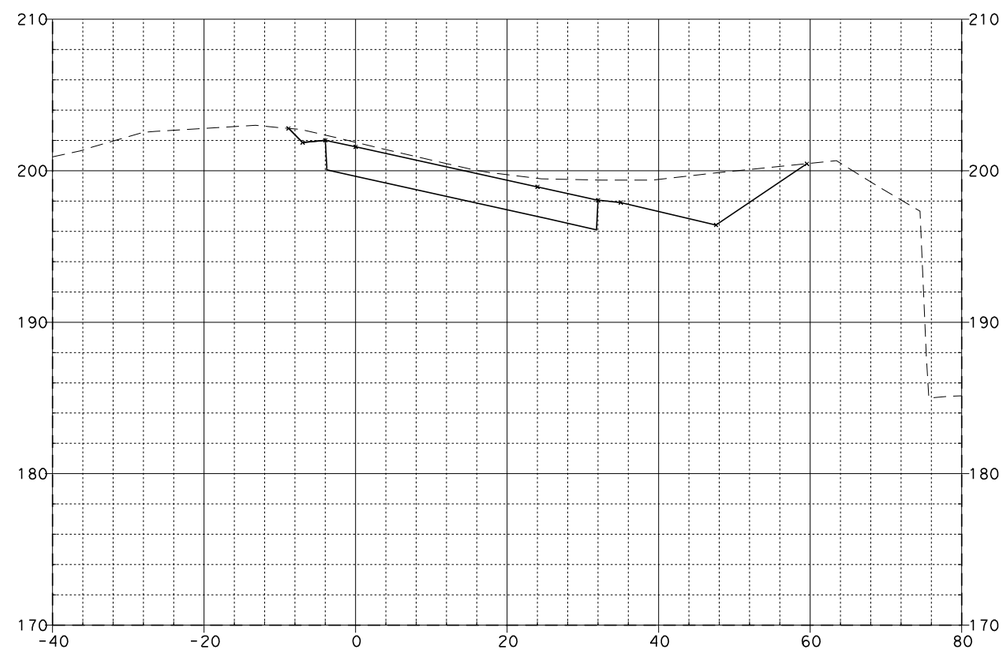

89+25.00

LINCOLN ON-RAMP "E-6"

EA 0F0401

SCALE: Horiz 1"=20'
Vert 1"=10'

08\03\11

Dist	COUNTY	ROUTE	POST MILES TOTAL PROJECT	SHEET No.	TOTAL SHEETS
12	Ora	57	12.2/15.2		

FOR EARTHWORK DEVELOPMENT ONLY

...\d0282599\Cross_Sections.dgn

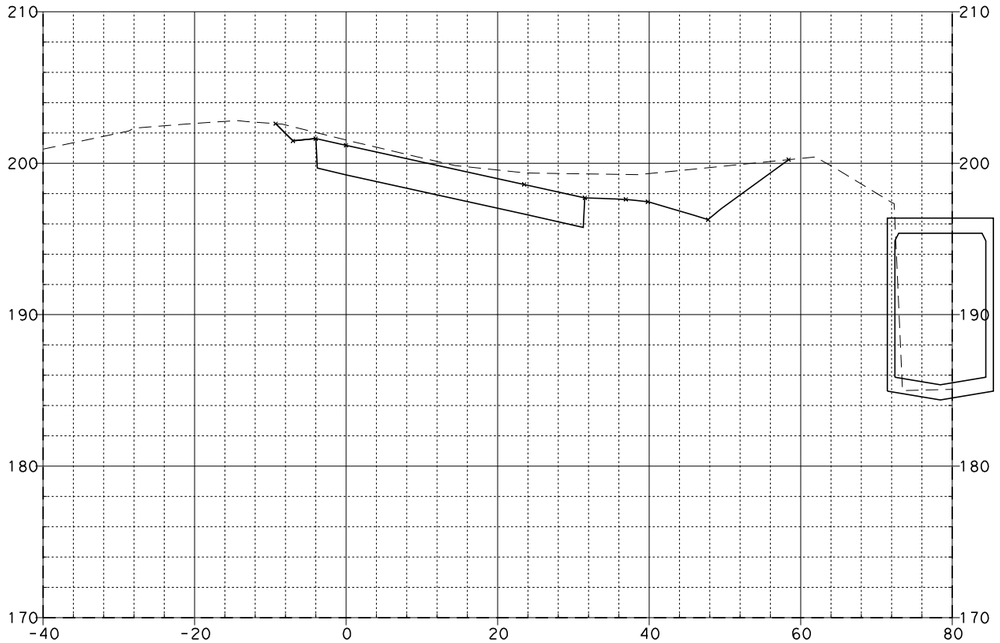

89+50.00

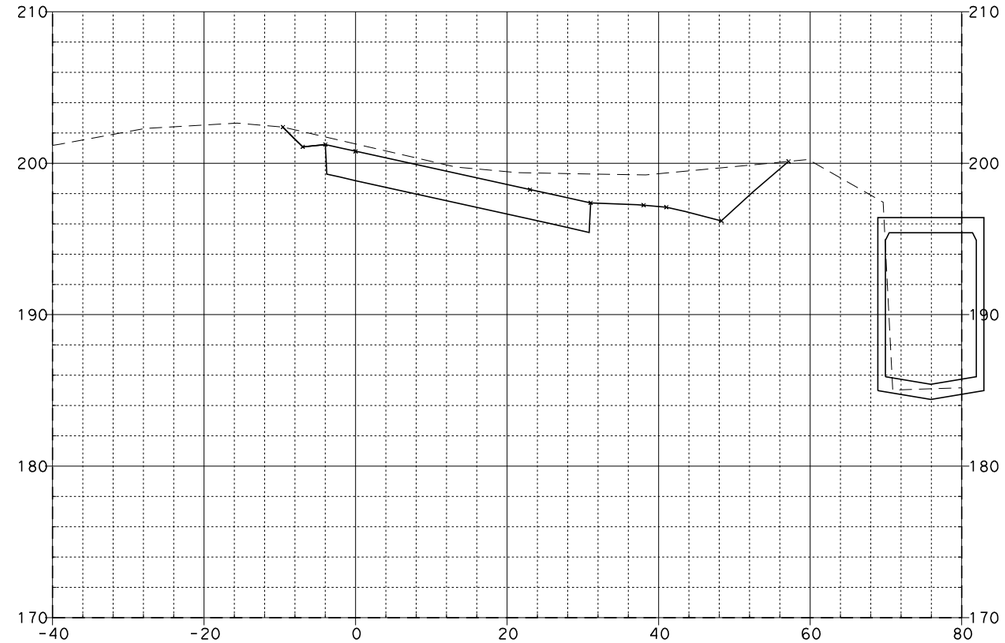

89+75.00

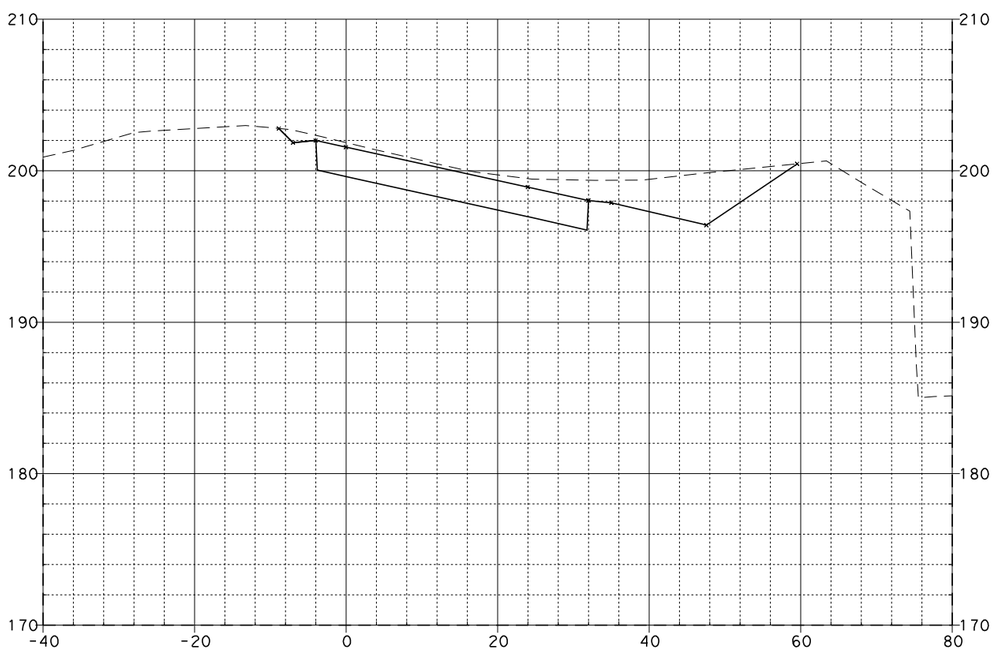

89+26.00

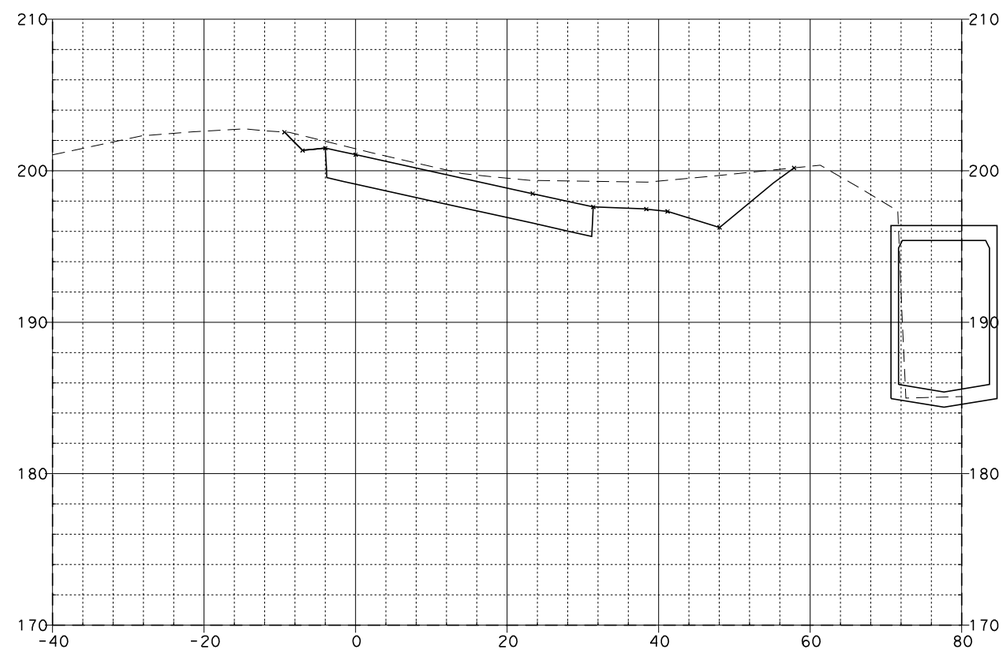

89+58.04

LINCOLN ON-RAMP "E-6"

EA 0F0401

SCALE: Horiz 1"=20'
Vert 1"=10'

08\03\11

Dist	COUNTY	ROUTE	POST MILES TOTAL PROJECT	SHEET No.	TOTAL SHEETS
12	Ora	57	12.2/15.2		

FOR EARTHWORK DEVELOPMENT ONLY

...\d0282599\Cross_Sections.dgn

EA 0F0401

SCALE: Horiz 1"=20'
Vert 1"=10'

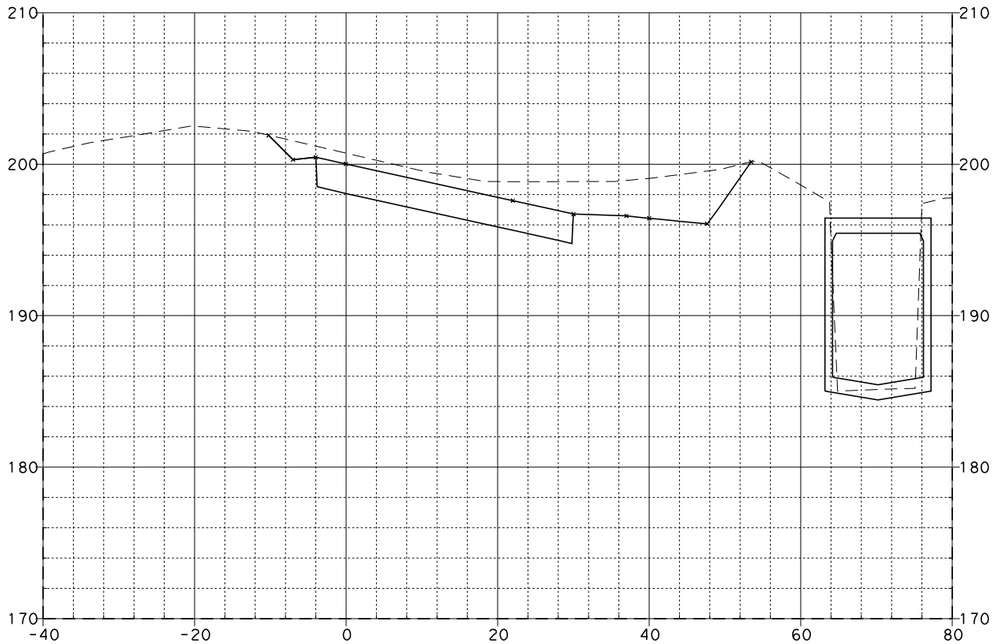

90+25.00

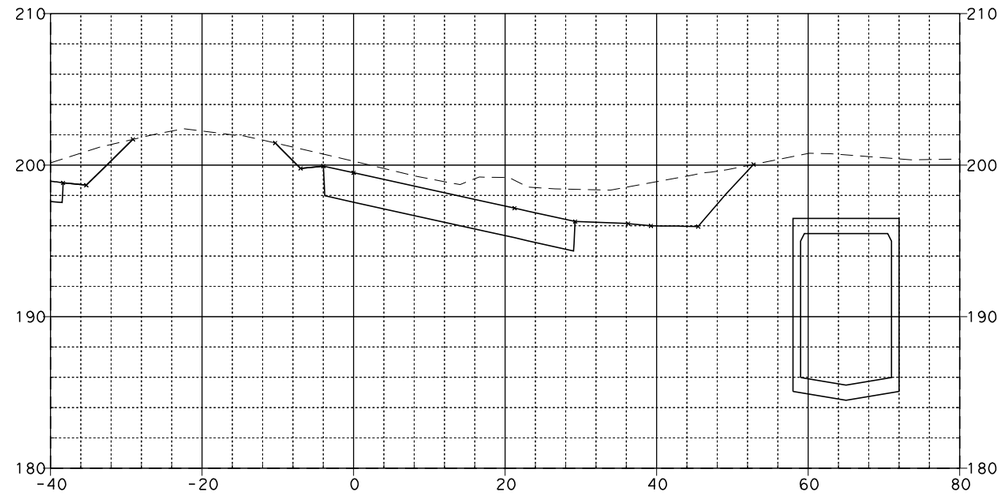

90+64.11

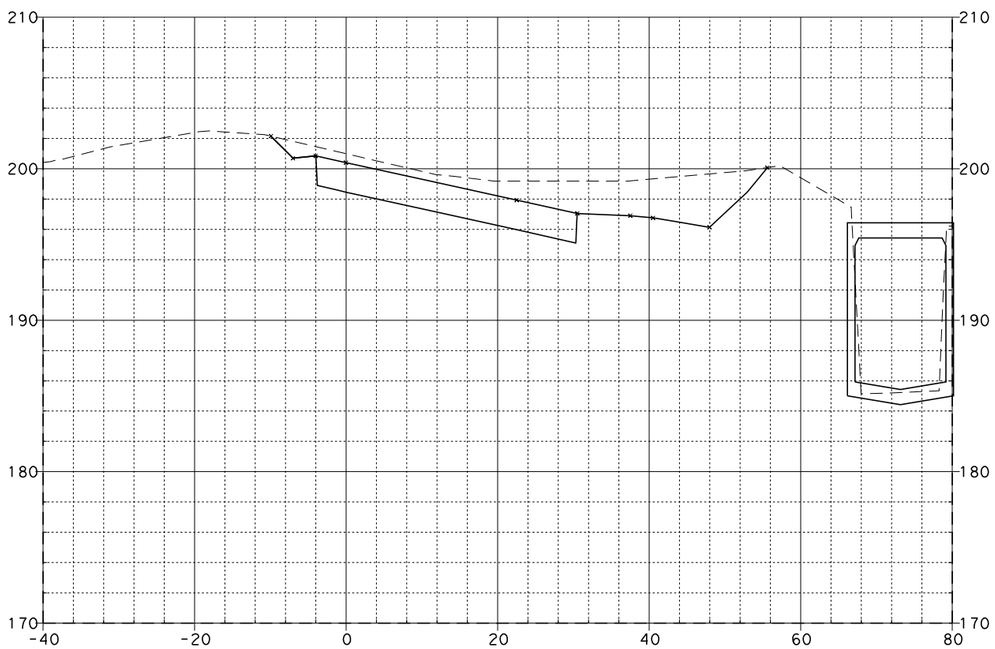

90+00.00

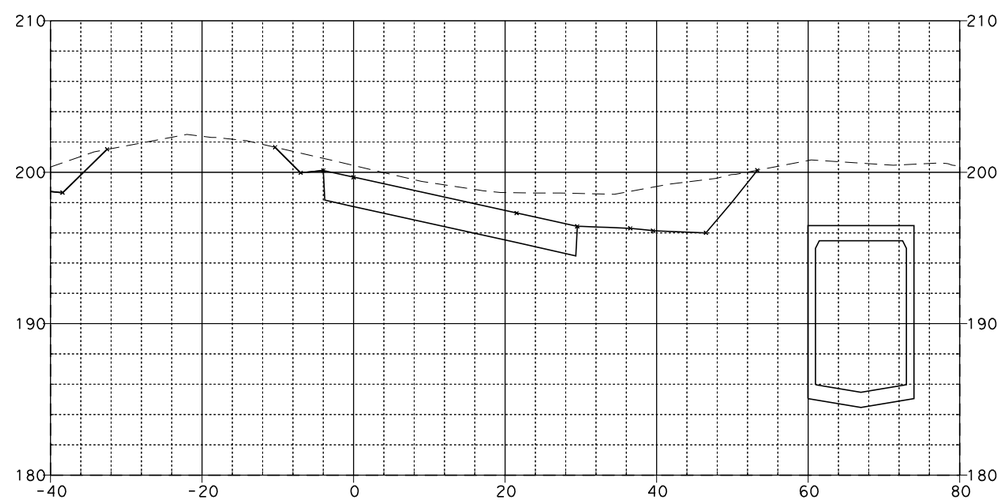

90+50.00

LINCOLN ON-RAMP "E-6"

08\03\11

Dist	COUNTY	ROUTE	POST MILES TOTAL PROJECT	SHEET No.	TOTAL SHEETS
12	Ora	57	12.2/15.2		

FOR EARTHWORK DEVELOPMENT ONLY

...\d0282599\Cross_Sections.dgn

EA 0F0401

SCALE: Horiz 1"=20'
Vert 1"=10'

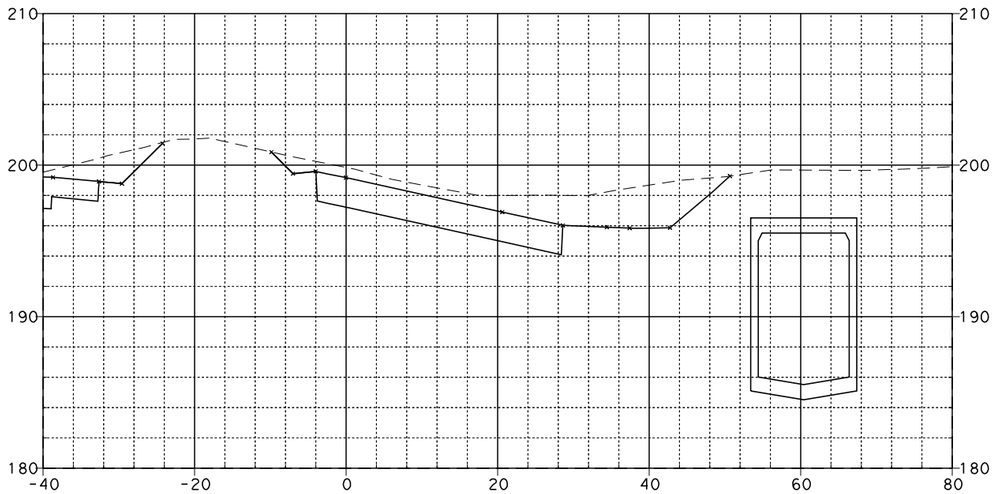

90+95.47

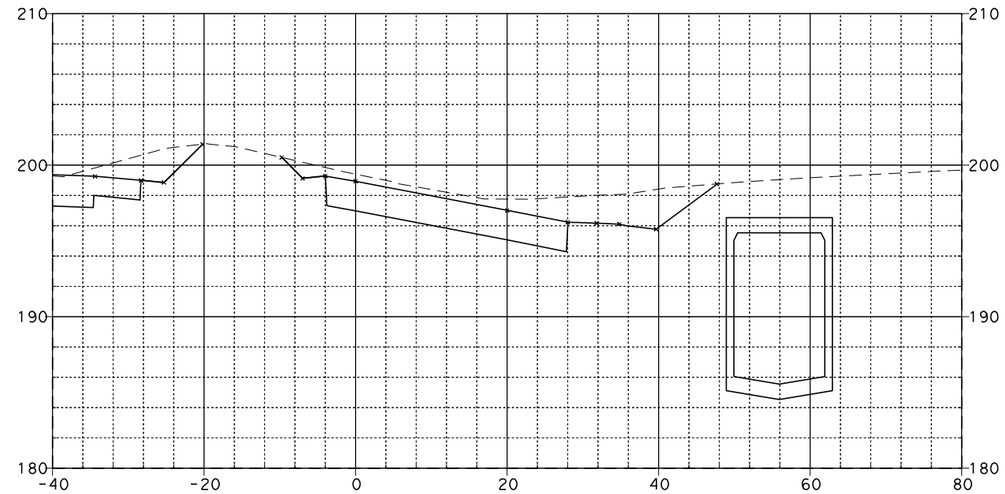

91+25.00

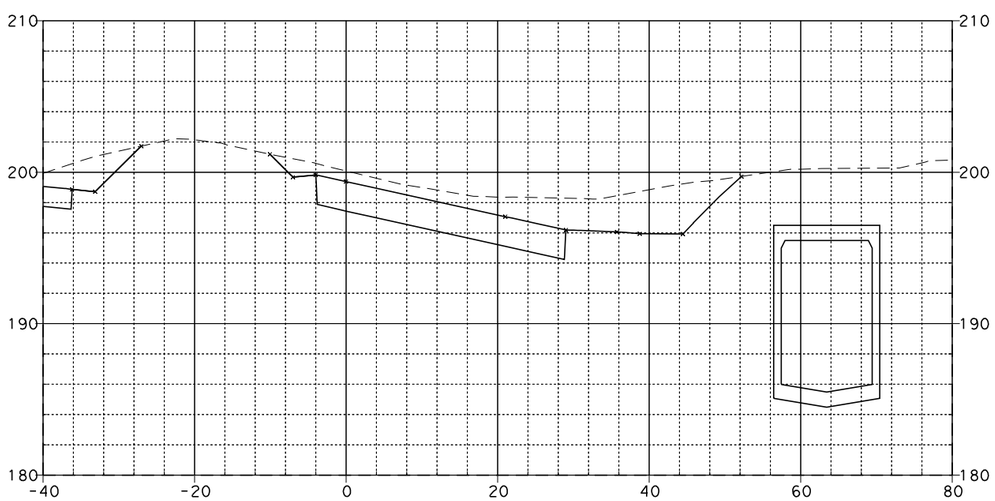

90+75.00

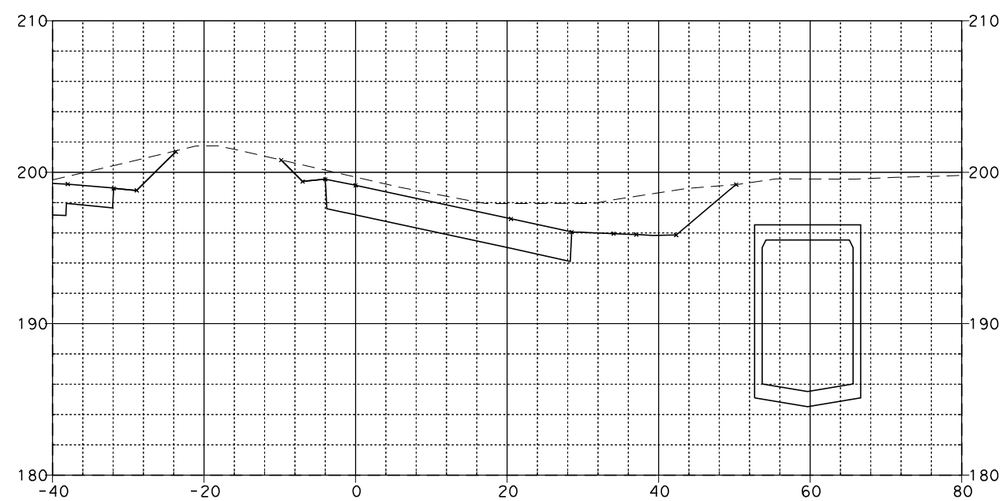

91+00.00

LINCOLN ON-RAMP "E-6"

08\03\11

Dist	COUNTY	ROUTE	POST MILES TOTAL PROJECT	SHEET NO.	TOTAL SHEETS
12	Ora	57	12.2/15.2		

FOR EARTHWORK DEVELOPMENT ONLY

...\d0282599\Cross_Sections.dgn

EA 0F0401

SCALE: Horiz 1"=20'
Vert 1"=10'

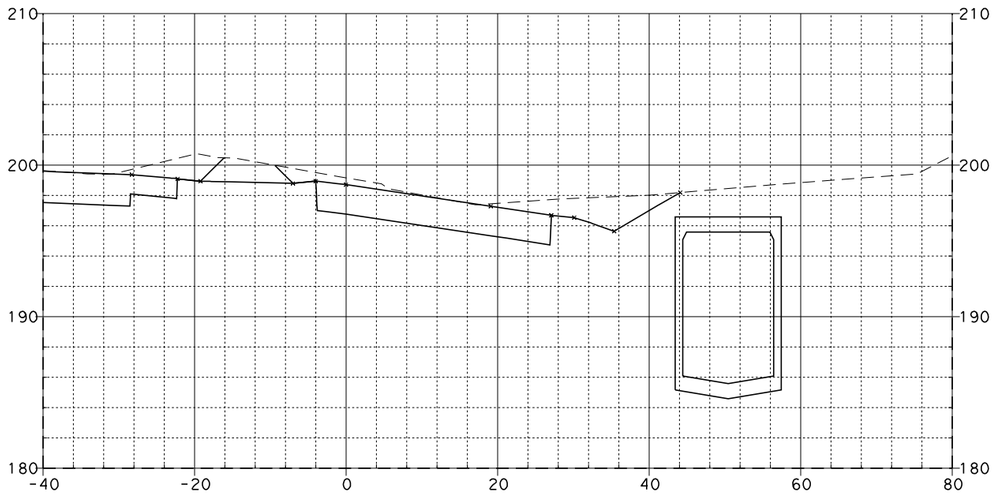

91+71.18

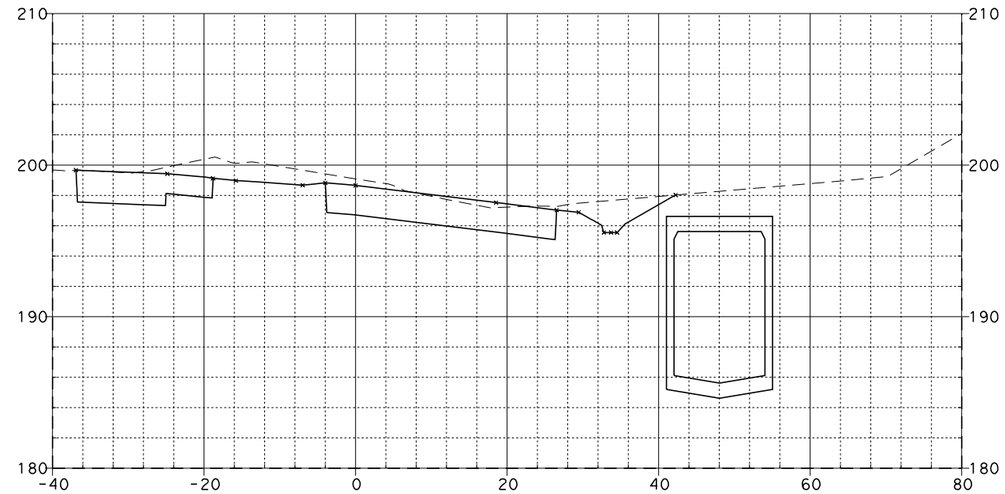

92+00.00

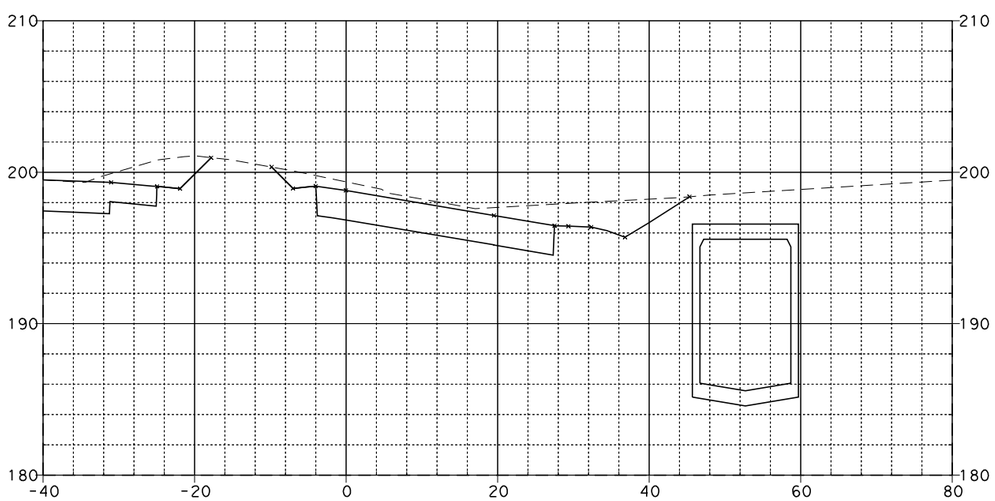

91+50.00

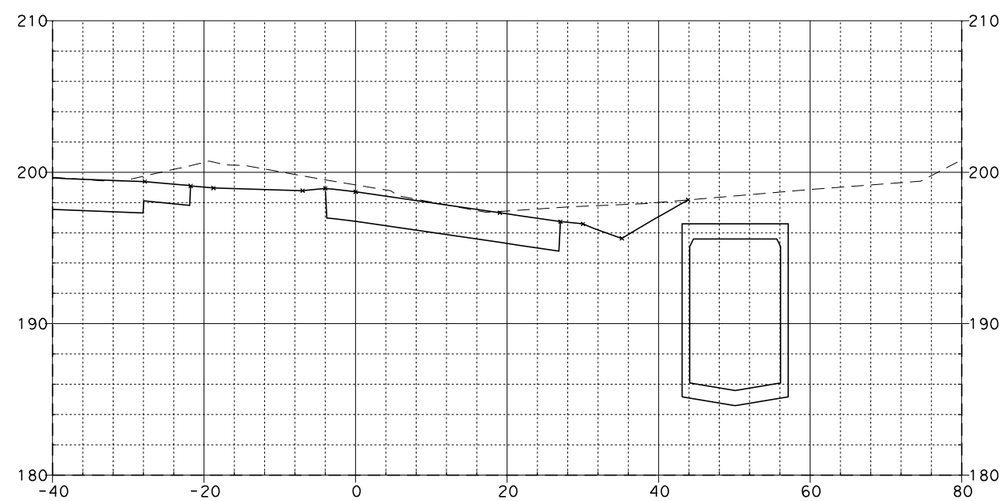

91+75.00

LINCOLN ON-RAMP "E-6"

08\03\11

Dist	COUNTY	ROUTE	POST MILES TOTAL PROJECT	SHEET NO.	TOTAL SHEETS
12	Ora	57	12.2/15.2		

FOR EARTHWORK DEVELOPMENT ONLY

...\d0282599\Cross_Sections.dgn

EA 0F0401

SCALE: Horiz 1"=20'
Vert 1"=10'

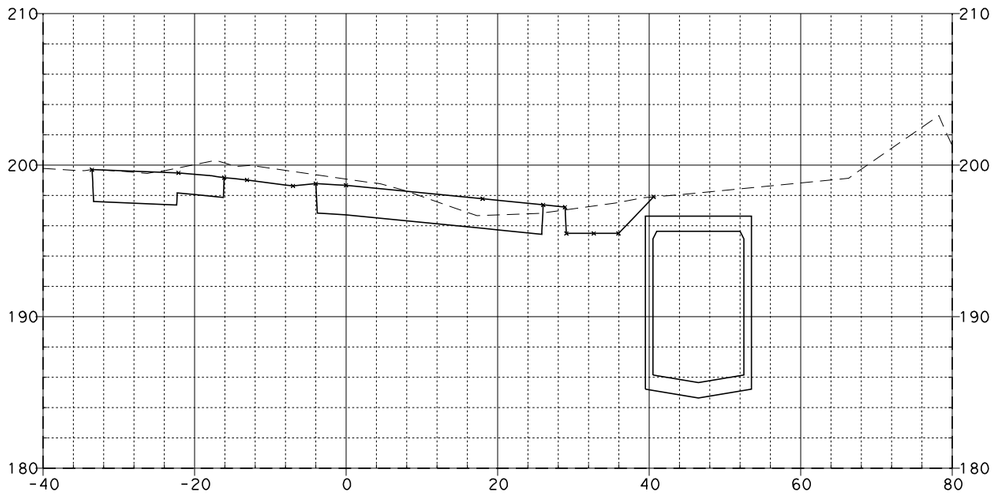

92+25.00

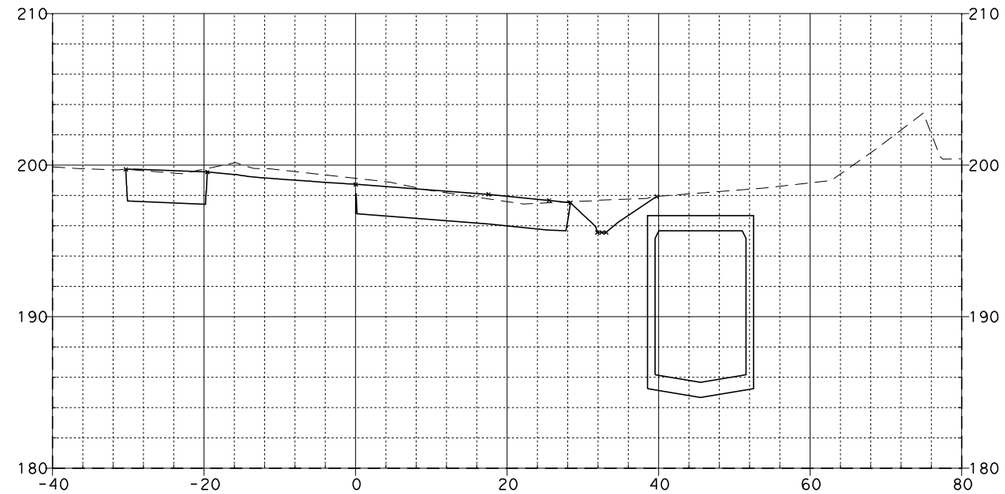

92+50.00

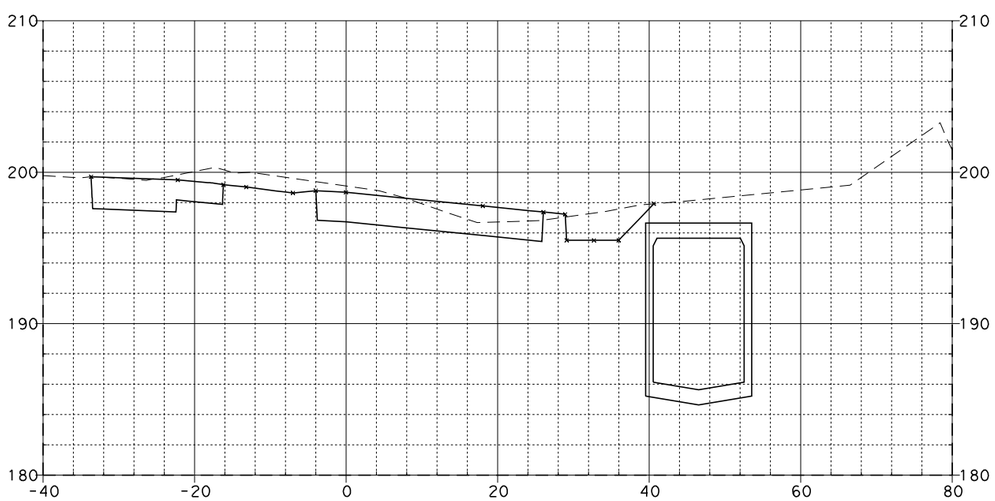

92+24.04

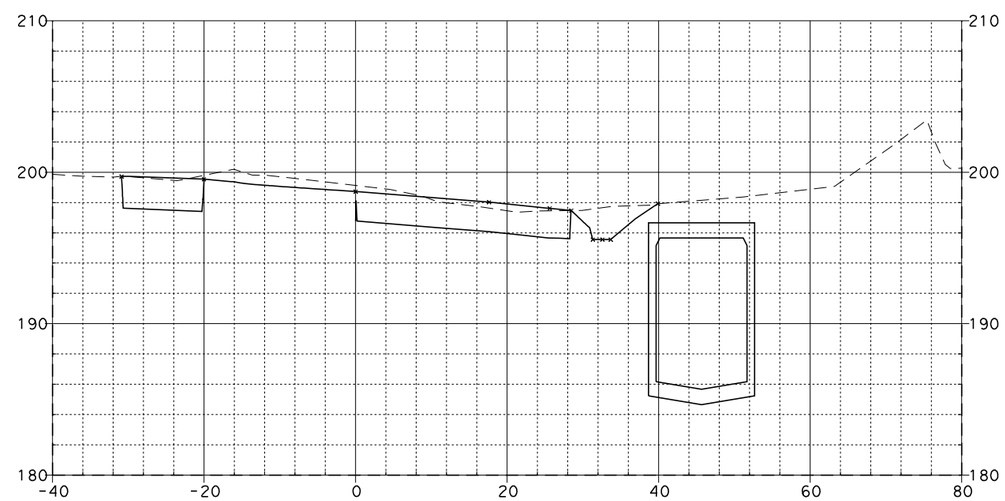

92+45.47

LINCOLN ON-RAMP "E-6"

08\03\11

Dist	COUNTY	ROUTE	POST MILES TOTAL PROJECT	SHEET NO.	TOTAL SHEETS
12	Ora	57	12.2/15.2		

FOR EARTHWORK DEVELOPMENT ONLY

...\d0282599\Cross_Sections.dgn

EA 0F0401

SCALE: Horiz 1"=20'
Vert 1"=10'

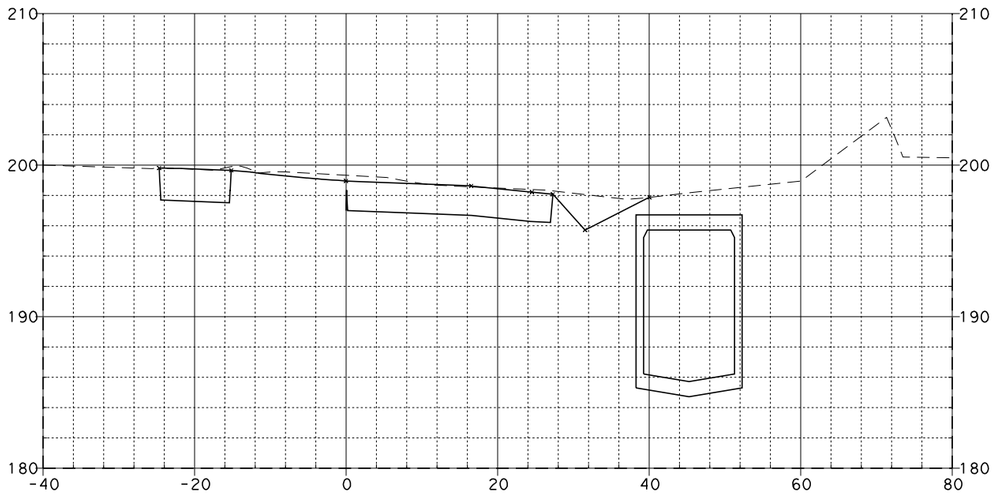

93+00.00

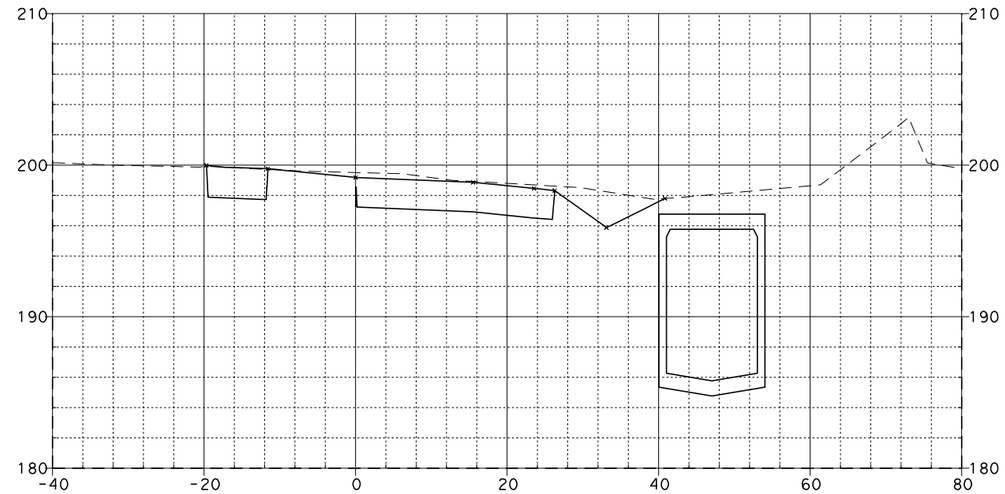

93+50.00

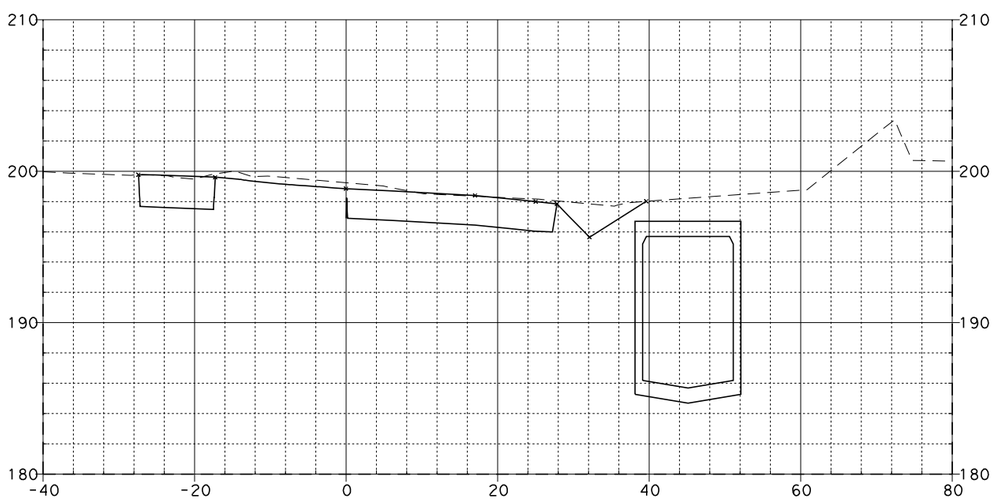

92+75.00

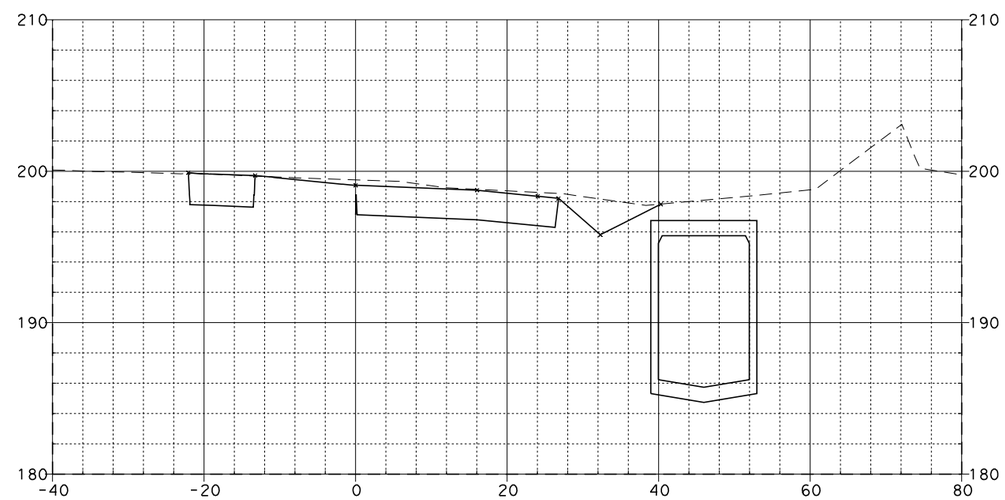

93+25.00

LINCOLN ON-RAMP "E-6"

08\03\11

Dist	COUNTY	ROUTE	POST MILES TOTAL PROJECT	SHEET NO.	TOTAL SHEETS
12	Ora	57	12.2/15.2		

FOR EARTHWORK DEVELOPMENT ONLY

...\d0282599\Cross_Sections.dgn

EA 0F0401

SCALE: Horiz 1"=20'
Vert 1"=10'

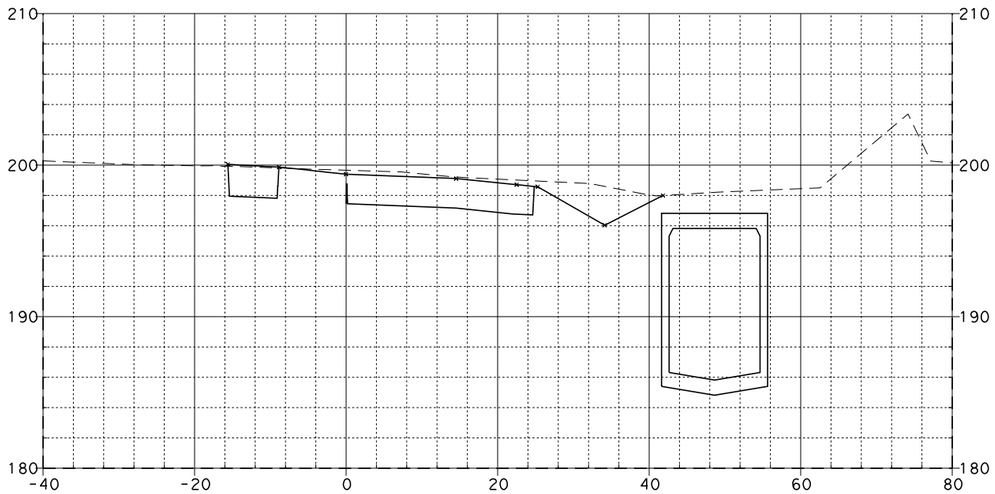

94+00.00

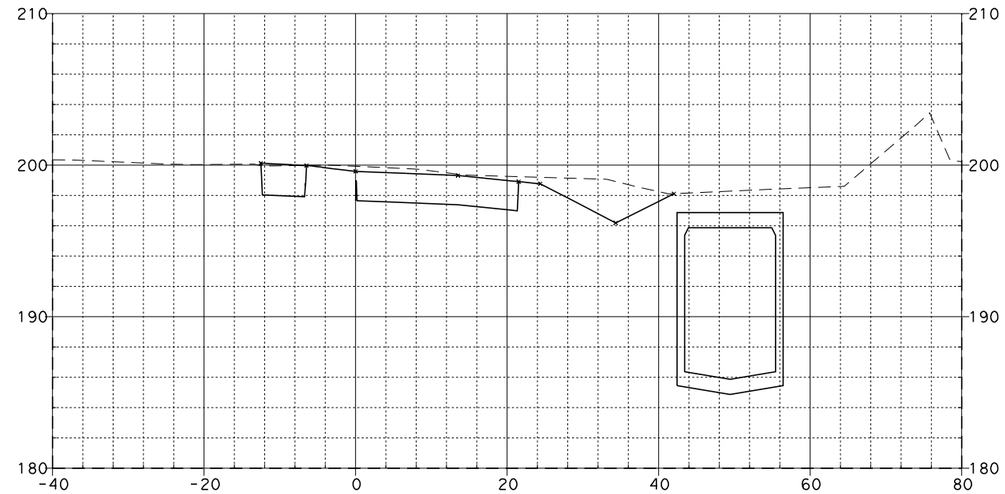

94+50.00

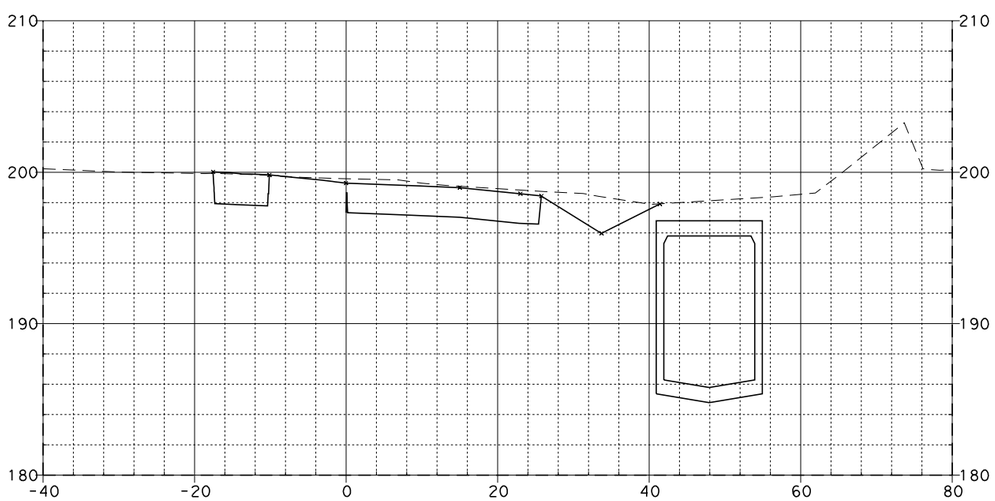

93+75.00

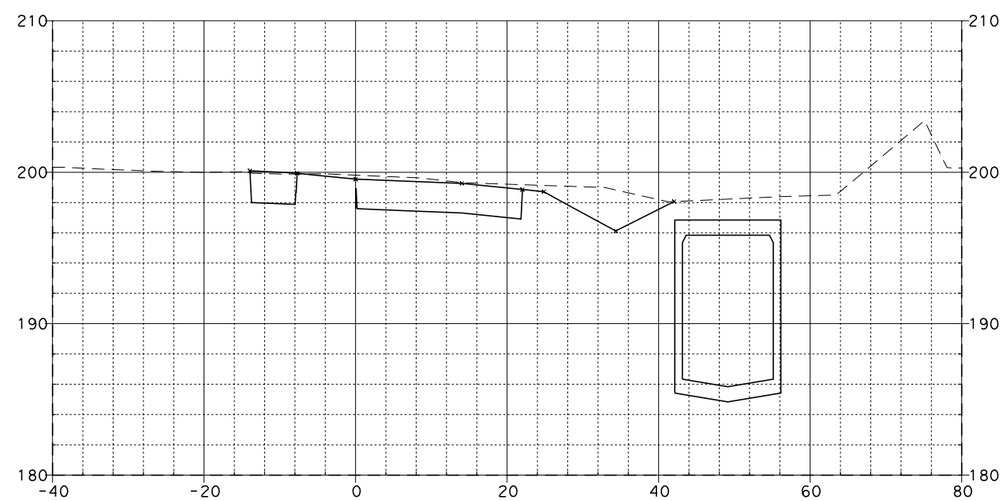

94+25.00

LINCOLN ON-RAMP "E-6"

08\03\11

Dist	COUNTY	ROUTE	POST MILES TOTAL PROJECT	SHEET NO.	TOTAL SHEETS
12	Ora	57	12.2/15.2		

FOR EARTHWORK DEVELOPMENT ONLY

...\d0282599\Cross_Sections.dgn

EA 0F0401

SCALE: Horiz 1"=20'
Vert 1"=10'

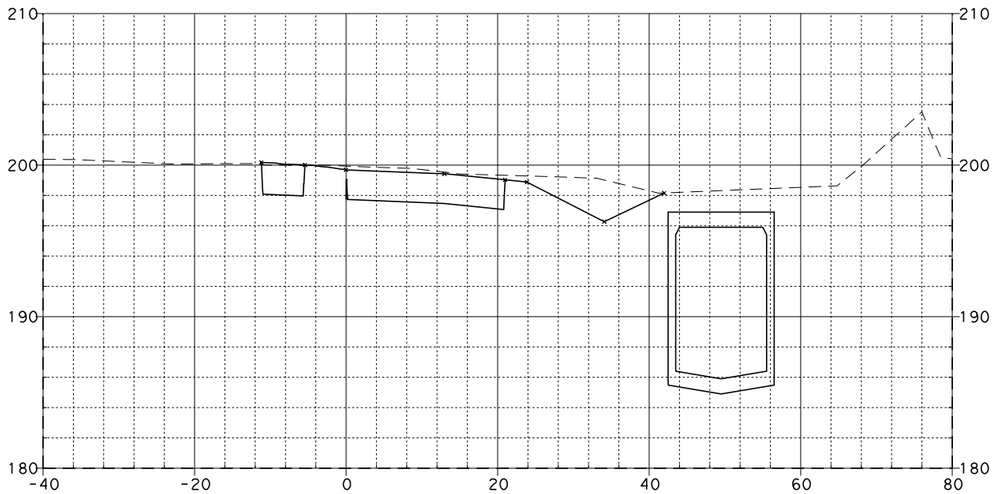

94+75.94

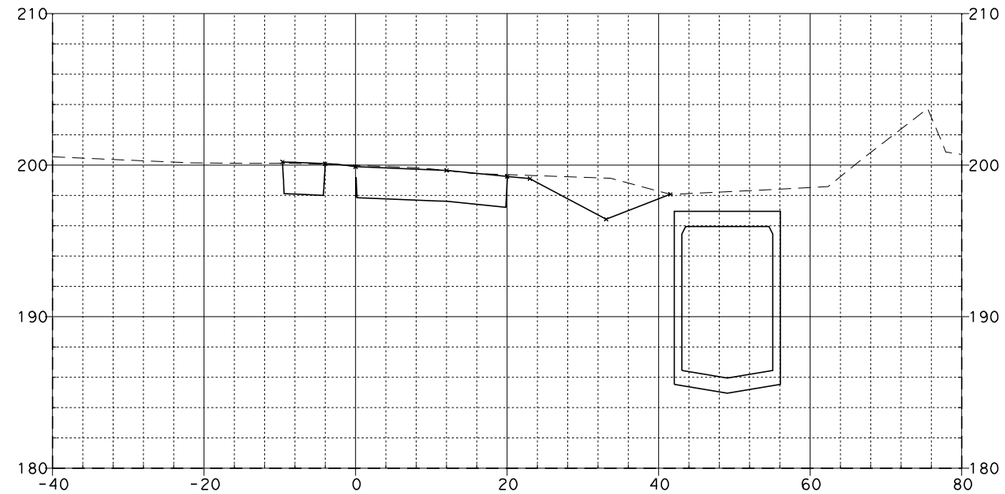

95+25.00

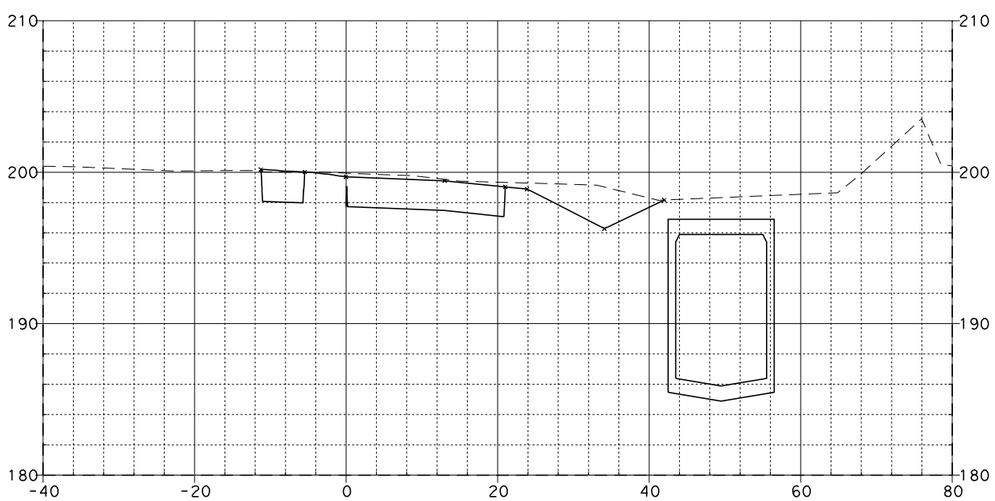

94+75.00

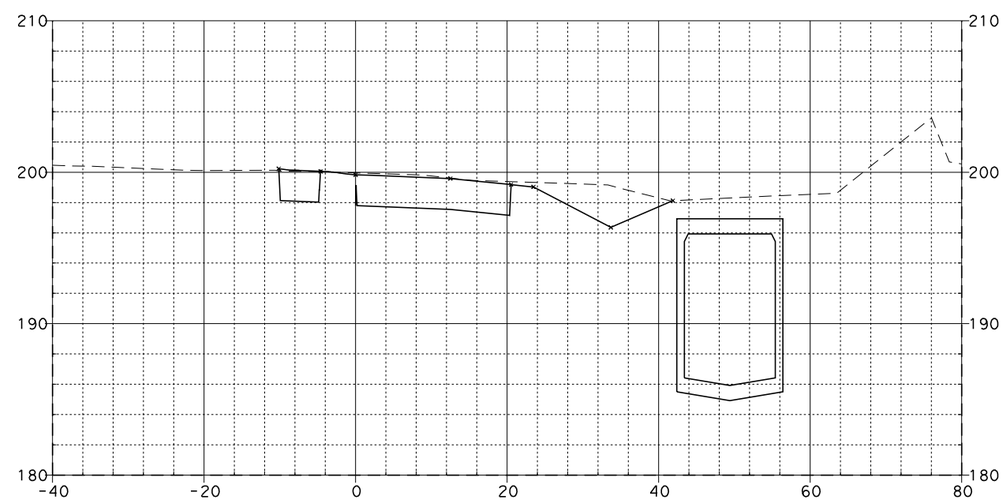

95+00.00

LINCOLN ON-RAMP "E-6"

08\03\11

Dist	COUNTY	ROUTE	POST MILES TOTAL PROJECT	SHEET NO.	TOTAL SHEETS
12	Ora	57	12.2/15.2		

FOR EARTHWORK DEVELOPMENT ONLY

...\d0282599\Cross_Sections.dgn

EA 0F0401

SCALE: Horiz 1"=20'
Vert 1"=10'

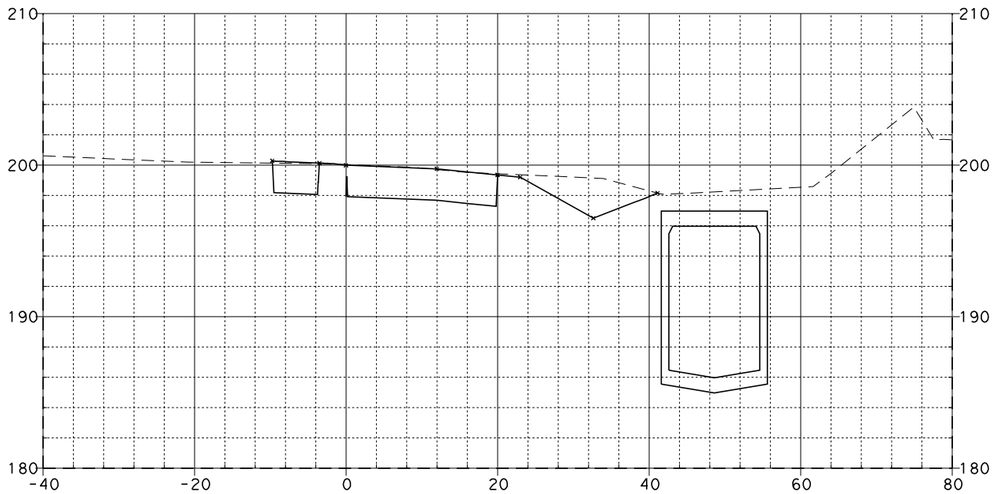

95+50.00

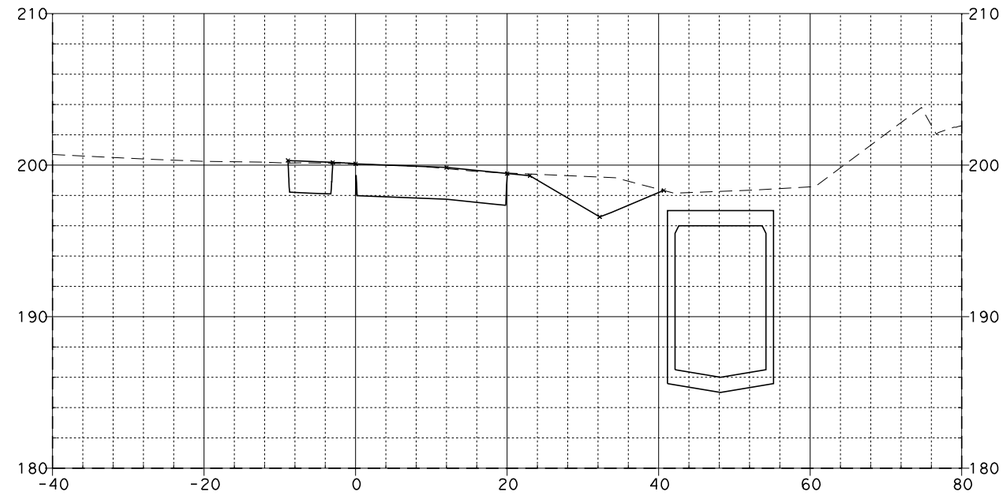

95+75.00

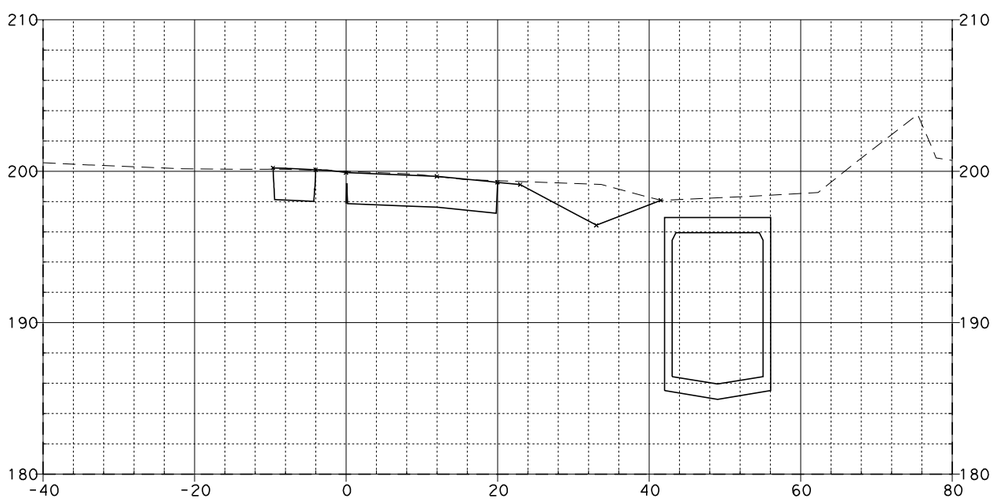

95+25.94

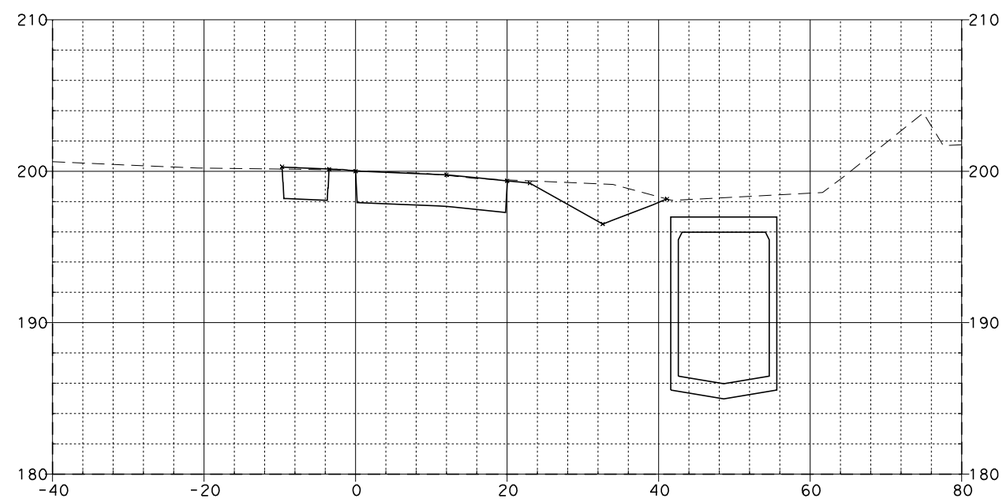

95+50.94

LINCOLN ON-RAMP "E-6"

08\03\11

Dist	COUNTY	ROUTE	POST MILES TOTAL PROJECT	SHEET NO.	TOTAL SHEETS
12	Ora	57	12.2/15.2		

FOR EARTHWORK DEVELOPMENT ONLY

...\d0282599\Cross_Sections.dgn

EA 0F0401

SCALE: Horiz 1"=20'
Vert 1"=10'

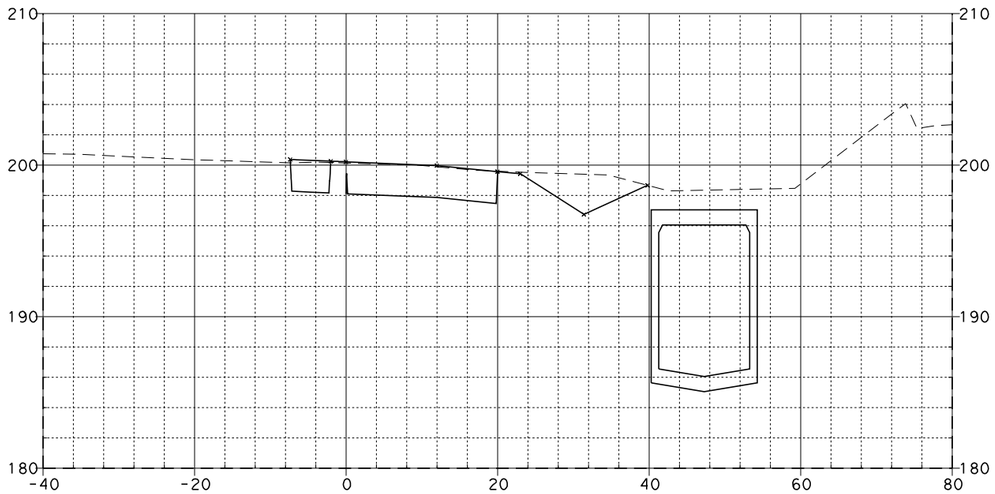

96+25.00

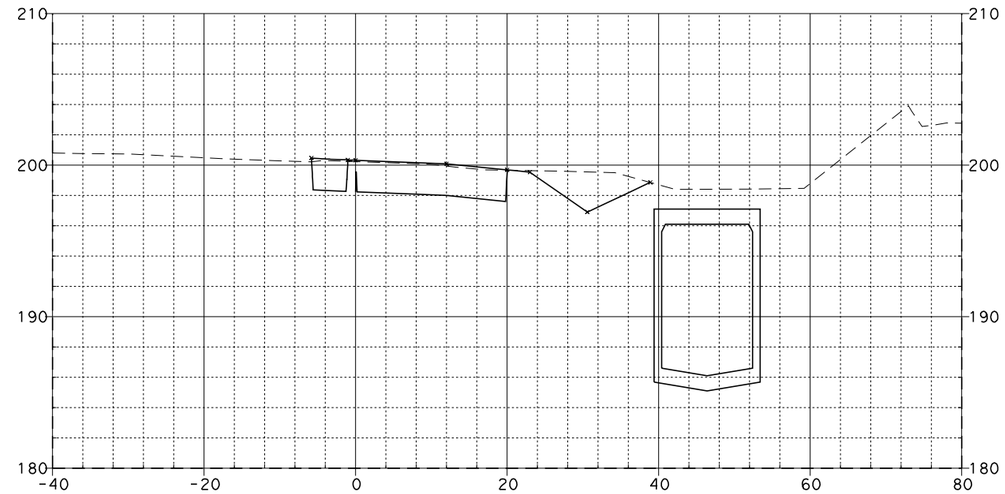

96+75.00

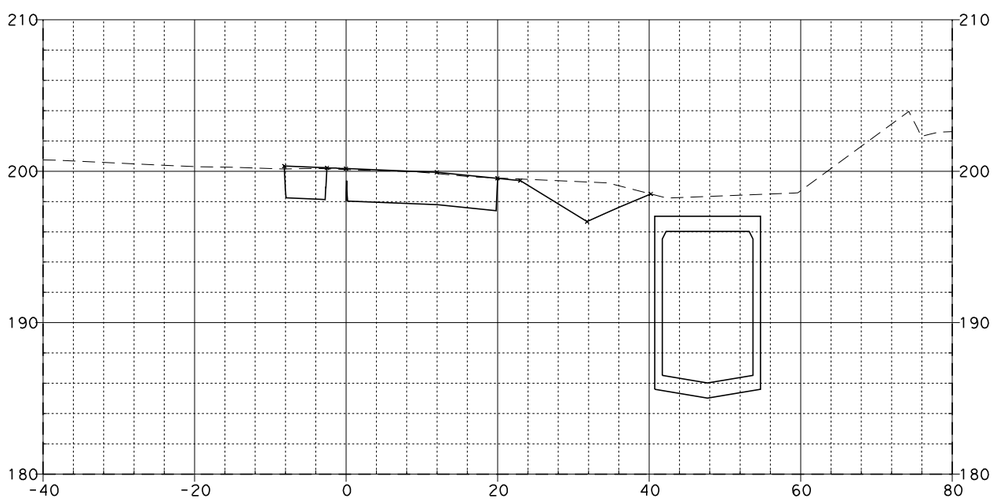

96+00.00

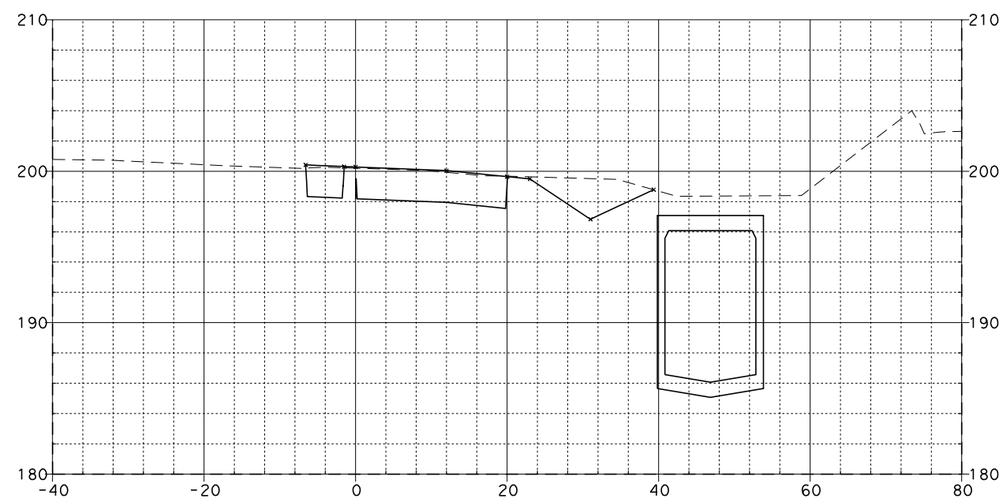

96+50.00

LINCOLN ON-RAMP "E-6"

08\03\11

Dist	COUNTY	ROUTE	POST MILES TOTAL PROJECT	SHEET NO.	TOTAL SHEETS
12	Ora	57	12.2/15.2		

FOR EARTHWORK DEVELOPMENT ONLY

...\d0282599\Cross_Sections.dgn

EA 0F0401

SCALE: Horiz 1"=20'
Vert 1"=10'

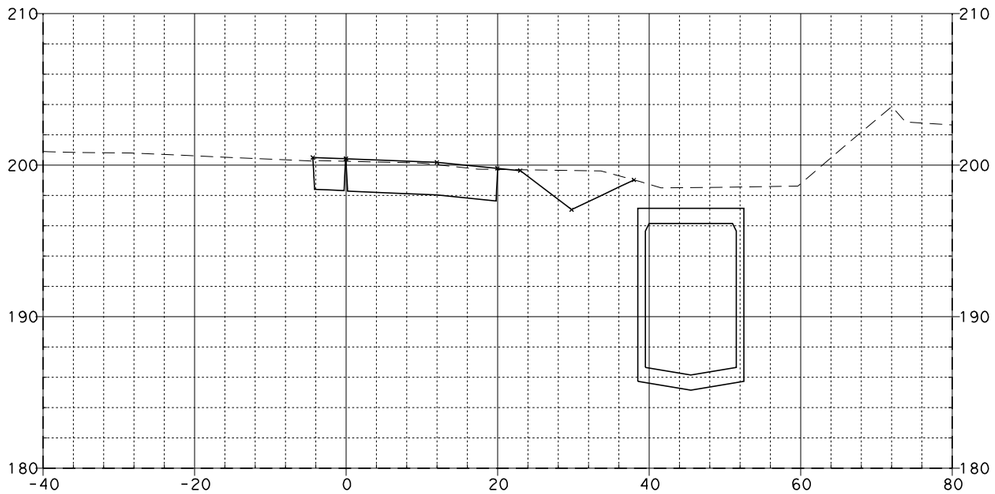

97+25.00

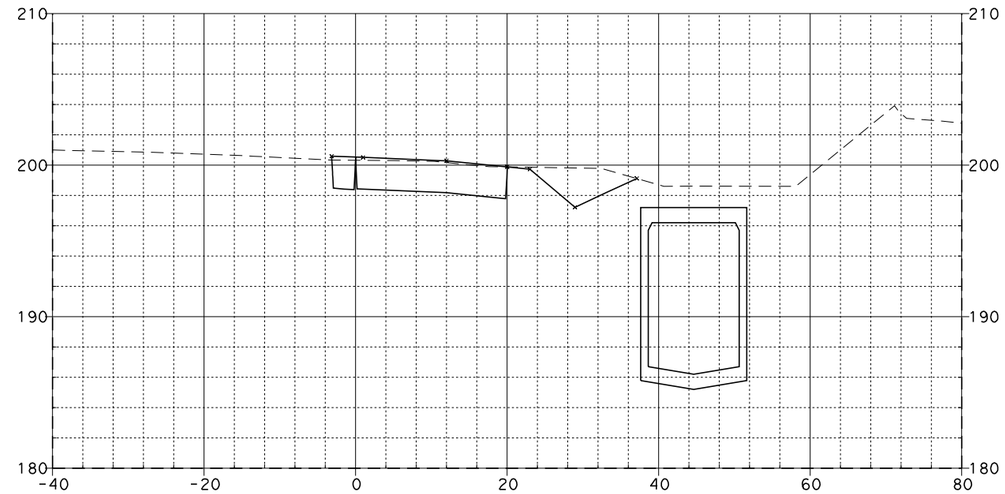

97+75.00

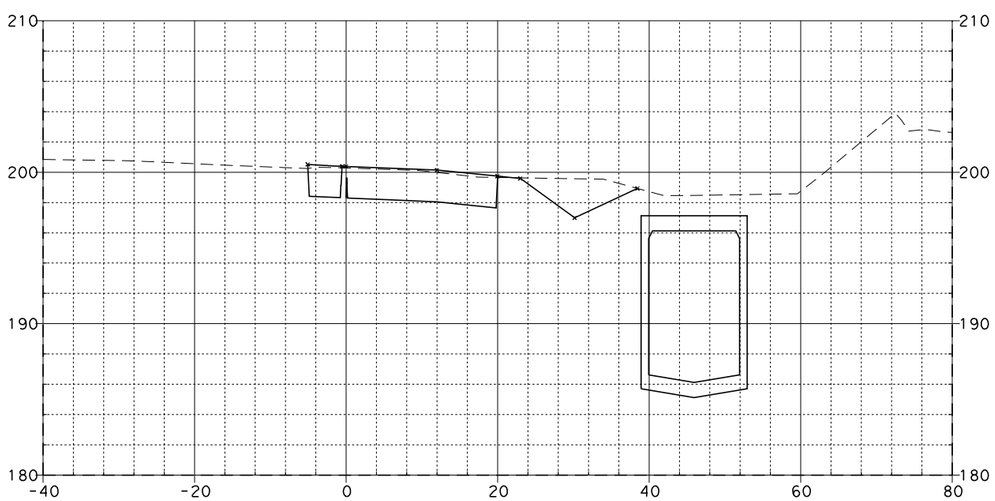

97+00.00

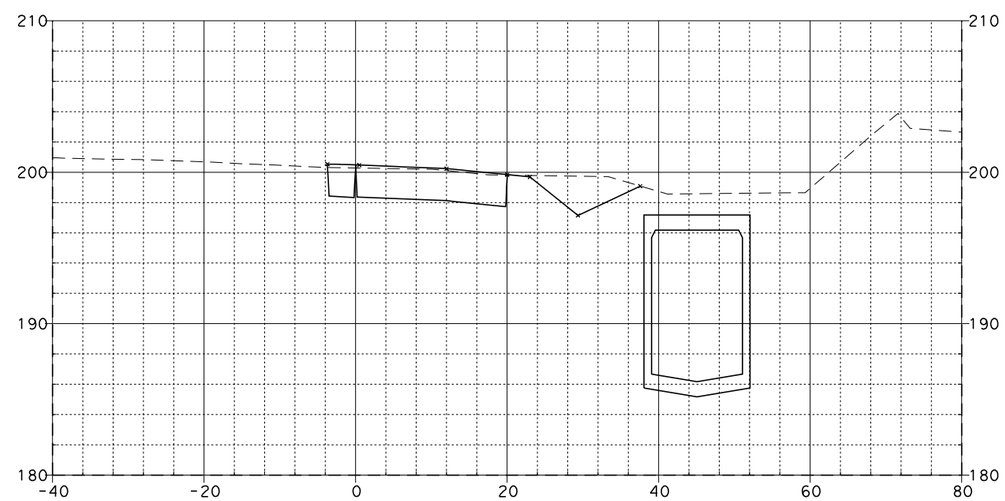

97+50.00

LINCOLN ON-RAMP "E-6"

08\03\11

Dist	COUNTY	ROUTE	POST MILES TOTAL PROJECT	SHEET NO.	TOTAL SHEETS
12	Ora	57	12.2/15.2		

FOR EARTHWORK DEVELOPMENT ONLY

...\d0282599\Cross_Sections.dgn

EA 0F0401

SCALE: Horiz 1"=20'
Vert 1"=10'

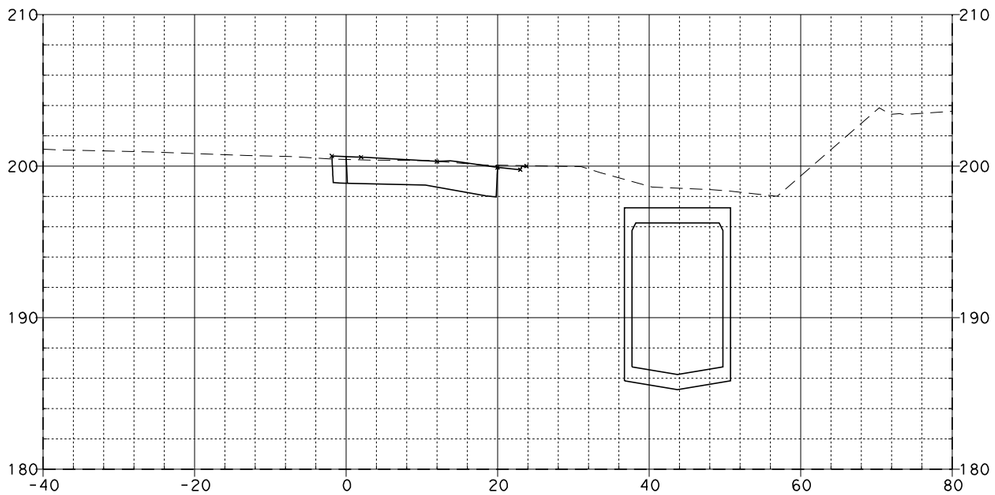

98+25.00

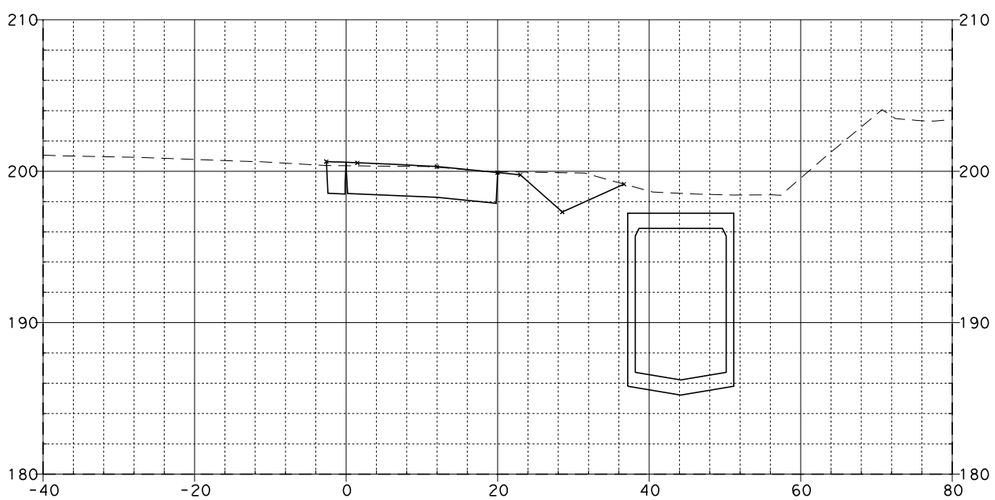

98+00.00

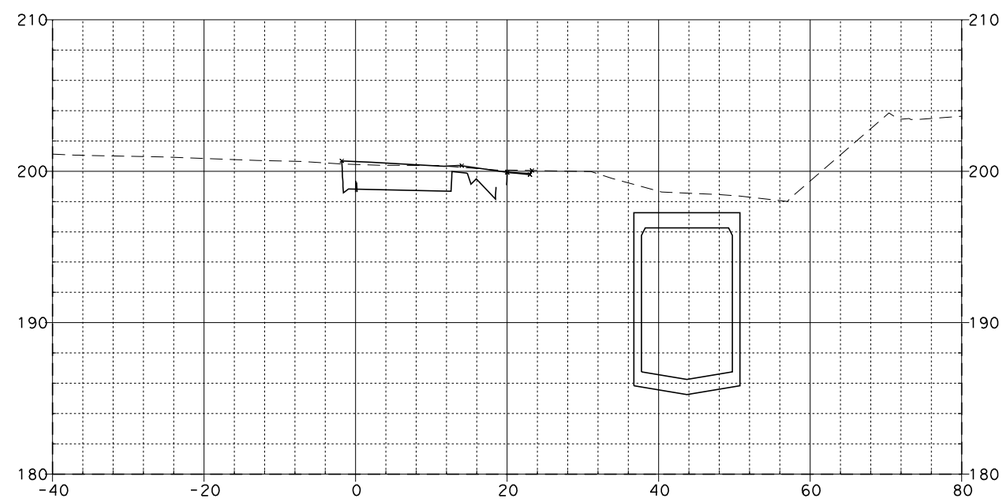

98+26.00

LINCOLN ON-RAMP "E-6"

08\03\11

Dist	COUNTY	ROUTE	POST MILES TOTAL PROJECT	SHEET NO.	TOTAL SHEETS
12	Ora	57	12.2/15.2		

FOR EARTHWORK DEVELOPMENT ONLY

...\d0282599\Cross_Sections.dgn