Dist	COUNTY	ROUTE	POST MILES TOTAL PROJECT	SHEET No.	TOTAL SHEETS
12	Ora	57	16.2/18.6	601	960

Mark J. Esposito 7/15/09
REGISTERED CIVIL ENGINEER DATE

12-14-09
PLANS APPROVAL DATE

REGISTERED PROFESSIONAL ENGINEER MARK J. ESPOSITO No. 69921 Exp. 9-30-10 CIVIL STATE OF CALIFORNIA

THE STATE OF CALIFORNIA OR ITS OFFICERS OR AGENTS SHALL NOT BE RESPONSIBLE FOR THE ACCURACY OR COMPLETENESS OF SCANNED COPIES OF THIS PLAN SHEET.

RBF CONSULTING
14275 ALTON PKWY
IRVINE, CA 92618

OCTA
550 S. MAIN STREET
ORANGE, CA 92863

CONDUCTOR AND CONDUIT SCHEDULE

AWG OR CABLE	CONDUCTOR RUN	1	2	3	4
#8	GROUND		1	1	
#8	CCTV CONTROLLER CABINET	2		2	2
#6	HIGH MAST POLE MOTOR	2	2		2
CCTV MULTI-CONDUCTOR CABLE			1	1	
CONDUIT SIZE		2"	3"	2-3"	2"E

ALL CONDUITS, CONDUCTORS, AND CABLES ARE NEW EXCEPT AS NOTED.
E=EXISTING TO REMAIN.

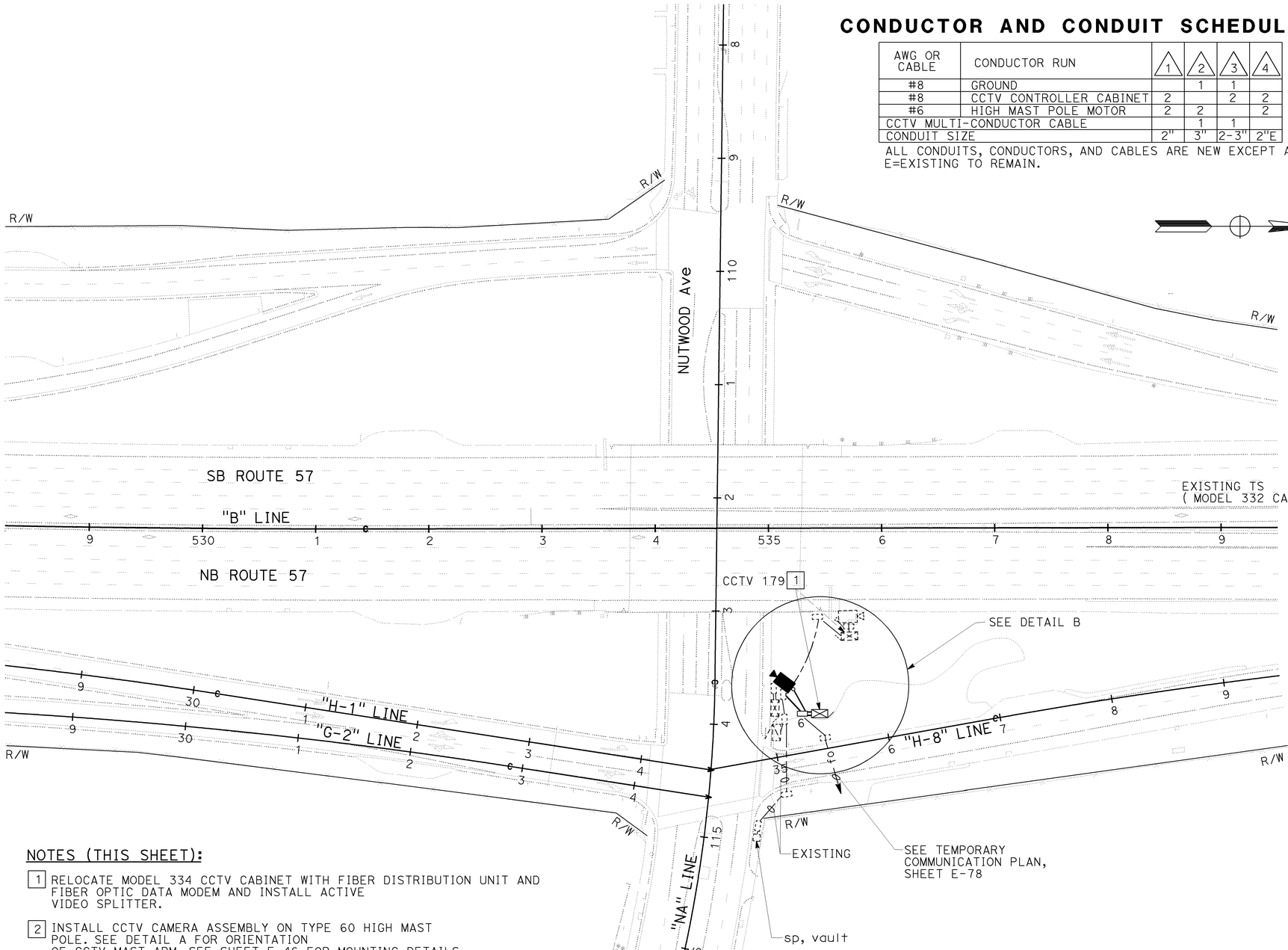

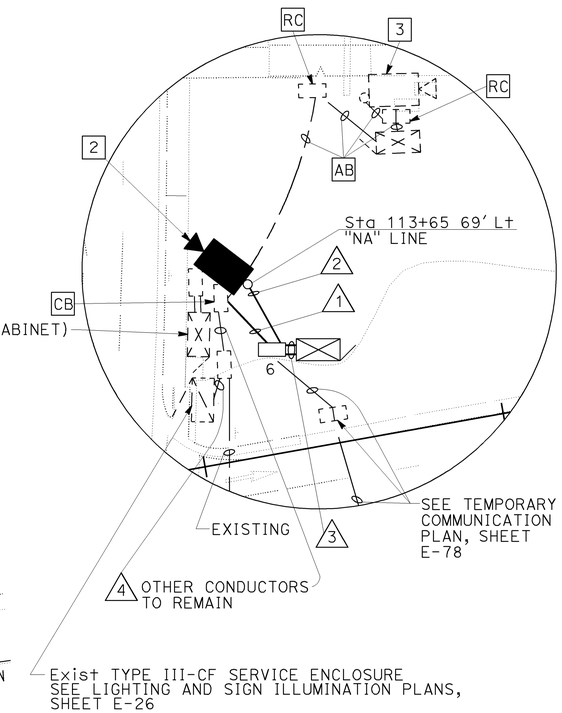

DETAIL B
NO SCALE

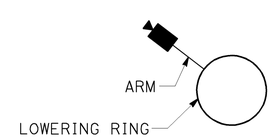

DETAIL A
ORIENTATION OF CCTV MAST ARM
NO SCALE

NOTES (THIS SHEET):

1. RELOCATE MODEL 334 CCTV CABINET WITH FIBER DISTRIBUTION UNIT AND FIBER OPTIC DATA MODEM AND INSTALL ACTIVE VIDEO SPLITTER.
2. INSTALL CCTV CAMERA ASSEMBLY ON TYPE 60 HIGH MAST POLE. SEE DETAIL A FOR ORIENTATION OF CCTV MAST ARM. SEE SHEET E-46 FOR MOUNTING DETAILS.
3. RS CCTV CAMERA ASSEMBLY AND TYPE 45 POLE. REMOVE EXISTING FOUNDATION.
4. CCTV SYSTEM SHALL BE IN OPERATION AT ALL TIMES.
5. UNLESS OTHERWISE NOTED, PULL BOXES, FOUNDATIONS, AND CONDUITS SHALL BE PLACED AT ULTIMATE GRADE AND LOCATIONS.
6. FOR ACCURATE RIGHT OF WAY DATA, CONTACT RIGHT OF WAY ENGINEERING AT THE DISTRICT OFFICE.

THIS PLAN IS ACCURATE FOR ELECTRICAL WORK ONLY.

CLOSED CIRCUIT TELEVISION SYSTEM (LOCATION 3)
STAGE 1A

SCALE: 1" = 50'

E-41

STATE OF CALIFORNIA - DEPARTMENT OF TRANSPORTATION
Caltrans
CONSULTANT FUNCTIONAL SUPERVISOR: CARLOS A. ORTIZ
CALCULATED-DESIGNED BY: JESSICA PARRENO
CHECKED BY: ARMANDO SOLIS
REVISED BY
DATE REVISED

H:\pdata\10105878\Admin\submittals\2009-06-29 FINAL Submittal\100% ELECTRONIC SUBMITTAL - MERGED\21-DEC-2009\21-DEC-2009\Traffic\c0F031ua041.dgn

LAST REVISION 08-01-08
DATE PLOTTED => 21-DEC-2009
TIME PLOTTED => 12:56

Dist	COUNTY	ROUTE	POST MILES TOTAL PROJECT	SHEET No.	TOTAL SHEETS
12	Ora	57	16.2/18.6	602	960

Mark J. Esposito 7/15/09
REGISTERED CIVIL ENGINEER DATE

12-14-09
PLANS APPROVAL DATE

REGISTERED PROFESSIONAL ENGINEER MARK J. ESPOSITO No. 69921 Exp. 9-30-10 CIVIL STATE OF CALIFORNIA

THE STATE OF CALIFORNIA OR ITS OFFICERS OR AGENTS SHALL NOT BE RESPONSIBLE FOR THE ACCURACY OR COMPLETENESS OF SCANNED COPIES OF THIS PLAN SHEET.

RBF CONSULTING
14275 ALTON PKWY
IRVINE, CA 92618

OCTA
550 S. MAIN STREET
ORANGE, CA 92863

NOTE:
FOR COMPLETE RIGHT OF WAY AND ACCURATE ACCESS DATA, SEE RIGHT OF WAY RECORD MAPS AT DISTRICT OFFICE.

CONDUCTOR AND CONDUIT SCHEDULE

AWG OR CABLE	CONDUCTOR RUN	1	2	3
#8	GROUND		1E	1E
#8	CCTV CONTROLLER CABINET	2E		2E
#6	HIGH MAST POLE MOTOR	2E	2E	
CCTV MULTI-CONDUCTOR CABLE			1E	1E
CONDUIT SIZE		2"E	3"E	2-3"E

E=EXISTING TO REMAIN (PROTECT IN PLACE).

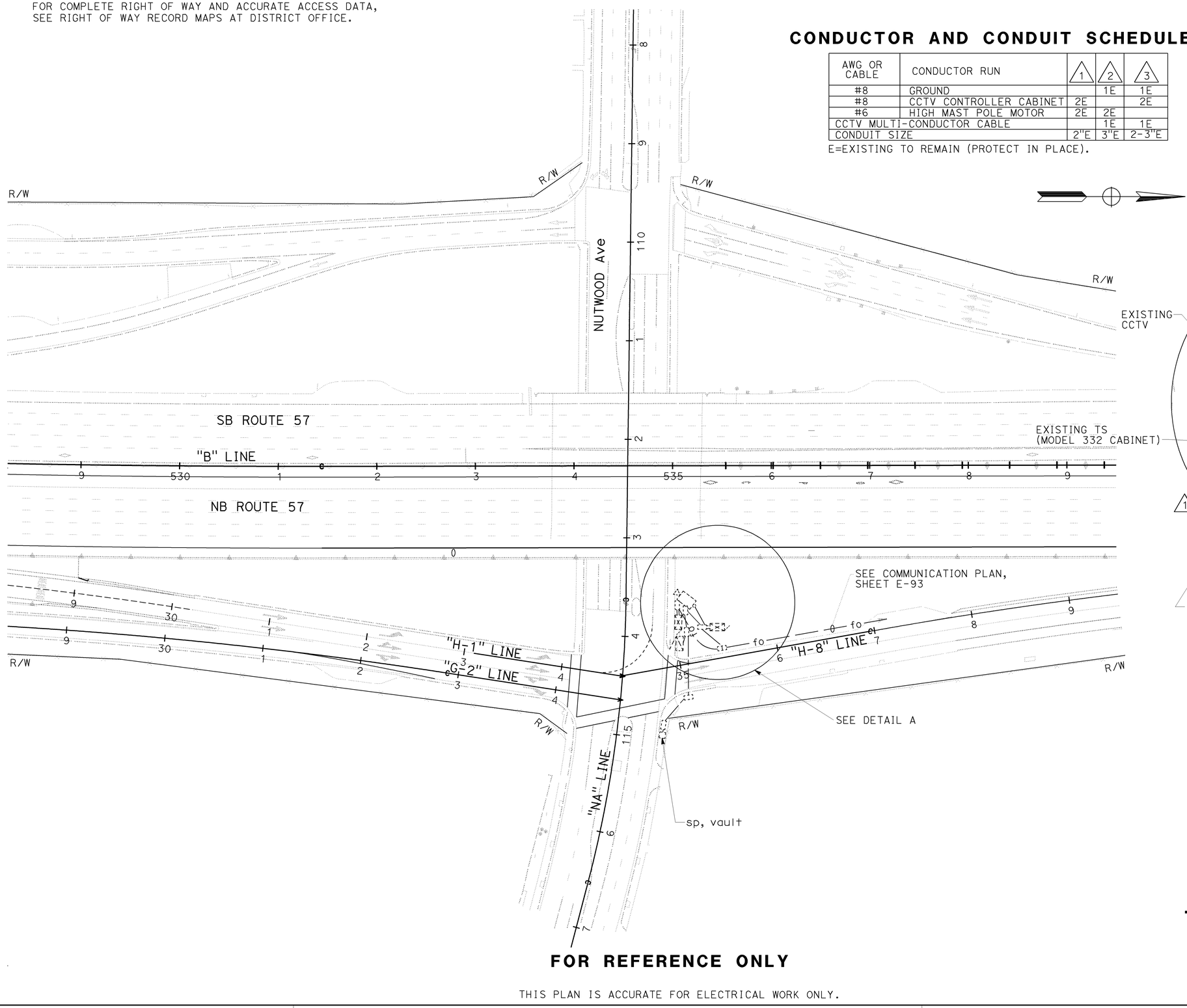

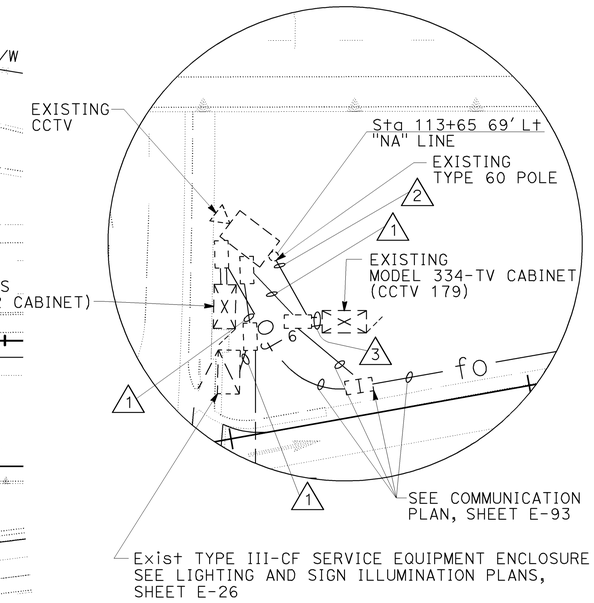

DETAIL A
NO SCALE

FOR REFERENCE ONLY

THIS PLAN IS ACCURATE FOR ELECTRICAL WORK ONLY.

CLOSED CIRCUIT TELEVISION SYSTEM (LOCATION 3)

SCALE: 1" = 50'

E-42

STATE OF CALIFORNIA - DEPARTMENT OF TRANSPORTATION
Caltrans
CONSULTANT FUNCTIONAL SUPERVISOR: CARLOS A. ORTIZ
CALCULATED-DESIGNED BY: ARMANDO SOLIS
CHECKED BY
REVISED BY: JESSICA PARRENO
DATE REVISED
H:\pdata\10105878\Admin\submittals\2009-06-29 FINAL Submittal\100% ELECTRONIC SUBMITTAL - MERGED1FDES2009BY1.dgn
c0F031ua042.dgn

LAST REVISION 08-01-08
DATE PLOTTED => 21-DEC-2009
TIME PLOTTED => 12:56

BORDER LAST REVISED 4/11/2008
RELATIVE BORDER SCALE IS IN INCHES 0 1 2 3
USERNAME => trlenard
DGN FILE => c0F031ua042.dgn
CU 12220
EA 0F0311

Dist	COUNTY	ROUTE	POST MILES TOTAL PROJECT	SHEET No.	TOTAL SHEETS
12	Ora	57	16.2/18.6	603	960

Mark J. Esposito 7/15/09
REGISTERED CIVIL ENGINEER DATE

12-14-09
PLANS APPROVAL DATE

REGISTERED PROFESSIONAL ENGINEER
MARK J. ESPOSITO
No. 69921
Exp. 9-30-10
CIVIL
STATE OF CALIFORNIA

THE STATE OF CALIFORNIA OR ITS OFFICERS OR AGENTS SHALL NOT BE RESPONSIBLE FOR THE ACCURACY OR COMPLETENESS OF SCANNED COPIES OF THIS PLAN SHEET.

RBF CONSULTING
14275 ALTON PKWY
IRVINE, CA 92618

OCTA
550 S. MAIN STREET
ORANGE, CA 92863

CONDUCTOR AND CONDUIT SCHEDULE

AWG OR CABLE	CONDUCTOR RUN	1	2	3	4
#8	GROUND	1	1	1	1E
#8	CCTV CONTROLLER CABINET		2	2	2E
CCTV MULTI-CONDUCTOR CABLE		1	1		
CONDUIT SIZE		3"	2-3"	2"	2"E

ALL CONDUITS, CONDUCTORS, AND CABLES ARE NEW EXCEPT AS NOTED.

E=EXISTING TO REMAIN.

NOTES (THIS SHEET):

1. RELOCATE MODEL 334 CCTV CABINET WITH FIBER DISTRIBUTION UNIT AND FIBER OPTIC DATA MODEM AND INSTALL ACTIVE VIDEO SPLITTER.
2. INSTALL CCTV CAMERA ASSEMBLY ON TYPE 45 POLE. SEE SHEET E-46 FOR MOUNTING DETAILS.
3. RC EXISTING CCTV CAMERA ASSEMBLY AND TYPE 45 POLE.
4. CCTV SYSTEM SHALL BE IN OPERATION AT ALL TIMES.
5. UNLESS OTHERWISE NOTED, PULL BOXES, FOUNDATIONS, AND CONDUITS SHALL BE PLACED AT ULTIMATE GRADE AND LOCATIONS.
6. FOR ACCURATE RIGHT OF WAY DATA, CONTACT RIGHT OF WAY ENGINEERING AT THE DISTRICT OFFICE.

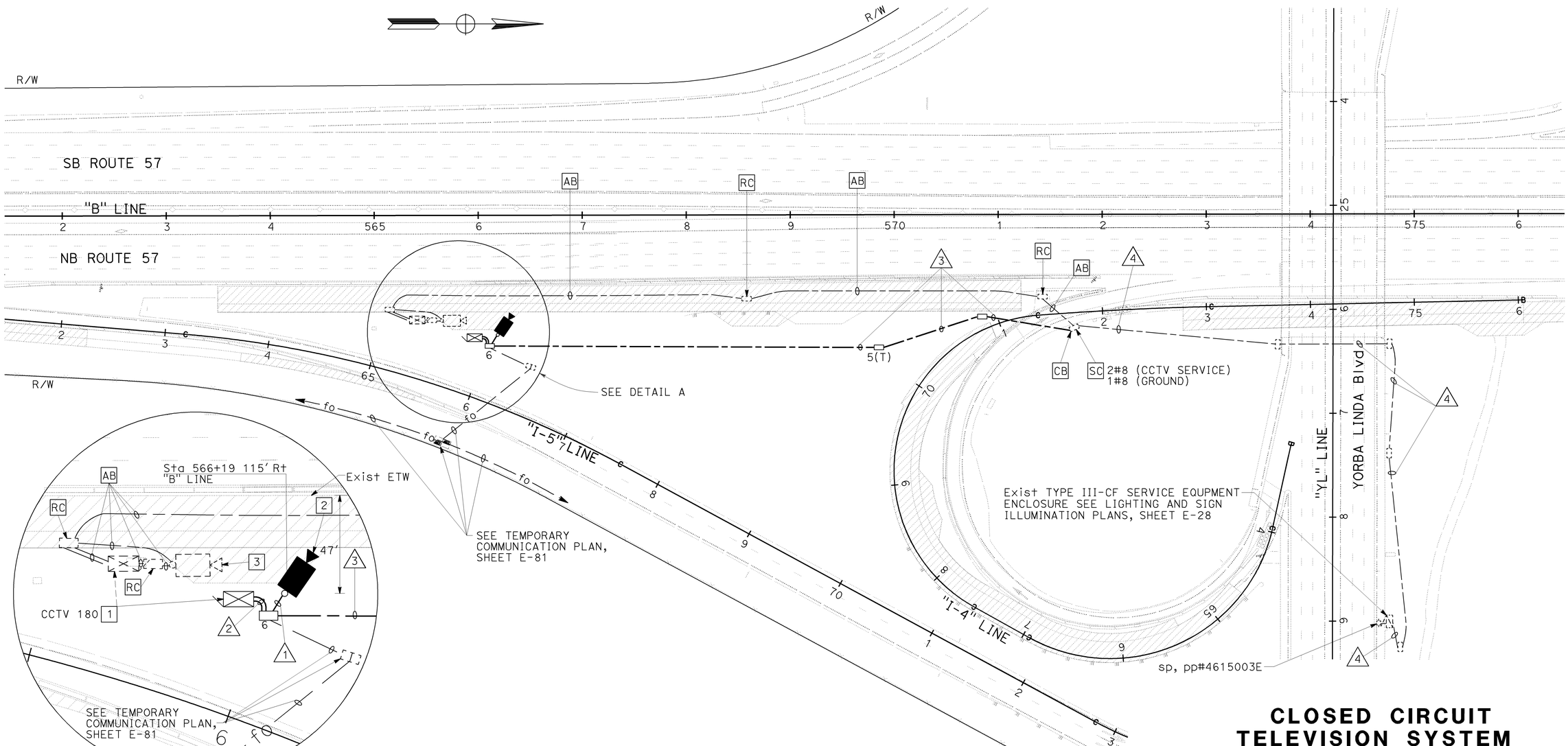

DETAIL A
NO SCALE

CLOSED CIRCUIT TELEVISION SYSTEM (LOCATION 4)

STAGE 1A

SCALE: 1" = 50'

E-43

THIS PLAN IS ACCURATE FOR ELECTRICAL WORK ONLY.

STATE OF CALIFORNIA - DEPARTMENT OF TRANSPORTATION
Caltrans
CONSULTANT FUNCTIONAL SUPERVISOR: CARLOS A. ORTIZ
CALCULATED-DESIGNED BY: JESSICA PARRENO
CHECKED BY: ARMANDO SOLIS
REVISED BY
DATE REVISED

LAST REVISION DATE PLOTTED => 21-DEC-2009
TIME PLOTTED => 12:56
08-01-08

BORDER LAST REVISED 4/11/2008
RELATIVE BORDER SCALE IS IN INCHES 0 1 2 3
USERNAME => trienard
DGN FILE => c0F031ua043.dgn
CU 12220
EA 0F0311

Dist	COUNTY	ROUTE	POST MILES TOTAL PROJECT	SHEET No.	TOTAL SHEETS
12	Ora	57	16.2/18.6	604	960

Mark J. Esposito 7/15/09
REGISTERED CIVIL ENGINEER DATE

MARK J. ESPOSITO No. 69921 Exp. 9-30-10 CIVIL — REGISTERED PROFESSIONAL ENGINEER — STATE OF CALIFORNIA

12-14-09
PLANS APPROVAL DATE

THE STATE OF CALIFORNIA OR ITS OFFICERS OR AGENTS SHALL NOT BE RESPONSIBLE FOR THE ACCURACY OR COMPLETENESS OF SCANNED COPIES OF THIS PLAN SHEET.

RBF CONSULTING
14275 ALTON PKWY
IRVINE, CA 92618

OCTA
550 S. MAIN STREET
ORANGE, CA 92863

NOTE:

1. FOR ACCURATE RIGHT OF WAY DATA, CONTACT RIGHT OF WAY ENGINEERING AT THE DISTRICT OFFICE.

CONDUCTOR AND CONDUIT SCHEDULE

AWG OR CABLE	CONDUCTOR RUN	1	2	3	4▲
#8	GROUND	1E	1E	1E	1
#8	CCTV CONTROLLER CABINET	2E		2E	2
CCTV MULTI-CONDUCTOR CABLE			1E	1E	
CONDUIT SIZE		2"E	3"E	2-3"E	2"

E=EXISTING TO REMAIN.
▲ INSTALL ULTIMATE CONDUIT AND CONDUCTORS.

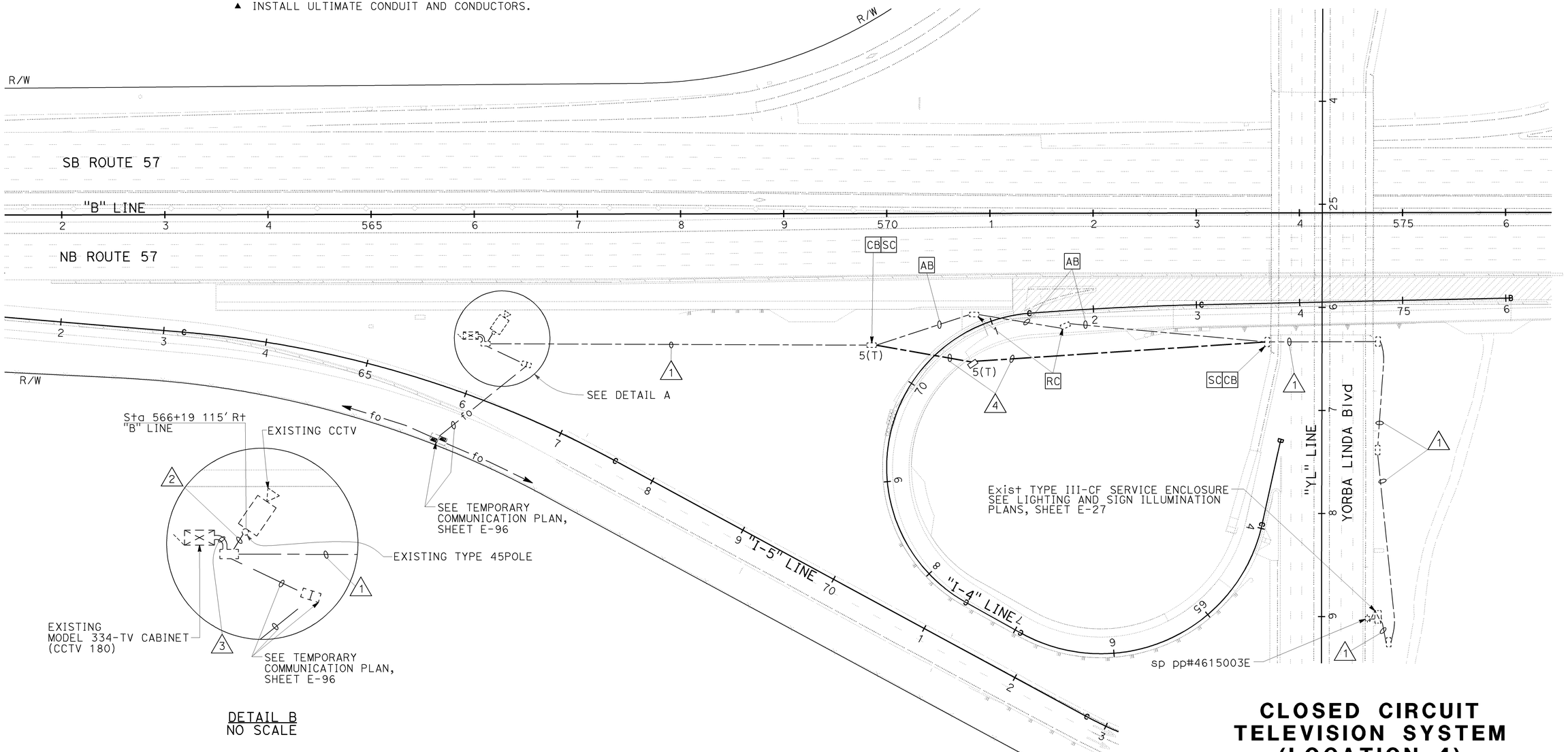

DETAIL B
NO SCALE

CLOSED CIRCUIT TELEVISION SYSTEM (LOCATION 4)

STAGE 1C

SCALE: 1" = 50'

E-44

THIS PLAN IS ACCURATE FOR ELECTRICAL WORK ONLY.

REVISED BY | DATE REVISED
CALCULATED-DESIGNED BY: JESSICA PARRENO
CHECKED BY: ARMANDO SOLIS
CONSULTANT FUNCTIONAL SUPERVISOR: CARLOS A. ORTIZ
STATE OF CALIFORNIA - DEPARTMENT OF TRANSPORTATION
Caltrans

LAST REVISION | DATE PLOTTED => 21-DEC-2009
08-01-08 | TIME PLOTTED => 12:56

BORDER LAST REVISED 4/11/2008
RELATIVE BORDER SCALE IS IN INCHES 0 1 2 3
USERNAME => trienard
DGN FILE => c0F031ua044.dgn
CU 12220
EA 0F0311

NOTE:

FOR ACCURATE RIGHT OF WAY DATA, CONTACT RIGHT OF WAY ENGINEERING AT THE DISTRICT OFFICE.

CONDUCTOR AND CONDUIT SCHEDULE

AWG OR CABLE	CONDUCTOR RUN	1	2	3
#8	GROUND	1E	1E	1E
#8	CCTV CONTROLLER CABINET	2E		2E
CCTV MULTI-CONDUCTOR CABLE			1E	1E
CONDUIT SIZE		2"E	3"E	2-3"E

E=EXISTING TO REMAIN.

Dist	COUNTY	ROUTE	POST MILES TOTAL PROJECT	SHEET No.	TOTAL SHEETS
12	Ora	57	16.2/18.6	605	960

Mark J. Esposito 7/15/09
REGISTERED CIVIL ENGINEER DATE

MARK J. ESPOSITO No. 69921 Exp. 9-30-10 CIVIL — REGISTERED PROFESSIONAL ENGINEER — STATE OF CALIFORNIA

12-14-09
PLANS APPROVAL DATE

THE STATE OF CALIFORNIA OR ITS OFFICERS OR AGENTS SHALL NOT BE RESPONSIBLE FOR THE ACCURACY OR COMPLETENESS OF SCANNED COPIES OF THIS PLAN SHEET.

RBF CONSULTING
14275 ALTON PKWY
IRVINE, CA 92618

OCTA
550 S. MAIN STREET
ORANGE, CA 92863

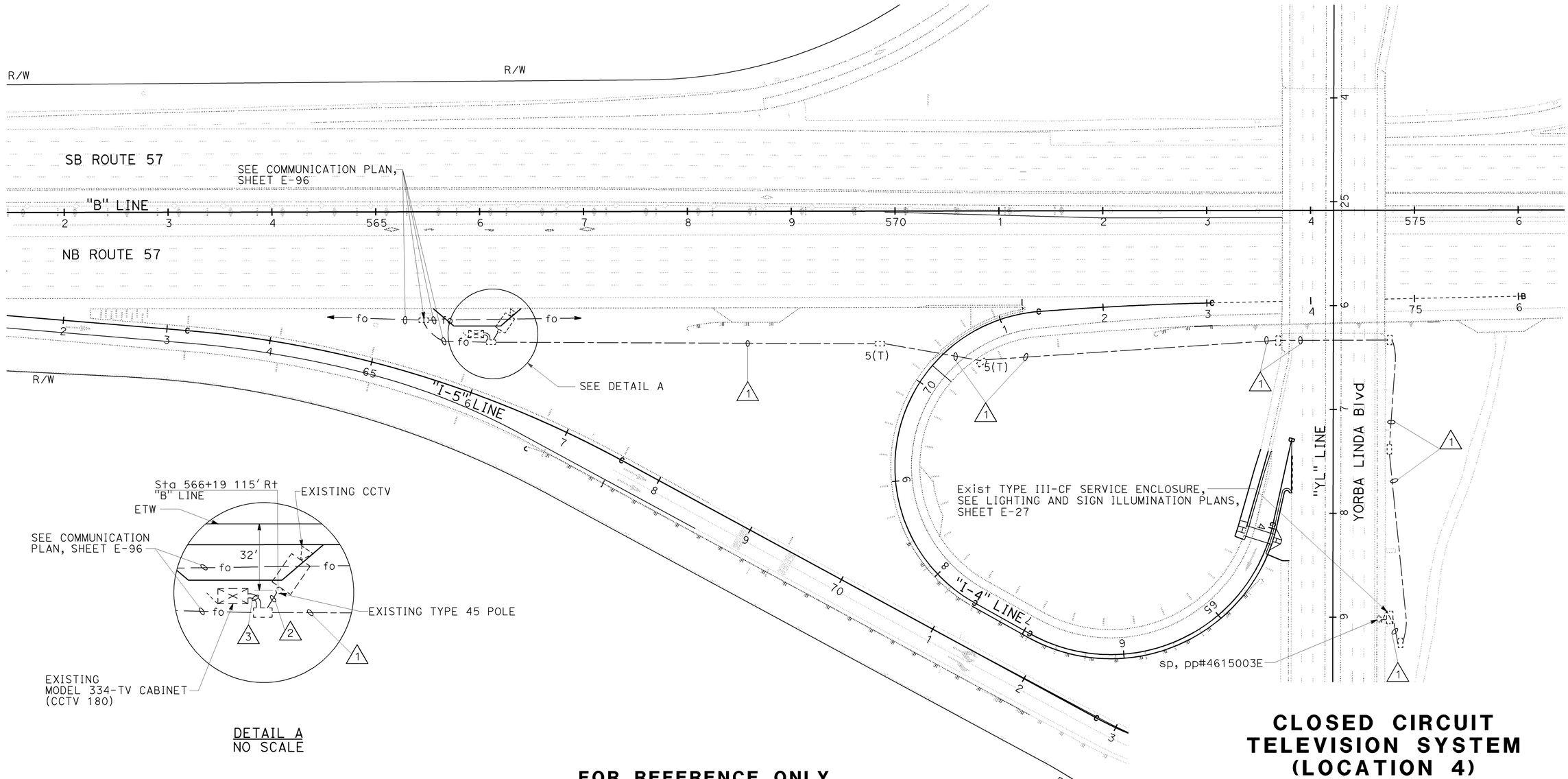

DETAIL A
NO SCALE

FOR REFERENCE ONLY

CLOSED CIRCUIT TELEVISION SYSTEM (LOCATION 4)

SCALE: 1" = 50'

E-45

THIS PLAN IS ACCURATE FOR ELECTRICAL WORK ONLY.

STATE OF CALIFORNIA - DEPARTMENT OF TRANSPORTATION
Caltrans

CONSULTANT FUNCTIONAL SUPERVISOR: CARLOS A. ORTIZ
CALCULATED-DESIGNED BY: JESSICA PARRENO
CHECKED BY: ARMANDO SOLIS
REVISED BY
DATE REVISED

H:\pdata\10105878\Admin\submittals\2009-06-29 FINAL Submittal\100% ELECTRONIC SUBMITTAL - MERGED\FDEES2008\YA7\traffic\c0F031ua045.dgn

LAST REVISION DATE PLOTTED => 21-DEC-2009
TIME PLOTTED => 12:56

BORDER LAST REVISED 4/11/2008
RELATIVE BORDER SCALE IS IN INCHES 0 1 2 3
USERNAME => trienard
DGN FILE => c0F031ua045.dgn
CU 12220
EA 0F0311

Dist	COUNTY	ROUTE	POST MILES TOTAL PROJECT	SHEET No.	TOTAL SHEETS
12	Ora	57	16.2/18.6	606	960

Mark J. Esposito 12/3/09
REGISTERED CIVIL ENGINEER DATE

12-14-09
PLANS APPROVAL DATE

REGISTERED PROFESSIONAL ENGINEER
MARK J. ESPOSITO
No. 69921
Exp. 9-30-10
CIVIL
STATE OF CALIFORNIA

THE STATE OF CALIFORNIA OR ITS OFFICERS OR AGENTS SHALL NOT BE RESPONSIBLE FOR THE ACCURACY OR COMPLETENESS OF SCANNED COPIES OF THIS PLAN SHEET.

RBF CONSULTING
14275 ALTON PKWY
IRVINE, CA 92618

OCTA
550 S. MAIN STREET
ORANGE, CA 92863

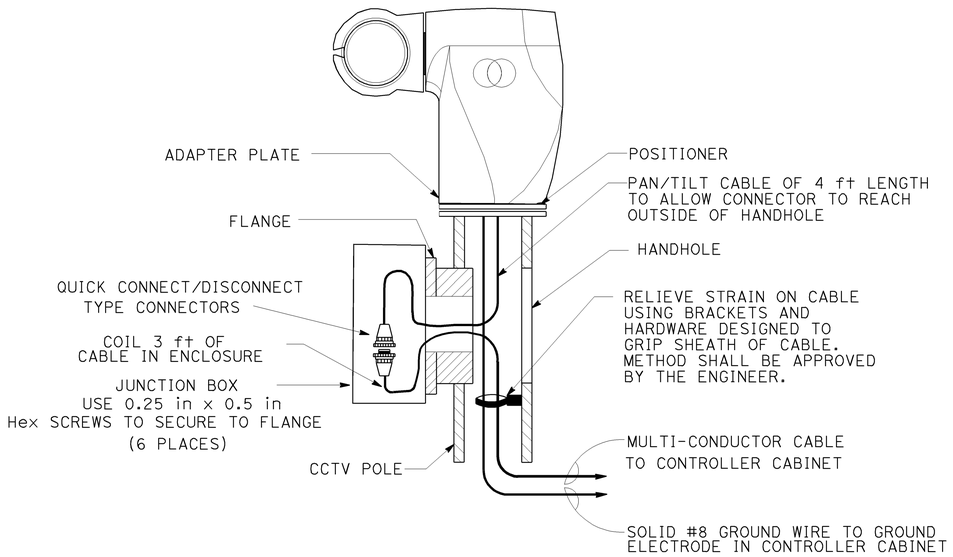

CCTV CAMERA ASSEMBLY MOUNTING DETAIL

FOR CCTV 45 POLE

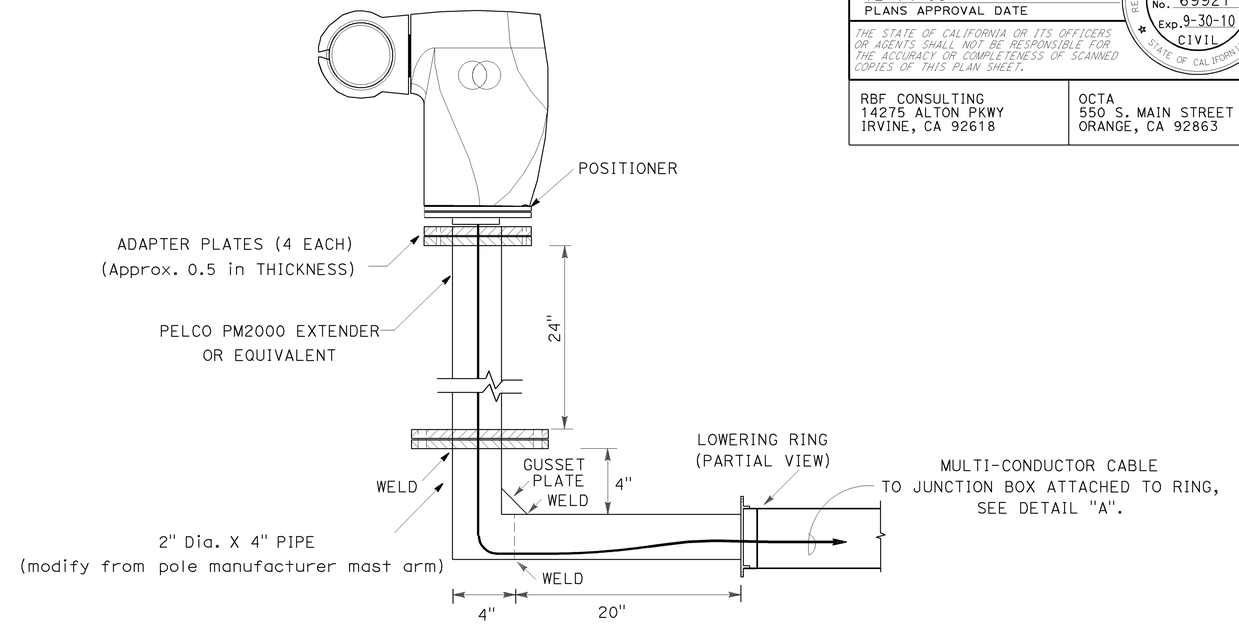

CCTV CAMERA ASSEMBLY
MOUNTING DETAIL

FOR CCTV 60 POLE

NOTE: USE 1/2-INCH HS STAINLESS STEEL BOLTS AND NUTS TO SECURE MOUNTING ARM AND ADAPTER PLATE TO LOWERING RING

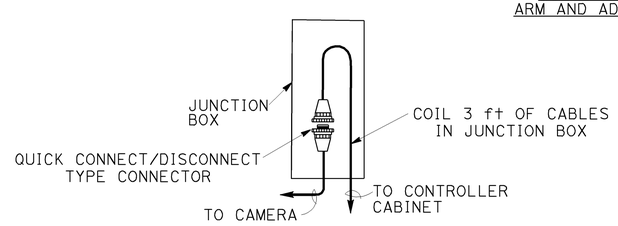

DETAIL "A"
NO SCALE

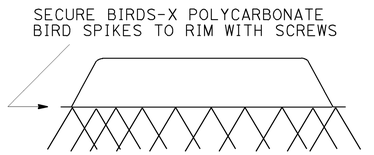

ALUMINUM COVER FOR RING ASSEMBLY
FOR HIGH MAST POLE WITH BIRD SPIKES

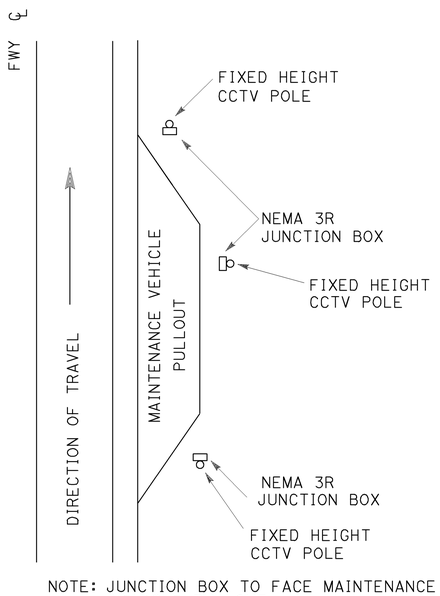

NOTE: JUNCTION BOX TO FACE MAINTENANCE VEHICLE PULLOUT

ORIENTATION OF JUNCTION BOX RELATIVE TO MAINTENANCE VEHICLE PULLOUT

NO SCALE

CLOSED CIRCUIT TELEVISION SYSTEM

(DETAIL)

NO SCALE

THIS PLAN IS ACCURATE FOR ELECTRICAL WORK ONLY.

NTS NOT TO SCALE

E-46

STATE OF CALIFORNIA - DEPARTMENT OF TRANSPORTATION
Caltrans
CONSULTANT FUNCTIONAL SUPERVISOR: CARLOS A. ORTIZ
CALCULATED-DESIGNED BY: JESSICA PARRENO
CHECKED BY: ARMANDO SOLIS
REVISED BY: JP
DATE REVISED: 12/03/09

H:\pdata\10105878\Admin\submittals\2009-07-15 FINAL Electronic-Only Submittal\DGN\c0F031ua046.dgn
Last Saved: 12/3/2009 3:12:56 PM
Plotted: 21-DEC-2009 12:56

LAST REVISION 08-01-08 | DATE PLOTTED => 21-DEC-2009 | TIME PLOTTED => 12:56

BORDER LAST REVISED 4/11/2008
RELATIVE BORDER SCALE IS IN INCHES 0 1 2 3
USERNAME => trienard
DGN FILE => c0F031ua046.dgn
CU 12220
EA 0F0311

Dist	COUNTY	ROUTE	POST MILES TOTAL PROJECT	SHEET No.	TOTAL SHEETS
12	Ora	57	16.2/18.6	607	960

Mark J. Esposito 7/15/09
REGISTERED CIVIL ENGINEER DATE

MARK J. ESPOSITO No. 69921 Exp. 9-30-10 CIVIL — REGISTERED PROFESSIONAL ENGINEER — STATE OF CALIFORNIA

12-14-09
PLANS APPROVAL DATE

THE STATE OF CALIFORNIA OR ITS OFFICERS OR AGENTS SHALL NOT BE RESPONSIBLE FOR THE ACCURACY OR COMPLETENESS OF SCANNED COPIES OF THIS PLAN SHEET.

RBF CONSULTING
14275 ALTON PKWY
IRVINE, CA 92618

OCTA
550 S. MAIN STREET
ORANGE, CA 92863

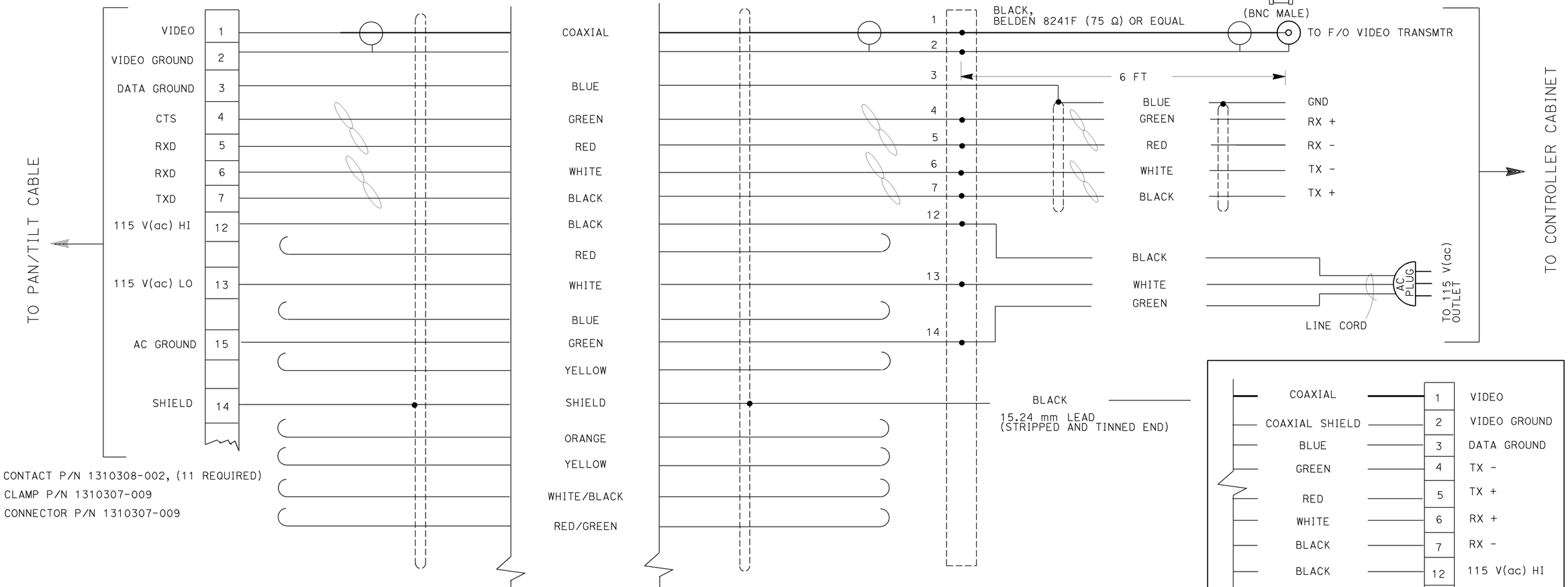

CONTACT P/N 1310308-002, (11 REQUIRED)
CLAMP P/N 1310307-009
CONNECTOR P/N 1310307-009

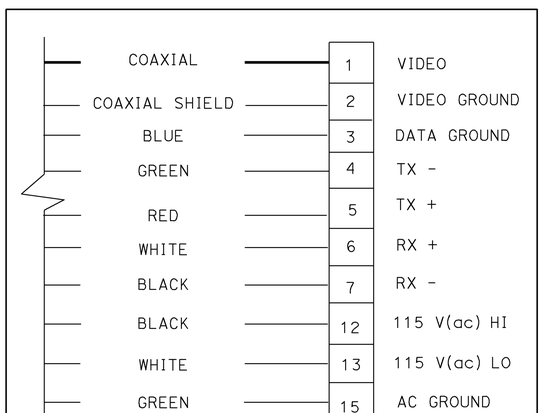

CLAMP 1310307-103
AMP CONNECTOR 1310306-010
CONTACTS 1310308-001

ALTERNATE TERMINATION FOR MULTI-CONDUCTOR CABLE AT BASE OF HIGH MAST CCTV POLE

NOTES (THIS SHEET):

1. THE OVERALL CABLE SHIELD AND DRAIN WIRES SHALL BE PIGTAILED SOLDERED TO A MINIMUM 22 AWG BLACK WIRE ON THE CABINET SIDE.
2. EXPOSED SHIELD/SOLDER INTERFACE SHALL BE TAPED OR PROTECTED BY HEAT SHRINK TUBING.
3. THE GREEN GROUND WIRE SHALL BE TERMINATED TO THE CABINET GROUND BUS.
4. THE SHIELD SHALL ONLY BE GROUNDED AT THE CABINET END. DO NOT GROUND THE SHIELD AT THE CAMERA SIDE TO AVOID GROUND LOOPS.
5. ALL UNUSED CONDUCTORS ARE TO BE FOLDED BACK AND SECURELY TAPED. CONDUCTORS AT THE CABINET SIDE SHALL BE PROPERLY PROTECTED AND DRESSED.
6. THE COAXIAL CABLE FOR VIDEO SHALL BE BELDEN 8241F OR EQUAL (75 Ω).
7. THE DATA CONDUCTORS SHALL BE THE 2 PAIR, TWISTED WITH OVERALL SHIELD, 26 AWG (FIXED HEIGHT CCTV) OR 22 AWG (HIGH MAST CCTV).
8. THE POWER CONDUCTORS SHALL BE THE 3-CONDUCTOR, 26 AWG (FIXED HEIGHT CCTV) OR 22 AWG (HIGH MAST CCTV).
9. INSTALL CABLE/CONDUCTOR WITHOUT SPLICES OR BREAK UNLESS OTHERWISE SHOWN.

CLOSED CIRCUIT TELEVISION SYSTEM
(CCTV WIRING SCHEDULE AND PIN-OUT)

NO SCALE

E-46A

REVISED BY	DATE REVISED

CALCULATED-DESIGNED BY: JESSICA PARRENO
CHECKED BY: ARMANDO SOLIS
CONSULTANT FUNCTIONAL SUPERVISOR: CARLOS A. ORTIZ
STATE OF CALIFORNIA - DEPARTMENT OF TRANSPORTATION
Caltrans

H:\pdata\10105878\CADD\TransPW\Div\Electrical\CCTV\MERGED\c0F031ua046A.dgn trlenard 21-DEC-2009 12:56

LAST REVISION DATE PLOTTED => 21-DEC-2009
TIME PLOTTED => 12:56
08-01-08

BORDER LAST REVISED 4/11/2008

RELATIVE BORDER SCALE IS IN INCHES 0 1 2 3

USERNAME => trlenard
DGN FILE => c0F031ua046A.dgn

CU 12220

EA 0F0311

Dist	COUNTY	ROUTE	POST MILES TOTAL PROJECT	SHEET No.	TOTAL SHEETS
12	Ora	57	16.2/18.6	608	960

REGISTERED CIVIL ENGINEER 7/15/09 DATE

12-14-09
PLANS APPROVAL DATE

REGISTERED PROFESSIONAL ENGINEER ARMANDO SOLIS No. 72012 Exp. 6-30-10 CIVIL STATE OF CALIFORNIA

THE STATE OF CALIFORNIA OR ITS OFFICERS OR AGENTS SHALL NOT BE RESPONSIBLE FOR THE ACCURACY OR COMPLETENESS OF SCANNED COPIES OF THIS PLAN SHEET.

RBF CONSULTING
14275 ALTON PKWY
IRVINE, CA 92618

OCTA
550 S. MAIN STREET
ORANGE, CA 92863

NOTES THIS SHEET:

1. EXISTING TYPE 334 CONTROLLER CABINET WITH MODEL 170 CONTROLLER.
2. EXISTING 120/240 V TYPE III-CF SERVICE EQUIPMENT ENCLOSURE WITH:

   UNMETERED
   15 A 120 V 1P CB (LIGHTING CONTROL)
   30 A 120 V 1P CB (STREET LIGHTS)

   METER A (ID# 12-55-057-0-016.392)
   30 A 120 V 1P CB (TRAFFIC SIGNALS)
   30 A 120 V 1P CB (CCTV)

   METER B (ID# 12-55-057-0-016.393)
   100 A 120 V 2P CB (MAIN)
   30 A 120 V 1P CB (RAMP METER)
   20 A 120 V 1P CB (IRRIGATION)
3. RELOCATE TYPE 1-A STANDARD AND EQUIPMENT TO TEMPORARY LOCATION. FOUNDATION SHALL BE TEMPORARY PER DETAIL A ON SHEET E-61.
4. INSTALL TEMPORARY MICROWAVE VEHICLE DETECTION SYSTEM ON TEMPORARY WOOD POLE (TYPE 2). SEE SHEETS E-62 THROUGH E-63A FOR DETAILS.
5. RC UNUSED CONDUCTORS.
6. INSTALL TEMPORARY MICROWAVE VEHICLE DETECTION SYSTEM TERMINATION ASSEMBLY WITH INPUT FILE, CONTACT CLOSURE CARDS, WIRELESS RADIO EQUIPMENT AND ASSOCIATED HARDWARE AND CABLING IN EXISTING MODEL 334 CABINET.
7. FOR ACCURATE RIGHT OF WAY DATA, CONTACT RIGHT OF WAY ENGINEERING AT THE DISTRICT OFFICE.

CONDUCTOR AND CONDUIT SCHEDULE

AWG OR CABLE	CONDUCTOR RUN	1	2	3	4	5	6	7
#14	RAMP SIGNAL	3	6					6
	METER ON SIGNAL					2	2	2
DLC	QUEUE DETECTOR						2	2
	DEMAND DETECTOR	1	2					2
	PASSAGE DETECTOR	1	2					2
	COUNT DETECTOR				1		1	1
	SURVEILLANCE DETECTOR							
#10	SIGNAL COMMON	1	1					1
#8	SERVICE			2	2		2	2
CONDUIT SIZE		3"	3"	3"	2"	2"	2"	2-3"

ALL CONDUIT AND CONDUCTORS ARE EXISTING UNLESS NOTED OTHERWISE.

ABBREVIATIONS: (FOR SHEETS E-47 TO E-65)

MVDS = MICROWAVE VEHICLE DETECTION SYSTEM
VDS = VEHICLE DETECTION SYSTEM
TS = TRAFFIC SIGNAL

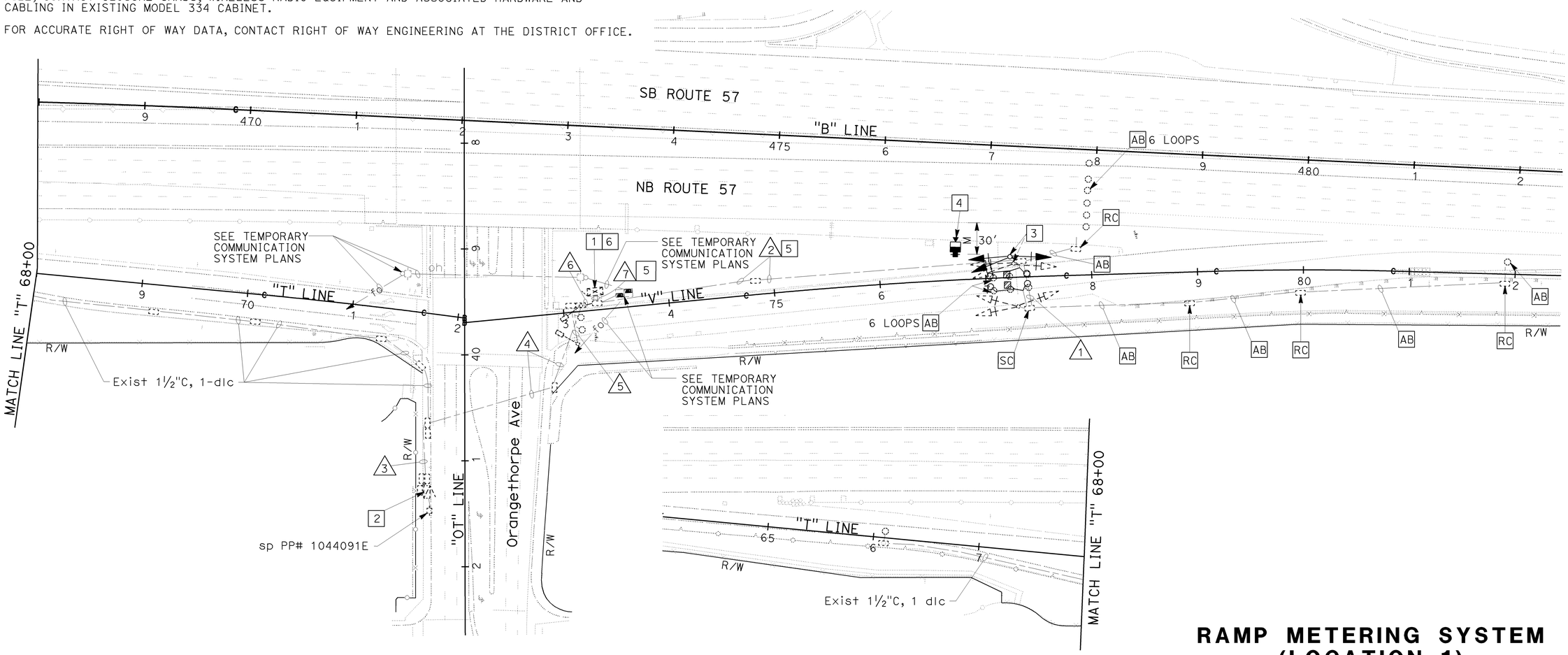

RAMP METERING SYSTEM (LOCATION 1) STAGE 1A

SCALE: 1" = 50'

E-47

THIS PLAN IS ACCURATE FOR ELECTRICAL WORK ONLY.

STATE OF CALIFORNIA - DEPARTMENT OF TRANSPORTATION
Caltrans
CONSULTANT FUNCTIONAL SUPERVISOR: MARK J. ESPOSITO
CALCULATED-DESIGNED BY: GARY TOLMIE
CHECKED BY: ARMANDO SOLIS
REVISED BY
DATE REVISED

H:\pdata\10105878\Admin\submittals\2009-07-15 FINAL Electronic-Only Submittal\DGN\rmd\PLOT File21-DEC-2009\c0f031ua047.dgn

LAST REVISION 08-01-08
DATE PLOTTED => 21-DEC-2009
TIME PLOTTED => 12:56

BORDER LAST REVISED 4/11/2008
RELATIVE BORDER SCALE IS IN INCHES 0 1 2 3
USERNAME => trlenard
DGN FILE => c0F031ua047.dgn
CU 12220
EA 0F0311

Dist	COUNTY	ROUTE	POST MILES TOTAL PROJECT	SHEET No.	TOTAL SHEETS
12	Ora	57	16.2/18.6	609	960

REGISTERED CIVIL ENGINEER 7/15/09 DATE

12-14-09
PLANS APPROVAL DATE

REGISTERED PROFESSIONAL ENGINEER ARMANDO SOLIS No. 72012 Exp. 6-30-10 CIVIL STATE OF CALIFORNIA

THE STATE OF CALIFORNIA OR ITS OFFICERS OR AGENTS SHALL NOT BE RESPONSIBLE FOR THE ACCURACY OR COMPLETENESS OF SCANNED COPIES OF THIS PLAN SHEET.

RBF CONSULTING
14275 ALTON PKWY
IRVINE, CA 92618

OCTA
550 S. MAIN STREET
ORANGE, CA 92863

NOTES THIS SHEET:

1. EXISTING TYPE 334 CONTROLLER CABINET WITH MODEL 170 CONTROLLER AND TEMPORARY MICROWAVE VEHICLE DETECTION SYSTEM EQUIPMENT.
2. EXISTING 120/240 V TYPE III-CF SERVICE EQUIPMENT ENCLOSURE WITH:

   UNMETERED
   15 A 120 V 1P CB (LIGHTING CONTROL)
   30 A 120 V 1P CB (STREET LIGHTS)

   METER A (ID# 12-55-057-0-016.392)
   30 A 120 V 1P CB (TRAFFIC SIGNALS)
   30 A 120 V 1P CB (CCTV)

   METER B (ID# 12-55-057-0-016.393)
   100 A 120 V 2P CB (MAIN)
   30 A 120 V 1P CB (RAMP METER)
   20 A 120 V IP CB (IRRIGATION)
3. RS TYPE 1-A STANDARD AND EQUIPMENT.
4. RC UNUSED CONDUCTORS.
5. FOR ACCURATE RIGHT OF WAY DATA, CONTACT RIGHT OF WAY ENGINEERING AT THE DISTRICT OFFICE.

CONDUCTOR AND CONDUIT SCHEDULE

AWG OR CABLE	CONDUCTOR RUN	1	2	3	4	5
#14	RAMP SIGNAL	3				3
	METER ON SIGNAL			2	2	2
DLC	QUEUE DETECTOR				2	2
	DEMAND DETECTOR	1				1
	PASSAGE DETECTOR	1				1
	COUNT DETECTOR					
	SURVEILLANCE DETECTOR					
#10	SIGNAL COMMON	1				1
#8	SERVICE		2			2
CONDUIT SIZE		3"	3"	2"	2"	2-3"

ALL CONDUIT AND CONDUCTORS ARE EXISTING UNLESS NOTED OTHERWISE.

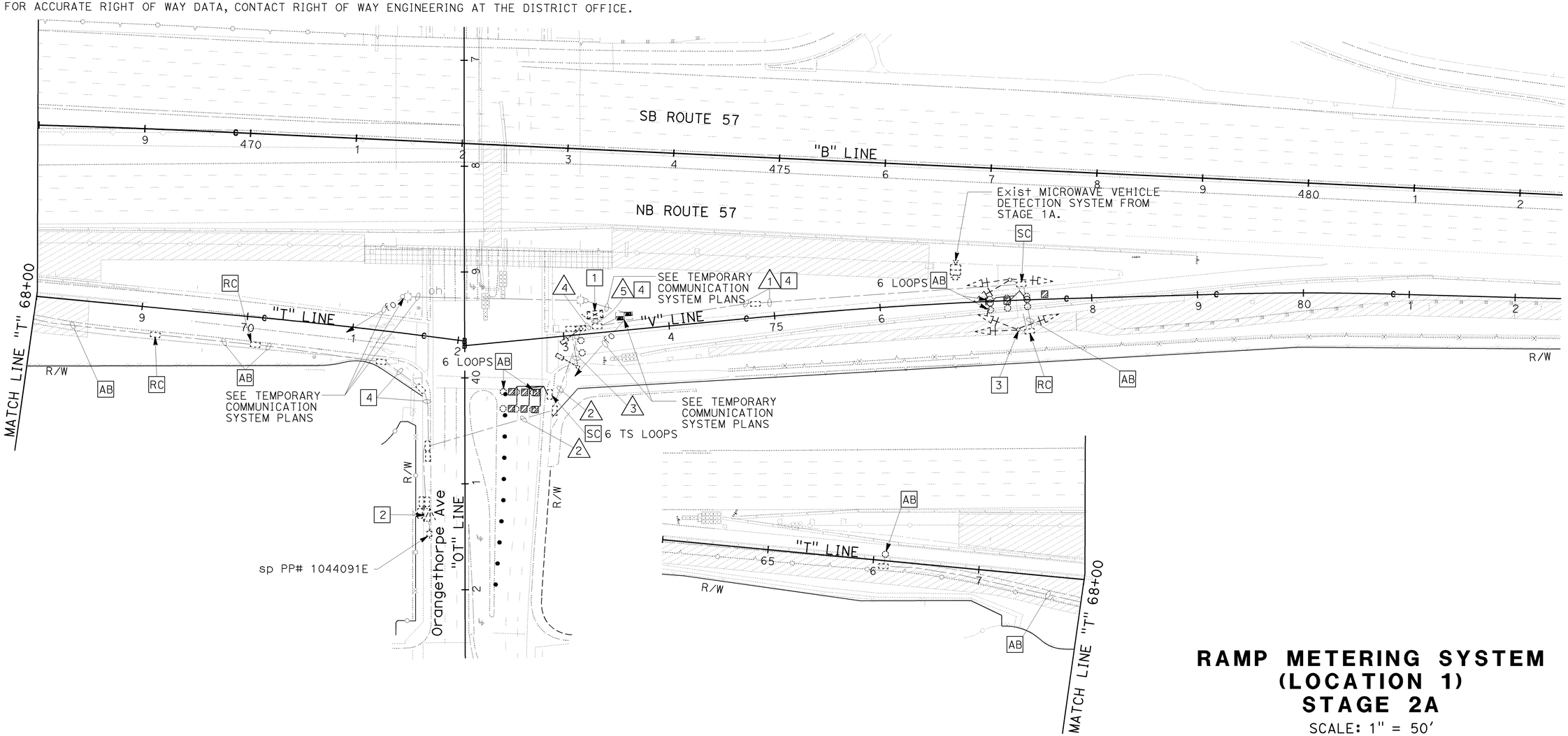

RAMP METERING SYSTEM (LOCATION 1) STAGE 2A

SCALE: 1" = 50'

E-48

THIS PLAN IS ACCURATE FOR ELECTRICAL WORK ONLY.

STATE OF CALIFORNIA - DEPARTMENT OF TRANSPORTATION
Caltrans
CONSULTANT FUNCTIONAL SUPERVISOR: MARK J. ESPOSITO
CALCULATED-DESIGNED BY: GARY TOLMIE
CHECKED BY: ARMANDO SOLIS
REVISED BY
DATE REVISED

H:\pdata\10105878\Admin\submittals\2009-07-15 FINAL Electronic-Only Submittal\DGN\rmdrd PLOT File21-DEC-2009\c0f031ua048.dgn

LAST REVISION 08-01-08
DATE PLOTTED => 21-DEC-2009
TIME PLOTTED => 12:56

Dist	COUNTY	ROUTE	POST MILES TOTAL PROJECT	SHEET No.	TOTAL SHEETS
12	Ora	57	16.2/18.6	610	960

REGISTERED CIVIL ENGINEER — DATE 7/15/09

12-14-09
PLANS APPROVAL DATE

REGISTERED PROFESSIONAL ENGINEER — ARMANDO SOLIS — No. 72012 — Exp. 6-30-10 — CIVIL — STATE OF CALIFORNIA

THE STATE OF CALIFORNIA OR ITS OFFICERS OR AGENTS SHALL NOT BE RESPONSIBLE FOR THE ACCURACY OR COMPLETENESS OF SCANNED COPIES OF THIS PLAN SHEET.

RBF CONSULTING
14275 ALTON PKWY
IRVINE, CA 92618

OCTA
550 S. MAIN STREET
ORANGE, CA 92863

NOTES THIS SHEET:

1. EXISTING TYPE 334 CONTROLLER CABINET WITH MODEL 170 CONTROLLER AND TEMPORARY MICROWAVE VEHICLE DETECTION SYSTEM EQUIPMENT.
2. EXISTING 120/240 V TYPE III-CF SERVICE EQUIPMENT ENCLOSURE WITH:

   UNMETERED
   15 A 120 V 1P CB (LIGHTING CONTROL)
   30 A 120 V 1P CB (STREET LIGHTS)

   METER A (1D# 12-55-057-0-016.392)
   30 A 120 V 1P CB (TRAFFIC SIGNALS)
   30 A 120 V 1P CB (CCTV)

   METER B (ID# 12-55-057-0-016.393)
   100 A 120 V 2P CB (MAIN)
   30 A 120 V 1P CB (RAMP METER)
   20 A 120 V 1P CB (IRRIGATION)

3. RS TYPE 1-A STANDARD AND EQUIPMENT.
4. INSTALL RAMP METER SIGNAL INDICATION ON RETAINING WALL. SEE SHEET E-65 FOR DETAILS.
5. FOR SIGN INFORMATION. REFER TO SIGN PLAN.
6. RELOCATE TEMPORARY MICROWAVE VEHICLE DETECTION SYSTEM FROM STAGE 1A AND INSTALL ON TEMPORARY TYPE CCTV 25 POLE (TYPE 1). SEE SHEETS E-62 THROUGH E-63A FOR DETAILS.
   RC TEMPORARY WOOD POLE.
7. INSTALL CONDUIT ALONG THE BACK OF THE TEMPORARY RAILING (TYPE K) PER DETAIL A ON SHEET E-19.
8. FOR ACCURATE RIGHT OF WAY DATA, CONTACT RIGHT OF WAY ENGINEERING AT THE DISTRICT OFFICE.

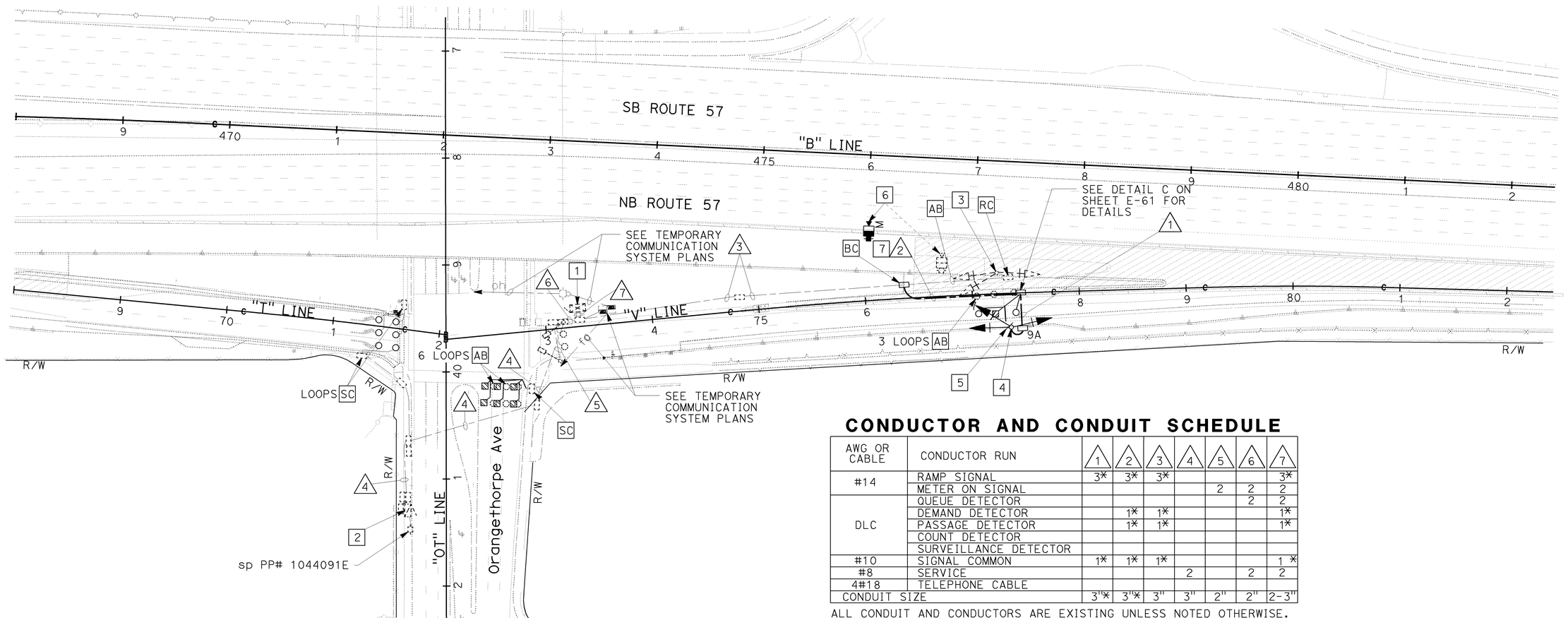

CONDUCTOR AND CONDUIT SCHEDULE

AWG OR CABLE	CONDUCTOR RUN	1	2	3	4	5	6	7
#14	RAMP SIGNAL	3*	3*	3*				3*
	METER ON SIGNAL					2	2	2
DLC	QUEUE DETECTOR						2	2
	DEMAND DETECTOR		1*	1*				1*
	PASSAGE DETECTOR		1*	1*				1*
	COUNT DETECTOR							
	SURVEILLANCE DETECTOR							
#10	SIGNAL COMMON	1*	1*	1*				1 *
#8	SERVICE				2		2	2
4#18	TELEPHONE CABLE							
CONDUIT SIZE		3"*	3"*	3"	3"	2"	2"	2-3"

ALL CONDUIT AND CONDUCTORS ARE EXISTING UNLESS NOTED OTHERWISE.
* NEW CONDUIT OR CONDUCTORS

RAMP METERING SYSTEM (LOCATION 1) STAGE 2B

SCALE: 1" = 50'

E-48A

THIS PLAN IS ACCURATE FOR ELECTRICAL WORK ONLY.

STATE OF CALIFORNIA - DEPARTMENT OF TRANSPORTATION — Caltrans
CONSULTANT FUNCTIONAL SUPERVISOR: MARK J. ESPOSITO
CALCULATED-DESIGNED BY: ARMANDO SOLIS
CHECKED BY: GARY TOLMIE
REVISED BY | DATE REVISED

H:\pdata\10105878\Admin\submittals\2009-07-15 FINAL Electronic-Only Submittal\DGN\radial\LOT File21 2009-07-15 13:58 c0f031ua048A.dgn

LAST REVISION | DATE PLOTTED => 21-DEC-2009
08-01-08 | TIME PLOTTED => 13:58

BORDER LAST REVISED 4/11/2008 | RELATIVE BORDER SCALE IS IN INCHES 0 1 2 3 | USERNAME => trmariak | DGN FILE => c0F031ua048A.dgn | CU 12220 | EA 0F0311

Dist	COUNTY	ROUTE	POST MILES TOTAL PROJECT	SHEET No.	TOTAL SHEETS
12	Ora	57	16.2/18.6	611	960

Armando Solis 7/15/09
REGISTERED CIVIL ENGINEER DATE

12-14-09
PLANS APPROVAL DATE

REGISTERED PROFESSIONAL ENGINEER
ARMANDO SOLIS
No. 72012
Exp. 6-30-10
CIVIL
STATE OF CALIFORNIA

THE STATE OF CALIFORNIA OR ITS OFFICERS OR AGENTS SHALL NOT BE RESPONSIBLE FOR THE ACCURACY OR COMPLETENESS OF SCANNED COPIES OF THIS PLAN SHEET.

RBF CONSULTING
14275 ALTON PKWY
IRVINE, CA 92618

OCTA
550 S. MAIN STREET
ORANGE, CA 92863

NOTES THIS SHEET:

1. EXISTING TYPE 334 CONTROLLER CABINET WITH MODEL 170 CONTROLLER.
2. EXISTING 120/240 V TYPE III-CF SERVICE EQUIPMENT ENCLOSURE WITH:

   UNMETERED
   15 A 120 V 1P CB (P.E.V.)
   30 A 120 V 1P CB (STREET LIGHTS)

   METER A (ID# 12-55-057-0-016.392)
   30 A 120 V 1P CB (TRAFFIC SIGNALS)
   30 A 120 V 1P CB (CCTV)

   METER B (ID# 12-55-057-0-016.393)
   100 A 120 V 2P CB (MAIN)
   30 A 120 V 1P CB (RAMP METER)
   20 A 120 V 1P CB (IRRIGATION)
3. FOR SIGN INFORMATION. REFER TO SIGN PLAN.
4. RC PULL BOX AND INSTALL NEW PULL BOX IN PLACE.
5. RS TEMPORARY MICROWAVE VIDEO DETECTION SYSTEM EQUIPMENT COMPLETE.
6. FOR ACCURATE RIGHT OF WAY DATA, CONTACT RIGHT OF WAY ENGINEERING AT THE DISTRICT OFFICE.

CONDUCTOR AND CONDUIT SCHEDULE

AWG OR CABLE	CONDUCTOR RUN	1	2	3	4	5	6	7	8
#14	RAMP SIGNAL	3*	6*	6*					6*
	METER ON SIGNAL						2	2	2
DLC	QUEUE DETECTOR							2	2
	DEMAND DETECTOR		2*	2*					2*
	PASSAGE DETECTOR		2*	2*					2*
	COUNT DETECTOR	1*	1*	1*		1*		1*	2*
	SURVEILLANCE DETECTOR		14*	14*					14*
#10	SIGNAL COMMON	1*	1*	1*					1*
#8	SERVICE				2	2		2	2
CONDUIT SIZE		3"	2"*	3"	2"	2"	2"	2"	2-3"

ALL CONDUIT AND CONDUCTORS ARE EXISTING UNLESS NOTED OTHERWISE.
* NEW CONDUIT OR CONDUCTORS

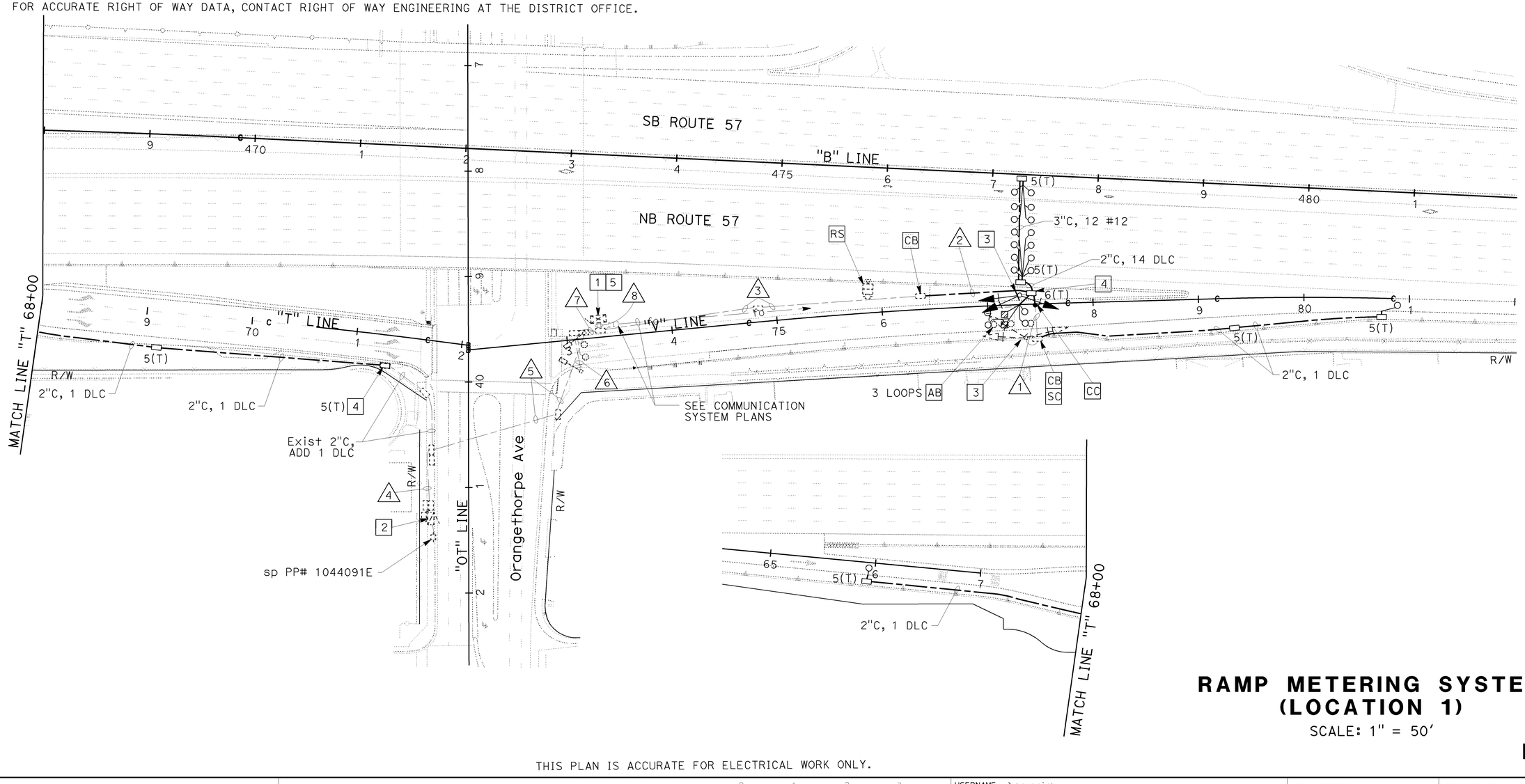

RAMP METERING SYSTEM (LOCATION 1)

SCALE: 1" = 50'

E-49

THIS PLAN IS ACCURATE FOR ELECTRICAL WORK ONLY.

LAST REVISION DATE PLOTTED => 21-DEC-2009
08-01-08 TIME PLOTTED => 13:54

STATE OF CALIFORNIA - DEPARTMENT OF TRANSPORTATION
Caltrans
CONSULTANT FUNCTIONAL SUPERVISOR: MARK J. ESPOSITO
CALCULATED-DESIGNED BY: GARY TOLMIE
CHECKED BY: ARMANDO SOLIS
REVISED BY | DATE REVISED

H:\pdata\10105878\Admin\submittals\2009-07-15 FINAL Electronic-Only Submittal\DGN\radialPLOT File81 2009-2009 13:54:31ua049.dgn

BORDER LAST REVISED 4/11/2008
RELATIVE BORDER SCALE IS IN INCHES 0 1 2 3
USERNAME => trmariak
DGN FILE => c0F031ua049.dgn
CU 12220
EA 0F0311

Dist	COUNTY	ROUTE	POST MILES TOTAL PROJECT	SHEET No.	TOTAL SHEETS
12	Ora	57	16.2/18.6	612	960

REGISTERED CIVIL ENGINEER — 7/15/09 DATE

ARMANDO SOLIS No. 72012 Exp. 6-30-10 CIVIL — REGISTERED PROFESSIONAL ENGINEER — STATE OF CALIFORNIA

12-14-09
PLANS APPROVAL DATE

THE STATE OF CALIFORNIA OR ITS OFFICERS OR AGENTS SHALL NOT BE RESPONSIBLE FOR THE ACCURACY OR COMPLETENESS OF SCANNED COPIES OF THIS PLAN SHEET.

RBF CONSULTING
14275 ALTON PKWY
IRVINE, CA 92618

OCTA
550 S. MAIN STREET
ORANGE, CA 92863

NOTES THIS SHEET:

1. EXISTING TYPE 334 CONTROLLER CABINET WITH MODEL 170 CONTROLLER.
2. EXISTING 120/240 V TYPE III-BF SERVICE EQUIPMENT ENCLOSURE WITH:
   100 A 240 V 2P (MAIN)
   30 A 120 V 1P (RAMP METERING)
   20 A 120 V 1P (IRRIGATION)
3. RELOCATE TYPE 1-A STANDARD AND EQUIPMENT TO TEMPORARY LOCATION. FOUNDATION SHALL BE TEMPORARY PER DETAIL A ON SHEET E-61.
4. INSTALL CONDUIT ALONG THE BACK OF THE TEMPORARY RAILING (TYPE K) PER DETAIL A ON SHEET E-19.
5. INSTALL TEMPORARY MVDS ON TEMPORARY WOOD POLE (TYPE 2). SEE SHEETS E-62 THROUGH E-63A FOR DETAILS.
6. RC UNUSED CONDUCTORS.
7. INSTALL TEMPORARY MVDS TERMINATION ASSEMBLY WITH INPUT FILE, CONTACT CLOSURE CARDS, WIRELESS RADIO EQUIPMENT, AND ASSOCIATED HARDWARE AND CABLING IN EXISTING MODEL 334 CABINET.
8. FOR ACCURATE RIGHT OF WAY DATA, CONTACT RIGHT OF WAY ENGINEERING AT THE DISTRICT OFFICE.

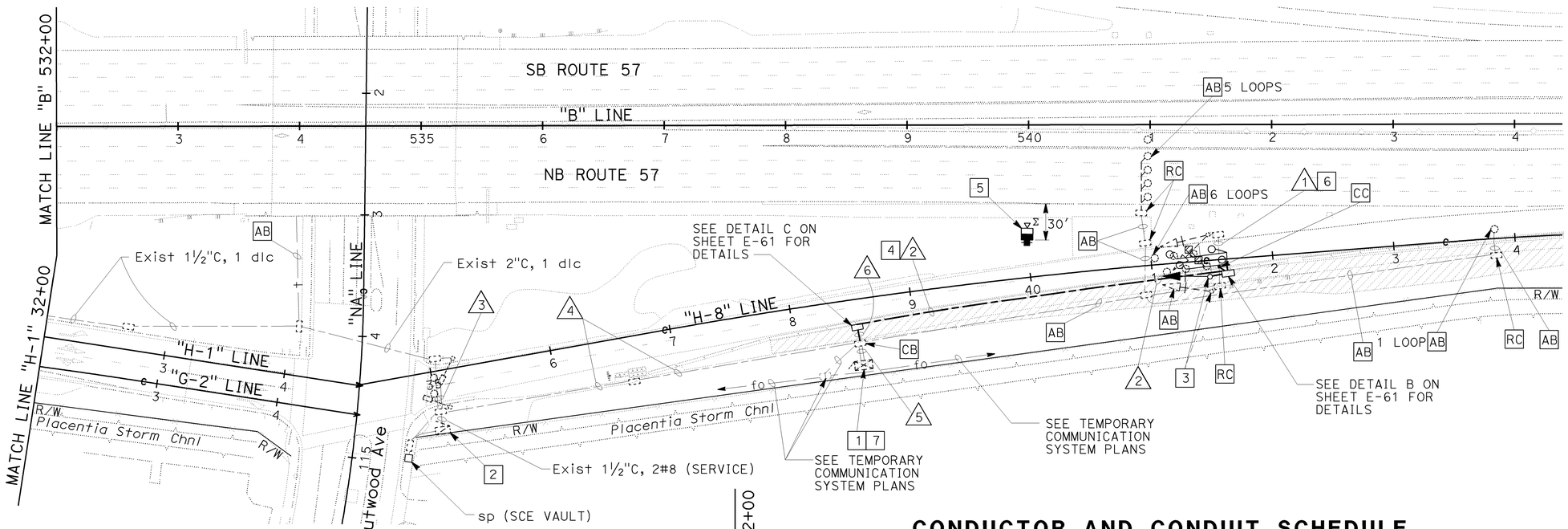

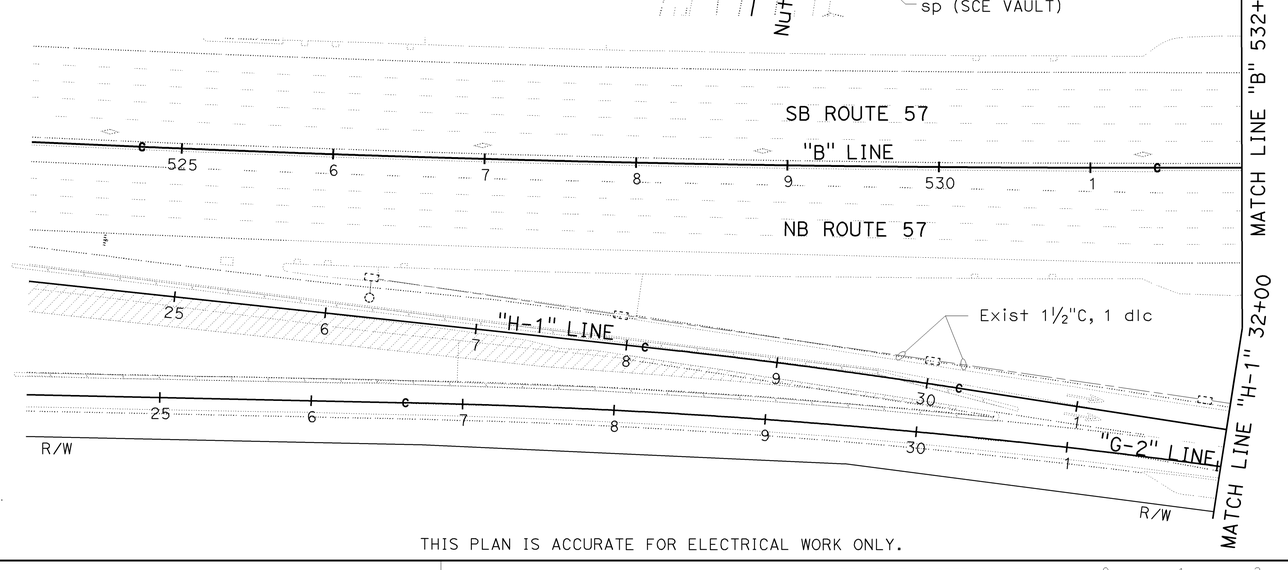

CONDUCTOR AND CONDUIT SCHEDULE

AWG OR CABLE	CONDUCTOR RUN	1	2	3	4	5	6
#14	RAMP SIGNAL	3*	6*			6*	6*
	METER ON SIGNAL			2	2	2	
DLC	QUEUE DETECTOR				2	2	
	DEMAND DETECTOR		2*			2*	2*
	PASSAGE DETECTOR		2*			2*	2*
	COUNT DETECTOR			1	1	1	
	SURVEILLANCE DETECTOR						
#10	SIGNAL COMMON	1*	1*			1*	1*
#8	SERVICE				2	2	
CONDUIT SIZE		2"	2"*	2"	2"	2-3"	2"*

ALL CONDUITS AND CONDUCTORS ARE EXISTING UNLESS NOTED OTHERWISE.
* NEW CONDUIT OR CONDUCTORS

RAMP METERING SYSTEM (LOCATION 2)

STAGE 1A

SCALE: 1" = 50'

THIS PLAN IS ACCURATE FOR ELECTRICAL WORK ONLY.

E-50

STATE OF CALIFORNIA - DEPARTMENT OF TRANSPORTATION
Caltrans
CONSULTANT FUNCTIONAL SUPERVISOR: MARK J. ESPOSITO
CALCULATED-DESIGNED BY: GARY TOLMIE
CHECKED BY: ARMANDO SOLIS
REVISED BY | DATE REVISED

H:\pdata\10105878\Admin\submittals\2009-06-29 FINAL Submittal\100% ELECTRONIC Submittal\Traffic\c0F031ua050.dgn
LAST REVISION 08-01-08 | DATE PLOTTED => 21-DEC-2009 | TIME PLOTTED => 13:54

BORDER LAST REVISED 4/11/2008 | RELATIVE BORDER SCALE IS IN INCHES (0 1 2 3) | USERNAME => trmariak | DGN FILE => c0F031ua050.dgn | CU 12220 | EA 0F0311

NOTES THIS SHEET:

1. EXISTING TYPE 334 CONTROLLER CABINET WITH MODEL 170 CONTROLLER AND TEMPORARY MICROWAVE VIDEO DETECTION EQUIPMENT.
2. EXISTING 120/240 V TYPE III-BF SERVICE EQUIPMENT ENCLOSURE WITH:
   100 A 240 V 2P (MAIN)
   30 A 120 V 1P (RAMP METERING)
   20 A 120 V 1P (IRRIGATION)
3. RS TYPE 1A STANDARD AND EQUIPMENT.
4. INSTALL RAMP METER SIGNAL INDICATION ON RETAINING WALL. SEE DETAIL, SHEET E-65.
5. RC PULL BOX AND INSTALL NEW PULL BOX IN PLACE.
6. FOR SIGN INFORMATION REFER TO SIGN PLANS.
7. RELOCATE TEMPORARY MVDS FROM STAGE 1A AND INSTALL ON TEMPORARY CCTV 25 POLE (TYPE 1). SEE SHEETS E-62 THROUGH E-63A FOR DETAILS. RC TEMPORARY WOOD POLE.
8. FOR ACCURATE RIGHT OF WAY DATA, CONTACT RIGHT OF WAY ENGINEERING AT THE DISTRICT OFFICE.

CONDUCTOR AND CONDUIT SCHEDULE

AWG OR CABLE	CONDUCTOR RUN	1	2	3	4
#14	RAMP SIGNAL	3*			3*
	METER ON SIGNAL		2	2	2
DLC	QUEUE DETECTOR			2	2
	DEMAND DETECTOR	1*			1*
	PASSAGE DETECTOR	1*			1*
	COUNT DETECTOR				
	SURVEILLANCE DETECTOR				
#10	SIGNAL COMMON	1*			1*
#8	SERVICE			2	2
CONDUIT SIZE		3"*	2"	2"	2-3"

ALL CONDUITS AND CONDUCTORS ARE EXISTING UNLESS NOTED OTHERWISE.
* NEW CONDUIT OR CONDUCTORS

Dist	COUNTY	ROUTE	POST MILES TOTAL PROJECT	SHEET No.	TOTAL SHEETS
12	Ora	57	16.2/18.6	613	960

REGISTERED CIVIL ENGINEER — 7/15/09 DATE

ARMANDO SOLIS No. 72012 Exp. 6-30-10 CIVIL — REGISTERED PROFESSIONAL ENGINEER — STATE OF CALIFORNIA

12-14-09
PLANS APPROVAL DATE

THE STATE OF CALIFORNIA OR ITS OFFICERS OR AGENTS SHALL NOT BE RESPONSIBLE FOR THE ACCURACY OR COMPLETENESS OF SCANNED COPIES OF THIS PLAN SHEET.

RBF CONSULTING
14275 ALTON PKWY
IRVINE, CA 92618

OCTA
550 S. MAIN STREET
ORANGE, CA 92863

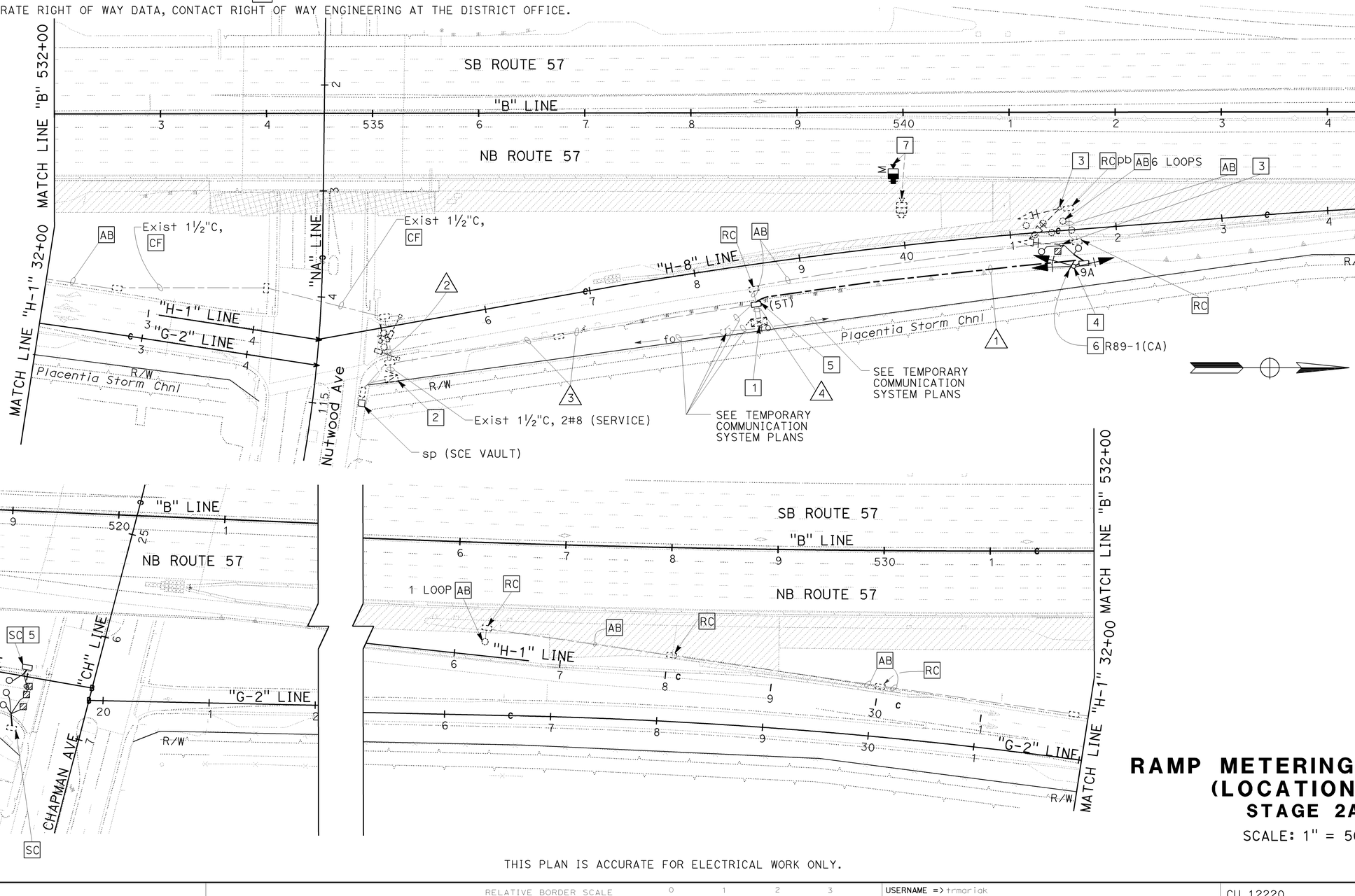

RAMP METERING SYSTEM (LOCATION 2)

STAGE 2A

SCALE: 1" = 50'

THIS PLAN IS ACCURATE FOR ELECTRICAL WORK ONLY.

E-51

STATE OF CALIFORNIA - DEPARTMENT OF TRANSPORTATION
Caltrans
CONSULTANT FUNCTIONAL SUPERVISOR: MARK J. ESPOSITO
CALCULATED-DESIGNED BY: ARMANDO SOLIS
CHECKED BY: GARY TOLMIE
REVISED BY
DATE REVISED

LAST REVISION DATE PLOTTED => 21-DEC-2009
08-01-08 TIME PLOTTED => 13:55

H:\pdata\10105878\Admin\submittals\2009-06-29 FINAL Submittal\100% ELECTRONIC SUBMITTAL - MERGED\DESIGN\Traffic\c0F031ua051.dgn

BORDER LAST REVISED 4/11/2008
RELATIVE BORDER SCALE IS IN INCHES 0 1 2 3
USERNAME => trmariak
DGN FILE => c0F031ua051.dgn
CU 12220
EA 0F0311

Dist	COUNTY	ROUTE	POST MILES TOTAL PROJECT	SHEET No.	TOTAL SHEETS
12	Ora	57	16.2/18.6	614	960

REGISTERED CIVIL ENGINEER 7/15/09 DATE

12-14-09
PLANS APPROVAL DATE

REGISTERED PROFESSIONAL ENGINEER ARMANDO SOLIS No. 72012 Exp. 6-30-10 CIVIL STATE OF CALIFORNIA

THE STATE OF CALIFORNIA OR ITS OFFICERS OR AGENTS SHALL NOT BE RESPONSIBLE FOR THE ACCURACY OR COMPLETENESS OF SCANNED COPIES OF THIS PLAN SHEET.

RBF CONSULTING
14275 ALTON PKWY
IRVINE, CA 92618

OCTA
550 S. MAIN STREET
ORANGE, CA 92863

NOTES THIS SHEET:

1. EXISTING TYPE 334 CONTROLLER CABINET WITH MODEL 170 CONTROLLER AND TEMPORARY MVDS EQUIPMENT.
2. EXISTING 120/240 V TYPE III-BF SERVICE EQUIPMENT ENLOSURE WITH:
   100 A 240 V 2P (MAIN)
   30 A 120 V 1P (RAMP METERING)
   20 A 120 V 1P (IRRIGATION)
3. INSTALL TYPE 1-A STANDARD WITH RAMP METER SIGNAL INDICATIONS.
4. FOR SIGN INFORMATION REFER TO SIGN PLANS.
5. RELOCATE TEMPORARY MVDS FROM STAGE 2A TEMPORARY WOOD POLE (TYPE 2). SEE SHEETS E-62 THROUGH E-63A FOR DETAILS.
6. FOR ACCURATE RIGHT OF WAY DATA, CONTACT RIGHT OF WAY ENGINEERING AT THE DISTRICT OFFICE.

CONDUCTOR AND CONDUIT SCHEDULE

AWG OR CABLE	CONDUCTOR RUN	1	2	3	4	5
#14	RAMP SIGNAL	3*	6*			6*
	METER ON SIGNAL			2	2	2
DLC	QUEUE DETECTOR				2	2
	DEMAND DETECTOR		1/1*			1/1*
	PASSAGE DETECTOR		1/1*			1/1*
	COUNT DETECTOR		1*	1*	1*	2*
	SURVEILLANCE DETECTOR					
#10	SIGNAL COMMON	1*	1*			1*
#8	SERVICE				2	2
CONDUIT SIZE		3"*	3"	2"	2"	2-3"

ALL CONDUITS AND CONDUCTORS ARE EXISTING UNLESS NOTED OTHERWISE.
* NEW CONDUIT OR CONDUCTORS

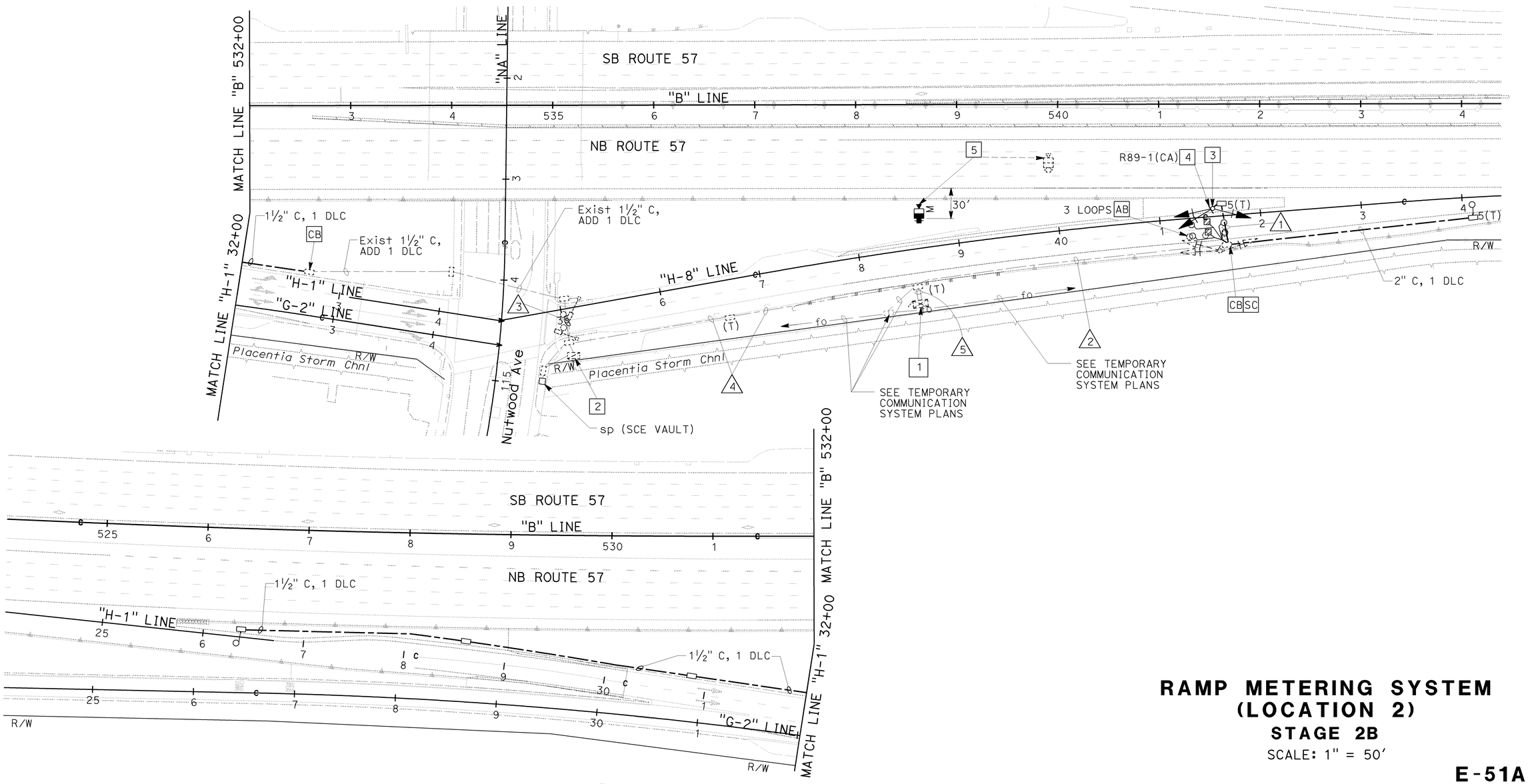

THIS PLAN IS ACCURATE FOR ELECTRICAL WORK ONLY.

RAMP METERING SYSTEM (LOCATION 2)
STAGE 2B
SCALE: 1" = 50'

E-51A

STATE OF CALIFORNIA - DEPARTMENT OF TRANSPORTATION
Caltrans
CONSULTANT FUNCTIONAL SUPERVISOR: MARK J. ESPOSITO
CALCULATED-DESIGNED BY: GARY TOLMIE
CHECKED BY: ARMANDO SOLIS
REVISED BY
DATE REVISED

H:\pdata\10105878\Admin\submittals\2009-06-29 FINAL Submittal\100% ELECTRONIC SUBMITTAL - MERGED1-DEES2009\3-5\Traffic\c0F031ua051A.dgn

LAST REVISION 08-01-08
DATE PLOTTED => 21-DEC-2009
TIME PLOTTED => 13:55

BORDER LAST REVISED 4/11/2008
RELATIVE BORDER SCALE IS IN INCHES 0 1 2 3
USERNAME => trmariak
DGN FILE => c0F031ua051A.dgn
CU 12220
EA 0F0311

Dist	COUNTY	ROUTE	POST MILES TOTAL PROJECT	SHEET No.	TOTAL SHEETS
12	Ora	57	16.2/18.6	615	960

REGISTERED CIVIL ENGINEER — 7/15/09 DATE

12-14-09
PLANS APPROVAL DATE

REGISTERED PROFESSIONAL ENGINEER — ARMANDO SOLIS — No. 72012 — Exp. 6-30-10 — CIVIL — STATE OF CALIFORNIA

THE STATE OF CALIFORNIA OR ITS OFFICERS OR AGENTS SHALL NOT BE RESPONSIBLE FOR THE ACCURACY OR COMPLETENESS OF SCANNED COPIES OF THIS PLAN SHEET.

RBF CONSULTING
14275 ALTON PKWY
IRVINE, CA 92618

OCTA
550 S. MAIN STREET
ORANGE, CA 92863

NOTES THIS SHEET:

1. EXISTING TYPE 334 CONTROLLER CABINET WITH MODEL 170 CONTROLLER.
2. EXISTING 120/240 V SERVICE IN TYPE III-BF SERVICE EQUIPMENT ENCLOSURE WITH:
   100 A 240 V 2P (MAIN)
   30 A 120 V 1P (RAMP METERING)
   20 A 120 V 1P (IRRIGATION)
3. RS TEMPORARY MVDS EQUIPMENT.
4. FOR ACCURATE RIGHT OF WAY DATA, CONTACT RIGHT OF WAY ENGINEERING AT THE DISTRICT OFFICE.

CONDUCTOR AND CONDUIT SCHEDULE

AWG OR CABLE	CONDUCTOR RUN	1	2	3	4	5
#14	RAMP SIGNAL	3	6			6
	METER ON SIGNAL			2	2	2
DLC	QUEUE DETECTOR				2	2
	DEMAND DETECTOR		2			2
	PASSAGE DETECTOR		2			2
	COUNT DETECTOR		1	1	1	2
	SURVEILLANCE DETECTOR	12*	12*			12*
#10	SIGNAL COMMON	1	1			1
#8	SERVICE				2	2
CONDUIT SIZE		3"	3"	2"	2"	2-3"

ALL CONDUITS AND CONDUCTORS ARE EXISTING UNLESS NOTED OTHERWISE.
* NEW CONDUIT OR CONDUCTORS

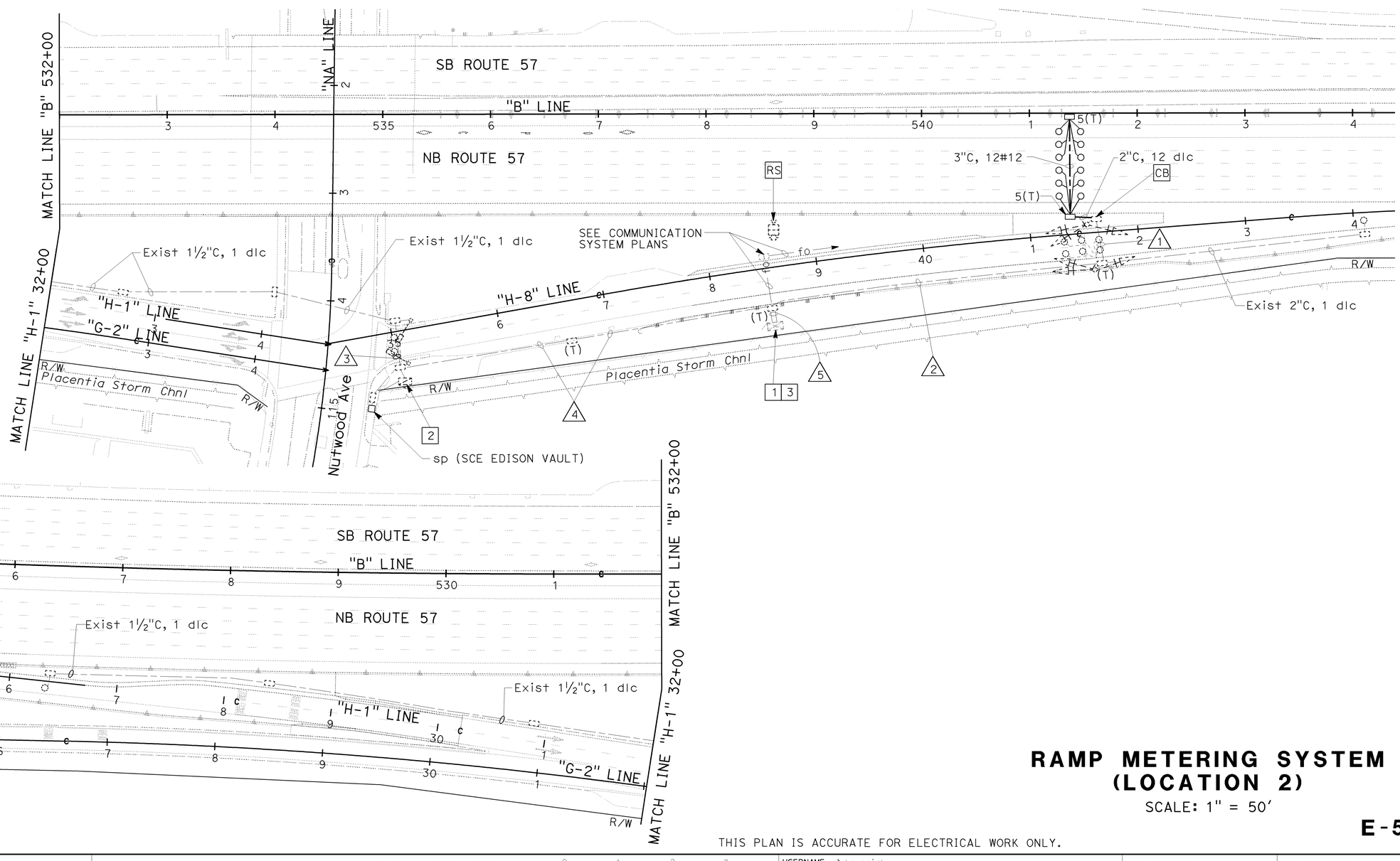

RAMP METERING SYSTEM (LOCATION 2)

SCALE: 1" = 50'

E-52

THIS PLAN IS ACCURATE FOR ELECTRICAL WORK ONLY.

LAST REVISION DATE PLOTTED => 21-DEC-2009
TIME PLOTTED => 13:55
08-01-08

STATE OF CALIFORNIA - DEPARTMENT OF TRANSPORTATION
CONSULTANT FUNCTIONAL SUPERVISOR: MARK J. ESPOSITO
CALCULATED-DESIGNED BY: GARY TOLMIE
CHECKED BY: ARMANDO SOLIS
REVISED BY
DATE REVISED

H:\pdata\10105878\Admin\submittals\2009-06-29 FINAL Submittal\100% ELECTRONIC SUBMITTAL - MERGED\DEES2009\TS&SF\ic\c0F031ua052.dgn

BORDER LAST REVISED 4/11/2008
RELATIVE BORDER SCALE IS IN INCHES 0 1 2 3
USERNAME => trmariak
DGN FILE => c0F031ua052.dgn
CU 12220
EA 0F0311

Dist	COUNTY	ROUTE	POST MILES TOTAL PROJECT	SHEET No.	TOTAL SHEETS
12	Ora	57	16.2/18.6	616	960

REGISTERED CIVIL ENGINEER — DATE 7/15/09

ARMANDO SOLIS No. 72012 Exp. 6-30-10 CIVIL — REGISTERED PROFESSIONAL ENGINEER — STATE OF CALIFORNIA

12-14-09
PLANS APPROVAL DATE

THE STATE OF CALIFORNIA OR ITS OFFICERS OR AGENTS SHALL NOT BE RESPONSIBLE FOR THE ACCURACY OR COMPLETENESS OF SCANNED COPIES OF THIS PLAN SHEET.

RBF CONSULTING
14275 ALTON PKWY
IRVINE, CA 92618

OCTA
550 S. MAIN STREET
ORANGE, CA 92863

CONDUCTOR AND CONDUIT SCHEDULE

AWG OR CABLE	CONDUCTOR RUN	1	2	3	4	5
#14	RAMP SIGNAL	3				3
	METER ON SIGNAL			2	2	2
DLC	QUEUE DETECTOR				1	1
	DEMAND DETECTOR	1				1
	PASSAGE DETECTOR	1				1
	COUNT DETECTOR					
	SURVEILLANCE DETECTOR					
#10	SIGNAL COMMON	1				1
#8	SERVICE		2	2	2	2
CONDUIT SIZE		2"	2"	2"	2"	2-3"

ALL CONDUIT AND CONDUCTORS ARE EXISTING UNLESS NOTED OTHERWISE.

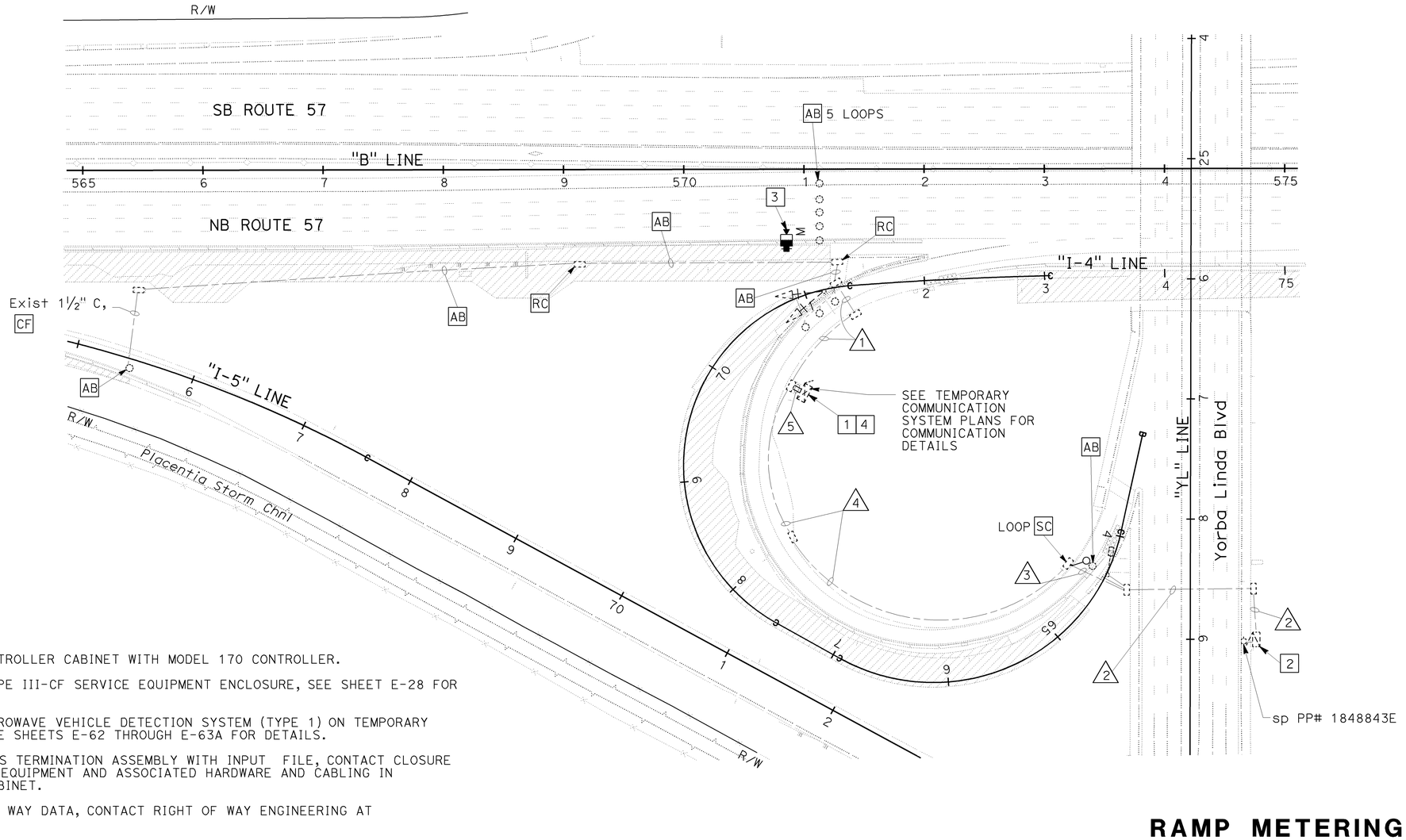

NOTES THIS SHEET:

1. EXISTING TYPE 334 CONTROLLER CABINET WITH MODEL 170 CONTROLLER.
2. EXISTING 120/240 V TYPE III-CF SERVICE EQUIPMENT ENCLOSURE, SEE SHEET E-28 FOR SERVICE DETAILS.
3. INSTALL TEMPORARY MICROWAVE VEHICLE DETECTION SYSTEM (TYPE 1) ON TEMPORARY TYPE CCTV 25 POLE. SEE SHEETS E-62 THROUGH E-63A FOR DETAILS.
4. INSTALL TEMPORARY MVDS TERMINATION ASSEMBLY WITH INPUT FILE, CONTACT CLOSURE CARDS, WIRELESS RADIO EQUIPMENT AND ASSOCIATED HARDWARE AND CABLING IN EXISTING MODEL 334 CABINET.
5. FOR ACCURATE RIGHT OF WAY DATA, CONTACT RIGHT OF WAY ENGINEERING AT THE DISTRICT OFFICE.

RAMP METERING SYSTEM (LOCATION 3)
STAGES 1A AND 1B

SCALE: 1" = 50'

E-53

THIS PLAN IS ACCURATE FOR ELECTRICAL WORK ONLY.

STATE OF CALIFORNIA - DEPARTMENT OF TRANSPORTATION | CONSULTANT FUNCTIONAL SUPERVISOR: MARK J. ESPOSITO | CALCULATED-DESIGNED BY: ARMANDO SOLIS | CHECKED BY: GARY TOLMIE | REVISED BY | DATE REVISED

H:\pdata\10105878\Admin\submittals\2009-06-29 FINAL Submittal\100% ELECTRONIC SUBMITTAL - MERGED FILES\c0F031ua053.dgn

LAST REVISION | DATE PLOTTED => 21-DEC-2009 | TIME PLOTTED => 13:55 | 08-01-08

BORDER LAST REVISED 4/11/2008 | RELATIVE BORDER SCALE IS IN INCHES 0 1 2 3 | USERNAME => trmariak | DGN FILE => c0F031ua053.dgn | CU 12220 | EA 0F0311

Dist	COUNTY	ROUTE	POST MILES TOTAL PROJECT	SHEET No.	TOTAL SHEETS
12	Ora	57	16.2/18.6	617	960

REGISTERED CIVIL ENGINEER 7/15/09 DATE

12-14-09
PLANS APPROVAL DATE

REGISTERED PROFESSIONAL ENGINEER ARMANDO SOLIS No. 72012 Exp. 6-30-10 CIVIL STATE OF CALIFORNIA

THE STATE OF CALIFORNIA OR ITS OFFICERS OR AGENTS SHALL NOT BE RESPONSIBLE FOR THE ACCURACY OR COMPLETENESS OF SCANNED COPIES OF THIS PLAN SHEET.

RBF CONSULTING
14275 ALTON PKWY
IRVINE, CA 92618

OCTA
550 S. MAIN STREET
ORANGE, CA 92863

CONDUCTOR AND CONDUIT SCHEDULE

AWG OR CABLE	CONDUCTOR RUN	1	2	3	4	5	6
#14	RAMP SIGNAL	3	3				3
	METER ON SIGNAL				2	2	2
DLC	QUEUE DETECTOR				1	1	1
	DEMAND DETECTOR		1				1
	PASSAGE DETECTOR		1				1
	COUNT DETECTOR	1	2				2
	SURVEILLANCE DETECTOR						
#10	SIGNAL COMMON	1	1				1
#8	SERVICE			*2	2	2	2
CONDUIT SIZE		3"	3"	*2"	2"	2"	2-3"

ALL CONDUITS AND CONDUCTORS ARE NEW UNLESS NOTED OTHERWISE.
* EXISTING CONDUIT OR CONDUCTORS

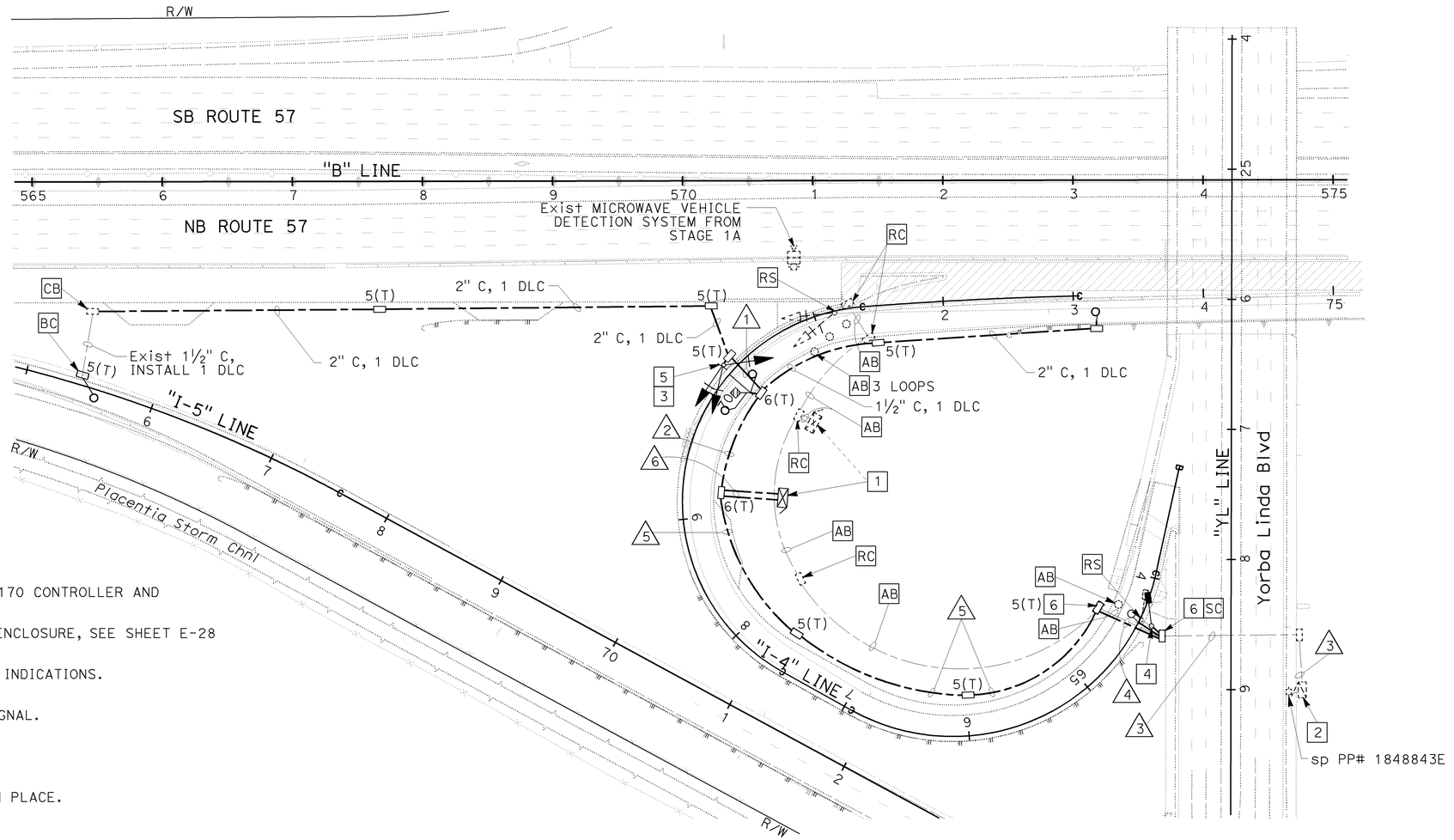

NOTES THIS SHEET:

1. RELOCATE TYPE 334 CONTROLLER CABINET WITH MODEL 170 CONTROLLER AND TEMPORARY MVDS EQUIPMENT.
2. EXISTING 120/240 V TYPE III-CF SERVICE EQUIPMENT ENCLOSURE, SEE SHEET E-28 FOR SERVICE DETAILS.
3. INSTALL TYPE 1-A STANDARD WITH RAMP METER SIGNAL INDICATIONS.
4. INSTALL TYPE 1-A STANDARD WITH "RAMP METER ON" SIGNAL.
5. FOR SIGN INFORMATION REFER TO SIGN PLANS.
6. RC EXISTING PULL BOX AND INSTALL NEW PULL BOX IN PLACE.
7. FOR ACCURATE RIGHT OF WAY DATA, CONTACT RIGHT OF WAY ENGINEERING AT THE DISTRICT OFFICE.

RAMP METERING SYSTEM (LOCATION 3)
STAGE 1C

SCALE: 1" = 50'

E-53A

THIS PLAN IS ACCURATE FOR ELECTRICAL WORK ONLY.

STATE OF CALIFORNIA - DEPARTMENT OF TRANSPORTATION
Caltrans
CONSULTANT FUNCTIONAL SUPERVISOR: MARK J. ESPOSITO
CALCULATED-DESIGNED BY: GARY TOLMIE
CHECKED BY: ARMANDO SOLIS
REVISED BY
DATE REVISED

H:\pdata\10105878\Admin\submittals\2009-06-29 FINAL Submittal\100% ELECTRONIC SUBMITTAL - MERGED FILES\2009\13-5\ffic\c0F031ua053A.dgn

LAST REVISION 08-01-08
DATE PLOTTED => 21-DEC-2009
TIME PLOTTED => 13:55

Dist	COUNTY	ROUTE	POST MILES TOTAL PROJECT	SHEET No.	TOTAL SHEETS
12	Ora	57	16.2/18.6	618	960

REGISTERED CIVIL ENGINEER — 7/15/09 DATE

ARMANDO SOLIS No. 72012 Exp. 6-30-10 CIVIL — REGISTERED PROFESSIONAL ENGINEER — STATE OF CALIFORNIA

12-14-09
PLANS APPROVAL DATE

THE STATE OF CALIFORNIA OR ITS OFFICERS OR AGENTS SHALL NOT BE RESPONSIBLE FOR THE ACCURACY OR COMPLETENESS OF SCANNED COPIES OF THIS PLAN SHEET.

RBF CONSULTING
14275 ALTON PKWY
IRVINE, CA 92618

OCTA
550 S. MAIN STREET
ORANGE, CA 92863

CONDUCTOR AND CONDUIT SCHEDULE

AWG OR CABLE	CONDUCTOR RUN	1	2	3	4	5	6
#14	RAMP SIGNAL	3	3				3
	METER ON SIGNAL				2	2	2
DLC	QUEUE DETECTOR				1	1	1
	DEMAND DETECTOR		1				1
	PASSAGE DETECTOR		1				1
	COUNT DETECTOR	1	2				2
	SURVEILLANCE DETECTOR						
#10	SIGNAL COMMON	1	1				1
#8	SERVICE			2	2	2	2
CONDUIT SIZE		3"	3"	2"	2"	2"	2-3"

ALL CONDUIT AND CONDUCTORS ARE EXISTING UNLESS NOTED OTHERWISE.

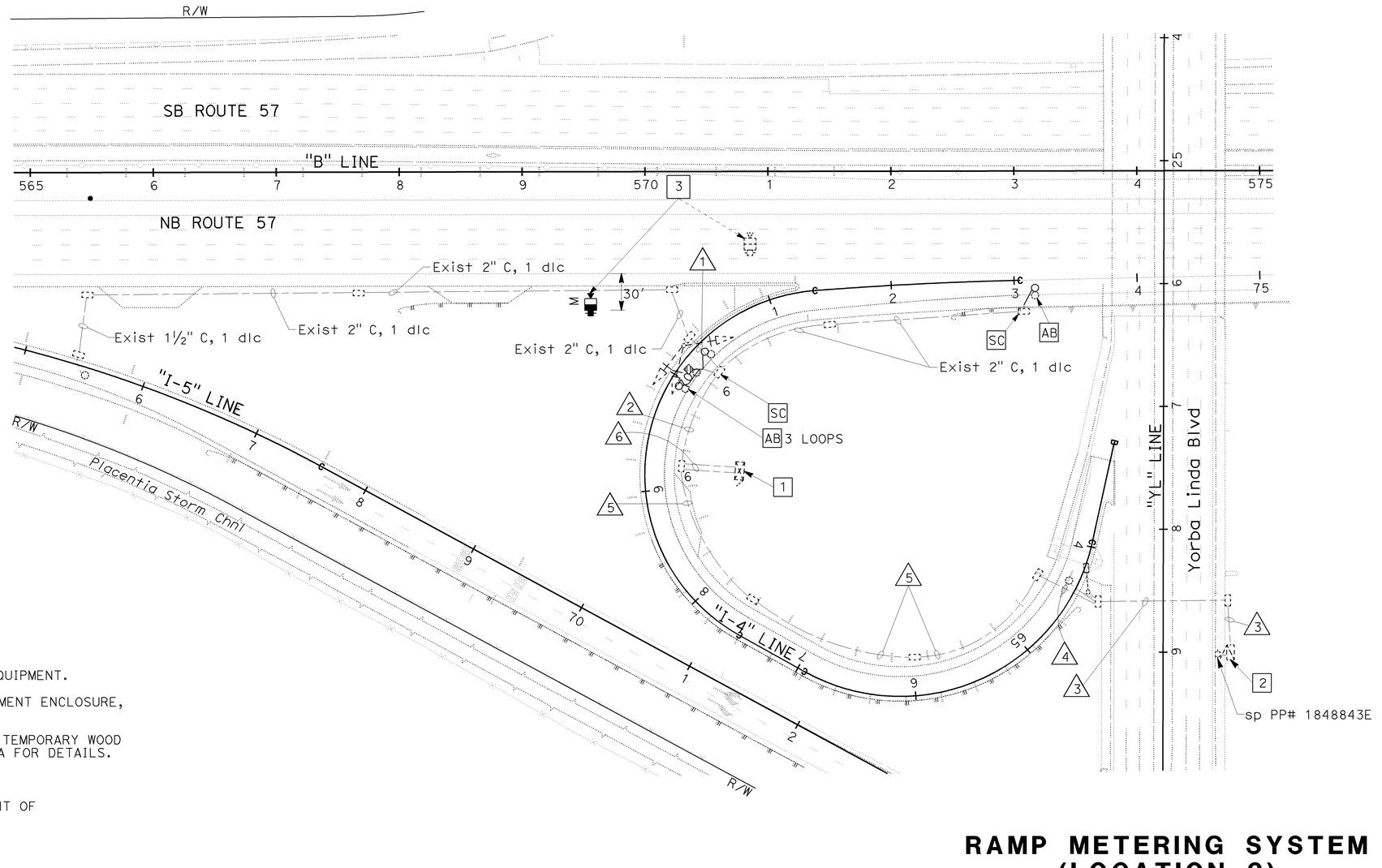

NOTES THIS SHEET:

1. EXISTING TYPE 334 CONTROLLER CABINET WITH MODEL 170 CONTROLLER AND TEMPORARY MVDS EQUIPMENT.
2. EXISTING 120/240 V TYPE III-CF SERVICE EQUIPMENT ENCLOSURE, SEE SHEET E-28 FOR SERVICE DETAILS.
3. RELOCATE MVDS FROM STAGE 1A AND INSTALL ON TEMPORARY WOOD POLE (TYPE 2). SEE SHEETS E-62 THROUGH E-63A FOR DETAILS.
   RC TEMPORARY TYPE CCTV 25 POLE.
4. FOR ACCURATE RIGHT OF WAY DATA, CONTACT RIGHT OF WAY ENGINEERING AT THE DISTRICT OFFICE.

RAMP METERING SYSTEM (LOCATION 3)
STAGES 2A AND 2B

SCALE: 1" = 50'

E-54

THIS PLAN IS ACCURATE FOR ELECTRICAL WORK ONLY.

LAST REVISION — DATE PLOTTED => 21-DEC-2009 — TIME PLOTTED => 13:55 — 08-01-08

STATE OF CALIFORNIA - DEPARTMENT OF TRANSPORTATION | CONSULTANT FUNCTIONAL SUPERVISOR: MARK J. ESPOSITO | CALCULATED-DESIGNED BY: GARY TOLMIE | CHECKED BY: ARMANDO SOLIS | REVISED BY | DATE REVISED

H:\pdata\10105878\Admin\submittals\2009-06-29 FINAL Submittal\100% ELECTRONIC SUBMITTAL - MERGED\DEES2008\YJ7\c0F031ua054.dgn

BORDER LAST REVISED 4/11/2008 | RELATIVE BORDER SCALE IS IN INCHES 0 1 2 3 | USERNAME => trmariak | DGN FILE => c0F031ua054.dgn | CU 12220 | EA 0F0311

Dist	COUNTY	ROUTE	POST MILES TOTAL PROJECT	SHEET No.	TOTAL SHEETS
12	Ora	57	16.2/18.6	619	960

REGISTERED CIVIL ENGINEER — 7/15/09 DATE

12-14-09
PLANS APPROVAL DATE

REGISTERED PROFESSIONAL ENGINEER — ARMANDO SOLIS — No. 72012 — Exp. 6-30-10 — CIVIL — STATE OF CALIFORNIA

THE STATE OF CALIFORNIA OR ITS OFFICERS OR AGENTS SHALL NOT BE RESPONSIBLE FOR THE ACCURACY OR COMPLETENESS OF SCANNED COPIES OF THIS PLAN SHEET.

RBF CONSULTING
14275 ALTON PKWY
IRVINE, CA 92618

OCTA
550 S. MAIN STREET
ORANGE, CA 92863

CONDUCTOR AND CONDUIT SCHEDULE

AWG OR CABLE	CONDUCTOR RUN	△1	△2	△3	△4	△5	△6
#14	RAMP SIGNAL	3	3				3
	METER ON SIGNAL				2	2	2
DLC	QUEUE DETECTOR				1	1	1
	DEMAND DETECTOR		1				1
	PASSAGE DETECTOR		1				1
	COUNT DETECTOR	1	2				2
	SURVEILLANCE DETECTOR	*12	*12				*12
#10	SIGNAL COMMON	1	1				1
#8	SERVICE			2	2	2	2
CONDUIT SIZE		3"	3"	2"	2"	2"	2-3"

ALL CONDUIT AND CONDUCTORS ARE EXISTING UNLESS NOTED OTHERWISE.
* NEW CONDUIT OR CONDUCTORS

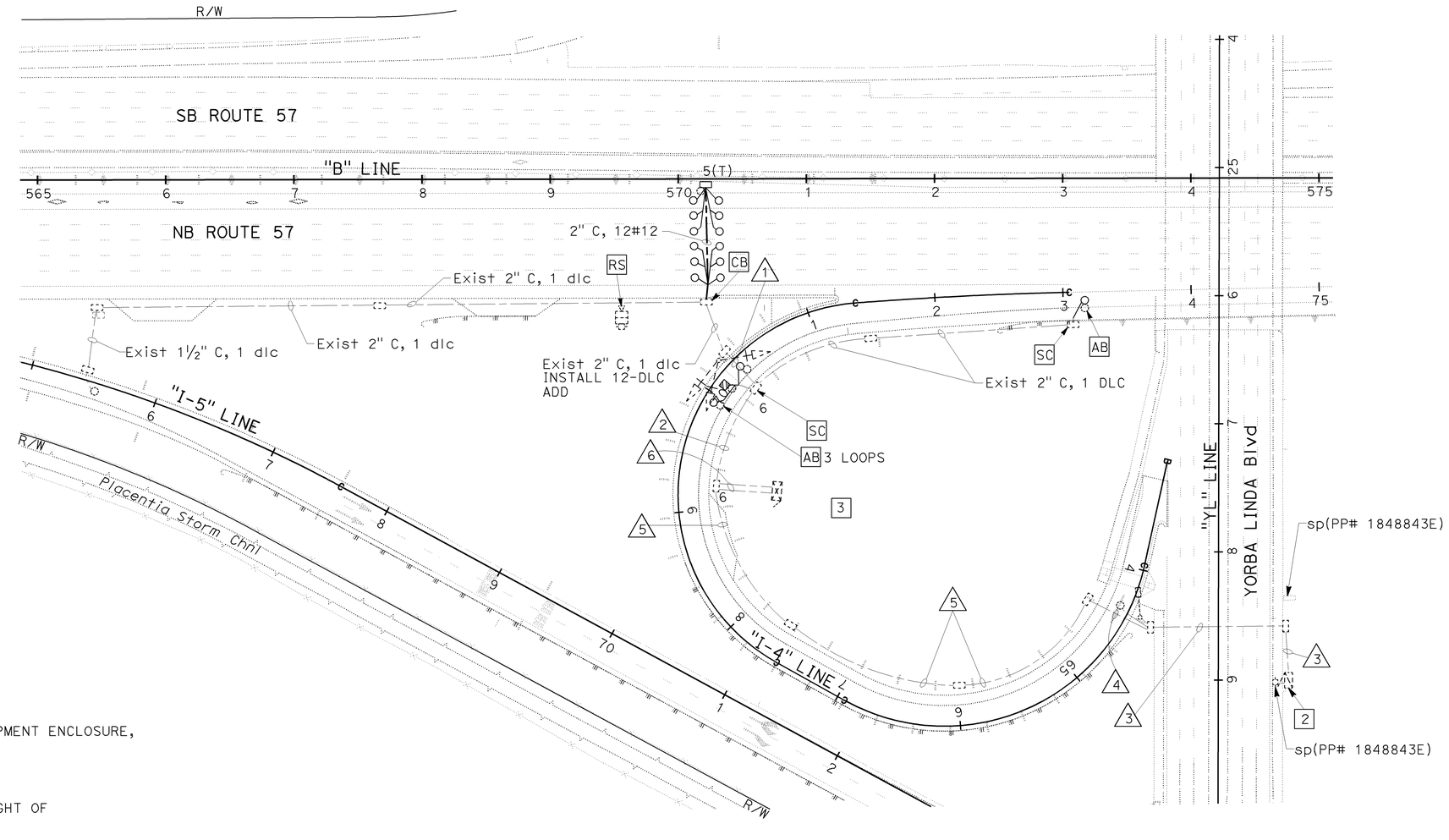

NOTES THIS SHEET:

1. EXISTING TYPE 334 CONTROLLER CABINET WITH MODEL 170 CONTROLLER.
2. EXISTING 120/240 V TYPE III-CF SERVICE EQUIPMENT ENCLOSURE, SEE SHEET E-28 FOR SERVICE DETAILS.
3. RS TEMPORARY MVDS EQUIPMENT COMPLETE.
4. FOR ACCURATE RIGHT OF WAY DATA, CONTACT RIGHT OF WAY ENGINEERING AT THE DISTRICT OFFICE.

RAMP METERING SYSTEM (LOCATION 3)

SCALE: 1" = 50'

E-55

THIS PLAN IS ACCURATE FOR ELECTRICAL WORK ONLY.

STATE OF CALIFORNIA - DEPARTMENT OF TRANSPORTATION
CONSULTANT FUNCTIONAL SUPERVISOR: MARK J. ESPOSITO
CALCULATED-DESIGNED BY: GARY TOLMIE
CHECKED BY: ARMANDO SOLIS
REVISED BY / DATE REVISED

H:\pdata\10105878\Admin\submittals\2009-06-29 FINAL Submittal\100% ELECTRONIC SUBMITTAL - MERGED FILES 2009\traffic\c0F031ua055.dgn

LAST REVISION 08-01-08
DATE PLOTTED => 21-DEC-2009
TIME PLOTTED => 12:42

BORDER LAST REVISED 4/11/2008
RELATIVE BORDER SCALE IS IN INCHES 0 1 2 3
USERNAME => trstrk
DGN FILE => c0F031ua055.dgn
CU 12220
EA 0F0311

Dist	COUNTY	ROUTE	POST MILES TOTAL PROJECT	SHEET No.	TOTAL SHEETS
12	Ora	57	16.2/18.6	620	960

REGISTERED CIVIL ENGINEER 7/15/09 DATE

12-14-09
PLANS APPROVAL DATE

REGISTERED PROFESSIONAL ENGINEER ARMANDO SOLIS No. 72012 Exp. 6-30-10 CIVIL STATE OF CALIFORNIA

THE STATE OF CALIFORNIA OR ITS OFFICERS OR AGENTS SHALL NOT BE RESPONSIBLE FOR THE ACCURACY OR COMPLETENESS OF SCANNED COPIES OF THIS PLAN SHEET.

RBF CONSULTING
14275 ALTON PKWY
IRVINE, CA 92618

OCTA
550 S. MAIN STREET
ORANGE, CA 92863

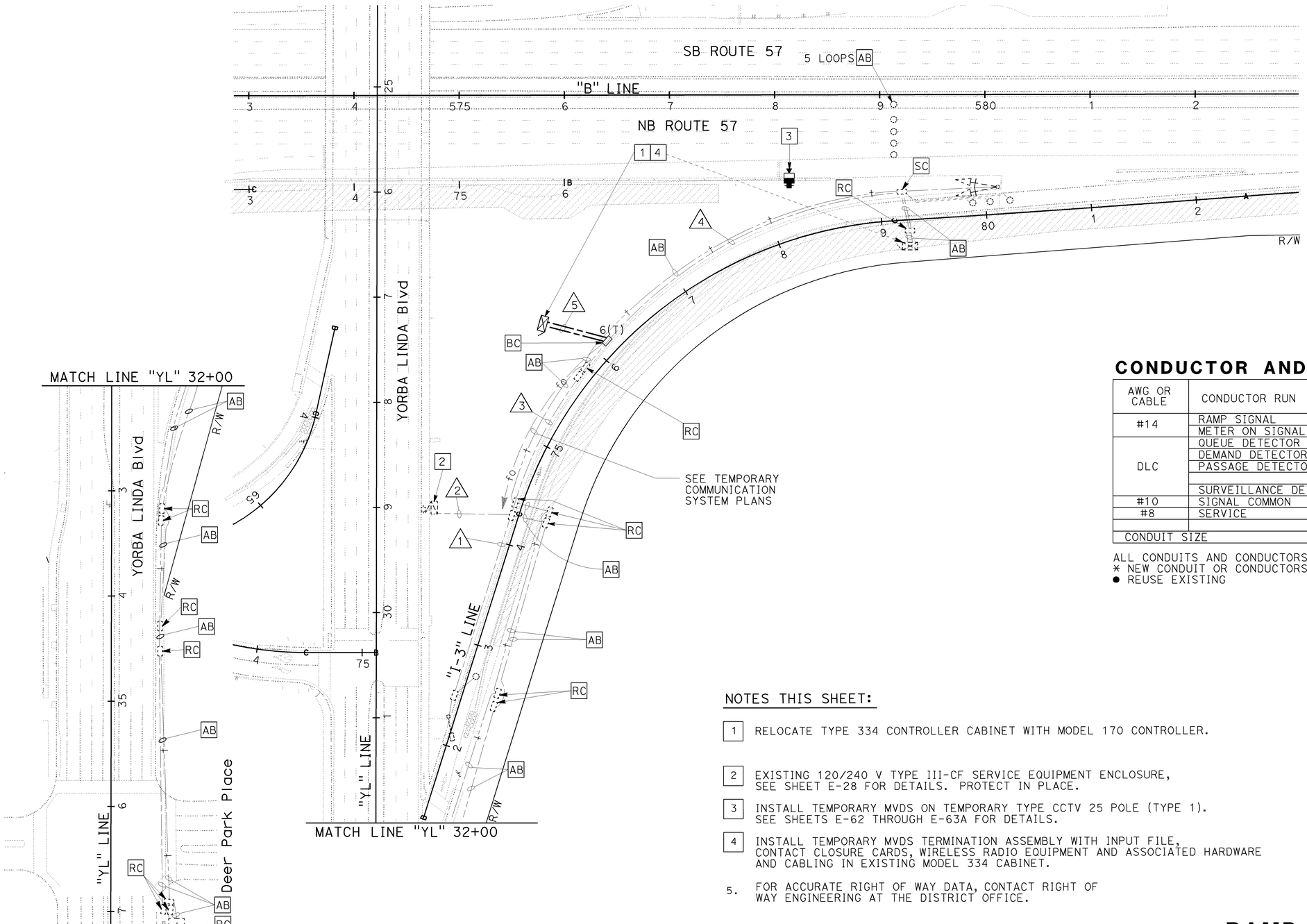

CONDUCTOR AND CONDUIT SCHEDULE

AWG OR CABLE	CONDUCTOR RUN	1	2	3	4	5
#14	RAMP SIGNAL				* 3	* 3
	METER ON SIGNAL	2		2		● 2
DLC	QUEUE DETECTOR	1		1		● 1
	DEMAND DETECTOR				* 1	* 1
	PASSAGE DETECTOR				* 1	* 1
	SURVEILLANCE DETECTOR				* 5	* 5
#10	SIGNAL COMMON				* 1	* 1
#8	SERVICE		2	2		● 2
CONDUIT SIZE		1½"	1½"	2"	2"	*2-3"

ALL CONDUITS AND CONDUCTORS ARE EXISTING UNLESS NOTED OTHERWISE.
* NEW CONDUIT OR CONDUCTORS
● REUSE EXISTING

NOTES THIS SHEET:

1. RELOCATE TYPE 334 CONTROLLER CABINET WITH MODEL 170 CONTROLLER.
2. EXISTING 120/240 V TYPE III-CF SERVICE EQUIPMENT ENCLOSURE, SEE SHEET E-28 FOR DETAILS. PROTECT IN PLACE.
3. INSTALL TEMPORARY MVDS ON TEMPORARY TYPE CCTV 25 POLE (TYPE 1). SEE SHEETS E-62 THROUGH E-63A FOR DETAILS.
4. INSTALL TEMPORARY MVDS TERMINATION ASSEMBLY WITH INPUT FILE, CONTACT CLOSURE CARDS, WIRELESS RADIO EQUIPMENT AND ASSOCIATED HARDWARE AND CABLING IN EXISTING MODEL 334 CABINET.
5. FOR ACCURATE RIGHT OF WAY DATA, CONTACT RIGHT OF WAY ENGINEERING AT THE DISTRICT OFFICE.

RAMP METERING SYSTEM (LOCATION 4)
STAGE 1A

SCALE: 1" = 50'

E-56

THIS PLAN IS ACCURATE FOR ELECTRICAL WORK ONLY.

STATE OF CALIFORNIA - DEPARTMENT OF TRANSPORTATION
Caltrans
CONSULTANT FUNCTIONAL SUPERVISOR: MARK J. ESPOSITO
CALCULATED-DESIGNED BY: GARY TOLMIE
CHECKED BY: ARMANDO SOLIS
REVISED BY
DATE REVISED

H:\pdata\10105878\Admin\submittals\2009-06-29 FINAL Submittal\100% ELECTRONIC SUBMITTAL - MERGED1FDEES2009\Traffic\c0F031ua056.dgn

LAST REVISION 08-01-08
DATE PLOTTED => 21-DEC-2009
TIME PLOTTED => 12:42

BORDER LAST REVISED 4/11/2008
RELATIVE BORDER SCALE IS IN INCHES 0 1 2 3
USERNAME => trstrk
DGN FILE => c0F031ua056.dgn
CU 12220
EA 0F0311

Dist	COUNTY	ROUTE	POST MILES TOTAL PROJECT	SHEET No.	TOTAL SHEETS
12	Ora	57	16.2/18.6	621	960

REGISTERED CIVIL ENGINEER — 7/15/09 DATE

12-14-09
PLANS APPROVAL DATE

REGISTERED PROFESSIONAL ENGINEER — ARMANDO SOLIS No. 72012 Exp. 6-30-10 CIVIL — STATE OF CALIFORNIA

THE STATE OF CALIFORNIA OR ITS OFFICERS OR AGENTS SHALL NOT BE RESPONSIBLE FOR THE ACCURACY OR COMPLETENESS OF SCANNED COPIES OF THIS PLAN SHEET.

RBF CONSULTING
14275 ALTON PKWY
IRVINE, CA 92618

OCTA
550 S. MAIN STREET
ORANGE, CA 92863

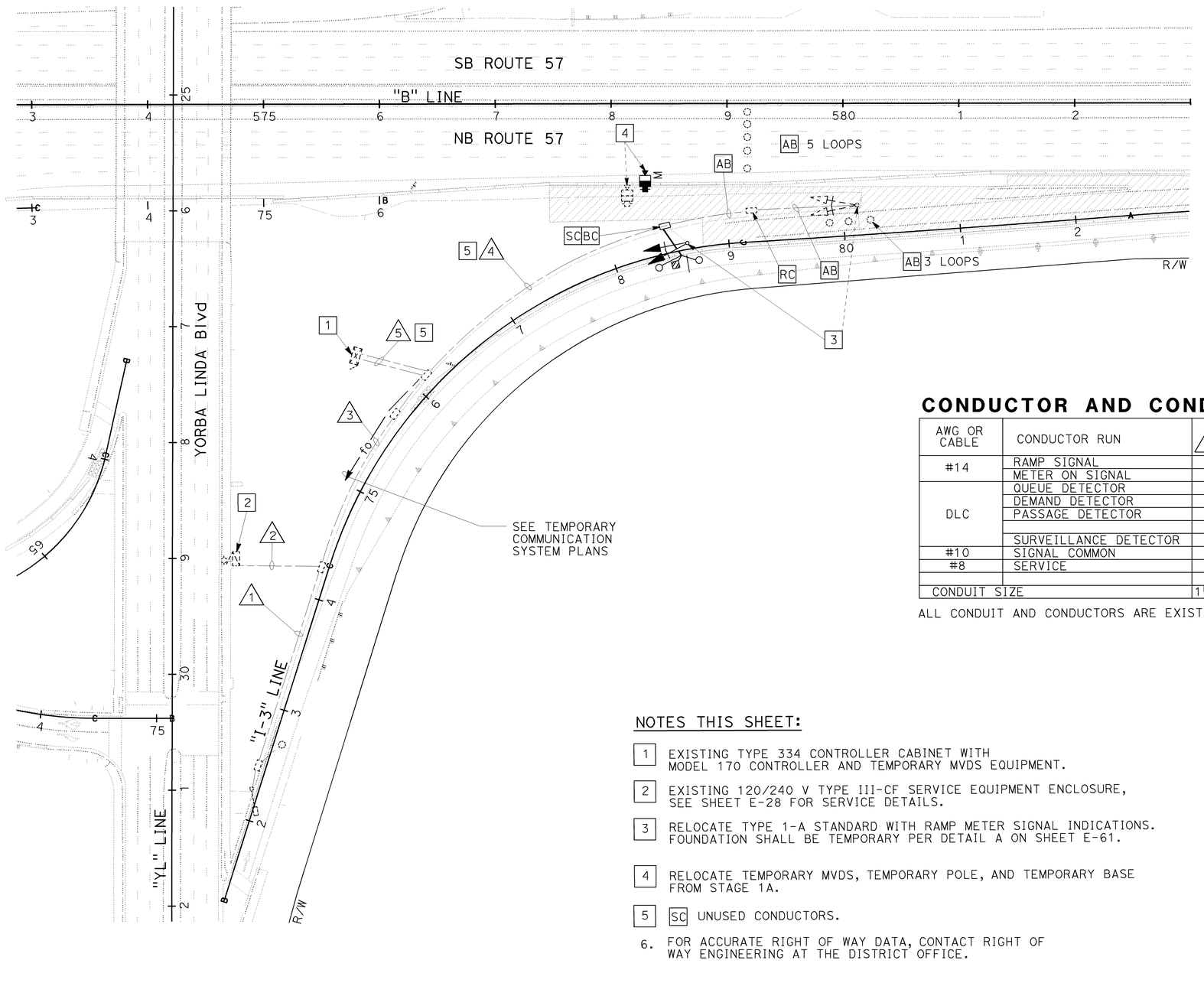

CONDUCTOR AND CONDUIT SCHEDULE

AWG OR CABLE	CONDUCTOR RUN	1	2	3	4	5
#14	RAMP SIGNAL				3	3
	METER ON SIGNAL	2		2		2
DLC	QUEUE DETECTOR	1		1		1
	DEMAND DETECTOR				1	1
	PASSAGE DETECTOR				1	1
	SURVEILLANCE DETECTOR					
#10	SIGNAL COMMON				1	1
#8	SERVICE		2	2		2
CONDUIT SIZE		1½"	1½"	2"	2"	2-3"

ALL CONDUIT AND CONDUCTORS ARE EXISTING UNLESS NOTED OTHERWISE.

NOTES THIS SHEET:

1. EXISTING TYPE 334 CONTROLLER CABINET WITH MODEL 170 CONTROLLER AND TEMPORARY MVDS EQUIPMENT.
2. EXISTING 120/240 V TYPE III-CF SERVICE EQUIPMENT ENCLOSURE, SEE SHEET E-28 FOR SERVICE DETAILS.
3. RELOCATE TYPE 1-A STANDARD WITH RAMP METER SIGNAL INDICATIONS. FOUNDATION SHALL BE TEMPORARY PER DETAIL A ON SHEET E-61.
4. RELOCATE TEMPORARY MVDS, TEMPORARY POLE, AND TEMPORARY BASE FROM STAGE 1A.
5. SC UNUSED CONDUCTORS.
6. FOR ACCURATE RIGHT OF WAY DATA, CONTACT RIGHT OF WAY ENGINEERING AT THE DISTRICT OFFICE.

RAMP METERING SYSTEM (LOCATION 4)

STAGE 1B

SCALE: 1" = 50'

E-57

THIS PLAN IS ACCURATE FOR ELECTRICAL WORK ONLY.

STATE OF CALIFORNIA - DEPARTMENT OF TRANSPORTATION
Caltrans
CONSULTANT FUNCTIONAL SUPERVISOR: MARK J. ESPOSITO
CALCULATED-DESIGNED BY: GARY TOLMIE
CHECKED BY: ARMANDO SOLIS
REVISED BY
DATE REVISED

H:\pdata\10105878\Admin\submittals\2009-06-29 FINAL Submittal\100% ELECTRONIC SUBMITTAL - MERGED\F1DES2009\0F0311ua057.dgn
H:\pdata\10105878\Admin\submittals\2009-06-29 FINAL Submittal\100% ELECTRONIC SUBMITTAL - MERGED\Traffic\c0F0311ua057.dgn

LAST REVISION DATE PLOTTED => 22-DEC-2009
08-01-08 TIME PLOTTED => 08:30

BORDER LAST REVISED 4/11/2008 | RELATIVE BORDER SCALE IS IN INCHES 0 1 2 3 | USERNAME => trstrk | DGN FILE => c0F031ua057.dgn | CU 12220 | EA 0F0311

Dist	COUNTY	ROUTE	POST MILES TOTAL PROJECT	SHEET No.	TOTAL SHEETS
12	Ora	57	16.2/18.6	622	960

REGISTERED CIVIL ENGINEER 7/15/09 DATE

12-14-09
PLANS APPROVAL DATE

REGISTERED PROFESSIONAL ENGINEER ARMANDO SOLIS No. 72012 Exp. 6-30-10 CIVIL STATE OF CALIFORNIA

THE STATE OF CALIFORNIA OR ITS OFFICERS OR AGENTS SHALL NOT BE RESPONSIBLE FOR THE ACCURACY OR COMPLETENESS OF SCANNED COPIES OF THIS PLAN SHEET.

RBF CONSULTING
14275 ALTON PKWY
IRVINE, CA 92618

OCTA
550 S. MAIN STREET
ORANGE, CA 92863

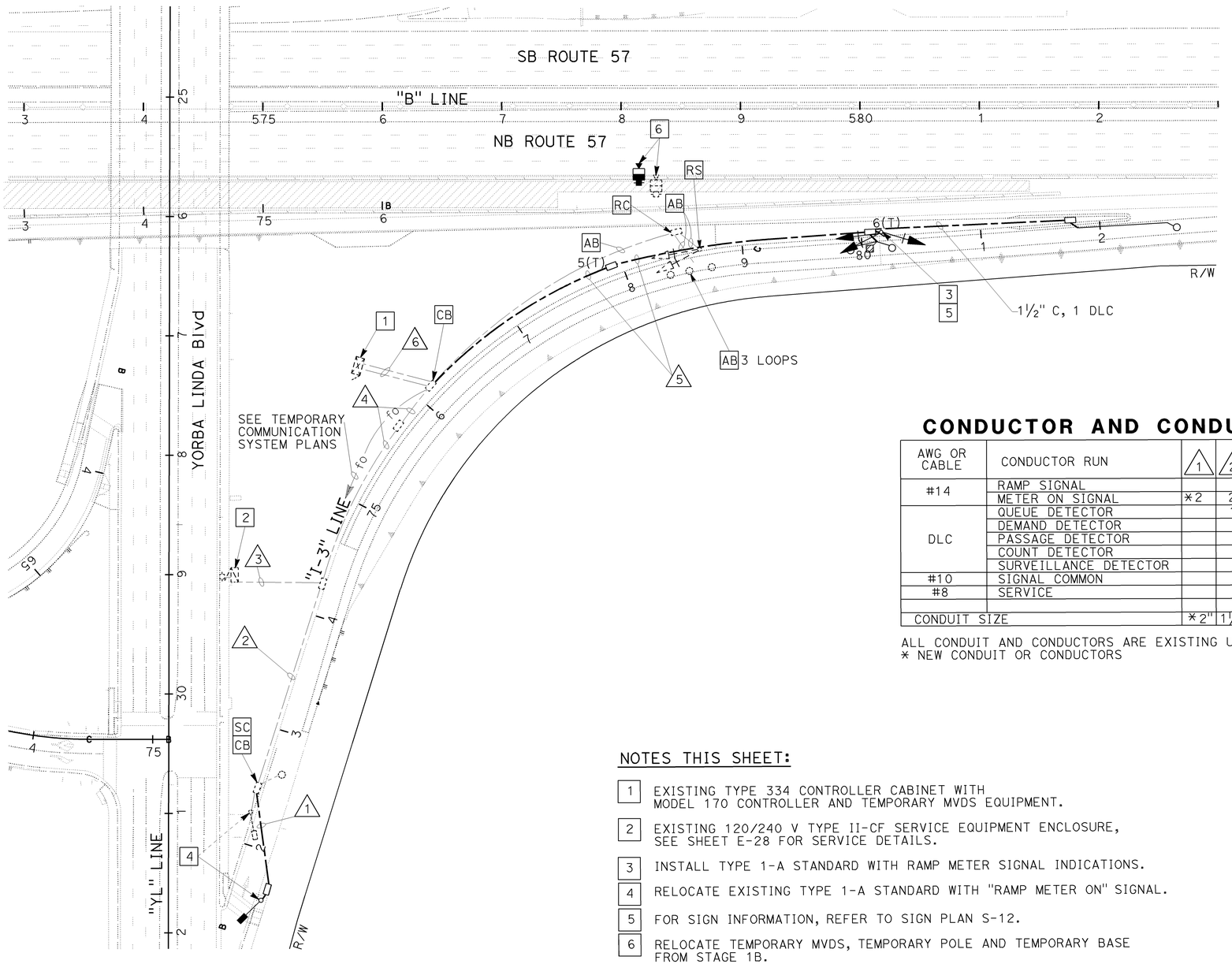

CONDUCTOR AND CONDUIT SCHEDULE

AWG OR CABLE	CONDUCTOR RUN	1	2	3	4	5	6
#14	RAMP SIGNAL					*3	*3
	METER ON SIGNAL	*2	2		2		2
DLC	QUEUE DETECTOR		1		1		1
	DEMAND DETECTOR					*1	*1
	PASSAGE DETECTOR					*1	*1
	COUNT DETECTOR					*1	*1
	SURVEILLANCE DETECTOR						
#10	SIGNAL COMMON					*1	*1
#8	SERVICE			2	2		2
CONDUIT SIZE		*2"	1½"	1½"	2"	*3"	2-3"

ALL CONDUIT AND CONDUCTORS ARE EXISTING UNLESS NOTED OTHERWISE.
* NEW CONDUIT OR CONDUCTORS

NOTES THIS SHEET:

1. EXISTING TYPE 334 CONTROLLER CABINET WITH MODEL 170 CONTROLLER AND TEMPORARY MVDS EQUIPMENT.
2. EXISTING 120/240 V TYPE II-CF SERVICE EQUIPMENT ENCLOSURE, SEE SHEET E-28 FOR SERVICE DETAILS.
3. INSTALL TYPE 1-A STANDARD WITH RAMP METER SIGNAL INDICATIONS.
4. RELOCATE EXISTING TYPE 1-A STANDARD WITH "RAMP METER ON" SIGNAL.
5. FOR SIGN INFORMATION, REFER TO SIGN PLAN S-12.
6. RELOCATE TEMPORARY MVDS, TEMPORARY POLE AND TEMPORARY BASE FROM STAGE 1B.
7. FOR ACCURATE RIGHT OF WAY DATA, CONTACT RIGHT OF WAY ENGINEERING AT THE DISTRICT OFFICE.

RAMP METERING SYSTEM (LOCATION 4)
STAGE 1C

SCALE: 1" = 50'

E-58

THIS PLAN IS ACCURATE FOR ELECTRICAL WORK ONLY.

STATE OF CALIFORNIA - DEPARTMENT OF TRANSPORTATION
Caltrans
CONSULTANT FUNCTIONAL SUPERVISOR: MARK J. ESPOSITO
CALCULATED-DESIGNED BY: GARY TOLMIE
CHECKED BY: ARMANDO SOLIS
REVISED BY
DATE REVISED

H:\pdata\10105878\Admin\submittals\2009-06-29 FINAL Submittal\100% ELECTRONIC SUBMITTAL - MERGED1FDEES2009\17-Traffic\c0F031ua058.dgn

LAST REVISION 08-01-08
DATE PLOTTED => 21-DEC-2009
TIME PLOTTED => 12:43

Dist	COUNTY	ROUTE	POST MILES TOTAL PROJECT	SHEET No.	TOTAL SHEETS
12	Ora	57	16.2/18.6	623	960

REGISTERED CIVIL ENGINEER 7/15/09 DATE

12-14-09
PLANS APPROVAL DATE

REGISTERED PROFESSIONAL ENGINEER ARMANDO SOLIS No. 72012 Exp. 6-30-10 CIVIL STATE OF CALIFORNIA

THE STATE OF CALIFORNIA OR ITS OFFICERS OR AGENTS SHALL NOT BE RESPONSIBLE FOR THE ACCURACY OR COMPLETENESS OF SCANNED COPIES OF THIS PLAN SHEET.

RBF CONSULTING
14275 ALTON PKWY
IRVINE, CA 92618

OCTA
550 S. MAIN STREET
ORANGE, CA 92863

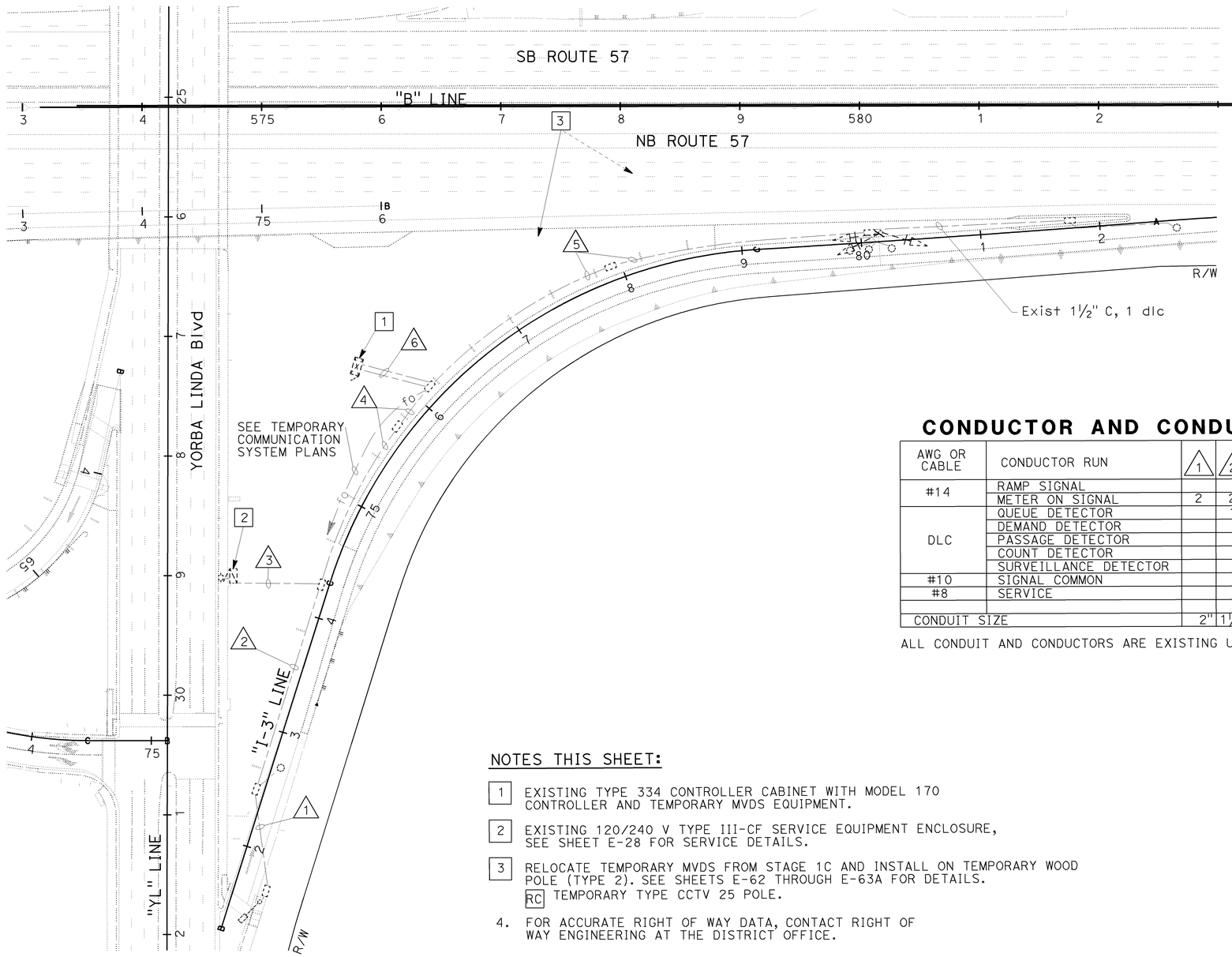

CONDUCTOR AND CONDUIT SCHEDULE

AWG OR CABLE	CONDUCTOR RUN	1	2	3	4	5	6
#14	RAMP SIGNAL					3	3
	METER ON SIGNAL	2	2		2		2
DLC	QUEUE DETECTOR		1		1		1
	DEMAND DETECTOR					1	1
	PASSAGE DETECTOR					1	1
	COUNT DETECTOR					1	1
	SURVEILLANCE DETECTOR						
#10	SIGNAL COMMON					1	1
#8	SERVICE			2	2		2
CONDUIT SIZE		2"	1½"	1½"	2"	3"	2-3"

ALL CONDUIT AND CONDUCTORS ARE EXISTING UNLESS NOTED OTHERWISE.

NOTES THIS SHEET:

1. EXISTING TYPE 334 CONTROLLER CABINET WITH MODEL 170 CONTROLLER AND TEMPORARY MVDS EQUIPMENT.
2. EXISTING 120/240 V TYPE III-CF SERVICE EQUIPMENT ENCLOSURE, SEE SHEET E-28 FOR SERVICE DETAILS.
3. RELOCATE TEMPORARY MVDS FROM STAGE 1C AND INSTALL ON TEMPORARY WOOD POLE (TYPE 2). SEE SHEETS E-62 THROUGH E-63A FOR DETAILS.
   RC TEMPORARY TYPE CCTV 25 POLE.
4. FOR ACCURATE RIGHT OF WAY DATA, CONTACT RIGHT OF WAY ENGINEERING AT THE DISTRICT OFFICE.

RAMP METERING SYSTEM (LOCATION 4)
STAGES 2A AND 2B

SCALE: 1" = 50'

E-59

THIS PLAN IS ACCURATE FOR ELECTRICAL WORK ONLY.

STATE OF CALIFORNIA - DEPARTMENT OF TRANSPORTATION
Caltrans
CONSULTANT FUNCTIONAL SUPERVISOR: MARK J. ESPOSITO
CALCULATED-DESIGNED BY: GARY TOLMIE
CHECKED BY: ARMANDO SOLIS
REVISED BY
DATE REVISED

H:\pdata\10105878\Admin\submittals\2009-06-29 FINAL Submittal\100% ELECTRONIC SUBMITTAL - MERGED\FDEES2009\17-Traffic\c0F031ua059.dgn

LAST REVISION 08-01-08
DATE PLOTTED => 21-DEC-2009
TIME PLOTTED => 12:43

Dist	COUNTY	ROUTE	POST MILES TOTAL PROJECT	SHEET No.	TOTAL SHEETS
12	Ora	57	16.2/18.6	624	960

REGISTERED CIVIL ENGINEER 7/15/09 DATE

12-14-09
PLANS APPROVAL DATE

REGISTERED PROFESSIONAL ENGINEER ARMANDO SOLIS No. 72012 Exp. 6-30-10 CIVIL STATE OF CALIFORNIA

THE STATE OF CALIFORNIA OR ITS OFFICERS OR AGENTS SHALL NOT BE RESPONSIBLE FOR THE ACCURACY OR COMPLETENESS OF SCANNED COPIES OF THIS PLAN SHEET.

RBF CONSULTING
14275 ALTON PKWY
IRVINE, CA 92618

OCTA
550 S. MAIN STREET
ORANGE, CA 92863

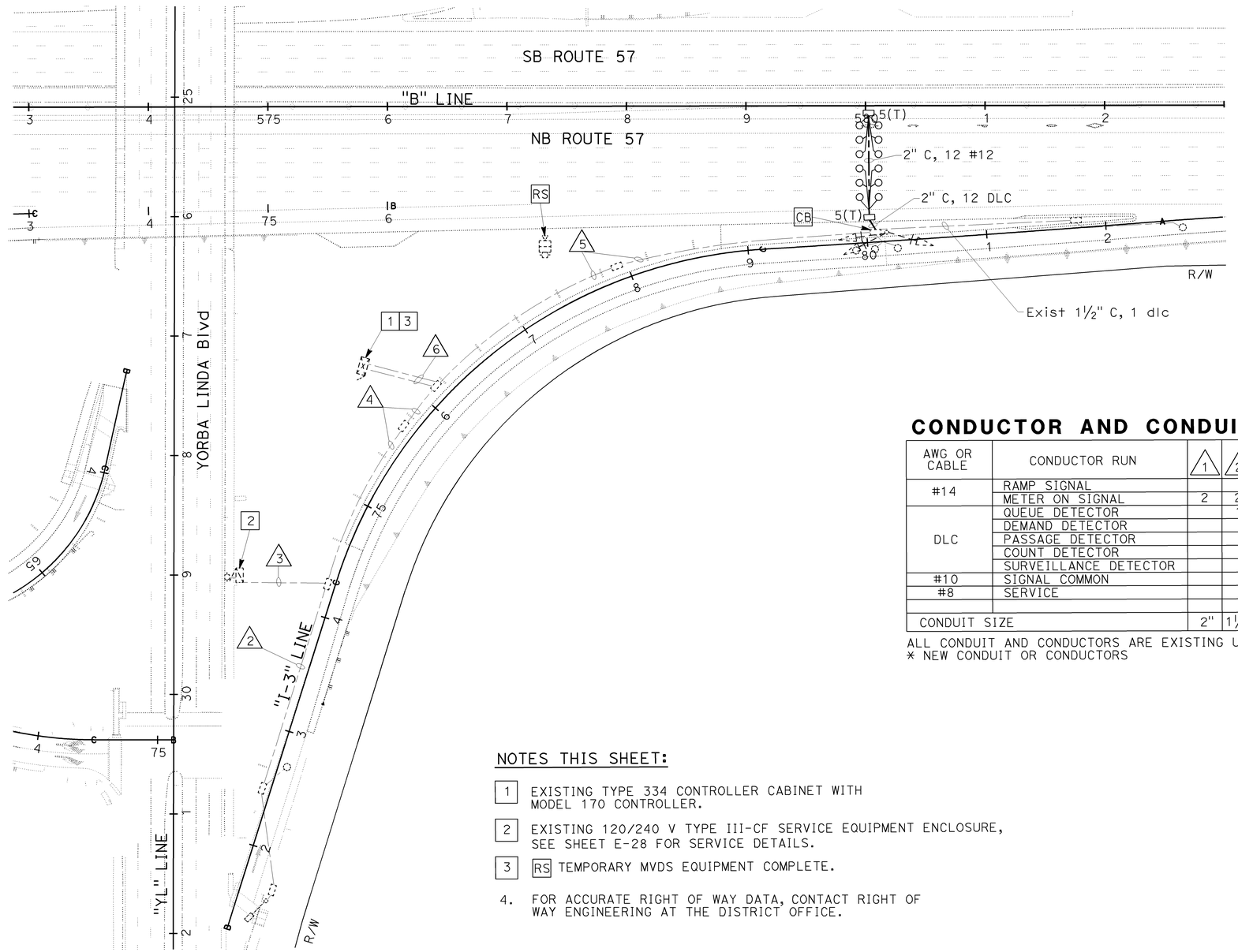

CONDUCTOR AND CONDUIT SCHEDULE

AWG OR CABLE	CONDUCTOR RUN	1	2	3	4	5	6
#14	RAMP SIGNAL					3	3
	METER ON SIGNAL	2	2		2		2
DLC	QUEUE DETECTOR		1		1		1
	DEMAND DETECTOR					1	1
	PASSAGE DETECTOR					1	1
	COUNT DETECTOR					1	1
	SURVEILLANCE DETECTOR					*12	*12
#10	SIGNAL COMMON					1	1
#8	SERVICE			2	2		2
CONDUIT SIZE		2"	1½"	1½"	2"	3"	2-3"

ALL CONDUIT AND CONDUCTORS ARE EXISTING UNLESS NOTED OTHERWISE.
* NEW CONDUIT OR CONDUCTORS

NOTES THIS SHEET:

1. EXISTING TYPE 334 CONTROLLER CABINET WITH MODEL 170 CONTROLLER.
2. EXISTING 120/240 V TYPE III-CF SERVICE EQUIPMENT ENCLOSURE, SEE SHEET E-28 FOR SERVICE DETAILS.
3. RS TEMPORARY MVDS EQUIPMENT COMPLETE.
4. FOR ACCURATE RIGHT OF WAY DATA, CONTACT RIGHT OF WAY ENGINEERING AT THE DISTRICT OFFICE.

RAMP METERING SYSTEM (LOCATION 4)

SCALE: 1" = 50'

E-60

THIS PLAN IS ACCURATE FOR ELECTRICAL WORK ONLY.

STATE OF CALIFORNIA - DEPARTMENT OF TRANSPORTATION
Caltrans
CONSULTANT FUNCTIONAL SUPERVISOR: MARK J. ESPOSITO
CALCULATED-DESIGNED BY: GARY TOLMIE
CHECKED BY: ARMANDO SOLIS
REVISED BY
DATE REVISED

H:\pdata\10105878\Admin\submittals\2009-06-29 FINAL Submittal\100% ELECTRONIC SUBMITTAL - MERGED\FDEES2009\12-14-09\traffic\c0F031ua060.dgn

LAST REVISION 08-01-08
DATE PLOTTED => 21-DEC-2009
TIME PLOTTED => 12:43

Dist	COUNTY	ROUTE	POST MILES TOTAL PROJECT	SHEET No.	TOTAL SHEETS
12	Ora	57	16.2/18.6	625	960

REGISTERED CIVIL ENGINEER 7/15/09 DATE

12-14-09
PLANS APPROVAL DATE

REGISTERED PROFESSIONAL ENGINEER ARMANDO SOLIS No. 72012 Exp. 6-30-10 CIVIL STATE OF CALIFORNIA

THE STATE OF CALIFORNIA OR ITS OFFICERS OR AGENTS SHALL NOT BE RESPONSIBLE FOR THE ACCURACY OR COMPLETENESS OF SCANNED COPIES OF THIS PLAN SHEET.

RBF CONSULTING
14275 ALTON PKWY
IRVINE, CA 92618

OCTA
550 S. MAIN STREET
ORANGE, CA 92863

NOTES:

1. MORTAR LEVELING BED NOT REQUIRED ON CRUSHED BASE, DIRT, OR WHEN SLOPE IS LESS THAN 2%. POLE SHALL BE SET PLUMB.
2. DRILL HOLES IN STEEL PLATE TO MATCH BASE PLATE BOLT CIRCLE.

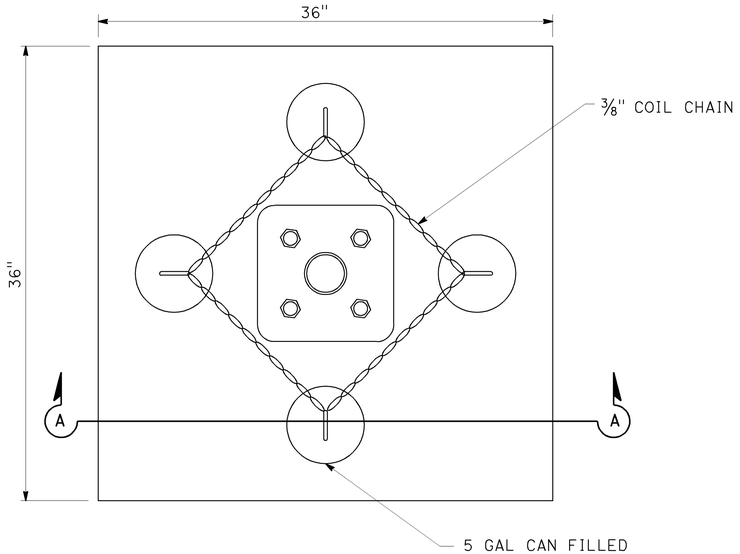

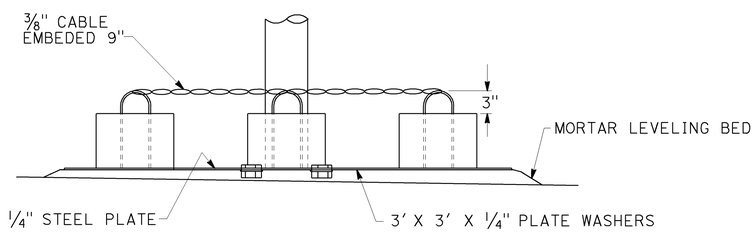

SECTION A-A

DETAIL A

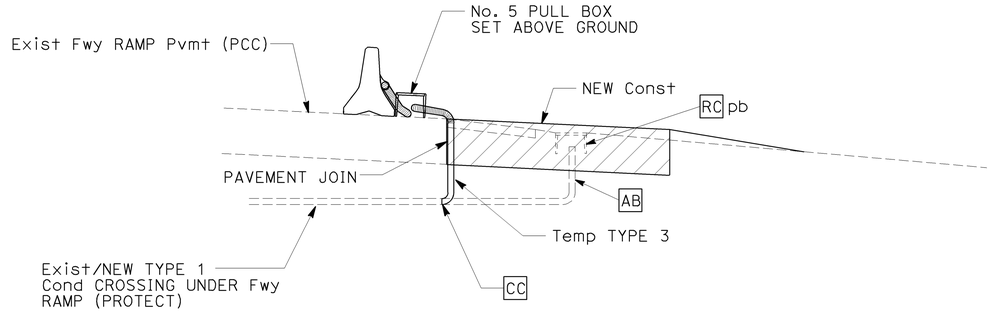

DETAIL B

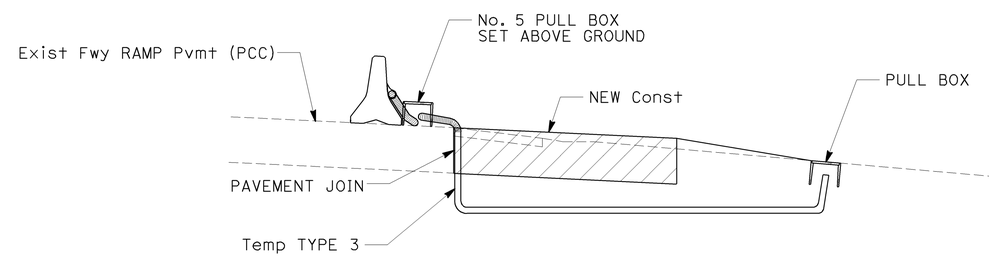

DETAIL C

RAMP METERING SYSTEM
(DETAILS)

NO SCALE

E-61

THIS PLAN IS ACCURATE FOR ELECTRICAL WORK ONLY.

STATE OF CALIFORNIA - DEPARTMENT OF TRANSPORTATION
Caltrans
CONSULTANT FUNCTIONAL SUPERVISOR: MARK J. ESPOSITO
CALCULATED-DESIGNED BY: GARY TOLMIE
CHECKED BY: ARMANDO SOLIS
REVISED BY
DATE REVISED

H:\pdata\10105878\Admin\submittals\2009-06-29 FINAL Submittal\100% ELECTRONIC SUBMITTAL - MERGED FILES\2009\21-Traffic\c0F031ua061.dgn

DATE PLOTTED => 21-DEC-2009
TIME PLOTTED => 12:43
LAST REVISION 08-01-08

Dist	COUNTY	ROUTE	POST MILES TOTAL PROJECT	SHEET No.	TOTAL SHEETS
12	Ora	57	16.2/18.6	626	960

REGISTERED CIVIL ENGINEER 7/15/09 DATE

12-14-09
PLANS APPROVAL DATE

REGISTERED PROFESSIONAL ENGINEER ARMANDO SOLIS No. 72012 Exp. 6-30-10 CIVIL STATE OF CALIFORNIA

THE STATE OF CALIFORNIA OR ITS OFFICERS OR AGENTS SHALL NOT BE RESPONSIBLE FOR THE ACCURACY OR COMPLETENESS OF SCANNED COPIES OF THIS PLAN SHEET.

RBF CONSULTING
14275 ALTON PKWY
IRVINE, CA 92618

OCTA
550 S. MAIN STREET
ORANGE, CA 92863

NOTES (THIS SHEET):

1 - 1" RECESSED COUPLING, AWAY FROM APPROACHING TRAFFIC.

2 - 2" RECESSED COUPLING, AWAY FROM APPROACHING TRAFFIC.

3 - TYPE CCTV 25 POLE. SEE STANDARD PLAN ES-16A FOR POLE DETAILS.

4 - SENSOR UNIT DIRECTED TOWARD TRAFFIC LANES PER MANUFACTURER'S RECOMMENDATION.

5 - PHOTOVOLTAIC PANEL FACE SHALL BE DIRECTED DUE SOUTH. ATTACH HARDWARE TO PANEL PER MANUFACTURER'S RECOMMENDATIONS.

6 - SEE DETAIL E, SHEET E-62A FOR PHOTOVOLTAIC PANEL ATTACHMENT. PHOTOVOLTAIC PANEL SHALL BE PLACED WHERE OBSTRUCTIONS TO SUNLIGHT ARE AVOIDED.

7 - MOUNTING HEIGHT PER MANUFACTURER'S RECOMMENDATION AND ENGINEER'S APPROVAL.

8 - SEE DETAIL F AND G, SHEET E-62B FOR ENCLOSURE ATTACHMENT.

9 - SEE DETAIL D, FOR SENSOR UNIT ATTACHMENT.

10 - MOUNTING PLATE, ARTICULATING JOINT AND SENSOR UNIT ASSEMBLY CONNECTIONS PER MANUFACTURER'S RECOMMENDATIONS.

11 - PHOTOVOLTAIC PANEL MAXIMUM AREA IS 11 SQFT.

12 - EQUIPMENT AND BATTERY ENCLOSURE.

13 - CLASS 5, 40' TALL WOOD POLE (DOUGLAS-FIR-LARCH).

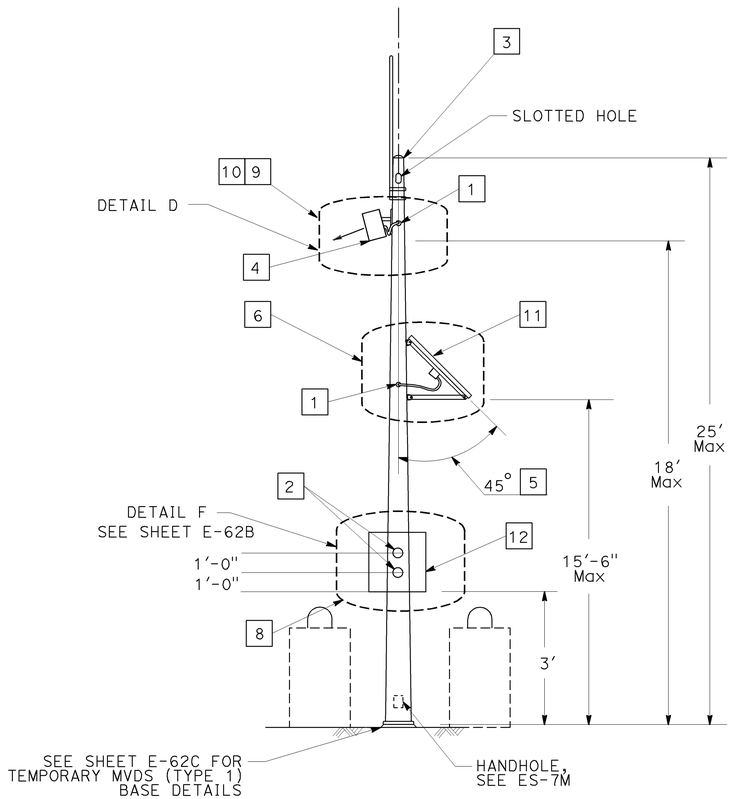

ELEVATION

MICROWAVE VEHICLE DETECTION SYSTEM (TYPE 1) DETAIL WITH PHOTOVOLTAIC PANEL, 900 MHZ RADIO MODEM, ENCLOSURE, SENSOR UNIT, STEEL POLE AND TEMPORARY BASE

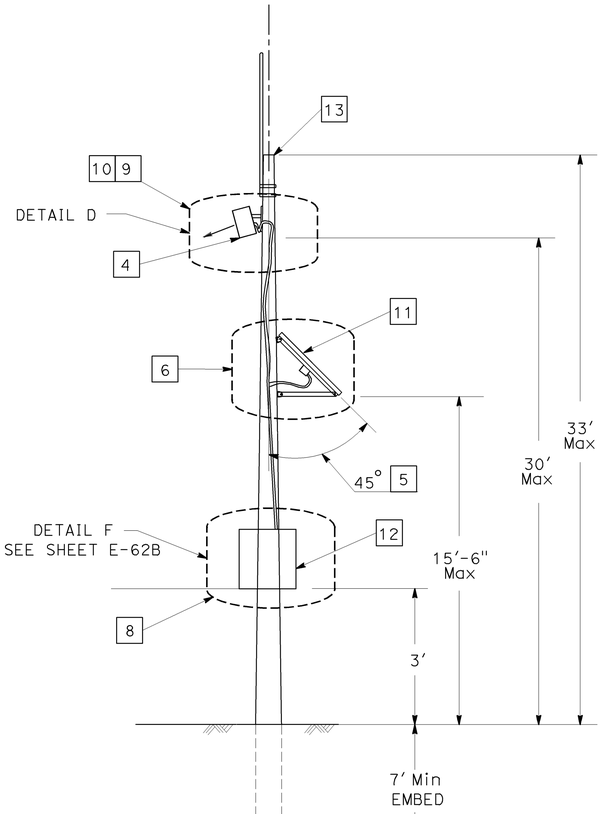

ELEVATION

MICROWAVE VEHICLE DETECTION SYSTEM (TYPE 2) DETAIL WITH PHOTOVOLTAIC PANEL, 900 MHZ RADIO MODEM, ENCLOSURE, SENSOR UNIT, AND EMBEDDED WOOD POLE

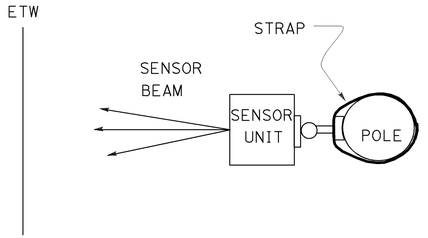

SECTION A-A

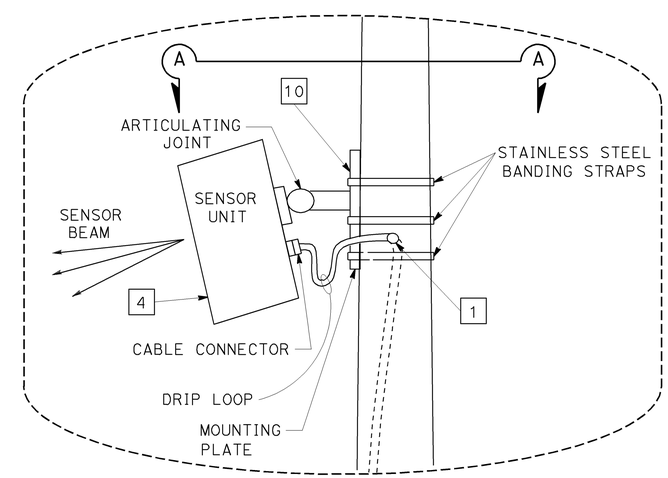

DETAIL D

RAMP METERING SYSTEM (DETAILS)

NO SCALE

E-62

THIS PLAN IS ACCURATE FOR ELECTRICAL WORK ONLY.

STATE OF CALIFORNIA - DEPARTMENT OF TRANSPORTATION
Caltrans
CONSULTANT FUNCTIONAL SUPERVISOR: MARK J. ESPOSITO
CALCULATED-DESIGNED BY: GARY TOLMIE
CHECKED BY: ARMANDO SOLIS
REVISED BY
DATE REVISED

H:\pdata\10105878\Admin\submittals\2009-06-29 FINAL Submittal\100% ELECTRONIC SUBMITTAL - MERGED FILES\2009\Traffic\c0F031ua062.dgn

LAST REVISION 08-01-08
DATE PLOTTED => 21-DEC-2009
TIME PLOTTED => 11:15

Dist	COUNTY	ROUTE	POST MILES TOTAL PROJECT	SHEET No.	TOTAL SHEETS
12	Ora	57	16.2/18.6	627	960

REGISTERED CIVIL ENGINEER 7/15/09 DATE

12-14-09
PLANS APPROVAL DATE

REGISTERED PROFESSIONAL ENGINEER ARMANDO SOLIS No. 72012 Exp. 6-30-10 CIVIL STATE OF CALIFORNIA

THE STATE OF CALIFORNIA OR ITS OFFICERS OR AGENTS SHALL NOT BE RESPONSIBLE FOR THE ACCURACY OR COMPLETENESS OF SCANNED COPIES OF THIS PLAN SHEET.

RBF CONSULTING
14275 ALTON PKWY
IRVINE, CA 92618

OCTA
550 S. MAIN STREET
ORANGE, CA 92863

NOTES (THIS SHEET):

1 - ATTACH "L" BRACE TO SOLAR PANEL FRAME PER MANUFACTURER'S RECOMMENDATION.

2 - JUNCTION BOX.

3 - ½"C, TYPE 4.

4 - 123 TO 130 WATT PHOTOVOLTAIC PANEL, WEIGHT SHALL NOT EXCEED 31 lbs.

5 - "U" CHANNEL WITH ANGLE BRACKET.

6 - PHOTOVOLTAIC PANEL FACE.

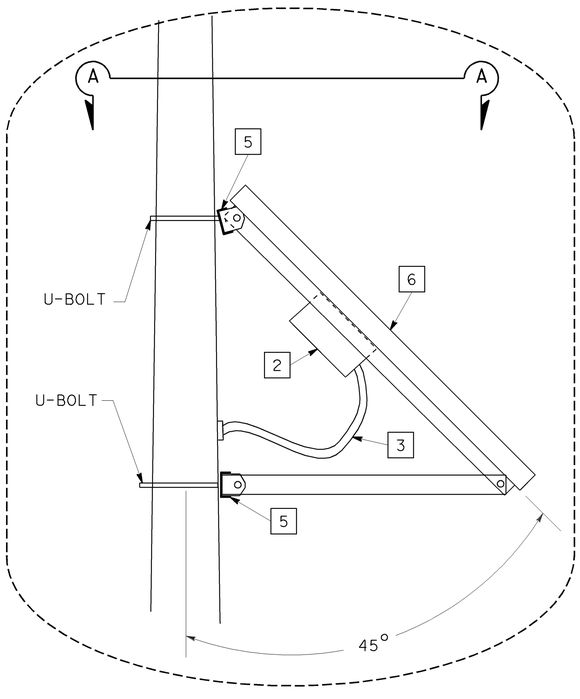

DETAIL E

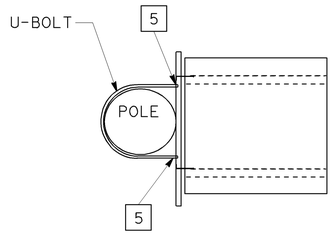

SECTION A-A

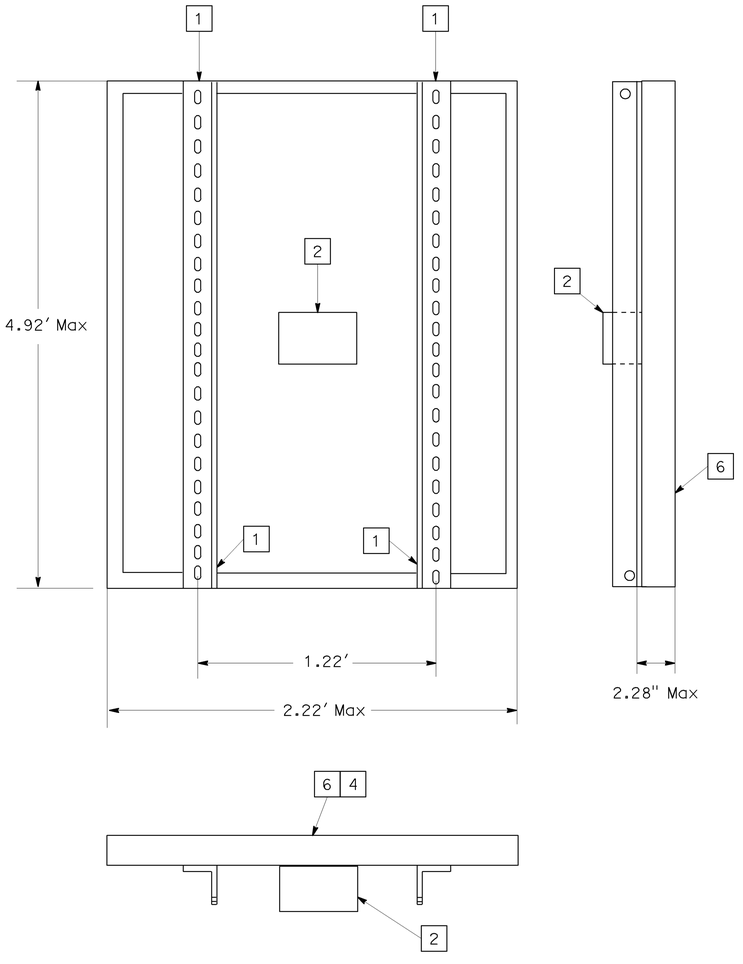

123 TO 130 WATT SOLAR PANEL

RAMP METERING SYSTEM
(DETAILS)

NO SCALE

E-62A

THIS IS PLAN ACCURATE FOR ELECTRICAL WORK ONLY.

STATE OF CALIFORNIA - DEPARTMENT OF TRANSPORTATION
Caltrans

CONSULTANT FUNCTIONAL SUPERVISOR: MARK J. ESPOSITO
CALCULATED-DESIGNED BY: GARY TOLMIE
CHECKED BY: ARMANDO SOLIS
REVISED BY
DATE REVISED

H:\pdata\10105878\Admin\submittals\2009-06-29 FINAL Submittal\100% ELECTRONIC SUBMITTAL - MERGED FILES\2009\Traffic\c0F031ua062A.dgn

LAST REVISION 08-01-08
DATE PLOTTED => 21-DEC-2009
TIME PLOTTED => 11:15

Dist	COUNTY	ROUTE	POST MILES TOTAL PROJECT	SHEET No.	TOTAL SHEETS
12	Ora	57	16.2/18.6	628	960

REGISTERED CIVIL ENGINEER 7/15/09 DATE

12-14-09
PLANS APPROVAL DATE

REGISTERED PROFESSIONAL ENGINEER ARMANDO SOLIS No. 72012 Exp. 6-30-10 CIVIL STATE OF CALIFORNIA

THE STATE OF CALIFORNIA OR ITS OFFICERS OR AGENTS SHALL NOT BE RESPONSIBLE FOR THE ACCURACY OR COMPLETENESS OF SCANNED COPIES OF THIS PLAN SHEET.

RBF CONSULTING
14275 ALTON PKWY
IRVINE, CA 92618

OCTA
550 S. MAIN STREET
ORANGE, CA 92863

NOTE (THIS SHEET):

1 - 2" RECESSED COUPLING.

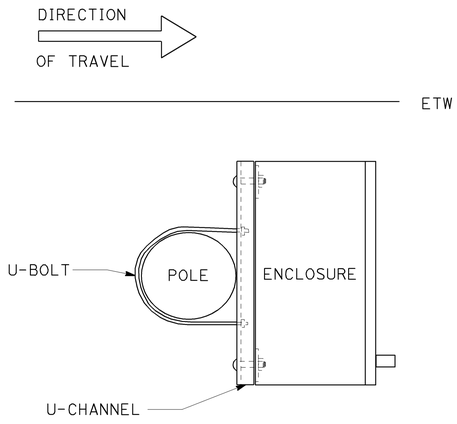

SECTION A-A

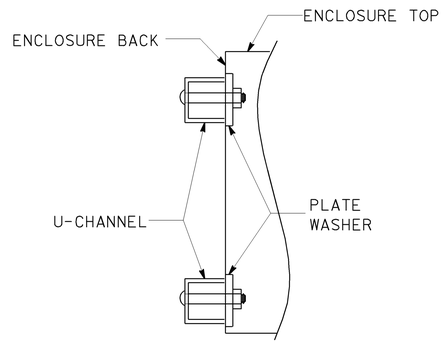

SECTION B-B

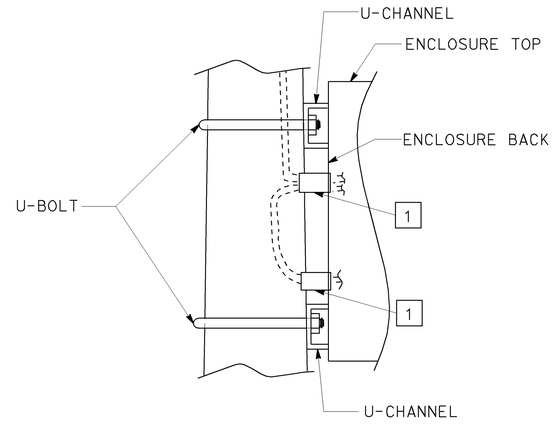

SECTION C-C

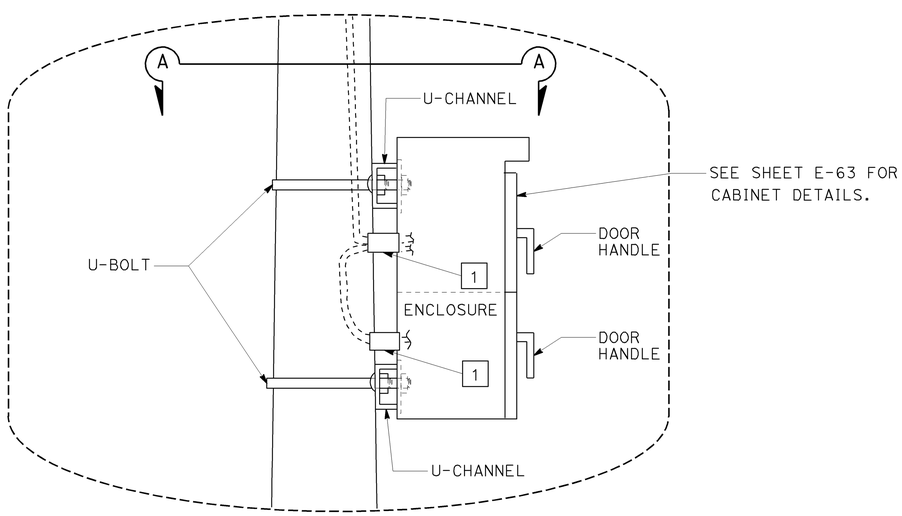

DETAIL F

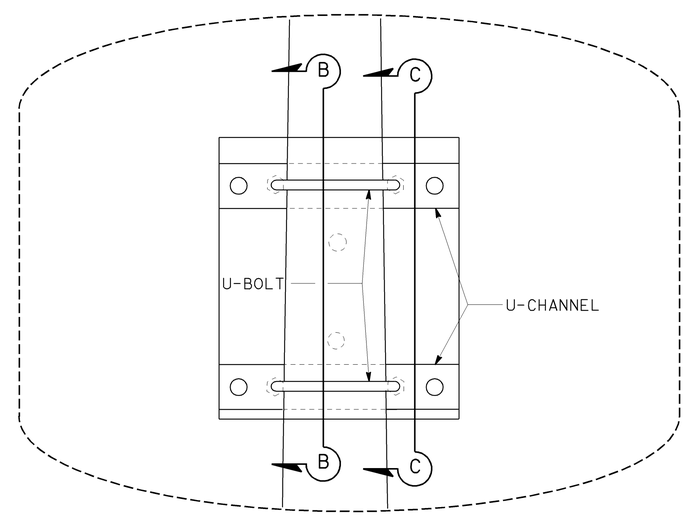

DETAIL G

RAMP METERING SYSTEM
(DETAILS)

NO SCALE

THIS PLAN IS ACCURATE FOR ELECTRICAL WORK ONLY.

E-62B

STATE OF CALIFORNIA - DEPARTMENT OF TRANSPORTATION
Caltrans
CONSULTANT FUNCTIONAL SUPERVISOR: MARK J. ESPOSITO
CALCULATED-DESIGNED BY: GARY TOLMIE
CHECKED BY: ARMANDO SOLIS
REVISED BY
DATE REVISED

H:\pdata\10105878\Admin\submittals\2009-06-29 FINAL Submittal\100% ELECTRONIC SUBMITTAL - MERGED FILES\2009\Traffic\c0F031ua062B.dgn

LAST REVISION 08-01-08
DATE PLOTTED => 21-DEC-2009
TIME PLOTTED => 11:15

Dist	COUNTY	ROUTE	POST MILES TOTAL PROJECT	SHEET No.	TOTAL SHEETS
12	Ora	57	16.2/18.6	629	960

REGISTERED CIVIL ENGINEER — DATE 7/15/09

ARMANDO SOLIS No. 72012 Exp. 6-30-10 CIVIL — REGISTERED PROFESSIONAL ENGINEER — STATE OF CALIFORNIA

12-14-09
PLANS APPROVAL DATE

THE STATE OF CALIFORNIA OR ITS OFFICERS OR AGENTS SHALL NOT BE RESPONSIBLE FOR THE ACCURACY OR COMPLETENESS OF SCANNED COPIES OF THIS PLAN SHEET.

RBF CONSULTING
14275 ALTON PKWY
IRVINE, CA 92618

OCTA
550 S. MAIN STREET
ORANGE, CA 92863

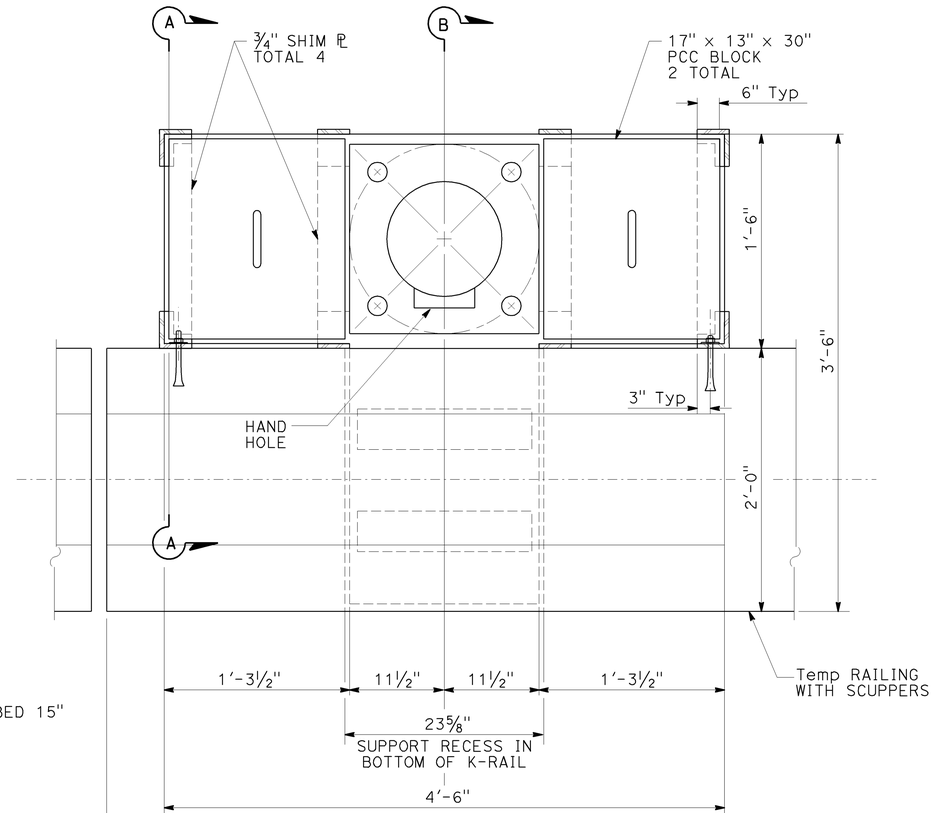

PLAN

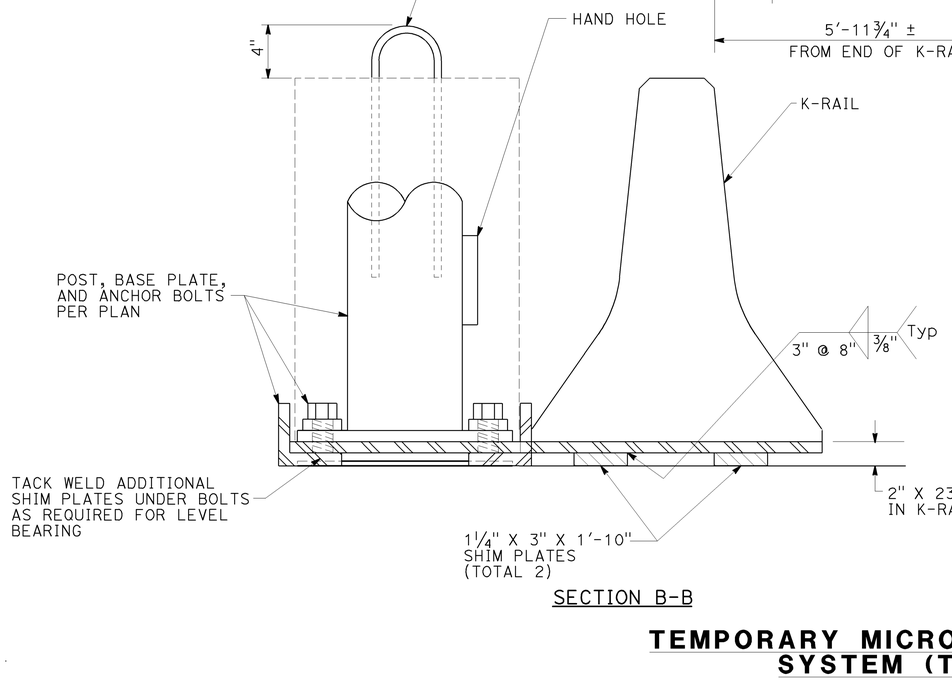

SECTION B-B

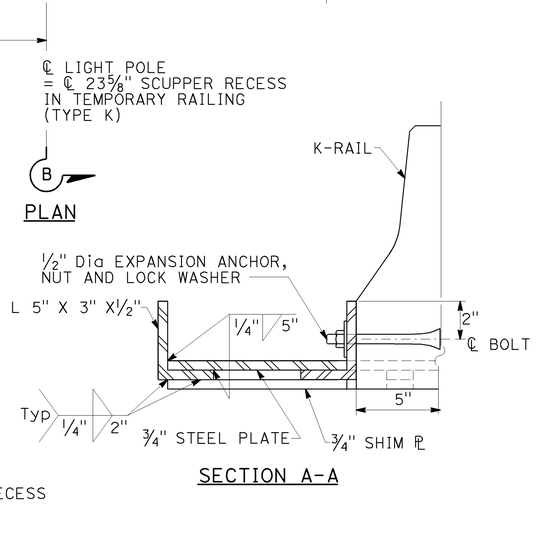

SECTION A-A

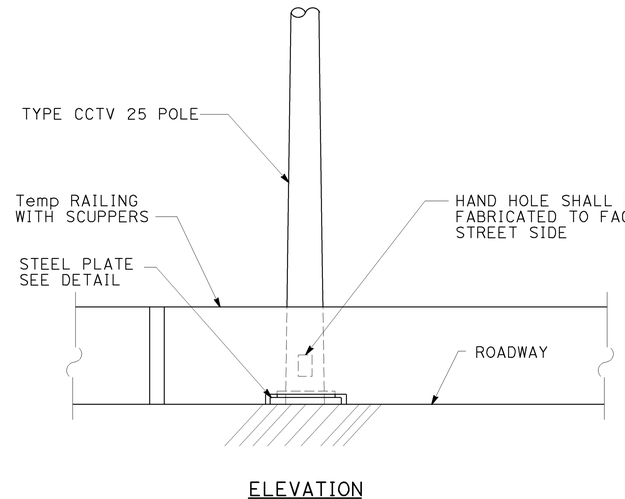

ELEVATION

TEMPORARY MICROWAVE VEHICLE DETECTION SYSTEM (TYPE 1) BASE DETAIL

THIS PLAN IS ACCURATE FOR ELECTRICAL WORK ONLY.

RAMP METERING SYSTEM (DETAILS)

NO SCALE

E-62C

LAST REVISION | DATE PLOTTED => 21-DEC-2009
08-01-08 | TIME PLOTTED => 11:15

H:\pdata\10105878\Admin\submittals\2009-06-29 FINAL Submittal\100% ELECTRONIC SUBMITTAL - MERGED\DESIGN\Traffic\c0F031ua062C.dgn

STATE OF CALIFORNIA - DEPARTMENT OF TRANSPORTATION
Caltrans

CONSULTANT FUNCTIONAL SUPERVISOR: MARK J. ESPOSITO
CALCULATED-DESIGNED BY: MIKE HONDA
CHECKED BY: ARMANDO SOLIS
REVISED BY | DATE REVISED

BORDER LAST REVISED 4/11/2008

RELATIVE BORDER SCALE IS IN INCHES 0 1 2 3

USERNAME => trmnguye
DGN FILE => c0F031ua062C.dgn

CU 12220

EA 0F0311

Dist	COUNTY	ROUTE	POST MILES TOTAL PROJECT	SHEET No.	TOTAL SHEETS
12	Ora	57	16.2/18.6	630	960

REGISTERED CIVIL ENGINEER 7/15/09 DATE

12-14-09
PLANS APPROVAL DATE

REGISTERED PROFESSIONAL ENGINEER ARMANDO SOLIS No. 72012 Exp. 6-30-10 CIVIL STATE OF CALIFORNIA

THE STATE OF CALIFORNIA OR ITS OFFICERS OR AGENTS SHALL NOT BE RESPONSIBLE FOR THE ACCURACY OR COMPLETENESS OF SCANNED COPIES OF THIS PLAN SHEET.

RBF CONSULTING
14275 ALTON PKWY
IRVINE, CA 92618

OCTA
550 S. MAIN STREET
ORANGE, CA 92863

NOTES (THIS SHEET):

1 - THE CONTRACTOR SHALL VERIFY ALL CONTROLLING FIELD DIMENSIONS BEFORE ORDERING OR FABRICATING MATERIAL.

2 - FILTERED VENTILATION LOUVERS.

3 - ALUMINUM SHELF REQUIRED FOR EQUIPMENT. 2" SPACE BETWEEN SHELF AND ENCLOSURE BACK WALL REQUIRED.

4 - KEY LOCK AND AND THREE POINT LOCKING SYSTEM SHALL BE INTEGRATED WITH DOOR HANDLE. ROLLERS SHALL BE USED IN CONJUNCTION WITH THE THREE POINT LOCKING SYSTEM.

5 - DOOR HINGE.

6 - SEE SHEET E-63A FOR EQUIPMENT CONNECTION DIAGRAM.

7 - TYPE 5052-H32 ALUMINUM ENCLOSURE WALLS, DOORS AND SHELVES SHALL BE 1/8" THICK UNLESS OTHERWISE SHOWN.

8 - ALUMINUM SHELF REQUIRED TO PROVIDE SEPARATION OF THE EQUIPMENT AND BATTERY COMPARTMENTS. THE SHELF EDGE SHALL EXTEND TO ALL FOUR ENCLOSURE WALLS. SPACES BETWEEN THE SHELF AND ENCLOSURE WALLS SHALL BE SEALED.

9 - DOOR HANDLE TO ENCLOSURE PADLOCK LATCH.

10 - SEAL OPENING AROUND CONDUCTORS.

11 - BACK MOUNTING BOARD (1/2" THICK AND GRADE ACX PLYWOOD).

12 - SEE SHEET E-62B FOR ENCLOSURE MOUNTING DETAILS.

13 - TYPE 5052-H32 ALUMINUM SHALL BE 1/4" THICK, BOTTOM AND BACK WALL OF ENCLOSURE.

14 - INSTALL ANTENNA CABLE.

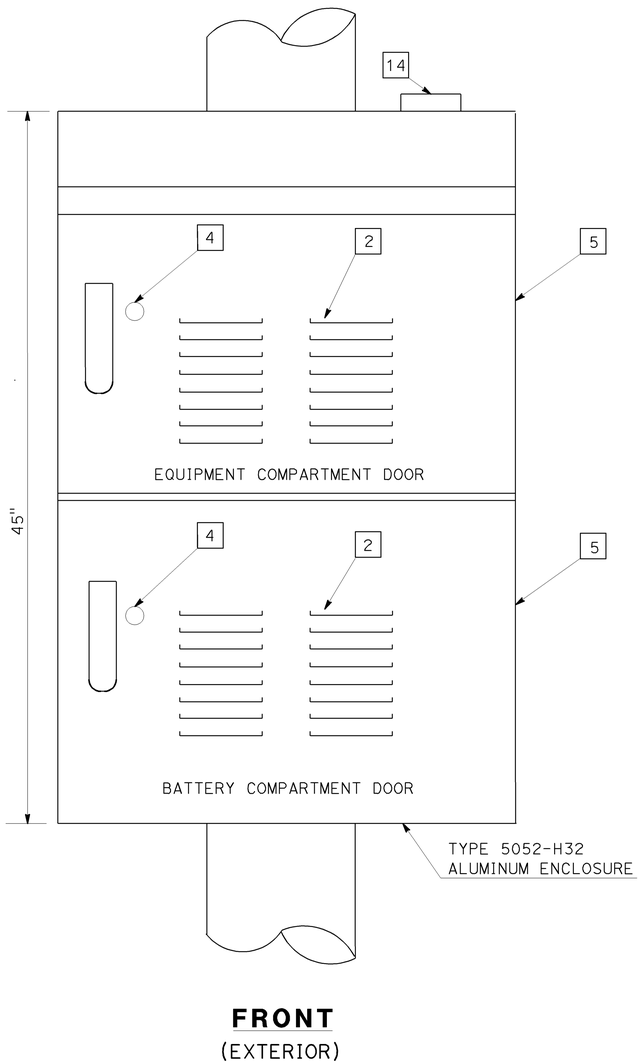

FRONT
(EXTERIOR)

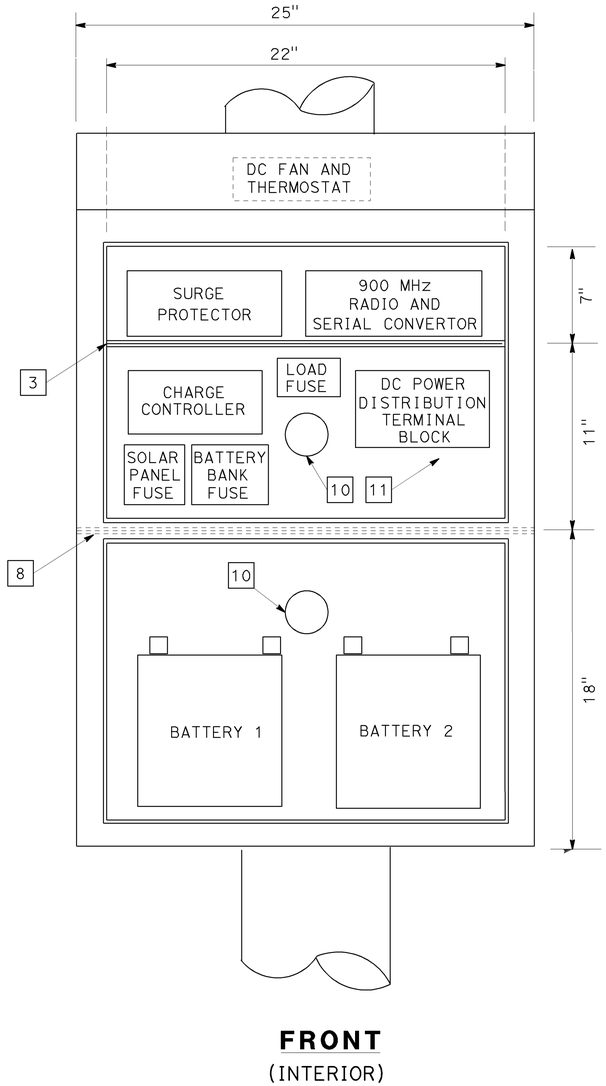

FRONT
(INTERIOR)

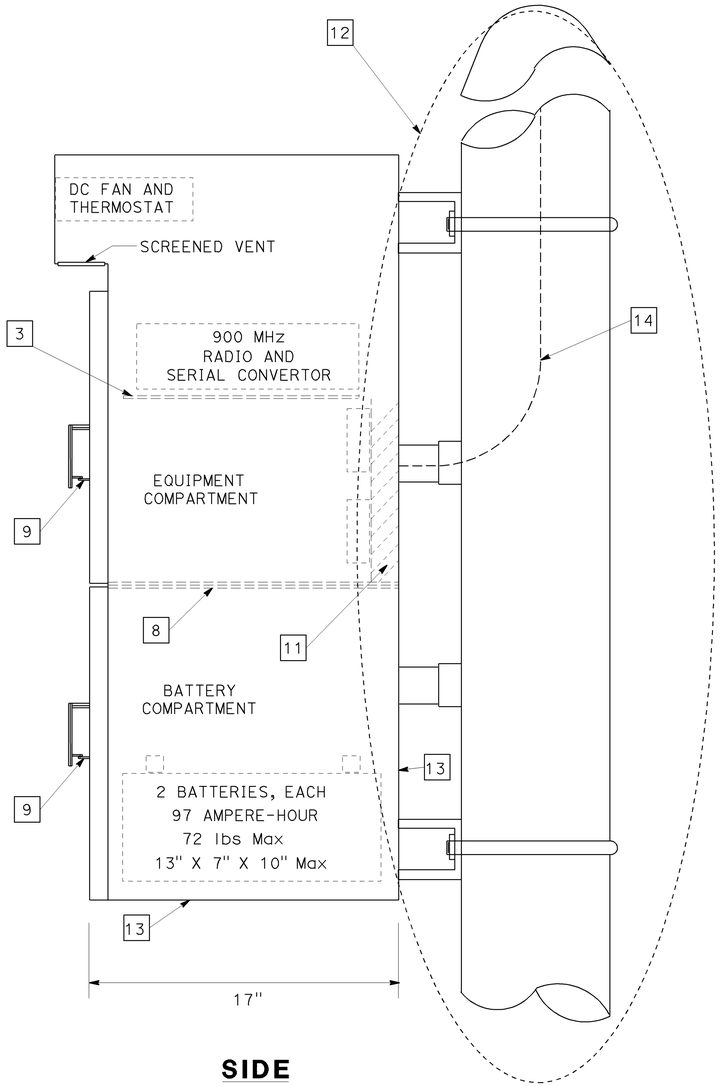

SIDE

POLE MOUNTED EQUIPMENT ENCLOSURE AND EQUIPMENT LAYOUT DETAIL

THIS PLAN IS ACCURATE FOR ELECTRICAL WORK ONLY.

RAMP METERING SYSTEM (DETAILS)

NO SCALE

E-63

STATE OF CALIFORNIA - DEPARTMENT OF TRANSPORTATION
Caltrans
CONSULTANT FUNCTIONAL SUPERVISOR: MARK J. ESPOSITO
CALCULATED-DESIGNED BY: GARY TOLMIE
CHECKED BY: ARMANDO SOLIS
REVISED BY
DATE REVISED

H:\pdata\10105878\Admin\submittals\2009-06-29 FINAL Submittal\100% ELECTRONIC SUBMITTAL - MERGED FILES\2009\Traffic\c0F031ua063.dgn

LAST REVISION 08-01-08
DATE PLOTTED => 21-DEC-2009
TIME PLOTTED => 11:15

Dist	COUNTY	ROUTE	POST MILES TOTAL PROJECT	SHEET No.	TOTAL SHEETS
12	Ora	57	16.2/18.6	631	960

REGISTERED CIVIL ENGINEER 7/15/09 DATE

12-14-09
PLANS APPROVAL DATE

REGISTERED PROFESSIONAL ENGINEER ARMANDO SOLIS No. 72012 Exp. 6-30-10 CIVIL STATE OF CALIFORNIA

THE STATE OF CALIFORNIA OR ITS OFFICERS OR AGENTS SHALL NOT BE RESPONSIBLE FOR THE ACCURACY OR COMPLETENESS OF SCANNED COPIES OF THIS PLAN SHEET.

RBF CONSULTING
14275 ALTON PKWY
IRVINE, CA 92618

OCTA
550 S. MAIN STREET
ORANGE, CA 92863

NOTES (THIS SHEET):

1 - MVDS TERMINAL BLOCK, INSTALL SIZE AS REQUIRED.
2 - INSTALL MICROWAVE SENSOR UNIT
3 - INSTALL COMMUNICATIONS INTERFACE AS REQUIRED.
4 - GROUNDING LUG BONDED TO ENCLOSURE.
5 - INSTALL GROUNDING ELECTRODE ADJACENT TO TEMPORARY POLE (WOOD POLE ONLY).
6 - GROUND CHARGE CONTROLLER PER MANUFACTURER'S RECOMMENDATION.

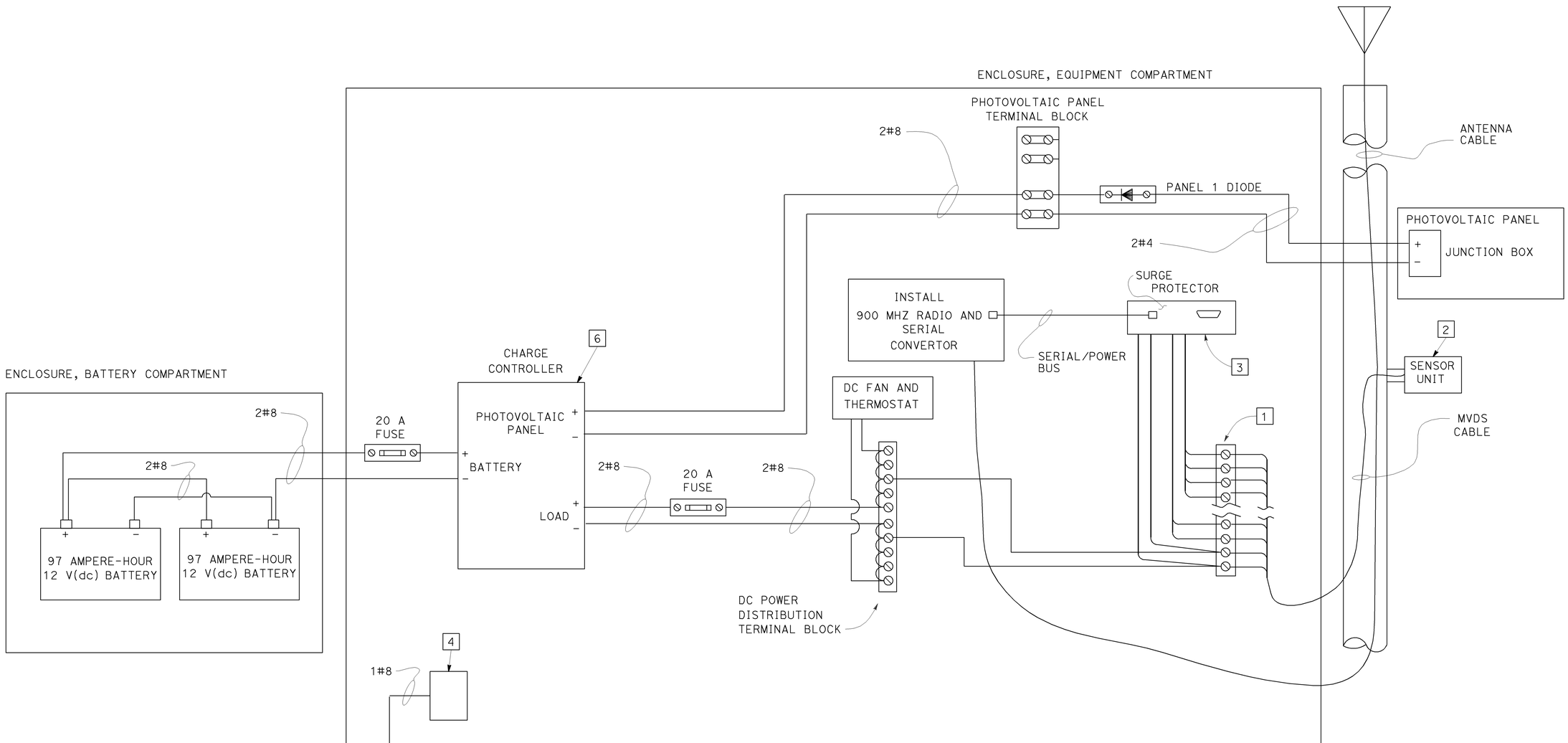

POLE MOUNTED CABINET CONNECTIONS
DETAIL "H"

THIS PLAN IS ACCURATE FOR ELECTRICAL WORK ONLY.

RAMP METERING SYSTEM
(DETAILS)

NO SCALE

E-63A

STATE OF CALIFORNIA - DEPARTMENT OF TRANSPORTATION
Caltrans
CONSULTANT FUNCTIONAL SUPERVISOR: MARK J. ESPOSITO
CALCULATED-DESIGNED BY: GARY TOLMIE
CHECKED BY: ARMANDO SOLIS
REVISED BY
DATE REVISED

H:\pdata\10105878\Admin\submittals\2009-06-29 FINAL Submittal\100% ELECTRONIC SUBMITTAL - MERGED FILES2009\Traffic\c0F031ua063A.dgn

LAST REVISION 08-01-08
DATE PLOTTED => 21-DEC-2009
TIME PLOTTED => 11:15

Dist	COUNTY	ROUTE	POST MILES TOTAL PROJECT	SHEET No.	TOTAL SHEETS
12	Ora	57	16.2/18.6	632	960

REGISTERED CIVIL ENGINEER — DATE 7/15/09

REGISTERED PROFESSIONAL ENGINEER — ARMANDO SOLIS — No. 72012 — Exp. 6-30-10 — CIVIL — STATE OF CALIFORNIA

12-14-09
PLANS APPROVAL DATE

THE STATE OF CALIFORNIA OR ITS OFFICERS OR AGENTS SHALL NOT BE RESPONSIBLE FOR THE ACCURACY OR COMPLETENESS OF SCANNED COPIES OF THIS PLAN SHEET.

RBF CONSULTING
14275 ALTON PKWY
IRVINE, CA 92618

OCTA
550 S. MAIN STREET
ORANGE, CA 92863

NOTE:

1. FOR LOOP INSTALLATION PROCEDURE SEE STANDARD PLANS RSP ES-5A AND ES-5B.

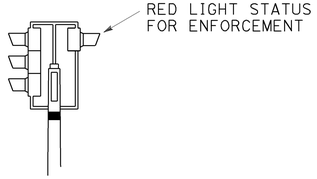

CHP ENFORCEMENT HEAD DETAIL

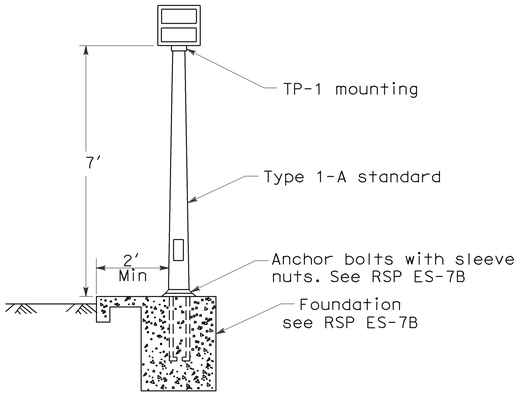

INTERNALLY ILLUMINATED "METER ON" SIGN DETAIL

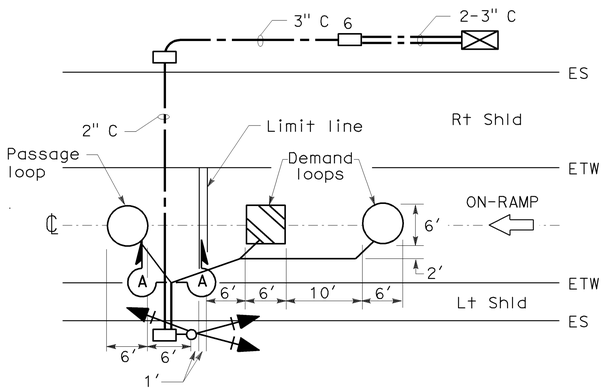

TYPICAL SINGLE-LANE RAMP METERING INSTALLATION

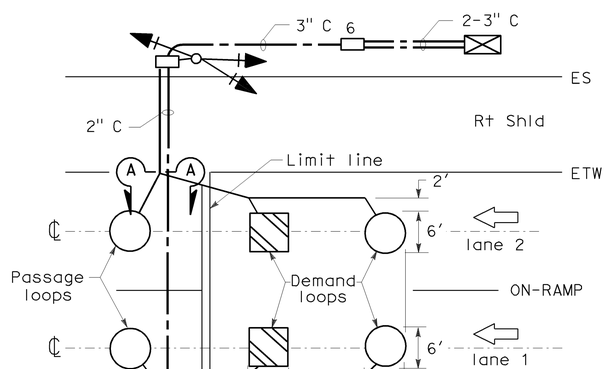

TYPICAL 2-LANE RAMP METERING INSTALLATION

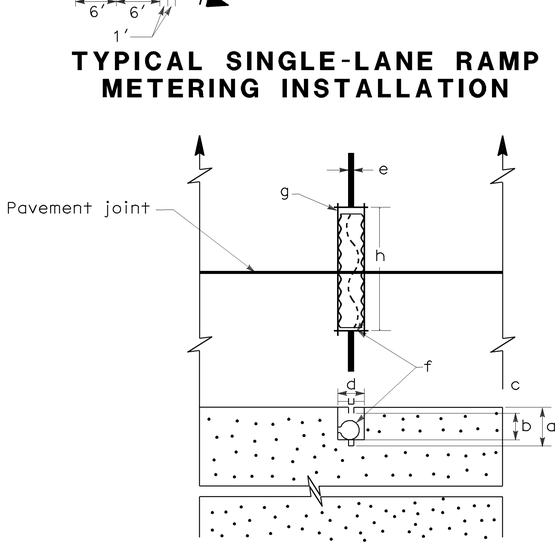

SECTION A-A

TYPICAL LOOP LEAD-IN CABLE DETAIL AT PAVEMENT JOINT

NOTES (LOOP DETECTOR):

a. Saw-cut depth to accommodate specified number of conductors with minimum of ¾" from top of wire to pavement surface (1" Max)

b. Slot saw-cut depth to accomodate 1" Type 3 conduit with ½" minimum from top of conduit to pavement surface

c. ½" minimum between top of conduit and pavement surface

d. Saw-cut width to accomodate 1" Type 3 conduit with ⅛" clearance

e. Saw-cut ⅜" wide (Max)

f. 1" Type 3 conduit. 6" long, Plug both ends with caulking compound to keep out epoxy

g. Conductors with ½" minimum slack

h. Saw-cut length of slot ⅛" longer than conduit

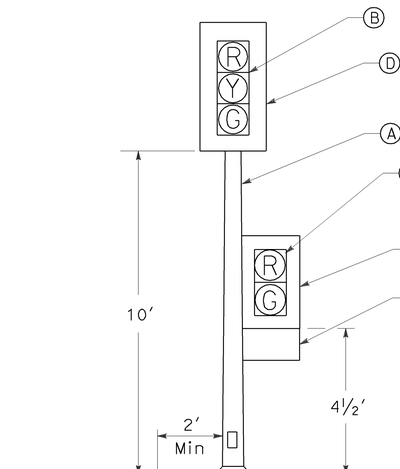

RAMP METERING SIGNAL

NOTES (RAMP METERING SIGNAL):

Ⓐ Type 1-A standard. Install anchor bolts with sleeve nuts. (See RSP ES-7B)

Ⓑ 3-section 12 inch signal head (red, yellow, green). 18" X 12" angled visors are required where shown on the plan. Type TV-1-T post-top mounting. 1-8" red indication on opposite side of pole for CHP enforcement where shown on plans

Ⓒ 2-section, 8" signal head (red,green), 8" full circle visor Type SV-1-T bracket mounting on side of standard away from traffic

Ⓓ Backplate

Ⓔ R89(CA) SERIES sign. Mounted on the back plate and centered between green section and bottom of back plate. Attach with ¼" aluminum blind rivets or galvanized ¼" X ¾" bolts, Hex nuts, plain and lock washers. Use R89(CA) for single lane R89-1(CA) for two lane ramps

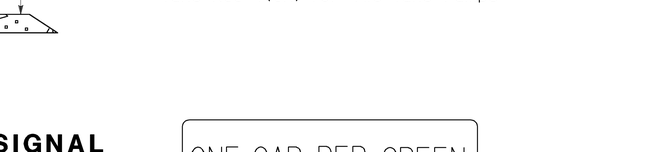

R89(CA) SERIES SIGNS

RAMP METERING SYSTEM (DETAILS)

NO SCALE

E-64

THIS PLAN IS ACCURATE FOR ELECTRICAL WORK ONLY.

H:\pdata\10105878\Admin\submittals\2009-06-29 FINAL Submittal\100% ELECTRONIC SUBMITTAL - MERGED FILES\Traffic\cOF031ua064.dgn

STATE OF CALIFORNIA - DEPARTMENT OF TRANSPORTATION
Caltrans
CONSULTANT FUNCTIONAL SUPERVISOR: MARK J. ESPOSITO
CALCULATED-DESIGNED BY: GARY TOLMIE
CHECKED BY: ARMANDO SOLIS
REVISED BY
DATE REVISED

BORDER LAST REVISED 4/11/2008
RELATIVE BORDER SCALE IS IN INCHES 0 1 2 3
USERNAME => trmnguye
DGN FILE => cOF031ua064.dgn
CU 12220
EA 0F0311
LAST REVISION 08-01-08
DATE PLOTTED => 21-DEC-2009
TIME PLOTTED => 11:15

Dist	COUNTY	ROUTE	POST MILES TOTAL PROJECT	SHEET No.	TOTAL SHEETS
12	Ora	57	16.2/18.6	633	960

REGISTERED CIVIL ENGINEER 7/15/09 DATE

12-14-09
PLANS APPROVAL DATE

REGISTERED PROFESSIONAL ENGINEER ARMANDO SOLIS No. 72012 Exp. 6-30-10 CIVIL STATE OF CALIFORNIA

THE STATE OF CALIFORNIA OR ITS OFFICERS OR AGENTS SHALL NOT BE RESPONSIBLE FOR THE ACCURACY OR COMPLETENESS OF SCANNED COPIES OF THIS PLAN SHEET.

RBF CONSULTING
14275 ALTON PKWY
IRVINE, CA 92618

OCTA
550 S. MAIN STREET
ORANGE, CA 92863

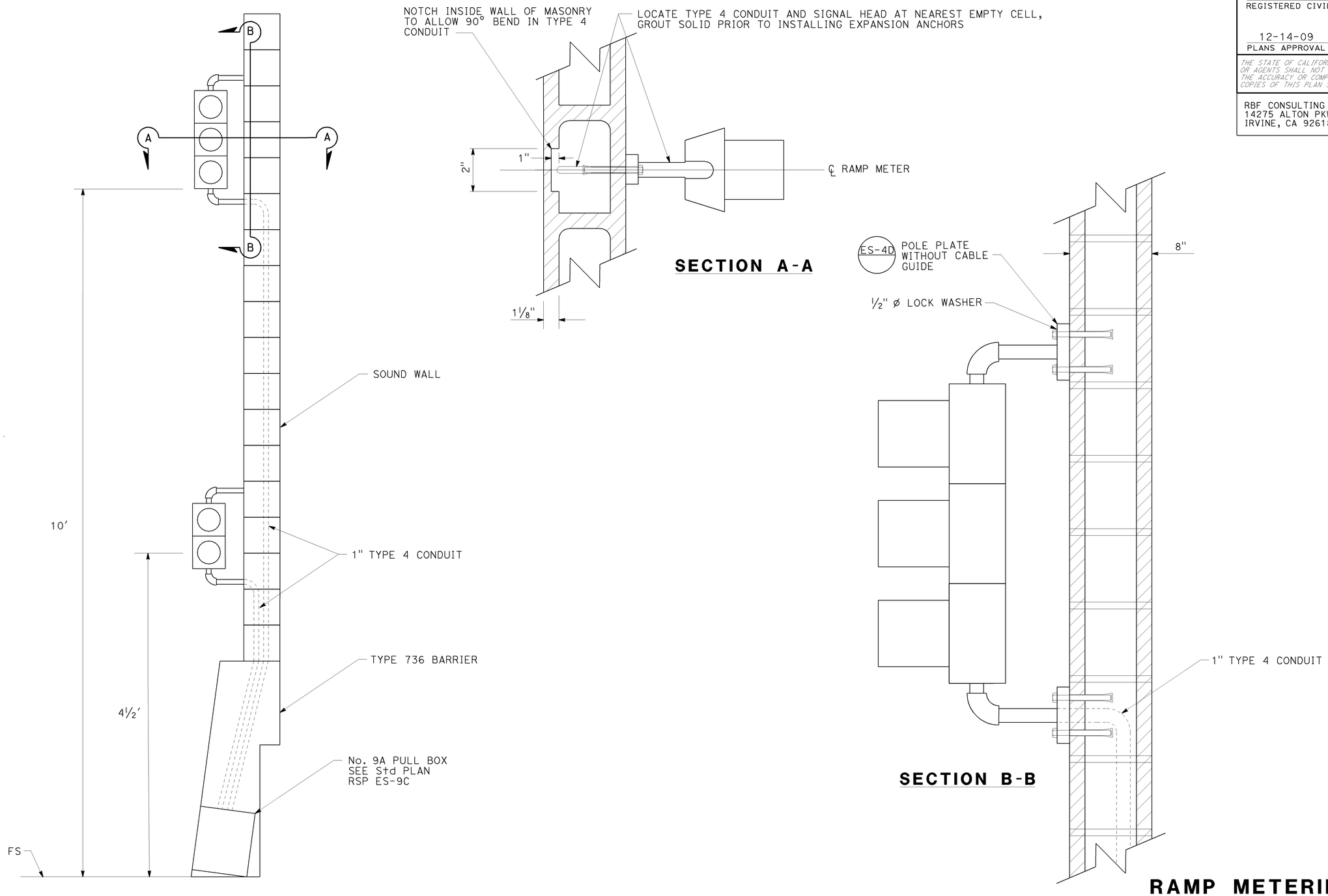

RAMP METERING SYSTEM
(DETAILS)

NO SCALE

E-65

THIS PLAN IS ACCURATE FOR ELECTRICAL WORK ONLY.

STATE OF CALIFORNIA - DEPARTMENT OF TRANSPORTATION
Caltrans
CONSULTANT FUNCTIONAL SUPERVISOR: MARK J. ESPOSITO
CALCULATED-DESIGNED BY: GARY TOLMIE
CHECKED BY: ARMANDO SOLIS
REVISED BY
DATE REVISED

H:\pdata\10105878\Admin\submittals\2009-06-29 FINAL Submittal\100% ELECTRONIC SUBMITTAL - MERGED1-DEES2009\Traffic\c0F031ua065.dgn

LAST REVISION 08-01-08
DATE PLOTTED => 21-DEC-2009
TIME PLOTTED => 11:15

Dist	COUNTY	ROUTE	POST MILES TOTAL PROJECT	SHEET No.	TOTAL SHEETS
12	Ora	57	16.2/18.6	634	960

REGISTERED CIVIL ENGINEER — 7/15/09 DATE

ARMANDO SOLIS No. 72012 Exp.6-30-10 CIVIL — REGISTERED PROFESSIONAL ENGINEER — STATE OF CALIFORNIA

12-14-09
PLANS APPROVAL DATE

THE STATE OF CALIFORNIA OR ITS OFFICERS OR AGENTS SHALL NOT BE RESPONSIBLE FOR THE ACCURACY OR COMPLETENESS OF SCANNED COPIES OF THIS PLAN SHEET.

RBF CONSULTING
14275 ALTON PKWY
IRVINE, CA 92618

OCTA
550 S. MAIN STREET
ORANGE, CA 92863

NOTES (THIS SHEET):

1. RELOCATE TYPE 334 CENSUS CABINET. SET CABINET ON TEMPORARY ABOVE GROUND BASE.
2. INSTALL TEMPORARY WOOD POLE WITH OVERHEAD SERVICE CONDUCTORS TO TEMPORARY TYPE 21 POLE (NO LMA). RUN SERVICE CONDUCTORS OVERHEAD TO CENSUS CABINET. SEE DETAIL C, SHEET E-20.
3. INTECEPT EXISTING CONDUIT CROSSING AND EXTEND INTO TEMPORARY No. 5 PULL BOX SET ABOVE GROUND. SEE DETAIL D, SHEET E-20.
4. SPACING OF LOOPS SHALL BE 14′ FROM LEADING EDGE TO LEADING EDGE.
5. INSTALL TEMPORARY 2½" TYPE 3 CONDUIT ALONG BACK OF TEMPORARY RAILING (TYPE K).
6. INSTALL TEMPORARY MODIFIED TYPE 21 POLE (NO LMA) ON TEMPORARY BASE (TYPE 1). SEE DETAIL SHEET E-17.
7. FOR ACCURATE RIGHT OF WAY DATA, CONTACT RIGHT OF WAY ENGINEERING AT THE DISTRICT OFFICE.

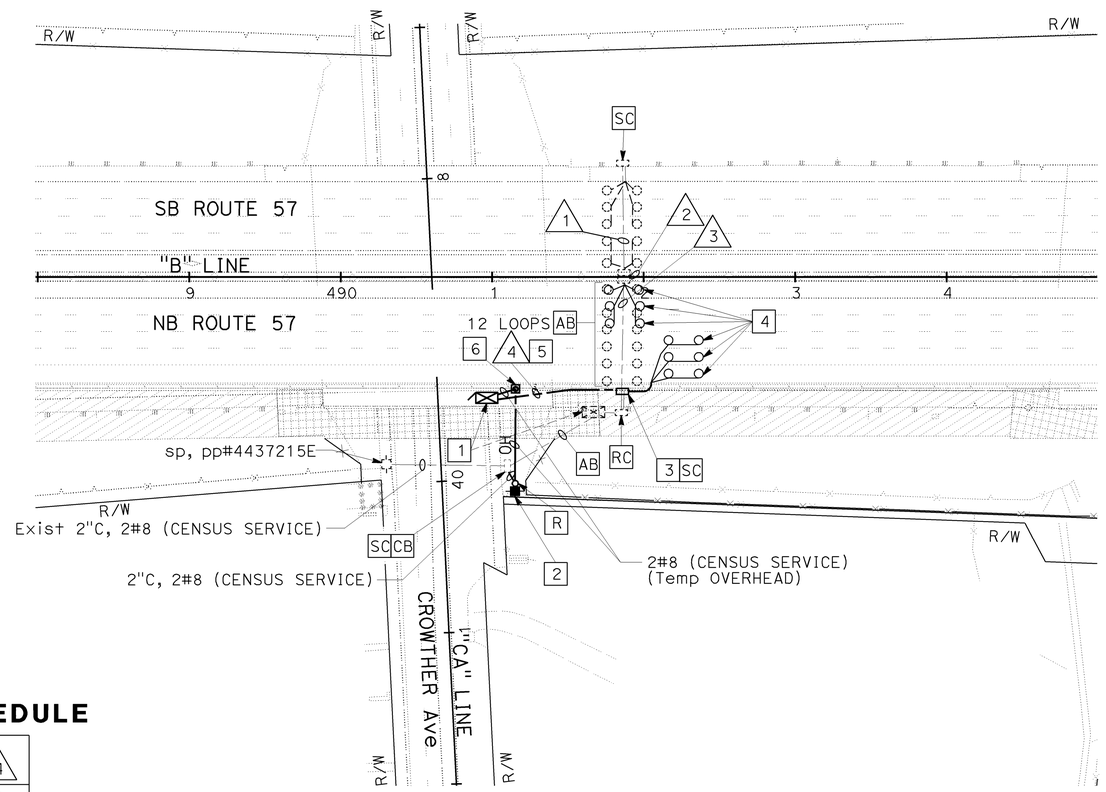

CONDUCTOR AND CONDUIT SCHEDULE

CONDUCTOR TYPE	△1	△2	△3	△4
TYPE 2 LOOP WIRE	-	8E	8E/12	-
TYPE C DLC	6	6	6	22
CONDUIT SIZE	2½"E	2½"E	2½"E	2½"

ALL CONDUITS AND CONDUCTORS ARE NEW UNLESS OTHERWISE NOTED:
E= EXISTING

THIS PLAN IS ACCURATE FOR ELECTRICAL WORK ONLY.

CENSUS STATION (LOCATION 1)

STAGE 1A

SCALE: 1" = 50′

E-66

REVISED BY	DATE REVISED

CALCULATED-DESIGNED BY: GARY TOLMIE
CHECKED BY: ARMANDO SOLIS
CONSULTANT FUNCTIONAL SUPERVISOR: MARK J. ESPOSITO
STATE OF CALIFORNIA - DEPARTMENT OF TRANSPORTATION

LAST REVISION DATE PLOTTED => 21-DEC-2009
LAST REVISION TIME PLOTTED => 11:16

U:\d0F031\mainline\RBF 100%Submittal\c0F031ua066.dgn
21-DEC-2009 11:16
trmnguye

BORDER LAST REVISED 4/11/2008

RELATIVE BORDER SCALE IS IN INCHES 0 1 2 3

USERNAME => trmnguye
DGN FILE => c0F031ua066.dgn

CU 12220

EA 0F0311

Dist	COUNTY	ROUTE	POST MILES TOTAL PROJECT	SHEET No.	TOTAL SHEETS
12	Ora	57	16.2/18.6	635	960

REGISTERED CIVIL ENGINEER — DATE 7/15/09

REGISTERED PROFESSIONAL ENGINEER — ARMANDO SOLIS — No. 72012 — Exp. 6-30-10 — CIVIL — STATE OF CALIFORNIA

12-14-09
PLANS APPROVAL DATE

THE STATE OF CALIFORNIA OR ITS OFFICERS OR AGENTS SHALL NOT BE RESPONSIBLE FOR THE ACCURACY OR COMPLETENESS OF SCANNED COPIES OF THIS PLAN SHEET.

RBF CONSULTING
14275 ALTON PKWY
IRVINE, CA 92618

OCTA
550 S. MAIN STREET
ORANGE, CA 92863

NOTES (THIS SHEET):

1 RELOCATE TYPE 334 CENSUS CONTROLLER CABINET.

2 SPACING OF LOOPS SHALL BE 14′ FROM LEADING EDGE TO LEADING EDGE.

3 RC EXISTING PULL BOX AND INSTALL NEW PULL BOX IN PLACE.

4. FOR ACCURATE RIGHT OF WAY DATA, CONTACT RIGHT OF WAY ENGINEERING AT THE DISTRICT OFFICE.

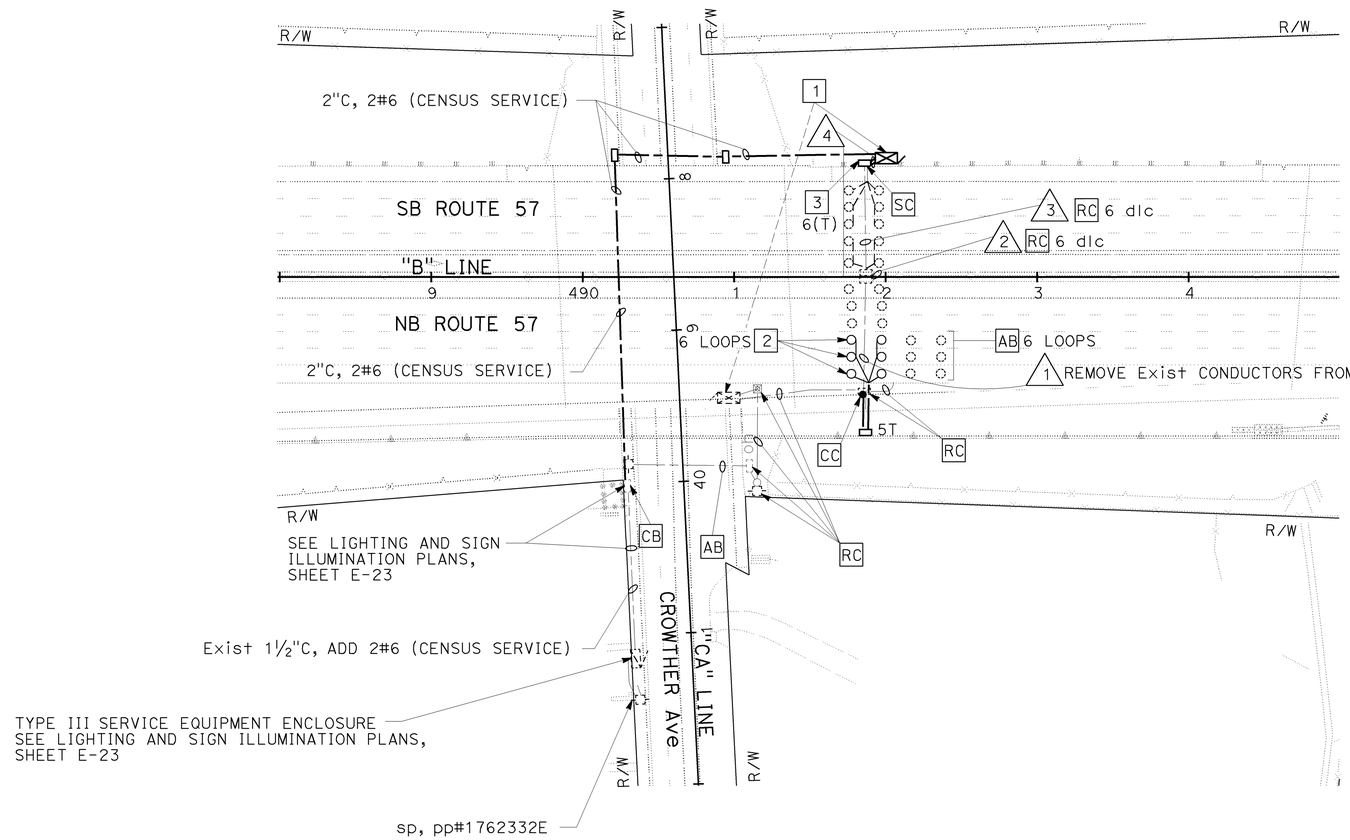

CONDUCTOR AND CONDUIT SCHEDULE

CONDUCTOR TYPE	1	2	3	4
TYPE 2 LOOP WIRE	-	12	8E/12	-
TYPE C DLC	6	6	6	22
CONDUIT SIZE	2½"E	2½"E	2½"E	2-3"

ALL CONDUCTORS NEW UNLESS OTHERWISE NOTED:
E = EXISTING

CENSUS STATION (LOCATION 1)

STAGE 2B

SCALE: 1" = 50′

THIS PLAN IS ACCURATE FOR ELECTRICAL WORK ONLY.

E-67

STATE OF CALIFORNIA - DEPARTMENT OF TRANSPORTATION — Caltrans
CONSULTANT FUNCTIONAL SUPERVISOR: MARK J. ESPOSITO
CALCULATED-DESIGNED BY: GARY TOLMIE
CHECKED BY: ARMANDO SOLIS
REVISED BY
DATE REVISED

H:\pdata\10105878\Admin\submittals\2009-06-29 FINAL Submittal\100% ELECTRONIC SUBMITTAL - MERGED\DESIGN\Traffic\c0F031ua067.dgn

LAST REVISION DATE PLOTTED => 21-DEC-2009
TIME PLOTTED => 11:16
08-01-08

BORDER LAST REVISED 4/11/2008 | RELATIVE BORDER SCALE IS IN INCHES 0 1 2 3 | USERNAME => trmnguye | DGN FILE => c0F031ua067.dgn | CU 12220 | EA 0F0311

Dist	COUNTY	ROUTE	POST MILES TOTAL PROJECT	SHEET No.	TOTAL SHEETS
12	Ora	57	16.2/18.6	636	960

REGISTERED CIVIL ENGINEER 7/15/09 DATE

12-14-09
PLANS APPROVAL DATE

REGISTERED PROFESSIONAL ENGINEER ARMANDO SOLIS No. 72012 Exp. 6-30-10 CIVIL STATE OF CALIFORNIA

THE STATE OF CALIFORNIA OR ITS OFFICERS OR AGENTS SHALL NOT BE RESPONSIBLE FOR THE ACCURACY OR COMPLETENESS OF SCANNED COPIES OF THIS PLAN SHEET.

RBF CONSULTING
14275 ALTON PKWY
IRVINE, CA 92618

OCTA
550 S. MAIN STREET
ORANGE, CA 92863

NOTE (THIS SHEET):

1. SPACING OF LOOPS SHALL BE 14' FROM LEADING EDGE TO LEADING EDGE.
2. RC NB MOVEMENT 12-TYPE 1 LOOP WIRES FROM STAGE 2B.
3. RC LOOP WIRES FROM STAGE 2B.
4. FOR ACCURATE RIGHT OF WAY DATA, CONTACT RIGHT OF WAY ENGINEERING AT THE DISTRICT OFFICE.

CONDUCTOR AND CONDUIT SCHEDULE

CONDUCTOR TYPE	1	2	3	4
TYPE 2 LOOP WIRE	-	12	8E/12	-
TYPE C DLC	6E/2	6E/2	6E/2	22E
CONDUIT SIZE	2½"E	2½"E	2½"E	2-3"E

ALL CONDUITS AND CONDUCTORS ARE NEW UNLESS OTHERWISE NOTED:
E - EXISTING

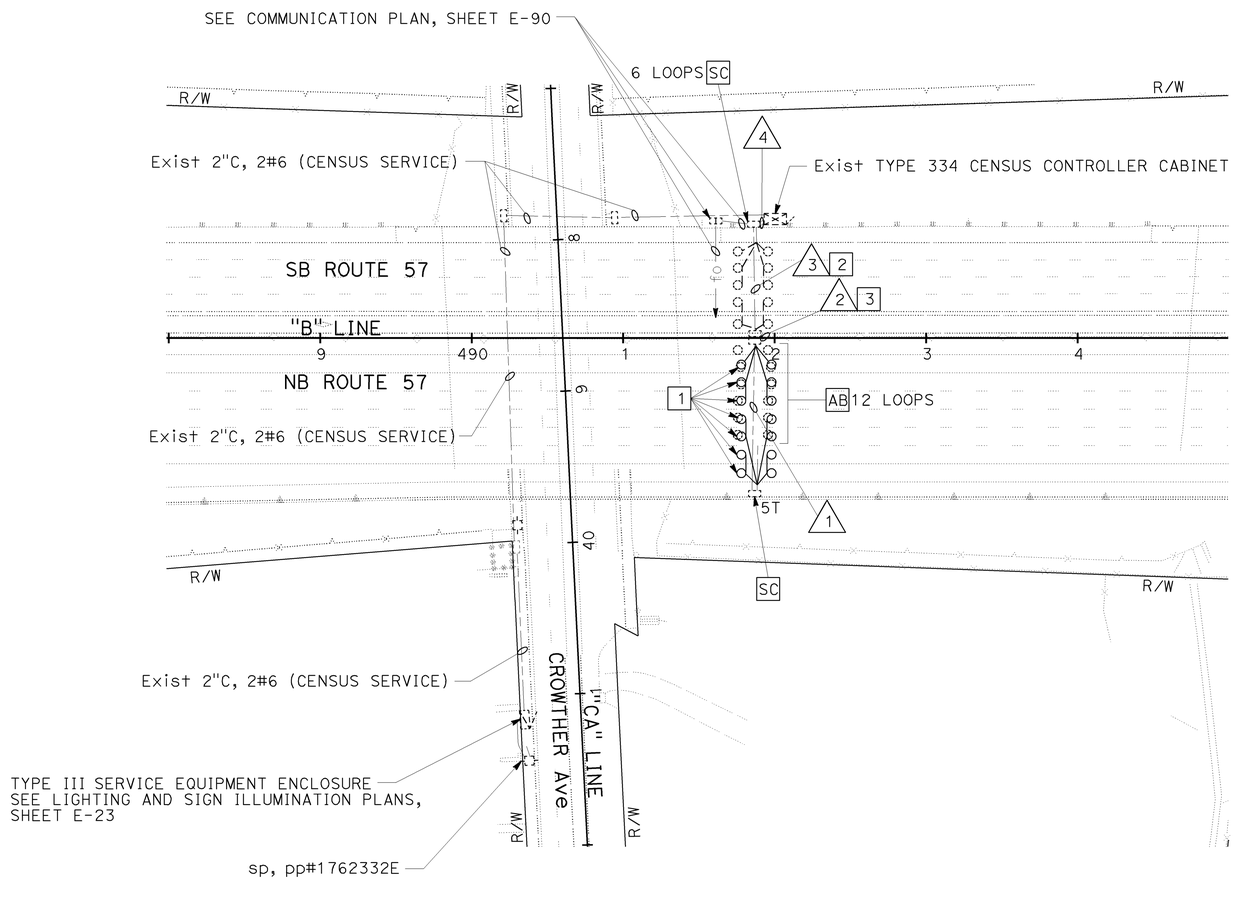

CENSUS STATION (LOCATION 1)

SCALE: 1" = 50'

E-68

THIS PLAN IS ACCURATE FOR ELECTRICAL WORK ONLY.

STATE OF CALIFORNIA - DEPARTMENT OF TRANSPORTATION
Caltrans
CONSULTANT FUNCTIONAL SUPERVISOR: MARK J. ESPOSITO
CALCULATED-DESIGNED BY: GARY TOLMIE
CHECKED BY: ARMANDO SOLIS
REVISED BY
DATE REVISED

H:\pdata\10105878\Admin\submittals\2009-06-29 FINAL Submittal\100% ELECTRONIC SUBMITTAL - MERGED FILES2009\Traffic\c0F031ua068.dgn

LAST REVISION 08-01-08
DATE PLOTTED => 21-DEC-2009
TIME PLOTTED => 11:16

Dist	COUNTY	ROUTE	POST MILES TOTAL PROJECT	SHEET No.	TOTAL SHEETS
12	Ora	57	16.2/18.6	637	960

Mark J. Esposito 7/15/09
REGISTERED CIVIL ENGINEER DATE

12-14-09
PLANS APPROVAL DATE

REGISTERED PROFESSIONAL ENGINEER
MARK J. ESPOSITO
No. 69921
Exp. 9-30-10
CIVIL
STATE OF CALIFORNIA

THE STATE OF CALIFORNIA OR ITS OFFICERS OR AGENTS SHALL NOT BE RESPONSIBLE FOR THE ACCURACY OR COMPLETENESS OF SCANNED COPIES OF THIS PLAN SHEET.

RBF CONSULTING
14275 ALTON PKWY
IRVINE, CA 92618

OCTA
550 S. MAIN STREET
ORANGE, CA 92863

FOR SHEETS E-69 TO E-118

ABBREVIATIONS

CCR	CAMERA CONTROL RECEIVER
E	EXISTING TO REMAIN
FDU	FIBER DISTRIBUTION UNIT
FOC	FIBER OPTIC CABLE
FODM	FIBER OPTIC DATA MODEM
GND	GROUND
GPRS	GENERAL PACKET RADIO SERVICE
NU	NOT USED
PDA	POWER DISTRIBUTION ASSEMBLY
PR OR P	PAIR
RMS	RAMP METERING SYSTEM
RX	RECEIVER
SMFO	SINGLEMODE FIBER OPTIC
TMC	TRAFFIC MANAGEMENT CENTER
TS	TRAFFIC SIGNAL
TX	TRANSMITTER
VT	VIDEO TRANSMITTER

TYPE A FOC	36 SINGLEMODE FIBER OPTIC CABLE
TYPE B FOC	72 SINGLEMODE FIBER OPTIC CABLE
TYPE C FOC	72 SINGLEMODE FIBER OPTIC CABLE
TYPE D FOC	12 SINGLEMODE FIBER OPTIC CABLE
TYPE B (TEMPORARY) FOC	72 SINGLEMODE FIBER OPTIC CABLE
TYPE C (TEMPORARY) FOC	72 SINGLEMODE FIBER OPTIC CABLE
TYPE D (TEMPORARY) FOC	12 SINGLEMODE FIBER OPTIC CABLE
TYPE E (TEMPORARY) FOC	144 SINGLEMODE FIGURE-8 FIBER OPTIC CABLE
TYPE F (TEMPORARY) FOC	144 SINGLEMODE FIBER OPTIC CABLE

GENERAL NOTES:

1. THE LOCATIONS OF EXISTING ELECTRICAL FACILITIES AND ELECTRICAL EQUIPMENT SUCH AS UNDERGROUND CONDUITS, PULL BOXES, SPLICE VAULTS, CONTROLLER CABINETS, SERVICE EQUIPMENT ENCLOSURES, AND POWER POLES ARE APPROXIMATE.
2. THE CONTRACTOR SHALL GIVE 72 HOURS (3 WORKING DAYS) ADVANCE WRITTEN NOTICE TO THE ENGINEER AND ALL CONCERNED AGENCIES, PRIOR TO REMOVING OR MODIFIYING ANY EXISTING ELECTRICAL FACILITIES.
3. EXISTING FREEWAY COMMUNICATION SYSTEM AND THE ASSOCIATED COMMUNICATION ELEMENT SYSTEMS SHALL REMAIN OPERATIONAL UNTIL CUT-OVER TO TEMPORARY COMMUNICATION SYSTEM AND AS PERMITTED BY THE ENGINEER.
4. INSTALL 4-1" INNERDUCTS WITH PULL ROPES IN 4" COMMUNICATION CONDUIT. PLUG ENDS OF UNUSED INNERDUCTS.
5. ALL FIBER OPTIC CONDUIT BENDS SHALL BE 4' RADIUS MINIMUM, AND SHALL BE FACTORY BENDS. ALL OTHER CONDUITS SHALL HAVE A MINIMUM BEND RADIUS OF NO LESS THAN 6 TIMES THE CONDUIT DIAMETER.
6. CONDUITS, SPLICE VAULTS, AND PULL BOXES SHALL BE INSTALLED WHERE SHOWN ON THE PLANS RELATIVE TO THE NEW SHOULDER.
7. THE CONTRACTOR SHALL ACCURATELY DETERMINE THE HORIZONTAL AND VERTICAL LOCATION OF ALL UNDERGROUND FACILITIES PRIOR TO EXCAVATION.

LEGEND:

	NEW SPLICE VAULT, SEE SHEET E-117 FOR DETAIL
	EXISTING SPLICE VAULT
	NEW COMMUNICATION PULL BOX, SEE SHEET E-116 FOR DETAIL
	EXISTING COMMUNICATION PULL BOX
	TEMPORARY STEEL POLE
OH	TEMPORARY OVERHEAD FIBER OPTIC LINE (TYPE E)
oh	EXISTING OVERHEAD FIBER OPTIC LINE (TYPE E)

TEMPORARY COMMUNICATION SYSTEM NOTES:

1. THE CONTRACTOR SHALL FIELD TEST SYSTEM TO ENSURE PROPER WORKING ORDER AFTER SWITCHOVER TO TEMPORARY SYSTEM.
2. CONDUITS, PULL BOXES, SPLICE VAULTS, AND CABLING SHOWN ON TEMPORARY COMMUNICATION SYSTEM PLANS ARE TEMPORARY UNLESS OTHERWISE SHOWN OR NOTED.
3. TEMPORARY CONDUIT DEPTH AS REQUIRED FOR FIELD CONDITIONS OR AS SPECIFIED IN PLANS.
4. COMMUNICATION PULL BOX SPACING SHALL BE AS SHOWN ON PLAN WITH A MAXIMUM SPACING OF 1000'.
5. COMMUNICATION ELEMENTS NOTED AS ULTIMATE SHALL REMAIN IN PLACE FOLLOWING CONSTRUCTION. INSTALL RELATIVE TO FINAL SURFACES AND GRADES.

TEMPORARY COMMUNICATION SYSTEM (NOTES AND LEGEND)

E-69

THIS PLAN IS ACCURATE FOR ELECTRICAL WORK ONLY.

REVISED BY	DATE REVISED
JESSICA PARRENO	08-01-08

CALCULATED-DESIGNED BY: ARMANDO SOLIS
CHECKED BY:
CONSULTANT FUNCTIONAL SUPERVISOR: CARLOS A. ORTIZ
STATE OF CALIFORNIA - DEPARTMENT OF TRANSPORTATION
Caltrans

LAST REVISION DATE PLOTTED => 21-DEC-2009
TIME PLOTTED => 11:16

H:\pdata\10105878\Admin\submittals\2009-06-29 FINAL Submittal\100% ELECTRONIC SUBMITTAL - MERGED\FDES2008\Traffic\c0F031ua069.dgn

BORDER LAST REVISED 4/11/2008
RELATIVE BORDER SCALE IS IN INCHES 0 1 2 3
USERNAME => trmnguye
DGN FILE => c0F031ua069.dgn
CU 12220
EA 0F0311

Dist	COUNTY	ROUTE	POST MILES TOTAL PROJECT	SHEET No.	TOTAL SHEETS
12	Ora	57	16.2/18.6	638	960

Mark J. Esposito 7/15/09
REGISTERED CIVIL ENGINEER DATE

12-14-09
PLANS APPROVAL DATE

REGISTERED PROFESSIONAL ENGINEER
MARK J. ESPOSITO
No. 69921
Exp. 9-30-10
CIVIL
STATE OF CALIFORNIA

THE STATE OF CALIFORNIA OR ITS OFFICERS OR AGENTS SHALL NOT BE RESPONSIBLE FOR THE ACCURACY OR COMPLETENESS OF SCANNED COPIES OF THIS PLAN SHEET.

RBF CONSULTING
14275 ALTON PKWY
IRVINE, CA 92618

OCTA
550 S. MAIN STREET
ORANGE, CA 92863

CONSTRUCTION NOTES:

1 DISCONNECT EXISTING TYPE B AND TYPE C FOC FROM EXISTING SPLICE CLOSURES INSIDE EXISTING SPLICE VAULT.

2 INSTALL ONE SPLICE CLOSURE AND TERMINATE EXISTING TYPE A FOC INSIDE EXISTING SPLICE VAULT.

3 SPLICE TYPE B (TEMPORARY) AND TYPE C (TEMPORARY) FOC TO EXISTING TYPE B AND C FOC, RESPECTIVELY. MAINTAIN EXISTING TYPE D FOC AND SPLICING. SEE SHEETS E-101 THROUGH E-104 FOR SPLICING DETAILS.

4 RC EXISTING TYPE A, B, AND C FOC.

5 INSTALL TEMPORARY CONDUIT WITH MINIMUM COVER OF 5' FROM ORIGINAL GRADE AND 2' FROM R/W.

6 RC EXISTING TYPE D FOC.

7 INSTALL TEMPORARY GPRS MODEM TO PROVIDE WIRELESS DATA TRANSMISSION BETWEEN FIELD UNIT AND TMC. SEE SHEET E-100 FOR DETAILS.

8 INSTALL TEMPORARY SPLICE CLOSURE. SEE SHEETS E-101 THROUGH E-103 FOR DETAILS.

9 INSTALL TEMPORARY WOOD POLE (45').

10 INSTALL 2' CONDUIT RISER ON TEMPORARY WOOD POLE.

11 INSTALL TYPE E (TEMPORARY) FOC BETWEEN TEMPORARY WOOD POLES. PROVIDE SLACK LOOP AT EACH POLE AND A MINIMUM 25' CLEARANCE OVER TRAVEL WAY.

12 REPLACE EXISTING TRAFFIC SIGNAL PULL BOX IN PLACE WITH NEW ULTIMATE #6 TRAFFIC SIGNAL PULL BOX DURING RECONSTRUCTION OF RAMP ON STAGE CONSTRUCTION STAGE 1B.

13 INSTALL TEMPORARY SPLICE CLOSURE. SEE SHEETS E-101 THROUGH E-104 FOR DETAILS.

14 EXISTING MODEL 334C CABINET FOR CCTV. TERMINATE TYPE D (TEMPORARY) FOC IN EXISTING FDU. SEE SHEETS E-101, E-103, E-104 AND E-106 FOR DETAILS.

15 EXISTING MODEL 334 CABINET FOR RMS OR CMS. TERMINATE TYPE D (TEMPORARY) FOC IN EXISTING FDU. SEE SHEETS E-102 THROUGH E-105 FOR DETAILS.

16 INSTALL TEMPORARY SPLICE CLOSURE. SEE SHEET E-104 FOR DETAILS.

17 INSTALL TYPE E (TEMPORARY) FOC BETWEEN TEMPORARY WOOD POLE AND TEMPORARY STEEL POLE. PROVIDE SLACK LOOP AT EACH POLE AND MAINTAIN MINIMUM 10' CLEARANCE OVER FIXED OBJECTS. SEE SHEET E-107 FOR DETAILS.

18 INSTALL TEMPORARY STEEL POLE PER DETAIL A ON SHEET E-107.

19 INSTALL TEMPORARY POLE MOUNTED TYPE G CABINET (WITHOUT POLICE PANEL) AND TEMPORARY SPLICE CLOSURE.

20 STRAP TEMPORARY 2" SCHEDULE 80 TYPE 3 CONDUIT TO TEMPORARY K-RAIL. SEE SHEET E-19 FOR DETAILS.

21 INSTALL ULTIMATE COMMUNICATIONS PULL BOX.

22 INSTALL TEMPORARY SPLICE CLOSURE AND SPLICE TWO (2) TYPE D (TEMPORARY) FOC TO TYPE F (TEMPORARY) FOC INSIDE TEMPORARY 6(E) PULL BOX. SEE SHEETS E-101 THROUGH E-104 FOR DETAILS.

23 NOT USED.

24 PULL BACK EXISTING TYPE F (TEMPORARY) FOC BETWEEN STATIONS 504+89 AND 511+45 AND REMOVE EXISTING CONDUIT FROM TEMPORARY K-RAIL.

25 RE-INSTALL CONDUIT (FROM STAGE 1) TO RELOCATED K-RAIL AND RE-INSTALL TYPE F (TEMPORARY) FOC (FROM STAGE 1) BETWEEN STATIONS 504+89 AND 511+45.

26 SPLICE TYPE F (TEMPORARY) FOC TO EXISTING TYPE E (TEMPORARY) FOC (STRAIGHT THROUGH) INSIDE EXISTING SPLICE CLOSURE (FROM STAGE 1).

27 RELOCATE EXISTING POLE, RISER, TYPE G CABINET, AND SPLICE CLOSURE (FROM STAGE 1) AND RE-TENSION OVERHEAD FOC.

28 SPLICE TYPE A, B, AND C FOC TO EXISTING TYPE A, B, AND C FOC, RESPECTIVELY IN EXISTING SPLICE CLOSURES. MAINTAIN EXISTING TYPE D FOC SPLICING. SEE SHEETS E-109 THROUGH E-113 FOR DETAILS.

29 INSTALL SPLICE CLOSURE. SEE SHEETS E-109 THROUGH E-113 FOR DETAILS.

30 EXISTING MODEL 334 CABINET FOR RMS AND TMS, OR MODEL 332 CABINET FOR TS, OR MODEL 334C FOR CMS. TERMINATE TYPE D FOC IN EXISTING FDU. SEE SHEETS E-110, E-112, E-113, AND E-114 FOR DETAILS.

31 EXISTING MODEL 334C CABINET FOR CCTV. TERMINATE TYPE D FOC IN EXISTING FDU. SEE SHEETS E-109, E-111, E-113, AND E-115 FOR DETAILS.

32 INSTALL TWO (2) SPLICE CLOSURES. SEE SHEETS E-109 THROUGH E-113 FOR DETAILS.

33 INSTALL TYPE 3 FIBER OPTIC CONDUIT IN STRUCTURAL PAVEMENT SECTION. SEE BRIDGE STRUCTURE PLAN FOR DETAILS.

34 INSTALL TYPE 3 FIBER OPTIC CONDUIT IN STRUCTURAL PAVEMENT SECTION. SEE WALL #476 OR WALL #496 FOR DETAILS.

35 INSTALL TYPE 1 FIBER OPTIC CONDUIT AND ATTACH TO STRUCTURAL SECTION. SEE BRIDGE STRUCTURE PLAN #55-0460 FOR DETAILS.

36 NOT USED.

37 INSTALL THREE (3) SPLICE CLOSURES AND TERMINATE TYPE A, B, AND C FOC. SPLICE THREE (3) TYPE D FOC TO ONE (1) TYPE C FOC. SEE SHEETS E-109 THROUGH E-113 FOR DETAILS.

38 INSTALL TEMPORARY SPLICE CLOSURE. SEE SHEETS E-102 THROUGH E-104 FOR DETAILS.

39 NOT USED.

40 SPLICE TYPE D (TEMPORARY) FOC TO EXISTING TYPE E (TEMPORARY) FOC FROM STAGE 1A.

41 INSTALL TEMPORARY TYPE 4 CONDUIT UNDER PULL BOX LID INTO COMMUNICATIONS PULL BOX.

42 RC EXISTING sic AND INSTALL TYPE D FOC.

43 INSTALL TEMPORARY SPLICE CLOSURE AND SPLICE TYPE F (TEMPORARY) FOC TO TEMPORARY 144 SMFO CABLE INSIDE 6(E) PULL BOX. SEE SHEETS E-101 THROUGH E-104 FOR DETAILS.

44 INSTALL FDU AND FODM IN EXISTING MODEL 332 CABINET FOR TS OR MODEL 334 CABINET FOR TMS. TERMINATE TYPE D FOC IN NEW FDU. SEE SHEETS E-110, E-112, E-113, AND E-114 FOR DETAILS.

TEMPORARY COMMUNICATION SYSTEM
(NOTES AND LEGEND)

E-70

THIS PLAN IS ACCURATE FOR ELECTRICAL WORK ONLY.

REVISED BY	DATE REVISED

CALCULATED-DESIGNED BY: JESSICA PARRENO
CHECKED BY: ARMANDO SOLIS
CONSULTANT FUNCTIONAL SUPERVISOR: CARLOS A. ORTIZ

STATE OF CALIFORNIA - DEPARTMENT OF TRANSPORTATION
Caltrans

H:\pdata\10105878\Admin\submittals\2009-06-29 FINAL Submittal\100% ELECTRONIC SUBMITTAL - MERGED\DEES2009\traffic\c0F031ua070.dgn

LAST REVISION DATE PLOTTED => 21-DEC-2009
TIME PLOTTED => 12:59

BORDER LAST REVISED 4/11/2008
RELATIVE BORDER SCALE IS IN INCHES 0 1 2 3
USERNAME => trpierce
DGN FILE => c0F031ua070.dgn
CU 12220
EA 0F0311

NOTES:

1. SEE SHEET E-69 AND E-70 FOR LEGEND, NOTES, AND ABBREVIATIONS.
2. FOR ACCURATE RIGHT OF WAY DATA, CONTACT RIGHT OF WAY ENGINEERING AT THE DISTRICT OFFICE.

CONDUCTOR AND CONDUIT SCHEDULE

CONDUCTOR TYPE	1	2	3	4
TYPE A FOC	1E	–	–	–
TYPE B FOC	1E	–	–	–
TYPE C FOC	1E	–	–	–
TYPE D FOC	–	–	1E	–
TYPE B (TEMPORARY) FOC	–	–	–	1N
TYPE C (TEMPORARY) FOC	–	–	–	1N
CONDUIT SIZE	4"E	4"E	4"E	4"E

E = EXISTING TO REMAIN
N = NEW

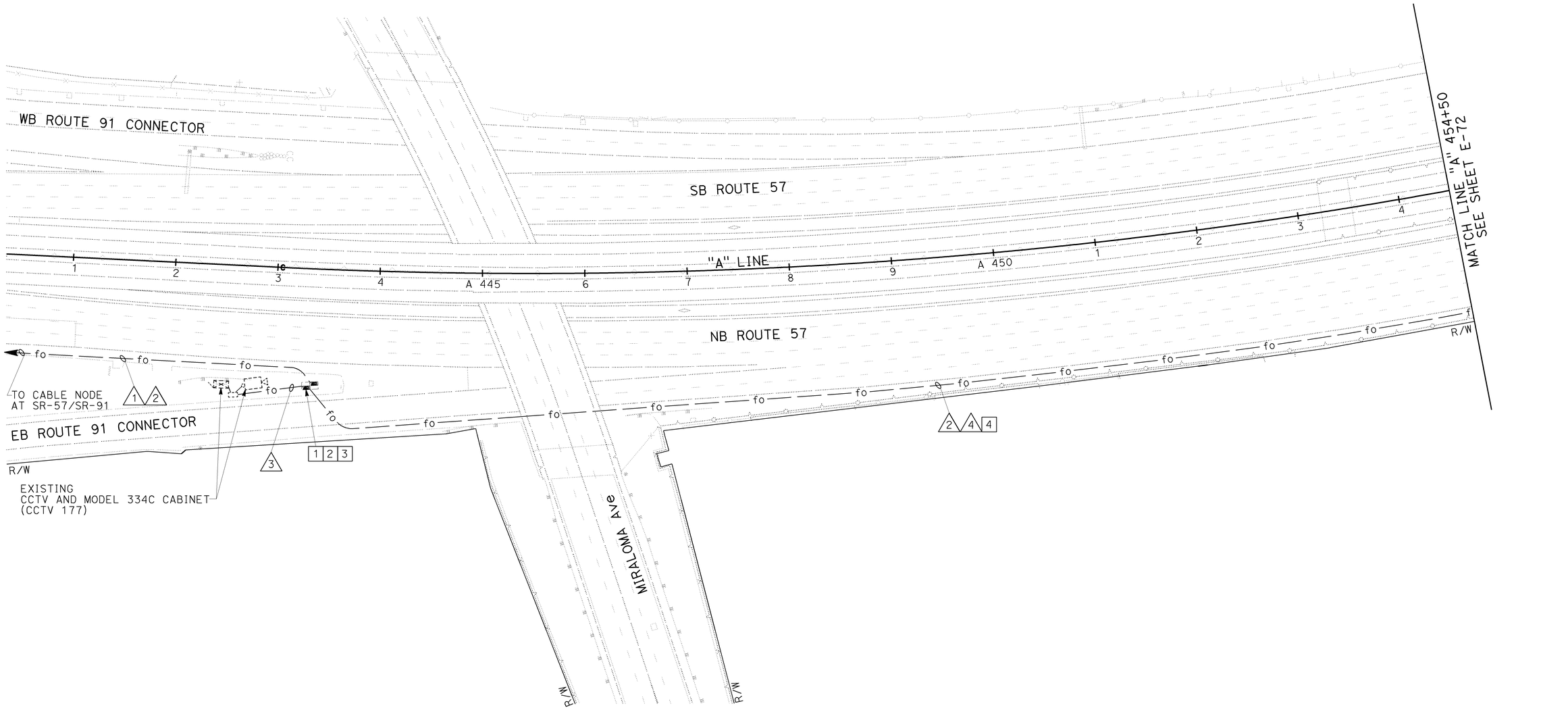

TEMPORARY COMMUNICATION SYSTEM
STAGE 1A

SCALE: 1" = 50'

E-71

THIS PLAN IS ACCURATE FOR ELECTRICAL WORK ONLY.

Dist	COUNTY	ROUTE	POST MILES TOTAL PROJECT	SHEET No.	TOTAL SHEETS
12	Ora	57	16.2/18.6	639	960

Mark J. Esposito 7/15/09
REGISTERED CIVIL ENGINEER DATE

MARK J. ESPOSITO No. 69921 Exp. 9-30-10 CIVIL — REGISTERED PROFESSIONAL ENGINEER — STATE OF CALIFORNIA

12-14-09
PLANS APPROVAL DATE

THE STATE OF CALIFORNIA OR ITS OFFICERS OR AGENTS SHALL NOT BE RESPONSIBLE FOR THE ACCURACY OR COMPLETENESS OF SCANNED COPIES OF THIS PLAN SHEET.

RBF CONSULTING
14275 ALTON PKWY
IRVINE, CA 92618

OCTA
550 S. MAIN STREET
ORANGE, CA 92863

STATE OF CALIFORNIA - DEPARTMENT OF TRANSPORTATION
CONSULTANT FUNCTIONAL SUPERVISOR: CARLOS A. ORTIZ
CALCULATED-DESIGNED BY: JESSICA PARRENO
CHECKED BY: ARMANDO SOLIS
REVISED BY
DATE REVISED

LAST REVISION DATE PLOTTED => 21-DEC-2009
TIME PLOTTED => 12:59
08-01-08

H:\pdata\10105878\Admin\submittals\2009-06-29 FINAL Submittal\100% ELECTRONIC SUBMITTAL - MERGED\DESIGN\Traffic\c0F031ua071.dgn

BORDER LAST REVISED 4/11/2008
RELATIVE BORDER SCALE IS IN INCHES 0 1 2 3
USERNAME => trpierce
DGN FILE => c0F031ua071.dgn
CU 12220
EA 0F0311

Dist	COUNTY	ROUTE	POST MILES TOTAL PROJECT	SHEET No.	TOTAL SHEETS
12	Ora	57	16.2/18.6	640	960

Mark J. Esposito 7/15/09
REGISTERED CIVIL ENGINEER DATE

12-14-09
PLANS APPROVAL DATE

REGISTERED PROFESSIONAL ENGINEER MARK J. ESPOSITO No. 69921 Exp. 9-30-10 CIVIL STATE OF CALIFORNIA

THE STATE OF CALIFORNIA OR ITS OFFICERS OR AGENTS SHALL NOT BE RESPONSIBLE FOR THE ACCURACY OR COMPLETENESS OF SCANNED COPIES OF THIS PLAN SHEET.

RBF CONSULTING
14275 ALTON PKWY
IRVINE, CA 92618

OCTA
550 S. MAIN STREET
ORANGE, CA 92863

NOTES:

1. SEE SHEET E-69 AND E-70 FOR LEGEND, NOTES, AND ABBREVIATIONS.
2. FOR ACCURATE RIGHT OF WAY DATA, CONTACT RIGHT OF WAY ENGINEERING AT THE DISTRICT OFFICE.

CONDUCTOR AND CONDUIT SCHEDULE

CONDUCTOR TYPE	2	4	5	6
TYPE B (TEMPORARY) FOC	-	1	-	1
TYPE C (TEMPORARY) FOC	-	1	-	1
CONDUIT SIZE	4"E	4"E	2"E	2"

ALL CONDUITS AND CONDUCTORS ARE NEW UNLESS OTHERWISE NOTED
E = EXISTING TO REMAIN

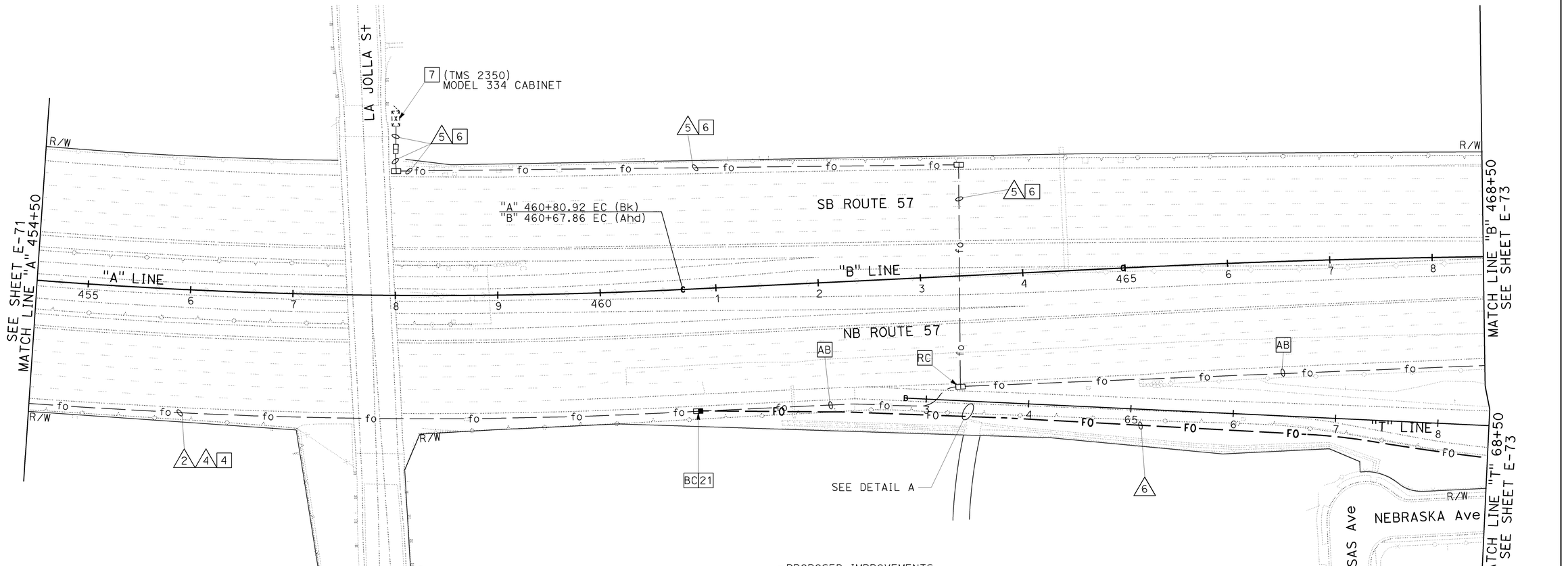

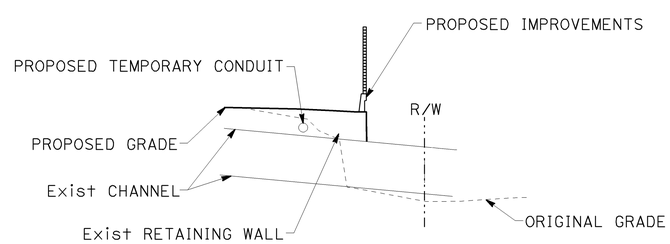

DETAIL A
NO SCALE

TEMPORARY COMMUNICATION SYSTEM
STAGE 1A

SCALE: 1" = 50'

E-72

THIS PLAN IS ACCURATE FOR ELECTRICAL WORK ONLY.

STATE OF CALIFORNIA - DEPARTMENT OF TRANSPORTATION
Caltrans
CONSULTANT FUNCTIONAL SUPERVISOR: CARLOS A. ORTIZ
CALCULATED-DESIGNED BY: JESSICA PARRENO
CHECKED BY: ARMANDO SOLIS
REVISED BY
DATE REVISED

H:\pdata\10105878\Admin\submittals\2009-06-29 FINAL Submittal\100% ELECTRONIC SUBMITTAL - MERGED FILES\2009\12-19\Traffic\c0F031ua072.dgn

LAST REVISION 08-01-08
DATE PLOTTED => 21-DEC-2009
TIME PLOTTED => 12:59

BORDER LAST REVISED 4/11/2008
RELATIVE BORDER SCALE IS IN INCHES 0 1 2 3
USERNAME => trpierce
DGN FILE => c0F031ua072.dgn
CU 12220
EA 0F0311

Dist	COUNTY	ROUTE	POST MILES TOTAL PROJECT	SHEET No.	TOTAL SHEETS
12	Ora	57	16.2/18.6	641	960

Mark J. Esposito 7/15/09
REGISTERED CIVIL ENGINEER DATE

12-14-09
PLANS APPROVAL DATE

REGISTERED PROFESSIONAL ENGINEER MARK J. ESPOSITO No. 69921 Exp. 9-30-10 CIVIL STATE OF CALIFORNIA

THE STATE OF CALIFORNIA OR ITS OFFICERS OR AGENTS SHALL NOT BE RESPONSIBLE FOR THE ACCURACY OR COMPLETENESS OF SCANNED COPIES OF THIS PLAN SHEET.

RBF CONSULTING
14275 ALTON PKWY
IRVINE, CA 92618

OCTA
550 S. MAIN STREET
ORANGE, CA 92863

NOTES:

1. SEE SHEET E-69 AND E-70 FOR LEGEND, NOTES, AND ABBREVIATIONS.
2. FOR ACCURATE RIGHT OF WAY DATA, CONTACT RIGHT OF WAY ENGINEERING AT THE DISTRICT OFFICE.

CONDUCTOR AND CONDUIT SCHEDULE

CONDUCTOR TYPE	5	6	7	8	9	10
TYPE B (TEMPORARY) FOC	-	1	-	-	-	-
TYPE C (TEMPORARY) FOC	-	1	-	-	-	-
TYPE D (TEMPORARY) FOC	-	-	-	1	-	1
TYPE E (TEMPORARY) FOC	-	-	1	-	-	-
TYPE F (TEMPORARY) FOC	-	-	-	-	1	-
CONDUIT SIZE	2"E	2"	2"	2"	2"	2-3"E

ALL CONDUITS AND CONDUCTORS ARE NEW UNLESS OTHERWISE NOTED.

E = EXISTING TO REMAIN

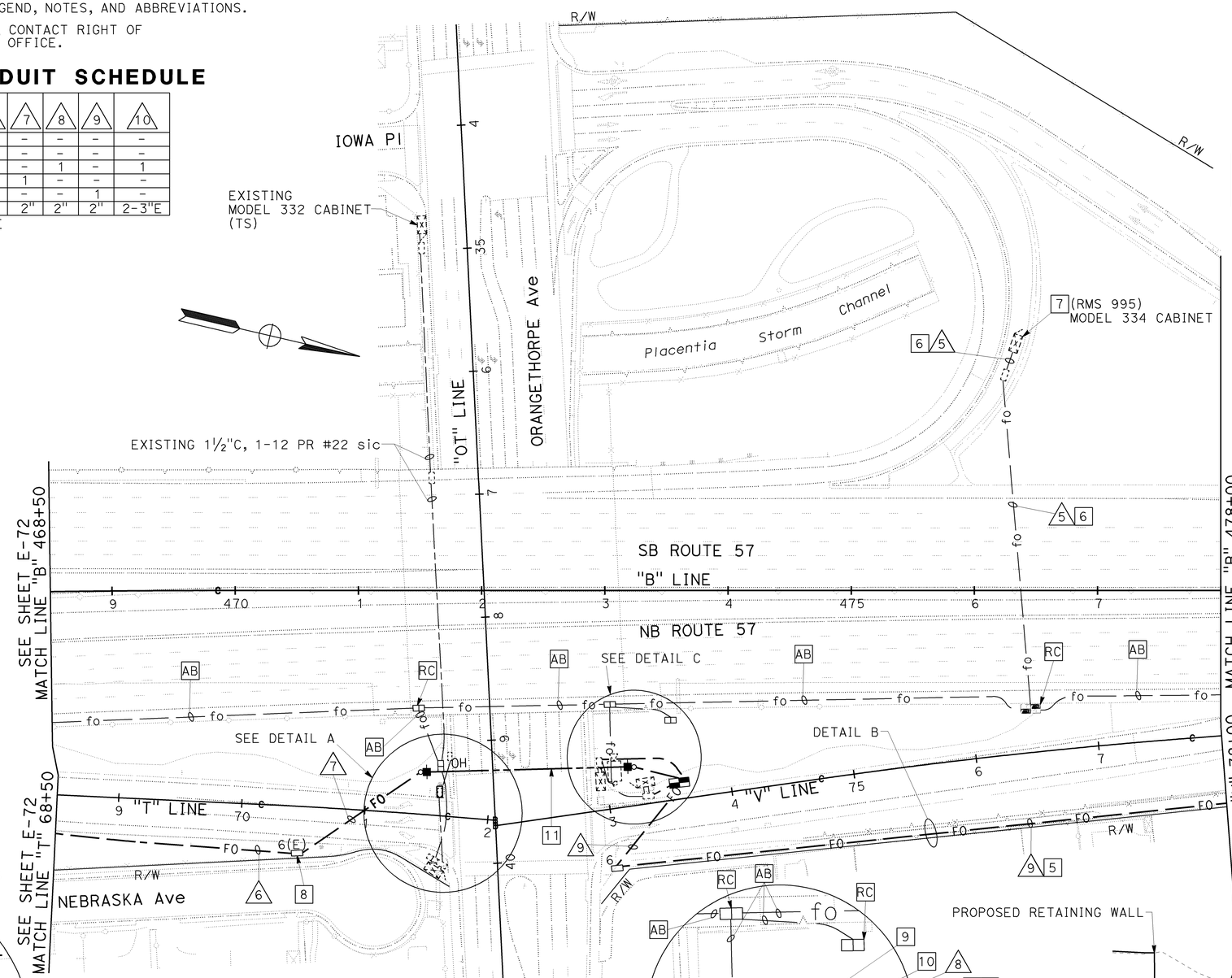

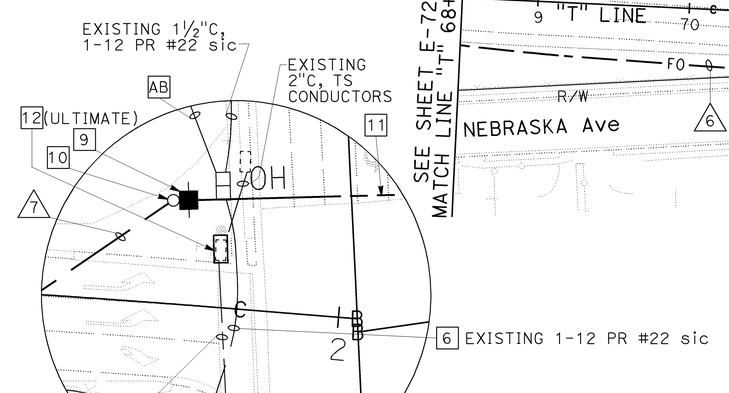

DETAIL A
NO SCALE

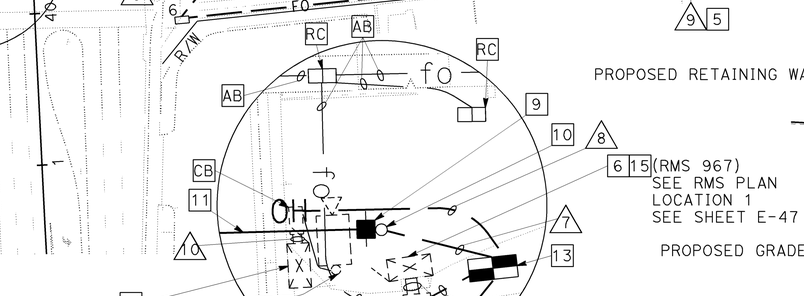

DETAIL C
NO SCALE

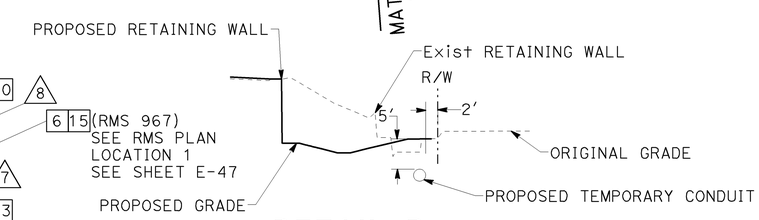

DETAIL B
NO SCALE

TEMPORARY COMMUNICATION SYSTEM
STAGE 1A

SCALE: 1" = 50'

THIS PLAN IS ACCURATE FOR ELECTRICAL WORK ONLY.

E-73

STATE OF CALIFORNIA - DEPARTMENT OF TRANSPORTATION
Caltrans
CONSULTANT FUNCTIONAL SUPERVISOR: CARLOS A. ORTIZ
CALCULATED-DESIGNED BY: JESSICA PARRENO
CHECKED BY: ARMANDO SOLIS
REVISED BY
DATE REVISED

H:\pdata\10105878\Admin\submittals\2009-06-29 FINAL Submittal\100% ELECTRONIC Submittals - MERGED\FDEES2009\Traffic\c0F031ua073.dgn

LAST REVISION 08-01-08
DATE PLOTTED => 21-DEC-2009
TIME PLOTTED => 12:59

Dist	COUNTY	ROUTE	POST MILES TOTAL PROJECT	SHEET No.	TOTAL SHEETS
12	Ora	57	16.2/18.6	642	960

Mark J. Esposito 7/15/09
REGISTERED CIVIL ENGINEER DATE

12-14-09
PLANS APPROVAL DATE

REGISTERED PROFESSIONAL ENGINEER
MARK J. ESPOSITO
No. 69921
Exp. 9-30-10
CIVIL
STATE OF CALIFORNIA

THE STATE OF CALIFORNIA OR ITS OFFICERS OR AGENTS SHALL NOT BE RESPONSIBLE FOR THE ACCURACY OR COMPLETENESS OF SCANNED COPIES OF THIS PLAN SHEET.

RBF CONSULTING
14275 ALTON PKWY
IRVINE, CA 92618

OCTA
550 S. MAIN STREET
ORANGE, CA 92863

NOTES:

1. SEE SHEET E-69 AND E-70 FOR LEGEND, NOTES, AND ABBREVIATIONS.
2. FOR ACCURATE RIGHT OF WAY DATA, CONTACT RIGHT OF WAY ENGINEERING AT THE DISTRICT OFFICE.

CONDUCTOR AND CONDUIT SCHEDULE

CONDUCTOR TYPE	7	9
TYPE E (TEMPORARY) FOC	1	-
TYPE F (TEMPORARY) FOC	-	1
CONDUIT SIZE	2"	2"

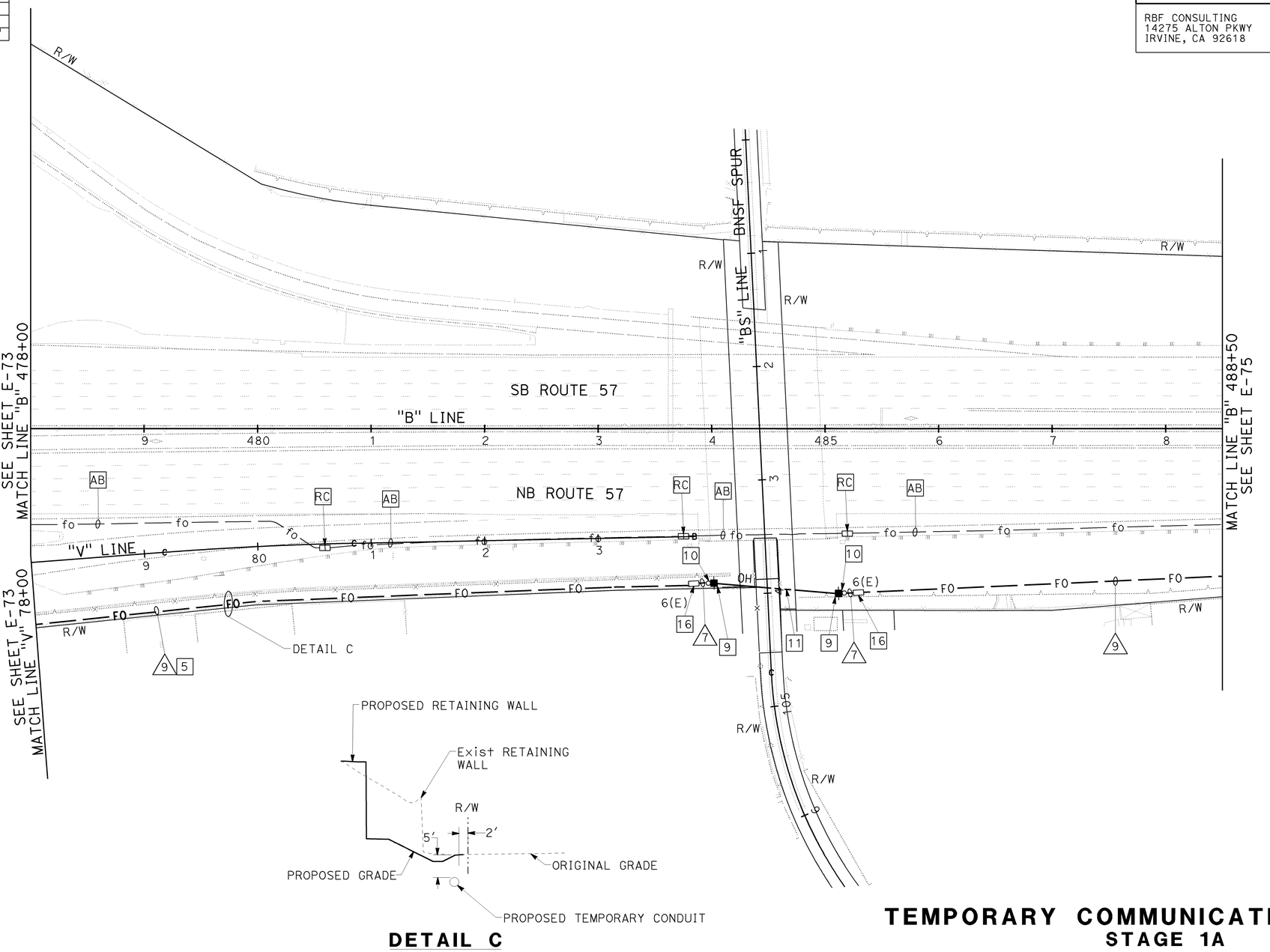

DETAIL C
NO SCALE

TEMPORARY COMMUNICATION SYSTEM
STAGE 1A

SCALE: 1" = 50'

E-74

THIS PLAN IS ACCURATE FOR ELECTRICAL WORK ONLY.

STATE OF CALIFORNIA - DEPARTMENT OF TRANSPORTATION
CONSULTANT FUNCTIONAL SUPERVISOR: CARLOS A. ORTIZ
CALCULATED-DESIGNED BY: JESSICA PARRENO
CHECKED BY: ARMANDO SOLIS
REVISED BY
DATE REVISED

H:\pdata\10105878\Admin\submittals\2009-06-29 FINAL Submittal\100% ELECTRONIC SUBMITTAL - MERGED\DEES2009\Traffic\c0F031ua074.dgn

LAST REVISION 08-01-08
DATE PLOTTED => 21-DEC-2009
TIME PLOTTED => 12:59

BORDER LAST REVISED 4/11/2008
RELATIVE BORDER SCALE IS IN INCHES 0 1 2 3
USERNAME => trpierce
DGN FILE => c0F031ua074.dgn
CU 12220
EA 0F0311

Dist	COUNTY	ROUTE	POST MILES TOTAL PROJECT	SHEET No.	TOTAL SHEETS
12	Ora	57	16.2/18.6	643	960

Mark J. Esposito 7/15/09
REGISTERED CIVIL ENGINEER DATE

12-14-09
PLANS APPROVAL DATE

REGISTERED PROFESSIONAL ENGINEER MARK J. ESPOSITO No. 69921 Exp. 9-30-10 CIVIL STATE OF CALIFORNIA

THE STATE OF CALIFORNIA OR ITS OFFICERS OR AGENTS SHALL NOT BE RESPONSIBLE FOR THE ACCURACY OR COMPLETENESS OF SCANNED COPIES OF THIS PLAN SHEET.

RBF CONSULTING
14275 ALTON PKWY
IRVINE, CA 92618

OCTA
550 S. MAIN STREET
ORANGE, CA 92863

NOTES:

1. SEE SHEET E-69 AND E-70 FOR LEGEND, NOTES, AND ABBREVIATIONS.
2. FOR ACCURATE RIGHT OF WAY DATA, CONTACT RIGHT OF WAY ENGINEERING AT THE DISTRICT OFFICE.

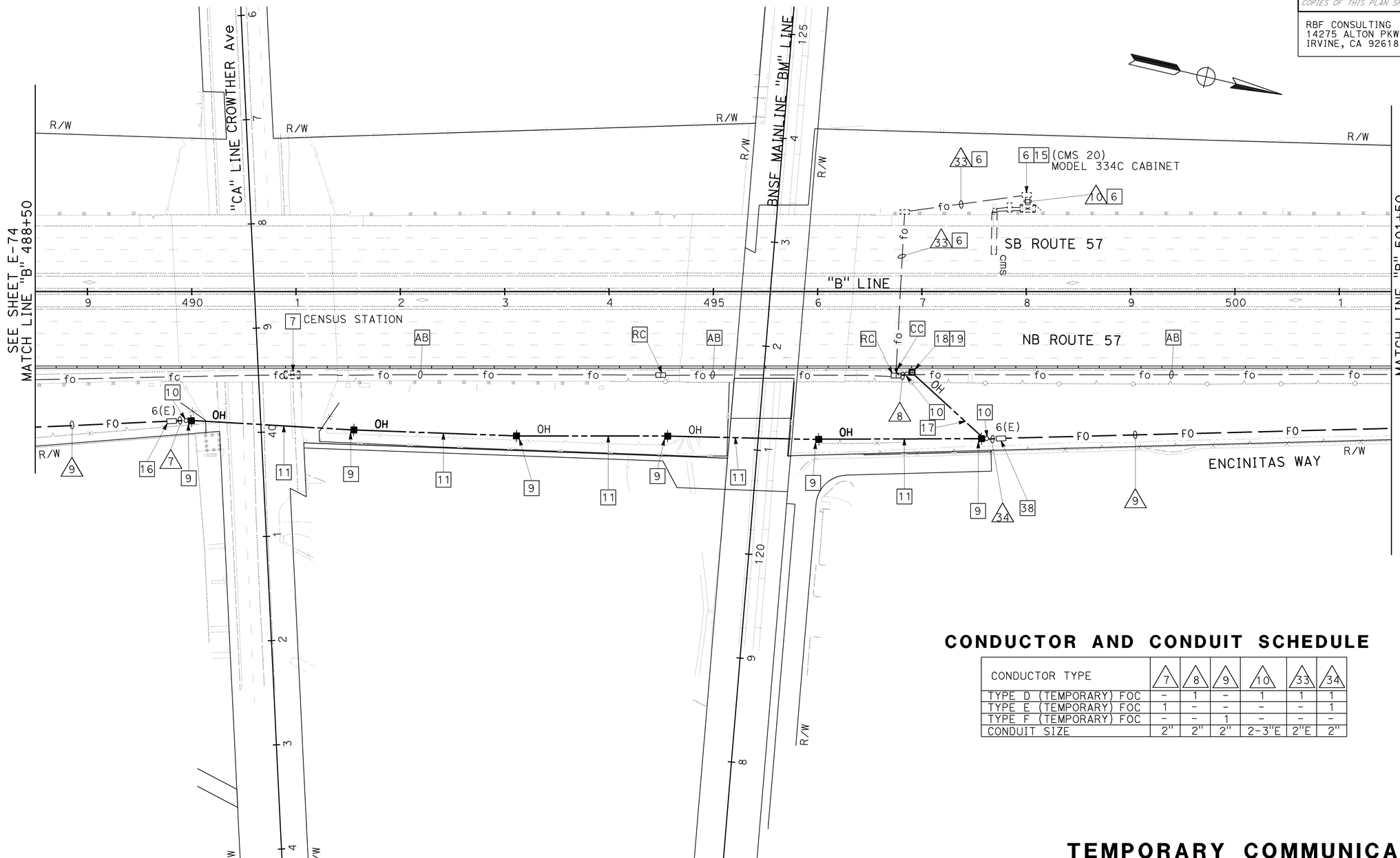

CONDUCTOR AND CONDUIT SCHEDULE

CONDUCTOR TYPE	7	8	9	10	33	34
TYPE D (TEMPORARY) FOC	-	1	-	1	1	1
TYPE E (TEMPORARY) FOC	1	-	-	-	-	1
TYPE F (TEMPORARY) FOC	-	-	1	-	-	-
CONDUIT SIZE	2"	2"	2"	2-3"E	2"E	2"

TEMPORARY COMMUNICATION SYSTEM
STAGE 1A

SCALE: 1" = 50'

E-75

THIS PLAN ACCURATE IS FOR ELECTRICAL WORK ONLY.

STATE OF CALIFORNIA - DEPARTMENT OF TRANSPORTATION
Caltrans

CONSULTANT FUNCTIONAL SUPERVISOR: CARLOS A. ORTIZ
CALCULATED-DESIGNED BY: JESSICA PARRENO
CHECKED BY: ARMANDO SOLIS
REVISED BY
DATE REVISED

H:\pdata\10105878\Admin\submittals\2009-06-29 FINAL Submittal\100% ELECTRONIC SUBMITTAL - MERGED FILES\2009\12-15\traffic\c0F031ua075.dgn

LAST REVISION 08-01-08
DATE PLOTTED => 21-DEC-2009
TIME PLOTTED => 12:59

BORDER LAST REVISED 4/11/2008
RELATIVE BORDER SCALE IS IN INCHES 0 1 2 3
USERNAME => trpierce
DGN FILE => c0F031ua075.dgn
CU 12220
EA 0F0311

NOTES:

1. SEE SHEET E-69 AND E-70 FOR LEGEND, NOTES, AND ABBREVIATIONS.
2. FOR ACCURATE RIGHT OF WAY AND ACCESS DATA, CONTACT RIGHT OF WAY ENGINEERING AT THE DISTRICT OFFICE.

Dist	COUNTY	ROUTE	POST MILES TOTAL PROJECT	SHEET No.	TOTAL SHEETS
12	Ora	57	16.2/18.6	644	960

Mark J. Esposito 7/15/09
REGISTERED CIVIL ENGINEER DATE

12-14-09
PLANS APPROVAL DATE

REGISTERED PROFESSIONAL ENGINEER
MARK J. ESPOSITO
No. 69921
Exp. 9-30-10
CIVIL
STATE OF CALIFORNIA

THE STATE OF CALIFORNIA OR ITS OFFICERS OR AGENTS SHALL NOT BE RESPONSIBLE FOR THE ACCURACY OR COMPLETENESS OF SCANNED COPIES OF THIS PLAN SHEET.

RBF CONSULTING
14275 ALTON PKWY
IRVINE, CA 92618

OCTA
550 S. MAIN STREET
ORANGE, CA 92863

CONDUCTOR AND CONDUIT SCHEDULE

CONDUCTOR TYPE	7	9
TYPE E (TEMPORARY) FOC	1	-
TYPE F (TEMPORARY) FOC	-	1
CONDUIT SIZE	2"	2"

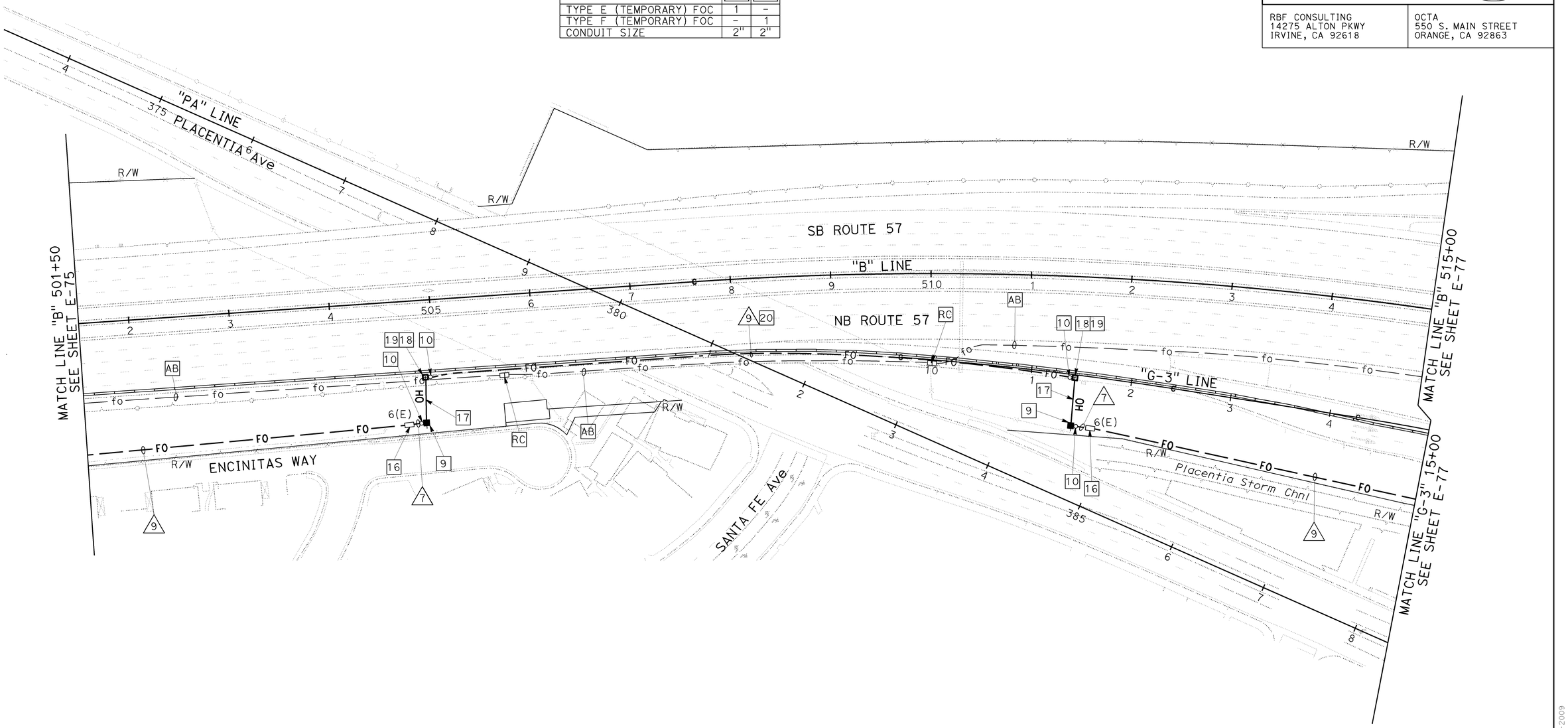

TEMPORARY COMMUNICATION SYSTEM
STAGE 1A

SCALE: 1" = 50'

E-76

THIS PLAN IS ACCURATE FOR ELECTRICAL WORK ONLY.

STATE OF CALIFORNIA - DEPARTMENT OF TRANSPORTATION
Caltrans
CONSULTANT FUNCTIONAL SUPERVISOR: CARLOS A. ORTIZ
CALCULATED-DESIGNED BY: JESSICA PARRENO
CHECKED BY: ARMANDO SOLIS
REVISED BY
DATE REVISED

H:\pdata\10105878\Admin\submittals\2009-06-29 FINAL Submittal\100% ELECTRONIC SUBMITTAL\Traffic\c0F031ua076.dgn
MERGED21 FDES2008 YA 7 39

LAST REVISION DATE PLOTTED => 21-DEC-2009
TIME PLOTTED => 12:59
08-01-08

BORDER LAST REVISED 4/11/2008
RELATIVE BORDER SCALE IS IN INCHES 0 1 2 3
USERNAME => trpierce
DGN FILE => c0F031ua076.dgn
CU 12220
EA 0F0311

NOTES:

1. SEE SHEET E-69 AND E-70 FOR LEGEND, NOTES, AND ABBREVIATIONS.
2. FOR ACCURATE RIGHT OF WAY AND ACCESS DATA, CONTACT RIGHT OF WAY ENGINEERING AT THE DISTRICT OFFICE.

CONDUCTOR AND CONDUIT SCHEDULE

CONDUCTOR TYPE	5	7	8	9	10	11▲
TYPE D (TEMPORARY) FOC	–	–	1	–	1	1
TYPE E (TEMPORARY) FOC	–	1	–	–	–	–
TYPE F (TEMPORARY) FOC	–	–	–	1	–	–
CONDUIT SIZE	2"E	2"	2"	2"	2-3"E	2"

ALL CONDUITS AND CONDUCTORS ARE NEW UNLESS OTHERWISE NOTED.
E= EXISTING TO REMAIN.
▲ INSTALL ULTIMATE CONDUIT.

Dist	COUNTY	ROUTE	POST MILES TOTAL PROJECT	SHEET No.	TOTAL SHEETS
12	Ora	57	16.2/18.6	645	960

Mark J. Esposito 7/15/09
REGISTERED CIVIL ENGINEER DATE

12-14-09
PLANS APPROVAL DATE

MARK J. ESPOSITO No. 69921 Exp.9-30-10 CIVIL — REGISTERED PROFESSIONAL ENGINEER — STATE OF CALIFORNIA

THE STATE OF CALIFORNIA OR ITS OFFICERS OR AGENTS SHALL NOT BE RESPONSIBLE FOR THE ACCURACY OR COMPLETENESS OF SCANNED COPIES OF THIS PLAN SHEET.

RBF CONSULTING
14275 ALTON PKWY
IRVINE, CA 92618

OCTA
550 S. MAIN STREET
ORANGE, CA 92863

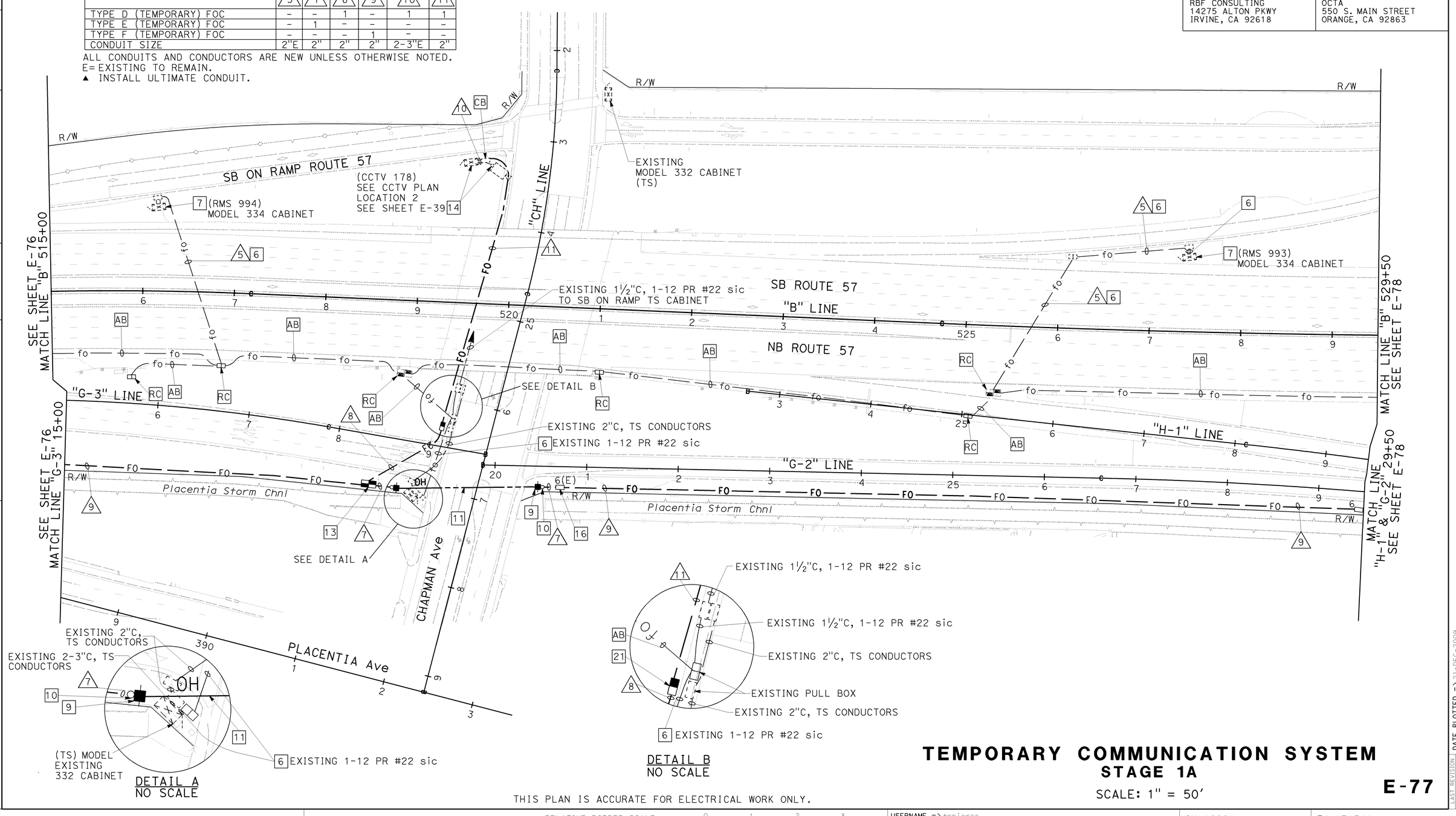

THIS PLAN IS ACCURATE FOR ELECTRICAL WORK ONLY.

TEMPORARY COMMUNICATION SYSTEM
STAGE 1A

SCALE: 1" = 50'

E-77

REVISED BY | DATE REVISED
JESSICA PARRENO | 08-01-08
CALCULATED-DESIGNED BY | ARMANDO SOLIS
CHECKED BY | CARLOS A. ORTIZ
CONSULTANT FUNCTIONAL SUPERVISOR
STATE OF CALIFORNIA - DEPARTMENT OF TRANSPORTATION
Caltrans

LAST REVISION DATE PLOTTED => 21-DEC-2009
TIME PLOTTED => 13:00

BORDER LAST REVISED 4/11/2008 | RELATIVE BORDER SCALE IS IN INCHES 0 1 2 3 | USERNAME => trpierce | DGN FILE => c0F031ua077.dgn | CU 12220 | EA 0F0311

NOTES:

1. SEE SHEETS E-69 AND E-70 FOR LEGEND, NOTES AND ABBREVIATIONS.
2. FOR ACCURATE RIGHT OF WAY DATA, CONTACT RIGHT OF WAY ENGINEERING AT THE DISTRICT OFFICE.

Dist	COUNTY	ROUTE	POST MILES TOTAL PROJECT	SHEET No.	TOTAL SHEETS
12	Ora	57	16.2/18.6	646	960

Mark J. Esposito 7/15/09
REGISTERED CIVIL ENGINEER DATE

12-14-09
PLANS APPROVAL DATE

REGISTERED PROFESSIONAL ENGINEER — MARK J. ESPOSITO No. 69921 Exp. 9-30-10 CIVIL — STATE OF CALIFORNIA

THE STATE OF CALIFORNIA OR ITS OFFICERS OR AGENTS SHALL NOT BE RESPONSIBLE FOR THE ACCURACY OR COMPLETENESS OF SCANNED COPIES OF THIS PLAN SHEET.

RBF CONSULTING
14275 ALTON PKWY
IRVINE, CA 92618

OCTA
550 S. MAIN STREET
ORANGE, CA 92863

CONDUCTOR AND CONDUIT SCHEDULE

CONDUCTOR TYPE	7	8	9	10	12
TYPE D (TEMPORARY) FOC	–	1	–	1	1
TYPE E (TEMPORARY) FOC	1	–	–	–	–
TYPE F (TEMPORARY) FOC	–	–	1	–	1
CONDUIT SIZE	2"	2"	2"	2-3"E	2"

ALL CONDUITS AND CONDUCTORS ARE NEW UNLESS OTHERWISE NOTED.
E = EXISTING

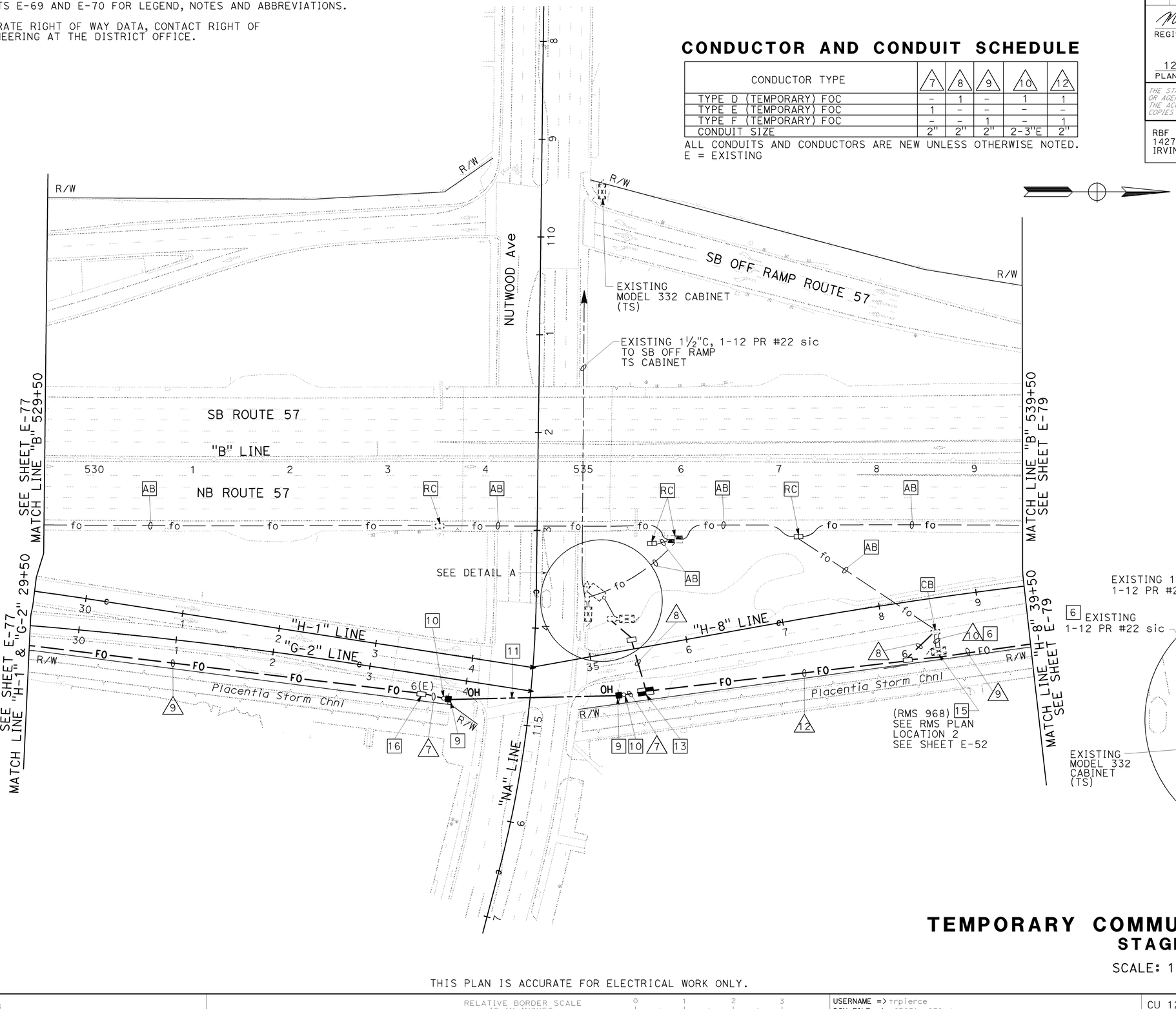

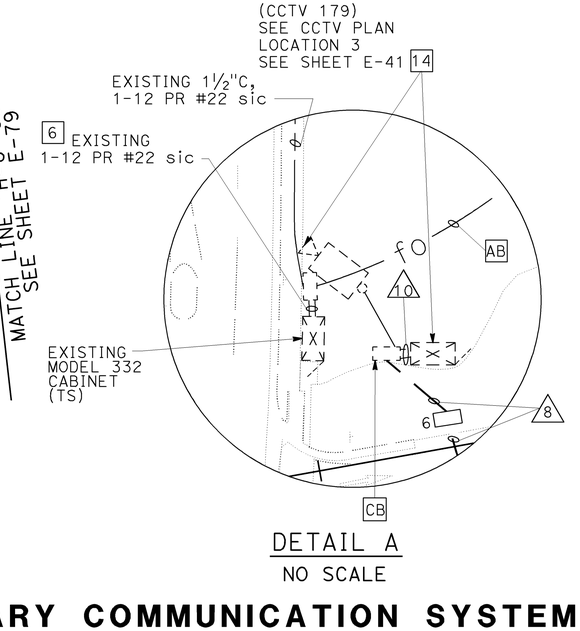

DETAIL A
NO SCALE

TEMPORARY COMMUNICATION SYSTEM
STAGE 1A

SCALE: 1" = 50'

E-78

THIS PLAN IS ACCURATE FOR ELECTRICAL WORK ONLY.

STATE OF CALIFORNIA - DEPARTMENT OF TRANSPORTATION
CONSULTANT FUNCTIONAL SUPERVISOR: CARLOS A. ORTIZ
CALCULATED-DESIGNED BY: JESSICA PARRENO
CHECKED BY: ARMANDO SOLIS
REVISED BY
DATE REVISED
trpierce 21-DEC-2009 13:00
V:\ProjectPlans\PSEWorking\d12\12-0f0311-Jim-electrical\c0F031ua078.dgn

BORDER LAST REVISED 4/11/2008
RELATIVE BORDER SCALE IS IN INCHES 0 1 2 3
USERNAME => trpierce
DGN FILE => c0F031ua078.dgn
CU 12220
EA 0F0311
LAST REVISION
DATE PLOTTED => 21-DEC-2009
TIME PLOTTED => 13:00
08-01-08

Dist	COUNTY	ROUTE	POST MILES TOTAL PROJECT	SHEET No.	TOTAL SHEETS
12	Ora	57	16.2/18.6	647	960

Mark J. Esposito 7/15/09
REGISTERED CIVIL ENGINEER DATE

12-14-09
PLANS APPROVAL DATE

REGISTERED PROFESSIONAL ENGINEER
MARK J. ESPOSITO
No. 69921
Exp. 9-30-10
CIVIL
STATE OF CALIFORNIA

THE STATE OF CALIFORNIA OR ITS OFFICERS OR AGENTS SHALL NOT BE RESPONSIBLE FOR THE ACCURACY OR COMPLETENESS OF SCANNED COPIES OF THIS PLAN SHEET.

RBF CONSULTING
14275 ALTON PKWY
IRVINE, CA 92618

OCTA
550 S. MAIN STREET
ORANGE, CA 92863

NOTES:

1. SEE SHEET E-69 AND E-70 FOR LEGEND, NOTES, AND ABBREVIATIONS.
2. FOR ACCURATE RIGHT OF WAY DATA, CONTACT RIGHT OF WAY ENGINEERING AT THE DISTRICT OFFICE.

CONDUCTOR AND CONDUIT SCHEDULE

CONDUCTOR TYPE	9
TYPE F (TEMPORARY) FOC	1
CONDUIT SIZE	2"

THIS PLAN IS ACCURATE FOR ELECTRICAL WORK ONLY.

TEMPORARY COMMUNICATION SYSTEM
STAGE 1A

SCALE: 1" = 50'

E-79

STATE OF CALIFORNIA - DEPARTMENT OF TRANSPORTATION
Caltrans

CONSULTANT FUNCTIONAL SUPERVISOR: CARLOS A. ORTIZ
CALCULATED-DESIGNED BY: JESSICA PARRENO
CHECKED BY: ARMANDO SOLIS
REVISED BY
DATE REVISED

H:\pdata\10105878\Admin\submittals\2009-06-29 FINAL Submittal\100% ELECTRONIC Submittal - MERGED FILES 2009\Traffic\c0F031ua079.dgn

NOTES:

1. SEE SHEET E-69 AND E-70 FOR LEGEND, NOTES, AND ABBREVIATIONS.
2. FOR ACCURATE RIGHT OF WAY DATA, CONTACT RIGHT OF WAY ENGINEERING AT THE DISTRICT OFFICE.

CONDUCTOR AND CONDUIT SCHEDULE

CONDUCTOR TYPE	(9)
TYPE F (TEMPORARY) FOC	1
CONDUIT SIZE	2"

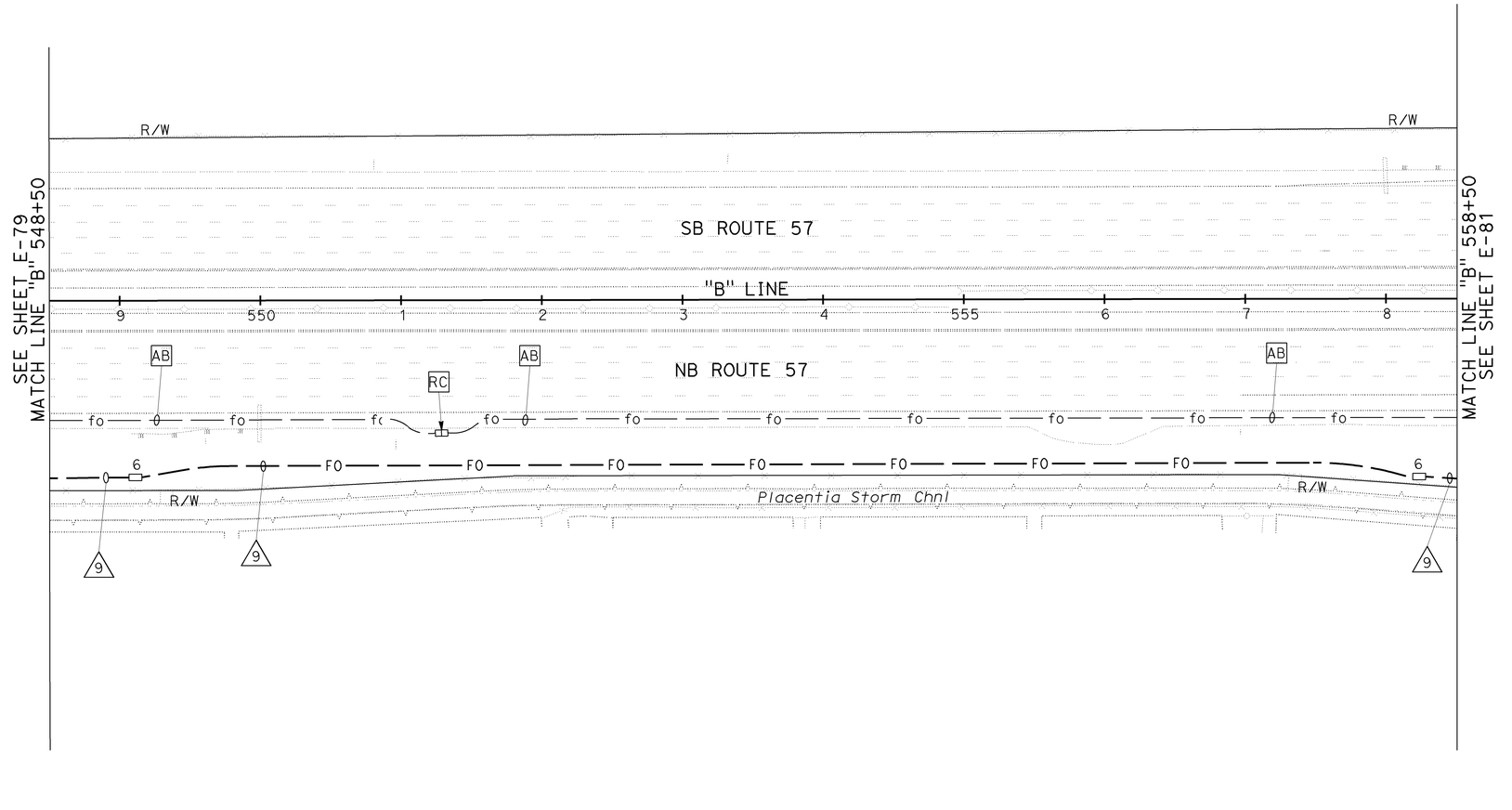

THIS PLAN IS ACCURATE FOR ELECTRICAL WORK ONLY.

TEMPORARY COMMUNICATION SYSTEM
STAGE 1A

SCALE: 1" = 50'

E-80

Dist	COUNTY	ROUTE	POST MILES TOTAL PROJECT	SHEET No.	TOTAL SHEETS
12	Ora	57	16.2/18.6	648	960

Mark J. Esposito 7/15/09
REGISTERED CIVIL ENGINEER DATE

MARK J. ESPOSITO No. 69921 Exp. 9-30-10 CIVIL — REGISTERED PROFESSIONAL ENGINEER — STATE OF CALIFORNIA

12-14-09
PLANS APPROVAL DATE

THE STATE OF CALIFORNIA OR ITS OFFICERS OR AGENTS SHALL NOT BE RESPONSIBLE FOR THE ACCURACY OR COMPLETENESS OF SCANNED COPIES OF THIS PLAN SHEET.

RBF CONSULTING
14275 ALTON PKWY
IRVINE, CA 92618

OCTA
550 S. MAIN STREET
ORANGE, CA 92863

REVISED BY | DATE REVISED
JESSICA PARRENO | ARMANDO SOLIS
CALCULATED-DESIGNED BY | CHECKED BY
CONSULTANT FUNCTIONAL SUPERVISOR: CARLOS A. ORTIZ

STATE OF CALIFORNIA - DEPARTMENT OF TRANSPORTATION
Caltrans

H:\pdata\10105878\Admin\submittals\2009-06-29 FINAL Submittal\100% ELECTRONIC SUBMITTAL - MERGED\DGN\Traffic\c0F031ua080.dgn

LAST REVISION | DATE PLOTTED => 21-DEC-2009
08-01-08 | TIME PLOTTED => 12:51

BORDER LAST REVISED 4/11/2008 | RELATIVE BORDER SCALE IS IN INCHES 0 1 2 3 | USERNAME => s135318 | DGN FILE => c0F031ua080.dgn | CU 12220 | EA 0F0311

NOTES:

1. SEE SHEET E-69 AND E-70 FOR LEGEND, NOTES, AND ABBREVIATIONS.
2. FOR ACCURATE RIGHT OF WAY DATA, CONTACT RIGHT OF WAY ENGINEERING AT THE DISTRICT OFFICE.

CONDUCTOR AND CONDUIT SCHEDULE

CONDUCTOR TYPE	5	8	9	10	13
TYPE D (TEMPORARY) FOC	–	1	–	1	2
TYPE F (TEMPORARY) FOC	–	–	1	–	–
CONDUIT SIZE	2"E	2"	2"	2-3"E	2"

ALL CONDUITS AND CONDUCTORS ARE NEW UNLESS OTHERWISE NOTED.
E = EXISTING TO REMAIN

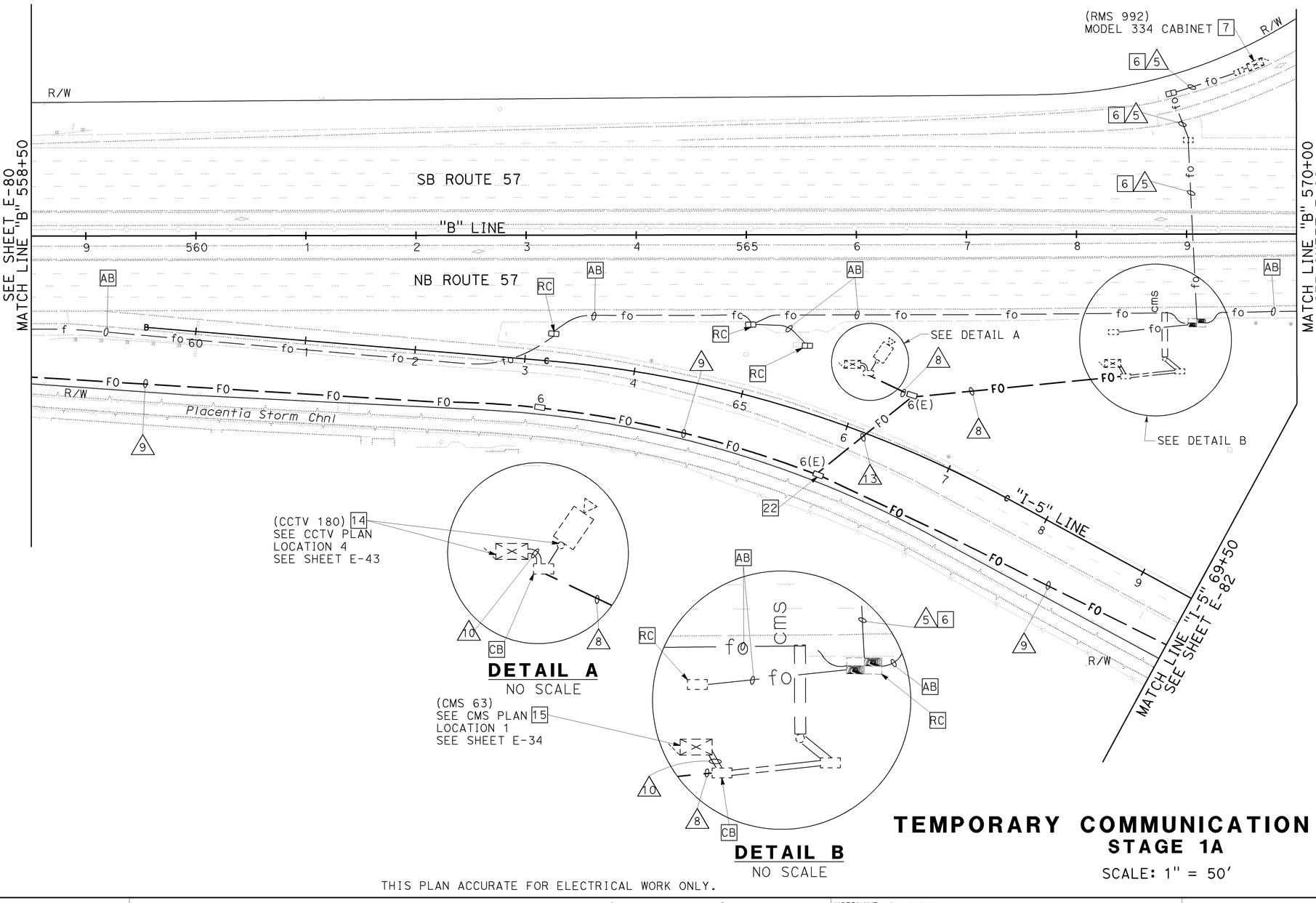

DETAIL A
NO SCALE

DETAIL B
NO SCALE

TEMPORARY COMMUNICATION SYSTEM
STAGE 1A

SCALE: 1" = 50'

E-81

THIS PLAN ACCURATE FOR ELECTRICAL WORK ONLY.

Dist	COUNTY	ROUTE	POST MILES TOTAL PROJECT	SHEET No.	TOTAL SHEETS
12	Ora	57	16.2/18.6	649	960

Mark J. Esposito 7/15/09
REGISTERED CIVIL ENGINEER DATE

MARK J. ESPOSITO No. 69921 Exp. 9-30-10 CIVIL — REGISTERED PROFESSIONAL ENGINEER — STATE OF CALIFORNIA

12-14-09
PLANS APPROVAL DATE

THE STATE OF CALIFORNIA OR ITS OFFICERS OR AGENTS SHALL NOT BE RESPONSIBLE FOR THE ACCURACY OR COMPLETENESS OF SCANNED COPIES OF THIS PLAN SHEET.

RBF CONSULTING
14275 ALTON PKWY
IRVINE, CA 92618

OCTA
550 S. MAIN STREET
ORANGE, CA 92863

STATE OF CALIFORNIA - DEPARTMENT OF TRANSPORTATION
Caltrans
CONSULTANT FUNCTIONAL SUPERVISOR: CARLOS A. ORTIZ
CALCULATED-DESIGNED BY: JESSICA PARRENO
CHECKED BY: ARMANDO SOLIS
REVISED BY
DATE REVISED

H:\pdata\10105878\Admin\submittals\2009-06-29 FINAL Submittal\100% ELECTRONIC SUBMITTAL - MERGED\DEES2009\Traffic\c0F031ua081.dgn

LAST REVISION DATE PLOTTED => 21-DEC-2009
08-01-08 TIME PLOTTED => 12:51

BORDER LAST REVISED 4/11/2008
RELATIVE BORDER SCALE IS IN INCHES 0 1 2 3
USERNAME => s135318
DGN FILE => c0F031ua081.dgn
CU 12220
EA 0F0311

Dist	COUNTY	ROUTE	POST MILES TOTAL PROJECT	SHEET No.	TOTAL SHEETS
12	Ora	57	16.2/18.6	650	960

Mark J. Esposito 7/15/09
REGISTERED CIVIL ENGINEER DATE

12-14-09
PLANS APPROVAL DATE

REGISTERED PROFESSIONAL ENGINEER MARK J. ESPOSITO No. 69921 Exp. 9-30-10 CIVIL STATE OF CALIFORNIA

THE STATE OF CALIFORNIA OR ITS OFFICERS OR AGENTS SHALL NOT BE RESPONSIBLE FOR THE ACCURACY OR COMPLETENESS OF SCANNED COPIES OF THIS PLAN SHEET.

RBF CONSULTING
14275 ALTON PKWY
IRVINE, CA 92618

OCTA
550 S. MAIN STREET
ORANGE, CA 92863

NOTES:

1. SEE SHEET E-69 AND E-70 FOR LEGEND, NOTES, AND ABBREVIATIONS.
2. FOR ACCURATE RIGHT OF WAY DATA, CONTACT RIGHT OF WAY ENGINEERING AT THE DISTRICT OFFICE.

CONDUCTOR AND CONDUIT SCHEDULE

CONDUCTOR TYPE	5	8	9	10	13	32	33
TYPE D (TEMPORARY) FOC	-	1	-	1	2	2	1
TYPE F (TEMPORARY) FOC	-	-	1	-	-	-	-
PULL ROPE	-	-	-	-	-	-	-
12 PR #22 SIC	-	-	-	-	-	1E	-
CONDUIT SIZE	2"E	2"	2"	2-3"E	2"	2"E	2"E

ALL CONDUITS AND CONDUCTORS ARE NEW UNLESS OTHERWISE NOTED

E = EXISTING TO REMAIN

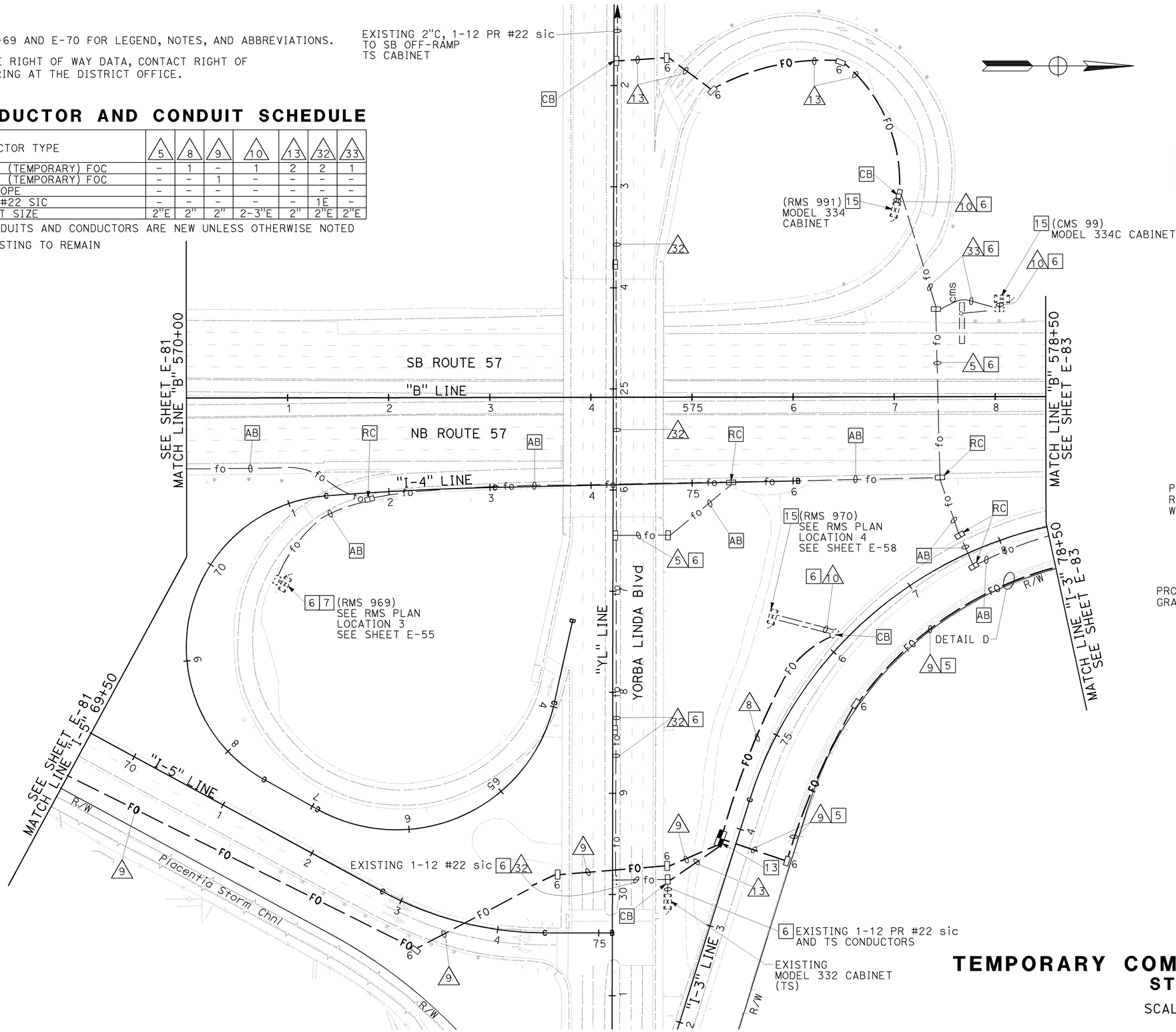

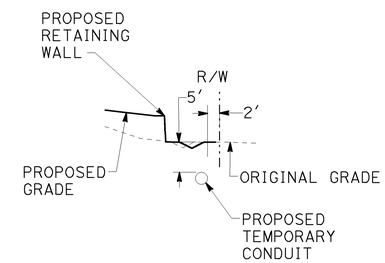

DETAIL D
NO SCALE

TEMPORARY COMMUNICATION SYSTEM
STAGE 1A

SCALE: 1" = 50'

E-82

THIS PLAN IS ACCURATE FOR ELECTRICAL WORK ONLY.

STATE OF CALIFORNIA - DEPARTMENT OF TRANSPORTATION
Caltrans
CONSULTANT FUNCTIONAL SUPERVISOR: CARLOS A. ORTIZ
CALCULATED-DESIGNED BY: JESSICA PARRENO
CHECKED BY: ARMANDO SOLIS
REVISED BY
DATE REVISED

H:\pdata\10105878\Admin\submittals\2009-06-29 FINAL Submittal\100% ELECTRONIC SUBMITTAL - MERGED FILES\2009\12-14\traffic\c0F031ua082.dgn

LAST REVISION 08-01-08
DATE PLOTTED => 21-DEC-2009
TIME PLOTTED => 12:51

Dist	COUNTY	ROUTE	POST MILES TOTAL PROJECT	SHEET No.	TOTAL SHEETS
12	Ora	57	16.2/18.6	651	960

Mark J. Esposito 7/15/09
REGISTERED CIVIL ENGINEER DATE

12-14-09
PLANS APPROVAL DATE

REGISTERED PROFESSIONAL ENGINEER MARK J. ESPOSITO No. 69921 Exp. 9-30-10 CIVIL STATE OF CALIFORNIA

THE STATE OF CALIFORNIA OR ITS OFFICERS OR AGENTS SHALL NOT BE RESPONSIBLE FOR THE ACCURACY OR COMPLETENESS OF SCANNED COPIES OF THIS PLAN SHEET.

RBF CONSULTING
14275 ALTON PKWY
IRVINE, CA 92618

OCTA
550 S. MAIN STREET
ORANGE, CA 92863

NOTES:

1. SEE SHEET E-69 AND E-70 FOR LEGEND, NOTES, AND ABBREVIATIONS.
2. FOR ACCURATE RIGHT OF WAY DATA, CONTACT RIGHT OF WAY ENGINEERING AT THE DISTRICT OFFICE.

CONDUCTOR AND CONDUIT SCHEDULE

CONDUCTOR TYPE	9
TYPE F (TEMPORARY) FOC	1
CONDUIT SIZE	2"

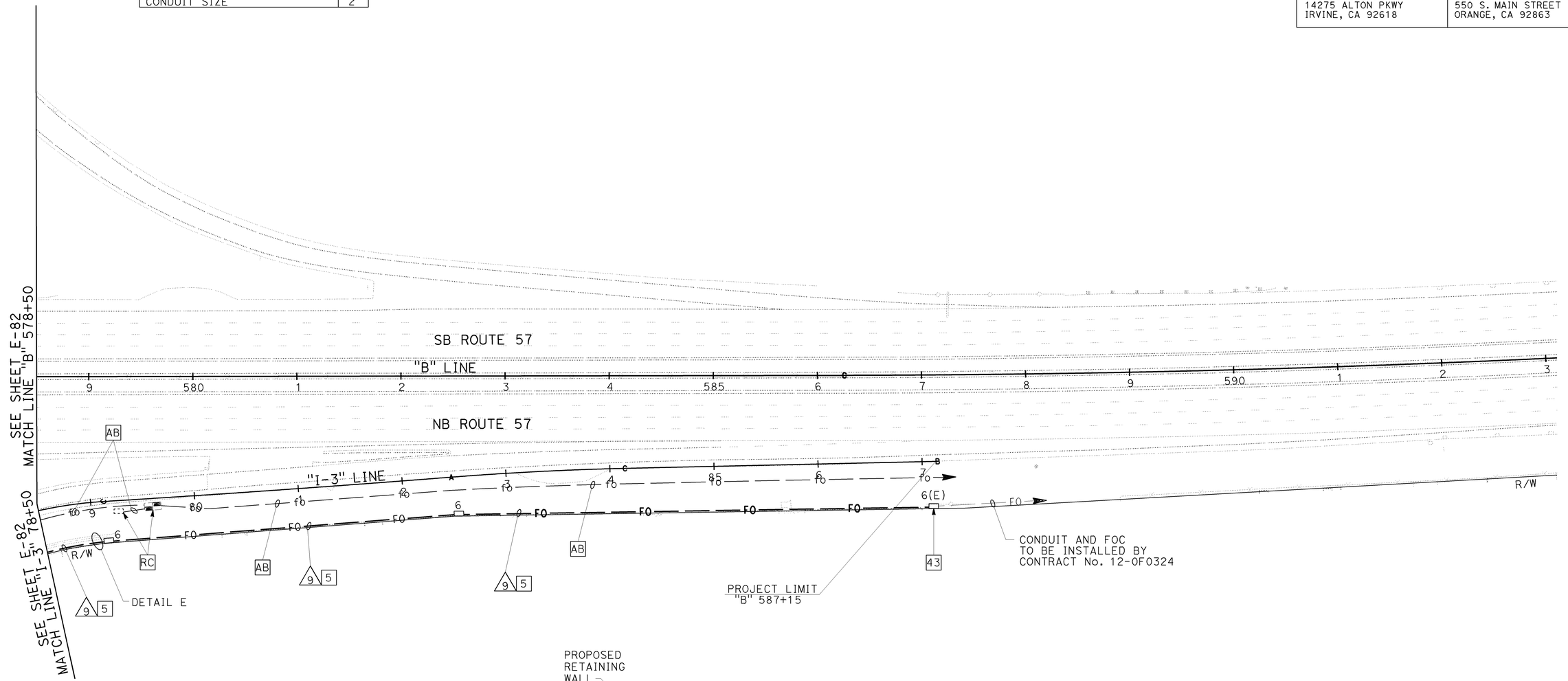

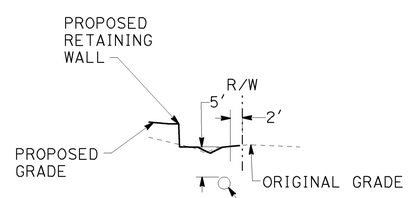

DETAIL E
NO SCALE

TEMPORARY COMMUNICATION SYSTEM
STAGE 1A

SCALE: 1" = 50'

E-83

THIS PLAN IS ACCURATE FOR ELECTRICAL WORK ONLY.

STATE OF CALIFORNIA - DEPARTMENT OF TRANSPORTATION
Caltrans
CONSULTANT FUNCTIONAL SUPERVISOR: CARLOS A. ORTIZ
CALCULATED-DESIGNED BY: JESSICA PARRENO
CHECKED BY: ARMANDO SOLIS
REVISED BY
DATE REVISED

H:\pdata\10105878\Admin\submittals\2009-06-29 FINAL Submittal\100% ELECTRONIC SUBMITTAL - MERGED\FDEES2009\Traffic\c0F031ua083.dgn

LAST REVISION 08-01-08
DATE PLOTTED => 21-DEC-2009
TIME PLOTTED => 12:51

Dist	COUNTY	ROUTE	POST MILES TOTAL PROJECT	SHEET No.	TOTAL SHEETS
12	Ora	57	16.2/18.6	652	960

Mark J. Esposito 7/15/09
REGISTERED CIVIL ENGINEER DATE

12-14-09
PLANS APPROVAL DATE

REGISTERED PROFESSIONAL ENGINEER MARK J. ESPOSITO No. 69921 Exp. 9-30-10 CIVIL STATE OF CALIFORNIA

THE STATE OF CALIFORNIA OR ITS OFFICERS OR AGENTS SHALL NOT BE RESPONSIBLE FOR THE ACCURACY OR COMPLETENESS OF SCANNED COPIES OF THIS PLAN SHEET.

RBF CONSULTING
14275 ALTON PKWY
IRVINE, CA 92618

OCTA
550 S. MAIN STREET
ORANGE, CA 92863

NOTES:

1. SEE SHEET E-69 AND E-70 FOR LEGEND, NOTES, AND ABBREVIATIONS.
2. FOR ACCURATE RIGHT OF WAY DATA, CONTACT RIGHT OF WAY ENGINEERING AT THE DISTRICT OFFICE.

CONDUCTOR AND CONDUIT SCHEDULE

CONDUCTOR TYPE	15	16
TYPE E (TEMPORARY) FOC	-	1E
TYPE F (TEMPORARY) FOC	1E	-
CONDUIT SIZE	2"E	2"E

E = EXISTING TO REMAIN

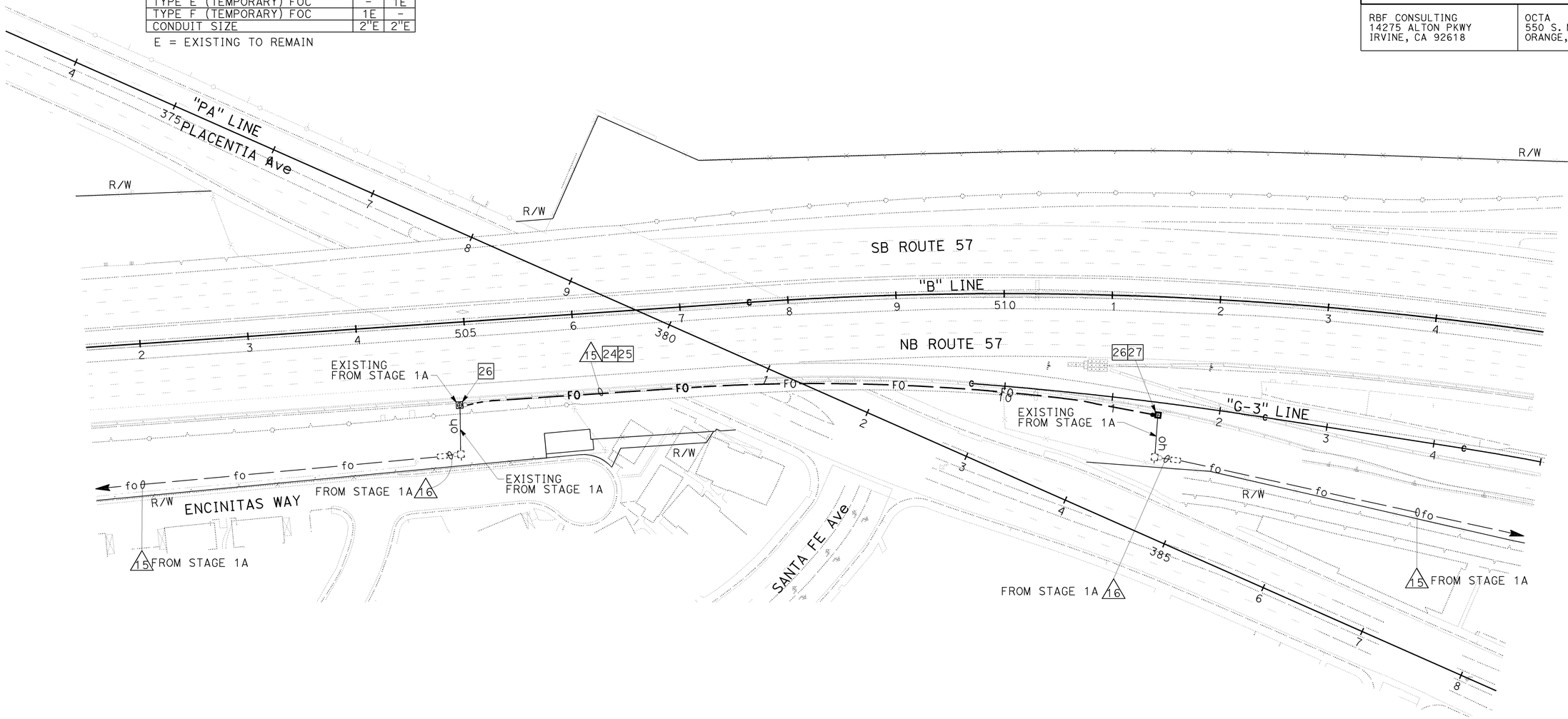

TEMPORARY COMMUNICATION SYSTEM
STAGE 1B

SCALE: 1" = 50'

E-84

THIS PLAN IS ACCURATE FOR ELECTRICAL WORK ONLY.

STATE OF CALIFORNIA - DEPARTMENT OF TRANSPORTATION
Caltrans
CONSULTANT FUNCTIONAL SUPERVISOR: CARLOS A. ORTIZ
CALCULATED-DESIGNED BY: JESSICA PARRENO
CHECKED BY: ARMANDO SOLIS
REVISED BY
DATE REVISED

H:\pdata\10105878\Admin\submittals\2009-06-29 FINAL Submittal\100% ELECTRONIC SUBMITTAL - MERGED FILES\2009\12-15\ffic\c0F031ua084.dgn

LAST REVISION 08-01-08
DATE PLOTTED => 21-DEC-2009
TIME PLOTTED => 12:51

BORDER LAST REVISED 4/11/2008
RELATIVE BORDER SCALE IS IN INCHES 0 1 2 3
USERNAME => s135318
DGN FILE => c0F031ua084.dgn
CU 12220
EA 0F0311

Dist	COUNTY	ROUTE	POST MILES TOTAL PROJECT	SHEET No.	TOTAL SHEETS
12	Ora	57	16.2/18.6	653	960

Mark J. Esposito 7/15/09
REGISTERED CIVIL ENGINEER DATE

12-14-09
PLANS APPROVAL DATE

REGISTERED PROFESSIONAL ENGINEER MARK J. ESPOSITO No. 69921 Exp. 9-30-10 CIVIL STATE OF CALIFORNIA

THE STATE OF CALIFORNIA OR ITS OFFICERS OR AGENTS SHALL NOT BE RESPONSIBLE FOR THE ACCURACY OR COMPLETENESS OF SCANNED COPIES OF THIS PLAN SHEET.

RBF CONSULTING
14275 ALTON PKWY
IRVINE, CA 92618

OCTA
550 S. MAIN STREET
ORANGE, CA 92863

NOTES:

1. SEE SHEET E-69 AND E-70 FOR LEGEND, NOTES, AND ABBREVIATIONS.
2. FOR ACCURATE RIGHT OF WAY DATA, CONTACT RIGHT OF WAY ENGINEERING AT THE DISTRICT OFFICE.

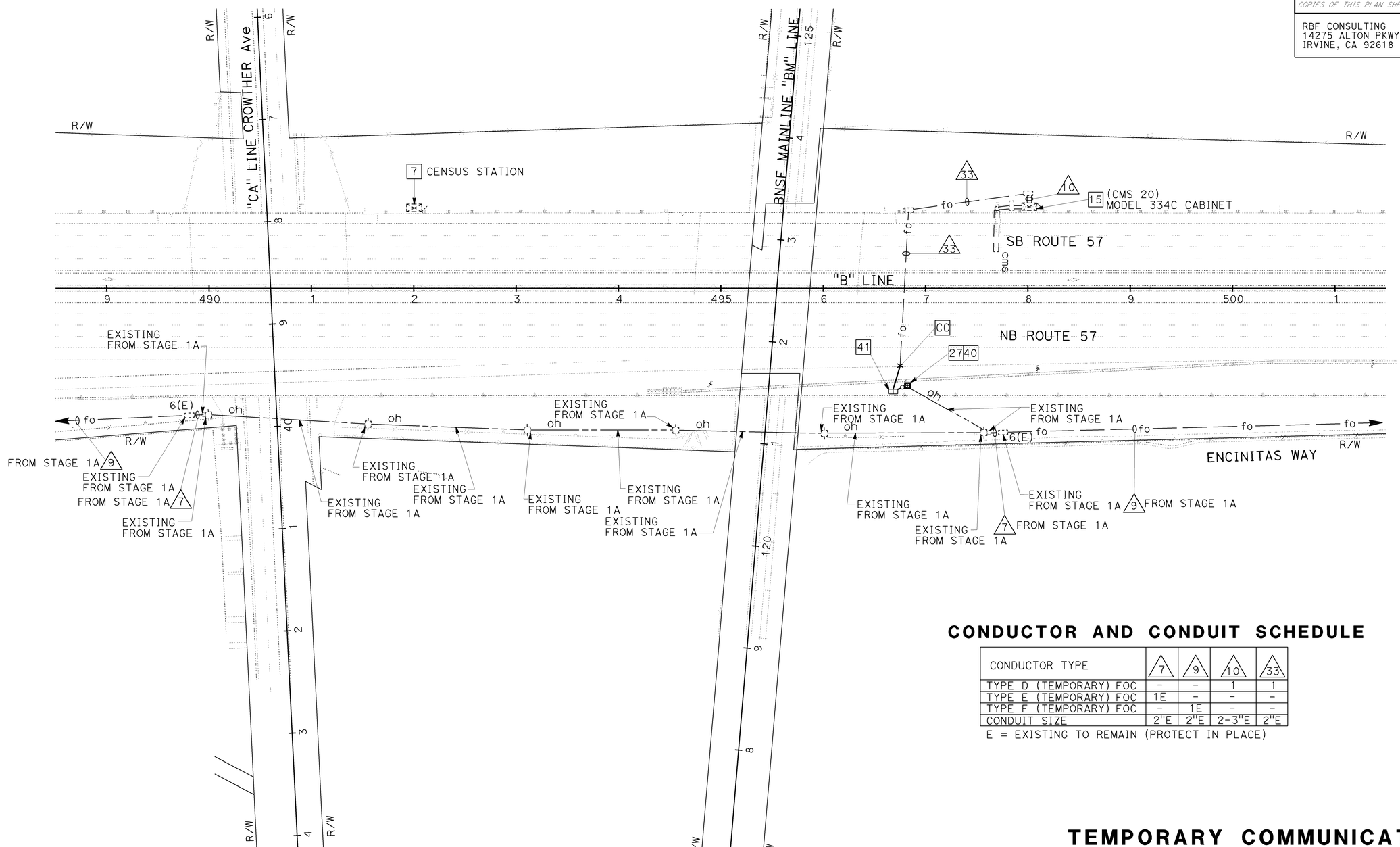

CONDUCTOR AND CONDUIT SCHEDULE

CONDUCTOR TYPE	7	9	10	33
TYPE D (TEMPORARY) FOC	-	-	1	1
TYPE E (TEMPORARY) FOC	1E	-	-	-
TYPE F (TEMPORARY) FOC	-	1E	-	-
CONDUIT SIZE	2"E	2"E	2-3"E	2"E

E = EXISTING TO REMAIN (PROTECT IN PLACE)

TEMPORARY COMMUNICATION SYSTEM
STAGE 2B

SCALE: 1" = 50'

E-85

THIS PLAN IS ACCURATE FOR ELECTRICAL WORK ONLY.

STATE OF CALIFORNIA - DEPARTMENT OF TRANSPORTATION
Caltrans
CONSULTANT FUNCTIONAL SUPERVISOR: CARLOS A. ORTIZ
CALCULATED-DESIGNED BY: JESSICA PARRENO
CHECKED BY: ARMANDO SOLIS
REVISED BY
DATE REVISED

H:\pdata\10105878\Admin\submittals\2009-06-29 FINAL Submittal\100% ELECTRONIC SUBMITTAL - MERGED FILES\2009\2-5\ffic\c0F031ua085.dgn

LAST REVISION 08-01-08
DATE PLOTTED => 21-DEC-2009
TIME PLOTTED => 12:51

BORDER LAST REVISED 4/11/2008
RELATIVE BORDER SCALE IS IN INCHES 0 1 2 3
USERNAME => s135318
DGN FILE => c0F031ua085.dgn
CU 12220
EA 0F0311

Dist	COUNTY	ROUTE	POST MILES TOTAL PROJECT	SHEET No.	TOTAL SHEETS
12	Ora	57	16.2/18.6	654	960

Mark J. Esposito 7/15/09
REGISTERED CIVIL ENGINEER DATE

12-14-09
PLANS APPROVAL DATE

REGISTERED PROFESSIONAL ENGINEER MARK J. ESPOSITO No. 69921 Exp. 9-30-10 CIVIL STATE OF CALIFORNIA

THE STATE OF CALIFORNIA OR ITS OFFICERS OR AGENTS SHALL NOT BE RESPONSIBLE FOR THE ACCURACY OR COMPLETENESS OF SCANNED COPIES OF THIS PLAN SHEET.

RBF CONSULTING
14275 ALTON PKWY
IRVINE, CA 92618

OCTA
550 S. MAIN STREET
ORANGE, CA 92863

NOTES:

1. SEE SHEET E-69 AND E-70 FOR LEGEND, NOTES, AND ABBREVIATIONS.
2. FOR COMPLETE RIGHT OF WAY AND ACCURATE ACCESS DATA, SEE RIGHT OF WAY RECORD MAPS AT DISTRICT OFFICE.

CONDUCTOR AND CONDUIT SCHEDULE

CONDUCTOR TYPE	1	2	3	17
TYPE A FOC	1E	-	-	1N
TYPE B FOC	1E	-	-	1N
TYPE C FOC	1E	-	-	1N
TYPE D FOC	1E	-	1E	-
CONDUIT SIZE	4"E	4"E	4"E	4"E

E = EXISTING TO REMAIN
N = NEW

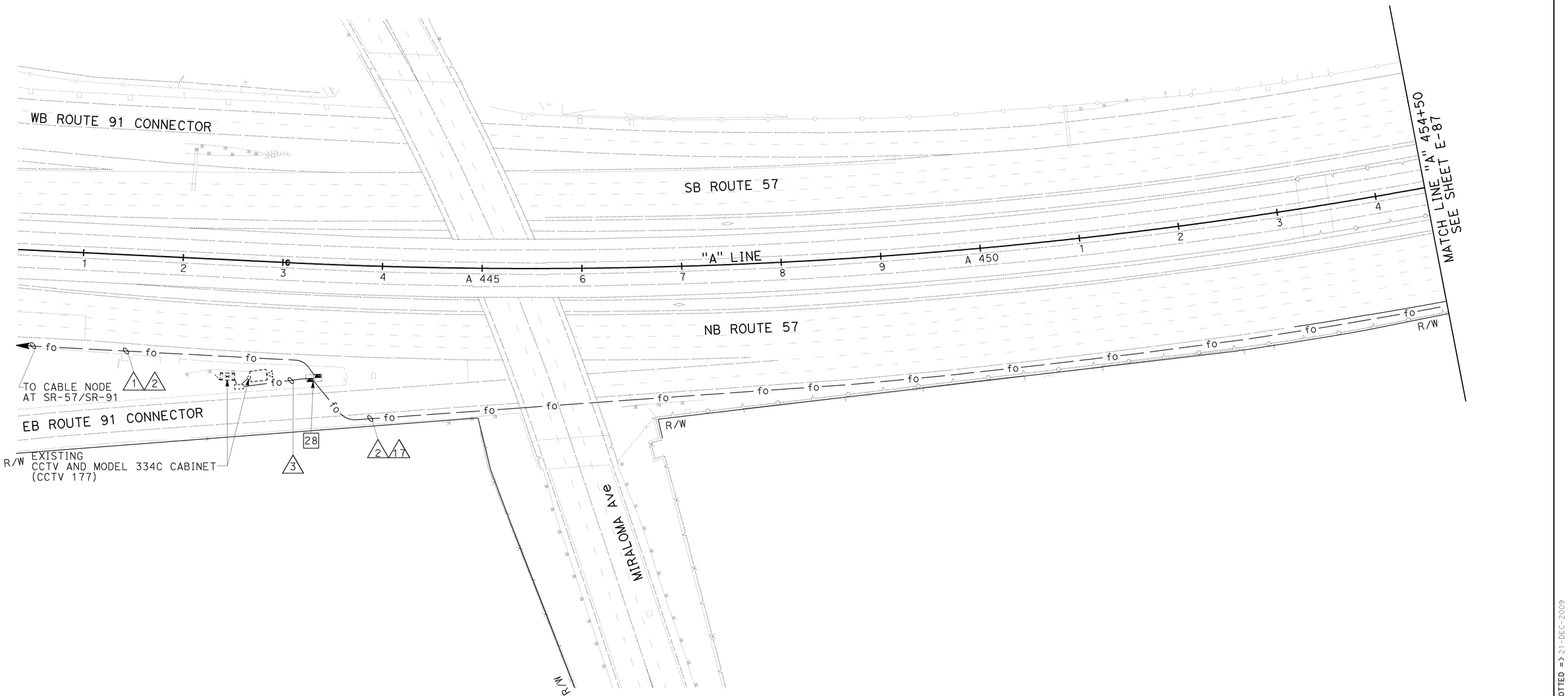

COMMUNICATION SYSTEM

SCALE: 1" = 50'

E-86

THIS PLAN IS ACCURATE FOR ELECTRICAL WORK ONLY.

STATE OF CALIFORNIA - DEPARTMENT OF TRANSPORTATION
Caltrans
CONSULTANT FUNCTIONAL SUPERVISOR: CARLOS A. ORTIZ
CALCULATED-DESIGNED BY: JESSICA PARRENO
CHECKED BY: ARMANDO SOLIS
REVISED BY
DATE REVISED

H:\pdata\10105878\Admin\submittals\2009-06-29 FINAL Submittal\100% ELECTRONIC SUBMITTAL - MERGED FILES\2009\12-15\ffic\c0F031ua086.dgn

LAST REVISION 08-01-08
DATE PLOTTED => 21-DEC-2009
TIME PLOTTED => 12:51

BORDER LAST REVISED 4/11/2008
RELATIVE BORDER SCALE IS IN INCHES 0 1 2 3
USERNAME => s135318
DGN FILE => c0F031ua086.dgn
CU 12220
EA 0F0311

Dist	COUNTY	ROUTE	POST MILES TOTAL PROJECT	SHEET No.	TOTAL SHEETS
12	Ora	57	16.2/18.6	655	960

Mark J. Esposito 7/15/09
REGISTERED CIVIL ENGINEER DATE

MARK J. ESPOSITO No. 69921 Exp. 9-30-10 CIVIL — REGISTERED PROFESSIONAL ENGINEER — STATE OF CALIFORNIA

12-14-09
PLANS APPROVAL DATE

THE STATE OF CALIFORNIA OR ITS OFFICERS OR AGENTS SHALL NOT BE RESPONSIBLE FOR THE ACCURACY OR COMPLETENESS OF SCANNED COPIES OF THIS PLAN SHEET.

RBF CONSULTING
14275 ALTON PKWY
IRVINE, CA 92618

OCTA
550 S. MAIN STREET
ORANGE, CA 92863

NOTES:

1. SEE SHEET E-69 AND E-70 FOR LEGEND, NOTES, AND ABBREVIATIONS.

2. FOR COMPLETE RIGHT OF WAY AND ACCURATE ACCESS DATA, SEE RIGHT OF WAY RECORD MAPS AT DISTRICT OFFICE.

CONDUCTOR AND CONDUIT SCHEDULE

CONDUCTOR TYPE	2	17	18	19	20	21	22
TYPE A FOC	–	1	–	1	1	–	–
TYPE B FOC	–	1	–	1	1	–	–
TYPE C FOC	–	1	–	1	1	–	–
TYPE D FOC	–	–	–	–	1	1	1
CONDUIT SIZE	4"E	4"E	4"	4"	4"	2"	2"E

ALL CONDUITS AND CONDUCTORS ARE NEW UNLESS OTHERWISE NOTED.
E=EXISTING TO REMAIN (PROTECT IN PLACE)

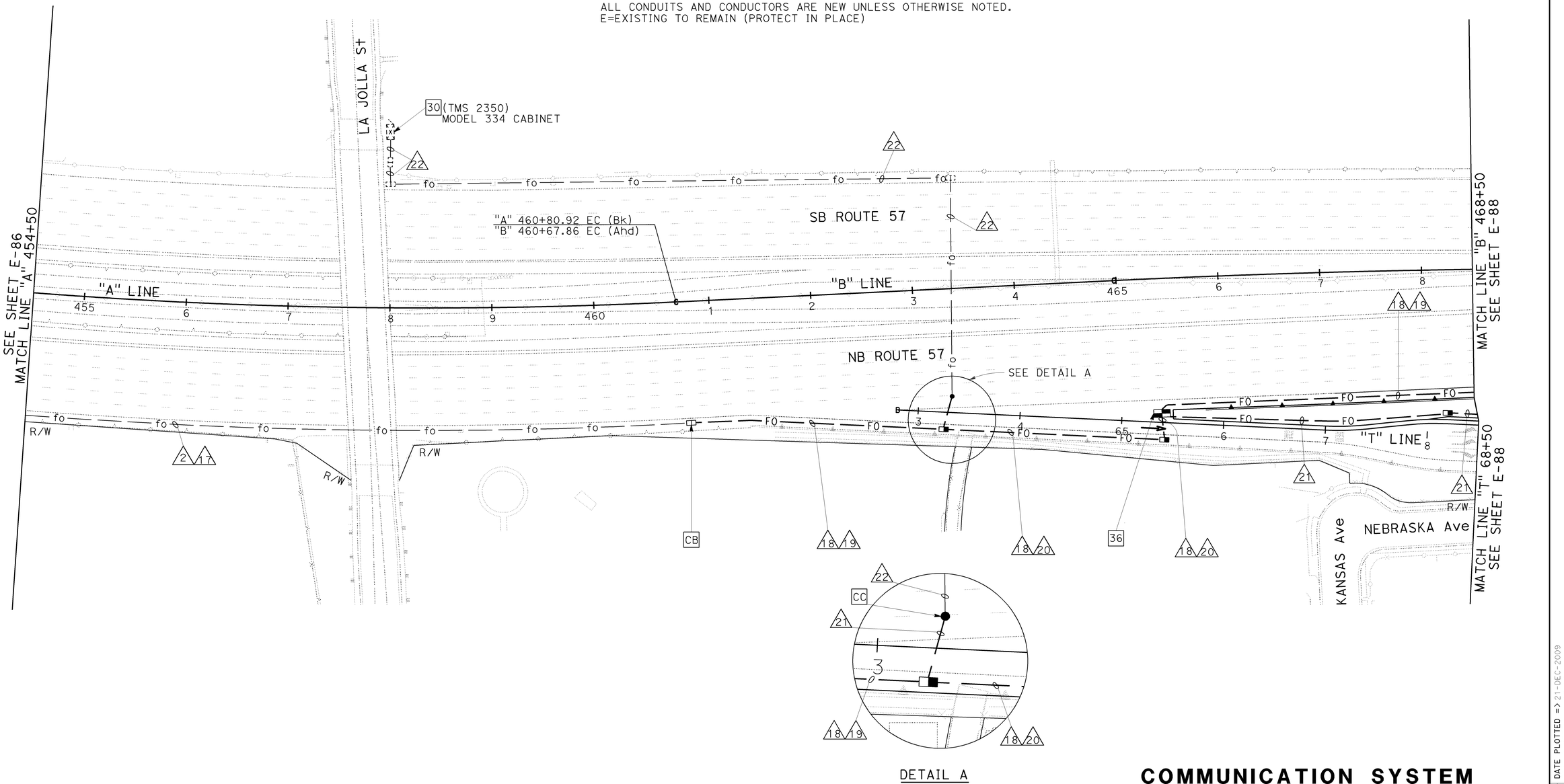

DETAIL A
NO SCALE

COMMUNICATION SYSTEM

SCALE: 1" = 50'

E-87

THIS PLAN IS ACCURATE FOR ELECTRICAL WORK ONLY.

STATE OF CALIFORNIA - DEPARTMENT OF TRANSPORTATION
CONSULTANT FUNCTIONAL SUPERVISOR: CARLOS A. ORTIZ
CALCULATED-DESIGNED BY: JESSICA PARRENO
CHECKED BY: ARMANDO SOLIS
REVISED BY / DATE REVISED

H:\pdata\10105878\Admin\submittals\2009-06-29 FINAL Submittal\100% ELECTRONIC SUBMITTAL - MERGED\DEES2009\traffic\c0F031ua087.dgn

LAST REVISION 08-01-08
DATE PLOTTED => 21-DEC-2009
TIME PLOTTED => 12:51

BORDER LAST REVISED 4/11/2008
RELATIVE BORDER SCALE IS IN INCHES 0 1 2 3
USERNAME => s135318
DGN FILE => c0F031ua087.dgn
CU 12220
EA 0F0311

Dist	COUNTY	ROUTE	POST MILES TOTAL PROJECT	SHEET No.	TOTAL SHEETS
12	Ora	57	16.2/18.6	656	960

Mark J. Esposito 7/15/09
REGISTERED CIVIL ENGINEER DATE

12-14-09
PLANS APPROVAL DATE

REGISTERED PROFESSIONAL ENGINEER
MARK J. ESPOSITO
No. 69921
Exp. 9-30-10
CIVIL
STATE OF CALIFORNIA

THE STATE OF CALIFORNIA OR ITS OFFICERS OR AGENTS SHALL NOT BE RESPONSIBLE FOR THE ACCURACY OR COMPLETENESS OF SCANNED COPIES OF THIS PLAN SHEET.

RBF CONSULTING
14275 ALTON PKWY
IRVINE, CA 92618

OCTA
550 S. MAIN STREET
ORANGE, CA 92863

NOTES:

1. SEE SHEET E-69 AND E-70 FOR LEGEND, NOTES, AND ABBREVIATIONS.
2. FOR COMPLETE RIGHT OF WAY AND ACCURATE ACCESS DATA, SEE RIGHT OF WAY RECORD MAPS AT DISTRICT OFFICE.

CONDUCTOR AND CONDUIT SCHEDULE

CONDUCTOR TYPE	18	19	20	21	22	23	25	26
TYPE A FOC	-	1	1	-	-	-	-	-
TYPE B FOC	-	1	1	-	-	-	-	-
TYPE C FOC	-	1	1	-	-	-	-	-
TYPE D FOC	-	-	1	1	1	1	1	2
12 PR #22 SIC	-	-	-	-	-	1E	-	-
CONDUIT SIZE	4"	4"	4"	2"	2"E	1½"E	2-3"E	2"

ALL CONDUITS AND CONDUCTORS ARE NEW UNLESS OTHERWISE NOTED.
E=EXISTING TO REMAIN

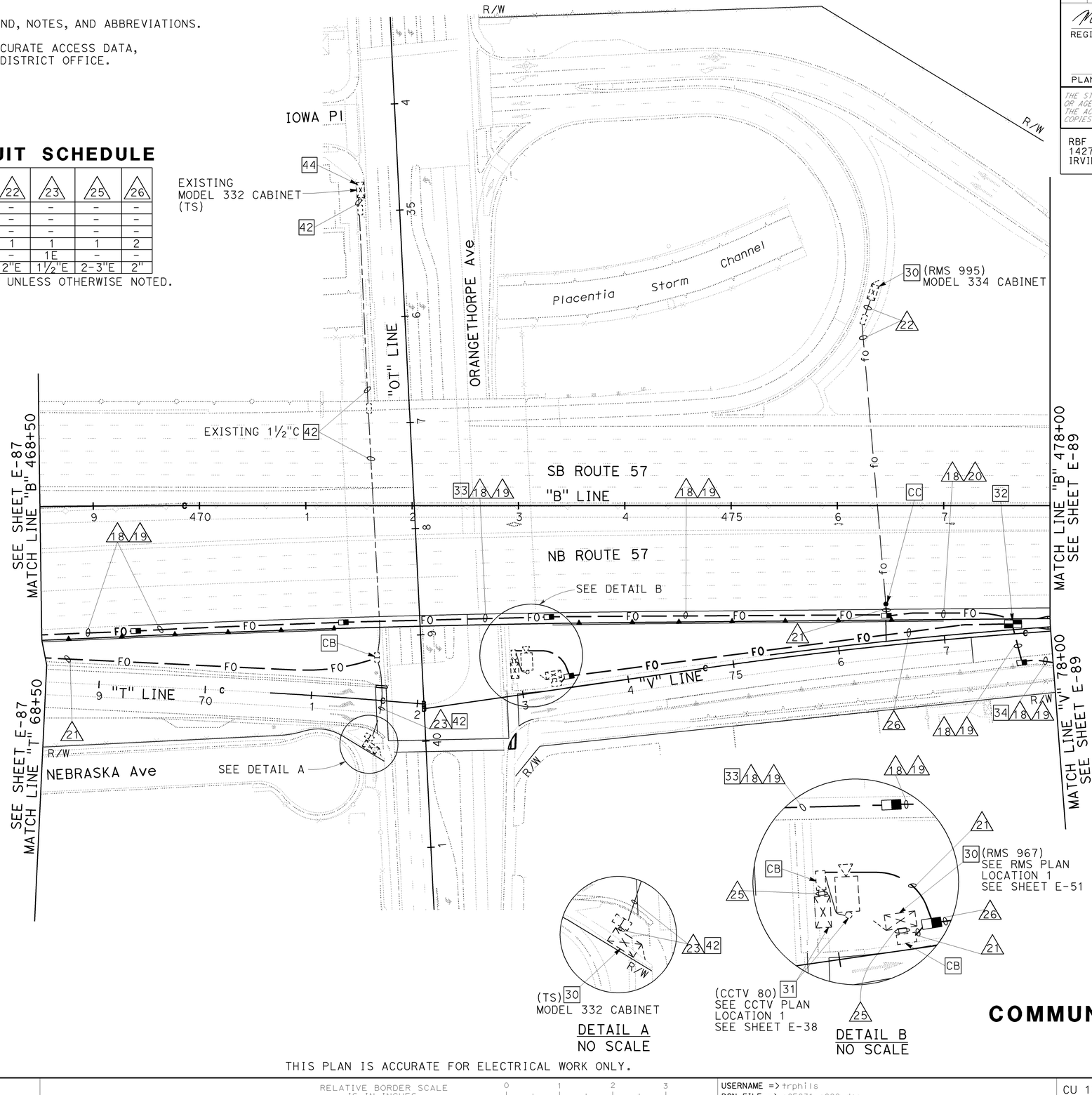

COMMUNICATION SYSTEM

SCALE: 1" = 50'

E-88

THIS PLAN IS ACCURATE FOR ELECTRICAL WORK ONLY.

STATE OF CALIFORNIA - DEPARTMENT OF TRANSPORTATION
Caltrans
CONSULTANT FUNCTIONAL SUPERVISOR: CARLOS A. ORTIZ
CALCULATED-DESIGNED BY: JESSICA PARRENO
CHECKED BY: ARMANDO SOLIS
REVISED BY
DATE REVISED

LAST REVISION 08-01-08
DATE PLOTTED => 21-DEC-2009
TIME PLOTTED => 12:27

BORDER LAST REVISED 4/11/2008
RELATIVE BORDER SCALE IS IN INCHES 0 1 2 3
USERNAME => trphils
DGN FILE => c0F031ua088.dgn
CU 12220
EA 0F0311

NOTES:

1. SEE SHEET E-69 AND E-70 FOR LEGEND, NOTES, AND ABBREVIATIONS.
2. FOR ACCURATE RIGHT OF WAY DATA, CONTACT RIGHT OF WAY ENGINEERING AT THE DISTRICT OFFICE.

Dist	COUNTY	ROUTE	POST MILES TOTAL PROJECT	SHEET No.	TOTAL SHEETS
12	Ora	57	16.2/18.6	657	960

Mark J. Esposito 7/15/09
REGISTERED CIVIL ENGINEER DATE

12-14-09
PLANS APPROVAL DATE

REGISTERED PROFESSIONAL ENGINEER — MARK J. ESPOSITO — No. 69921 — Exp. 9-30-10 — CIVIL — STATE OF CALIFORNIA

THE STATE OF CALIFORNIA OR ITS OFFICERS OR AGENTS SHALL NOT BE RESPONSIBLE FOR THE ACCURACY OR COMPLETENESS OF SCANNED COPIES OF THIS PLAN SHEET.

RBF CONSULTING
14275 ALTON PKWY
IRVINE, CA 92618

OCTA
550 S. MAIN STREET
ORANGE, CA 92863

CONDUCTOR AND CONDUIT SCHEDULE

CONDUCTOR TYPE	18	19
TYPE A FOC	-	1
TYPE B FOC	-	1
TYPE C FOC	-	1
CONDUIT SIZE	4"	4"

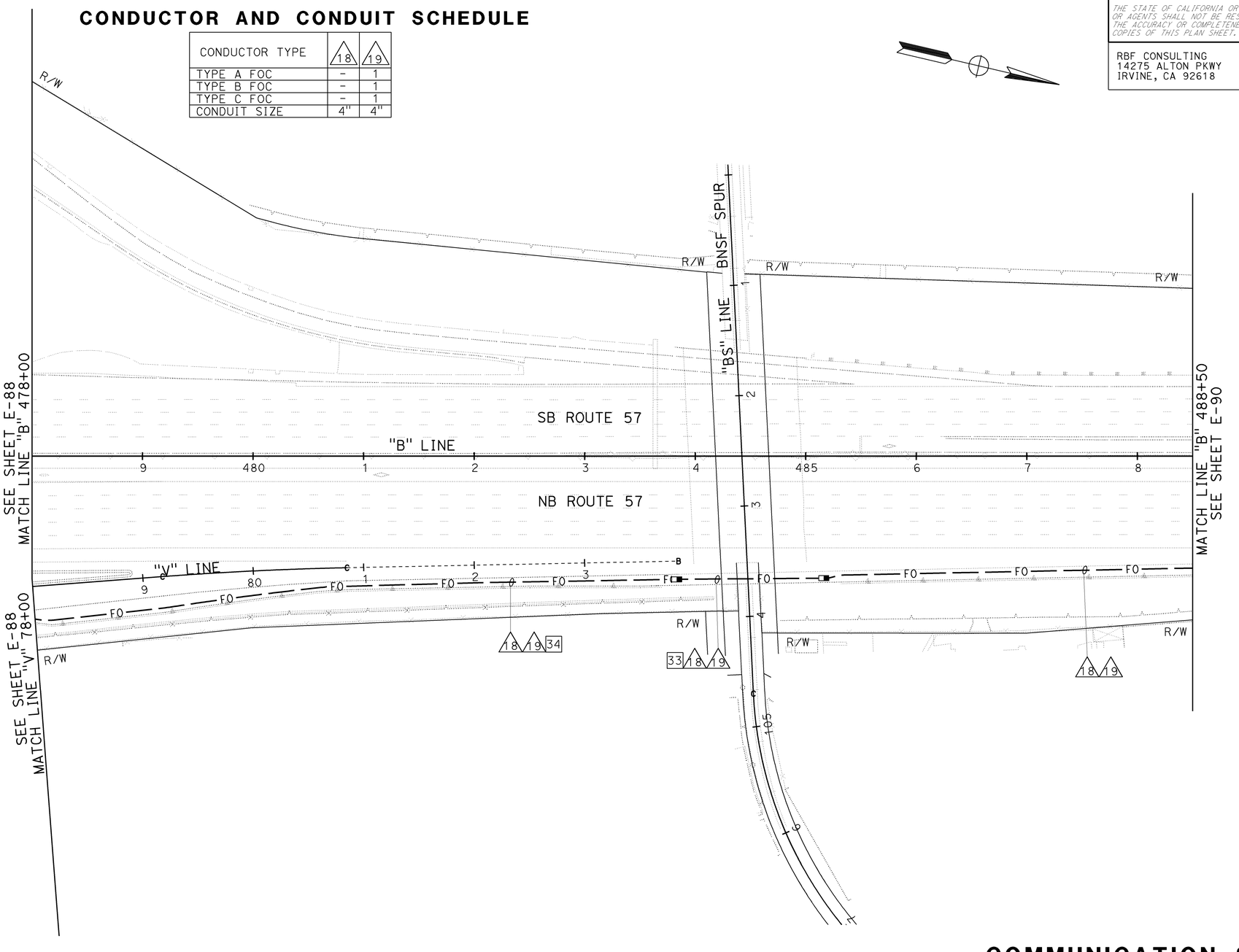

COMMUNICATION SYSTEM

SCALE: 1" = 50'

E-89

THIS PLAN IS ACCURATE FOR ELECTRICAL WORK ONLY.

STATE OF CALIFORNIA - DEPARTMENT OF TRANSPORTATION
CONSULTANT FUNCTIONAL SUPERVISOR: CARLOS A. ORTIZ
CALCULATED-DESIGNED BY: JESSICA PARRENO
CHECKED BY: ARMANDO SOLIS
REVISED BY | DATE REVISED

LAST REVISION 08-01-08
DATE PLOTTED => 21-DEC-2009
TIME PLOTTED => 12:27

BORDER LAST REVISED 4/11/2008
RELATIVE BORDER SCALE IS IN INCHES 0 1 2 3
USERNAME => trphils
DGN FILE => c0F031ua089.dgn
CU 12220
EA 0F0311

NOTES:

1. SEE SHEET E-69 AND E-70 FOR LEGEND, NOTES, AND ABBREVIATIONS.
2. FOR ACCURATE RIGHT OF WAY DATA, CONTACT RIGHT OF WAY ENGINEERING AT THE DISTRICT OFFICE.

Dist	COUNTY	ROUTE	POST MILES TOTAL PROJECT	SHEET No.	TOTAL SHEETS
12	Ora	57	16.2/18.6	658	960

Mark J. Esposito 7/15/09
REGISTERED CIVIL ENGINEER DATE

12-14-09
PLANS APPROVAL DATE

REGISTERED PROFESSIONAL ENGINEER
MARK J. ESPOSITO
No. 69921
Exp. 9-30-10
CIVIL
STATE OF CALIFORNIA

THE STATE OF CALIFORNIA OR ITS OFFICERS OR AGENTS SHALL NOT BE RESPONSIBLE FOR THE ACCURACY OR COMPLETENESS OF SCANNED COPIES OF THIS PLAN SHEET.

RBF CONSULTING
14275 ALTON PKWY
IRVINE, CA 92618

OCTA
550 S. MAIN STREET
ORANGE, CA 92863

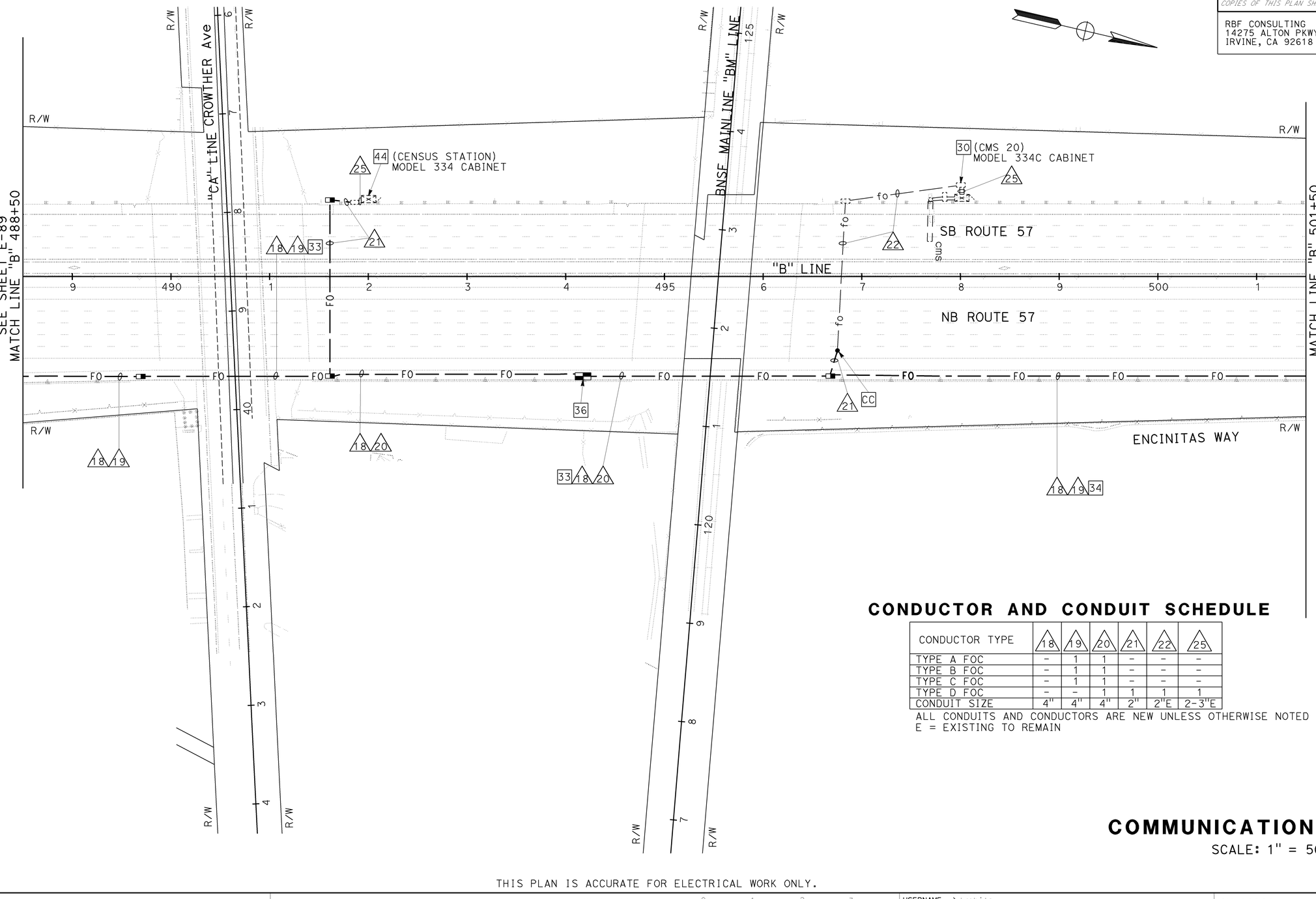

CONDUCTOR AND CONDUIT SCHEDULE

CONDUCTOR TYPE	18	19	20	21	22	25
TYPE A FOC	–	1	1	–	–	–
TYPE B FOC	–	1	1	–	–	–
TYPE C FOC	–	1	1	–	–	–
TYPE D FOC	–	–	1	1	1	1
CONDUIT SIZE	4"	4"	4"	2"	2"E	2-3"E

ALL CONDUITS AND CONDUCTORS ARE NEW UNLESS OTHERWISE NOTED
E = EXISTING TO REMAIN

COMMUNICATION SYSTEM

SCALE: 1" = 50'

E-90

THIS PLAN IS ACCURATE FOR ELECTRICAL WORK ONLY.

STATE OF CALIFORNIA - DEPARTMENT OF TRANSPORTATION
Caltrans
CONSULTANT FUNCTIONAL SUPERVISOR: CARLOS A. ORTIZ
CALCULATED-DESIGNED BY: JESSICA PARRENO
CHECKED BY: ARMANDO SOLIS
REVISED BY
DATE REVISED
LAST REVISION DATE PLOTTED => 21-DEC-2009
TIME PLOTTED => 12:27

H:\pdata\10105878\Admin\submittals\2009-06-29 FINAL Submittal\100% ELECTRONIC SUBMITTAL - MERGED\DESIGN\Traffic\c0F031ua090.dgn

BORDER LAST REVISED 4/11/2008
RELATIVE BORDER SCALE IS IN INCHES 0 1 2 3
USERNAME => trphils
DGN FILE => c0F031ua090.dgn
CU 12220
EA 0F0311

Dist	COUNTY	ROUTE	POST MILES TOTAL PROJECT	SHEET No.	TOTAL SHEETS
12	Ora	57	16.2/18.6	659	960

Mark J. Esposito 7/15/09
REGISTERED CIVIL ENGINEER DATE

12-14-09
PLANS APPROVAL DATE

REGISTERED PROFESSIONAL ENGINEER MARK J. ESPOSITO No. 69921 Exp. 9-30-10 CIVIL STATE OF CALIFORNIA

THE STATE OF CALIFORNIA OR ITS OFFICERS OR AGENTS SHALL NOT BE RESPONSIBLE FOR THE ACCURACY OR COMPLETENESS OF SCANNED COPIES OF THIS PLAN SHEET.

RBF CONSULTING
14275 ALTON PKWY
IRVINE, CA 92618

OCTA
550 S. MAIN STREET
ORANGE, CA 92863

NOTES:

1. SEE SHEET E-69 AND E-70 FOR LEGEND, NOTES, AND ABBREVIATIONS.
2. FOR ACCURATE RIGHT OF WAY DATA, CONTACT RIGHT OF WAY ENGINEERING AT THE DISTRICT OFFICE.

CONDUCTOR AND CONDUIT SCHEDULE

CONDUCTOR TYPE	18	19	20	26
TYPE A FOC	-	1	1	-
TYPE B FOC	-	1	1	-
TYPE C FOC	-	1	1	-
TYPE D FOC	-	-	1	2
CONDUIT SIZE	4"	4"	4"	2"

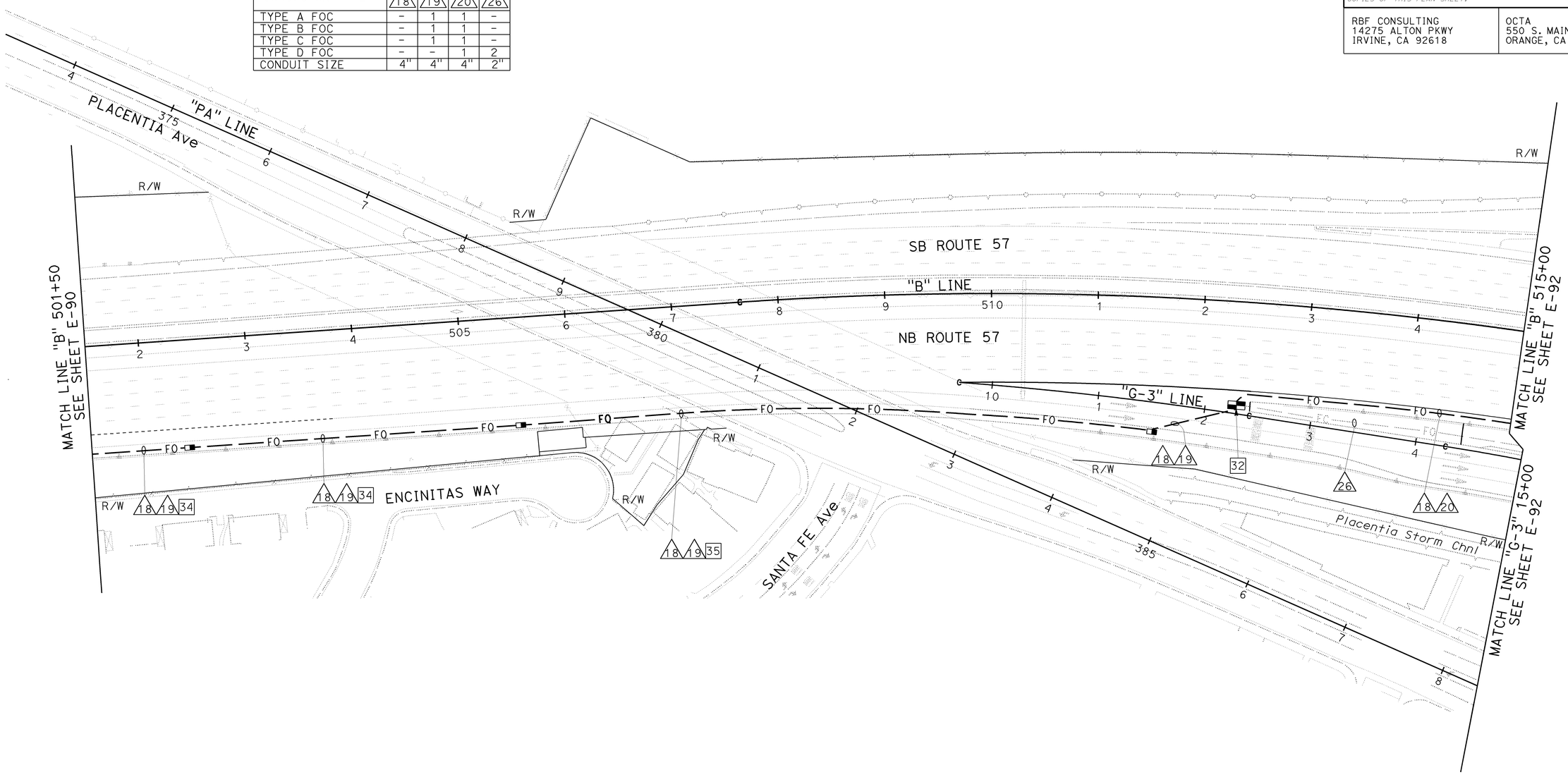

COMMUNICATION SYSTEM

SCAL: 1" = 50'

E-91

THIS PLAN ACCURATE FOR ELECTRICAL WORK ONLY.

STATE OF CALIFORNIA - DEPARTMENT OF TRANSPORTATION
Caltrans

CONSULTANT FUNCTIONAL SUPERVISOR: CARLOS A. ORTIZ
CALCULATED-DESIGNED BY: JESSICA PARRENO
CHECKED BY: ARMANDO SOLIS
REVISED BY
DATE REVISED

H:\pdata\10105878\Admin\submittals\2009-06-29 FINAL Submittal\100% ELECTRONIC SUBMITTAL - MERGED\FDEES2009\12-27 Traffic\c0F031ua091.dgn

LAST REVISION 08-01-08
DATE PLOTTED => 21-DEC-2009
TIME PLOTTED => 12:27

BORDER LAST REVISED 4/11/2008
RELATIVE BORDER SCALE IS IN INCHES 0 1 2 3
USERNAME => trphils
DGN FILE => c0F031ua091.dgn
CU 12220
EA 0F0311

Dist	COUNTY	ROUTE	POST MILES TOTAL PROJECT	SHEET No.	TOTAL SHEETS
12	Ora	57	16.2/18.6	660	960

Mark J. Esposito 7/15/09
REGISTERED CIVIL ENGINEER DATE

12-14-09
PLANS APPROVAL DATE

REGISTERED PROFESSIONAL ENGINEER MARK J. ESPOSITO No. 69921 Exp. 9-30-10 CIVIL STATE OF CALIFORNIA

THE STATE OF CALIFORNIA OR ITS OFFICERS OR AGENTS SHALL NOT BE RESPONSIBLE FOR THE ACCURACY OR COMPLETENESS OF SCANNED COPIES OF THIS PLAN SHEET.

RBF CONSULTING
14275 ALTON PKWY
IRVINE, CA 92618

OCTA
550 S. MAIN STREET
ORANGE, CA 92863

NOTES:

1. SEE SHEET E-69 AND E-70 FOR LEGEND, NOTES, AND ABBREVIATIONS.
2. FOR COMPLETE RIGHT OF WAY AND ACCURATE ACCESS DATA, SEE RIGHT OF WAY RECORD MAPS AT DISTRICT OFFICE.

CONDUCTOR AND CONDUIT SCHEDULE

CONDUCTOR TYPE	18	19	20	21	22	24	26	35
TYPE A FOC	-	1	1	-	-	-	-	-
TYPE B FOC	-	1	1	-	-	-	-	-
TYPE C FOC	-	1	1	-	-	-	-	-
TYPE D FOC	-	-	1	1	1	1	2	1
CONDUIT SIZE	4"	4"	4"	2"	2"E	1½"E	2"	2-3"E

ALL CONDUITS AND CONDUCTORS ARE NEW UNLESS OTHERWISE NOTED
E=EXISTING TO REMAIN

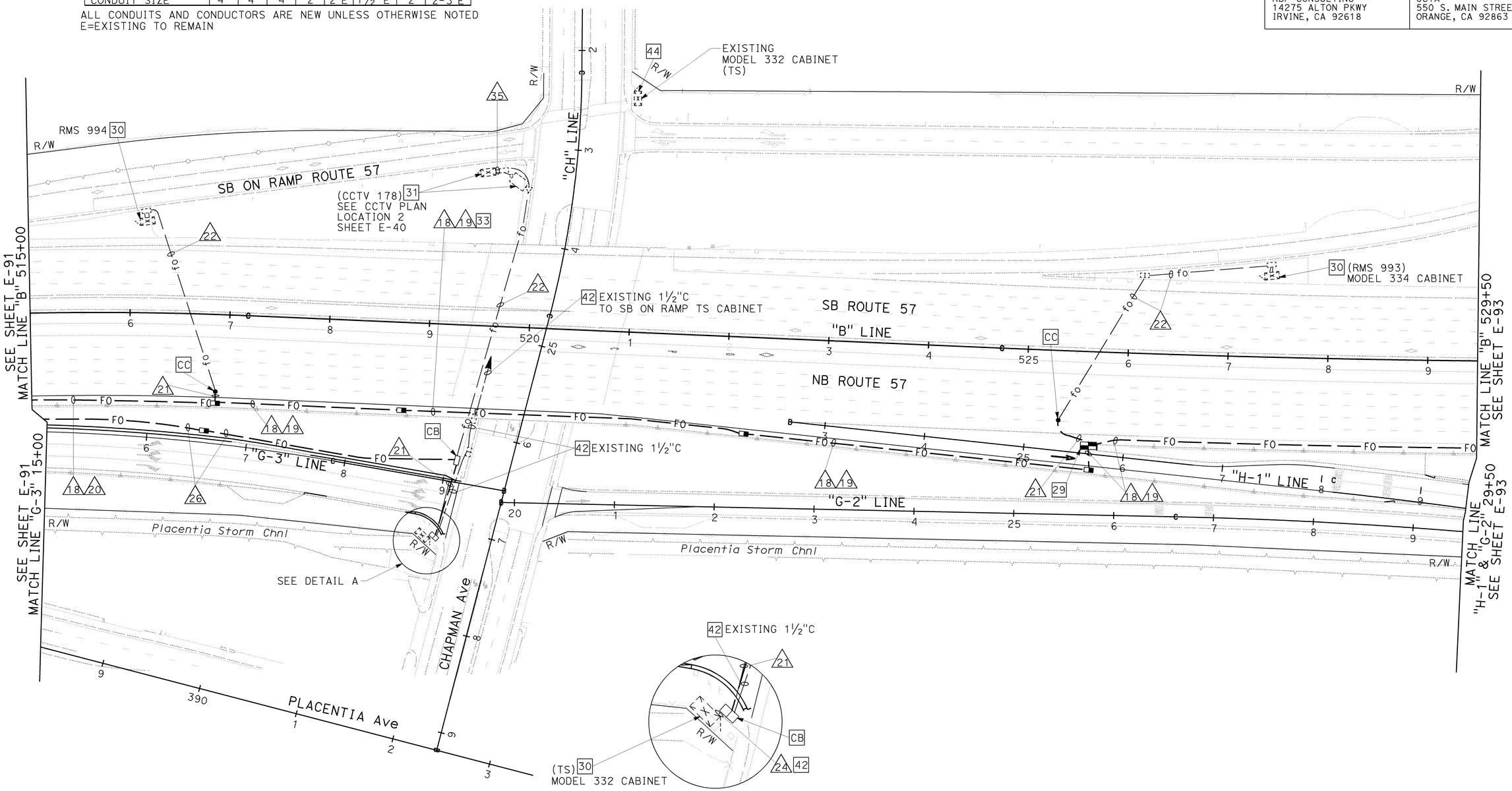

DETAIL A
NO SCALE

COMMUNICATION SYSTEM

SCALE: 1" = 50'

E-92

THIS PLAN IS ACCURATE FOR ELECTRICAL WORK ONLY

STATE OF CALIFORNIA - DEPARTMENT OF TRANSPORTATION
Caltrans
CONSULTANT FUNCTIONAL SUPERVISOR: CARLOS A. ORTIZ
CALCULATED-DESIGNED BY: JESSICA PARRENO
CHECKED BY: ARMANDO SOLIS
REVISED BY
DATE REVISED

H:\pdata\10105878\Admin\submittals\2009-06-29 FINAL Submittal\100% ELECTRONIC SUBMITTAL - MERGED\FIELDS2009\12-Traffic\c0F031ua092.dgn

LAST REVISION 08-01-08
DATE PLOTTED => 21-DEC-2009
TIME PLOTTED => 12:27

NOTES:

1. SEE SHEET E-69 AND E-70 FOR LEGEND, NOTES, AND ABBREVIATIONS.
2. FOR COMPLETE RIGHT OF WAY AND ACCURATE ACCESS DATA, SEE RIGHT OF WAY RECORD MAPS AT DISTRICT OFFICE.

CONDUCTOR AND CONDUIT SCHEDULE

CONDUCTOR TYPE	18	19	21	25	26	27
TYPE A FOC	-	1	-	-	-	-
TYPE B FOC	-	1	-	-	-	-
TYPE C FOC	-	1	-	-	-	-
TYPE D FOC	-	-	1	1	2	3
CONDUIT SIZE	4"	4"	2"	2-3"E	2"	2"

ALL CONDUITS AND CONDUCTORS ARE NEW UNLESS OTHERWISE NOTED
E=EXISTING TO REMAIN

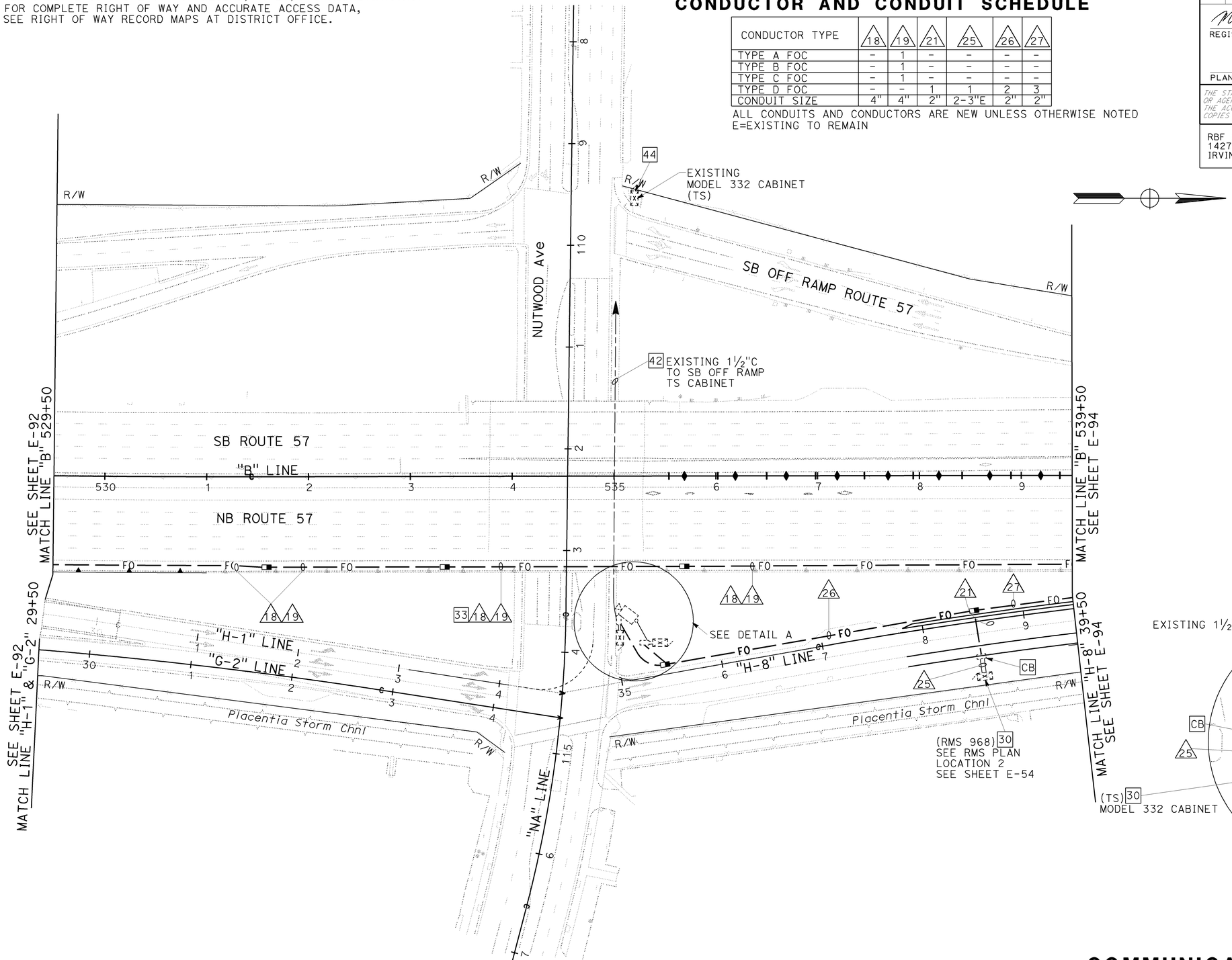

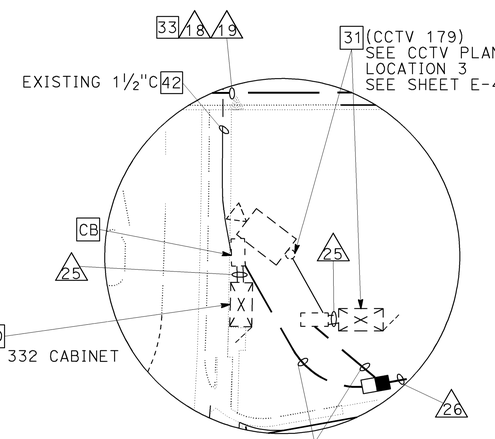

DETAIL A
NO SCALE

COMMUNICATION SYSTEM

SCALE: 1" = 50'

E-93

THIS PLAN IS ACCURATE FOR ELECTRICAL WORK ONLY

Dist	COUNTY	ROUTE	POST MILES TOTAL PROJECT	SHEET No.	TOTAL SHEETS
12	Ora	57	16.2/18.6	661	960

Mark J. Esposito 7/15/09
REGISTERED CIVIL ENGINEER DATE

MARK J. ESPOSITO No. 69921 Exp. 9-30-10 CIVIL — REGISTERED PROFESSIONAL ENGINEER — STATE OF CALIFORNIA

12-14-09
PLANS APPROVAL DATE

THE STATE OF CALIFORNIA OR ITS OFFICERS OR AGENTS SHALL NOT BE RESPONSIBLE FOR THE ACCURACY OR COMPLETENESS OF SCANNED COPIES OF THIS PLAN SHEET.

RBF CONSULTING
14275 ALTON PKWY
IRVINE, CA 92618

OCTA
550 S. MAIN STREET
ORANGE, CA 92863

STATE OF CALIFORNIA - DEPARTMENT OF TRANSPORTATION
Caltrans
CONSULTANT FUNCTIONAL SUPERVISOR: CARLOS A. ORTIZ
CALCULATED-DESIGNED BY: JESSICA PARRENO
CHECKED BY: ARMANDO SOLIS
REVISED BY
DATE REVISED

H:\pdata\10105878\Admin\submittals\2009-06-29 FINAL Submittal\100% ELECTRONIC SUBMITTAL - MERGED\0F0311_DEES2009_01.dgn
H:\pdata\10105878\Traffic\c0F031ua093.dgn

LAST REVISION 08-01-08
DATE PLOTTED => 21-DEC-2009
TIME PLOTTED => 12:27

BORDER LAST REVISED 4/11/2008
RELATIVE BORDER SCALE IS IN INCHES 0 1 2 3
USERNAME => trphils
DGN FILE => c0F031ua093.dgn
CU 12220
EA 0F0311

Dist	COUNTY	ROUTE	POST MILES TOTAL PROJECT	SHEET No.	TOTAL SHEETS
12	Ora	57	16.2/18.6	662	960

Mark J. Esposito 7/15/09
REGISTERED CIVIL ENGINEER DATE

MARK J. ESPOSITO No. 69921 Exp. 9-30-10 CIVIL — REGISTERED PROFESSIONAL ENGINEER — STATE OF CALIFORNIA

12-14-09
PLANS APPROVAL DATE

THE STATE OF CALIFORNIA OR ITS OFFICERS OR AGENTS SHALL NOT BE RESPONSIBLE FOR THE ACCURACY OR COMPLETENESS OF SCANNED COPIES OF THIS PLAN SHEET.

RBF CONSULTING
14275 ALTON PKWY
IRVINE, CA 92618

OCTA
550 S. MAIN STREET
ORANGE, CA 92863

NOTES:

1. SEE SHEET E-69 AND E-70 FOR LEGEND, NOTES, AND ABBREVIATIONS.
2. FOR ACCURATE RIGHT OF WAY AND ACCESS DATA, CONTACT RIGHT OF WAY ENGINEERING AT THE DISTRICT OFFICE.

CONDUCTOR AND CONDUIT SCHEDULE

CONDUCTOR TYPE	18	19	27
TYPE A FOC	–	1	–
TYPE B FOC	–	1	–
TYPE C FOC	–	1	–
TYPE D FOC	–	–	3
CONDUIT SIZE	4"	4"	2"

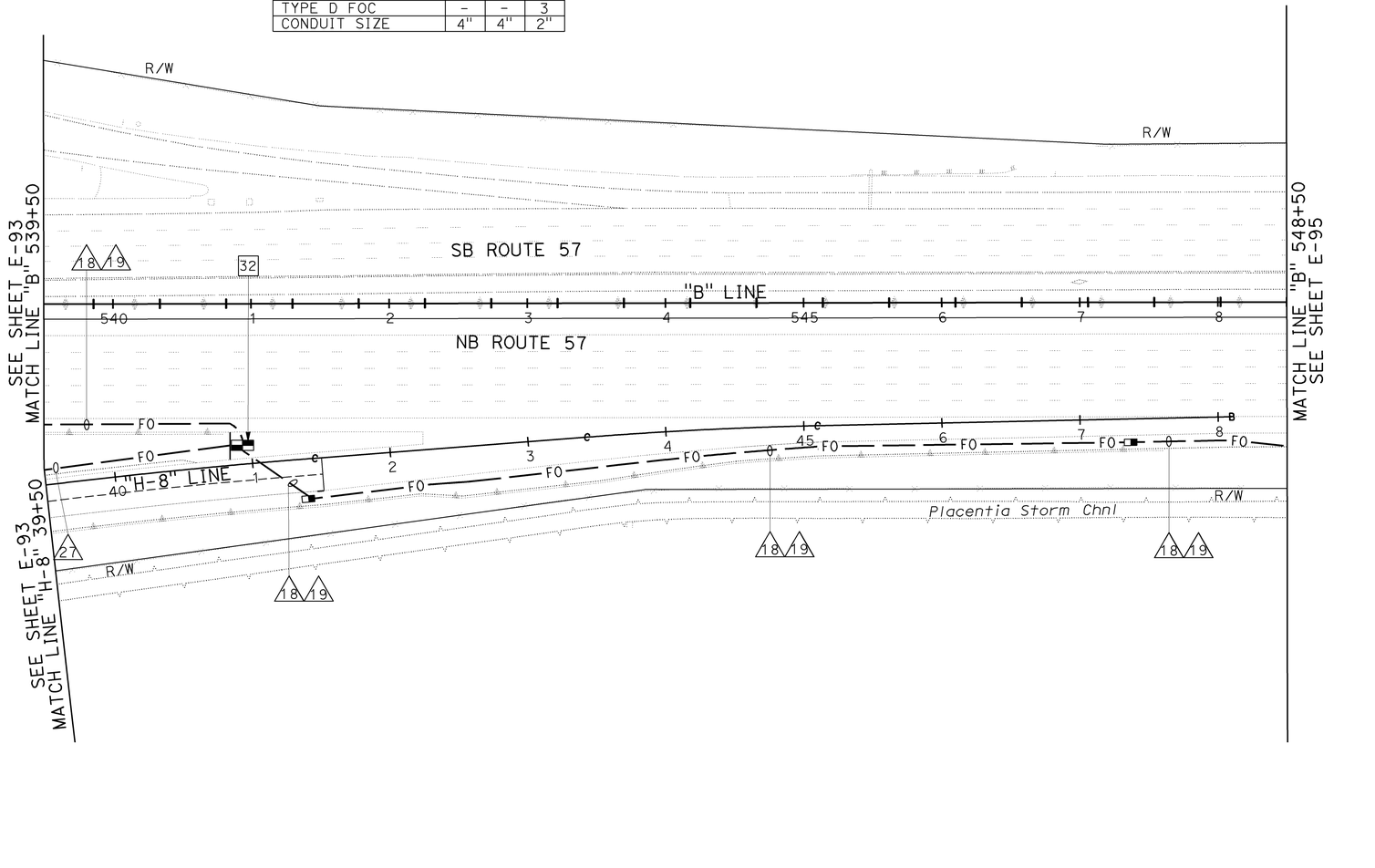

COMMUNICATION SYSTEM

SCALE: 1" = 50'

E-94

THIS PLAN IS ACCURATE FOR ELECTRICAL WORK ONLY.

REVISED BY | DATE REVISED
CALCULATED-DESIGNED BY: JESSICA PARRENO
CHECKED BY: ARMANDO SOLIS
CONSULTANT FUNCTIONAL SUPERVISOR: CARLOS A. ORTIZ
STATE OF CALIFORNIA - DEPARTMENT OF TRANSPORTATION
Caltrans

LAST REVISION | DATE PLOTTED => 21-DEC-2009
08-01-08 | TIME PLOTTED => 12:27

BORDER LAST REVISED 4/11/2008 | RELATIVE BORDER SCALE IS IN INCHES 0 1 2 3 | USERNAME => trphils | DGN FILE => c0F031ua094.dgn | CU 12220 | EA 0F0311

Dist	COUNTY	ROUTE	POST MILES TOTAL PROJECT	SHEET No.	TOTAL SHEETS
12	Ora	57	16.2/18.6	663	960

Mark J. Esposito 7/15/09
REGISTERED CIVIL ENGINEER DATE

12-14-09
PLANS APPROVAL DATE

REGISTERED PROFESSIONAL ENGINEER MARK J. ESPOSITO No. 69921 Exp. 9-30-10 CIVIL STATE OF CALIFORNIA

THE STATE OF CALIFORNIA OR ITS OFFICERS OR AGENTS SHALL NOT BE RESPONSIBLE FOR THE ACCURACY OR COMPLETENESS OF SCANNED COPIES OF THIS PLAN SHEET.

RBF CONSULTING
14275 ALTON PKWY
IRVINE, CA 92618

OCTA
550 S. MAIN STREET
ORANGE, CA 92863

NOTES:

1. SEE SHEET E-69 AND E-70 FOR LEGEND, NOTES, AND ABBREVIATIONS.
2. FOR ACCURATE RIGHT OF WAY AND ACCESS DATA, CONTACT RIGHT OF WAY ENGINEERING AT THE DISTRICT OFFICE.

CONDUCTOR AND CONDUIT SCHEDULE

CONDUCTOR TYPE	18	19
TYPE A FOC	-	1
TYPE B FOC	-	1
TYPE C FOC	-	1
CONDUIT SIZE	4"	4"

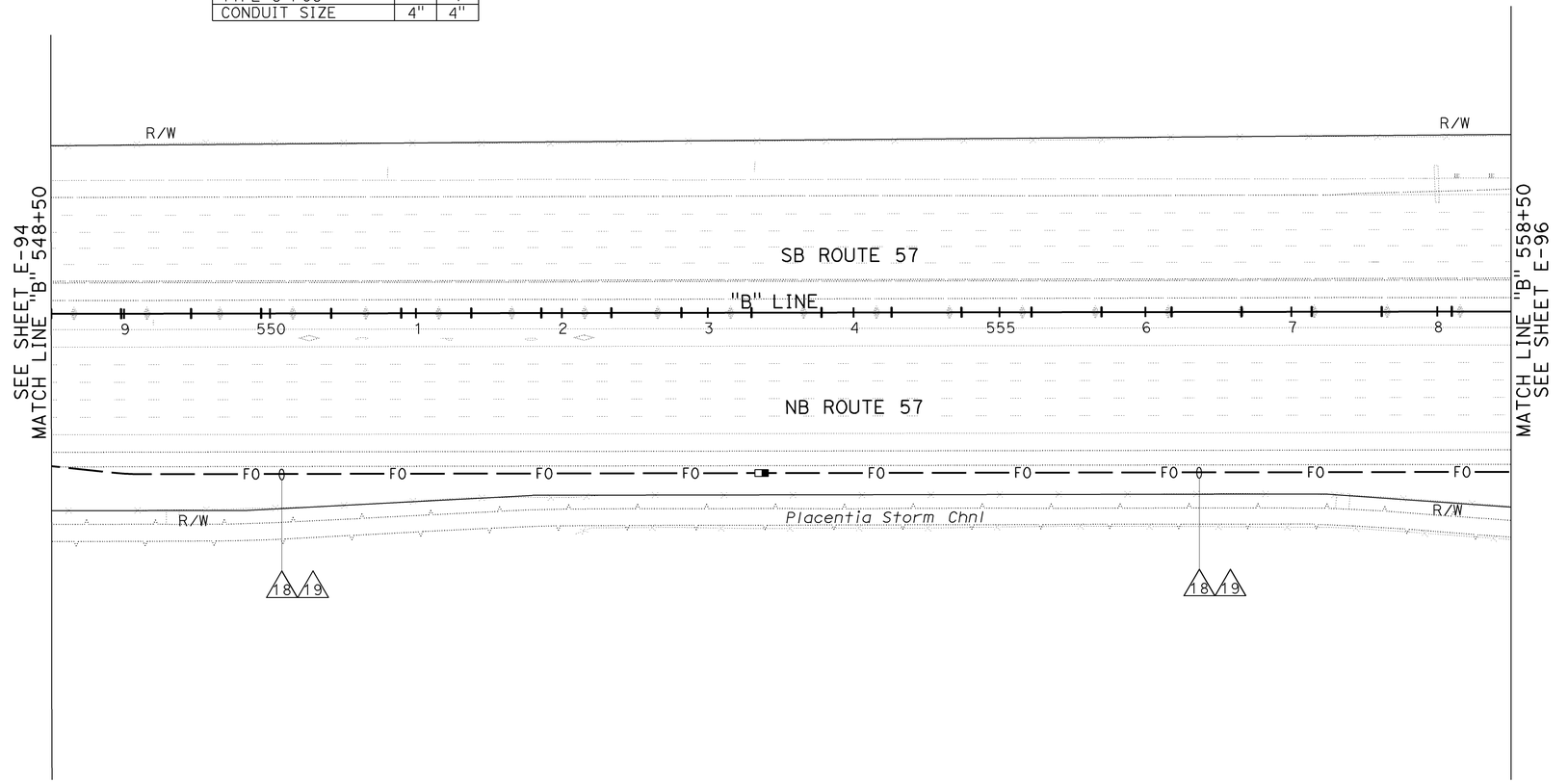

COMMUNICATION SYSTEM

SCALE: 1" = 50'

E-95

THIS PLAN IS ACCURATE FOR ELECTRICAL WORK ONLY.

STATE OF CALIFORNIA - DEPARTMENT OF TRANSPORTATION
Caltrans

CONSULTANT FUNCTIONAL SUPERVISOR: CARLOS A. ORTIZ
CALCULATED-DESIGNED BY: JESSICA PARRENO
CHECKED BY: ARMANDO SOLIS
REVISED BY
DATE REVISED

H:\pdata\10105878\Admin\submittals\2009-06-29 FINAL Submittal\100% ELECTRONIC SUBMITTAL - MERGED FILES\2009\12 Traffic\c0F031ua095.dgn

LAST REVISION 08-01-08
DATE PLOTTED => 21-DEC-2009
TIME PLOTTED => 12:27

BORDER LAST REVISED 4/11/2008
RELATIVE BORDER SCALE IS IN INCHES 0 1 2 3
USERNAME => trphils
DGN FILE => c0F031ua095.dgn
CU 12220
EA 0F0311

NOTES:

1. SEE SHEET E-69 AND E-70 FOR LEGEND, NOTES, AND ABBREVIATIONS.
2. FOR ACCURATE RIGHT OF WAY AND ACCESS DATA, CONTACT RIGHT OF WAY ENGINEERING AT THE DISTRICT OFFICE.

Dist	COUNTY	ROUTE	POST MILES TOTAL PROJECT	SHEET No.	TOTAL SHEETS
12	Ora	57	16.2/18.6	664	960

Mark J. Esposito 7/15/09
REGISTERED CIVIL ENGINEER DATE

12-14-09
PLANS APPROVAL DATE

REGISTERED PROFESSIONAL ENGINEER — MARK J. ESPOSITO No. 69921 Exp. 9-30-10 CIVIL — STATE OF CALIFORNIA

THE STATE OF CALIFORNIA OR ITS OFFICERS OR AGENTS SHALL NOT BE RESPONSIBLE FOR THE ACCURACY OR COMPLETENESS OF SCANNED COPIES OF THIS PLAN SHEET.

RBF CONSULTING
14275 ALTON PKWY
IRVINE, CA 92618

OCTA
550 S. MAIN STREET
ORANGE, CA 92863

CONDUCTOR AND CONDUIT SCHEDULE

CONDUCTOR TYPE	18	19	20	21	22	25
TYPE A FOC	–	1	1	–	–	–
TYPE B FOC	–	1	1	–	–	–
TYPE C FOC	–	1	1	–	–	–
TYPE D FOC	–	–	1	1	1	1
CONDUIT SIZE	4"	4"	4"	2"	2"E	2-3"E

ALL CONDUITS AND CONDUCTORS ARE NEW UNLESS OTHERWISE NOTED
E = EXISTING TO REMAIN

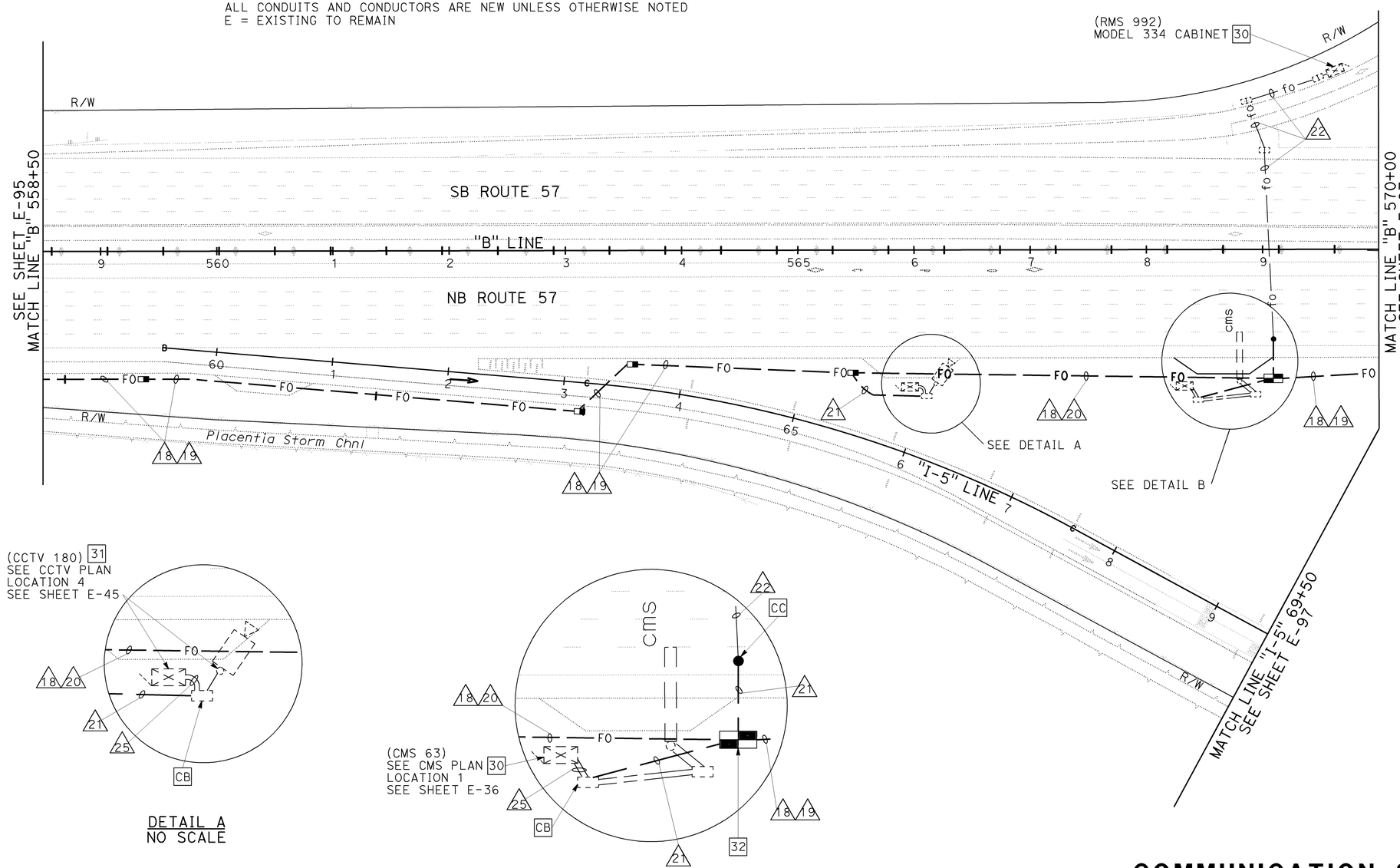

DETAIL A
NO SCALE

DETAIL B
NO SCALE

THIS PLAN IS ACCURATE FOR ELECTRICAL WORK ONLY.

COMMUNICATION SYSTEM

SCALE: 1" = 50'

E-96

STATE OF CALIFORNIA - DEPARTMENT OF TRANSPORTATION
CONSULTANT FUNCTIONAL SUPERVISOR: CARLOS A. ORTIZ
CALCULATED-DESIGNED BY: JESSICA PARRENO
CHECKED BY: ARMANDO SOLIS
REVISED BY
DATE REVISED

H:\pdata\10105878\Admin\submittals\2009-06-29 FINAL Submittal\100% ELECTRONIC SUBMITTAL - MERGED\DESIGN\Traffic\c0F031ua096.dgn

LAST REVISION DATE PLOTTED => 21-DEC-2009
08-01-08 TIME PLOTTED => 13:27

BORDER LAST REVISED 4/11/2008
RELATIVE BORDER SCALE IS IN INCHES 0 1 2 3
USERNAME => trphils
DGN FILE => c0F031ua096.dgn
CU 12220
EA 0F0311

NOTES:

1. SEE SHEET E-69 AND E-70 FOR LEGEND, NOTES, AND ABBREVIATIONS.
2. FOR ACCURATE RIGHT OF WAY AND ACCESS DATA, CONTACT RIGHT OF WAY ENGINEERING AT THE DISTRICT OFFICE.

CONDUCTOR AND CONDUIT SCHEDULE

CONDUCTOR TYPE	18	19	20	21	22	25	26	28	29	30
TYPE A FOC	-	1	1	-	-	-	-	1	-	-
TYPE B FOC	-	1	1	-	-	-	-	1	-	-
TYPE C FOC	-	1	1	-	-	-	-	1	-	-
TYPE D FOC	-	-	1	1	1	1	2	2	1	2
12 PR #22 SIC	-	-	-	-	-	-	-	-	1E	-
CONDUIT SIZE	4"	4"	4"	2"	2"E	2-3"E	2"	4"	2"E	2"E

ALL CONDUITS AND CONDUCTORS ARE NEW UNLESS OTHERWISE NOTED
E = EXISTING TO REMAIN

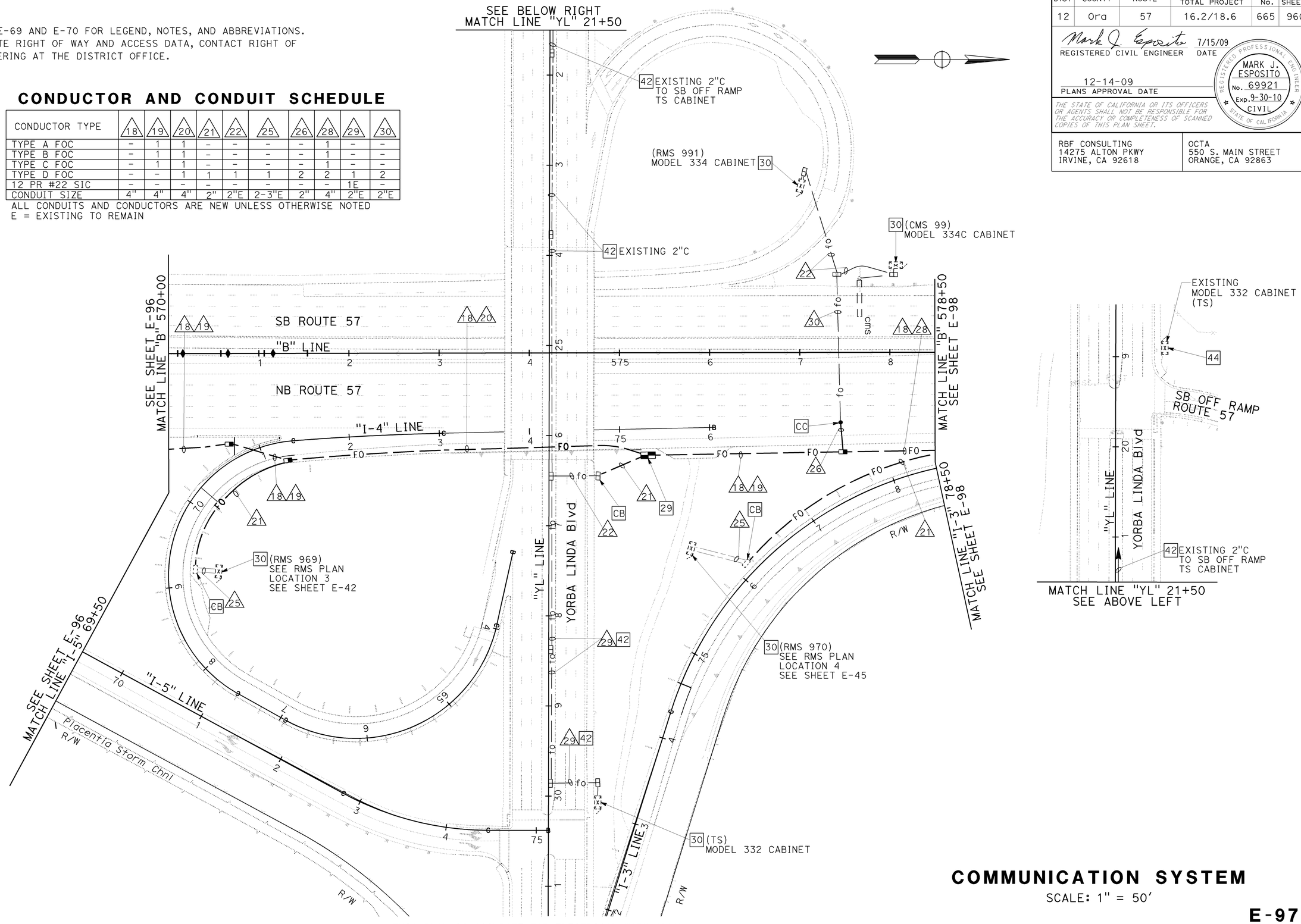

Dist	COUNTY	ROUTE	POST MILES TOTAL PROJECT	SHEET No.	TOTAL SHEETS
12	Ora	57	16.2/18.6	665	960

Mark J. Esposito 7/15/09
REGISTERED CIVIL ENGINEER DATE

12-14-09
PLANS APPROVAL DATE

REGISTERED PROFESSIONAL ENGINEER MARK J. ESPOSITO No. 69921 Exp. 9-30-10 CIVIL STATE OF CALIFORNIA

THE STATE OF CALIFORNIA OR ITS OFFICERS OR AGENTS SHALL NOT BE RESPONSIBLE FOR THE ACCURACY OR COMPLETENESS OF SCANNED COPIES OF THIS PLAN SHEET.

RBF CONSULTING
14275 ALTON PKWY
IRVINE, CA 92618

OCTA
550 S. MAIN STREET
ORANGE, CA 92863

COMMUNICATION SYSTEM

SCALE: 1" = 50'

E-97

THIS PLAN IS ACCURATE FOR ELECTRICAL WORK ONLY.

STATE OF CALIFORNIA - DEPARTMENT OF TRANSPORTATION
Caltrans
CONSULTANT FUNCTIONAL SUPERVISOR: CARLOS A. ORTIZ
CALCULATED-DESIGNED BY: JESSICA PARRENO
CHECKED BY: ARMANDO SOLIS
REVISED BY
DATE REVISED

H:\pdata\10105878\Admin\submittals\2009-06-29 FINAL Submittal\100% ELECTRONIC SUBMITTAL - MERGED1-DEC2009\12-28 Traffic\c0F031ua097.dgn

LAST REVISION 08-01-08
DATE PLOTTED => 21-DEC-2009
TIME PLOTTED => 12:28

BORDER LAST REVISED 4/11/2008
RELATIVE BORDER SCALE IS IN INCHES 0 1 2 3
USERNAME => trphils
DGN FILE => c0F031ua097.dgn
CU 12220
EA 0F0311

Dist	COUNTY	ROUTE	POST MILES TOTAL PROJECT	SHEET No.	TOTAL SHEETS
12	Ora	57	16.2/18.6	666	960

Mark J. Esposito 7/15/09
REGISTERED CIVIL ENGINEER DATE

12-14-09
PLANS APPROVAL DATE

REGISTERED PROFESSIONAL ENGINEER MARK J. ESPOSITO No. 69921 Exp. 9-30-10 CIVIL STATE OF CALIFORNIA

THE STATE OF CALIFORNIA OR ITS OFFICERS OR AGENTS SHALL NOT BE RESPONSIBLE FOR THE ACCURACY OR COMPLETENESS OF SCANNED COPIES OF THIS PLAN SHEET.

RBF CONSULTING
14275 ALTON PKWY
IRVINE, CA 92618

OCTA
550 S. MAIN STREET
ORANGE, CA 92863

NOTES:

1. SEE SHEET E-69 AND E-70 FOR LEGEND, NOTES, AND ABBREVIATIONS.
2. FOR ACCURATE RIGHT OF WAY DATA, CONTACT RIGHT OF WAY ENGINEERING AT THE DISTRICT OFFICE.

CONDUCTOR AND CONDUIT SCHEDULE

CONDUCTOR TYPE	18	21	28	31
TYPE A FOC	-	-	1	-
TYPE B FOC	-	-	1	-
TYPE C FOC	-	-	1	-
TYPE D FOC	-	1	2	-
CONDUIT SIZE	4"	2"	4"	4"

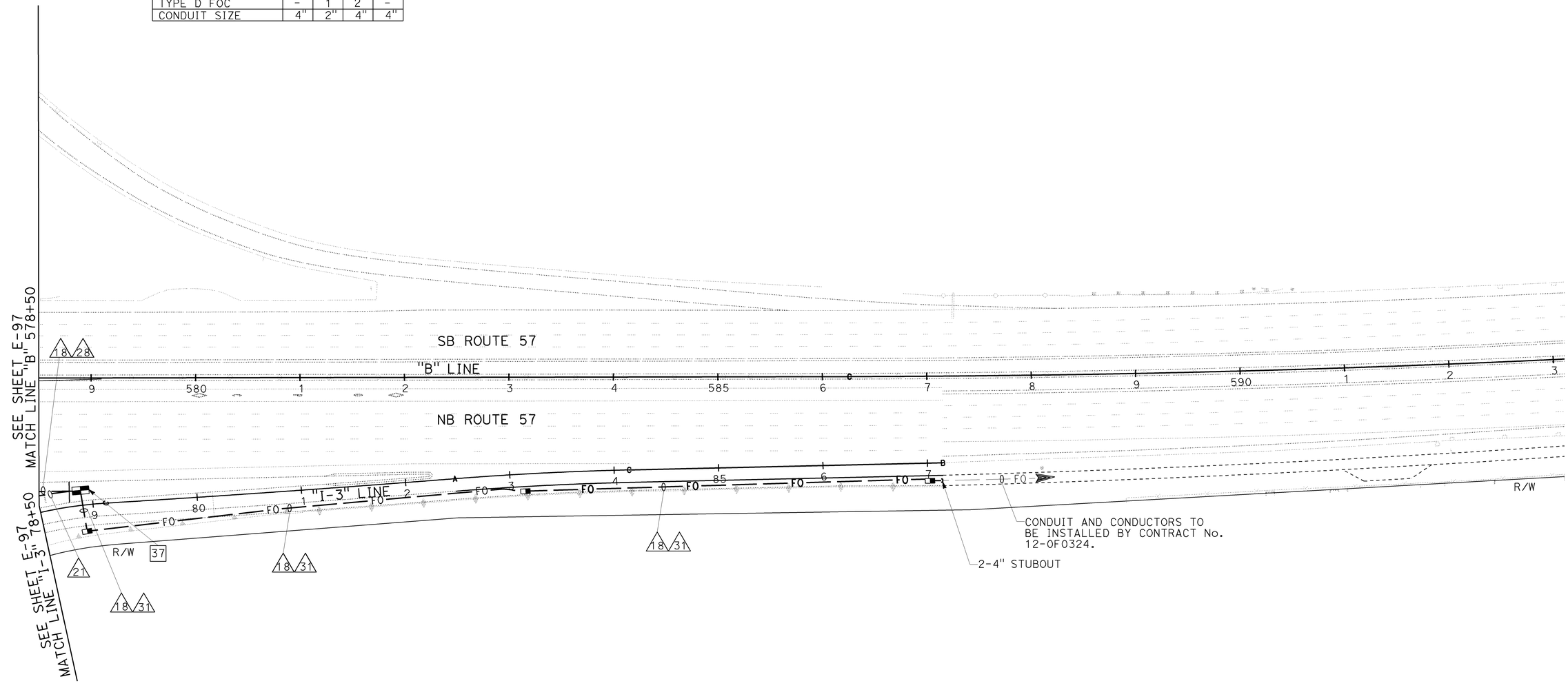

COMMUNICATION SYSTEM

SCALE: 1" = 50'

E-98

THIS PLAN IS ACCURATE FOR ELECTRICAL WORK ONLY.

STATE OF CALIFORNIA - DEPARTMENT OF TRANSPORTATION
Caltrans
CONSULTANT FUNCTIONAL SUPERVISOR: CARLOS A. ORTIZ
CALCULATED-DESIGNED BY: JESSICA PARRENO
CHECKED BY: ARMANDO SOLIS
REVISED BY
DATE REVISED

H:\pdata\10105878\Admin\submittals\2009-06-29 FINAL Submittal\100% ELECTRONIC SUBMITTAL - MERGED FILES\2009\01-01\traffic\c0F031ua098.dgn

LAST REVISION 08-01-08
DATE PLOTTED => 21-DEC-2009
TIME PLOTTED => 12:53

BORDER LAST REVISED 4/11/2008
RELATIVE BORDER SCALE IS IN INCHES 0 1 2 3
USERNAME => trmnguye
DGN FILE => c0F031ua098.dgn
CU 12220
EA 0F0311

NOTE:

1. FOR NOTES, LEGEND, AND ABBREVIATIONS, SEE SHEETS E-69 AND E-70.

Dist	COUNTY	ROUTE	POST MILES TOTAL PROJECT	SHEET No.	TOTAL SHEETS
12	Ora	57	16.2/18.6	667	960

Mark J. Esposito 7/15/09
REGISTERED CIVIL ENGINEER DATE

12-14-09
PLANS APPROVAL DATE

REGISTERED PROFESSIONAL ENGINEER MARK J. ESPOSITO No. 69921 Exp. 9-30-10 CIVIL STATE OF CALIFORNIA

THE STATE OF CALIFORNIA OR ITS OFFICERS OR AGENTS SHALL NOT BE RESPONSIBLE FOR THE ACCURACY OR COMPLETENESS OF SCANNED COPIES OF THIS PLAN SHEET.

RBF CONSULTING
14275 ALTON PKWY
IRVINE, CA 92618

OCTA
550 S. MAIN STREET
ORANGE, CA 92863

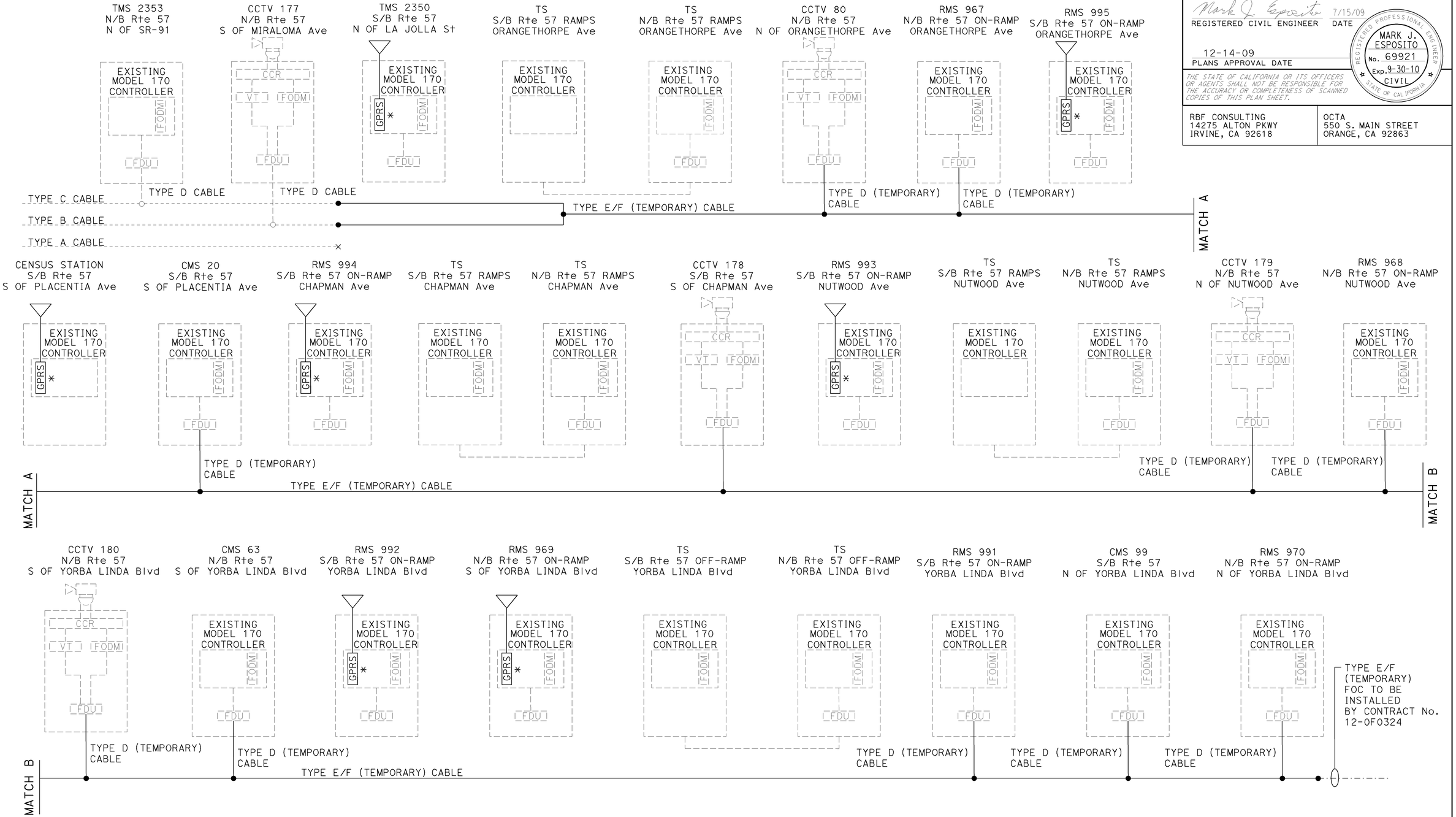

* TEMPORARY GPRS RADIO

TEMPORARY COMMUNICATION SYSTEM
(SR-57 FIELD ELEMENTS SCHEMATIC)

NO SCALE

E-99

THIS PLAN IS ACCURATE FOR ELECTRICAL WORK ONLY.

STATE OF CALIFORNIA - DEPARTMENT OF TRANSPORTATION
Caltrans

CONSULTANT FUNCTIONAL SUPERVISOR: CARLOS A. ORTIZ
CALCULATED-DESIGNED BY: JESSICA PARRENO
CHECKED BY: ARMANDO SOLIS
REVISED BY
DATE REVISED

H:\pdata\10105878\Admin\submittals\2009-06-29 FINAL Submittal\100% ELECTRONIC SUBMITTAL - MERGED FILES\2009\Traffic\c0F031ua099.dgn

LAST REVISION 08-01-08
DATE PLOTTED => 21-DEC-2009
TIME PLOTTED => 12:53

Dist	COUNTY	ROUTE	POST MILES TOTAL PROJECT	SHEET No.	TOTAL SHEETS
12	Ora	57	16.2/18.6	668	960

Mark J. Esposito 7/15/09
REGISTERED CIVIL ENGINEER DATE

12-14-09
PLANS APPROVAL DATE

REGISTERED PROFESSIONAL ENGINEER MARK J. ESPOSITO No. 69921 Exp. 9-30-10 CIVIL STATE OF CALIFORNIA

THE STATE OF CALIFORNIA OR ITS OFFICERS OR AGENTS SHALL NOT BE RESPONSIBLE FOR THE ACCURACY OR COMPLETENESS OF SCANNED COPIES OF THIS PLAN SHEET.

RBF CONSULTING
14275 ALTON PKWY
IRVINE, CA 92618

OCTA
550 S. MAIN STREET
ORANGE, CA 92863

NOTE:
1. FOR NOTES, LEGEND, AND ABBREVIATIONS, SEE SHEETS E-69 AND E-70.

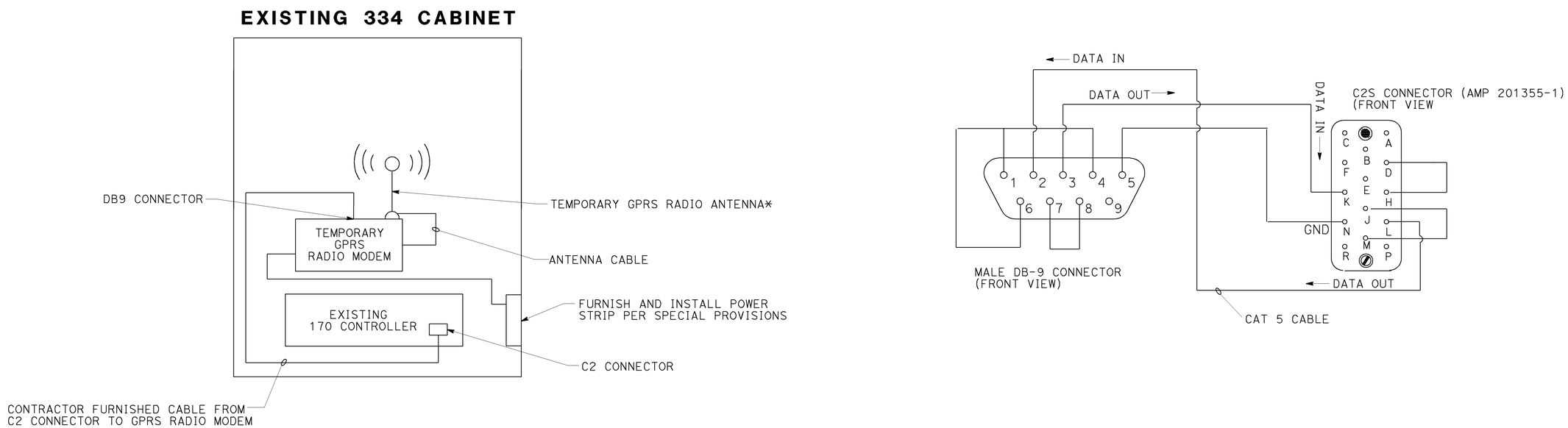

GPRS FIELD MODEM TO MODEL 170 CONNECTOR DETAIL

* MOUNTING OF TEMPORARY ANTENNA, INTERNAL OR EXTERNAL, TO CABINET SHALL BE DETERMIINED BASED ON MANUFACURER'S REQUIREMENTS AND A SIGNAL STRENGTH ANALYSIS CONDUCTED BY CONTRACTOR IN THE FIELD.

TEMPORARY COMMUNICATION SYSTEM
(GPRS MODEM DETAIL)
NO SCALE

E-100

THIS PLAN IS ACCURATE FOR ELECTRICAL WORK ONLY.

H:\pdata\10105878\Admin\submittals\2009-06-29 FINAL Submittal\100% ELECTRONIC SUBMITTAL - MERGED1-DEC2009\01-01-08 Traffic\c0F031ua100.dgn

STATE OF CALIFORNIA - DEPARTMENT OF TRANSPORTATION
Caltrans
CONSULTANT FUNCTIONAL SUPERVISOR: CARLOS A. ORTIZ
CALCULATED-DESIGNED BY: JESSICA PARRENO
CHECKED BY: ARMANDO SOLIS
REVISED BY
DATE REVISED

LAST REVISION 08-01-08
DATE PLOTTED => 21-DEC-2009
TIME PLOTTED => 12:53

NOTE:

1. FOR NOTES, LEGEND, AND ABBREVIATIONS, SEE SHEETS E-69 AND E-70.

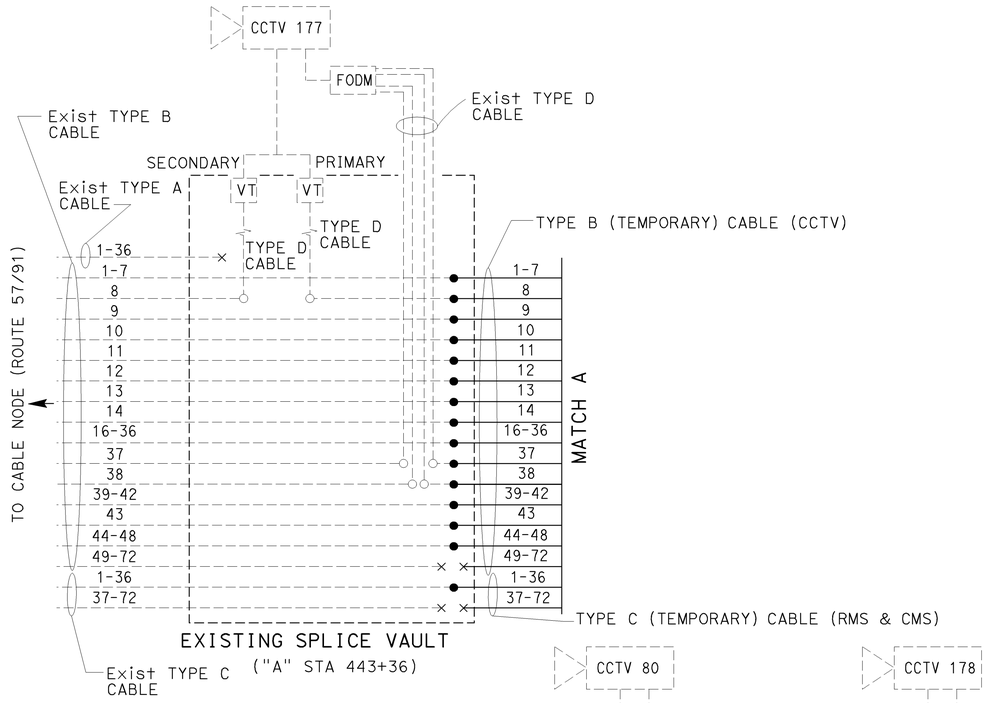

LEGEND:

FODM	- FIBER OPTIC DATA MODEM
VT	- VIDEO TRANSMITTER
AVS	- ACTIVE VIDEO SPLITTER
●	- PROPOSED (TEMPORARY) FO SPLICE
○	- Exist FO SPLICE
- - - - - -	- Exist CABLE(S)
———	- PROPOSED (TEMPORARY) CABLE(S)
·—·—·—	- PROPOSED (TEMPORARY) CABLE(S) BY CONTRACT EA 0F0324
×	- TERMINATED

Dist	COUNTY	ROUTE	POST MILES TOTAL PROJECT	SHEET No.	TOTAL SHEETS
12	Ora	57	16.2/18.6	669	960

Mark J. Esposito 7/15/09
REGISTERED CIVIL ENGINEER DATE

REGISTERED PROFESSIONAL ENGINEER
MARK J. ESPOSITO
No. 69921
Exp. 9-30-10
CIVIL
STATE OF CALIFORNIA

12-14-09
PLANS APPROVAL DATE

THE STATE OF CALIFORNIA OR ITS OFFICERS OR AGENTS SHALL NOT BE RESPONSIBLE FOR THE ACCURACY OR COMPLETENESS OF SCANNED COPIES OF THIS PLAN SHEET.

RBF CONSULTING
14275 ALTON PKWY
IRVINE, CA 92618

OCTA
550 S. MAIN STREET
ORANGE, CA 92863

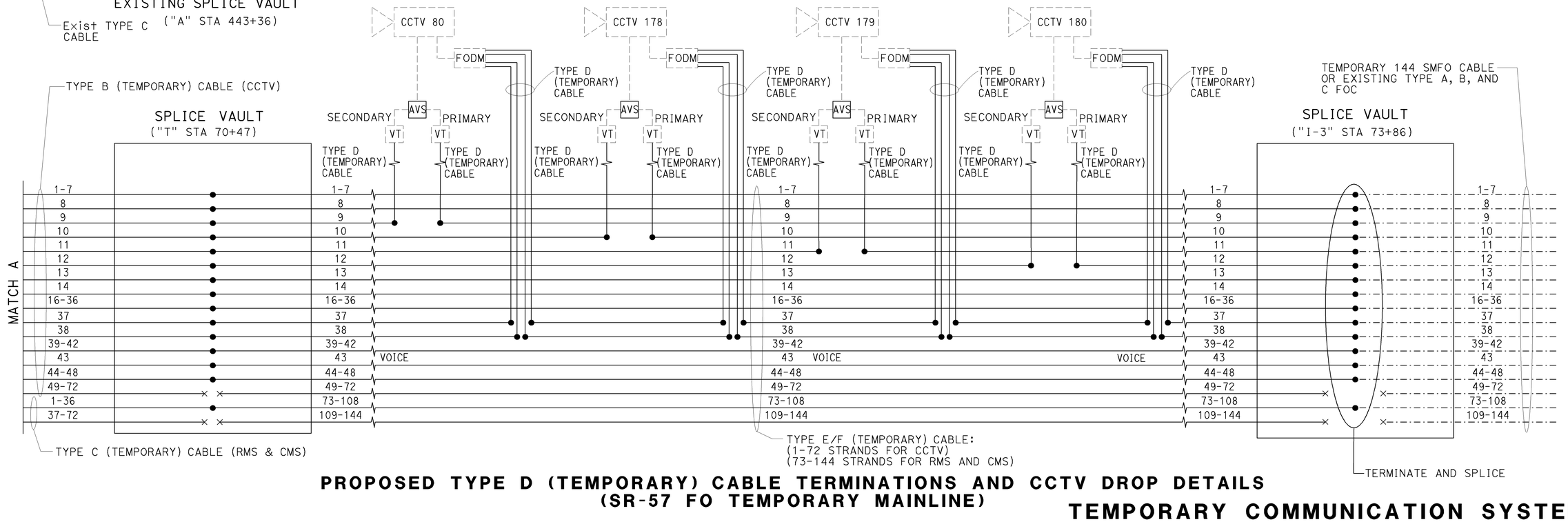

PROPOSED TYPE D (TEMPORARY) CABLE TERMINATIONS AND CCTV DROP DETAILS (SR-57 FO TEMPORARY MAINLINE)

TEMPORARY COMMUNICATION SYSTEM (TYPE D TERMINATIONS AND CCTV DROP AND REPLACEMENT DETAIL)

NO SCALE

THIS PLAN IS ACCURATE FOR ELECTRICAL WORK ONLY.

E-101

LAST REVISION DATE PLOTTED => 21-DEC-2009
08-01-08 TIME PLOTTED => 12:53

STATE OF CALIFORNIA - DEPARTMENT OF TRANSPORTATION
CONSULTANT FUNCTIONAL SUPERVISOR: CARLOS A. ORTIZ
CALCULATED-DESIGNED BY: JESSICA PARRENO
CHECKED BY: ARMANDO SOLIS
REVISED BY
DATE REVISED

H:\pdata\10105878\Admin\submittals\2009-06-29 FINAL Submittal\100% ELECTRONIC SUBMITTAL - MERGED\DESIGN\Traffic\c0F031ua101.dgn

BORDER LAST REVISED 4/11/2008 | RELATIVE BORDER SCALE IS IN INCHES 0 1 2 3 | USERNAME => trmnguye | DGN FILE => c0F031ua101.dgn | CU 12220 | EA 0F0311

NOTE:

1. FOR NOTES, LEGEND, AND ABBREVIATIONS, SEE SHEETS E-69 AND E-70.

LEGEND:

FODM	- FIBER OPTIC DATA MODEM
VT	- VIDEO TRANSMITTER
●	- PROPOSED (TEMPORARY) FO SPLICE
○	- Exist FO SPLICE
- - - - - - -	- Exist CABLE(S)
———	- PROPOSED (TEMPORARY) CABLE(S)
·-·-·-·-·-	- PROPOSED (TEMPORARY) CABLE(S) BY CONTRACT EA 0F0324
×	- TERMINATED

Dist	COUNTY	ROUTE	POST MILES TOTAL PROJECT	SHEET No.	TOTAL SHEETS
12	Ora	57	16.2/18.6	670	960

Mark J. Esposito 7/15/09
REGISTERED CIVIL ENGINEER DATE

12-14-09
PLANS APPROVAL DATE

MARK J. ESPOSITO No. 69921 Exp. 9-30-10 CIVIL — REGISTERED PROFESSIONAL ENGINEER — STATE OF CALIFORNIA

THE STATE OF CALIFORNIA OR ITS OFFICERS OR AGENTS SHALL NOT BE RESPONSIBLE FOR THE ACCURACY OR COMPLETENESS OF SCANNED COPIES OF THIS PLAN SHEET.

RBF CONSULTING
14275 ALTON PKWY
IRVINE, CA 92618

OCTA
550 S. MAIN STREET
ORANGE, CA 92863

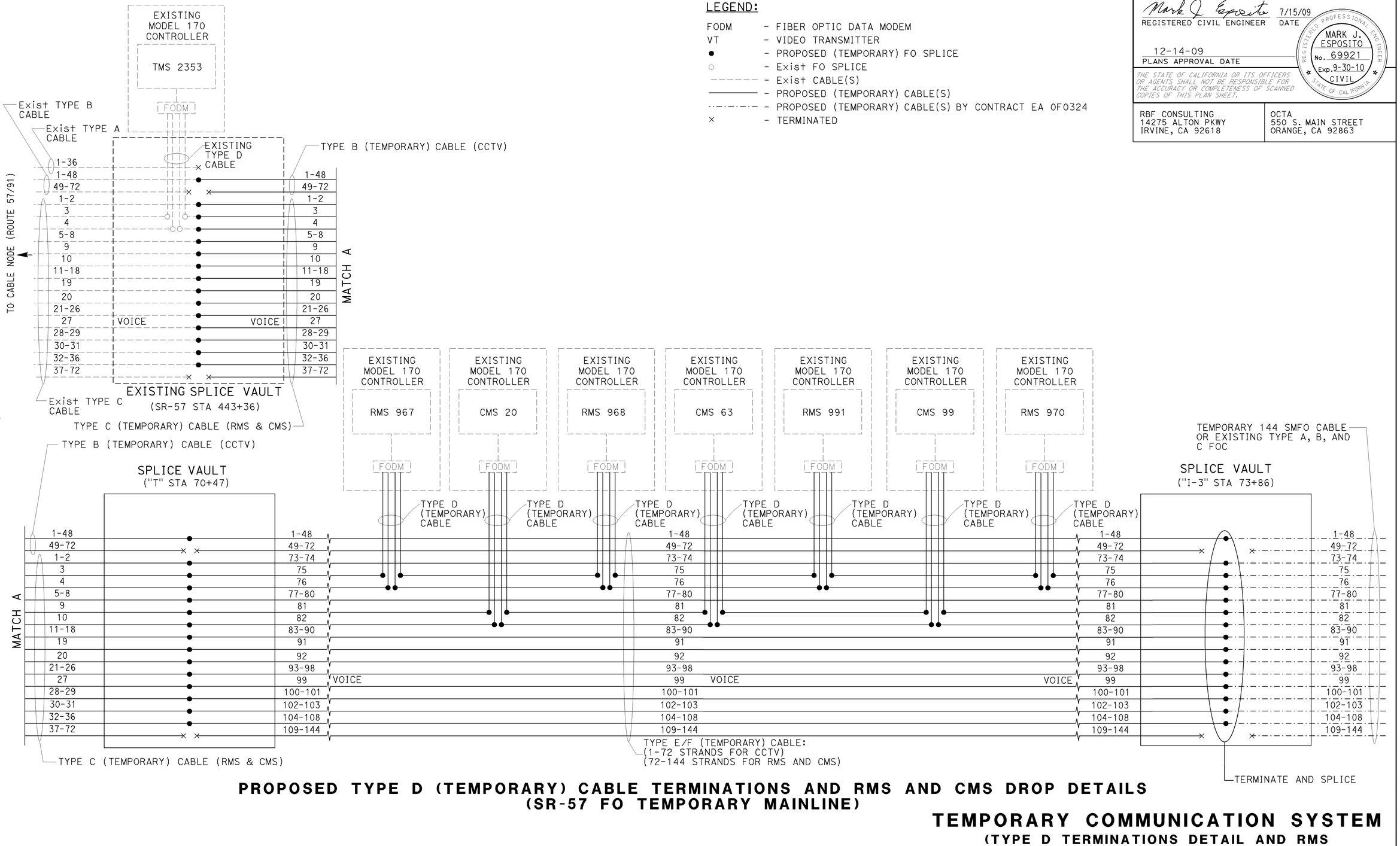

PROPOSED TYPE D (TEMPORARY) CABLE TERMINATIONS AND RMS AND CMS DROP DETAILS (SR-57 FO TEMPORARY MAINLINE)

TEMPORARY COMMUNICATION SYSTEM

(TYPE D TERMINATIONS DETAIL AND RMS AND CMS DROP AND REPLACEMENT DETAIL)

NO SCALE

THIS PLAN IS ACCURATE FOR ELECTRICAL WORK ONLY.

E-102

LAST REVISION DATE PLOTTED => 21-DEC-2009
TIME PLOTTED => 12:55
08-01-08

STATE OF CALIFORNIA - DEPARTMENT OF TRANSPORTATION
Caltrans
CONSULTANT FUNCTIONAL SUPERVISOR: CARLOS A. ORTIZ
CALCULATED-DESIGNED BY: JESSICA PARRENO
CHECKED BY: ARMANDO SOLIS
REVISED BY
DATE REVISED

H:\pdata\10105878\Admin\submittals\2009-07-15 FINAL Electronic-Only Submittal\DGN\rangu\ELOT File81 20090612 095031ua102.dgn

BORDER LAST REVISED 4/11/2008
RELATIVE BORDER SCALE IS IN INCHES 0 1 2 3
USERNAME => trmnguye
DGN FILE => c0F031ua102.dgn
CU 12220
EA 0F0311

Dist	COUNTY	ROUTE	POST MILES TOTAL PROJECT	SHEET No.	TOTAL SHEETS
12	Ora	57	16.2/18.6	671	960

Mark J. Esposito 7/15/09
REGISTERED CIVIL ENGINEER DATE

12-14-09
PLANS APPROVAL DATE

REGISTERED PROFESSIONAL ENGINEER
MARK J. ESPOSITO
No. 69921
Exp. 9-30-10
CIVIL
STATE OF CALIFORNIA

THE STATE OF CALIFORNIA OR ITS OFFICERS OR AGENTS SHALL NOT BE RESPONSIBLE FOR THE ACCURACY OR COMPLETENESS OF SCANNED COPIES OF THIS PLAN SHEET.

RBF CONSULTING
14275 ALTON PKWY
IRVINE, CA 92618

OCTA
550 S. MAIN STREET
ORANGE, CA 92863

EXISTING TYPE B AND TYPE C CABLES (SR-57 FO MAINLINE)

TYPE E/F (TEMPORARY) CABLE (SR-57 FO MAINLINE)

	FIBER No.	EXISTING CABLE NODE (ROUTE 57/91)	EXISTING TMS 2353	EXISTING CCTV 177	EXISTING SPLICE VAULT "A" STA 443+56	FIBER No.	FIBER No.	SPLICE VAULT "T" STA 70+47	CCTV 80	RMS 967	CMS 20	CCTV 178	CCTV 179	RMS 968	CCTV 180	CMS 63	RMS 991	CMS 99	RMS 970	SPLICE VAULT "1-3" STA 73+86	FIBER No.	REMARKS
TYPE B	1-7	<X>			<X>	1-7	1-7														1-7	
	8	<X>		<X>	<X>	8	8	<X>												<X>	8	
	9	<X>			<X>	9	9	<X>	<X>											<X>	9	VIDEO PRIMARY AND BACK-UP
	10	<X>			<X>	10	10	<X>				<X>								<X>	10	
	11	<X>			<X>	11	11	<X>					<X>							<X>	11	
	12	<X>			<X>	12	12	<X>							<X>					<X>	12	
	13-19	<X>			<X>	13-19	13-19	<X>												<X>	13-19	
	20-31	<X>			<X>	20-31	20-31	<X>												<X>	20-31	
	32-36					32-36	32-36														32-36	
	37-38	<X>		<X>	<X>	37-38	37-38	<X>	<X>			<X>	<X>		<X>					<X>	37-38	CCR
	39-42					39-42	39-42														39-42	
	43	<O>		<X>	<O>	43	43	<O>	<O>			<O>	<O>		<O>					<O>	43	VOICE
	44-72					44-72	44-72														44-72	
TYPE C	1-2	<X>			<X>	1-2	73-74	<X>												<X>	73-74	TMS
	3-4	<X>	<X>		<X>	3-4	75-76	<X>		<X>				<X>			<X>		<X>	<X>	75-76	TMS
	5-6					5-6	77-78														77-78	
	7-8					7-8	79-80														79-80	
	9-10	<X>			<X>	9-10	81-82	<X>			<X>					<X>		<X>		<X>	81-82	CMS
	11-12					11-12	83-84														83-84	
	13-18					13-18	85-90														85-90	
	19-20	<X>			<X>	19-20	91-92	<X>												<X>	91-92	TS
	21-26					21-26	93-98														93-98	
	27	<O>			<O>	27	99	<O>		<O>	<O>			<O>		<O>	<O>	<O>	<O>	<O>	99	VOICE
	28-29	<O>			<O>	28-29	100-101	<O>													100-101	
	30-31	<O>			<O>	30-31	102-103	<O>													102-103	
	32-72					32-72	104-144														104-144	

LEGEND:

X - TERMINATED ACTIVE
O - TERMINATED SPARE
< > - ARROW POINTS TO THE DIRECTION OF TRANSMISSION

NOTE:

1. FOR NOTES, LEGEND, AND ABBREVIATIONS, SEE SHEETS E-69 AND E-70.

TEMPORARY COMMUNICATION SYSTEM

(SR-57 TYPE E/F TEMPORARY CABLE FIBER ASSIGNMENTS)

NO SCALE

E-103

STATE OF CALIFORNIA - DEPARTMENT OF TRANSPORTATION
Caltrans
CONSULTANT FUNCTIONAL SUPERVISOR: CARLOS A. ORTIZ
CALCULATED-DESIGNED BY: JESSICA PARRENO
CHECKED BY: ARMANDO SOLIS
REVISED BY
DATE REVISED

H:\pdata\10105878\Admin\submittals\2009-07-15 FINAL Electronic-Only Submittal\DGN\rranguye\EL0T File21-2009-09:06:12 c0f0311ua103.dgn

LAST REVISION | DATE PLOTTED => 21-DEC-2009 | TIME PLOTTED => 12:54 | 08-01-08

BORDER LAST REVISED 4/11/2008 | RELATIVE BORDER SCALE IS IN INCHES 0 1 2 3 | USERNAME => trmnguye | DGN FILE => c0F031ua103.dgn | CU 12220 | EA 0F0311

NOTE:

1. FOR NOTES, LEGEND, AND ABBREVIATIONS, SEE SHEETS E-69 AND E-70.

Dist	COUNTY	ROUTE	POST MILES TOTAL PROJECT	SHEET No.	TOTAL SHEETS
12	Ora	57	16.2/18.6	672	960

Mark J. Esposito 7/15/09
REGISTERED CIVIL ENGINEER DATE

12-14-09
PLANS APPROVAL DATE

REGISTERED PROFESSIONAL ENGINEER
MARK J. ESPOSITO
No. 69921
Exp. 9-30-10
CIVIL
STATE OF CALIFORNIA

THE STATE OF CALIFORNIA OR ITS OFFICERS OR AGENTS SHALL NOT BE RESPONSIBLE FOR THE ACCURACY OR COMPLETENESS OF SCANNED COPIES OF THIS PLAN SHEET.

RBF CONSULTING
14275 ALTON PKWY
IRVINE, CA 92618

OCTA
550 S. MAIN STREET
ORANGE, CA 92863

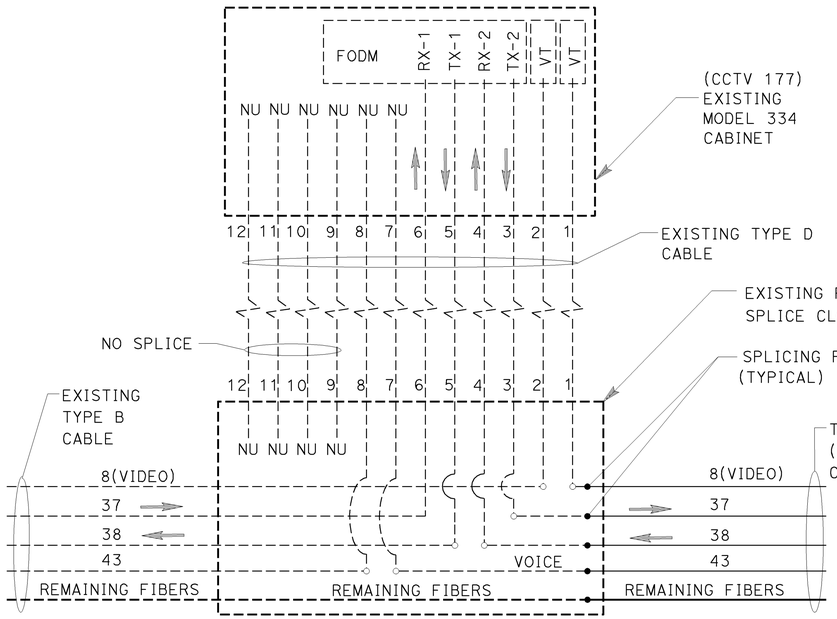

CONNECTION OF EXISTING TYPE D TO TYPE B (TEMPORARY) AT CCTV SITE AT EXISTING SPLICE VAULT ("A" STA 443+36)

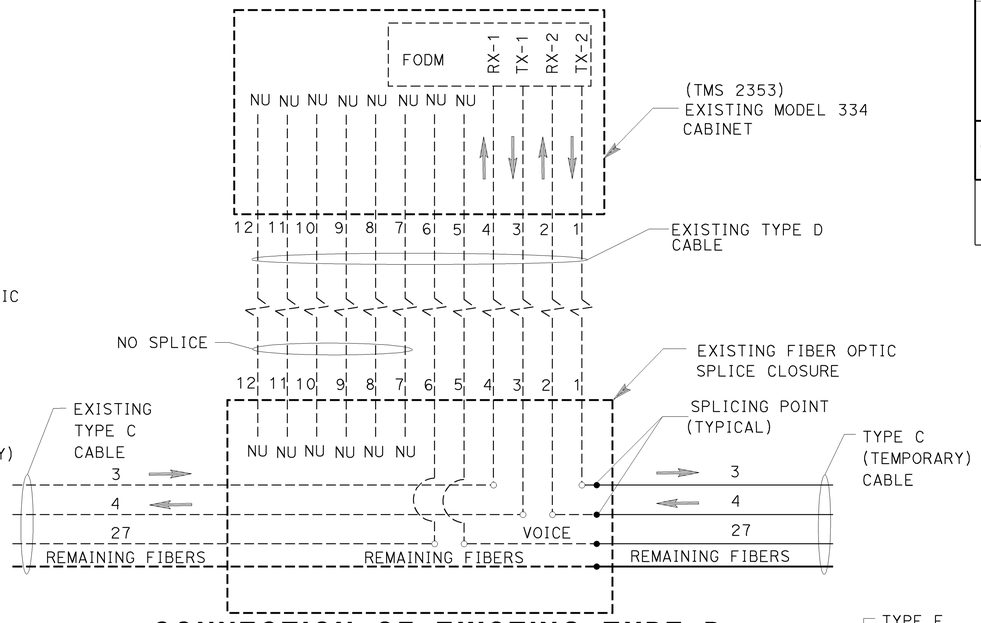

CONNECTION OF EXISTING TYPE D TO TYPE C (TEMPORARY) FOR TMS SITE AT EXISTING SPLICE VAULT ("A" STA 443+36)

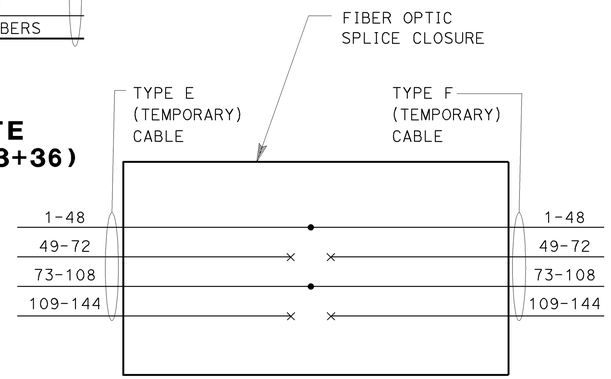

TYPICAL CONNECTION OF TYPE E (TEMPORARY) TO TYPE F (TEMPORARY) FO CABLES

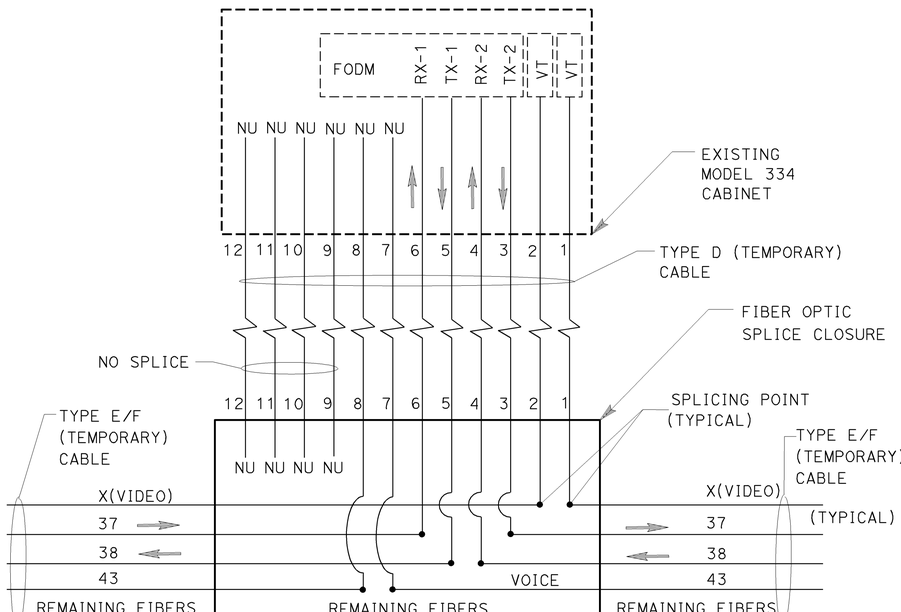

TYPICAL CONNECTION OF TYPE D TO TYPE E/F (TEMPORARY) AT CCTV SITE

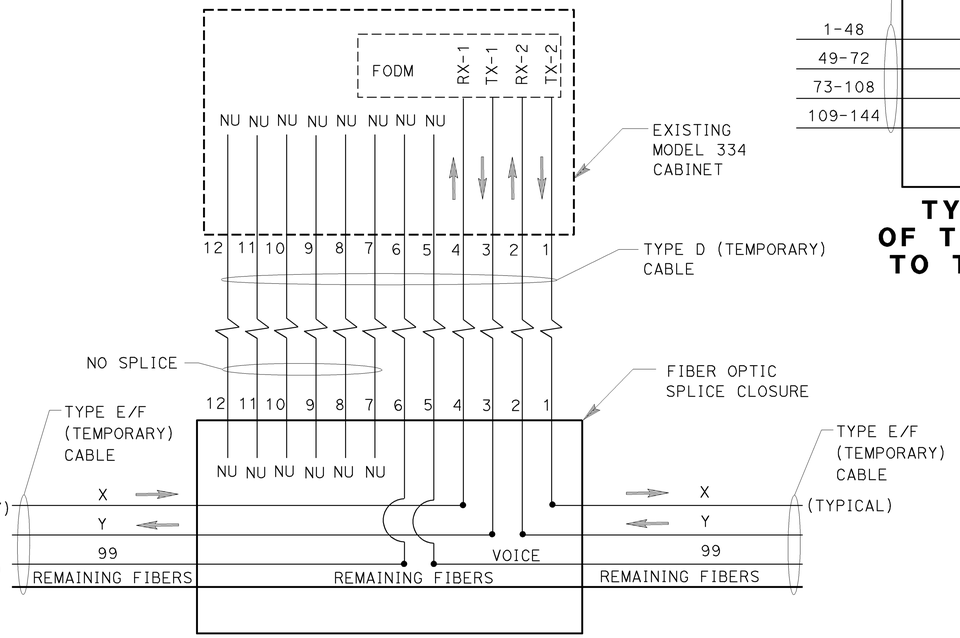

TYPICAL CONNECTION OF TYPE D TO TYPE E/F (TEMPORARY) FOR RMS AND CMS SITES

CIRCUIT	FIBER	
	X	Y
RMS	75	76
CMS	81	82

TEMPORARY COMMUNICATION SYSTEM (FIBER OPTIC SPLICING DETAILS TYPE D TEMPORARY AND TYPE E/F TEMPORARY)

NO SCALE

E-104

THIS PLAN IS ACCURATE FOR ELECTRICAL WORK ONLY.

STATE OF CALIFORNIA - DEPARTMENT OF TRANSPORTATION
Caltrans
CONSULTANT FUNCTIONAL SUPERVISOR: CARLOS A. ORTIZ
CALCULATED-DESIGNED BY: JESSICA PARRENO
CHECKED BY: ARMANDO SOLIS
REVISED BY
DATE REVISED

H:\pdata\1105878\Admin\submittals\2009-06-29 FINAL Submittal\100% ELECTRONIC SUBMITTAL - MERGED\FIBER\ITS\Traffic\c0F031ua104.dgn

LAST REVISION DATE PLOTTED => 21-DEC-2009
08-01-08 TIME PLOTTED => 12:54

BORDER LAST REVISED 4/11/2008
RELATIVE BORDER SCALE IS IN INCHES 0 1 2 3
USERNAME => trmnguye
DGN FILE => c0F031ua104.dgn
CU 12220
EA 0F0311

Dist	COUNTY	ROUTE	POST MILES TOTAL PROJECT	SHEET No.	TOTAL SHEETS
12	Ora	57	16.2/18.6	673	960

Mark J. Esposito 7/15/09
REGISTERED CIVIL ENGINEER DATE

12-14-09
PLANS APPROVAL DATE

REGISTERED PROFESSIONAL ENGINEER
MARK J. ESPOSITO
No. 69921
Exp. 9-30-10
CIVIL
STATE OF CALIFORNIA

THE STATE OF CALIFORNIA OR ITS OFFICERS OR AGENTS SHALL NOT BE RESPONSIBLE FOR THE ACCURACY OR COMPLETENESS OF SCANNED COPIES OF THIS PLAN SHEET.

RBF CONSULTING
14275 ALTON PKWY
IRVINE, CA 92618

OCTA
550 S. MAIN STREET
ORANGE, CA 92863

NOTE:
1. FOR NOTES, LEGEND, AND ABBREVIATIONS, SEE SHEETS E-69 AND E-70.

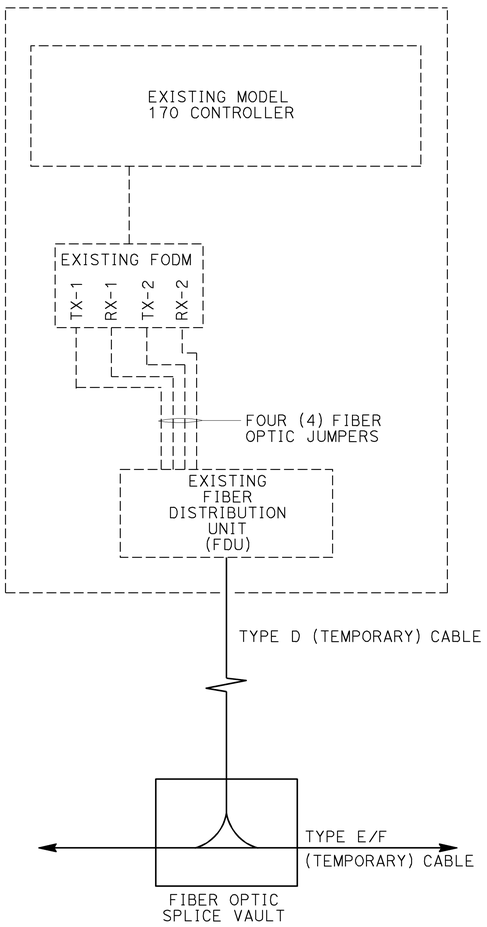

SCHEMATIC

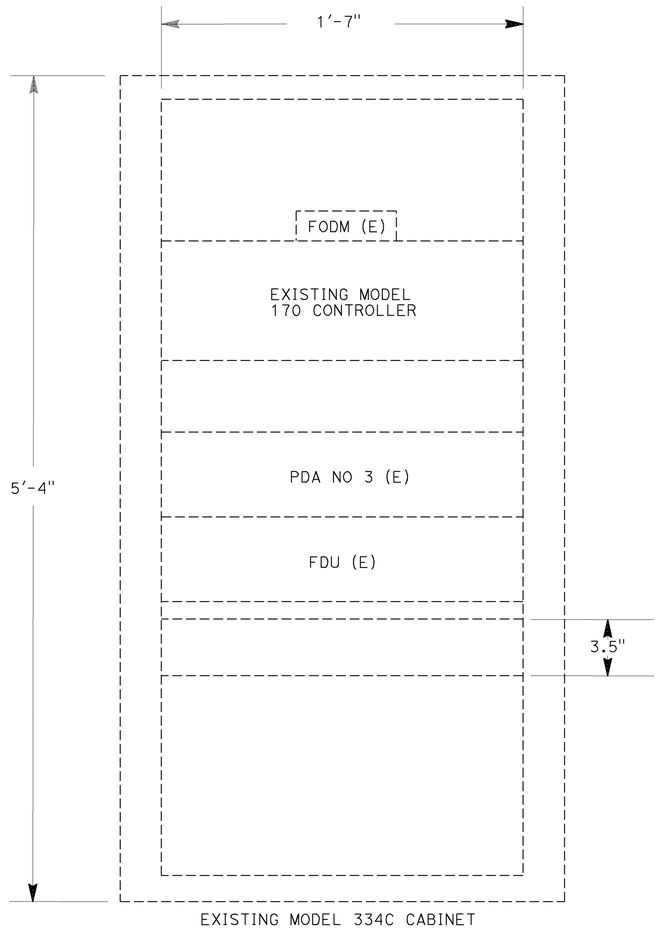

EQUIPMENT RACK LAYOUT

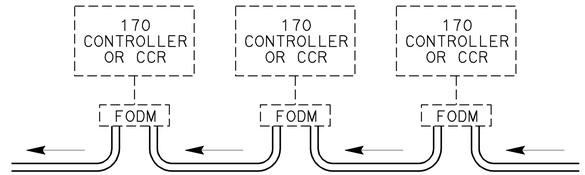

TYPICAL CONNECTION OF FIELD CONTROLLERS WITH SMFO

LEGEND(THIS SHEET):

TX-1 : TRANSMIT FIBER IN DIRECTION OF MASTER FODM
RX-1 : RECEIVE FIBER IN DIRECTION OF MASTER FODM
TX-2 : TRANSMIT FIBER IN OPPOSITE DIRECTION OF MASTER FODM
RX-2 : RECEIVE FIBER IN OPPOSITE DIRECTION OF MASTER FODM
(E): EXISTING

THIS PLAN IS ACCURATE FOR ELECTRICAL WORK ONLY.

TEMPORARY COMMUNICATION SYSTEM
(CONTROLLER INTERFACE)
NO SCALE

E-105

LAST REVISION DATE PLOTTED => 21-DEC-2009
TIME PLOTTED => 12:54
08-01-08

STATE OF CALIFORNIA - DEPARTMENT OF TRANSPORTATION
CONSULTANT FUNCTIONAL SUPERVISOR: CARLOS A. ORTIZ
CALCULATED-DESIGNED BY: JESSICA PARRENO
CHECKED BY: ARMANDO SOLIS
REVISED BY
DATE REVISED
Gutans

H:\pdata\10105878\Admin\submittals\2009-06-29 FINAL Submittal\100% ELECTRONIC SUBMITTAL\MERGED\FDEES2008BYATS\traffic\c0F031ua105.dgn

BORDER LAST REVISED 4/11/2008
RELATIVE BORDER SCALE IS IN INCHES 0 1 2 3
USERNAME => trmnguye
DGN FILE => c0F031ua105.dgn
CU 12220
EA 0F0311

NOTE:

1. FOR NOTES, LEGEND, AND ABBREVIATIONS, SEE SHEETS E-69 AND E-70.

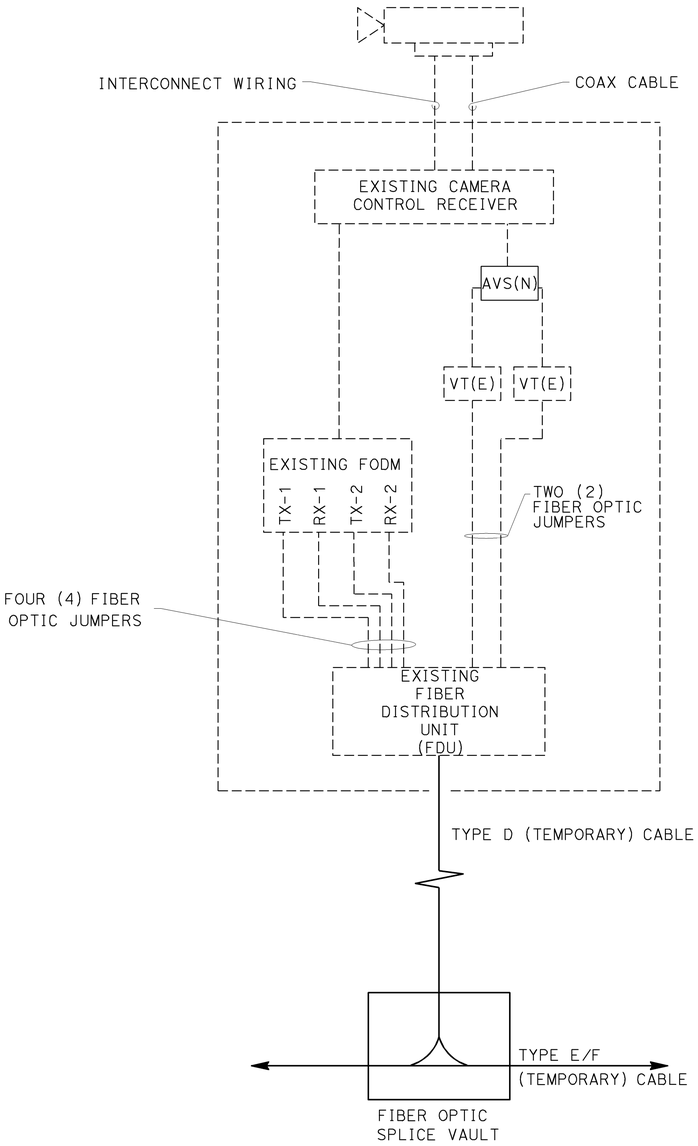

TYPICAL CCTV

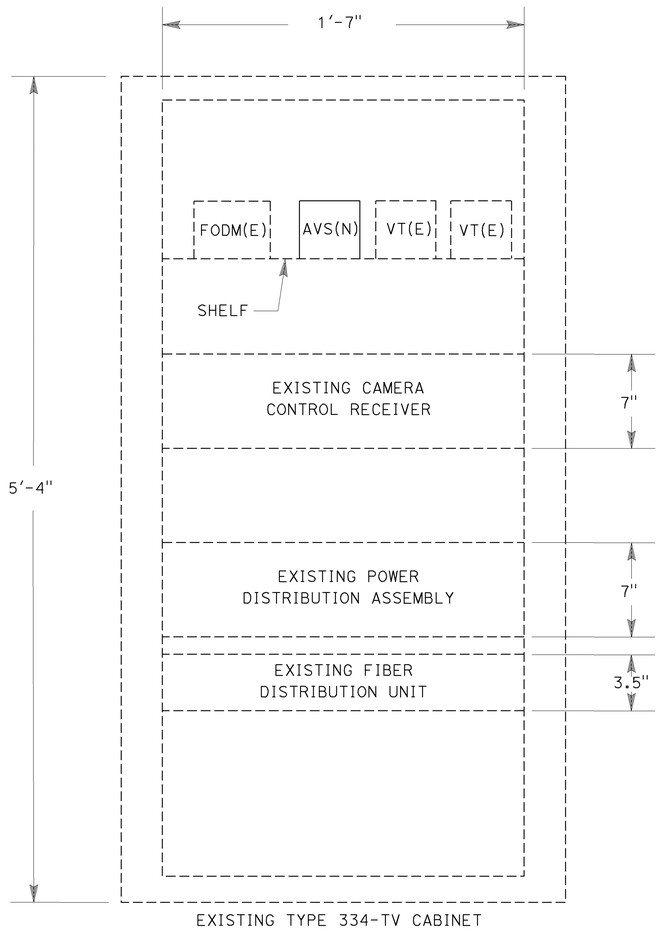

EXISTING EQUIPMENT RACK LAYOUT

LEGEND(THIS SHEET):

TX-1 : TRANSMIT FIBER IN DIRECTION OF MASTER FODM
RX-1 : RECEIVE FIBER IN DIRECTION OF MASTER FODM
TX-2 : TRANSMIT FIBER IN OPPOSITE DIRECTION OF MASTER FODM
RX-2 : RECEIVE FIBER IN OPPOSITE DIRECTION OF MASTER FODM
(E): EXISTING
(N): NEW

THIS PLAN IS ACCURATE FOR ELECTRICAL WORK ONLY.

TEMPORARY COMMUNICATION SYSTEM
(CCTV SITE)

NO SCALE

E-106

Dist	COUNTY	ROUTE	POST MILES TOTAL PROJECT	SHEET No.	TOTAL SHEETS
12	Ora	57	16.2/18.6	674	960

Mark J. Esposito 7/15/09
REGISTERED CIVIL ENGINEER DATE

MARK J. ESPOSITO No. 69921 Exp. 9-30-10 CIVIL — REGISTERED PROFESSIONAL ENGINEER — STATE OF CALIFORNIA

12-14-09
PLANS APPROVAL DATE

THE STATE OF CALIFORNIA OR ITS OFFICERS OR AGENTS SHALL NOT BE RESPONSIBLE FOR THE ACCURACY OR COMPLETENESS OF SCANNED COPIES OF THIS PLAN SHEET.

RBF CONSULTING
14275 ALTON PKWY
IRVINE, CA 92618

OCTA
550 S. MAIN STREET
ORANGE, CA 92863

STATE OF CALIFORNIA - DEPARTMENT OF TRANSPORTATION
CONSULTANT FUNCTIONAL SUPERVISOR: CARLOS A. ORTIZ
CALCULATED-DESIGNED BY: JESSICA PARRENO
CHECKED BY: ARMANDO SOLIS
REVISED BY
DATE REVISED

H:\pdata\10105878\Admin\submittals\2009-06-29 FINAL Submittal\100% ELECTRONIC SUBMITTAL - MERGED\DGN\c0F031ua106.dgn
USERNAME => trcarol
DGN FILE => c0F031ua106.dgn

LAST REVISION DATE PLOTTED => 21-DEC-2009
TIME PLOTTED => 12:38

BORDER LAST REVISED 4/11/2008
RELATIVE BORDER SCALE IS IN INCHES 0 1 2 3
CU 12220
EA 0F0311

Dist	COUNTY	ROUTE	POST MILES TOTAL PROJECT	SHEET No.	TOTAL SHEETS
12	Ora	57	16.2/18.6	675	960

Mark J. Esposito 7/15/09
REGISTERED CIVIL ENGINEER DATE

12-14-09
PLANS APPROVAL DATE

REGISTERED PROFESSIONAL ENGINEER
MARK J. ESPOSITO
No. 69921
Exp. 9-30-10
CIVIL
STATE OF CALIFORNIA

THE STATE OF CALIFORNIA OR ITS OFFICERS OR AGENTS SHALL NOT BE RESPONSIBLE FOR THE ACCURACY OR COMPLETENESS OF SCANNED COPIES OF THIS PLAN SHEET.

RBF CONSULTING
14275 ALTON PKWY
IRVINE, CA 92618

OCTA
550 S. MAIN STREET
ORANGE, CA 92863

NOTE:

1. FOR NOTES, LEGEND, AND ABBREVIATIONS, SEE SHEETS E-69 AND E-70.

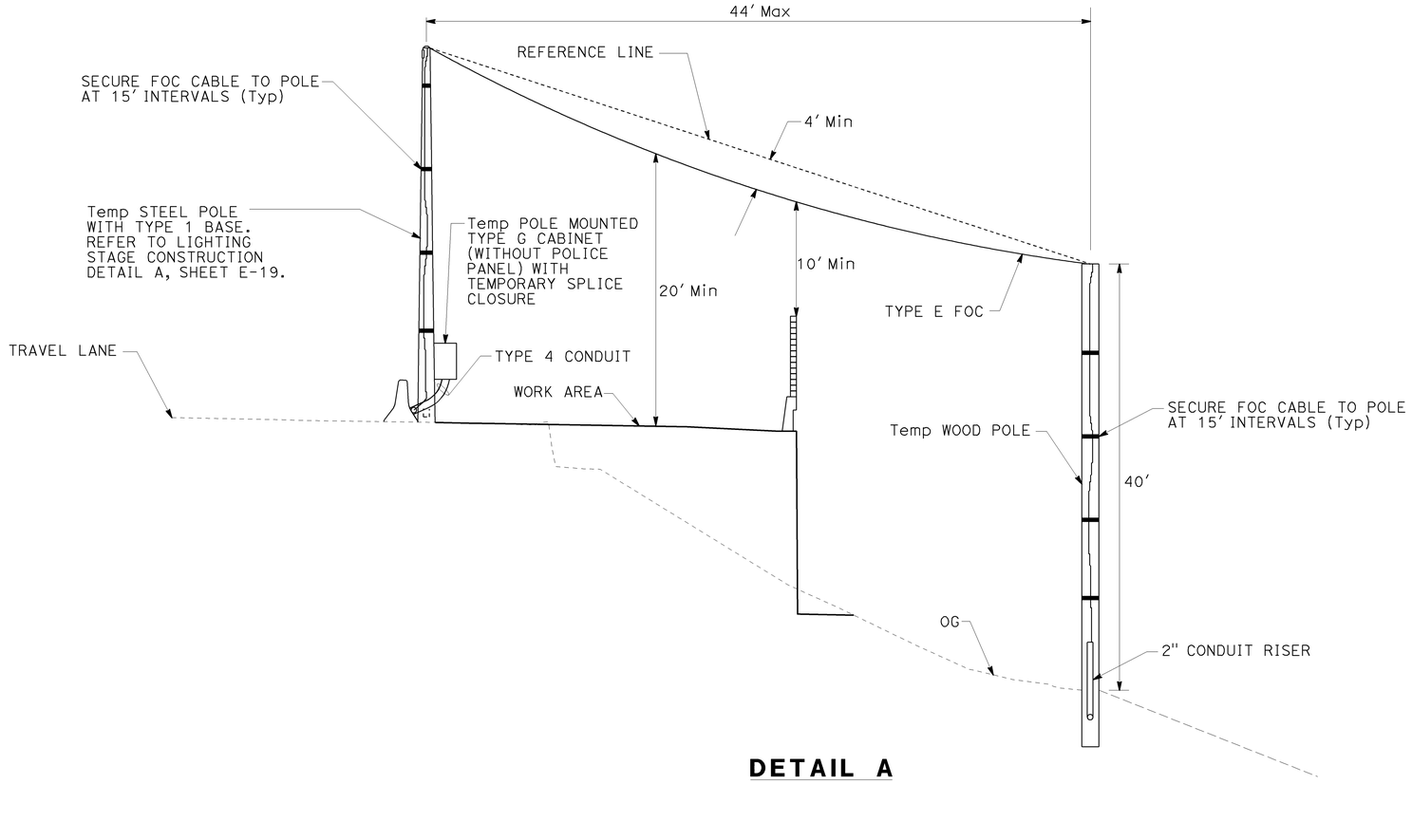

DETAIL A

THIS PLAN IS ACCURATE FOR ELECTRICAL WORK ONLY.

TEMPORARY COMMUNICATION SYSTEM (DETAIL)

NO SCALE

E-107

LAST REVISION DATE PLOTTED => 21-DEC-2009
08-01-08 TIME PLOTTED => 12:38

H:\pdata\10105878\Admin\submittals\2009-06-29 FINAL Submittal\100% ELECTRONIC SUBMITTAL - MERGED FILES 2009\traffic\c0F031ua107.dgn

STATE OF CALIFORNIA - DEPARTMENT OF TRANSPORTATION
Caltrans

CONSULTANT FUNCTIONAL SUPERVISOR: CARLOS A. ORTIZ
CALCULATED-DESIGNED BY: JESSICA PARRENO
CHECKED BY: ARMANDO SOLIS
REVISED BY
DATE REVISED

BORDER LAST REVISED 4/11/2008

RELATIVE BORDER SCALE IS IN INCHES 0 1 2 3

USERNAME => trcarol
DGN FILE => c0F031ua107.dgn

CU 12220

EA 0F0311

NOTE:

1. FOR NOTES, LEGEND, AND ABBREVIATIONS, SEE SHEETS E-69 AND E-70.

Dist	COUNTY	ROUTE	POST MILES TOTAL PROJECT	SHEET No.	TOTAL SHEETS
12	Ora	57	16.2/18.6	676	960

Mark J. Esposito 7/15/09
REGISTERED CIVIL ENGINEER DATE

MARK J. ESPOSITO No. 69921 Exp. 9-30-10 CIVIL — REGISTERED PROFESSIONAL ENGINEER — STATE OF CALIFORNIA

12-14-09
PLANS APPROVAL DATE

THE STATE OF CALIFORNIA OR ITS OFFICERS OR AGENTS SHALL NOT BE RESPONSIBLE FOR THE ACCURACY OR COMPLETENESS OF SCANNED COPIES OF THIS PLAN SHEET.

RBF CONSULTING
14275 ALTON PKWY
IRVINE, CA 92618

OCTA
550 S. MAIN STREET
ORANGE, CA 92863

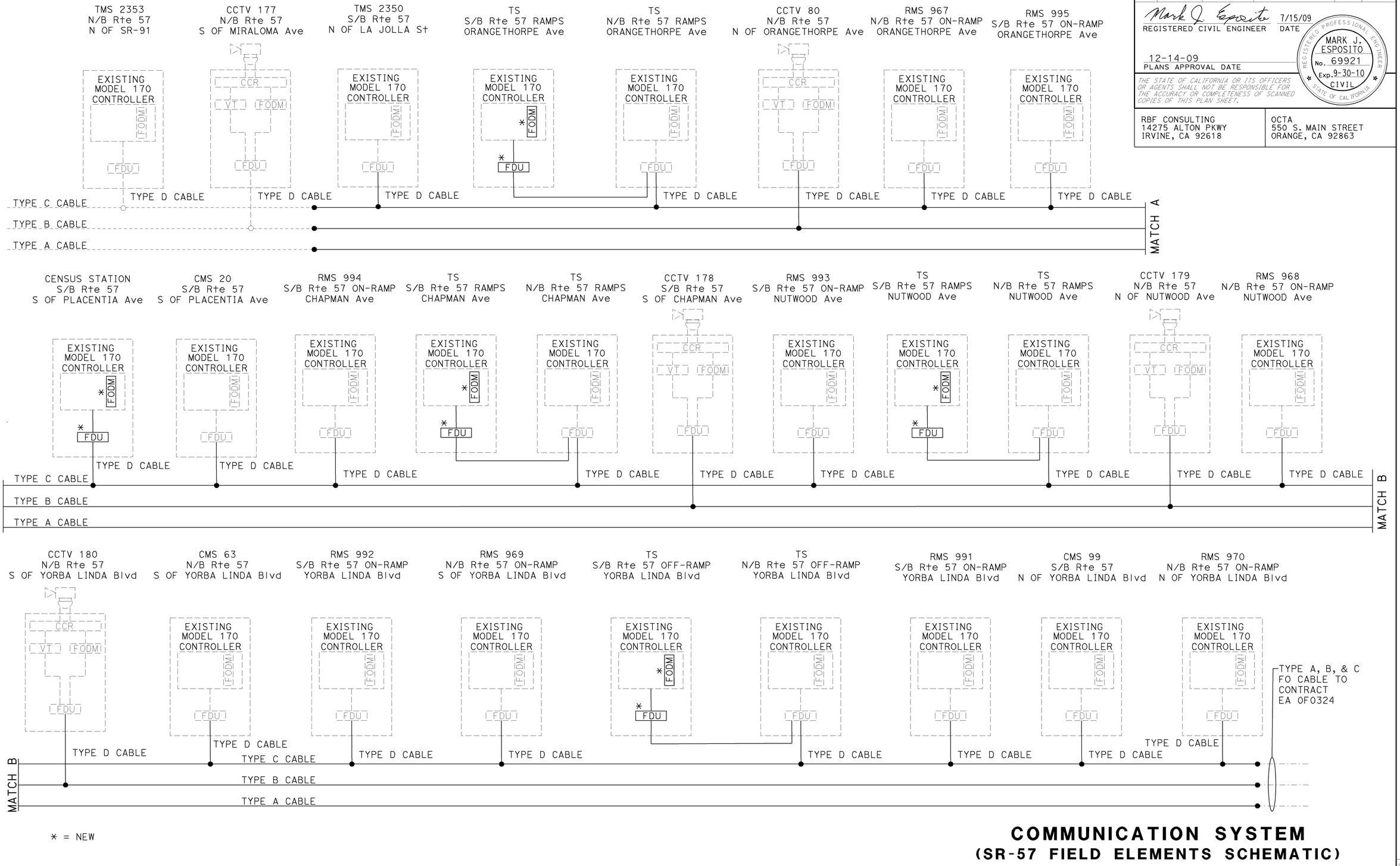

COMMUNICATION SYSTEM
(SR-57 FIELD ELEMENTS SCHEMATIC)

NO SCALE

E-108

THIS PLAN IS ACCURATE FOR ELECTRICAL WORK ONLY.

LAST REVISION DATE PLOTTED => 21-DEC-2009
08-01-08 TIME PLOTTED => 12:38

STATE OF CALIFORNIA - DEPARTMENT OF TRANSPORTATION
Caltrans
CONSULTANT FUNCTIONAL SUPERVISOR: CARLOS A. ORTIZ
CALCULATED-DESIGNED BY: JESSICA PARRENO
CHECKED BY: ARMANDO SOLIS
REVISED BY | DATE REVISED

H:\pdata\10105878\Admin\submittals\2009-06-29 FINAL Submittal\100% ELECTRONIC SUBMITTAL - MERGED\DGN\c0F031ua108.dgn

BORDER LAST REVISED 4/11/2008 | RELATIVE BORDER SCALE IS IN INCHES 0 1 2 3 | USERNAME => trcarol | DGN FILE => c0F031ua108.dgn | CU 12220 | EA 0F0311

Dist	COUNTY	ROUTE	POST MILES TOTAL PROJECT	SHEET No.	TOTAL SHEETS
12	Ora	57	16.2/18.6	677	960

Mark J. Esposito 7/15/09
REGISTERED CIVIL ENGINEER DATE

12-14-09
PLANS APPROVAL DATE

REGISTERED PROFESSIONAL ENGINEER MARK J. ESPOSITO No. 69921 Exp. 9-30-10 CIVIL STATE OF CALIFORNIA

THE STATE OF CALIFORNIA OR ITS OFFICERS OR AGENTS SHALL NOT BE RESPONSIBLE FOR THE ACCURACY OR COMPLETENESS OF SCANNED COPIES OF THIS PLAN SHEET.

RBF CONSULTING
14275 ALTON PKWY
IRVINE, CA 92618

OCTA
550 S. MAIN STREET
ORANGE, CA 92863

NOTE:

1. FOR NOTES, LEGEND, AND ABBREVIATIONS, SEE SHEETS E-69 AND E-70.

LEGEND:

FODM - FIBER OPTIC DATA MODEM
VT - VIDEO TRANSMITTER
AVS - ACTIVE VIDEO SPLITTER
● - PROPOSED FO SPLICE
○ - Exist FO SPLICE
- - - - - - Exist CABLE(S)
——— - PROPOSED CABLE(S)
-·-·-·- - PROPOSED CABLE(S) BY CONTRACT EA 0F0324
× - TERMINATED

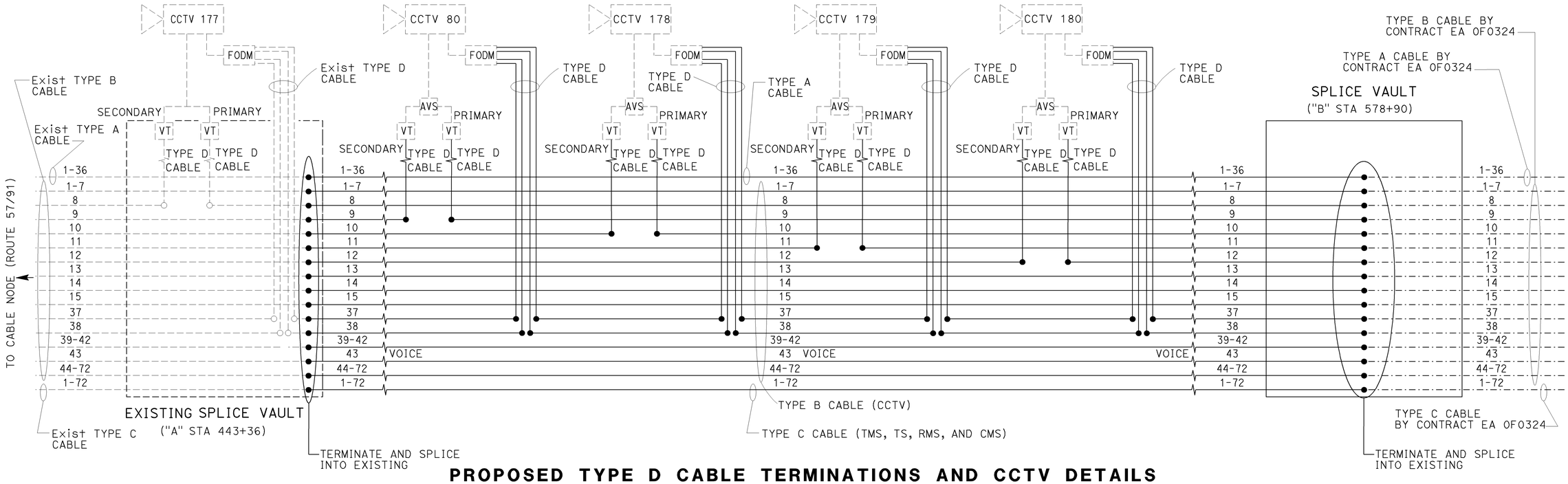

PROPOSED TYPE D CABLE TERMINATIONS AND CCTV DETAILS (SR-57 FO MAINLINE)

COMMUNICATION SYSTEM
(TYPE D TERMINATIONS AND CCTV DROP AND REPLACEMENT DETAIL)

NO SCALE

E-109

THIS PLAN IS ACCURATE FOR ELECTRICAL WORK ONLY.

STATE OF CALIFORNIA - DEPARTMENT OF TRANSPORTATION
Caltrans
CONSULTANT FUNCTIONAL SUPERVISOR: CARLOS A. ORTIZ
CALCULATED-DESIGNED BY: JESSICA PARRENO
CHECKED BY: ARMANDO SOLIS
REVISED BY
DATE REVISED

H:\pdata\10105878\Admin\submittals\2009-06-29 FINAL Submittal\100% ELECTRONIC SUBMITTAL - MERGED FILES2009\01-08 Traffic\c0F031ua109.dgn

LAST REVISION 08-01-08
DATE PLOTTED => 21-DEC-2009
TIME PLOTTED => 12:38

BORDER LAST REVISED 4/11/2008
RELATIVE BORDER SCALE IS IN INCHES 0 1 2 3
USERNAME => trcarol
DGN FILE => c0F031ua109.dgn
CU 12220
EA 0F0311

Dist	COUNTY	ROUTE	POST MILES TOTAL PROJECT	SHEET No.	TOTAL SHEETS
12	Ora	57	16.2/18.6	678	960

Mark J. Esposito 7/15/09
REGISTERED CIVIL ENGINEER DATE

12-14-09
PLANS APPROVAL DATE

REGISTERED PROFESSIONAL ENGINEER MARK J. ESPOSITO No. 69921 Exp. 9-30-10 CIVIL STATE OF CALIFORNIA

THE STATE OF CALIFORNIA OR ITS OFFICERS OR AGENTS SHALL NOT BE RESPONSIBLE FOR THE ACCURACY OR COMPLETENESS OF SCANNED COPIES OF THIS PLAN SHEET.

RBF CONSULTING
14275 ALTON PKWY
IRVINE, CA 92618

OCTA
550 S. MAIN STREET
ORANGE, CA 92863

NOTE:

1. FOR NOTES, LEGEND, AND ABBREVIATIONS, SEE SHEETS E-69 AND E-70.

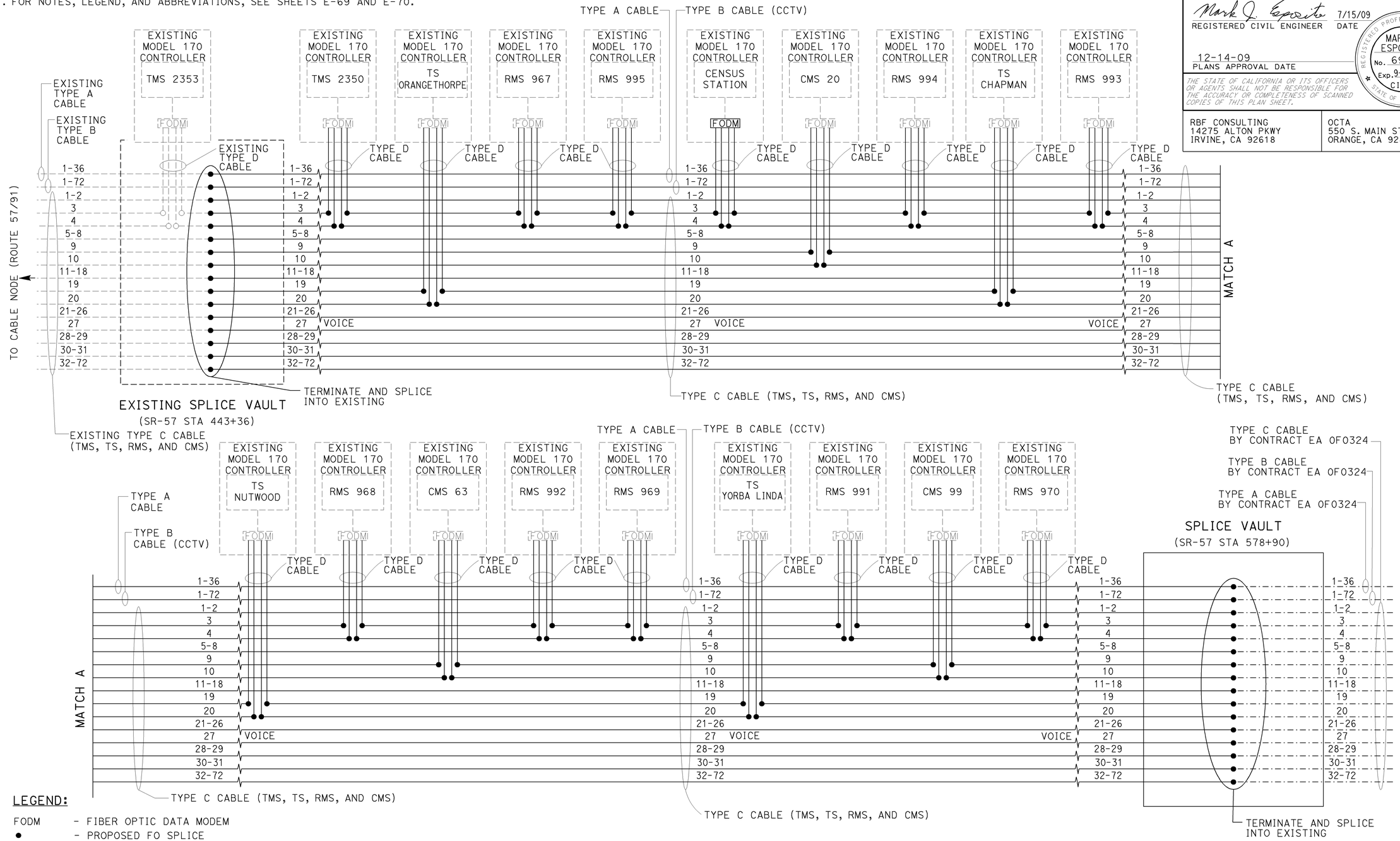

LEGEND:

FODM - FIBER OPTIC DATA MODEM
● - PROPOSED FO SPLICE
○ - Exist FO SPLICE
- - - - - - - Exist CABLE(S)
———— - PROPOSED CABLE(S)
-·-·-·- - PROPOSED CABLE(S) BY CONTRACT EA 0F0324
× - TERMINATED

PROPOSED TYPE C CABLE TERMINATIONS AND CCTV DETAILS (SR-57 FO MAINLINE)

COMMUNICATION SYSTEM (TYPE C TERMINATIONS DETAIL)

NO SCALE

THIS PLAN IS ACCURATE FOR ELECTRICAL WORK ONLY.

E-110

STATE OF CALIFORNIA - DEPARTMENT OF TRANSPORTATION
Caltrans
CONSULTANT FUNCTIONAL SUPERVISOR: CARLOS A. ORTIZ
CALCULATED-DESIGNED BY: JESSICA PARRENO
CHECKED BY: ARMANDO SOLIS
REVISED BY
DATE REVISED

H:\pdata\10105878\Admin\submittals\2009-06-29 FINAL Submittal\100% ELECTRONIC SUBMITTAL - MERGED FILES\2009\12-18\traffic\c0F031ua110.dgn

LAST REVISION 08-01-08
DATE PLOTTED => 21-DEC-2009
TIME PLOTTED => 12:38

Dist	COUNTY	ROUTE	POST MILES TOTAL PROJECT	SHEET No.	TOTAL SHEETS
12	Ora	57	16.2/18.6	679	960

Mark J. Esposito 7/15/09
REGISTERED CIVIL ENGINEER DATE

12-14-09
PLANS APPROVAL DATE

REGISTERED PROFESSIONAL ENGINEER MARK J. ESPOSITO No. 69921 Exp. 9-30-10 CIVIL STATE OF CALIFORNIA

THE STATE OF CALIFORNIA OR ITS OFFICERS OR AGENTS SHALL NOT BE RESPONSIBLE FOR THE ACCURACY OR COMPLETENESS OF SCANNED COPIES OF THIS PLAN SHEET.

RBF CONSULTING
14275 ALTON PKWY
IRVINE, CA 92618

OCTA
550 S. MAIN STREET
ORANGE, CA 92863

NOTE:

1. FOR NOTES, LEGEND, AND ABBREVIATIONS, SEE SHEETS E-69 AND E-70.

TYPE B CABLE (SR-57 FO MAINLINE)

FIBER No.	EXISTING CABLE NODE (SR-57/SR-91)	CCTV 177	FIBER No.	EXISTING SLICE VAULT "A" STA 443+36	CCTV 80	CCTV 178	CCTV 179	CCTV 180	SPLICE VAULT "B" STA 578+90	FIBER No.	REMARKS
1-7	<X		1-7							1-7	
8	X>	<X>	8	<X>					<X>	8	
9	X>		9	<X>	<X>				<X>	9	
10	X>		10	<X>		<X>			<X>	10	
11	X>		11	<X>			<X>		<X>	11	
12	X>		12	<X>				<X>	<X>	12	
13	X>		13	<X>					<X>	13	VIDEO (PRIMARY AND BACKUP)
14	X>		14	<X>					<X>	14	
15	X>		15	<X>					<X>	15	
16	X>		16	<X>					<X>	16	
17	X>		17	<X>					<X>	17	
18	X>		18	<X>					<X>	18	
19	X>		19	<X>					<X>	19	
20-31	X>		20-31	<X>					<X>	20-31	LOOP BACK TO FIBERS 8-19 BACK UP VIDEO TO HUB 2
26-36			26-36							26-36	CCTV - FUTURE
37-38	<X>	<X>	37-38	<X>	<X>	<X>	<X>	<X>	<X>	37-38	CCR 11
39-40			39-40							39-40	CCR 11 TO DN 10
41-42			41-42							41-42	CCR - FUTURE
43	<O>	<O>	43	<O>	<O>	<O>	<O>	<O>	<O>	43	VOICE
44-72			44-72							44-72	FUTURE

LEGEND:

X - TERMINATED ACTIVE
O - TERMINATED SPARE
< > - ARROW POINTS TO THE DIRECTION OF TRANSMISSION

COMMUNICATION SYSTEM
(TYPE B CABLE FIBER ASSIGNMENT TABLE)

NO SCALE

THIS PLAN IS ACCURATE FOR ELECTRICAL WORK ONLY.

E-111

STATE OF CALIFORNIA - DEPARTMENT OF TRANSPORTATION
Caltrans
CONSULTANT FUNCTIONAL SUPERVISOR: CARLOS A. ORTIZ
CALCULATED-DESIGNED BY: JESSICA PARRENO
CHECKED BY: ARMANDO SOLIS
REVISED BY
DATE REVISED

H:\pdata\10105878\Admin\submittals\2009-06-29 FINAL Submittal\100% ELECTRONIC SUBMITTAL - MERGED FILES2009\01-Traffic\c0F031ua111.dgn

LAST REVISION 08-01-08
DATE PLOTTED => 21-DEC-2009
TIME PLOTTED => 12:38

Dist	COUNTY	ROUTE	POST MILES TOTAL PROJECT	SHEET No.	TOTAL SHEETS
12	Ora	57	16.2/18.6	680	960

Mark J. Esposito 7/15/09
REGISTERED CIVIL ENGINEER DATE

12-14-09
PLANS APPROVAL DATE

REGISTERED PROFESSIONAL ENGINEER MARK J. ESPOSITO No. 69921 Exp. 9-30-10 CIVIL STATE OF CALIFORNIA

THE STATE OF CALIFORNIA OR ITS OFFICERS OR AGENTS SHALL NOT BE RESPONSIBLE FOR THE ACCURACY OR COMPLETENESS OF SCANNED COPIES OF THIS PLAN SHEET.

RBF CONSULTING
14275 ALTON PKWY
IRVINE, CA 92618

OCTA
550 S. MAIN STREET
ORANGE, CA 92863

NOTE:

1. FOR NOTES, LEGEND, AND ABBREVIATIONS, SEE SHEETS E-69 AND E-70.

TYPE C CABLE (SR-57 FO MAINLINE)

FIBER No.	EXISTING DATA NODE (SR-57/SR-91)	TMS 2353	FIBER No.	EXISTING SPLICE VAULT "A" STA 443+36	TMS 2350	TS-ORANGETHORPE	RMS 967	RMS 995	CENSUS STATION	CMS 20	RMS 994	TS-CHAPMAN	RMS 993	TS-NUTWOOD	RMS 968	CMS 63	RMS 992	RMS 969	TS-YORBA LINDA	RMS 991	CMS 99	RMS 970	SPLICE VAULT "B" STA 578+90	FIBER No.	REMARKS
1-2	<X>		1-2	<X>																			<X>	1-2	TMS 17
3-4	<X>	<X>	3-4	<X>	<X>		<X>	<X>	<X>		<X>		<X>		<X>		<X>	<X>		<X>		<X>	<X>	3-4	TMS 16
5-6			5-6																					5-6	TMS 17 TO HUB 2
7-8			7-8																					7-8	FUTURE
9-10	<X>		9-10	<X>						<X>						<X>					<X>		<X>	9-10	CMS 11
11-12			11-12																					11-12	CMS 11 TO HUB 2
13-18			13-18																					13-18	FUTURE
19-20	<X>		19-20	<X>		<X>						<X>		<X>					<X>				<X>	19-20	TS 11
21-22			21-22																					21-22	TS 11 TO HUB 2
23-26			23-26																					23-26	FUTURE
27	<O>	<O>	27	<O>	<O>	<O>	<O>	<O>	<O>	<O>	<O>	<O>	<O>	<O>	<O>	<O>	<O>	<O>	<O>	<O>	<O>	<O>	<O>	27	VOICE
28-29	<O>		28-29	<O>																			<O>	28-29	DN 10 TO TMC AND HUB 2
30-31	<O>		30-31	<O>																			<O>	30-31	DN 10 (BU) TO HUB 2 TO TMC
32-72			32-72																					32-72	FUTURE

LEGEND:

X - TERMINATED ACTIVE
O - TERMINATED SPARE
< > - ARROW POINTS TO THE DIRECTION OF TRANSMISSION

COMMUNICATION SYSTEM
(SR-57 TYPE C CABLE PROPOSED FIBER ASSIGNMENTS)

NO SCALE

E-112

THIS PLAN IS ACCURATE FOR ELECTRICAL WORK ONLY.

STATE OF CALIFORNIA - DEPARTMENT OF TRANSPORTATION
Caltrans
CONSULTANT FUNCTIONAL SUPERVISOR: CARLOS A. ORTIZ
CALCULATED-DESIGNED BY: JESSICA PARRENO
CHECKED BY: ARMANDO SOLIS
REVISED BY
DATE REVISED

H:\pdata\10105878\Admin\submittals\2009-06-29 FINAL Submittal\100% ELECTRONIC SUBMITTAL - MERGED1FDEES2009\17:39 ...ffic\c0F031ua112.dgn

LAST REVISION 08-01-08
DATE PLOTTED => 21-DEC-2009
TIME PLOTTED => 12:39

NOTE:

1. FOR NOTES, LEGEND, AND ABBREVIATIONS, SEE SHEETS E-69 AND E-70.

Dist	COUNTY	ROUTE	POST MILES TOTAL PROJECT	SHEET No.	TOTAL SHEETS
12	Ora	57	16.2/18.6	681	960

Mark J. Esposito 7/15/09
REGISTERED CIVIL ENGINEER DATE

12-14-09
PLANS APPROVAL DATE

REGISTERED PROFESSIONAL ENGINEER MARK J. ESPOSITO No. 69921 Exp. 9-30-10 CIVIL STATE OF CALIFORNIA

THE STATE OF CALIFORNIA OR ITS OFFICERS OR AGENTS SHALL NOT BE RESPONSIBLE FOR THE ACCURACY OR COMPLETENESS OF SCANNED COPIES OF THIS PLAN SHEET.

RBF CONSULTING
14275 ALTON PKWY
IRVINE, CA 92618

OCTA
550 S. MAIN STREET
ORANGE, CA 92863

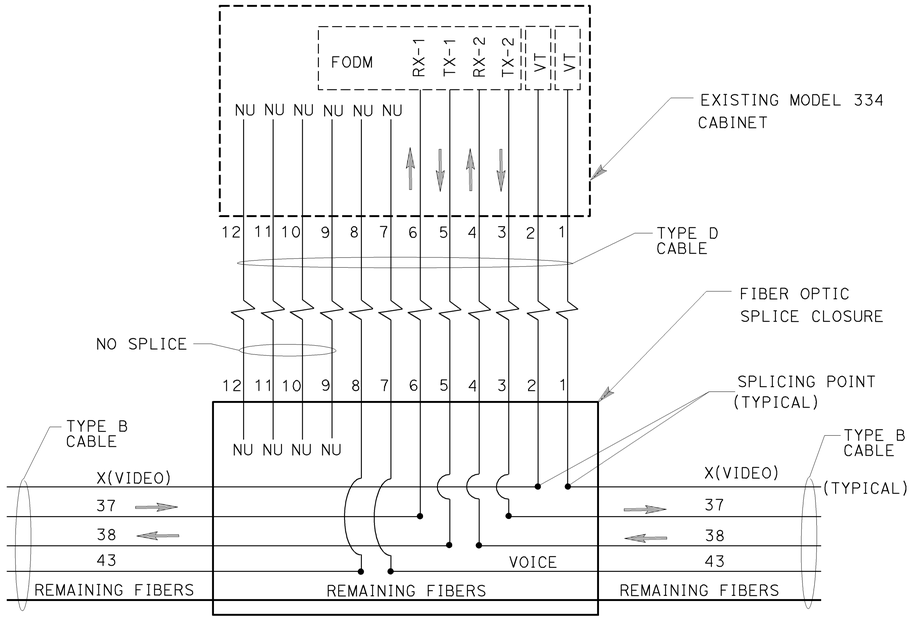

TYPICAL CONNECTION OF TYPE D TO TYPE B AT CCTV SITE

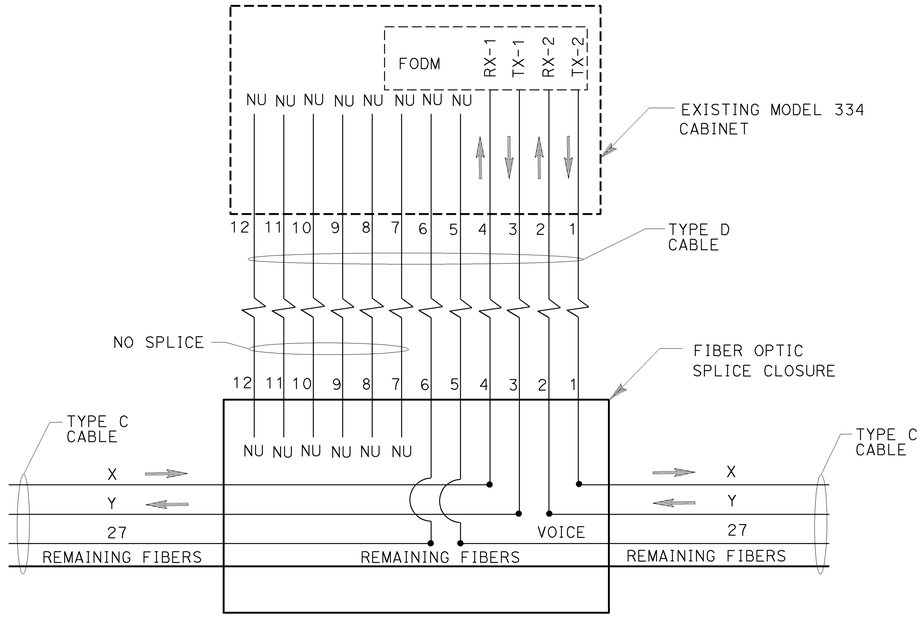

TYPICAL CONNECTION OF TYPE D TO TYPE C FOR RMS, TMS, CMS, AND TS

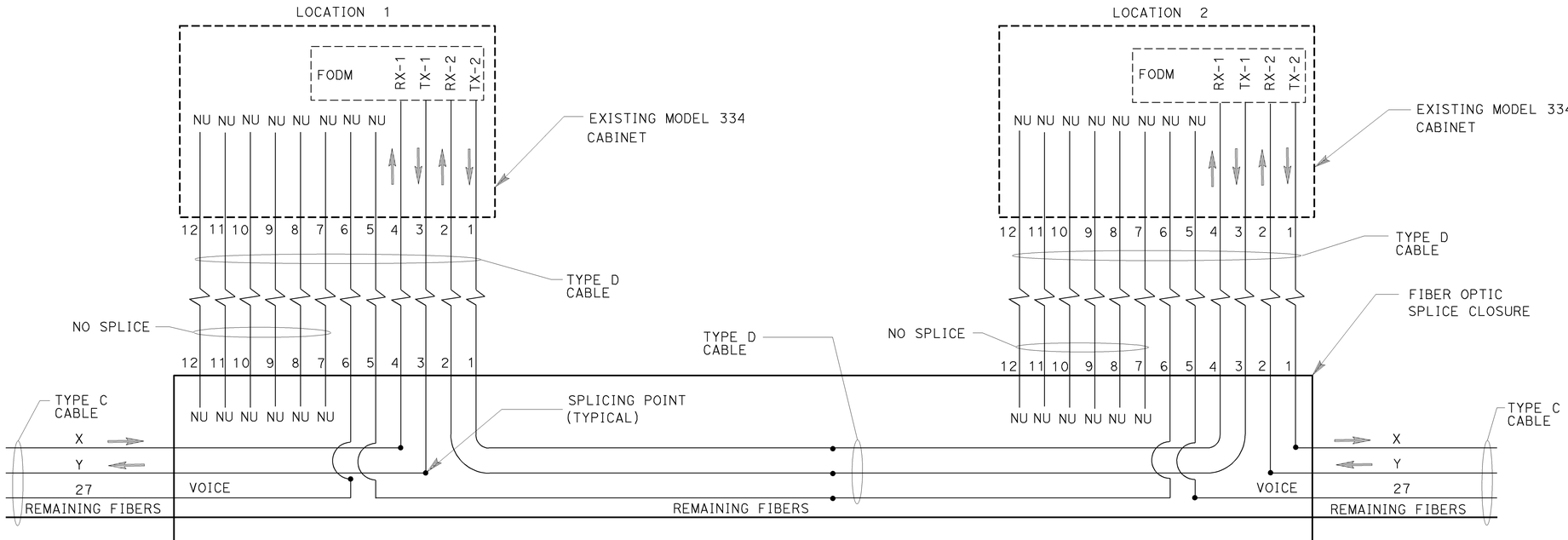

TYPICAL CONNECTION OF TYPE D TO TYPE C FOR TRAFFIC ELEMENTS (TWO LOCATIONS OF SAME KIND IN ONE SPLICE CLOSURE)

CIRCUIT	FIBER	
	X	Y
RMS/TMS	3	4
CMS	9	10
TRAFFIC SIGNAL	19	20

COMMUNICATION SYSTEM
(FIBER OPTIC SPLICING DETAILS TYPE D TO TYPE B AND TYPE C)

NO SCALE

E-113

THIS PLAN IS ACCURATE FOR ELECTRICAL WORK ONLY.

STATE OF CALIFORNIA - DEPARTMENT OF TRANSPORTATION
Caltrans
CONSULTANT FUNCTIONAL SUPERVISOR: CARLOS A. ORTIZ
CALCULATED-DESIGNED BY: JESSICA PARRENO
CHECKED BY: ARMANDO SOLIS
REVISED BY
DATE REVISED

H:\pdata\10105878\Admin\submittals\2009-06-29 FINAL Submittal\100% ELECTRONIC SUBMITTAL - MERGED1FDEES2009\3\traffic\c0F031ua113.dgn

LAST REVISION 08-01-08
DATE PLOTTED => 21-DEC-2009
TIME PLOTTED => 13:06

Dist	COUNTY	ROUTE	POST MILES TOTAL PROJECT	SHEET No.	TOTAL SHEETS
12	Ora	57	16.2/18.6	682	960

Mark J. Esposito 7/15/09
REGISTERED CIVIL ENGINEER DATE

12-14-09
PLANS APPROVAL DATE

REGISTERED PROFESSIONAL ENGINEER MARK J. ESPOSITO No. 69921 Exp. 9-30-10 CIVIL STATE OF CALIFORNIA

THE STATE OF CALIFORNIA OR ITS OFFICERS OR AGENTS SHALL NOT BE RESPONSIBLE FOR THE ACCURACY OR COMPLETENESS OF SCANNED COPIES OF THIS PLAN SHEET.

RBF CONSULTING
14275 ALTON PKWY
IRVINE, CA 92618

OCTA
550 S. MAIN STREET
ORANGE, CA 92863

NOTE:

1. FOR NOTES, LEGEND, AND ABBREVIATIONS, SEE SHEETS E-69 AND E-70.

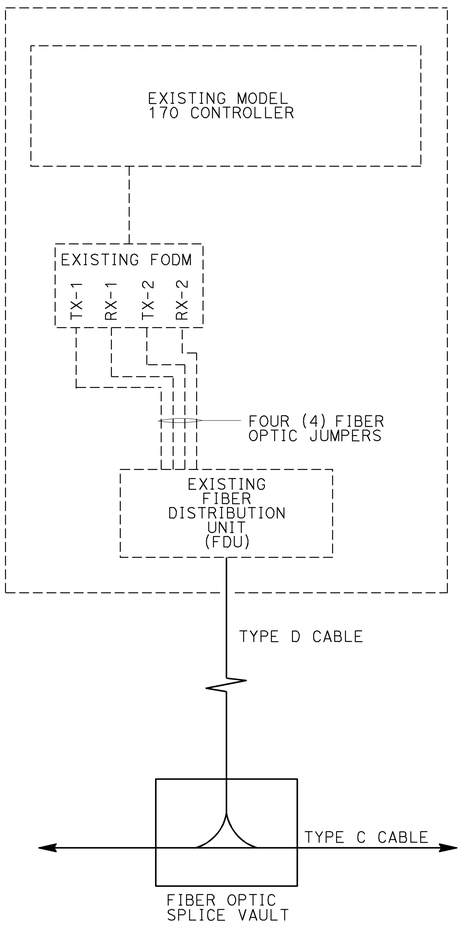

SCHEMATIC

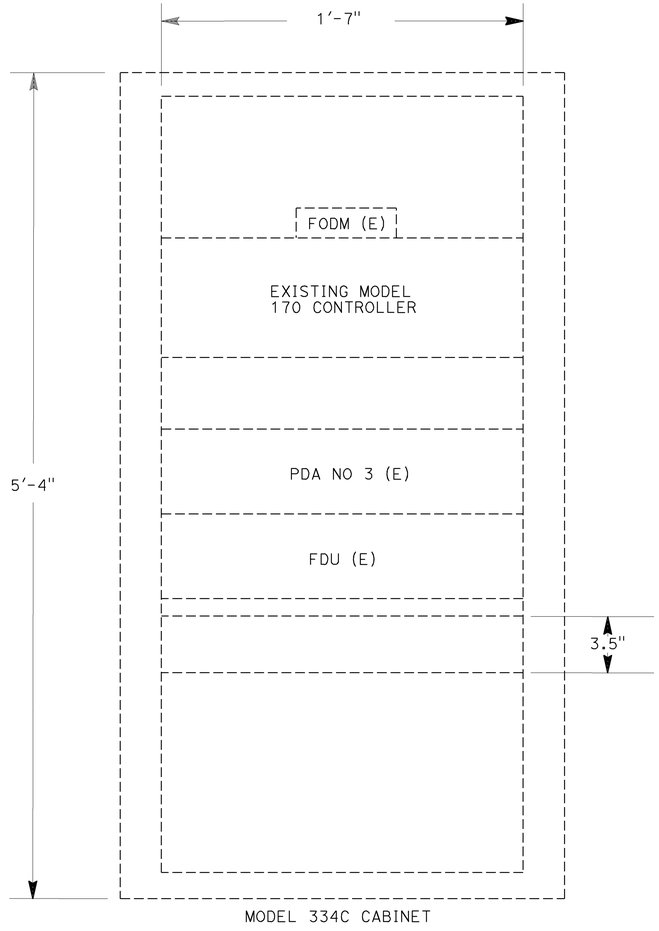

EQUIPMENT RACK LAYOUT

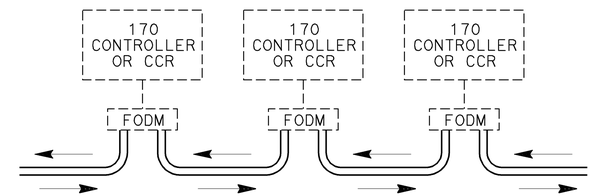

TYPICAL CONNECTION OF FIELD CONTROLLERS WITH SMFO

LEGEND(THIS SHEET):

TX-1 : TRANSMIT FIBER IN DIRECTION OF MASTER FODM
RX-1 : RECEIVE FIBER IN DIRECTION OF MASTER FODM
TX-2 : TRANSMIT FIBER IN OPPOSITE DIRECTION OF MASTER FODM
RX-2 : RECEIVE FIBER IN OPPOSITE DIRECTION OF MASTER FODM
(E): EXISTING

COMMUNICATION SYSTEM
(CONTROLLER INTERFACE)

NO SCALE

E-114

THIS PLAN IS ACCURATE FOR ELECTRICAL WORK ONLY.

STATE OF CALIFORNIA - DEPARTMENT OF TRANSPORTATION
Caltrans
CONSULTANT FUNCTIONAL SUPERVISOR: CARLOS A. ORTIZ
CALCULATED-DESIGNED BY: JESSICA PARRENO
CHECKED BY: ARMANDO SOLIS
REVISED BY
DATE REVISED

H:\pdata\10105878\Admin\submittals\2009-06-29 FINAL Submittal\100% ELECTRONIC SUBMITTAL - MERGED FILES\2009\Traffic\c0F031ua114.dgn

LAST REVISION 08-01-08
DATE PLOTTED => 21-DEC-2009
TIME PLOTTED => 13:06

Dist	COUNTY	ROUTE	POST MILES TOTAL PROJECT	SHEET No.	TOTAL SHEETS
12	Ora	57	16.2/18.6	683	960

Mark J. Esposito 7/15/09
REGISTERED CIVIL ENGINEER DATE

12-14-09
PLANS APPROVAL DATE

REGISTERED PROFESSIONAL ENGINEER MARK J. ESPOSITO No. 69921 Exp. 9-30-10 CIVIL STATE OF CALIFORNIA

THE STATE OF CALIFORNIA OR ITS OFFICERS OR AGENTS SHALL NOT BE RESPONSIBLE FOR THE ACCURACY OR COMPLETENESS OF SCANNED COPIES OF THIS PLAN SHEET.

RBF CONSULTING
14275 ALTON PKWY
IRVINE, CA 92618

OCTA
550 S. MAIN STREET
ORANGE, CA 92863

NOTE:

1. FOR NOTES, LEGEND, AND ABBREVIATIONS, SEE SHEETS E-69 AND E-70.

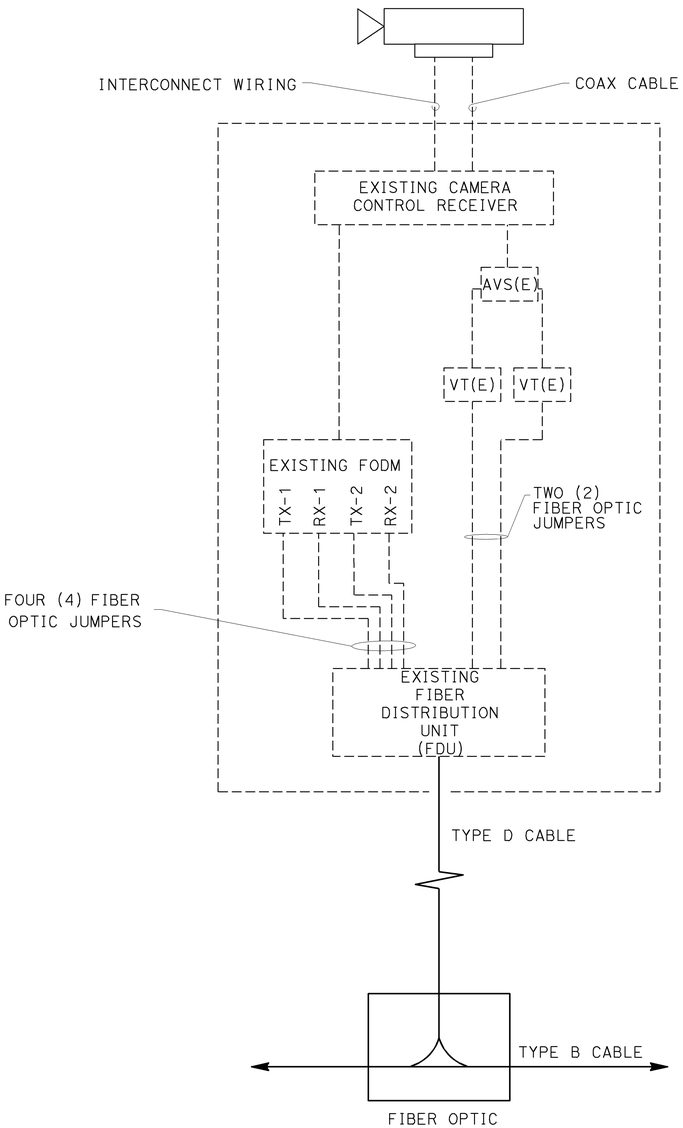

TYPICAL CCTV

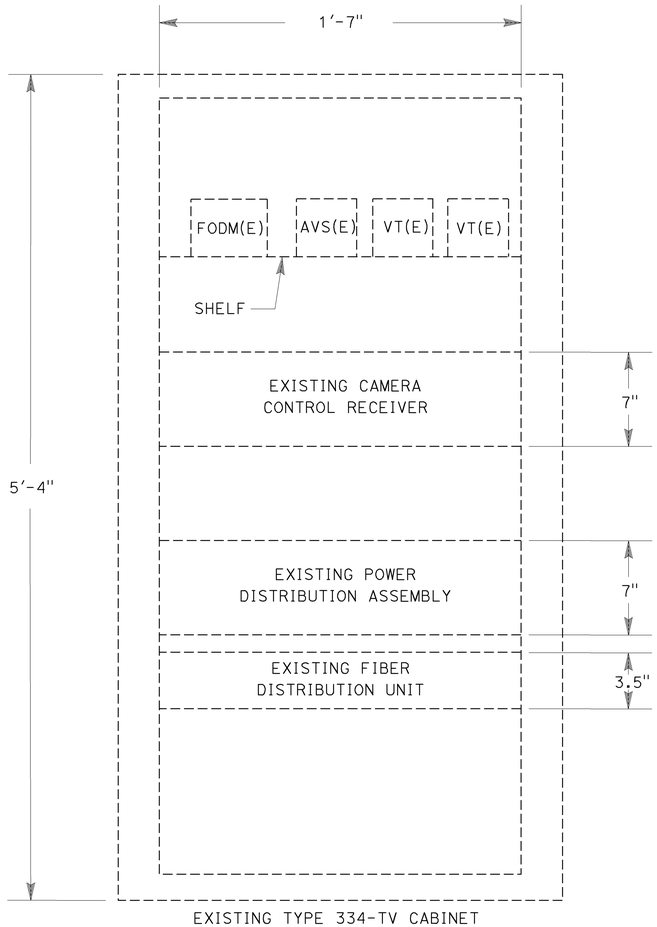

EXISTING EQUIPMENT RACK LAYOUT

LEGEND (THIS SHEET):

TX-1 : TRANSMIT FIBER IN DIRECTION OF MASTER FODM
RX-1 : RECEIVE FIBER IN DIRECTION OF MASTER FODM
TX-2 : TRANSMIT FIBER IN OPPOSITE DIRECTION OF MASTER FODM
RX-2 : RECEIVE FIBER IN OPPOSITE DIRECTION OF MASTER FODM
(E): EXISTING

COMMUNICATION SYSTEM
(CCTV SITE)

NO SCALE

THIS PLAN IS ACCURATE FOR ELECTRICAL WORK ONLY.

E-115

STATE OF CALIFORNIA - DEPARTMENT OF TRANSPORTATION
Caltrans
CONSULTANT FUNCTIONAL SUPERVISOR: CARLOS A. ORTIZ
CALCULATED-DESIGNED BY: JESSICA PARRENO
CHECKED BY: ARMANDO SOLIS
REVISED BY
DATE REVISED

H:\pdata\10105878\Admin\submittals\2009-06-29 FINAL Submittal\100% ELECTRONIC SUBMITTAL - MERGED\FDEES2009\Traffic\c0F031ua115.dgn

LAST REVISION 08-01-08
DATE PLOTTED => 21-DEC-2009
TIME PLOTTED => 13:06

Dist	COUNTY	ROUTE	POST MILES TOTAL PROJECT	SHEET No.	TOTAL SHEETS
12	Ora	57	16.2/18.6	684	960

Mark J. Esposito 7/15/09
REGISTERED CIVIL ENGINEER DATE

12-14-09
PLANS APPROVAL DATE

REGISTERED PROFESSIONAL ENGINEER
MARK J. ESPOSITO
No. 69921
Exp. 9-30-10
CIVIL
STATE OF CALIFORNIA

THE STATE OF CALIFORNIA OR ITS OFFICERS OR AGENTS SHALL NOT BE RESPONSIBLE FOR THE ACCURACY OR COMPLETENESS OF SCANNED COPIES OF THIS PLAN SHEET.

RBF CONSULTING
14275 ALTON PKWY
IRVINE, CA 92618

OCTA
550 S. MAIN STREET
ORANGE, CA 92863

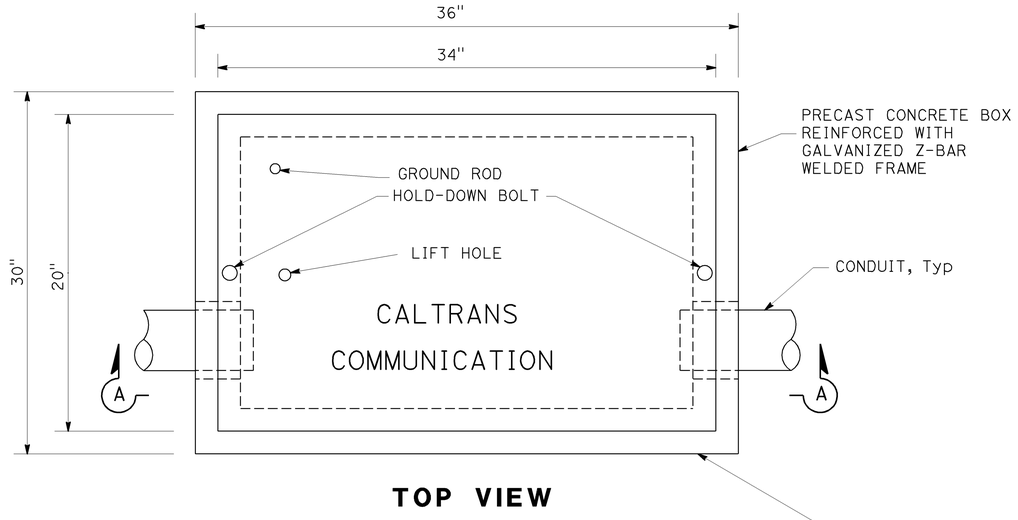

TOP VIEW

NOTES (THIS SHEET):

1. SERVICE CONDUITS APPEAR IN PULL BOXES AS SHOWN ON PLANS. WHEN SERVICE CONDUITS ARE PRESENT, GROUNDING SHALL BE AS SPECIFIED IN SECTION 86-2.10 OF STANDARD SPECIFICATIONS.
2. CONTRACTOR SHALL INSTALL ADDITIONAL CONDUIT ENTRANCES AS REQUIRED.
3. SEE SPECIAL PROVISIONS REGARDING HOLD DOWN BOLTS FOR TRAFFIC COVERS.
4. WHERE FURNISHED, TOP CONDUIT TO BE SPARE.
5. FOR NOTES, LEGEND, AND ABBREVIATIONS, SEE SHEETS E-69 AND E-70.

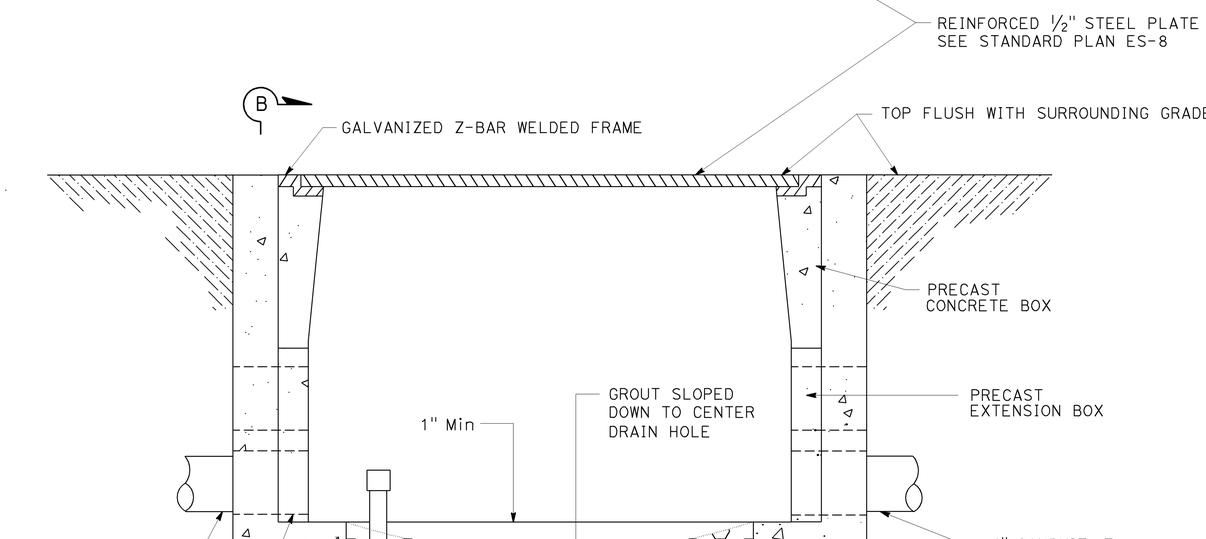

SECTION A-A

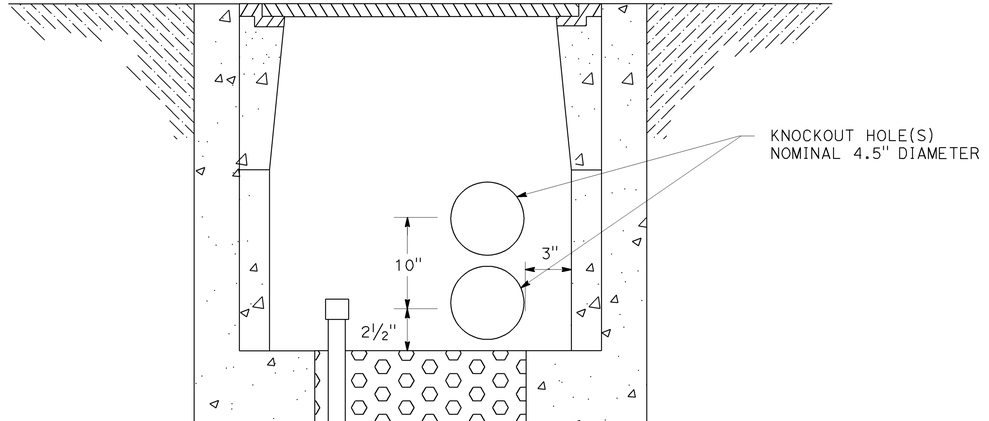

SECTION B-B

COMMUNICATION SYSTEM
(COMMUNICATION PULL BOX DETAILS)

NO SCALE

E-116

THIS PLAN IS ACCURATE FOR ELECTRICAL WORK ONLY.

LAST REVISION 08-01-08 | DATE PLOTTED => 21-DEC-2009 | TIME PLOTTED => 13:06

STATE OF CALIFORNIA - DEPARTMENT OF TRANSPORTATION | CONSULTANT FUNCTIONAL SUPERVISOR: CARLOS A. ORTIZ | CALCULATED-DESIGNED BY: JESSICA PARRENO | CHECKED BY: ARMANDO SOLIS | REVISED BY | DATE REVISED

H:\pdata\10105878\Admin\submittals\2009-06-29 FINAL Submittal\100% ELECTRONIC SUBMITTAL - MERGED\DGN\Traffic\c0F031ua116.dgn

BORDER LAST REVISED 4/11/2008 | RELATIVE BORDER SCALE IS IN INCHES (0 1 2 3) | USERNAME => trcarol | DGN FILE => c0F031ua116.dgn | CU 12220 | EA 0F0311

Dist	COUNTY	ROUTE	POST MILES TOTAL PROJECT	SHEET No.	TOTAL SHEETS
12	Ora	57	16.2/18.6	685	960

Mark J. Esposito 7/15/09
REGISTERED CIVIL ENGINEER DATE

12-14-09
PLANS APPROVAL DATE

REGISTERED PROFESSIONAL ENGINEER — MARK J. ESPOSITO No. 69921 Exp. 9-30-10 CIVIL — STATE OF CALIFORNIA

THE STATE OF CALIFORNIA OR ITS OFFICERS OR AGENTS SHALL NOT BE RESPONSIBLE FOR THE ACCURACY OR COMPLETENESS OF SCANNED COPIES OF THIS PLAN SHEET.

RBF CONSULTING
14275 ALTON PKWY
IRVINE, CA 92618

OCTA
550 S. MAIN STREET
ORANGE, CA 92863

SPLICE VAULT COVER MARKED "TOS COMMUNICATION". LETTERS TO BE 1" TO 3" MAX HIGH.

THE FRAME AND LID OF THE VAULT SHALL COMPLY WITH THE LOAD RATING APPLICABLE TO THE VAULT LOCATION AS DESCRIBED IN THE SPECIAL PROVISIONS

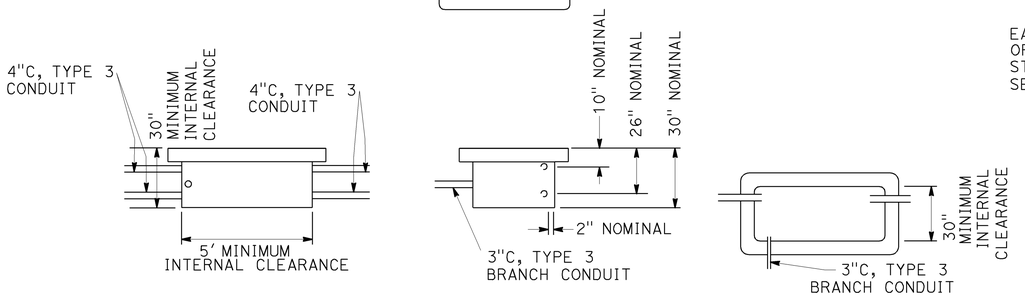

SPLICE VAULT

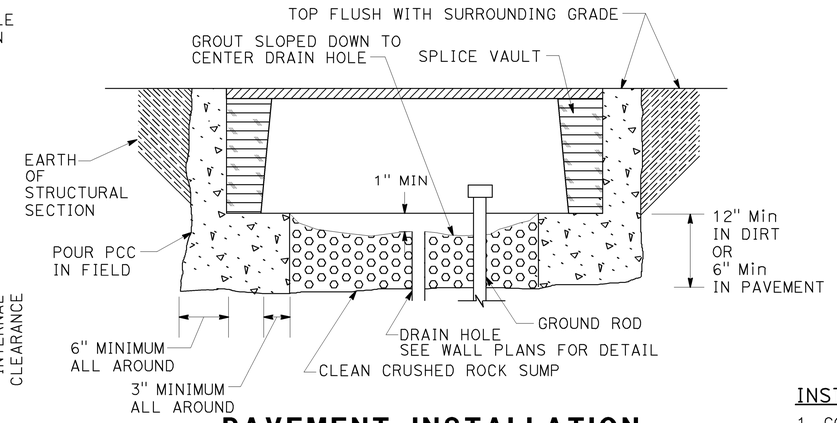

PAVEMENT INSTALLATION

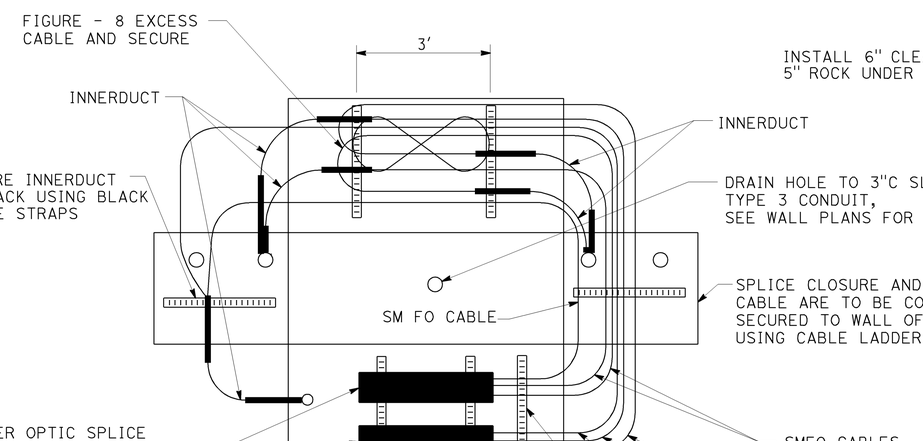

TOP VIEW - WALLS FOLDED DOWN FOR CLARITY

CABLE INSTALLATION

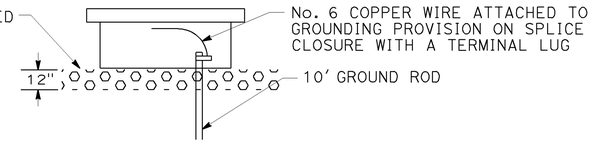

VAULT INSTALLATION

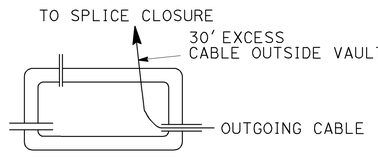

STEP 1

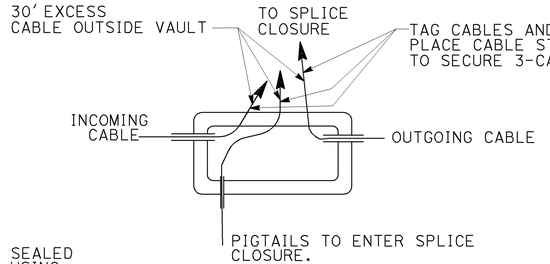

STEP 2

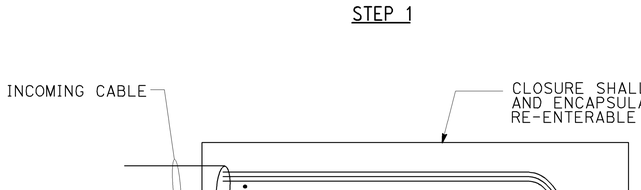

STEP 3
TYPICAL FIBER SPLICE CLOSURE

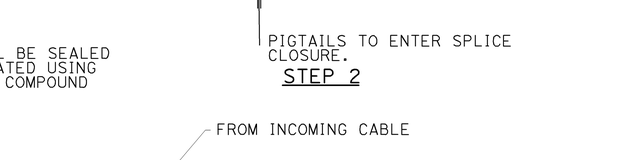

STEP 4
TYPICAL FIBER SPLICE TRAY

SPLICE PROCEDURE

NOTES (THIS SHEET):

1. UPON ACCEPTANCE OF THE WORK ALL CONDUITS SHALL BE SEALED WITH COMPATIBLE SEALANT MATERIAL.
2. ALL GROUND CONNECTIONS SHALL BE COATED WITH OXIDATION PROHIBITING COMPOUND.
3. ALL CABLE STRAPS SHALL BE DESIGNED TO WITHSTAND ULTRA-VIOLET EXPOSURE.
4. THE VAULT SHALL BE CAULKED AFTER ALL KNOWN ENTRANCES HAVE BEEN MADE.
5. INSTALL ALL CABLES IN LOWER 4" CONDUIT.
6. UPPER 4" CONDUIT IS SPARE ONLY.
7. VAULT SHALL HAVE INTEGRAL BASE OR SHALL BE GROUTED PER STANDARD SPECIFICATION OF PULL BOXES.
8. NUMBER OF SPLICE CLOSURES MAY VARY.
9. FOR NOTES, LEGEND, AND ABBREVIATIONS, SEE SHEETS E-69 AND E-70.

INSTALLATION NOTES (THIS SHEET):

1. CONCRETE RING SHALL BE MINOR CONCRETE.
2. PAVEMENT AND SUBGRADE TO BE AS DIRECTED BY THE ENGINEER.

COMMUNICATION SYSTEM (SPLICE VAULT DETAILS)

NO SCALE

E-117

THIS PLAN IS ACCURATE FOR ELECTRICAL WORK ONLY.

STATE OF CALIFORNIA - DEPARTMENT OF TRANSPORTATION
Caltrans
CONSULTANT FUNCTIONAL SUPERVISOR: CARLOS A. ORTIZ
CALCULATED-DESIGNED BY: JESSICA PARRENO
CHECKED BY: ARMANDO SOLIS
REVISED BY
DATE REVISED

H:\pdata\10105878\Admin\submittals\2009-06-29 FINAL Submittal\100% ELECTRONIC SUBMITTAL - MERGED\DGN\c0F031ua117.dgn
DATE PLOTTED => 21-DEC-2009
TIME PLOTTED => 13:06
LAST REVISION 08-01-08

BORDER LAST REVISED 4/11/2008
RELATIVE BORDER SCALE IS IN INCHES 0 1 2 3
USERNAME => trcarol
DGN FILE => c0F031ua117.dgn
CU 12220
EA 0F0311

Dist	COUNTY	ROUTE	POST MILES TOTAL PROJECT	SHEET No.	TOTAL SHEETS
12	Ora	57	16.2/18.6	686	960

Mark J. Esposito 7/15/09
REGISTERED CIVIL ENGINEER DATE

12-14-09
PLANS APPROVAL DATE

REGISTERED PROFESSIONAL ENGINEER
MARK J. ESPOSITO
No. 69921
Exp. 9-30-10
CIVIL
STATE OF CALIFORNIA

THE STATE OF CALIFORNIA OR ITS OFFICERS OR AGENTS SHALL NOT BE RESPONSIBLE FOR THE ACCURACY OR COMPLETENESS OF SCANNED COPIES OF THIS PLAN SHEET.

RBF CONSULTING
14275 ALTON PKWY
IRVINE, CA 92618

OCTA
550 S. MAIN STREET
ORANGE, CA 92863

NOTES (THIS SHEET):

1. WHEN TRENCH TRANSITIONS FROM ASPHALT TO DIRT AREAS, CONDUIT TO GRADUALLY DROP FROM 9" Min DEPTH TO 30" Min DEPTH WITHIN DIRT AREA.
2. FOR NOTES, LEGEND, AND ABBREVIATIONS, SEE SHEETS E-69 AND E-70.

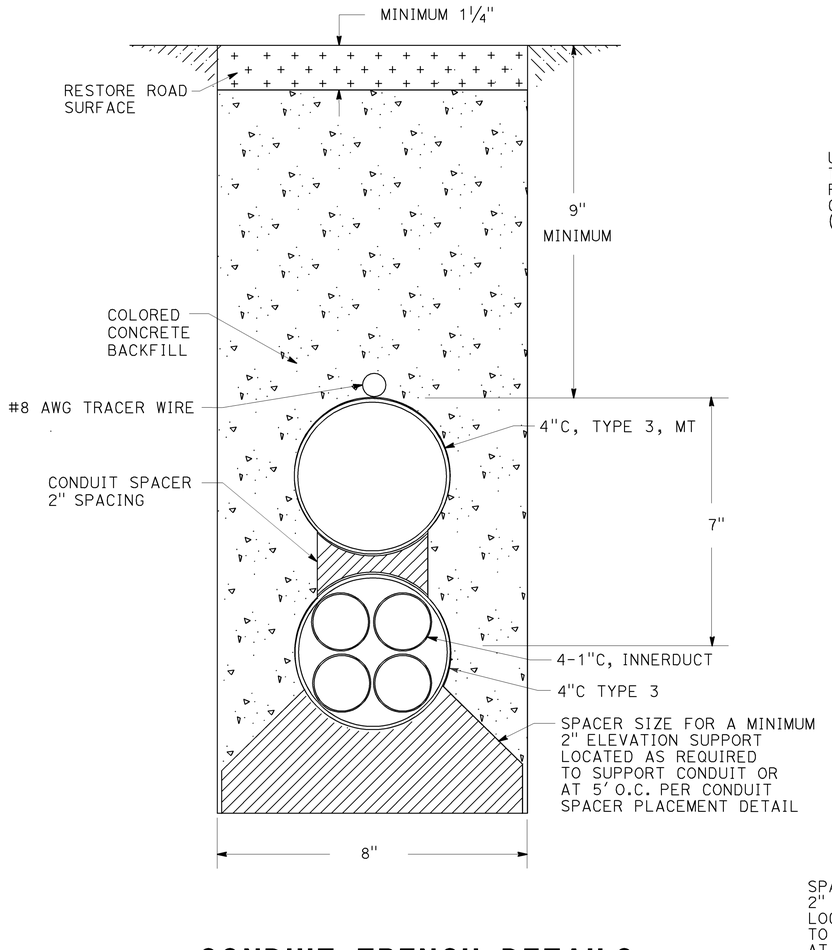

CONDUIT TRENCH DETAILS (IN PAVEMENT)

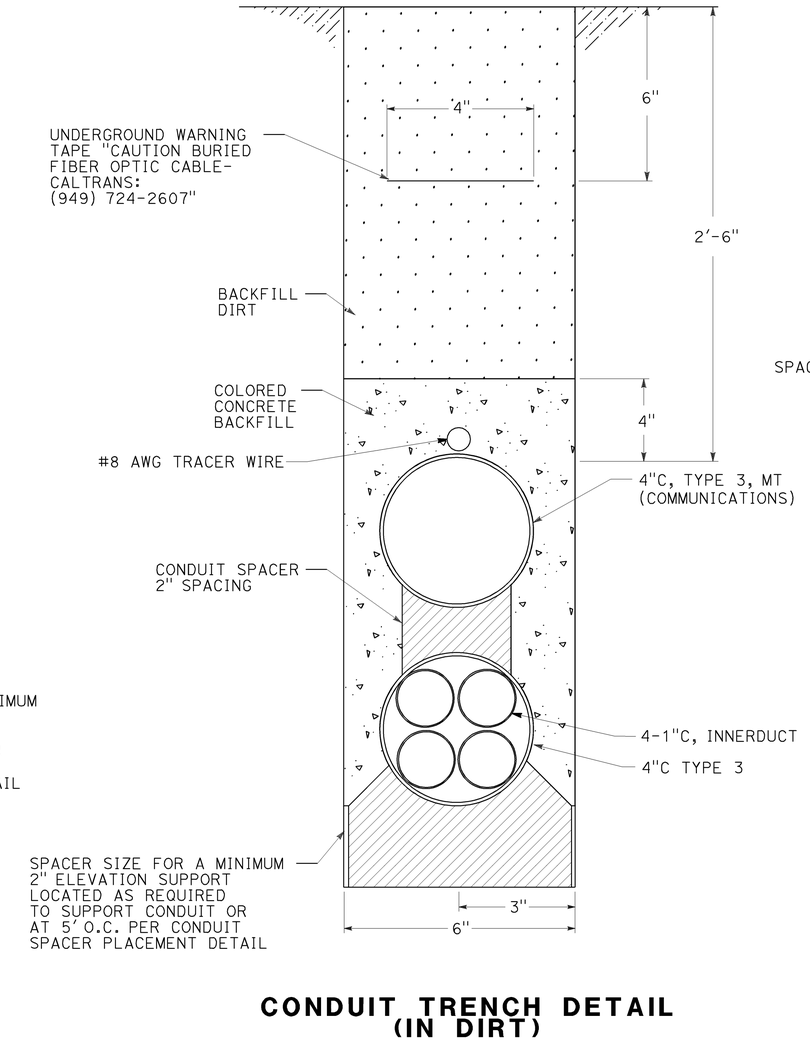

CONDUIT TRENCH DETAIL (IN DIRT)

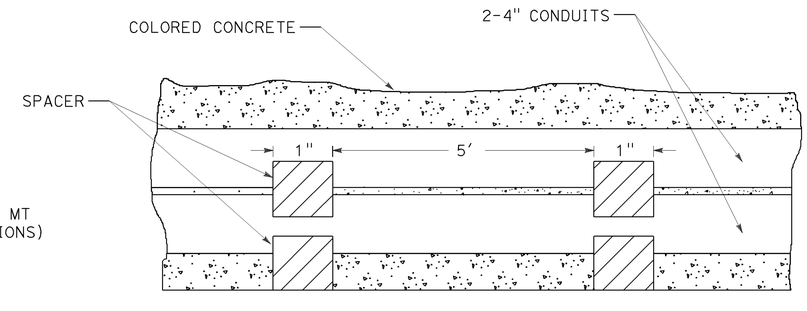

CONDUIT SPACER PLACEMENT

SIDE VIEW

COMMUNICATION SYSTEM (CONDUIT TRENCH DETAILS)

NO SCALE

E-118

THIS PLAN IS ACCURATE FOR ELECTRICAL WORK ONLY.

LAST REVISION DATE PLOTTED => 22-DEC-2009
TIME PLOTTED => 11:17

STATE OF CALIFORNIA - DEPARTMENT OF TRANSPORTATION
Caltrans
CONSULTANT FUNCTIONAL SUPERVISOR: CARLOS A. ORTIZ
CALCULATED-DESIGNED BY: JESSICA PARRENO
CHECKED BY: ARMANDO SOLIS
REVISED BY
DATE REVISED

H:\pdata\10105878\Admin\submittals\2009-06-29 FINAL Submittal\100% ELECTRONIC SUBMITTAL - MERGED\OF0311UA118.DGN
DESIGN BY: TRSTRK
DRAWN BY: TRSTRK
CHECKED BY:

BORDER LAST REVISED 4/11/2008
RELATIVE BORDER SCALE IS IN INCHES 0 1 2 3
USERNAME => trstrk
DGN FILE => c0F031ua118.dgn
CU 12220
EA 0F0311

DIST	COUNTY	ROUTE	POST MILES TOTAL PROJECT	SHEET NO.	TOTAL SHEETS
12	Ora	57	16.2/18.6	687	960

REGISTERED CIVIL ENGINEER

November 17, 2006
PLANS APPROVAL DATE

REGISTERED PROFESSIONAL ENGINEER
Dallas Forester
No. C37765
Exp. 12-31-06
CIVIL
STATE OF CALIFORNIA

The State of California or its officers or agents shall not be responsible for the accuracy or completeness of electronic copies of this plan sheet.

To accompany plans dated 12-14-09

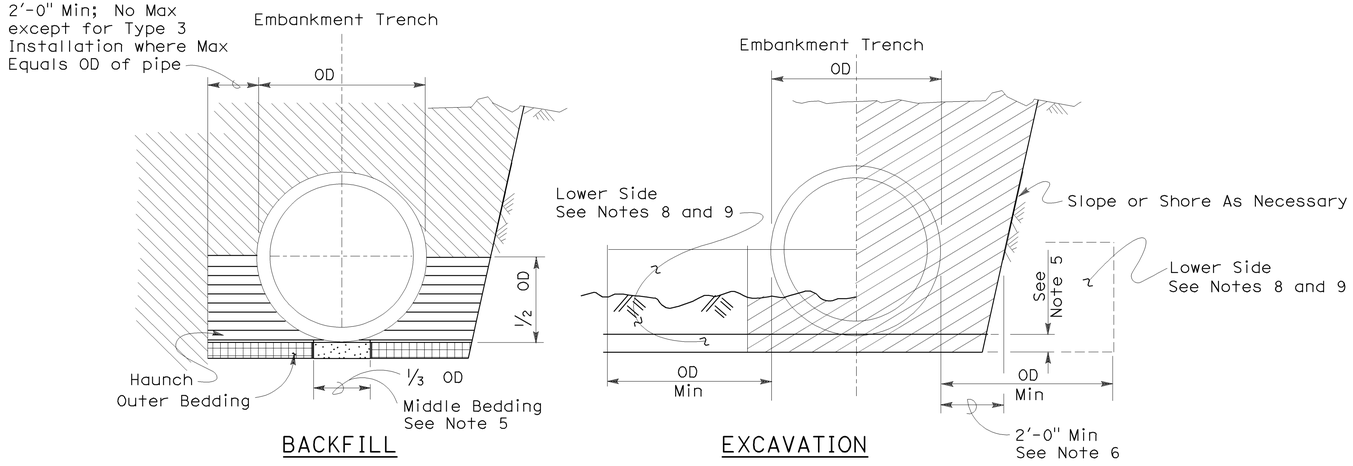

TYPE 1 INSTALLATION:

The haunch and outer bedding shall be compacted to a minimum 90 percent relative compaction. In addition, the minimum sand equivalent in these areas shall be 30 and the maximum percentage passing the 75 μm sieve size shall be 12.

TYPE 2 INSTALLATION:

The haunch and outer bedding shall be compacted to a minimum 90 percent relative compaction. In addition, the minimum sand equivalent in these areas shall be 25.

TYPE 3 INSTALLATION:

The haunch and outer bedding shall be compacted to a minimum 85 percent relative compaction. 90 percent relative compaction will be required where the fill over the pipe is less than 4'-0" or 1/2 OD.

INSTALLATION TYPE 1

MINIMUM CLASS AND D-LOAD	COVER	
	108" Dia AND SMALLER	OVER 108" Dia
Class II 1000D	14.9'	12.9'
Class III 1350D	15.0' - 20.9'	13.0' - 18.9'
Class III Special 1700D	21.0' - 26.9'	19.0' - 24.9'
Class IV 2000D	27.0' - 31.9'	25.0' - 29.9'
Class IV Special 2500D	32.0' - 40.9'	30.0' - 38.9'
Class V 3000D	41.0' - 49.9'	39.0' - 46.9'
Class V Special 3600D	50.0' - 59.0'	47.0' - 58.0'

INSTALLATION TYPE 2

MINIMUM CLASS AND D-LOAD	COVER
Class II 1000D	9.9'
Class III 1350D	10.0'- 14.9'
Class III Special 1700D	15.0' - 19.9'
Class IV 2000D	20.0' - 24.9'
Class IV Special 2500D	25.0' - 31.9'
Class V 3000D	32.0' - 38.9'
Class V Special 3600D	39.0' - 47.0'

INSTALLATION TYPE 3

MINIMUM CLASS AND D-LOAD	COVER	
	48" Dia AND SMALLER	OVER 48" Dia
Class II 1000D	7.9'	5.9'
Class III 1350D	8.0' - 10.9'	6.0' - 8.9'
Class III Special 1700D	11.0' - 14.9'	9.0' - 12.9'
Class IV 2000D	15.0' - 17.9'	13.0' - 15.9'
Class IV Special 2500D	18.0' - 21.9'	16.0' - 19.9'
Class V 3000D	22.0' - 26.9'	20.0' - 24.9'
Class V Special 3600D	30.0' - 33.0'	25.0' - 31.0'

NOTES:

1. Unless otherwise shown on the plans or specified in the special provision, the Contractor shall have the option of selecting the class of RCP and the type of installation to be used, provided the height of cover does not exceed the value shown for the RCP selected.
   Example: 24" RCP culvert with maximum cover of 19'-0" the options are:
   a) Class III or stronger with Installation Type 1.
   b) Class III Special or stronger with Installation Type 2.
   c) Class IV Special or stronger with Installation Type 3.
   Cover is defined as the maximum vertical distance from top of the pipe to finished grade within the length of any given culvert.
2. The class of RCP and Installation Type selected shall be the same throughout the length of any given culvert.
3. The "length of any culvert" is defined as the culvert between:
   a) Successive drainage structure (inlets, junction boxes, headwalls, etc.).
   b) A drainage structure and the inlet or outlet end of the culvert.
   c) The inlet and outlet end of the culvert when there are no intervening drainage structures.
4. Oval and arch shaped RCP shall not be used.
5. 1/25 OD Min, not less than 3".
6. Slurry cement backfill may be substituted for backfill in the outer bedding and haunch areas. If slurry is used the outer and middle beddings shall be omitted. Prior to installation the soil under the middle 1/3 of the outside diameter of the pipe shall be softened by scarifying or other means to a minimum depth of 1/25 OD, but not less than 3". Where slurry cement backfill is used clear distance to trench wall may be reduced as set forth in Section 19-3.062 of the Standard Specifications.
7. Backfill shall be placed full width of excavation except where dimensions are shown for backfill width or thickness. Dimensions shown are minimums.
8. Lower side shall be suitable material as determined by the Engineer. Otherwise it shall be considered unsuitable as set forth in Section 19-2.02 of the Standard Specifications. See Note 9.
9. Where the pipe is placed in a trench, if the trench walls are sloped at 5 vertical to 1 horizontal or steeper for at least 90 percent of the trench height or up to not less than 12" from the grading plane, the firmness of the soil in the lower side need not be considered.
10. Non-reinforced precast concrete pipe sizes 3'-0" or smaller may be placed under installation Types 1, 2 or 3.

STATE OF CALIFORNIA
DEPARTMENT OF TRANSPORTATION

EXCAVATION AND BACKFILL CONCRETE PIPE CULVERTS

NO SCALE

RSP A62DA DATED NOVEMBER 17, 2006 SUPERSEDES STANDARD PLAN A62DA DATED MAY 1, 2006 - PAGE 20 OF THE STANDARD PLANS BOOK DATED MAY 2006.

REVISED STANDARD PLAN RSP A62DA

2006 REVISED STANDARD PLAN RSP A62DA

10-26-06

DIST	COUNTY	ROUTE	POST MILES TOTAL PROJECT	SHEET NO.	TOTAL SHEETS
12	Ora	57	16.2/18.6	688	960

Randell D. Hiatt
REGISTERED CIVIL ENGINEER

June 6, 2008
PLANS APPROVAL DATE

REGISTERED PROFESSIONAL ENGINEER
Randell D. Hiatt
No. C50200
Exp. 6-30-09
CIVIL
STATE OF CALIFORNIA

The State of California or its officers or agents shall not be responsible for the accuracy or completeness of electronic copies of this plan sheet.

To accompany plans dated 12-14-09

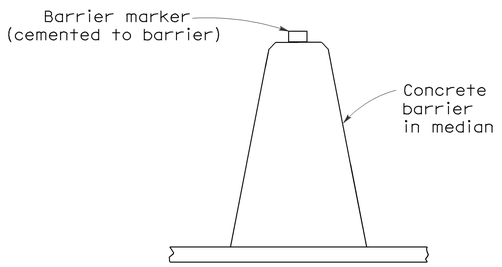

CONCRETE BARRIER TYPE 60 DELINEATION

See Notes 7 and 8

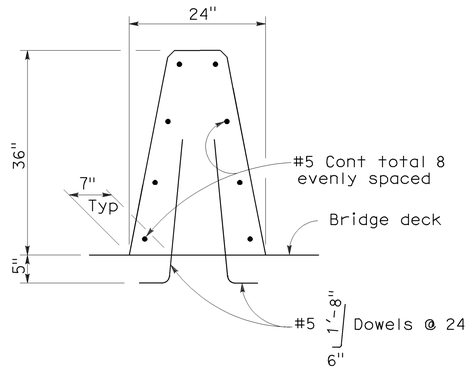

CONCRETE BARRIER TYPE 60A

Details similar to Type 60 except as noted.

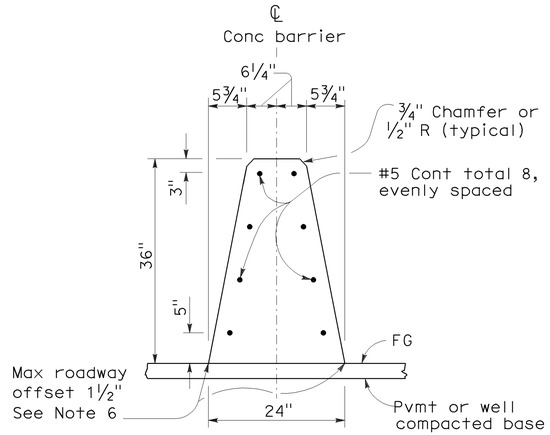

CONCRETE BARRIER TYPE 60

NOTES:

1. See Standard Plan A76B for details of Concrete Barrier Type 60 end anchors, connection to structures and transitions to Concrete Barrier Type 50 and Concrete Barrier Type 60S.
2. See Standard Plan A76C for Concrete Barrier Type 60 transitions at bridge column and sign pedestals.
3. Where glare screen is required on Concrete Barrier Type 60, use Concrete Barrier Type 60G.
4. Where the concrete barrier is added to the face of existing concrete structure, match existing weep holes.
5. Expansion joints in concrete barrier shall be located at all deck, pavement and principal wall joints. Expansion joint filler material shall be the same size as joint or ½" minimum.
6. Where roadway offset is greater than 1½", see Concrete Barrier Type 60C.
7. Barrier delineation to be used when required by the Special Provisions.
8. Spacing of barrier markers to match spacing of raised pavement markers on the adjacent median edgeline pavement delineation.
9. Reinforcing stirrup not required for roadway offsets less than 1'-0".
10. For roadway surfaces offset greater than 1½" to 3", no rebars required. For roadway surfaces offset greater than 3" to 8" use two #4 rebars at 3" above the lower roadway surface. For roadway surfaces offset greater than 8" to 12", use two #4 rebars at 3" above the lower roadway surface and two #4 rebars at 8" above the lower roadway surface. For roadway surfaces offset greater than 12" to 36", use two #4 rebars at 3" above the lower roadway surface and two #4 rebars at every 8" increment vertical spacing above the first two #4 rebars.

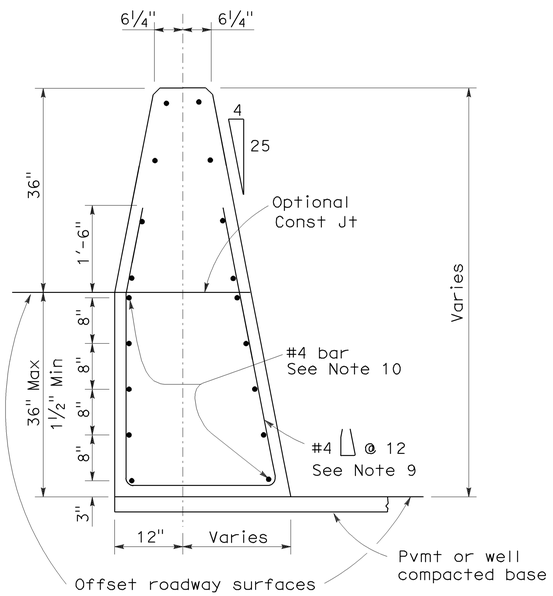

CONCRETE BARRIER TYPE 60C

Details similar to Type 60 except as noted.
Concrete barrier end anchor when necessary.
36" roadway surfaces offset shown.

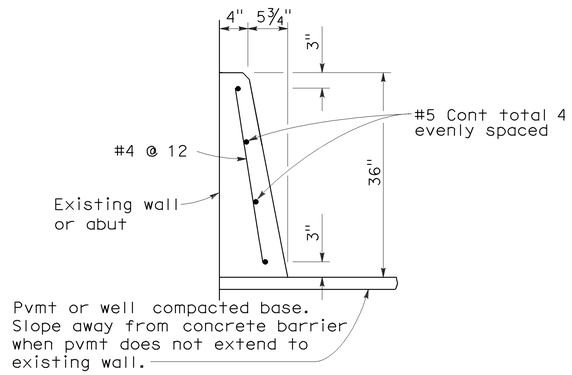

CONCRETE BARRIER TYPE 60D

STATE OF CALIFORNIA
DEPARTMENT OF TRANSPORTATION

CONCRETE BARRIER TYPE 60

NO SCALE

RSP A76A DATED JUNE 6, 2008 SUPERSEDES STANDARD PLAN A76A
DATED MAY 1, 2006 - PAGE 29 OF THE STANDARD PLANS BOOK DATED MAY 2006.

REVISED STANDARD PLAN RSP A76A

2006 REVISED STANDARD RSP A76A

5-21-08

DIST	COUNTY	ROUTE	POST MILES TOTAL PROJECT	SHEET NO.	TOTAL SHEETS
12	Ora	57	16.2/18.6	689	960

Randell D. Hiatt
REGISTERED CIVIL ENGINEER

REGISTERED PROFESSIONAL ENGINEER
Randell D. Hiatt
No. C50200
Exp. 6-30-07
CIVIL
STATE OF CALIFORNIA

October 20, 2006
PLANS APPROVAL DATE

The State of California or its officers or agents shall not be responsible for the accuracy or completeness of electronic copies of this plan sheet.

To accompany plans dated 12-14-09

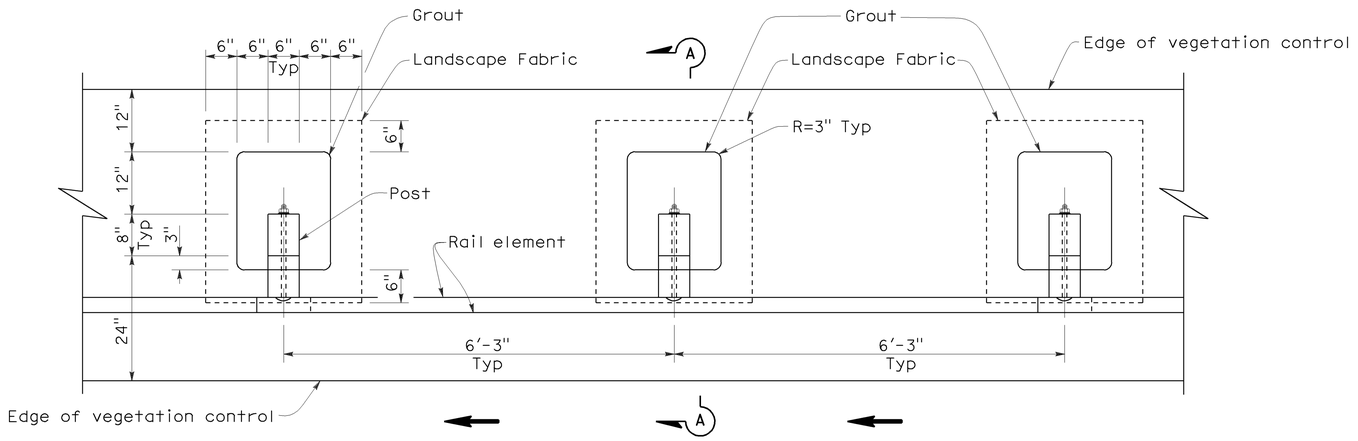

PLAN

NOTES:

1. Where the distance between back of post and hinge point is less than 24", vegetation control to be constructed flush with the back edge of the post.
2. Where dike is constructed under railing, construct vegetation control to back edge of dike. Where paved shoulder is constructed within 24" in front of the post, construct vegetation control to the edge of paved shoulder.
3. Direction of adjacent traffic indicated by ← .

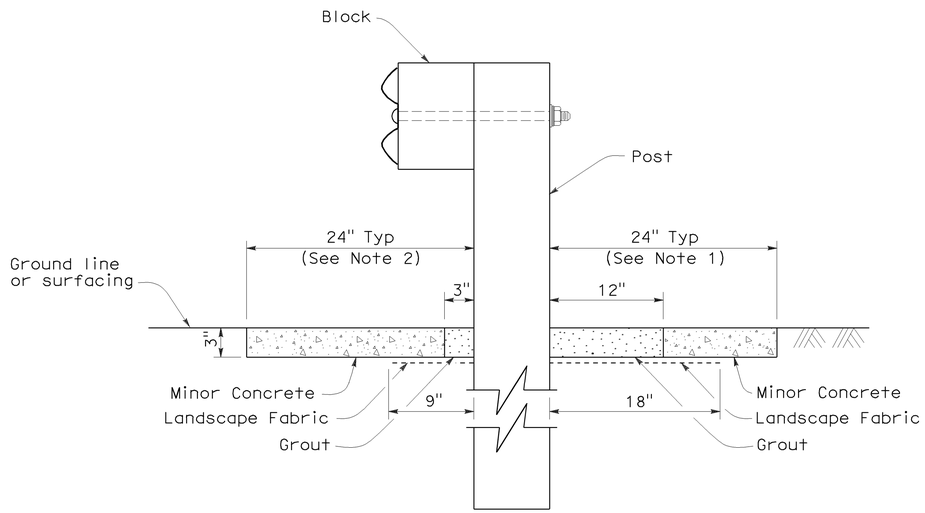

SECTION A-A

STATE OF CALIFORNIA
DEPARTMENT OF TRANSPORTATION

METAL BEAM GUARD RAILING
TYPICAL VEGETATION CONTROL
STANDARD RAILING SECTION

NO SCALE

NSP A77C5 DATED OCTOBER 20, 2006 SUPPLEMENTS THE STANDARD PLANS BOOK DATED MAY 2006.

NEW STANDARD PLAN NSP A77C5

2006 NEW STANDARD PLAN NSP A77C5

7-17-06

DIST	COUNTY	ROUTE	POST MILES TOTAL PROJECT	SHEET NO.	TOTAL SHEETS
12	Ora	57	16.2/18.6	690	960

Randell D. Hiatt
REGISTERED CIVIL ENGINEER

October 20, 2006
PLANS APPROVAL DATE

REGISTERED PROFESSIONAL ENGINEER
Randell D. Hiatt
No. C50200
Exp. 6-30-07
CIVIL
STATE OF CALIFORNIA

The State of California or its officers or agents shall not be responsible for the accuracy or completeness of electronic copies of this plan sheet.

To accompany plans dated 12-14-09

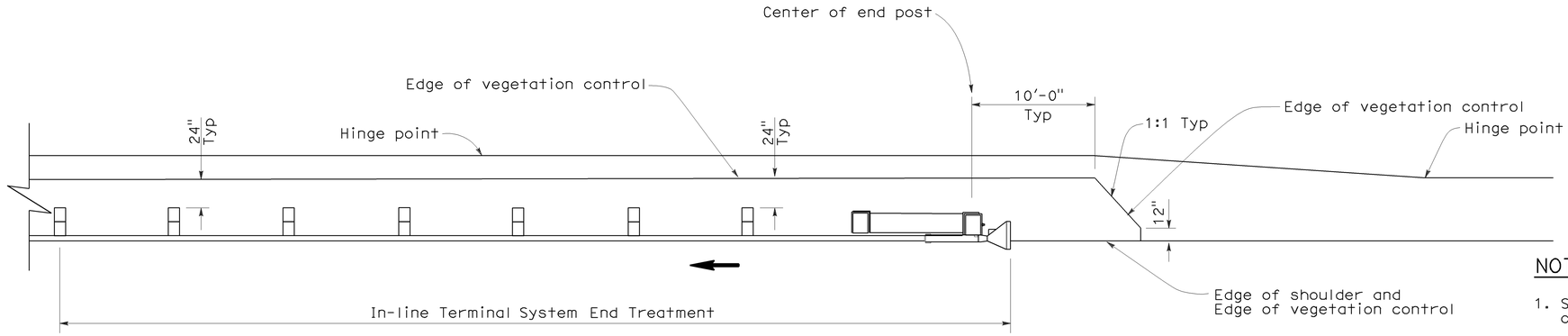

PLAN

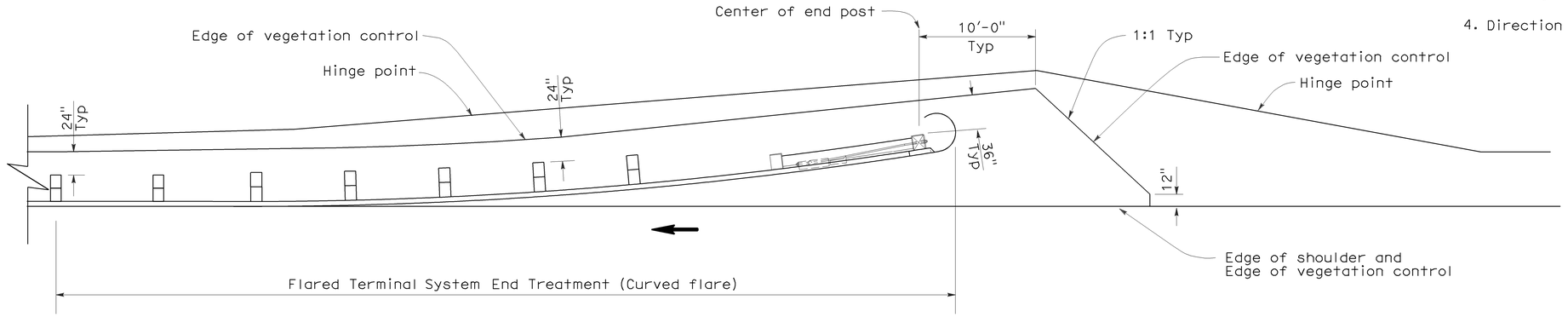

PLAN

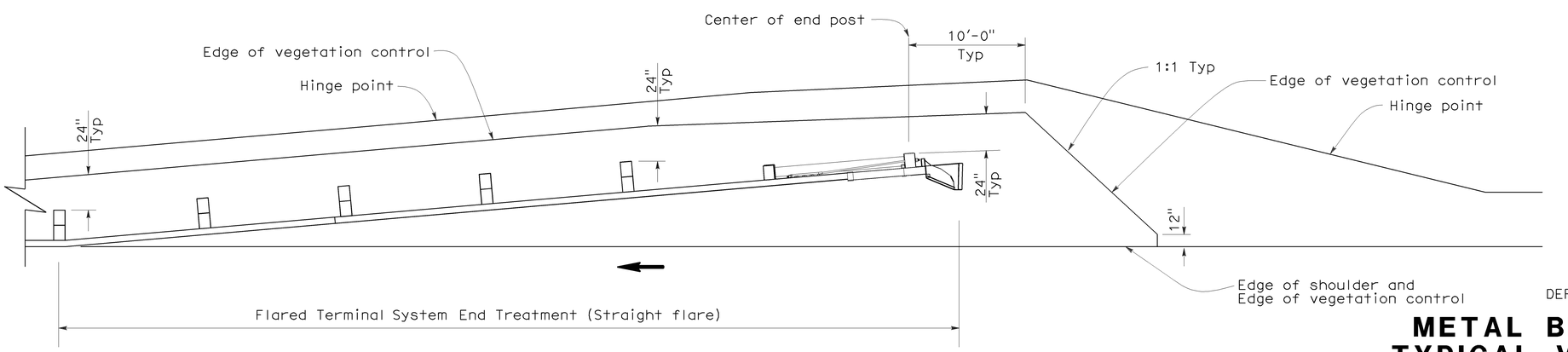

PLAN

NOTES:

1. See New Standard Plan NSP A77C5 for additional vegetation control details.
2. Where the distance between back of post and hinge point is less than 24", vegetation control to be constructed flush with the back edge of the post.
3. Where dike is constructed under railing, construct vegetation control to back edge of dike. Where paved shoulder is constructed within 24" in front of the post, construct vegetation control to the edge of paved shoulder.
4. Direction of adjacent traffic indicated by ←.

STATE OF CALIFORNIA
DEPARTMENT OF TRANSPORTATION

METAL BEAM GUARD RAILING
TYPICAL VEGETATION CONTROL
FOR TERMINAL SYSTEM END TREATMENTS

NO SCALE

NSP A77C6 DATED OCTOBER 20, 2006 SUPPLEMENTS THE STANDARD PLANS BOOK DATED MAY 2006.

NEW STANDARD PLAN NSP A77C6

2006 NEW STANDARD PLAN NSP A77C6

7-17-06

DIST	COUNTY	ROUTE	POST MILES TOTAL PROJECT	SHEET NO.	TOTAL SHEETS
12	Ora	57	16.2/18.6	691	960

Randell D. Hiatt
REGISTERED CIVIL ENGINEER

October 20, 2006
PLANS APPROVAL DATE

REGISTERED PROFESSIONAL ENGINEER
Randell D. Hiatt
No. C50200
Exp. 6-30-07
CIVIL
STATE OF CALIFORNIA

The State of California or its officers or agents shall not be responsible for the accuracy or completeness of electronic copies of this plan sheet.

To accompany plans dated 12-14-09

NOTES:

1. See New Standard Plan NSP A77C5 for additional vegetation control details.
2. Where the distance between back of post and hinge point is less than 24", vegetation control to be constructed flush with the back edge of the post.
3. Where dike is constructed under railing, construct vegetation control to back edge of dike. Where paved shoulder is constructed within 24" in front of the post, construct vegetation control to the edge of paved shoulder.
4. Direction of adjacent traffic indicated by ←.

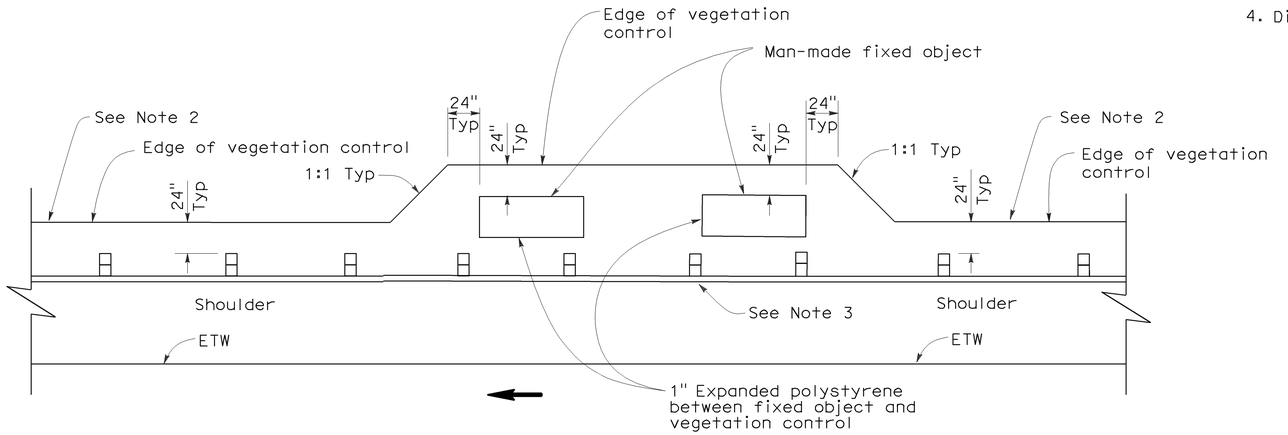

PLAN

FIXED OBJECT(S) ON SHOULDER

STATE OF CALIFORNIA
DEPARTMENT OF TRANSPORTATION

METAL BEAM GUARD RAILING
TYPICAL VEGETATION CONTROL AT FIXED OBJECT

NO SCALE

NSP A77C8 DATED OCTOBER 20, 2006 SUPPLEMENTS THE STANDARD PLANS BOOK DATED MAY 2006.

NEW STANDARD PLAN NSP A77C8

2006 NEW STANDARD PLAN NSP A77C8

7-17-06

DIST	COUNTY	ROUTE	POST MILES TOTAL PROJECT	SHEET NO.	TOTAL SHEETS
12	Ora	57	16.2/18.6	692	960

Randell D. Hiatt
REGISTERED CIVIL ENGINEER

June 6, 2008
PLANS APPROVAL DATE

REGISTERED PROFESSIONAL ENGINEER — Randell D. Hiatt — No. C50200 — Exp. 6-30-09 — CIVIL — STATE OF CALIFORNIA

The State of California or its officers or agents shall not be responsible for the accuracy or completeness of electronic copies of this plan sheet.

To accompany plans dated 12-14-09

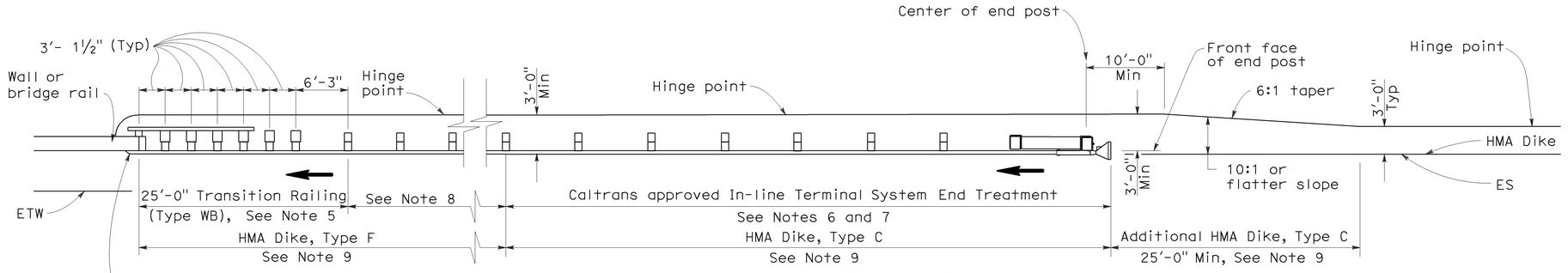

TYPE 12A LAYOUT

(GUARD RAILING INSTALLATION AT STRUCTURE APPROACH WITH AN IN-LINE END TREATMENT AT TRAFFIC APPROACH END OF RAILING)
See Notes 10

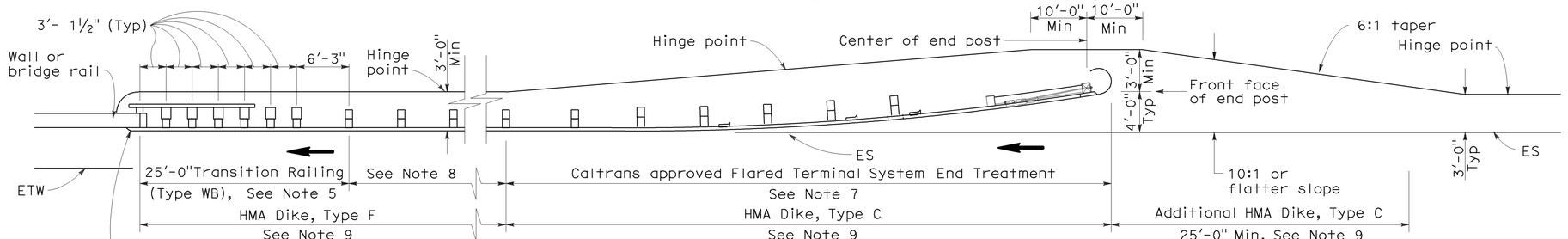

TYPE 12B LAYOUT

(GUARD RAILING INSTALLATION AT STRUCTURE APPROACH WITH A FLARED END TREATMENT AT TRAFFIC APPROACH END OF RAILING)
See Notes 10

NOTES:

1. Line post, blocks and hardware to be used are shown on Standard Plans A77A1, A77A2, A77B1, A77C1 and A77C2.
2. Guard rail post spacing to be 6'-3" center to center, except as otherwise noted.
3. Except as noted, line posts are 6" x 8" x 6'-0" wood with 6" x 8" x 1'-2" wood blocks. W6 x 9 steel posts, 6'-0" in length, with 6" x 8" x 1'-2" notched wood blocks or plastic blocks may be used for 6" x 8" x 6'-0" wood posts with 6" x 8" x 1'-2" wood blocks where applicable and when specified.
4. Direction of adjacent traffic indicated by →.
5. For Transition Railing (Type WB) details for Types 12A and 12B Layouts, see Standard Plan A77J4.
6. In-line Terminal System End Treatments are used where site conditions will not accommodate a flared end treatment.
7. The type of terminal system end treatment to be used will be shown on the Project Plans.
8. Dependent on site conditions (embankment height, side slopes, or other fixed objects), it may be advisable to construct additional guard railing (a length equal to multiples of 12'-6" with 6'-3" post spacing) between the transition railing and end treatment.
9. Where placement of dike is required with guard railing installations, see Revised Standard Plan RSP A77C4 for dike positioning details.
10. Type 12A or Type 12B Layouts are typically used:
    a. To the right of approaching traffic, at the end of a structure, on two-lane conventional highway where the roadbed width across the structure is less than 40 feet.
    b. To the left of approaching traffic, at the end of a structure, on two-lane conventional highway where the roadbed width across the structure is less than 40 feet.
    c. To the right of approaching traffic at the end of each structure on multilane freeways or expressways with separate adjacent or parallel bridges.
    d. To the right of approaching traffic at the end of the structure on multilane freeways or expressways with decked median on the bridge.
11. See Revised Standard Plan RSP A77F3 for typical layout used left of approaching traffic at the ends of each structure on multilane freeways or expressways with separate adjacent or parallel bridges.
12. For additional details of typical connections to bridge rail, see Connection Detail AA on Revised Standard Plans RSP A77J1 and RSP A77J2 and Connection Detail FF on Standard Plans A77K1 and A77K2.
13. For additional details of a typical connection to walls or abutments, see Standard Plan A77J3.

STATE OF CALIFORNIA
DEPARTMENT OF TRANSPORTATION

METAL BEAM GUARD RAILING TYPICAL LAYOUTS FOR STRUCTURE APPROACH

NO SCALE

RSP A77F1 DATED JUNE 6, 2008 SUPERSEDES STANDARD PLAN A77F1
DATED MAY 1, 2006 - PAGE 54 OF THE STANDARD PLANS BOOK DATED MAY 2006.

REVISED STANDARD PLAN RSP A77F1

2006 REVISED STANDARD PLAN RSP A77F1

12-10-07

DIST	COUNTY	ROUTE	POST MILES TOTAL PROJECT	SHEET NO.	TOTAL SHEETS
12	Ora	57	16.2/18.6	693	960

Randell D. Hiatt
REGISTERED CIVIL ENGINEER

June 6, 2008
PLANS APPROVAL DATE

Randell D. Hiatt
No. C50200
Exp. 6-30-09
CIVIL
REGISTERED PROFESSIONAL ENGINEER
STATE OF CALIFORNIA

The State of California or its officers or agents shall not be responsible for the accuracy or completeness of electronic copies of this plan sheet.

To accompany plans dated 12-14-09

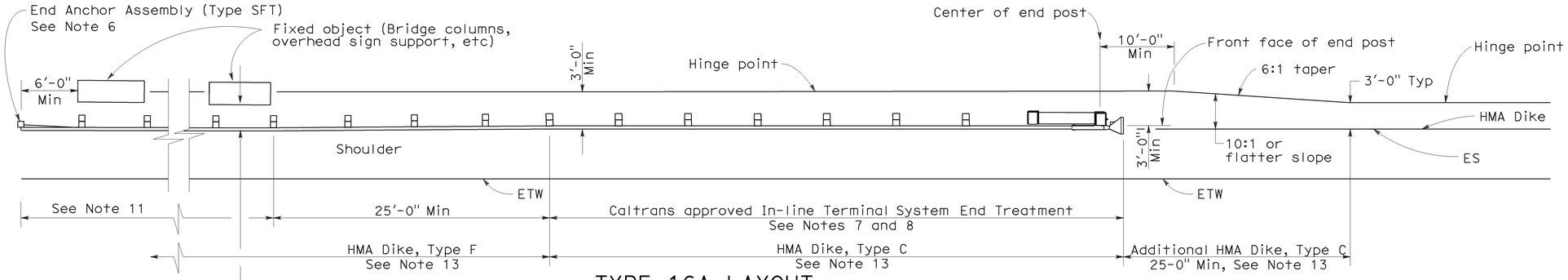

TYPE 16A LAYOUT

(GUARD RAILING INSTALLATION AT ROADSIDE FIXED OBJECT OR OBJECTS WITH AN IN-LINE END TREATMENT AT TRAFFIC APPROACH END OF RAILING)
See Notes 12 and 13

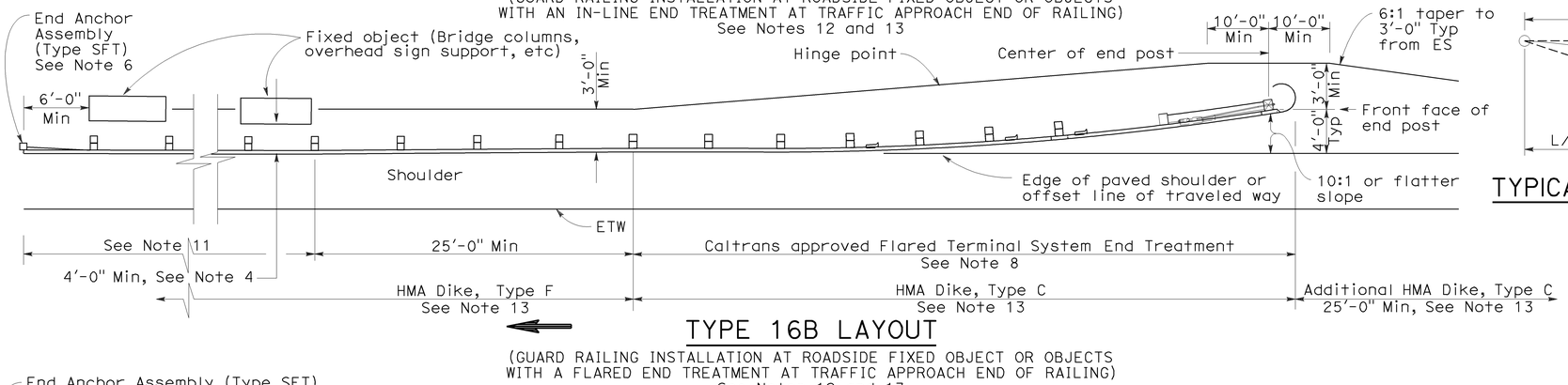

TYPE 16B LAYOUT

(GUARD RAILING INSTALLATION AT ROADSIDE FIXED OBJECT OR OBJECTS WITH A FLARED END TREATMENT AT TRAFFIC APPROACH END OF RAILING)
See Notes 12 and 13

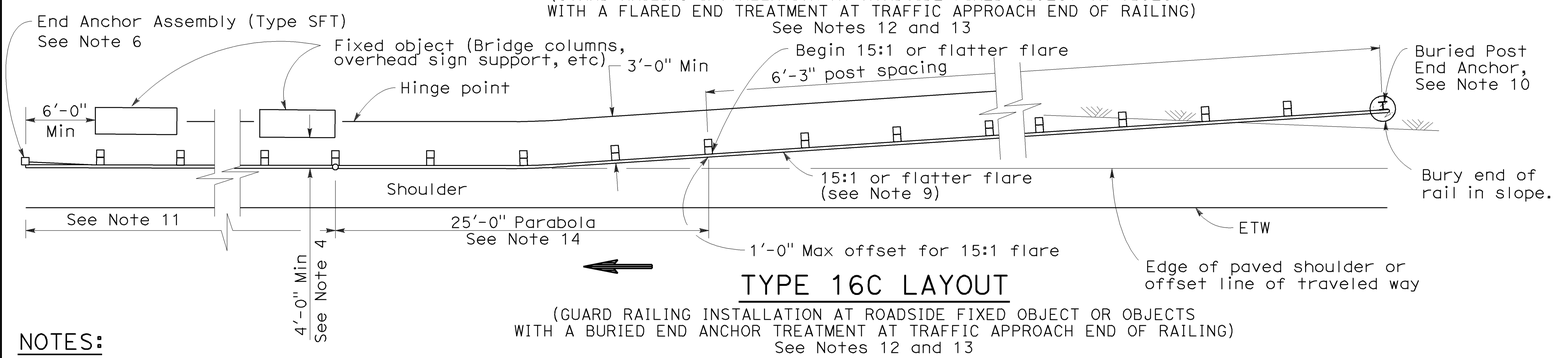

TYPE 16C LAYOUT

(GUARD RAILING INSTALLATION AT ROADSIDE FIXED OBJECT OR OBJECTS WITH A BURIED END ANCHOR TREATMENT AT TRAFFIC APPROACH END OF RAILING)
See Notes 12 and 13

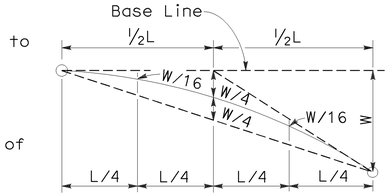

TYPICAL PARABOLIC LAYOUT

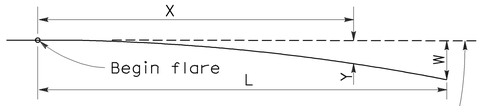

$$Y = \frac{WX^2}{L^2}$$

Y = Offset from base line
W = Maximum offset
X = Distance along base line
L = Length of flare

PARABOLIC FLARE OFFSETS

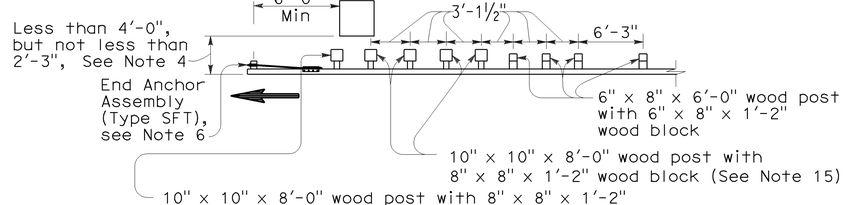

NOTE A: For a series of fixed objects (bridge columns, overhead sign supports, etc.) additional 10" x 10" x 8'-0" wood post with 8" x 8" x 1'-2" wood blocks at 3'-1½" center to center spacing are to be used between fixed objects.

STRENGTHENED RAILING SECTIONS FOR FIXED OBJECT

Use strengthened railing sections with Types 16A, 16B or 16C Layouts where minimum clearance between the face of the guard railing and fixed object(s) is less than 4'-0", but not less than 2'-3". See Note 4

NOTES:

1. Line post, blocks and hardware to be used are shown on Revised Standard Plans A77A1, A77A2, A77B1, A77C1 and A77C2.
2. Guard railing post spacing to be 6'-3" center to center, except as otherwise noted.
3. Except as noted, line posts are 6" x 8" x 6'-0" wood with 6" x 8" x 1'-2" wood blocks. W6 x 9 steel posts, 6'-0" in length, with 6" x 8" x 1'-2" notched wood blocks or notched recycled plastic blocks may be used for 6" x 8" x 6'-0" wood line posts with 6" x 8" x 1'-2" wood blocks where applicable and when specified.
4. A 4'-0" minimum clearance is required between the face of the railing and the face of a fixed object located directly behind standard guard railing sections with post spacing of 6'-3". Construct guard railing as shown in the detail "Strengthened Railing Sections for Fixed Objects" on this plan, where the clearance between the face of the railing and the face of a fixed object is less than 4'-0", but not less than 2'-3". Where the clearance is less than 2'-3", a concrete wall or barrier should be constructed to shield the fixed object(s).
5. Direction of adjacent traffic indicated by ➔.
6. For End Anchor Assembly (Type SFT) details, see Standard Plan A77H1.
7. In-line Terminal System End Treatments are used where site conditions will not accommodate a flared end treatment.
8. The type of terminal system to be used will be shown on the Project Plans.
9. The 15:1 or flatter flare used with Type 16C Layout is based on the edge of the paved shoulder or offset line of edge of the traveled way. The length of guard railing within the 15:1 or flatter flare is based on site conditions and should be a length equal to multiples of 12'-6".
10. For details of the Buried Post End Anchor used with Type 16C Layout, see Standard Plan A77I2.
11. As site conditions dictate, construct additional guard railing to shield fixed object(s). Additional guard railing length equal to multiples of 12'-6". Post spacing at 6'-3" except as specified in Note 4.
12. Layout Types 16A, 16B or 16C are typically used where guard railing is recommended to shield roadside fixed object(s) and a crashworthy end treatment is required for only one direction of traffic.
13. Where placement of dike is required with guard railing, see Revised Standard Plan RSP A77C4 for dike positioning details.
14. For typical flare offsets for 25'-0" length parabola with maximum offset of 1'-0", see Revised Standard Plan RSP A77E1.
15. W6 x 15 steel post, 8'-0" in length, with 8" x 8" x 1'-2" notched wood block or notched recycled plastic blocks may be used in place of the 10" x 10" x 8'-0" wood post with 8" x 8" x 1'-2" wood block shown in the "Strengthened Railing Sections Detail".

STATE OF CALIFORNIA
DEPARTMENT OF TRANSPORTATION

METAL BEAM GUARD RAILING TYPICAL LAYOUTS FOR ROADSIDE FIXED OBJECTS

NO SCALE

RSP A77G3 DATED JUNE 6, 2008 SUPERSEDES STANDARD PLAN A77G3 DATED MAY 1, 2006 - PAGE 61 OF THE STANDARD PLANS BOOK DATED MAY 2006.

REVISED STANDARD PLAN RSP A77G3

2006 REVISED STANDARD PLAN RSP A77G3

12-10-07

DIST	COUNTY	ROUTE	POST MILES TOTAL PROJECT	SHEET NO.	TOTAL SHEETS
12	Ora	57	16.2/18.6	694	960

Randell D. Hiatt
REGISTERED CIVIL ENGINEER

June 5, 2009
PLANS APPROVAL DATE

Registered Professional Engineer — Randell D. Hiatt — No. C50200 — Exp. 6-30-09 CIVIL — State of California

The State of California or its officers or agents shall not be responsible for the accuracy or completeness of electronic copies of this plan sheet.

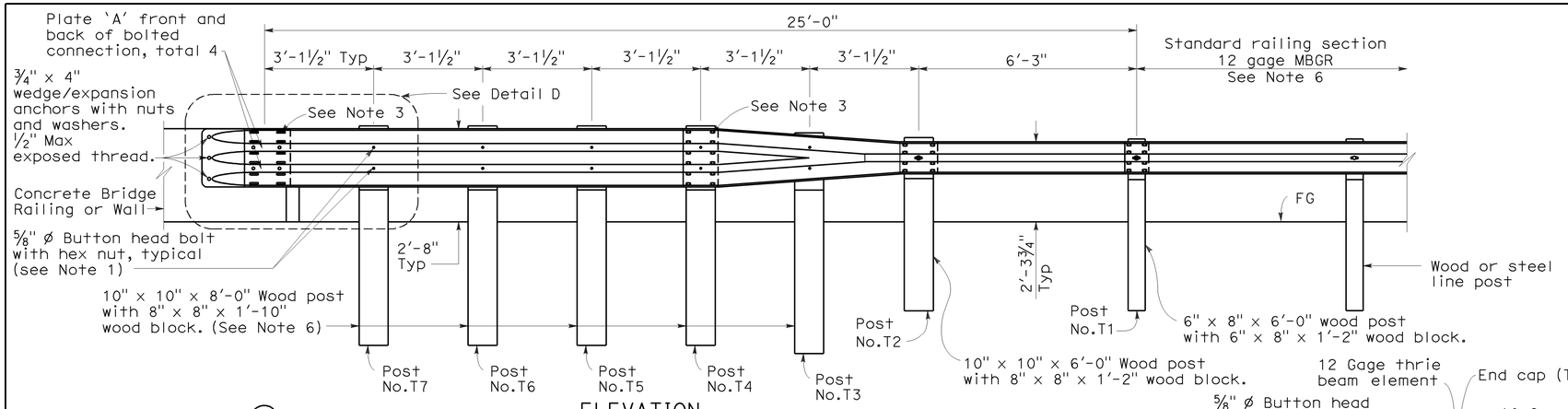

ELEVATION

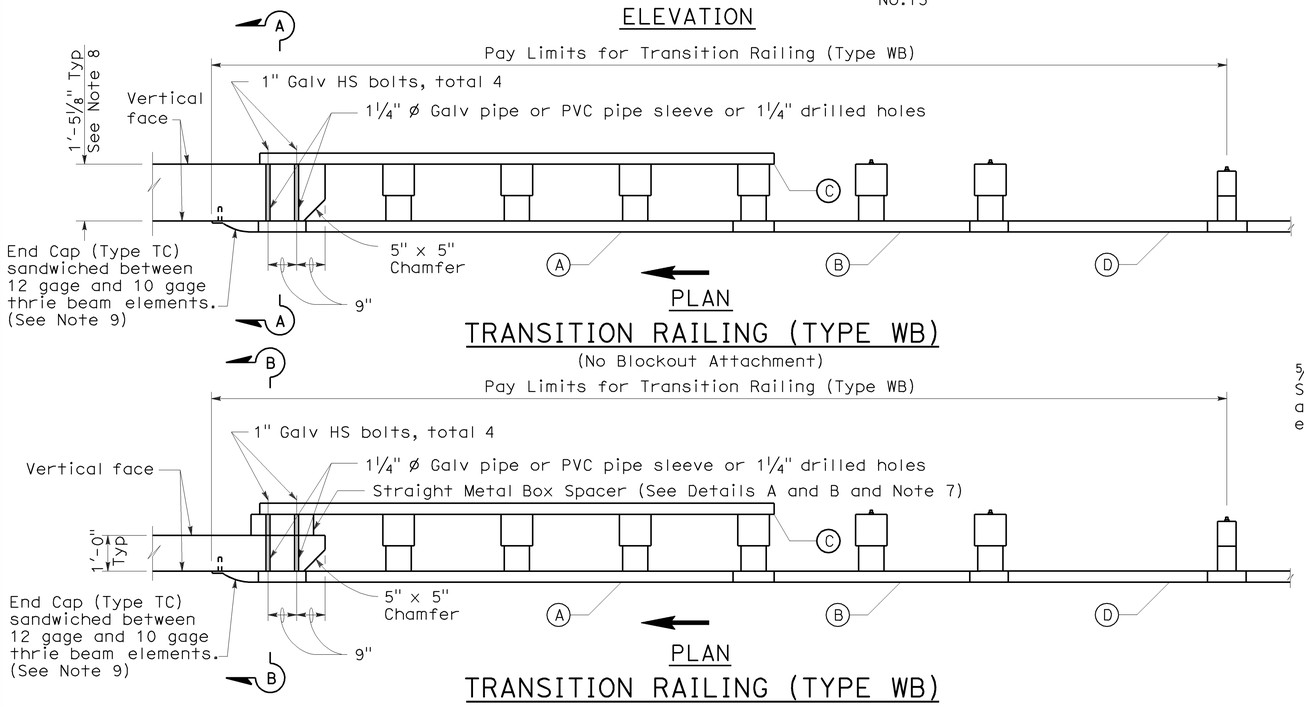

TRANSITION RAILING (TYPE WB)
(No Blockout Attachment)

TRANSITION RAILING (TYPE WB)
(Blockout Attachment)

LEGEND

- (A) Nested thrie beam elements (one 12 gage element nested over one 10 gage element).
- (B) One 10 gage "W" beam to thrie beam element.
- (C) One 12 gage thrie beam element.
- (D) One 10 gage "W" beam rail element (7'-3½" length)

10 gage = 0.135" thick

12 gage = 0.108" thick

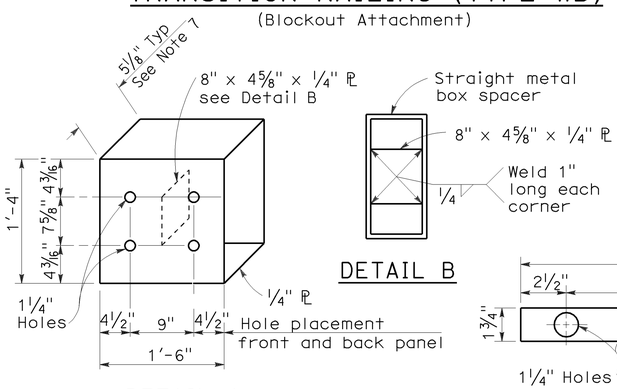

STRAIGHT METAL BOX SPACER

PLATE 'A'

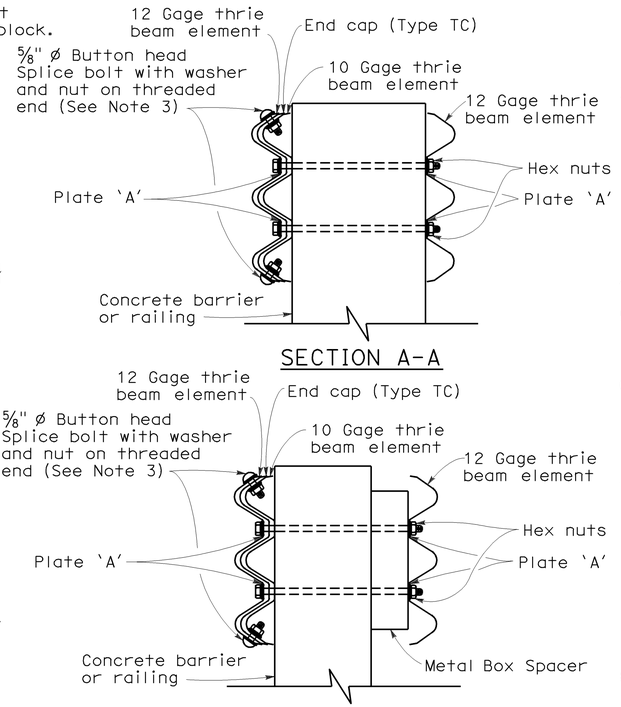

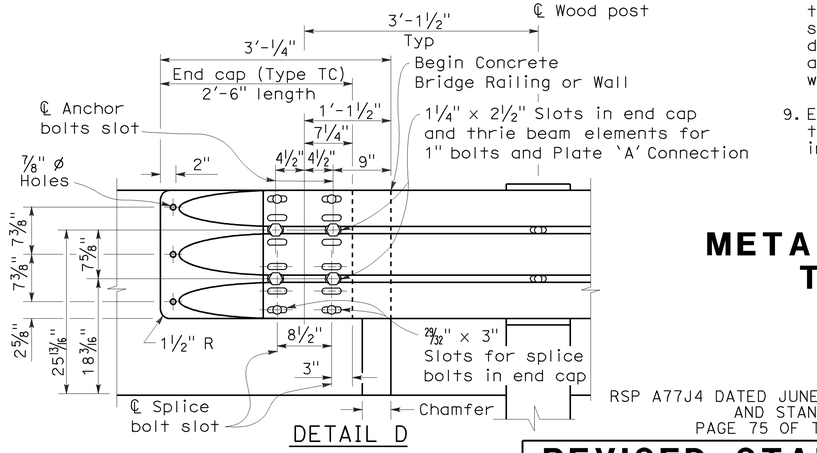

NOTES:

To accompany plans dated 12-14-09

1. Use 5/8 " ø Button head bolts and hex nuts for connections to posts. No washer on rail face for bolted connections to post.
2. The nested rail elements, end cap, and 'W' beam to thrie beam element may be spliced together prior to bolting the elements to the wood post and concrete barrier or railing.
3. Exterior splice bolt holes for rail element splices at Post No.T4 and the connection to the concrete barrier or railing shall be the standard 29/32 " x 1 1/8 " slot size. Interior splice bolt holes at these locations may be increased up to 1 1/4 " ø. Only the top 2 and the bottom 2 splice bolts with washers and nuts are required for rail splices at Post No.T4 and the connection to the concrete barrier or railing.
4. Direction of adjacent traffic indicated by →.
5. The top elevation of Post Nos.T2 through T7 shall not project more than 1" above the top elevation of the rail element.
6. Typically, the railing connected to Transition Railing (Type WB) will be either standard railing section of metal beam guard railing or an approved Caltrans end treatment attached to Post No.T1.
7. The depth of the metal box spacer varies from the 5 1/8 " to 1 1/2 " and is dependent on the width of the concrete railing or wall. The combined dimension for the depth of the metal box spacer plus the width of railing or wall is typically 17 1/8 ". Where the space between the backside of the concrete railing or wall and the rear thrie beam element is less than 1 1/2 ", metal plates similar to Plate 'A' are to be used as spacers.
8. Where the width of the concrete railing or wall is greater than 17 1/8 ", wood blocks are to be used to fill the space created between the backside of Posts No.4 through No.7 and the rear thrie beam element. These wood blocks shall be 8" in width and 1'-2" in length. The dimension between the front thrie beam element and the rear thrie beam element is to match the width of the concrete railing or wall.
9. End cap may be installed over 12 gage and 10 gage thrie beam elements where transition railing is installed on the departure end of bridge railing.

STATE OF CALIFORNIA
DEPARTMENT OF TRANSPORTATION

METAL BEAM GUARD RAILING TRANSITION RAILING (TYPE WB)

NO SCALE

RSP A77J4 DATED JUNE 5, 2009 SUPERSEDES RSP A77J4 DATED JUNE 6, 2008 AND STANDARD PLAN A77J4 DATED MAY 1, 2006 - PAGE 75 OF THE STANDARD PLANS BOOK DATED MAY 2006.

REVISED STANDARD PLAN RSP A77J4

2006 REVISED STANDARD PLAN RSP A77J4

5-14-09

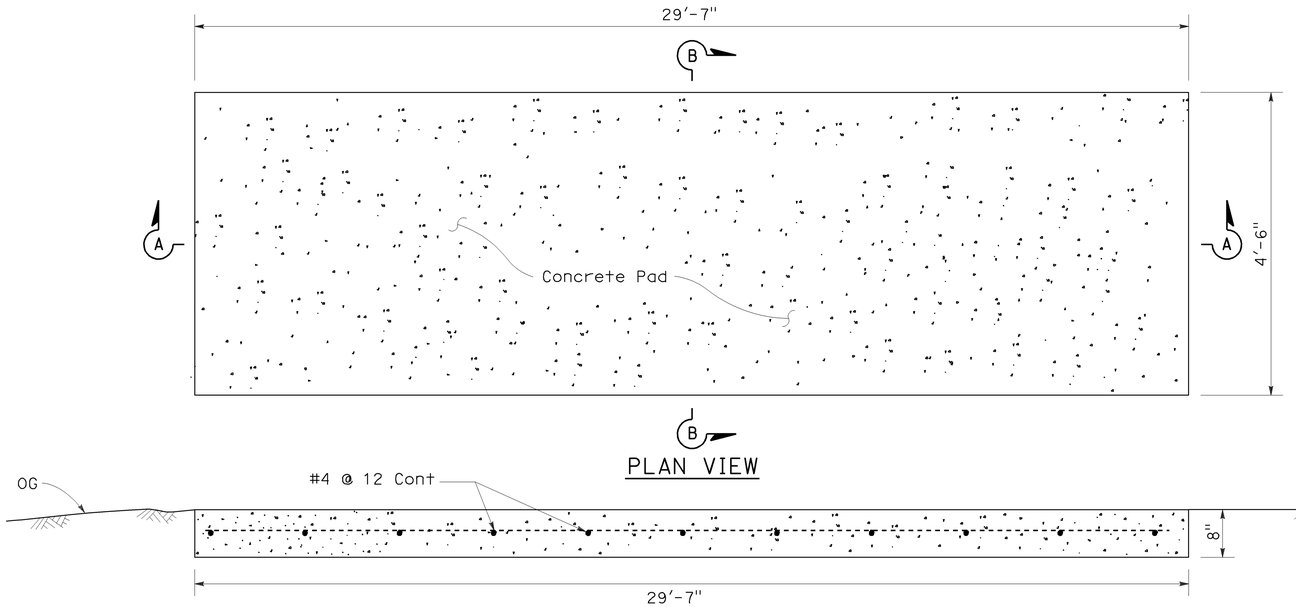

SECTION A-A

CONCRETE ANCHOR SLAB

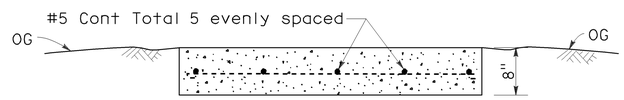

SECTION B-B

DIST	COUNTY	ROUTE	POST MILES TOTAL PROJECT	SHEET NO.	TOTAL SHEETS
12	Ora	57	16.2/18.6	695	960

Randell D. Hiatt
REGISTERED CIVIL ENGINEER

June 6, 2008
PLANS APPROVAL DATE

REGISTERED PROFESSIONAL ENGINEER
Randell D. Hiatt
No. C50200
Exp. 6-30-09
CIVIL
STATE OF CALIFORNIA

The State of California or its officers or agents shall not be responsible for the accuracy or completeness of electronic copies of this plan sheet.

To accompany plans dated 12-14-09

NOTES:

1. For additional details of this crash cushion, refer to manufacturer's installation instructions.
2. For details of the REACT Crash Cushion with self contained backup support (no concrete backup block), see Standard Plan A82D1.
3. The base track frame with cylinders attached comes from the manufacturer as a completely pre-assembled unit.
4. Place the crash cushion unit on the cured concrete anchor slab and use the base track frame of the crash cushion as a template for drilling anchor bolt holes. Drill holes in slab and attach crash cushion with wedge anchor bolts supplied by the manufacturer.
5. Attach last cylinder to concrete backup block with manufacturer supplied fastener in such manner as recommended by the manufacturer.
6. Attach the manufacturer supplied side cable anchor plates to the cured concrete backup block with the manufacturer supplied bolts in such manner as recommended by the manufacturer.
7. Place manufacturer supplied cover over cylinders and attach cover to cylinders with manufacturer supplied fasteners.

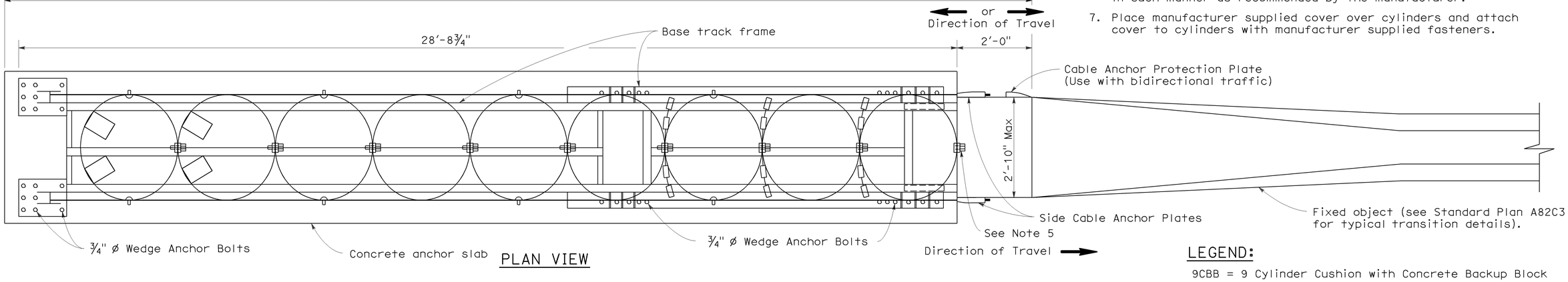

PLAN VIEW

LEGEND:

9CBB = 9 Cylinder Cushion with Concrete Backup Block

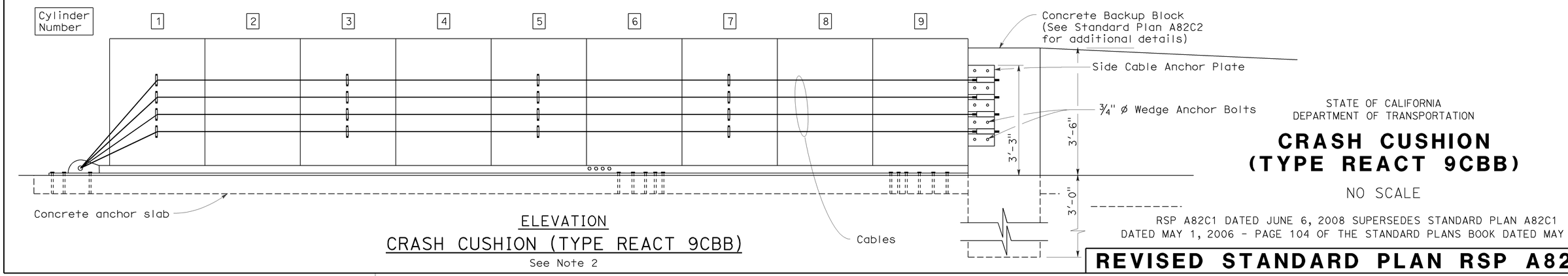

ELEVATION

CRASH CUSHION (TYPE REACT 9CBB)

See Note 2

STATE OF CALIFORNIA
DEPARTMENT OF TRANSPORTATION

CRASH CUSHION (TYPE REACT 9CBB)

NO SCALE

RSP A82C1 DATED JUNE 6, 2008 SUPERSEDES STANDARD PLAN A82C1
DATED MAY 1, 2006 - PAGE 104 OF THE STANDARD PLANS BOOK DATED MAY 2006.

REVISED STANDARD PLAN RSP A82C1

2006 REVISED STANDARD PLAN RSP A82C1

4-21-08

DIST	COUNTY	ROUTE	POST MILES TOTAL PROJECT	SHEET NO.	TOTAL SHEETS
12	Ora	57	16.2/18.6	696	960

Randell D. Hiatt
REGISTERED CIVIL ENGINEER

October 20, 2006
PLANS APPROVAL DATE

REGISTERED PROFESSIONAL ENGINEER
Randell D. Hiatt
No. C50200
Exp. 6-30-07
CIVIL
STATE OF CALIFORNIA

The State of California or its officers or agents shall not be responsible for the accuracy or completeness of electronic copies of this plan sheet.

To accompany plans dated 12-14-09

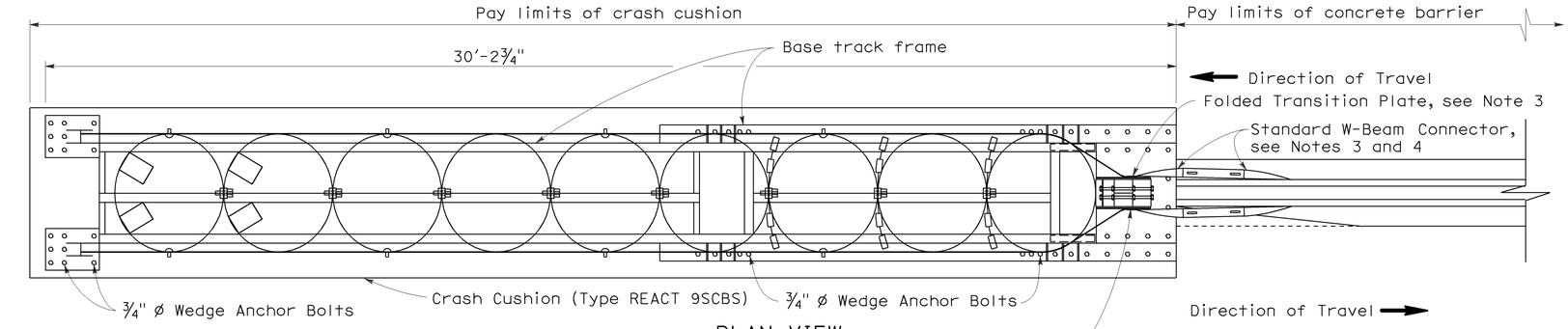

PLAN VIEW

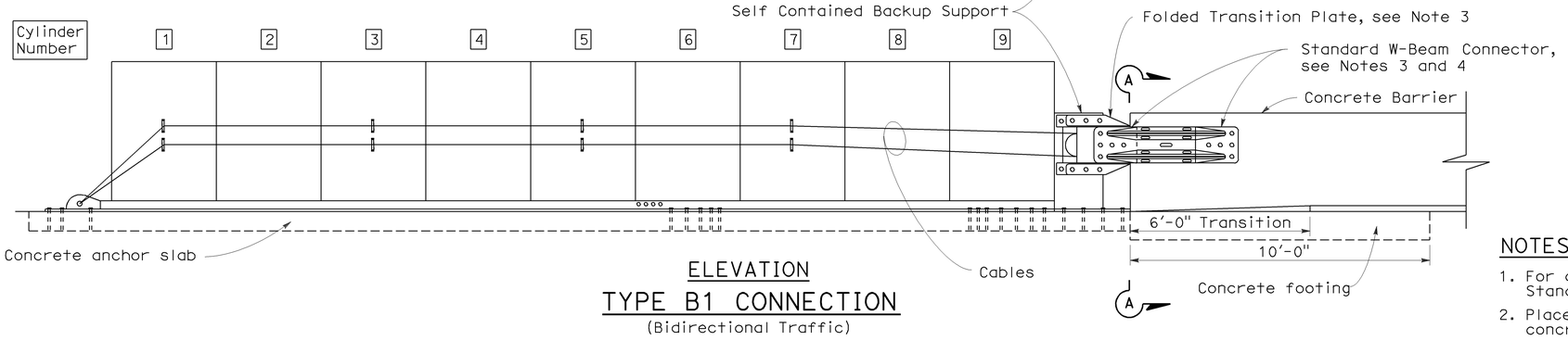

ELEVATION

TYPE B1 CONNECTION

(Bidirectional Traffic)

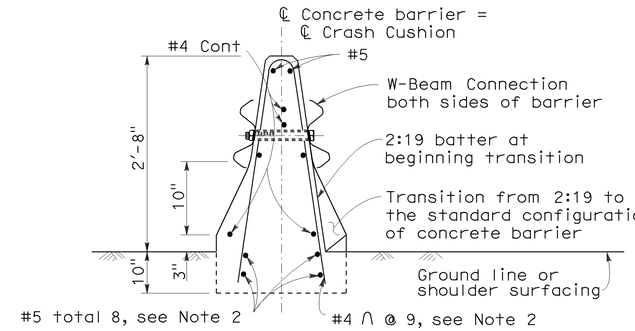

SECTION A-A

(Type 50 Barrier shown)

NOTES:

1. For additional details of Crash Cushion (Type REACT 9SCBS), see Standard Plan A82D1.
2. Place this reinforcement for the full 10'-0" length of the terminus of the concrete barrier.
3. Attach manufacturer supplied folded transition plates and W-Beam connectors to backup support with manufacturer supplied bolts.
4. Attach W-Beam Connectors to barrier with manufacturer supplied anchor bolts in the manner recommended by the manufacturer.

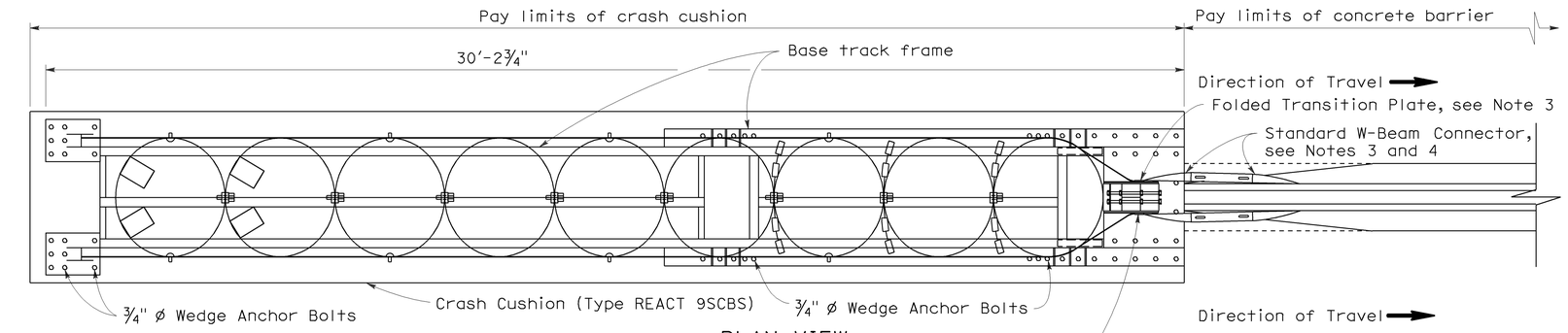

PLAN VIEW

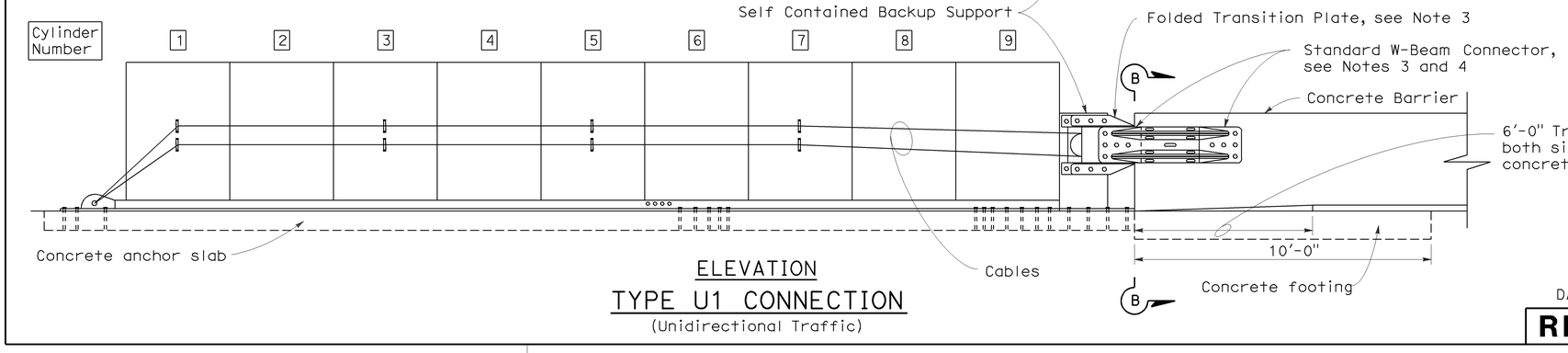

ELEVATION

TYPE U1 CONNECTION

(Unidirectional Traffic)

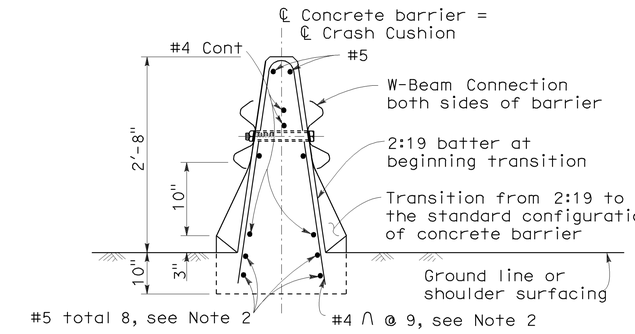

SECTION B-B

(Type 50 Barrier shown)

STATE OF CALIFORNIA
DEPARTMENT OF TRANSPORTATION

CRASH CUSHION (TYPE REACT 9SCBS) CONNECTION TO CONCRETE BARRIER

NO SCALE

RSP A82D2 DATED OCTOBER 20, 2006 SUPERSEDES STANDARD PLAN A82D2 DATED MAY 1, 2006 - PAGE 108 OF THE STANDARD PLANS BOOK DATED MAY 2006.

REVISED STANDARD PLAN RSP A82D2

2006 REVISED STANDARD PLAN RSP A82D2

9-13-06

DIST	COUNTY	ROUTE	POST MILES TOTAL PROJECT	SHEET NO.	TOTAL SHEETS
12	Ora	57	16.2/18.6	697	960

REGISTERED CIVIL ENGINEER

June 5, 2009
PLANS APPROVAL DATE

REGISTERED PROFESSIONAL ENGINEER — Glenn DeCou — No. C34547 — Exp. 9-30-09 CIVIL — STATE OF CALIFORNIA

The State of California or its officers or agents shall not be responsible for the accuracy or completeness of electronic copies of this plan sheet.

To accompany plans dated 12-14-09

2006 REVISED STANDARD PLAN RSP A85

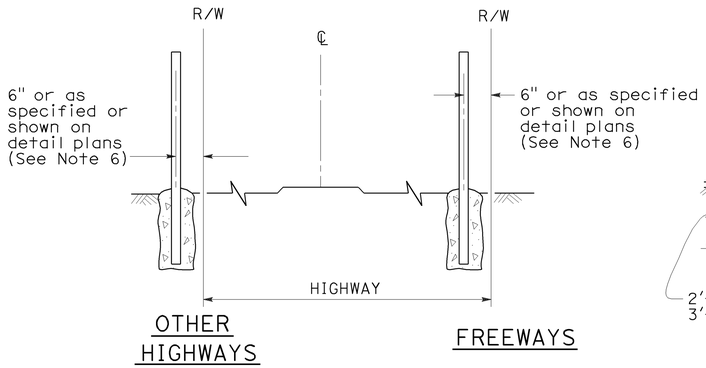

OTHER HIGHWAYS — FREEWAYS

FENCE LOCATION

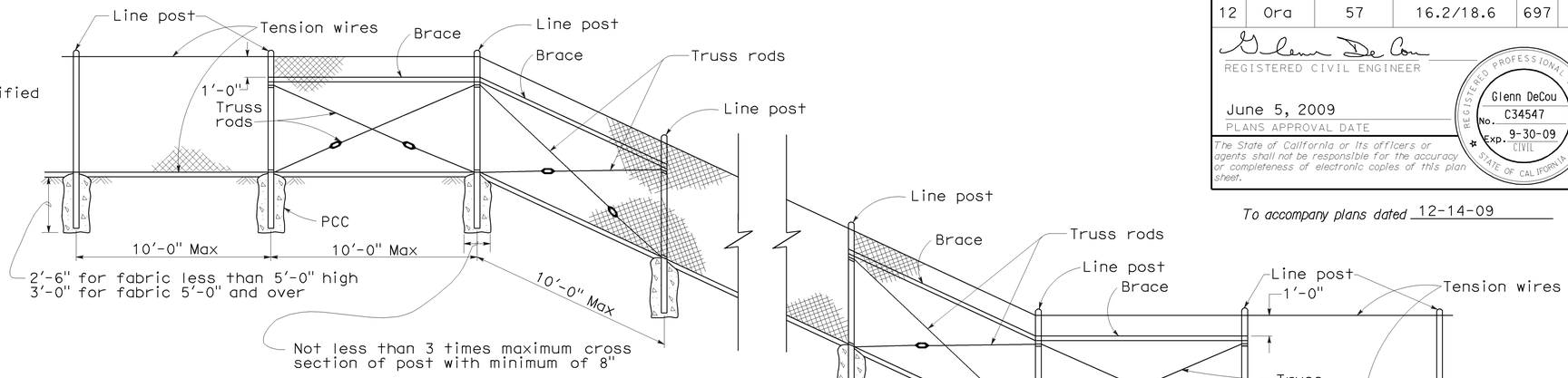

CHAIN LINK FENCE ON SHARP BREAK IN GRADE

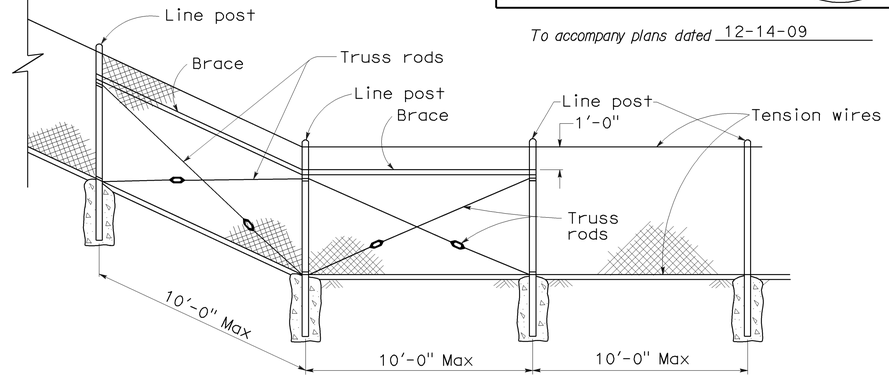

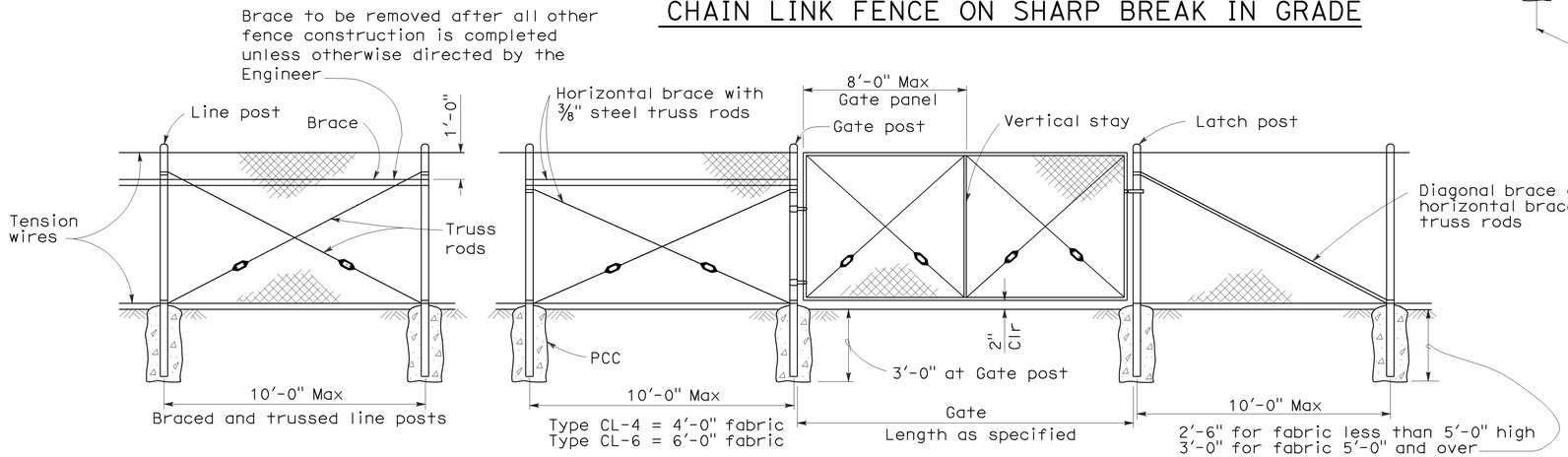

CHAIN LINK GATE INSTALLATION

NOTES:

1. The below table shows examples of post and brace sections which may comply with the Specifications.
2. Sections shown in the tables must also comply with the strength requirements and other provisions of the Specifications.
3. Other sections which comply with the strength requirements and other provisions of the Specifications may be used on approval of the Engineer.
4. Options exercised shall be uniform on any one project.
5. Dimensions shown are nominal.
6. Offset to be 2'-0" at monument locations, measured at right angles to R/W lines. Taper to achieve offset to be at least 20'-0" long.

GATE POST			
FENCE HEIGHT	GATE WIDTHS	NOMINAL ID	WEIGHT PER FOOT
6'-0" and Less	Up thru 6'-0"	2½"	4.95 LB
	Over 6'-0" thru 12'-0"	4"	10.79 LB
	Over 12'-0" thru 18'-0"	5"	14.62 LB
	Over 18'-0" to 24'-0" Max	6"	18.97 LB
Over 6'-0"	Up thru 6'-0"	3"	7.58 LB
	Over 6'-0" thru 12'-0"	5"	14.62 LB
	Over 12'-0" thru 18'-0"	6"	18.97 LB
	Over 18'-0" to 24'-0" Max	8"	28.55 LB

Above post dimensions and weights are minimums. Larger sizes may be used on approval of the Engineer.

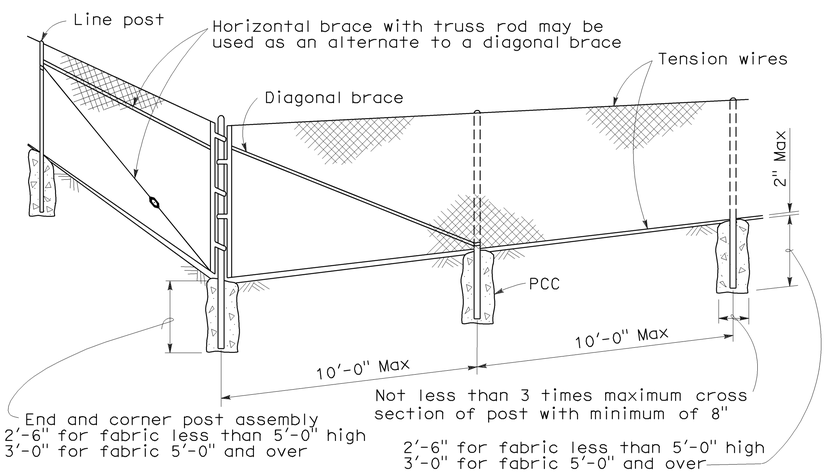

CORNER POST

TYPICAL MEMBER DIMENSIONS (See Notes)											
FENCE HEIGHT	LINE POSTS			END, LATCH & CORNER POSTS				BRACES			
	ROUND ID	H	ROLL FORMED	ROUND ID	ROLL FORMED			ROUND ID	H	ROLL FORMED	
					⌐	⌐⌐	[ ]			⌐⌐	[ ]
6' & less	1½"	1⅞" × 1⅝"	1⅞" × 1⅝"	2"	3½" × 3½"	2" × 1¾"		1¼"	1½" × 1⅝"	1⅝" × 1¼"	1¾" × 1¼"
Over 6'	2"	2¼" × 2"	2" × 1¾"	2½"	3½" × 3½"	2½" × 2½"		1¼"	1½" × 1⅝"	1⅝" × 1¼"	1¾" × 1¼"

STATE OF CALIFORNIA
DEPARTMENT OF TRANSPORTATION

CHAIN LINK FENCE

NO SCALE

RSP A85 DATED JUNE 5, 2009 SUPERSEDES STANDARD PLAN A85
DATED MAY 1, 2006 - PAGE 111 OF THE STANDARD PLANS BOOK DATED MAY 2006.

REVISED STANDARD PLAN RSP A85

5-7-09

DIST	COUNTY	ROUTE	POST MILES TOTAL PROJECT	SHEET NO.	TOTAL SHEETS
12	Ora	57	16.2/18.6	698	960

REGISTERED CIVIL ENGINEER

November 17, 2006
PLANS APPROVAL DATE

Michael Janzen No. 44788 Exp. 03-31-08 CIVIL — REGISTERED PROFESSIONAL ENGINEER — STATE OF CALIFORNIA

The State of California or its officers or agents shall not be responsible for the accuracy or completeness of electronic copies of this plan sheet.

To accompany plans dated 12-14-09

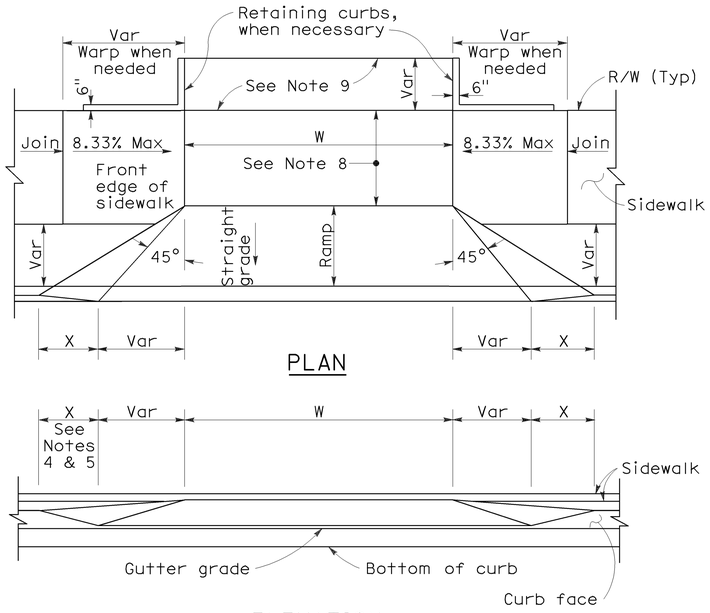

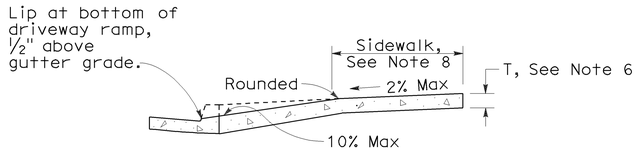

CASE A

Typical driveway, sidewalk not depressed

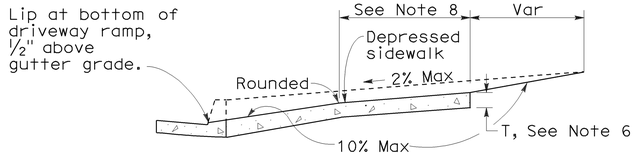

CASE B

Driveway with depressed sidewalk

SECTIONS

CURB QUANTITIES

TYPE	CUBIC YARDS PER LINEAR FOOT
A1-6	0.02585
A1-8	0.03084
A2-6	0.05903
A2-8	0.06379
A3-6	0.01036
A3-8	0.01435
B1-4	0.02185
B1-6	0.02930
B2-4	0.05515
B2-6	0.06171
B3-4	0.00641
B3-6	0.01074
B4	0.05709
D-4	0.04083
D-6	0.06804
E	0.06661

TABLE A

CURB TYPE	DIMENSIONS "H1"	"H2"	"W1"	"W2"
A1-6	1′-2"	6"	7½"	1½"
A1-8	1′-4"	8"	8"	2"
A2-6	1′-0"	6"	2′-7½"	1½"
A2-8	1′-2"	8"	2′-8"	2"
A3-6	6"	5"	7¼"	1¼"
A3-8	8"	7"	7¾"	1¾"
B1-4	1′-0"	4"	7½"	2½"
B1-6	1′-2"	6"	9"	4"
B2-4	10"	4"	2′-7½"	2½"
B2-6	1′-0"	6"	2′-9"	4"
B3-4	4"	3"	7"	2"
B3-6	6"	5"	8½"	3½"
D-4	10"	4"	1′-6"	1′-1"
D-6	1′-0"	6"	2′-2"	1′-8"

DRIVEWAYS

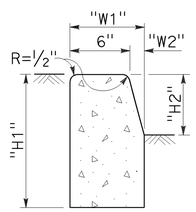

TYPE A1 CURBS

See Table A

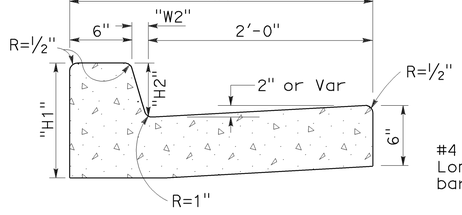

TYPE A2 CURBS

See Table A

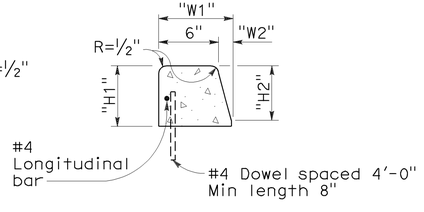

TYPE A3 CURBS

Superimposed on existing pavement
See Table A

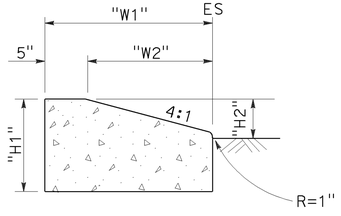

TYPE D CURBS

See Table A

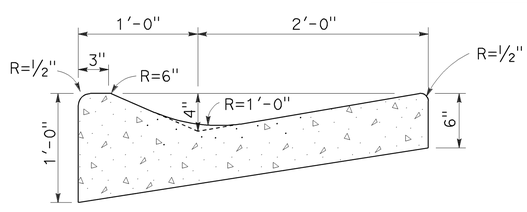

TYPE E CURB

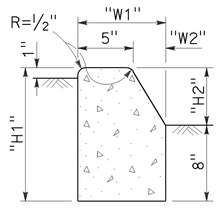

TYPE B1 CURBS

See Table A

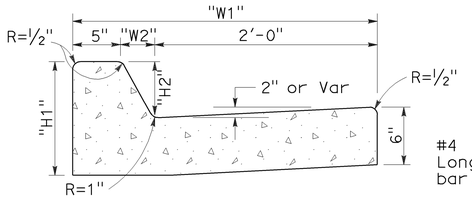

TYPE B2 CURBS

See Table A

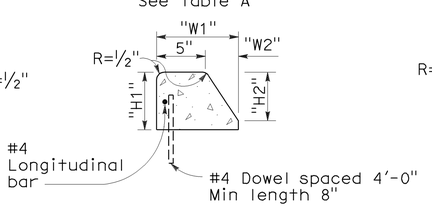

TYPE B3 CURBS

Superimposed on existing pavement
See Table A

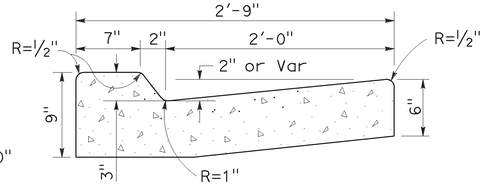

TYPE B4 CURBS

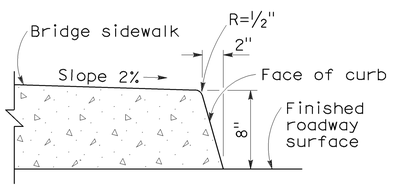

TYPE H CURB

On Bridges

NOTES:

1. Case A driveway section typically applies.
2. Use Case B driveway section when ramp slopes would exceed 10% in Case A.
3. Use Case B driveway section when sidewalk cross slope would exceed 2% in Case A.
4. X=3′-0" except for curb heights over 10" where 4:1 slopes shall be used on curb slope.

CURBS

5. X is a variable when sidewalk is located where wheelchairs may traverse the surface. Slopes shall not exceed 8.33%.
6. Sidewalk and ramp thickness "T" at driveway shall be 4" for residental and 6" for commercial.
7. Difference in slope of the driveway ramp and the slope of a line between the gutter and a point on the roadway 5′-0" from gutter line shall not exceed 15%. Reduce driveway ramp slope, not gutter slope, where required.
8. Minimum width of clear passageway for sidewalk shall be 4′-0".
9. Retaining curbs and acquisition of construction easement may be necessary for narrow sidewalks or curb heights in excess of 6".
10. Across the pedestrian route at curb ramp locations, the gutter pan slope shall not exceed 1" of depth for each 2′-0" of width.

STATE OF CALIFORNIA
DEPARTMENT OF TRANSPORTATION

CURBS AND DRIVEWAYS

NO SCALE

RSP A87A DATED NOVEMBER 17, 2006 SUPERSEDES STANDARD PLAN A87A
DATED MAY 1, 2006 - PAGE 113 OF THE STANDARD PLANS BOOK DATED MAY 2006.

REVISED STANDARD PLAN RSP A87A

2006 REVISED STANDARD PLAN RSP A87A

10-25-06

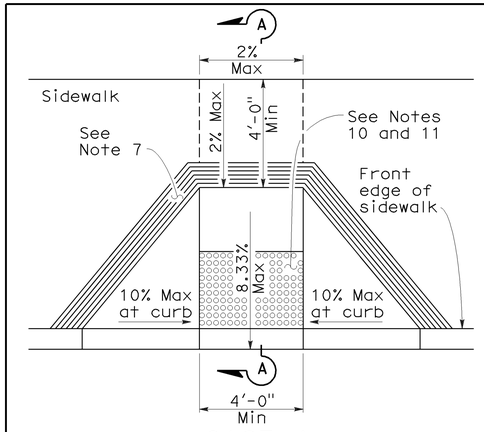

CASE A

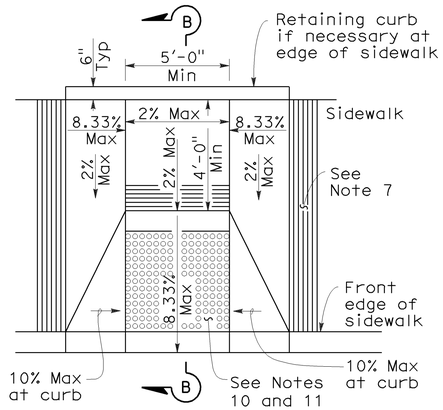

CASE B

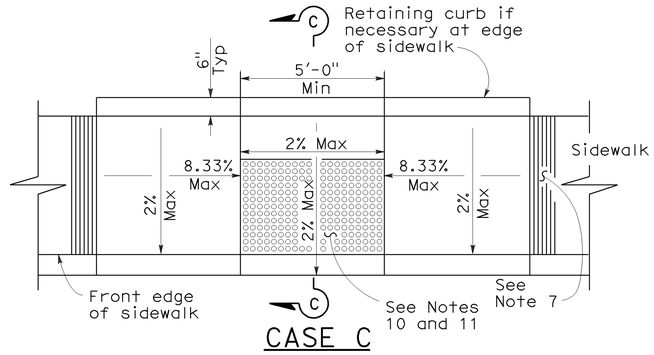

CASE C

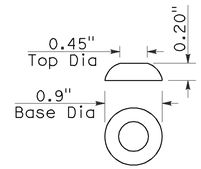

RAISED TRUNCATED DOME

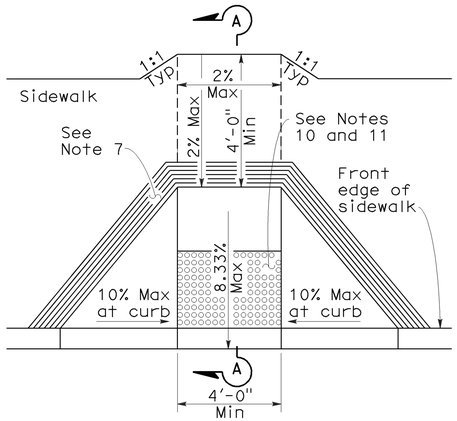

CASE D

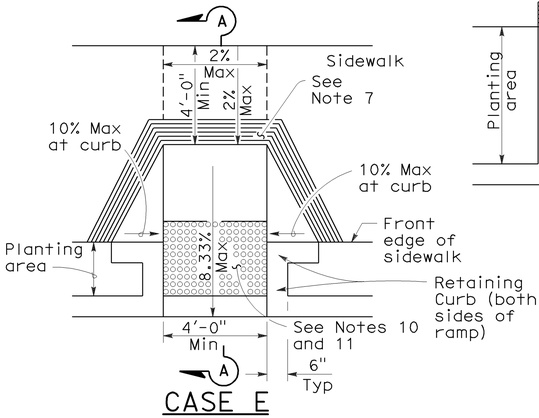

CASE E

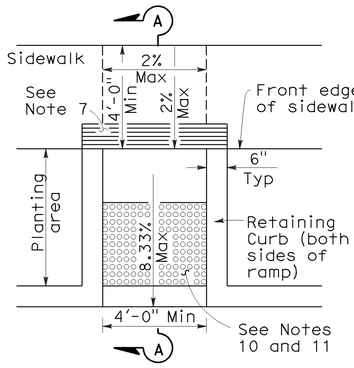

CASE F

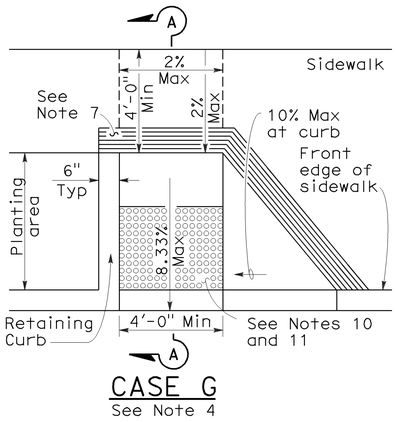

CASE G

See Note 4

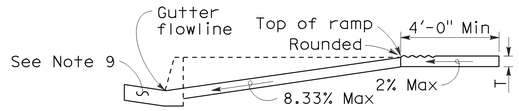

SECTION A-A

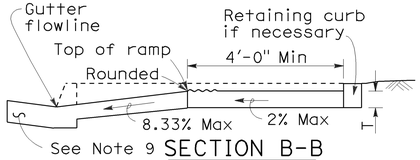

SECTION B-B

Depress entire sidewalk as required

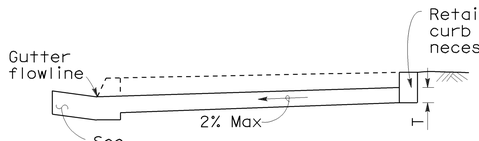

SECTION C-C

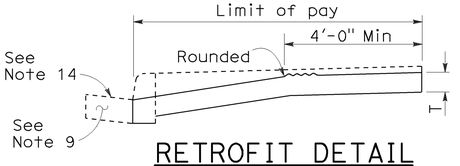

RETROFIT DETAIL

Existing curb and sidewalk

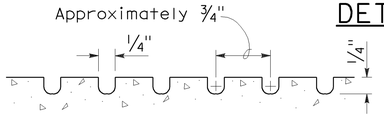

GROOVING DETAIL

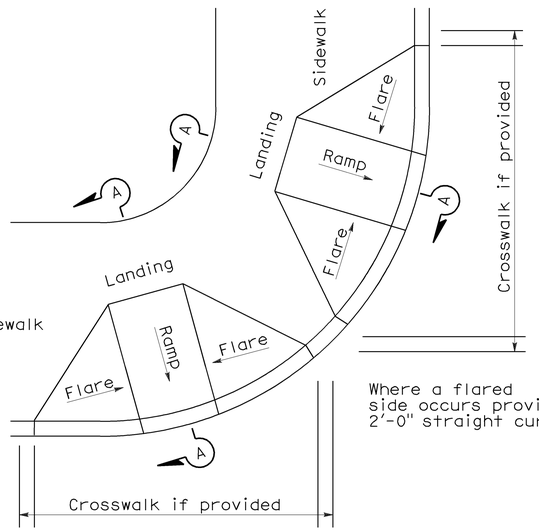

DETAIL A

TYPICAL TWO-RAMP CORNER INSTALLATION

See Note 1

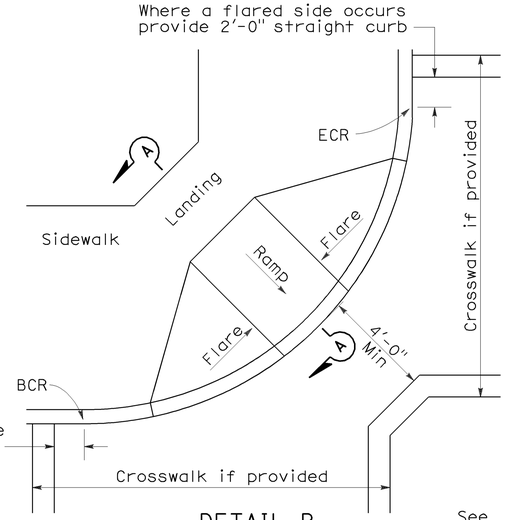

DETAIL B

TYPICAL ONE-RAMP CORNER INSTALLATION

See Notes 1 and 3

NOTES:

To accompany plans dated 12-14-09

1. As site conditions dictate, Case A through Case G curb ramps may be used for corner installations similar to those shown in Detail A and Detail B. The case of curb ramps used in Detail A do not have to be the same. Case A through Case G curb ramps also may be used at mid block locations, as site conditions dictate.
2. If distance from curb to back of sidewalk is too short to accommodate ramp and 4'-0" platform (landing) as shown in Case A, the sidewalk may be depressed longitudinally as in Case B, or C or may be widened as in Case D.
3. When ramp is located in center of curb return, crosswalk configuration must be similar to that shown for Detail B.
4. As site conditions dictate, the retaining curb side and the flared side of the Case G ramp shall be constructed in reversed position.
5. If located on a curve, the sides of the ramp need not be parallel, but the minimum width of the ramp shall be 4'-0".
6. Side slope of ramp flares vary uniformly from a maximum of 10% at curb to conform with longitudinal sidewalk slope adjacent to top of the ramp, except in Case C and Case F.
7. The curb ramp shall be outlined, as shown, with a 1'-0" wide border with ¼" grooves approximately ¾" on center. See grooving detail.
8. Transitions from ramps and landing to walks, gutters or streets shall be flush and free of abrupt changes.
9. Maximum slopes of adjoining gutters, the road surface immediately adjacent to the curb ramp or accessible route shall not exceed 5 percent within 4'-0" of the top and bottom of the curb ramp.
10. Curb ramps shall have a detectable warning surface that extends the full width and 3'-0" depth of the ramp. Detectable Warning Surfaces shall conform to the details on this plan and the requirements in the Special Provisions.
11. The edge of the detectable warning surface nearest the street shall be between 6" and 8" from the gutter flowline.
12. Sidewalk and ramp thickness, "T", shall be 3½" minimum.
13. Utility pull boxes, manholes, vaults and all other utility facilities within the boundaries of the curb ramp will be relocated or adjusted to grade by the owner prior to, or in conjunction with, curb ramp construction.
14. For retrofit conditions, removal and replacement of curb apron will be at the Contractor's option, unless otherwise shown on project plans.

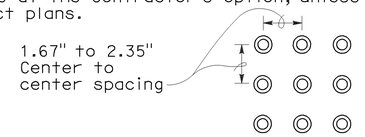

RAISED TRUNCATED DOME PATTERN (IN-LINE)

DETECTABLE WARNING SURFACE

See Note 10

STATE OF CALIFORNIA
DEPARTMENT OF TRANSPORTATION

CURB RAMP DETAILS

NO SCALE

RSP A88A DATED SEPTEMBER 1, 2006 SUPERSEDES STANDARD PLAN A88A DATED MAY 1, 2006 - PAGE 115 OF THE STANDARD PLANS BOOK DATED MAY 2006.

REVISED STANDARD PLAN RSP A88A

DIST	COUNTY	ROUTE	POST MILES TOTAL PROJECT	SHEET NO.	TOTAL SHEETS
12	Ora	57	16.2/18.6	699	960

H. David Cordova
REGISTERED CIVIL ENGINEER

September 1, 2006
PLANS APPROVAL DATE

Hector David Cordova No. C41957 Exp. 3-31-08 CIVIL — REGISTERED PROFESSIONAL ENGINEER — STATE OF CALIFORNIA

The State of California or its officers or agents shall not be responsible for the accuracy or completeness of electronic copies of this plan sheet.

2006 REVISED STANDARD PLAN RSP A88A

8-3-06

DIST	COUNTY	ROUTE	POST MILES TOTAL PROJECT	SHEET NO.	TOTAL SHEETS
12	Ora	57	16.2/18.6	700	960

William K. Farnbach
REGISTERED CIVIL ENGINEER

May 15, 2009
PLANS APPROVAL DATE

REGISTERED PROFESSIONAL ENGINEER — William K. Farnbach — No. C49042 — Exp. 9-30-10 CIVIL — STATE OF CALIFORNIA

The State of California or its officers or agents shall not be responsible for the accuracy or completeness of electronic copies of this plan sheet.

To accompany plans dated 12-14-09

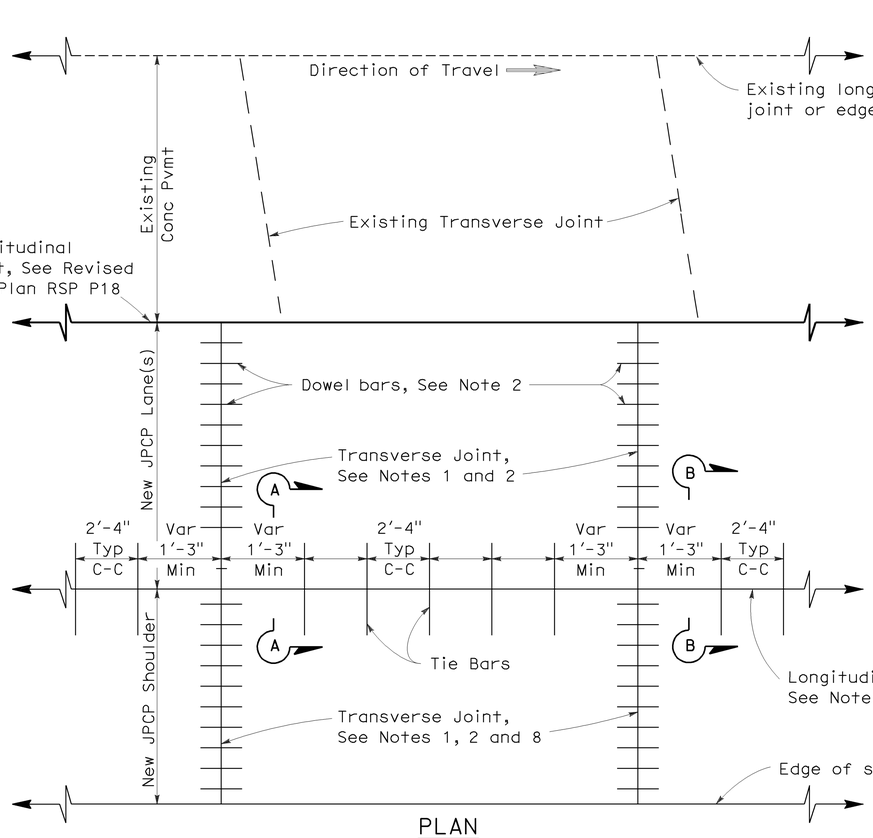

PLAN

LANE/SHOULDER ADDITION OR RECONSTRUCTION

See Notes 6 and 7

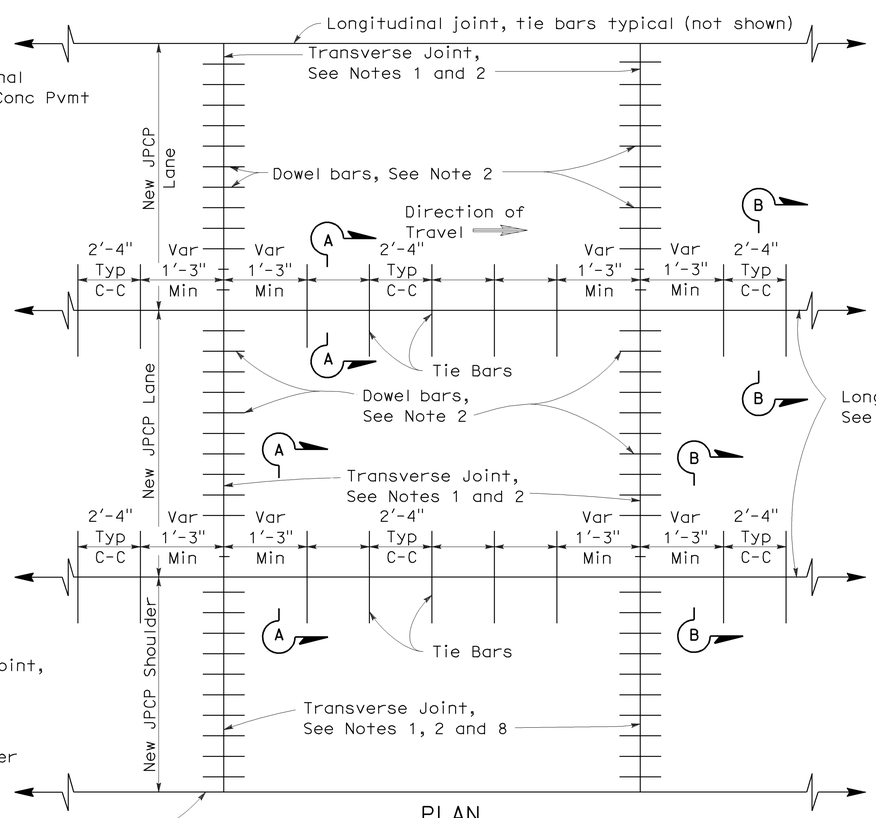

PLAN

NEW CONSTRUCTION

See Notes 6 and 7

NOTES:

1. Transverse joints shall be constructed at right angles to the longitudinal pavement joints in new jointed plain concrete pavement and spaced at successive repeated intervals of 12', 15', 13' and 14'.
2. For transverse joint and dowel bar details not shown, See Revised Standard Plan RSP P10.
3. Construct longitudinal contraction joints as shown in Section A-A when more than one lane or shoulder widths are placed at one time. If constructing one lane at a time, use longitudinal construction joint, as shown in Section B-B.
4. For additional longitudinal joint details, see Revised Standard Plan RSP P18.
5. If fresh concrete is placed adjacent to existing concrete, the top corner of the new hardened concrete does not need to be rounded to the 1/4" radius as shown.
6. Joint spacing patterns do not apply to intersections.
7. Details can also apply to inside widening.
8. Dowel bars may be omitted from shoulders when the shoulder cross slope is not the same as the adjacent traffic lane.

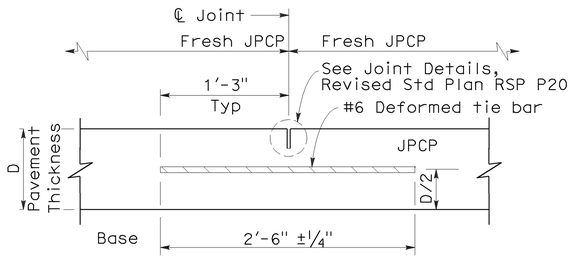

SECTION A-A

LONGITUDINAL CONTRACTION JOINT

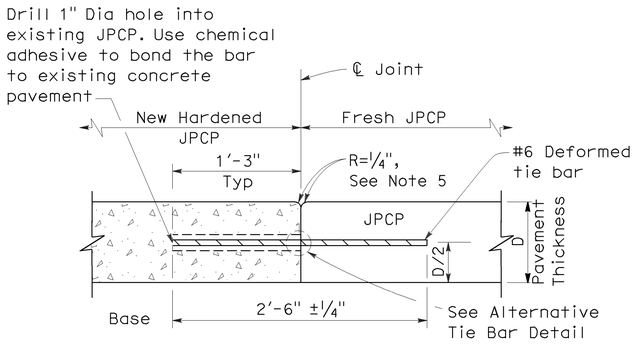

SECTION B-B

LONGITUDINAL CONSTRUCTION JOINT

TIE BAR DETAILS

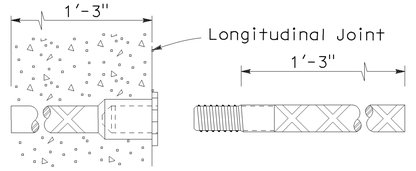

ALTERNATIVE TIE BAR SPLICE DETAIL

(Splice Coupler)

STATE OF CALIFORNIA
DEPARTMENT OF TRANSPORTATION

JOINTED PLAIN CONCRETE PAVEMENT

NO SCALE

RSP P1 DATED MAY 15, 2009 SUPERSEDES STANDARD PLAN P1
DATED MAY 1, 2006 - PAGE 119 OF THE STANDARD PLANS BOOK DATED MAY 2006.

REVISED STANDARD PLAN RSP P1

2006 REVISED STANDARD PLAN RSP P1

5-8-09