Dist	COUNTY	ROUTE	POST MILES TOTAL PROJECT	SHEET No.	TOTAL SHEETS
12	Ora	57	16.2/18.6	501	960

REGISTERED CIVIL ENGINEER — DATE 06/17/09

12-14-09
PLANS APPROVAL DATE

REGISTERED PROFESSIONAL ENGINEER — Chien-Tai Yang — No. C 66394 — Exp. 6-30-10 — CIVIL — STATE OF CALIFORNIA

THE STATE OF CALIFORNIA OR ITS OFFICERS OR AGENTS SHALL NOT BE RESPONSIBLE FOR THE ACCURACY OR COMPLETENESS OF SCANNED COPIES OF THIS PLAN SHEET.

ORANGE COUNTY TRANSPORTATION AUTHORITY
550 S. MAIN STREET
ORANGE, CA 92863-1584

EARTH MECHANICS, INC.
17660 NEWHOPE STREET, SUITE E
FOUNTAIN VALLEY, CA 92708

REFERENCE: CALTRANS SOIL & ROCK LOGGING, CLASSIFICATION, AND PRESENTATION MANUAL (JUNE 2007)

CEMENTATION

Description	Criteria
Weak	Crumbles or breaks with handling or little finger pressure.
Moderate	Crumbles or breaks with considerable finger pressure.
Strong	Will not crumble or break with finger pressure.

CONSISTENCY OF COHESIVE SOILS

Description	Unconfined Compressive Strength (tsf)	Pocket Penetrometer Measurement (tsf)	Torvane Measurement (tsf)	Field Approximation
Very Soft	< 0.25	< 0.25	< 0.12	Easily penetrated several inches by fist
Soft	0.25 to 0.50	0.25 to 0.50	0.12 to 0.25	Easily penetrated several inches by thumb
Medium Stiff	0.50 to 1.0	0.50 to 1.0	0.25 to 0.50	Penetrated several inches by thumb with moderate effort
Stiff	1 to 2	1 to 2	0.50 to 1.0	Readily indented by thumb but penetrated only with great effort
Very Stiff	2 to 4	2 to 4	1.0 to 2.0	Readily indented by thumbnail
Hard	> 4.0	> 4.0	> 2.0	Indented by thumbnail with difficulty

BOREHOLE IDENTIFICATION

Symbol	Hole Type	Description
Size	A	Auger Boring
Size	R P	Rotary drilled boring Rotary percussion boring (air)
Size	R	Rotary drilled diamond core
Size	HD HA	Hand driven (1-inch soil tube) Hand Auger
●	D	Dynamic Cone Penetration Boring
▲	CPT	Cone Penetration Test (ASTM D 5778-95)
⬚	O	Other

Note: Size in inches.

PLASTICITY OF FINE-GRAINED SOILS

Description	Criteria
Nonplastic	A 1/8-inch thread cannot be rolled at any water content.
Low	The thread can barely be rolled and the lump cannot be formed when drier than the plastic limit.
Medium	The thread is easy to roll and not much time is required to reach the plastic limit. The thread cannot be rerolled after reaching the plastic limit. The lump crumbles when drier than the plastic limit.
High	It takes considerable time rolling and kneading to reach the plastic limit. The thread can be rerolled several times after reaching the plastic limit. The lump can be formed without crumbling when drier than the plastic limit.

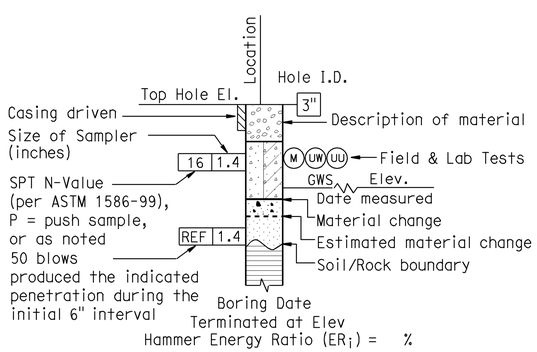

ROTARY BORING

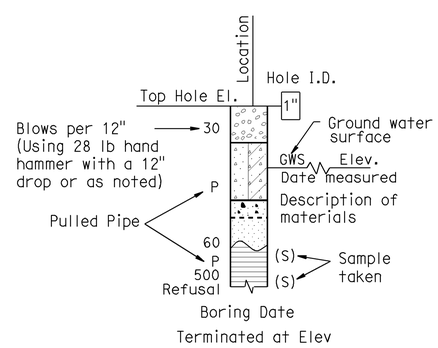

HAND BORING

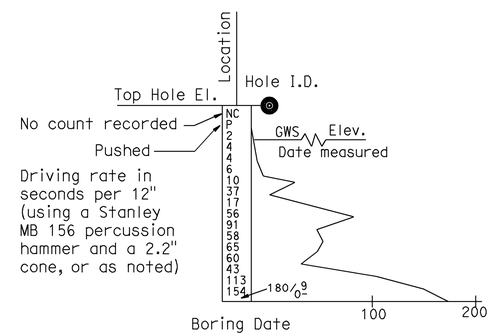

DYNAMIC CONE PENETRATION BORING

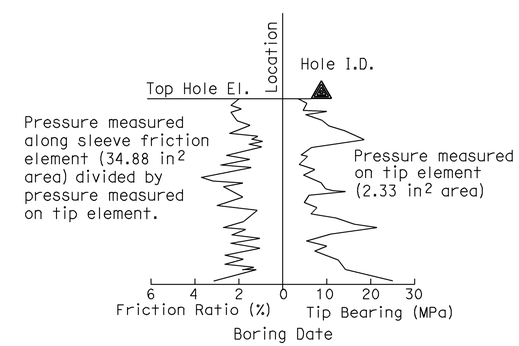

CONE PENETRATION TEST (CPT) SOUNDING

DESIGN OVERSIGHT — Jon Hamaguchi
6-24-09
SIGN OFF DATE

DRAWN BY: J.Fang
CHECKED BY: L.Cheang

FIELD INVESTIGATION BY:
R.Jie

PREPARED FOR THE STATE OF CALIFORNIA DEPARTMENT OF TRANSPORTATION

C.Yang
PROJECT ENGINEER

BRIDGE NO. 55E0078
POST MILES 16.2/18.6

RETAINING WALL NO. 462
LOG OF TEST BORINGS NO. 4

DESIGN GENERAL PLAN SHEET (ENGLISH) (REV. 2/25/05)

ORIGINAL SCALE IN INCHES FOR REDUCED PLANS 0 1 2 3

CU 12
EA 0F0311

DISREGARD PRINTS BEARING EARLIER REVISION DATES

REVISION DATES (PRELIMINARY STAGE ONLY)

SHEET 39 OF 83

FILE => 55e-538-z-462-ltb04.dgn

USERNAME => ttrene DATE PLOTTED => 17-DEC-2009 TIME PLOTTED => 10:05

REFERENCE: CALTRANS SOIL & ROCK LOGGING, CLASSIFICATION, AND PRESENTATION MANUAL (JUNE 2007)

GROUP SYMBOLS AND NAMES

Graphic/Symbol	Group Names
GW	Well-graded GRAVEL Well-graded GRAVEL with SAND
GP	Poorly graded GRAVEL Poorly graded GRAVEL with SAND
GW-GM	Well-graded GRAVEL with SILT Well-graded GRAVEL with SILT and SAND
GW-GC	Well-graded GRAVEL with CLAY (or SILTY CLAY) Well-graded GRAVEL with CLAY and SAND (or SILTY CLAY and SAND)
GP-GM	Poorly graded GRAVEL with SILT Poorly graded GRAVEL with SILT and SAND
GP-GC	Poorly graded GRAVEL with CLAY (or SILTY CLAY) Poorly graded GRAVEL with CLAY and SAND (or SILTY CLAY and SAND)
GM	SILTY GRAVEL SILTY GRAVEL with SAND
GC	CLAYEY GRAVEL CLAYEY GRAVEL with SAND
GC-GM	SILTY, CLAYEY GRAVEL SILTY, CLAYEY GRAVEL with SAND
SW	Well-graded SAND Well-graded SAND with GRAVEL
SP	Poorly graded SAND Poorly graded SAND with GRAVEL
SW-SM	Well-graded SAND with SILT Well-graded SAND with SILT and GRAVEL
SW-SC	Well-graded SAND with CLAY (or SILTY CLAY) Well-graded SAND with CLAY and GRAVEL (or SILTY CLAY and GRAVEL)
SP-SM	Poorly graded SAND with SILT Poorly graded SAND with SILT and GRAVEL
SP-SC	Poorly graded SAND with CLAY (or SILTY CLAY) Poorly graded SAND with CLAY and GRAVEL (or SILTY CLAY and GRAVEL)
SM	SILTY SAND SILTY SAND with GRAVEL
SC	CLAYEY SAND CLAYEY SAND with GRAVEL
SC-SM	SILTY, CLAYEY SAND SILTY, CLAYEY SAND with GRAVEL
PT	PEAT
	COBBLES COBBLES and BOULDERS BOULDERS

Graphic/Symbol	Group Names
CL	Lean CLAY Lean CLAY with SAND Lean CLAY with GRAVEL SANDY lean CLAY SANDY lean CLAY with GRAVEL GRAVELLY lean CLAY GRAVELLY lean CLAY with SAND
CL-ML	SILTY CLAY SILTY CLAY with SAND SILTY CLAY with GRAVEL SANDY SILTY CLAY SANDY SILTY CLAY with GRAVEL GRAVELLY SILTY CLAY GRAVELLY SILTY CLAY with SAND
ML	SILT SILT with SAND SILT with GRAVEL SANDY SILT SANDY SILT with GRAVEL GRAVELLY SILT GRAVELLY SILT with SAND
OL	ORGANIC lean CLAY ORGANIC lean CLAY with SAND ORGANIC lean CLAY with GRAVEL SANDY ORGANIC lean CLAY SANDY ORGANIC lean CLAY with GRAVEL GRAVELLY ORGANIC lean CLAY GRAVELLY ORGANIC lean CLAY with SAND
OL	ORGANIC SILT ORGANIC SILT with SAND ORGANIC SILT with GRAVEL SANDY ORGANIC SILT SANDY ORGANIC SILT with GRAVEL GRAVELLY ORGANIC SILT GRAVELLY ORGANIC SILT with SAND
CH	Fat CLAY Fat CLAY with SAND Fat CLAY with GRAVEL SANDY fat CLAY SANDY fat CLAY with GRAVEL GRAVELLY fat CLAY GRAVELLY fat CLAY with SAND
MH	Elastic SILT Elastic SILT with SAND Elastic SILT with GRAVEL SANDY elastic SILT SANDY elastic SILT with GRAVEL GRAVELLY elastic SILT GRAVELLY elastic SILT with SAND
OH	ORGANIC fat CLAY ORGANIC fat CLAY with SAND ORGANIC fat CLAY with GRAVEL SANDY ORGANIC fat CLAY SANDY ORGANIC fat CLAY with GRAVEL GRAVELLY ORGANIC fat CLAY GRAVELLY ORGANIC fat CLAY with SAND
OH	ORGANIC elastic SILT ORGANIC elastic SILT with SAND ORGANIC elastic SILT with GRAVEL SANDY ORGANIC elastic SILT SANDY ORGANIC elastic SILT with GRAVEL GRAVELLY ORGANIC elastic SILT GRAVELLY ORGANIC elastic SILT with SAND
OL/OH	ORGANIC SOIL ORGANIC SOIL with SAND ORGANIC SOIL with GRAVEL SANDY ORGANIC SOIL SANDY ORGANIC SOIL with GRAVEL GRAVELLY ORGANIC SOIL GRAVELLY ORGANIC SOIL with SAND

FIELD AND LABORATORY TESTING

- (C) Consolidation (ASTM D 2435)
- (CL) Collapse Potential (ASTM D 5333)
- (CP) Compaction Curve (CTM 216)
- (CR) Corrosivity Testing (CTM 643, CTM 422, CTM 417)
- (CU) Consolidated Undrained Triaxial (ASTM D 4767)
- (DS) Direct Shear (ASTM D 3080)
- (EI) Expansion Index (ASTM D 4829)
- (M) Moisture Content (ASTM D 2216)
- (OC) Organic Content-% (ASTM D 2974)
- (P) Permeability (CTM 220)
- (PA) Particle Size Analysis (ASTM D 422)
- (PI) Plasticity Index (AASHTO T 90) Liquid Limit (AASHTO T 89)
- (PL) Point Load Index (ASTM D 5731)
- (PM) Pressure Meter
- (PP) Pocket Penetrometer
- (R) R-Value (CTM 301)
- (SE) Sand Equivalent (CTM 217)
- (SG) Specific Gravity (AASHTO T 100)
- (SL) Shrinkage Limit (ASTM D 427)
- (SW) Swell Potential (ASTM D 4546)
- (TV) Pocket Torvane
- (UC) Unconfined Compression-Soil (ASTM D 2166) Unconfined Compression-Rock (ASTM D 2938)
- (UU) Unconsolidated Undrained Triaxial (ASTM D 2850)
- (UW) Unit Weight (ASTM D 4767)
- (VS) Vane Shear (AASHTO T 223)

Dist	COUNTY	ROUTE	POST MILES TOTAL PROJECT	SHEET No.	TOTAL SHEETS
12	Ora	57	16.2/18.6	502	960

REGISTERED CIVIL ENGINEER — DATE 06/17/09

12-14-09
PLANS APPROVAL DATE

REGISTERED PROFESSIONAL ENGINEER — Chien-Tai Yang — No. C 66394 — Exp. 6-30-10 — CIVIL — STATE OF CALIFORNIA

THE STATE OF CALIFORNIA OR ITS OFFICERS OR AGENTS SHALL NOT BE RESPONSIBLE FOR THE ACCURACY OR COMPLETENESS OF SCANNED COPIES OF THIS PLAN SHEET.

ORANGE COUNTY TRANSPORTATION AUTHORITY
550 S. MAIN STREET
ORANGE, CA 92863-1584

EARTH MECHANICS, INC.
17660 NEWHOPE STREET, SUITE E
FOUNTAIN VALLEY, CA 92708

APPARENT DENSITY OF COHESIONLESS SOILS

Description	SPT N_{60} (Blows / 12 inches)
Very loose	0 - 4
Loose	5 - 10
Medium Dense	11 - 30
Dense	31 - 50
Very Dense	> 50

MOISTURE

Description	Criteria
Dry	Absence of moisture, dusty, dry to the touch
Moist	Damp but no visible water
Wet	Visible free water, usually soil is below water table

PERCENT OR PROPORTION OF SOILS

Description	Criteria
Trace	Particles are present but estimated to be less than 5%
Few	5 to 10%
Little	15 to 25%
Some	30 to 45%
Mostly	50 to 100%

PARTICLE SIZE

Description		Size
Boulder		> 12"
Cobble		3" to 12"
Gravel	Coarse	3/4" to 3"
	Fine	No. 4 to 3/4"
Sand	Coarse	No. 10 to No. 4
	Medium	No. 40 to No. 10
	Fine	No. 200 to No. 40

DESIGN OVERSIGHT — Jon Hamaguchi
6-24-09
SIGN OFF DATE

DRAWN BY: J.Fang
CHECKED BY: L.Cheang

FIELD INVESTIGATION BY:
R.Jie

PREPARED FOR THE STATE OF CALIFORNIA DEPARTMENT OF TRANSPORTATION

C.Yang
PROJECT ENGINEER

BRIDGE NO. 55E0078
POST MILES 16.2/18.6

RETAINING WALL NO. 462
LOG OF TEST BORINGS NO. 5

DESIGN GENERAL PLAN SHEET (ENGLISH) (REV. 2/25/05)

ORIGINAL SCALE IN INCHES FOR REDUCED PLANS 0 1 2 3

CU 12
EA 0F0311

DISREGARD PRINTS BEARING EARLIER REVISION DATES

REVISION DATES (PRELIMINARY STAGE ONLY)

SHEET 40 OF 83

FILE => 55e-538-z-462-ltb05.dgn

USERNAME => trrene DATE PLOTTED => 17-DEC-2009 TIME PLOTTED => 10:06

DIST.	COUNTY	ROUTE	POST MILES—TOTAL PROJECT	SHEET NO.	TOTAL SHEETS
07	ORA	57	16.0/16.4	28	35

Robert L. Reynolds #165
BRIDGE ENGINEERING GEOLOGIST — CENT ENGINEERING GEOLOGIST MP
DATE APPROVED July 7, 1980

BENCH MARK

BM ORA 57 M 16.08 (457-65) Elev. 199.62 Fd. Ramset nl. at the bck. of the N. of the Service Rd. to the apt. bldgs; approx. 50' E. of the ℄ of Cypress Ave, & approx. 115'S. of ℄ La Jolla Rd. Ref: SK. # 74-262, Pg. 0199 (Rec. El. = 199.62) as per Dist. 07 Survey Notes No. 78-292, Page 0004, dated 1-10-79.

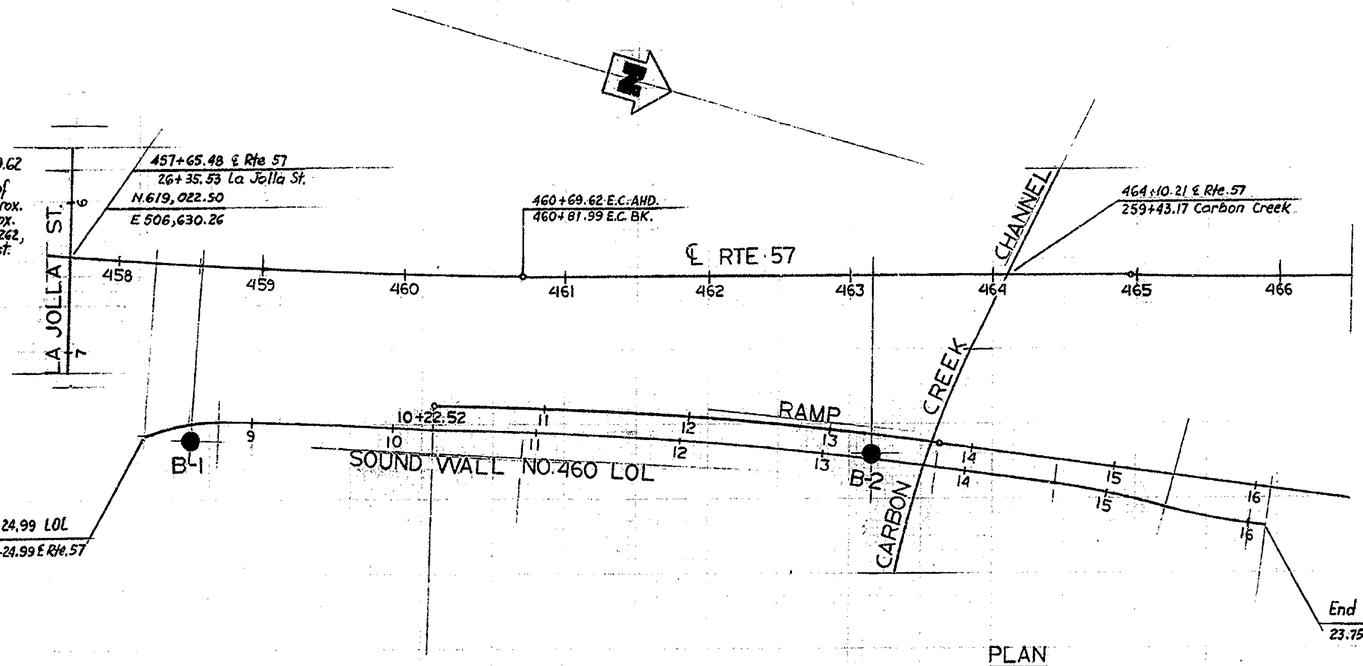

PLAN
1"=50'

NO GROUND WATER ENCOUNTERED
DURING THIS INVESTIGATION BY OFFICE OF STRUCTURES
GEOLOGIC STUDIES SECTION
DATE 1-3-79

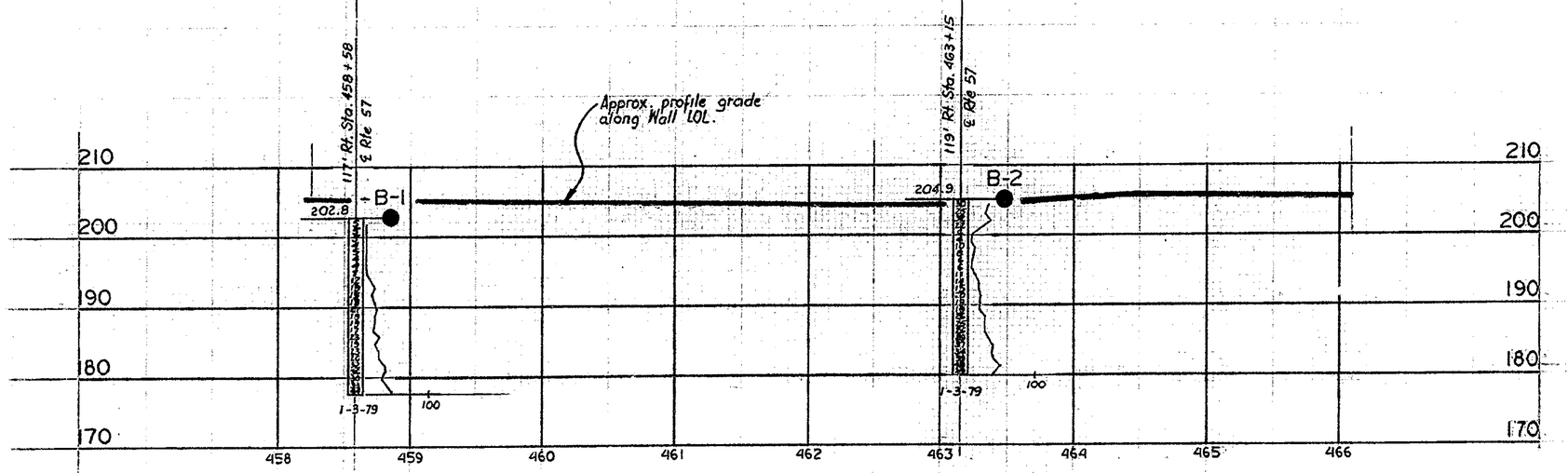

PROFILE
HORIZ. 1"=50'
VERT. 1"=10'

DIVISION OF ENGINEERING SERVICES - GEOTECHNICAL SERVICES

As-Built Log of Test Borings sheet is considered an informational document only. As such, the State of California registration seal with signature, license number and registration certificate expiration date confirm that this is a true and accurate copy of the original document. This drawing is available and presented only for the convenience of any bidder, contractor or other interested party.

DIST.	COUNTY	ROUTE	POST MILES -TOTAL PROJECT	Sheet No.	Total Sheets
12	Ora	57	16.2/18.6	503	960

Lino Cheang — 06/17/09
REGISTERED CIVIL ENGINEER — DATE

RETAINING WALL No. 462

AS-BUILT LOG OF TEST BORINGS No. 6

NOTE: A COPY OF THIS LOG OF TEST BORINGS IS AVAILABLE AT OFFICE OF STRUCTURE MAINTENANCE AND INVESTIGATIONS, SACRAMENTO, CALIFORNIA

CU: 12 EA: 0F0311 — BRIDGE No. 55E0078

To accompany plans dated 12-14-09

Sheet 41 of 83

REGISTERED PROFESSIONAL ENGINEER — LINO C. CHEANG — NO. GE 2345 — EXP. 9/30/09 — GEOTECHNICAL — STATE OF CALIFORNIA

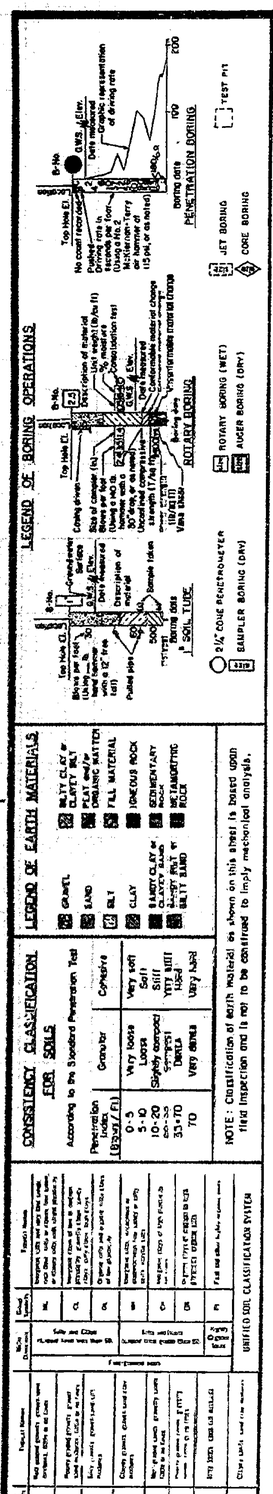

NOTE: Classification of earth material as shown on this sheet is based upon field inspection and is not to be construed to imply material analysis.

ENGINEERING GEOLOGY SECTION
FIELD STUDY By H.C. CAIN, 1-3-79
DRAWN By VICTOR SESTOKAS, 4-26-79
CHECKED By J. L. Chenoweth 5-7-79
Approval Recommended By — ENGINEERING GEOLOGIST — CERTIFIED ENGINEERING GEOLOGIST NUMBER

State of CALIFORNIA DEPARTMENT OF TRANSPORTATION

OFFICE OF STRUCTURES DESIGN GROUP 7
PROJECT ENGINEER D. Kiland

BRIDGE NO. SPEC. DESIGN 55-0460 RW
POST MILE 15.9/16.4

SOUND WALL NO 460
LOG OF TEST BORINGS

FILENAME => 55e-538-z-462-1tb06.tif

ORIGINAL SCALE IN INCHES FOR REDUCED PLANS 0 1 2 3

CU 07210
WO 438001

Disregard prints bearing earlier revision dates

REVISION DATES (PRELIMINARY STAGE ONLY) 1/1/80

SHEET 18 OF 21

AS BUILT
NO CORRECTIONS BY P.J. Hixson
CONTRACT NO. 07-438004
DATE 8-1-81 - 12-2-81 AJC

CHARDEN 17-JUN-2009 06:57
H:\pdata\10105878\CADD\Struc\Div\Walls\55e-538-z-462-1tb06.dgn

Dist	COUNTY	ROUTE	POST MILES TOTAL PROJECT	SHEET No.	TOTAL SHEETS
12	Ora	57	16.2/18.6	504	960

REGISTERED CIVIL ENGINEER — DATE 06/17/09

12-14-09
PLANS APPROVAL DATE

REGISTERED PROFESSIONAL ENGINEER — Chien-Tai Yang — No. C 66394 — Exp. 6-30-10 — CIVIL — STATE OF CALIFORNIA

THE STATE OF CALIFORNIA OR ITS OFFICERS OR AGENTS SHALL NOT BE RESPONSIBLE FOR THE ACCURACY OR COMPLETENESS OF SCANNED COPIES OF THIS PLAN SHEET.

ORANGE COUNTY TRANSPORTATION AUTHORITY
550 S. MAIN STREET
ORANGE, CA 92863-1584

EARTH MECHANICS, INC.
17660 NEWHOPE STREET, SUITE E
FOUNTAIN VALLEY, CA 92708

BENCHMARKS:

Vertical Datum NAVD 88

Designation: 1L-54-82 Elev = 153.171
Described by OCS 2002 - Found 3¾" OCS Aluminum Benchmark Disk Stamped "1L-54-82", set in the Top of a 6 in. by 6 in. Concrete Post. Monument is located along the Westerly Levee of the Santa Ana River, 0.25 Miles Northerly along Levee from the Centerline of Orangewood Avenue, 200 ft. Northeasterly of the Easterly Leg of the Anaheim Angels 200 ft. tall sign, 69 ft. Westerly of the Centerline of the Bike Trail and 1.5 ft. Westerly of a Steel OCS Witness Post. Monument is set 0.3 below the Ground.

Designation: 2G-25-70 Elev = 275.872
Described by OCS 2003 - Found 3¾" OCS Aluminum Benchmark Disk Stamped "2G-25-70", set in the Southeasterly Corner of a 4 ft by 6 ft Concrete Catch Basin. Monument is Located in the Northwesterly Corner of the Intersection of Yorba Linda Boulevard and Deerpark Drive, 75 ft Westerly of the Centerline of Deerpark and 46 ft Northerly of the Centerline of Yorba Linda. Monument is set Level with the Sidewalk.

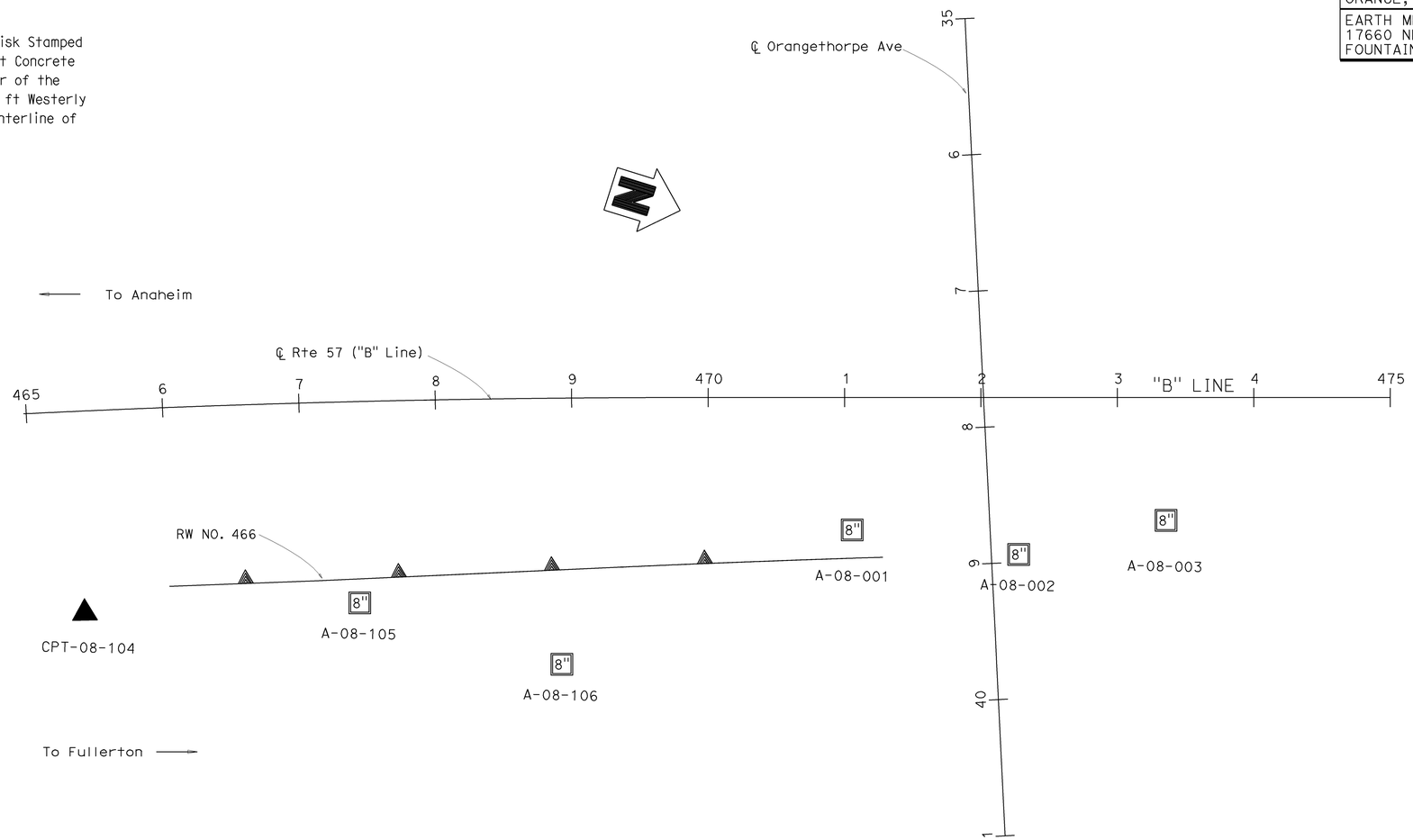

PLAN
1" = 50'

DESIGN OVERSIGHT Jon Hanaguchi
6-24-09
SIGN OFF DATE

DRAWN BY: J.Fang
CHECKED BY: L.Cheang

FIELD INVESTIGATION BY:
R.Jie

PREPARED FOR THE
STATE OF CALIFORNIA
DEPARTMENT OF TRANSPORTATION

C. Yang
PROJECT ENGINEER

BRIDGE NO. 55E0079
POST MILES 16.2/18.6

RETAINING WALL NO. 466
LOG OF TEST BORINGS NO. 1

DESIGN GENERAL PLAN SHEET (ENGLISH) (REV. 2/25/05)

ORIGINAL SCALE IN INCHES FOR REDUCED PLANS 0 1 2 3

CU 12
EA 0F0311

DISREGARD PRINTS BEARING EARLIER REVISION DATES

REVISION DATES (PRELIMINARY STAGE ONLY) 4/30/09

SHEET 42 OF 83

FILE => 55e-538-z-466-ltb01.dgn

USERNAME => trrene DATE PLOTTED => 17-DEC-2009 TIME PLOTTED => 10:06

Dist	COUNTY	ROUTE	POST MILES TOTAL PROJECT	SHEET No.	TOTAL SHEETS
12	Ora	57	16.2/18.6	505	960

REGISTERED CIVIL ENGINEER 06/17/09 DATE

12-14-09
PLANS APPROVAL DATE

REGISTERED PROFESSIONAL ENGINEER Chien-Tai Yang No. C 66394 Exp. 6-30-10 CIVIL STATE OF CALIFORNIA

THE STATE OF CALIFORNIA OR ITS OFFICERS OR AGENTS SHALL NOT BE RESPONSIBLE FOR THE ACCURACY OR COMPLETENESS OF SCANNED COPIES OF THIS PLAN SHEET.

ORANGE COUNTY TRANSPORTATION AUTHORITY
550 S. MAIN STREET
ORANGE, CA 92863-1584

EARTH MECHANICS, INC.
17660 NEWHOPE STREET, SUITE E
FOUNTAIN VALLEY, CA 92708

FOR PLAN VIEW SEE "RETAINING WALL NO. 466, LOG OF TEST BORINGS NO. 1"

NOTES:

(1) This LOTB sheet was prepared in accordance with the Caltrans Soil and Rock Logging, Classification and Presentation Manual (June 2007)
(2) 2.4" samples were taken using a California Modified Sampler.
(3) An automatic trip hammer system consisting of a hammer weight of 140 lbs falling a distance of 30" was used to advance the drive sampler.
(4) Conversion factor from 2.4" Modified California Ring Sampler blowcounts to Standard Penetration Test (SPT) blowcounts is 0.5.

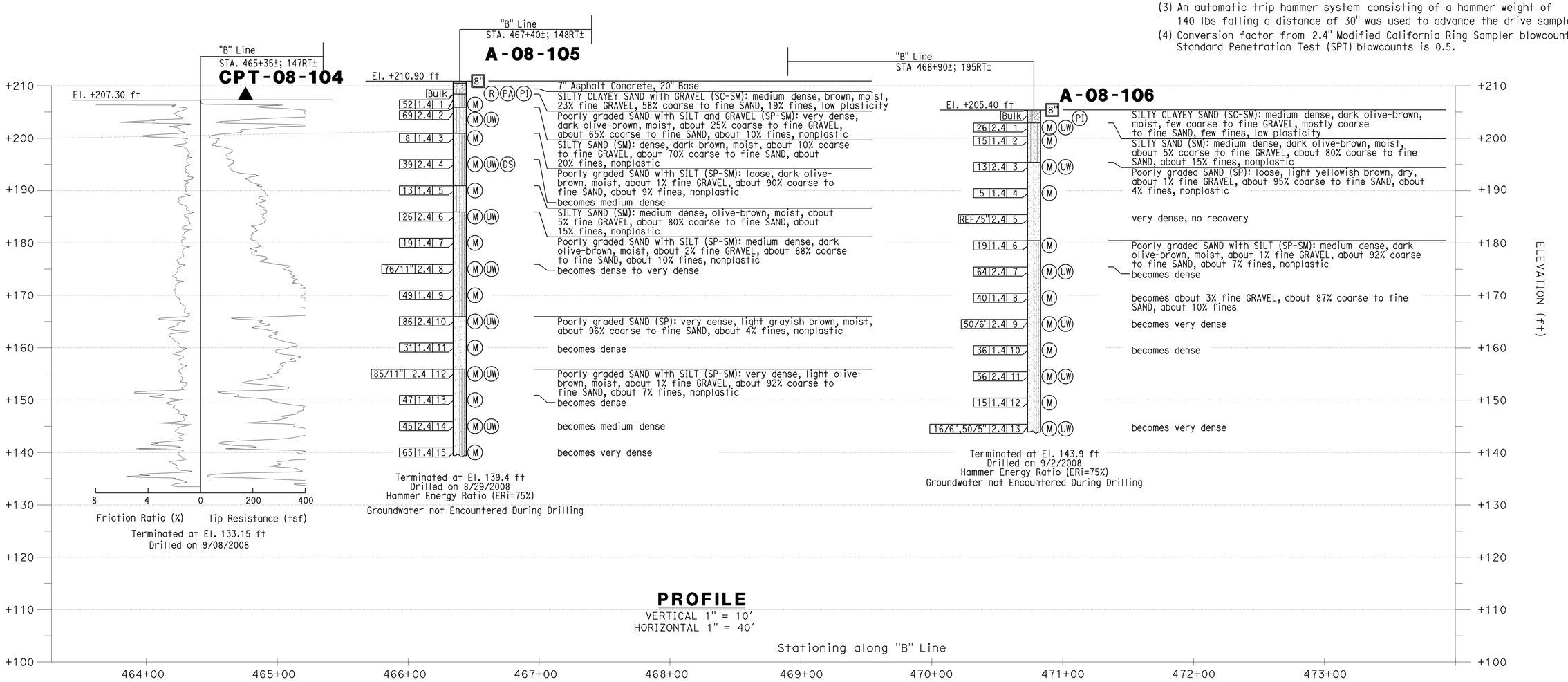

PROFILE
VERTICAL 1" = 10'
HORIZONTAL 1" = 40'

DESIGN OVERSIGHT Jon Hamaguchi 6-24-09 SIGN OFF DATE	DRAWN BY: J.Fang CHECKED BY: L.Cheang	FIELD INVESTIGATION BY: R.Jie	PREPARED FOR THE STATE OF CALIFORNIA DEPARTMENT OF TRANSPORTATION	C.Yang PROJECT ENGINEER	BRIDGE NO. 55E0079 POST MILES 16.2/18.6	RETAINING WALL NO. 466 LOG OF TEST BORINGS NO. 2

DESIGN GENERAL PLAN SHEET (ENGLISH) (REV. 2/25/05)

ORIGINAL SCALE IN INCHES FOR REDUCED PLANS 0 1 2 3

CU 12
EA 0F0311

DISREGARD PRINTS BEARING EARLIER REVISION DATES

REVISION DATES (PRELIMINARY STAGE ONLY) 4/30/09

SHEET 43 OF 83

FILE => 55e-538-z-466-1tb02.dgn

USERNAME => trrene DATE PLOTTED => 17-DEC-2009 TIME PLOTTED => 10:06

Dist	COUNTY	ROUTE	POST MILES TOTAL PROJECT	SHEET No.	TOTAL SHEETS
12	Ora	57	16.2/18.6	506	960

REGISTERED CIVIL ENGINEER 06/17/09 DATE

12-14-09
PLANS APPROVAL DATE

REGISTERED PROFESSIONAL ENGINEER Chien-Tai Yang No. C 66394 Exp. 6-30-10 CIVIL STATE OF CALIFORNIA

THE STATE OF CALIFORNIA OR ITS OFFICERS OR AGENTS SHALL NOT BE RESPONSIBLE FOR THE ACCURACY OR COMPLETENESS OF SCANNED COPIES OF THIS PLAN SHEET.

ORANGE COUNTY TRANSPORTATION AUTHORITY
550 S. MAIN STREET
ORANGE, CA 92863-1584

EARTH MECHANICS, INC.
17660 NEWHOPE STREET, SUITE E
FOUNTAIN VALLEY, CA 92708

FOR PLAN VIEW SEE "RETAINING WALL NO. 466, LOG OF TEST BORINGS NO. 1"

NOTES:

(1) This LOTB sheet was prepared in accordance with the Caltrans Soil and Rock Logging, Classification and Presentation Manual (June 2007)

(2) 2.4" samples were taken using a California Modified Sampler.

(3) An automatic trip hammer system consisting of a hammer weight of 140 lbs falling a distance of 30" was used to advance the drive sampler.

(4) Conversion factor from 2.4" Modified California Ring Sampler blowcounts to Standard Penetration Test (SPT) blowcounts is 0.5.

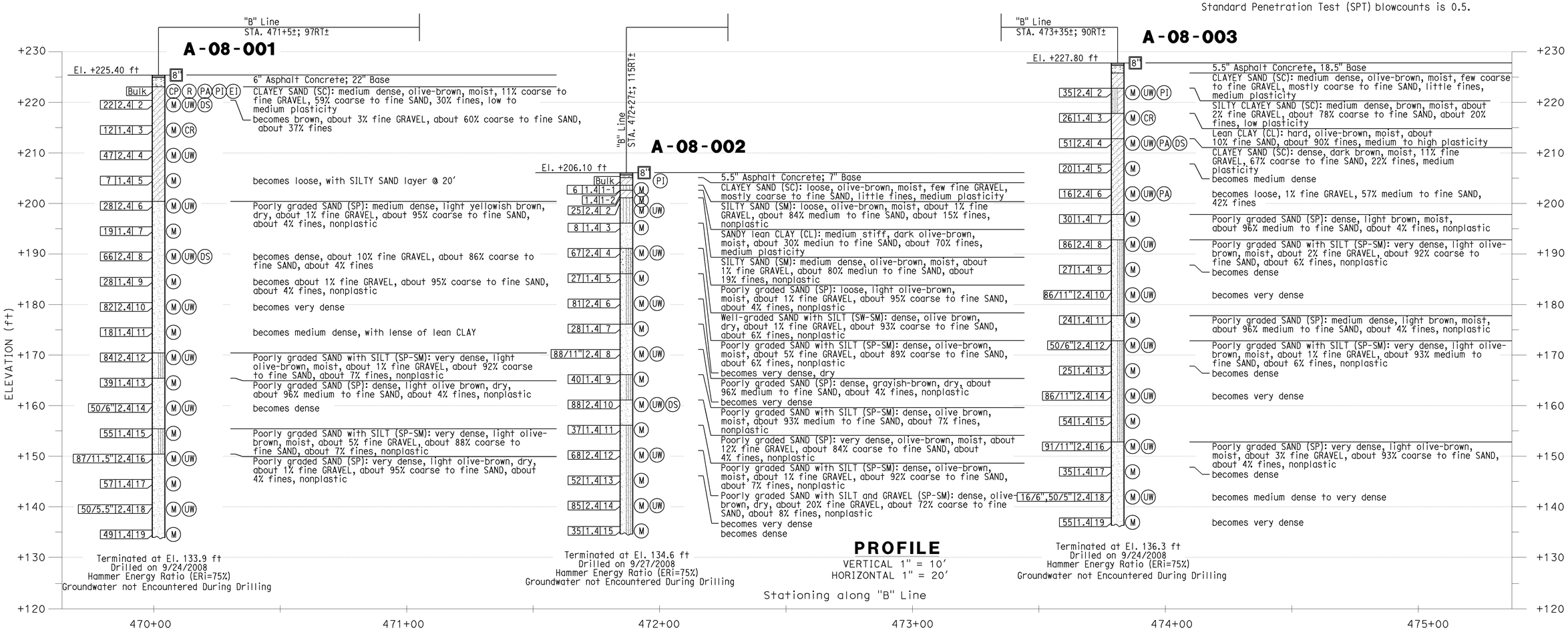

DESIGN OVERSIGHT Jon Hamaguchi 6-24-09 SIGN OFF DATE	DRAWN BY: J.Fang CHECKED BY: L.Cheang	FIELD INVESTIGATION BY: R.Jie	PREPARED FOR THE STATE OF CALIFORNIA DEPARTMENT OF TRANSPORTATION	C. Yang PROJECT ENGINEER	BRIDGE NO. 55E0079 POST MILES 16.2/18.6	RETAINING WALL NO. 466 LOG OF TEST BORINGS NO. 3

DESIGN GENERAL PLAN SHEET (ENGLISH) (REV. 2/25/05)

ORIGINAL SCALE IN INCHES FOR REDUCED PLANS 0 1 2 3

CU 12
EA 0F0311

DISREGARD PRINTS BEARING EARLIER REVISION DATES 4/30/09

REVISION DATES (PRELIMINARY STAGE ONLY)

SHEET 44 OF 83

FILE => 55e-538-z-466-ltb03.dgn

USERNAME => trrene DATE PLOTTED => 17-DEC-2009 TIME PLOTTED => 10:06

Dist	COUNTY	ROUTE	POST MILES TOTAL PROJECT	SHEET No.	TOTAL SHEETS
12	Ora	57	16.2/18.6	507	960

REGISTERED CIVIL ENGINEER — DATE 06/17/09

12-14-09
PLANS APPROVAL DATE

REGISTERED PROFESSIONAL ENGINEER — Chien-Tai Yang — No. C 66394 — Exp. 6-30-10 — CIVIL — STATE OF CALIFORNIA

THE STATE OF CALIFORNIA OR ITS OFFICERS OR AGENTS SHALL NOT BE RESPONSIBLE FOR THE ACCURACY OR COMPLETENESS OF SCANNED COPIES OF THIS PLAN SHEET.

ORANGE COUNTY TRANSPORTATION AUTHORITY
550 S. MAIN STREET
ORANGE, CA 92863-1584

EARTH MECHANICS, INC.
17660 NEWHOPE STREET, SUITE E
FOUNTAIN VALLEY, CA 92708

REFERENCE: CALTRANS SOIL & ROCK LOGGING, CLASSIFICATION, AND PRESENTATION MANUAL (JUNE 2007)

CEMENTATION

Description	Criteria
Weak	Crumbles or breaks with handling or little finger pressure.
Moderate	Crumbles or breaks with considerable finger pressure.
Strong	Will not crumble or break with finger pressure.

CONSISTENCY OF COHESIVE SOILS

Description	Unconfined Compressive Strength (tsf)	Pocket Penetrometer Measurement (tsf)	Torvane Measurement (tsf)	Field Approximation
Very Soft	< 0.25	< 0.25	< 0.12	Easily penetrated several inches by fist
Soft	0.25 to 0.50	0.25 to 0.50	0.12 to 0.25	Easily penetrated several inches by thumb
Medium Stiff	0.50 to 1.0	0.50 to 1.0	0.25 to 0.50	Penetrated several inches by thumb with moderate effort
Stiff	1 to 2	1 to 2	0.50 to 1.0	Readily indented by thumb but penetrated only with great effort
Very Stiff	2 to 4	2 to 4	1.0 to 2.0	Readily indented by thumbnail
Hard	> 4.0	> 4.0	> 2.0	Indented by thumbnail with difficulty

BOREHOLE IDENTIFICATION

Symbol	Hole Type	Description
Size	A	Auger Boring
Size	R P	Rotary drilled boring Rotary percussion boring (air)
Size	R	Rotary drilled diamond core
Size	HD HA	Hand driven (1-inch soil tube) Hand Auger
●	D	Dynamic Cone Penetration Boring
▲	CPT	Cone Penetration Test (ASTM D 5778-95)
⬚	O	Other

Note: Size in inches.

PLASTICITY OF FINE-GRAINED SOILS

Description	Criteria
Nonplastic	A 1/8-inch thread cannot be rolled at any water content.
Low	The thread can barely be rolled and the lump cannot be formed when drier than the plastic limit.
Medium	The thread is easy to roll and not much time is required to reach the plastic limit. The thread cannot be rerolled after reaching the plastic limit. The lump crumbles when drier than the plastic limit.
High	It takes considerable time rolling and kneading to reach the plastic limit. The thread can be rerolled several times after reaching the plastic limit. The lump can be formed without crumbling when drier than the plastic limit.

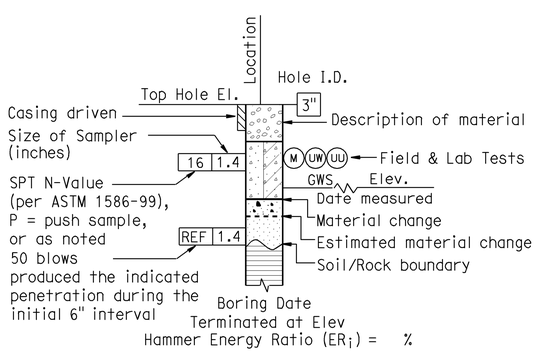

ROTARY BORING

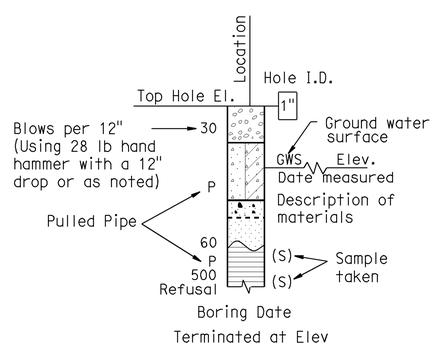

HAND BORING

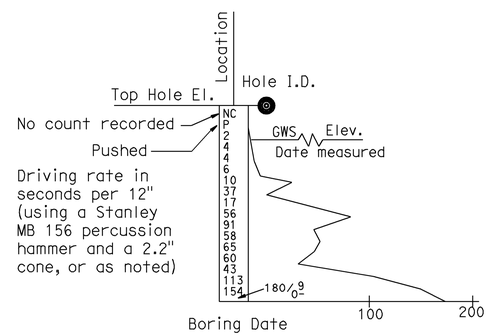

DYNAMIC CONE PENETRATION BORING

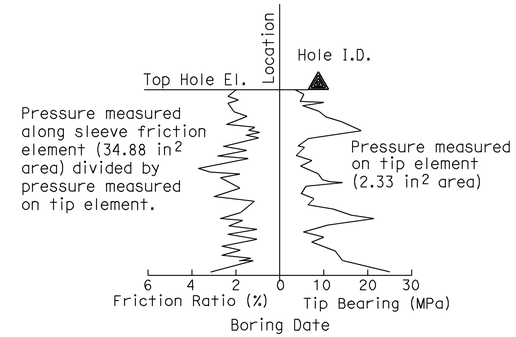

CONE PENETRATION TEST (CPT) SOUNDING

DESIGN OVERSIGHT — Jon Hamaguchi
6-24-09
SIGN OFF DATE

DRAWN BY: J.Fang
CHECKED BY: L.Cheang

FIELD INVESTIGATION BY:
R.Jie

PREPARED FOR THE STATE OF CALIFORNIA DEPARTMENT OF TRANSPORTATION

C.Yang
PROJECT ENGINEER

BRIDGE NO. 55E0079
POST MILES 16.2/18.6

RETAINING WALL NO. 466
LOG OF TEST BORINGS NO. 4

DESIGN GENERAL PLAN SHEET (ENGLISH) (REV. 2/25/05)

ORIGINAL SCALE IN INCHES FOR REDUCED PLANS 0 1 2 3

CU 12
EA 0F0311

DISREGARD PRINTS BEARING EARLIER REVISION DATES

REVISION DATES (PRELIMINARY STAGE ONLY)

SHEET 45 OF 83

FILE => 55e-538-z-466-ltb04.dgn

USERNAME => ttrene DATE PLOTTED => 17-DEC-2009 TIME PLOTTED => 10:06

REFERENCE: CALTRANS SOIL & ROCK LOGGING, CLASSIFICATION, AND PRESENTATION MANUAL (JUNE 2007)

GROUP SYMBOLS AND NAMES

Graphic/Symbol	Group Names
GW	Well-graded GRAVEL Well-graded GRAVEL with SAND
GP	Poorly graded GRAVEL Poorly graded GRAVEL with SAND
GW-GM	Well-graded GRAVEL with SILT Well-graded GRAVEL with SILT and SAND
GW-GC	Well-graded GRAVEL with CLAY (or SILTY CLAY) Well-graded GRAVEL with CLAY and SAND (or SILTY CLAY and SAND)
GP-GM	Poorly graded GRAVEL with SILT Poorly graded GRAVEL with SILT and SAND
GP-GC	Poorly graded GRAVEL with CLAY (or SILTY CLAY) Poorly graded GRAVEL with CLAY and SAND (or SILTY CLAY and SAND)
GM	SILTY GRAVEL SILTY GRAVEL with SAND
GC	CLAYEY GRAVEL CLAYEY GRAVEL with SAND
GC-GM	SILTY, CLAYEY GRAVEL SILTY, CLAYEY GRAVEL with SAND
SW	Well-graded SAND Well-graded SAND with GRAVEL
SP	Poorly graded SAND Poorly graded SAND with GRAVEL
SW-SM	Well-graded SAND with SILT Well-graded SAND with SILT and GRAVEL
SW-SC	Well-graded SAND with CLAY (or SILTY CLAY) Well-graded SAND with CLAY and GRAVEL (or SILTY CLAY and GRAVEL)
SP-SM	Poorly graded SAND with SILT Poorly graded SAND with SILT and GRAVEL
SP-SC	Poorly graded SAND with CLAY (or SILTY CLAY) Poorly graded SAND with CLAY and GRAVEL (or SILTY CLAY and GRAVEL)
SM	SILTY SAND SILTY SAND with GRAVEL
SC	CLAYEY SAND CLAYEY SAND with GRAVEL
SC-SM	SILTY, CLAYEY SAND SILTY, CLAYEY SAND with GRAVEL
PT	PEAT
	COBBLES COBBLES and BOULDERS BOULDERS

Graphic/Symbol	Group Names
CL	Lean CLAY Lean CLAY with SAND Lean CLAY with GRAVEL SANDY lean CLAY SANDY lean CLAY with GRAVEL GRAVELLY lean CLAY GRAVELLY lean CLAY with SAND
CL-ML	SILTY CLAY SILTY CLAY with SAND SILTY CLAY with GRAVEL SANDY SILTY CLAY SANDY SILTY CLAY with GRAVEL GRAVELLY SILTY CLAY GRAVELLY SILTY CLAY with SAND
ML	SILT SILT with SAND SILT with GRAVEL SANDY SILT SANDY SILT with GRAVEL GRAVELLY SILT GRAVELLY SILT with SAND
OL	ORGANIC lean CLAY ORGANIC lean CLAY with SAND ORGANIC lean CLAY with GRAVEL SANDY ORGANIC lean CLAY SANDY ORGANIC lean CLAY with GRAVEL GRAVELLY ORGANIC lean CLAY GRAVELLY ORGANIC lean CLAY with SAND
OL	ORGANIC SILT ORGANIC SILT with SAND ORGANIC SILT with GRAVEL SANDY ORGANIC SILT SANDY ORGANIC SILT with GRAVEL GRAVELLY ORGANIC SILT GRAVELLY ORGANIC SILT with SAND
CH	Fat CLAY Fat CLAY with SAND Fat CLAY with GRAVEL SANDY fat CLAY SANDY fat CLAY with GRAVEL GRAVELLY fat CLAY GRAVELLY fat CLAY with SAND
MH	Elastic SILT Elastic SILT with SAND Elastic SILT with GRAVEL SANDY elastic SILT SANDY elastic SILT with GRAVEL GRAVELLY elastic SILT GRAVELLY elastic SILT with SAND
OH	ORGANIC fat CLAY ORGANIC fat CLAY with SAND ORGANIC fat CLAY with GRAVEL SANDY ORGANIC fat CLAY SANDY ORGANIC fat CLAY with GRAVEL GRAVELLY ORGANIC fat CLAY GRAVELLY ORGANIC fat CLAY with SAND
OH	ORGANIC elastic SILT ORGANIC elastic SILT with SAND ORGANIC elastic SILT with GRAVEL SANDY ORGANIC elastic SILT SANDY ORGANIC elastic SILT with GRAVEL GRAVELLY ORGANIC elastic SILT GRAVELLY ORGANIC elastic SILT with SAND
OL/OH	ORGANIC SOIL ORGANIC SOIL with SAND ORGANIC SOIL with GRAVEL SANDY ORGANIC SOIL SANDY ORGANIC SOIL with GRAVEL GRAVELLY ORGANIC SOIL GRAVELLY ORGANIC SOIL with SAND

FIELD AND LABORATORY TESTING

- (C) Consolidation (ASTM D 2435)
- (CL) Collapse Potential (ASTM D 5333)
- (CP) Compaction Curve (CTM 216)
- (CR) Corrosivity Testing (CTM 643, CTM 422, CTM 417)
- (CU) Consolidated Undrained Triaxial (ASTM D 4767)
- (DS) Direct Shear (ASTM D 3080)
- (EI) Expansion Index (ASTM D 4829)
- (M) Moisture Content (ASTM D 2216)
- (OC) Organic Content-% (ASTM D 2974)
- (P) Permeability (CTM 220)
- (PA) Particle Size Analysis (ASTM D 422)
- (PI) Plasticity Index (AASHTO T 90) Liquid Limit (AASHTO T 89)
- (PL) Point Load Index (ASTM D 5731)
- (PM) Pressure Meter
- (PP) Pocket Penetrometer
- (R) R-Value (CTM 301)
- (SE) Sand Equivalent (CTM 217)
- (SG) Specific Gravity (AASHTO T 100)
- (SL) Shrinkage Limit (ASTM D 427)
- (SW) Swell Potential (ASTM D 4546)
- (TV) Pocket Torvane
- (UC) Unconfined Compression-Soil (ASTM D 2166) Unconfined Compression-Rock (ASTM D 2938)
- (UU) Unconsolidated Undrained Triaxial (ASTM D 2850)
- (UW) Unit Weight (ASTM D 4767)
- (VS) Vane Shear (AASHTO T 223)

Dist	COUNTY	ROUTE	POST MILES TOTAL PROJECT	SHEET No.	TOTAL SHEETS
12	Ora	57	16.2/18.6	508	960

REGISTERED CIVIL ENGINEER — DATE 06/17/09

12-14-09
PLANS APPROVAL DATE

REGISTERED PROFESSIONAL ENGINEER — Chien-Tai Yang — No. C 66394 — Exp. 6-30-10 — CIVIL — STATE OF CALIFORNIA

THE STATE OF CALIFORNIA OR ITS OFFICERS OR AGENTS SHALL NOT BE RESPONSIBLE FOR THE ACCURACY OR COMPLETENESS OF SCANNED COPIES OF THIS PLAN SHEET.

ORANGE COUNTY TRANSPORTATION AUTHORITY
550 S. MAIN STREET
ORANGE, CA 92863-1584

EARTH MECHANICS, INC.
17660 NEWHOPE STREET, SUITE E
FOUNTAIN VALLEY, CA 92708

APPARENT DENSITY OF COHESIONLESS SOILS

Description	SPT N_{60} (Blows / 12 inches)
Very loose	0 - 4
Loose	5 - 10
Medium Dense	11 - 30
Dense	31 - 50
Very Dense	> 50

MOISTURE

Description	Criteria
Dry	Absence of moisture, dusty, dry to the touch
Moist	Damp but no visible water
Wet	Visible free water, usually soil is below water table

PERCENT OR PROPORTION OF SOILS

Description	Criteria
Trace	Particles are present but estimated to be less than 5%
Few	5 to 10%
Little	15 to 25%
Some	30 to 45%
Mostly	50 to 100%

PARTICLE SIZE

Description		Size
Boulder		> 12"
Cobble		3" to 12"
Gravel	Coarse	3/4" to 3"
	Fine	No. 4 to 3/4"
Sand	Coarse	No. 10 to No. 4
	Medium	No. 40 to No. 10
	Fine	No. 200 to No. 40

DESIGN OVERSIGHT — Jon Hamaguchi
6-24-09
SIGN OFF DATE

DRAWN BY: J.Fang
CHECKED BY: L.Cheang

FIELD INVESTIGATION BY:
R.Jie

PREPARED FOR THE STATE OF CALIFORNIA DEPARTMENT OF TRANSPORTATION

C.Yang
PROJECT ENGINEER

BRIDGE NO. 55E0079
POST MILES 16.2/18.6

RETAINING WALL NO. 466
LOG OF TEST BORINGS NO. 5

DESIGN GENERAL PLAN SHEET (ENGLISH) (REV. 2/25/05)

ORIGINAL SCALE IN INCHES FOR REDUCED PLANS 0 1 2 3

CU 12
EA 0F0311

DISREGARD PRINTS BEARING EARLIER REVISION DATES

REVISION DATES (PRELIMINARY STAGE ONLY)

SHEET 46 OF 83

FILE => 55e-538-z-466-ltb05.dgn

USERNAME => trrene DATE PLOTTED => 17-DEC-2009 TIME PLOTTED => 10:06

DIST	COUNTY	ROUTE	POST MILES TOTAL PROJECT	SHEET NO.	TOTAL SHEETS
12	Ora	57, 91	15.6/16.6, 5.0/6.7	726	852

REGISTERED PROFESSIONAL ENGINEER

8-26-96
PLANS APPROVAL DATE

REGISTERED PROFESSIONAL ENGINEER LINO CHEANG No. C 41401 Exp. 09-30-99 CIVIL STATE OF CALIFORNIA

EARTH MECHANICS, INC.
Geotechnical & Earthquake Engineering
17660 NEWHOPE STREET, SUITE E • FOUNTAIN VALLEY, CA. 92708
Phone (714) 751-3826

THE STATE OF CALIFORNIA OR ITS OFFICERS OR AGENTS SHALL NOT BE RESPONSIBLE FOR THE ACCURACY OR COMPLETENESS OF ELECTRONIC COPIES OF THIS PLAN SHEET.

DIVISION OF ENGINEERING SERVICES - GEOTECHNICAL SERVICES

As-Built Log of Test Borings sheet is considered an informational document only. As such, the State of California registration seal with signature, license number and registration certificate expiration date confirm that this is a true and accurate copy of the original document. This drawing is available and presented only for the convenience of any bidder, contractor or other interested party.

DIST.	COUNTY	ROUTE	POST MILES -TOTAL PROJECT	Sheet No.	Total Sheets
12	Ora	57	16.2/18.6	509	960

Lino Cheang — 06/17/09
REGISTERED CIVIL ENGINEER — DATE

RETAINING WALL NO. 466

LOG OF TEST BORINGS NO. 6

NOTE: A COPY OF THIS LOG OF TEST BORINGS IS AVAILABLE AT OFFICE OF STRUCTURE MAINTENANCE AND INVESTIGATIONS, SACRAMENTO, CALIFORNIA

CU: 12 EA: 0F0311 — BRIDGE No. 55E0079 — Sheet 47 of 83

To accompany plans dated 12-14-09

REGISTERED PROFESSIONAL ENGINEER LINO C. CHEANG NO. GE 2345 EXP. 9/30/09 GEOTECHNICAL STATE OF CALIFORNIA

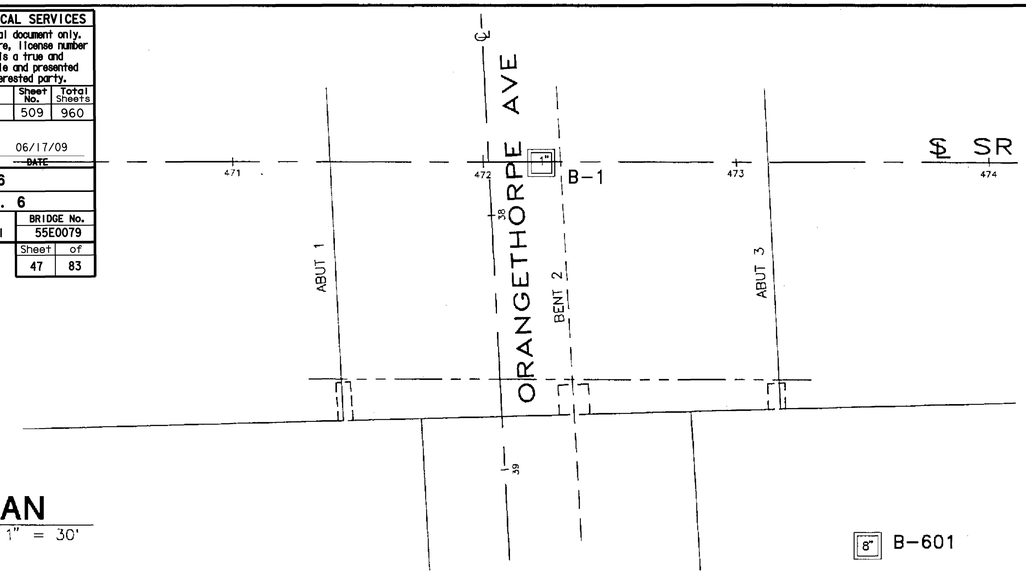

PLAN
SCALE : 1" = 30'

NO AS-BUILT CHANGES

AS BUILT
CORRECTIONS BY AM ALAHMAD
CONTRACT NO. 12-0125 U4
DATE 04-25-00

NOTES:

1. NO GROUNDWATER ENCOUNTERED.
2. ELEVATIONS BASED ON SURVEY BY COAST SURVEYING, INC.
3. BORING B-601 LOGGED BY ENRIQUE RIUTORT, STAFF ENGINEER.
4. BENCHMARK – 57/91-B-88(PM 15.9) –3.5 IN. DIA. CADT STA. MARK DISK SET IN EPOXY ON TOP OF PCC SIDEWALK ON THE NE'LY CORNER OF THE MIRALOMA AVE. BRIDGE OVER RTE-57 FWY, ABOUT 150 FT. E'LY OF ℄ OF RTE-57, 36 FT. N'LY OF ℄ OF MIRALOMA. ELEV. 229.49
5. B-1 TAKEN FROM ORIGINAL CALTRANS LOG OF TEST BORINGS. – (AS-BUILT DATE 7-25-69)

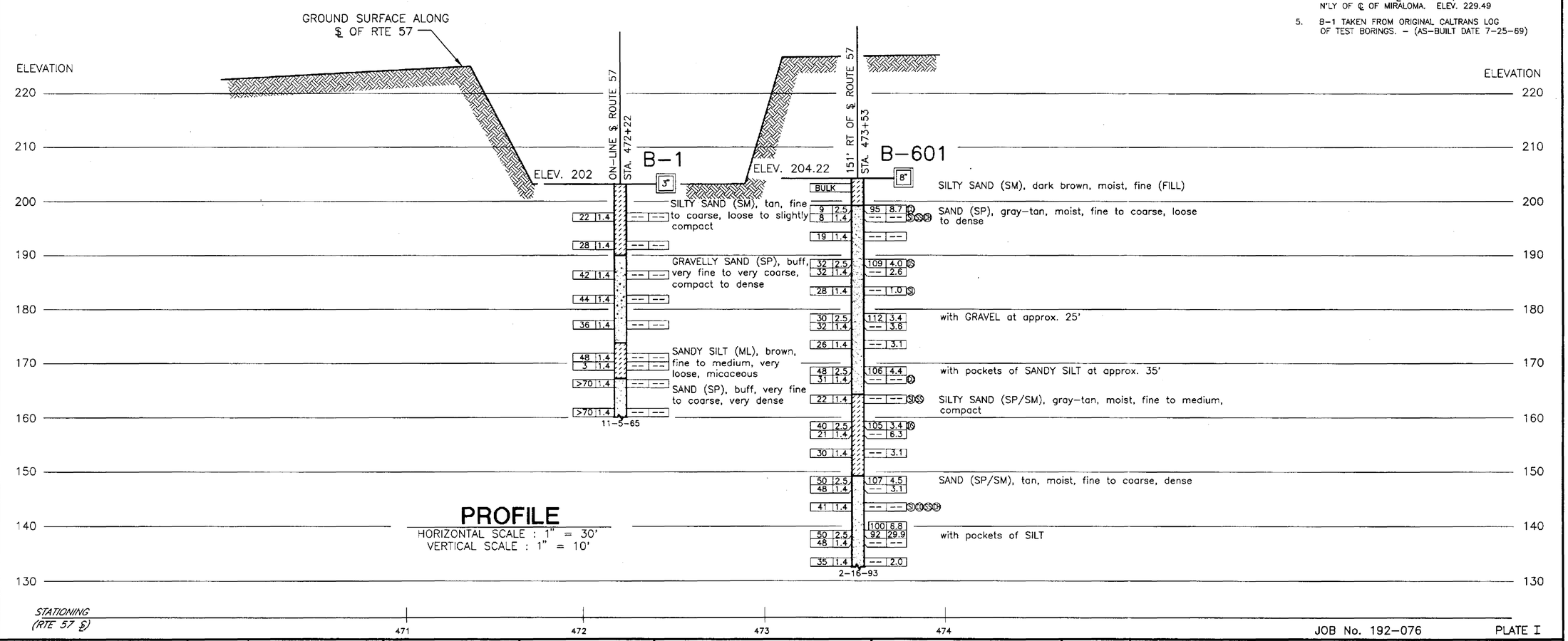

PROFILE
HORIZONTAL SCALE : 1" = 30'
VERTICAL SCALE : 1" = 10'

JOB No. 192-076 PLATE I

LEGEND OF BORING OPERATIONS

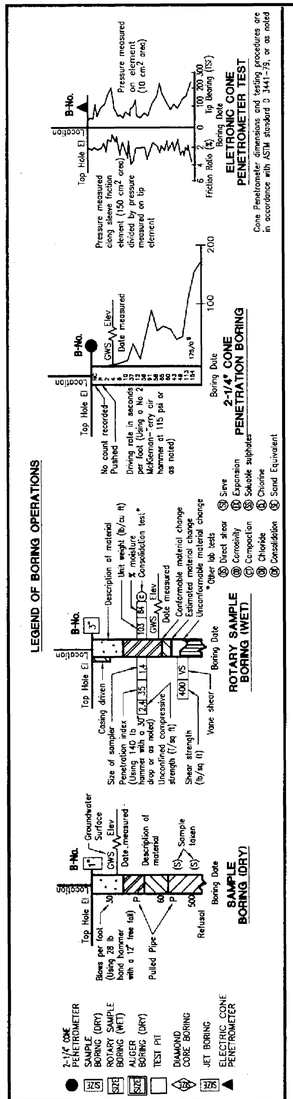

LEGEND OF EARTH MATERIALS

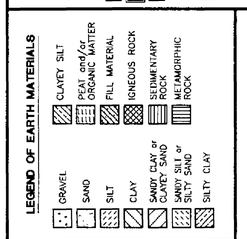

CONSISTENCY CLASSIFICATION FOR SOILS

According to the Standard Penetration Test

Penetration Index (blows/Ft)	Granular	Cohesive
0-4	Very loose	Very soft
5-9	Loose	Soft
10-19	Slightly compact	Stiff
20-34	Compact	Very stiff
35-69	Dense	Hard
>70	Very dense	Very hard

NOTE: Classification of earth material as shown on this sheet is based upon field inspection and is not to be construed to imply mechanical analysis.

BE NGUYEN — DESIGN OVERSIGHT	DRAWN BY: JOE MAGLIATO	E.A. RIUTORT — FIELD INVESTIGATOR	M&T AGRA — Geotechnical and Environmental Services
3-13-96 — SIGN OFF DATE	CHECK BY: E.A. RIUTORT	DATE 2-16-93	

PREPARED FOR THE STATE OF CALIFORNIA DEPARTMENT OF TRANSPORTATION

Y. NIEN WANG — PROJECT ENGINEER

BRIDGE NO. 55-0459 — POST MILE 16.4

ORANGETHORPE AVE UC (WIDEN)
LOG OF TEST BORINGS

ORIGINAL SCALE IN INCHES FOR REDUCED PLANS 0 1 2 3

CU 12209
EA 012501

DISREGARD PRINTS BEARING EARLIER REVISION DATES → 8-24-94 5/24/95

REVISION DATES (PRELIMINARY STAGE ONLY) — SHEET 14 OF 15

FILENAME => 55e-538-z-466-1tb06.tif

The State of California or its officers or agents shall not be responsible for the accuracy or completeness of electronic copies of this plan sheet.

8-26-96
TO ACCOMPANY PLANS DATED

DIST	COUNTY	ROUTE	POST MILES TOTAL PROJECT	SHEET NO.	TOTAL SHEETS
12	Ora	57, 91	15.6/16.6, 5.0/6.7	727	852

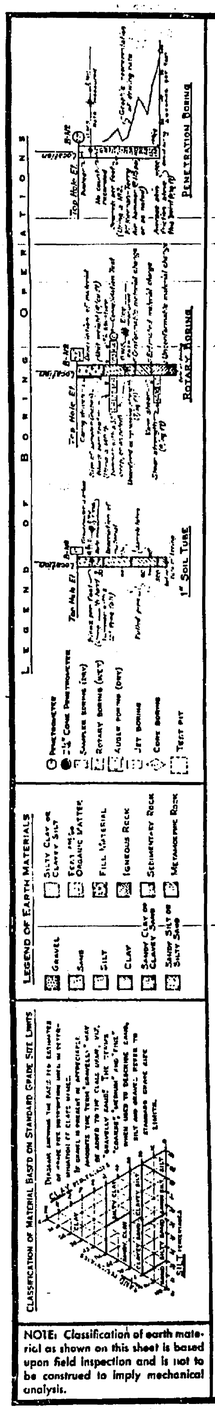

BENCH MARK
BM #472R-E5 Elev 203.41
Set P/S in S. curb Orangethorpe Ave. 194
E. of ℄ Orange Fwy. 100' W of ℄ Nebraska Ave.

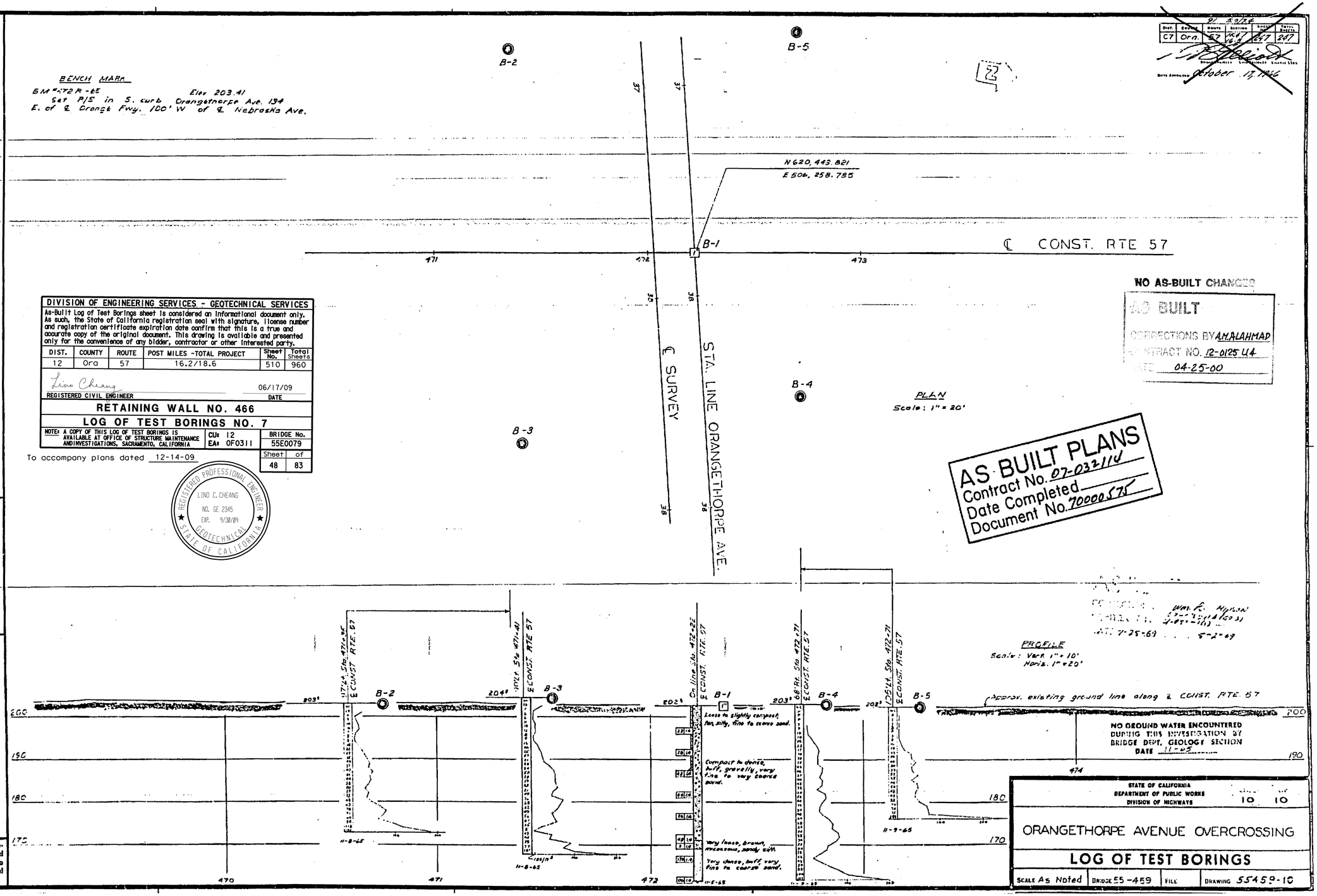

NO AS-BUILT CHANGES

AS BUILT
CORRECTIONS BY A.M. ALAHMAD
CONTRACT NO. 12-0125 U4
DATE 04-25-00

AS-BUILT PLANS
Contract No. 07-032114
Date Completed
Document No. 70000575

DIVISION OF ENGINEERING SERVICES - GEOTECHNICAL SERVICES

As-Built Log of Test Borings sheet is considered an informational document only. As such, the State of California registration seal with signature, license number and registration certificate expiration date confirm that this is a true and accurate copy of the original document. This drawing is available and presented only for the convenience of any bidder, contractor or other interested party.

DIST.	COUNTY	ROUTE	POST MILES -TOTAL PROJECT	Sheet No.	Total Sheets
12	Ora	57	16.2/18.6	510	960

Lino Cheang — REGISTERED CIVIL ENGINEER — DATE 06/17/09

RETAINING WALL NO. 466

LOG OF TEST BORINGS NO. 7

NOTE: A COPY OF THIS LOG OF TEST BORINGS IS AVAILABLE AT OFFICE OF STRUCTURE MAINTENANCE AND INVESTIGATIONS, SACRAMENTO, CALIFORNIA

CU: 12
EA: 0F0311

BRIDGE No. 55E0079

Sheet 48 of 83

To accompany plans dated 12-14-09

REGISTERED PROFESSIONAL ENGINEER — LINO C. CHEANG — NO. GE 2345 — EXP. 9/30/09 — GEOTECHNICAL — STATE OF CALIFORNIA

STATE OF CALIFORNIA
DEPARTMENT OF PUBLIC WORKS
DIVISION OF HIGHWAYS
10 10

ORANGETHORPE AVENUE OVERCROSSING

LOG OF TEST BORINGS

SCALE As Noted | BRIDGE 55-459 | FILE | DRAWING 55459-10

BE NGUYEN
DESIGN OVERSIGHT
SIGNOFF DATE 3-13-96

NOTE:
ADDITIONAL AS-BUILT FOUNDATION DATA MAY BE AVAILABLE AT THE OFFICE OF TRANSPORTATION MATERIALS AND RESEARCH 5900 FOLSOM BOULEVARD, SACRAMENTO, CALIFORNIA 95819

	BY	CHECKED
DESIGN	J. Hueser	D. Kuang
DETAILS	T. Elofson	D. Novak
QUANTITIES	J. Hueser	L. Woo

PREPARED FOR THE STATE OF CALIFORNIA DEPARTMENT OF TRANSPORTATION

Y. Nien Wang
PROJECT ENGINEER

CU 12209
EA 0125U1

BRIDGE No. 55-0459
POST MILE 16.4

ORANGETHORPE AVE UC (WIDEN)
AS-BUILT LOG OF TEST BORINGS

ORIGINAL SCALE IN INCHES FOR REDUCED PLANS 0 1 2 3

DISREGARD PRINTS BEARING EARLIER REVISION DATES

REVISION DATES (PRELIMINARY STAGE ONLY) 5/9/94

SHEET 15 OF 15

FILENAME => 55e-538-z-466-1tb07.tif

Design: Thomas Aug/3/1999/dasilgov/ccbcbsbb.dgn
Plotted On 10-MAY-1994 06
Converted by:USERNAME=*****

DIST.	COUNTY	ROUTE	POST MILES—TOTAL PROJECT	EA07 No.	TOTAL SHEETS
07	ORA	57	16.0/16.4	31	35

Robert W. Reynolds #165
BRIDGE ENGINEERING GEOLOGIST — CERT. ENGINEERING GEOLOGIST NO.
DATE APPROVED July 7, 1980

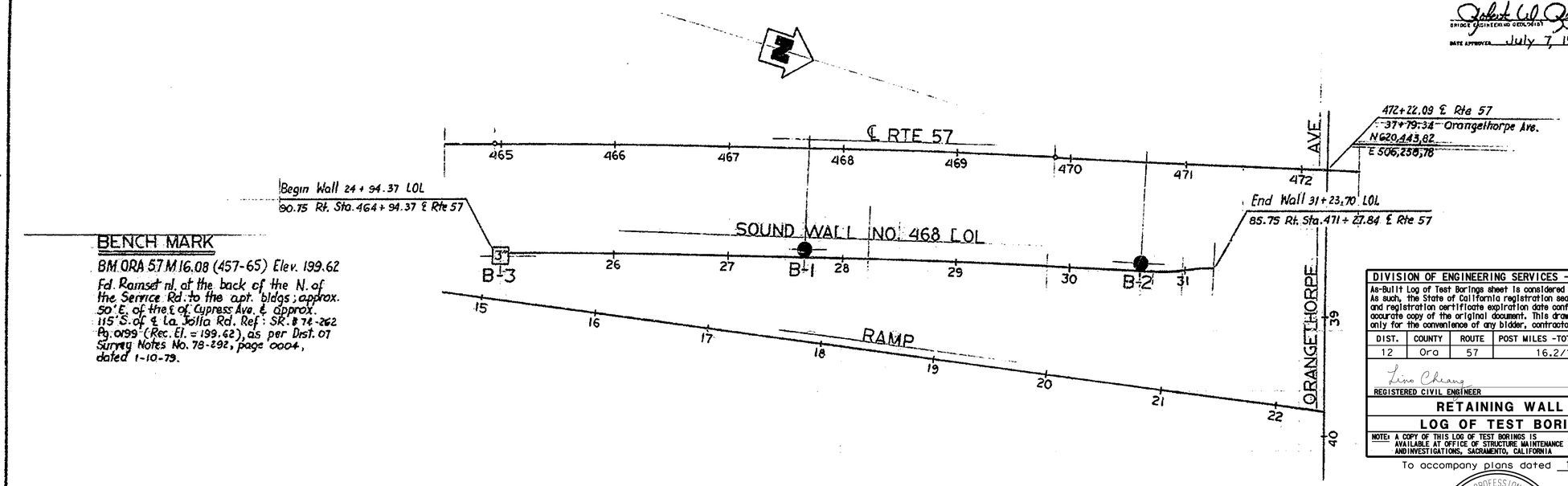

BENCH MARK

BM ORA 57 M16.08 (457-65) Elev. 199.62
Fd. Ramset nl. at the back of the N. of the Service Rd. to the apt. bldgs; approx. 50' E. of the ℄ of Cypress Ave. & approx. 115' S. of ℄ La Jolla Rd. Ref: SR. # 78-262 Pg. 0199 (Rec. El. = 199.62), as per Dist. 07 Survey Notes No. 78-292, page 0004, dated 1-10-79.

NO GROUND WATER ENCOUNTERED DURING THIS INVESTIGATION BY OFFICE OF STRUCTURES GEOLOGIC STUDIES SECTION
DATE 1-8-79

PLAN

1"=50'

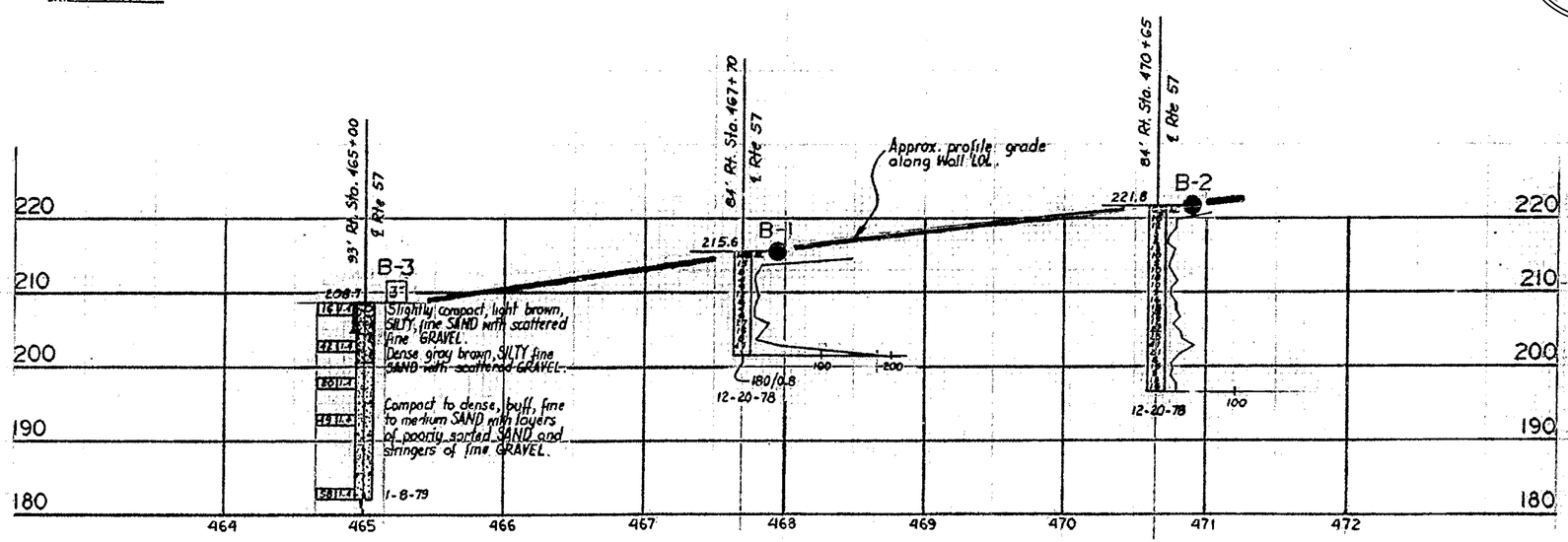

PROFILE

HORIZ. 1"=50'
VERT. 1"=10'

DIVISION OF ENGINEERING SERVICES - GEOTECHNICAL SERVICES					
As-Built Log of Test Borings sheet is considered an informational document only. As such, the State of California registration seal with signature, license number and registration certificate expiration date confirms that this is a true and accurate copy of the original document. This drawing is available and presented only for the convenience of any bidder, contractor or other interested party.					
DIST.	COUNTY	ROUTE	POST MILES -TOTAL PROJECT	Sheet No.	Total Sheets
12	Ora	57	16.2/18.6	511	960
Lino Cheang — REGISTERED CIVIL ENGINEER				06/17/09 — DATE	
RETAINING WALL No. 466					
LOG OF TEST BORINGS No. 8					
NOTE: A COPY OF THIS LOG OF TEST BORINGS IS AVAILABLE AT OFFICE OF STRUCTURE MAINTENANCE AND INVESTIGATIONS, SACRAMENTO, CALIFORNIA			CU: 12 EA: 0F0311	BRIDGE No. 55E0079	
To accompany plans dated 12-14-09				Sheet 49	of 83

REGISTERED PROFESSIONAL ENGINEER — LINO C. CHEANG — NO. GE 2345 — EXP. 9/30/09 — GEOTECHNICAL — STATE OF CALIFORNIA

AS BUILT

NO CORRECTIONS BY P. J. Hixson
CONTRACT NO. 07-438004
DATE 8-1-81 12-2-81 AJC

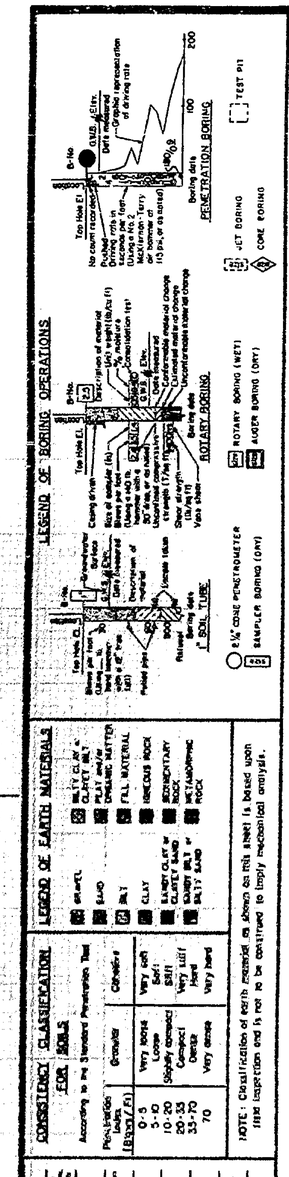

NOTE: Classification of earth materials as shown on this sheet is based upon visual inspection and is not to be construed to imply mechanical analysis.

ENGINEERING GEOLOGY SECTION		
FIELD STUDY	By H.C. CAIN, 1-4-79	Approved Recommended By: ENGINEERING GEOLOGIST
DRAWN	By VICTOR GESTOKAS, 5-4-79	
CHECKED	By L. C. Cheang 5-7-79	CERTIFIED ENGINEERING GEOLOGIST NUMBER 40

State of CALIFORNIA DEPARTMENT OF TRANSPORTATION

OFFICE OF STRUCTURES DESIGN GROUP 7
PROJECT ENGINEER

BRIDGE NO. SPEC. DESIGN 55-0468 RW
POST MILE 15.9/16.4

SOUND WALL NO 468
LOG OF TEST BORINGS

FILENAME => 55e-538-z-466-ltb08.tif

ORIGINAL SCALE IN INCHES FOR REDUCED PLANS 0 1 2 3

CU 07210
WO438001

Disregard prints bearing earlier revision dates

REVISION DATES (PRELIMINARY STAGE ONLY)

SHEET 21 OF 21

CHARDEN 17-JUN-2009 06:58
H:\pdata\10105878\CADD\Struc\Div\Walls\55e-538-z-466-ltb08.dgn

Dist	COUNTY	ROUTE	POST MILES TOTAL PROJECT	SHEET No.	TOTAL SHEETS
12	Ora	57	16.2/18.6	512	960

REGISTERED CIVIL ENGINEER — DATE 06/17/09

12-14-09
PLANS APPROVAL DATE

REGISTERED PROFESSIONAL ENGINEER — Chien-Tai Yang — No. C 66394 — Exp. 6-30-10 — CIVIL — STATE OF CALIFORNIA

THE STATE OF CALIFORNIA OR ITS OFFICERS OR AGENTS SHALL NOT BE RESPONSIBLE FOR THE ACCURACY OR COMPLETENESS OF SCANNED COPIES OF THIS PLAN SHEET.

ORANGE COUNTY TRANSPORTATION AUTHORITY
550 S. MAIN STREET
ORANGE, CA 92863-1584

EARTH MECHANICS, INC.
17660 NEWHOPE STREET, SUITE E
FOUNTAIN VALLEY, CA 92708

BENCHMARKS:

Vertical Datum NAVD 88

Designation: 1L-54-82 Elev = 153.171
Described by OCS 2002 - Found 3¾" OCS Aluminum Benchmark Disk Stamped "1L-54-82", set in the Top of a 6 in. by 6 in. Concrete Post. Monument is located along the Westerly Levee of the Santa Ana River, 0.25 Miles Northerly along Levee from the Centerline of Orangewood Avenue, 200 ft. Northeasterly of the Easterly Leg of the Anaheim Angels 200 ft. tall sign, 69 ft. Westerly of the Centerline of the Bike Trail and 1.5 ft. Westerly of a Steel OCS Witness Post. Monument is set 0.3 below the Ground.

Designation: 2G-25-70 Elev = 275.872
Described by OCS 2003 - Found 3¾" OCS Aluminum Benchmark Disk Stamped "2G-25-70", set in the Southeasterly Corner of a 4 ft by 6 ft Concrete Catch Basin. Monument is Located in the Northwesterly Corner of the Intersection of Yorba Linda Boulevard and Deerpark Drive, 75 ft Westerly of the Centerline of Deerpark and 46 ft Northerly of the Centerline of Yorba Linda. Monument is set Level with the Sidewalk.

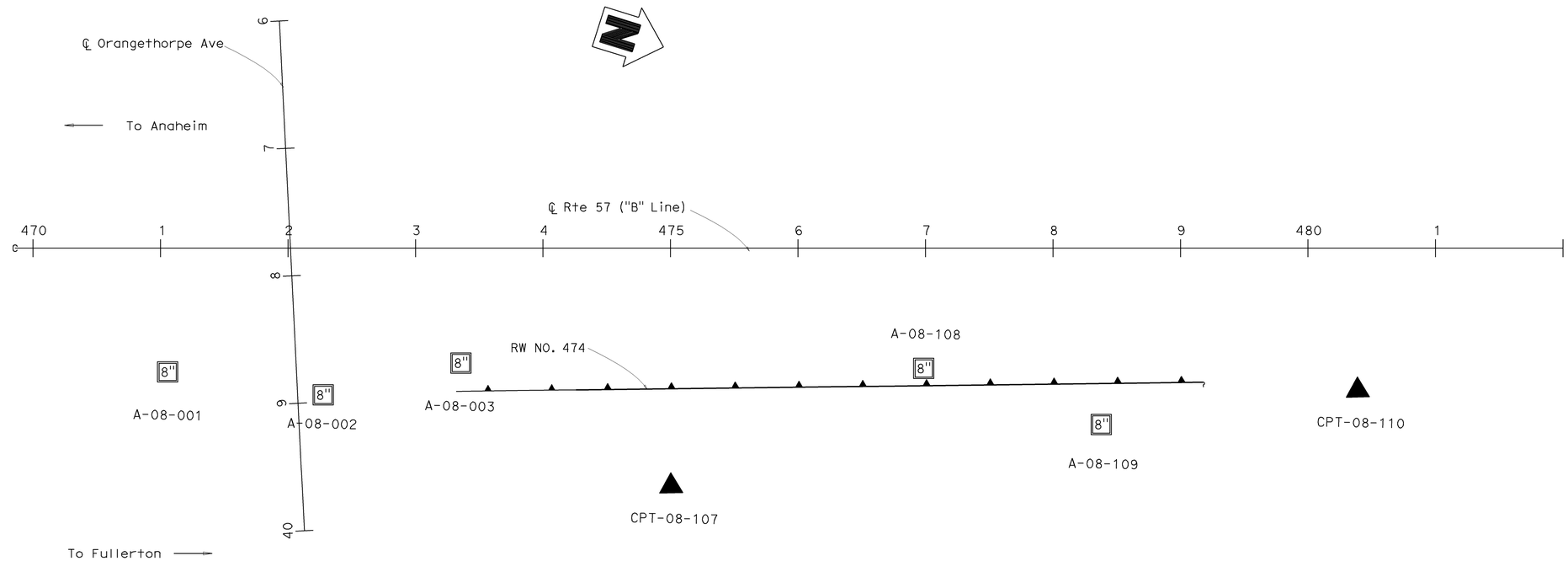

PLAN
1" = 50'

DESIGN OVERSIGHT Jon Hamaguchi — 6-24-09 SIGN OFF DATE	DRAWN BY: J.Fang CHECKED BY: L.Cheang	FIELD INVESTIGATION BY: R.Jie	PREPARED FOR THE STATE OF CALIFORNIA DEPARTMENT OF TRANSPORTATION	C. Yang PROJECT ENGINEER	BRIDGE NO. 55E0080 POST MILES 16.2/18.6

RETAINING WALL NO. 474
LOG OF TEST BORINGS NO. 1

DESIGN GENERAL PLAN SHEET (ENGLISH) (REV. 2/25/05)

ORIGINAL SCALE IN INCHES FOR REDUCED PLANS 0 1 2 3

CU 12
EA 0F0311

DISREGARD PRINTS BEARING EARLIER REVISION DATES

REVISION DATES (PRELIMINARY STAGE ONLY): 4/30/09

SHEET 50 OF 83

FILE => 55e-538-z-474-ltb01.dgn

USERNAME => ttrene DATE PLOTTED => 17-DEC-2009 TIME PLOTTED => 10:06

Dist	COUNTY	ROUTE	POST MILES TOTAL PROJECT	SHEET No.	TOTAL SHEETS
12	Ora	57	16.2/18.6	513	960

REGISTERED CIVIL ENGINEER — DATE 06/17/09

12-14-09
PLANS APPROVAL DATE

REGISTERED PROFESSIONAL ENGINEER — Chien-Tai Yang — No. C 66394 — Exp. 6-30-10 — CIVIL — STATE OF CALIFORNIA

THE STATE OF CALIFORNIA OR ITS OFFICERS OR AGENTS SHALL NOT BE RESPONSIBLE FOR THE ACCURACY OR COMPLETENESS OF SCANNED COPIES OF THIS PLAN SHEET.

ORANGE COUNTY TRANSPORTATION AUTHORITY
550 S. MAIN STREET
ORANGE, CA 92863-1584

EARTH MECHANICS, INC.
17660 NEWHOPE STREET, SUITE E
FOUNTAIN VALLEY, CA 92708

FOR PLAN VIEW SEE "RETAINING WALL NO. 474, LOG OF TEST BORINGS NO. 1"

NOTES:

(1) This LOTB sheet was prepared in accordance with the Caltrans Soil and Rock Logging, Classification and Presentation Manual (June 2007)

(2) 2.4" samples were taken using a California Modified Sampler.

(3) An automatic trip hammer system consisting of a hammer weight of 140 lbs falling a distance of 30" was used to advance the drive sampler.

(4) Conversion factor from 2.4" Modified California Ring Sampler blowcounts to Standard Penetration Test (SPT) blowcounts is 0.5.

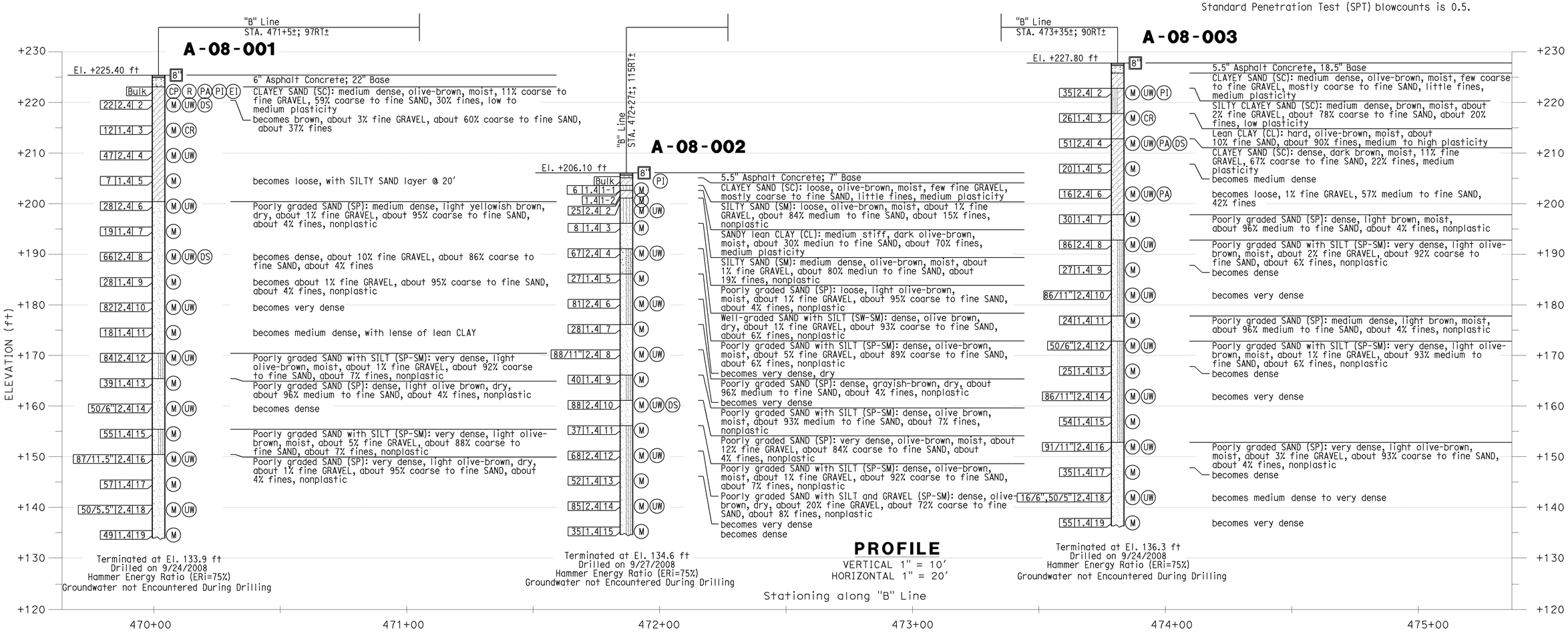

DESIGN OVERSIGHT Jon Hamaguchi — 6-24-09 SIGN OFF DATE	DRAWN BY: J.Fang CHECKED BY: L.Cheang	FIELD INVESTIGATION BY: R.Jie	PREPARED FOR THE STATE OF CALIFORNIA DEPARTMENT OF TRANSPORTATION	C. Yang PROJECT ENGINEER

BRIDGE NO. 55E0080 — POST MILES 16.2/18.6

RETAINING WALL NO. 474
LOG OF TEST BORINGS NO. 2

DESIGN GENERAL PLAN SHEET (ENGLISH) (REV. 2/25/05)

ORIGINAL SCALE IN INCHES FOR REDUCED PLANS 0 1 2 3

CU 12
EA 0F0311

DISREGARD PRINTS BEARING EARLIER REVISION DATES — REVISION DATES (PRELIMINARY STAGE ONLY) 4/30/09

SHEET 51 OF 83

FILE => 55e-538-z-474-ltb02.dgn

USERNAME => trrene DATE PLOTTED => 17-DEC-2009 TIME PLOTTED => 10:06

Dist	COUNTY	ROUTE	POST MILES TOTAL PROJECT	SHEET No.	TOTAL SHEETS
12	Ora	57	16.2/18.6	514	960

REGISTERED CIVIL ENGINEER 06/17/09 DATE

12-14-09
PLANS APPROVAL DATE

REGISTERED PROFESSIONAL ENGINEER Chien-Tai Yang No. C 66394 Exp. 6-30-10 CIVIL STATE OF CALIFORNIA

THE STATE OF CALIFORNIA OR ITS OFFICERS OR AGENTS SHALL NOT BE RESPONSIBLE FOR THE ACCURACY OR COMPLETENESS OF SCANNED COPIES OF THIS PLAN SHEET.

ORANGE COUNTY TRANSPORTATION AUTHORITY
550 S. MAIN STREET
ORANGE, CA 92863-1584

EARTH MECHANICS, INC.
17660 NEWHOPE STREET, SUITE E
FOUNTAIN VALLEY, CA 92708

FOR PLAN VIEW SEE "RETAINING WALL NO. 474, LOG OF TEST BORINGS NO. 1"

NOTES:

(1) This LOTB sheet was prepared in accordance with the Caltrans Soil and Rock Logging, Classification and Presentation Manual (June 2007)
(2) 2.4" samples were taken using a California Modified Sampler.
(3) An automatic trip hammer system consisting of a hammer weight of 140 lbs falling a distance of 30" was used to advance the drive sampler.
(4) Conversion factor from 2.4" Modified California Ring Sampler blowcounts to Standard Penetration Test (SPT) blowcounts is 0.5.

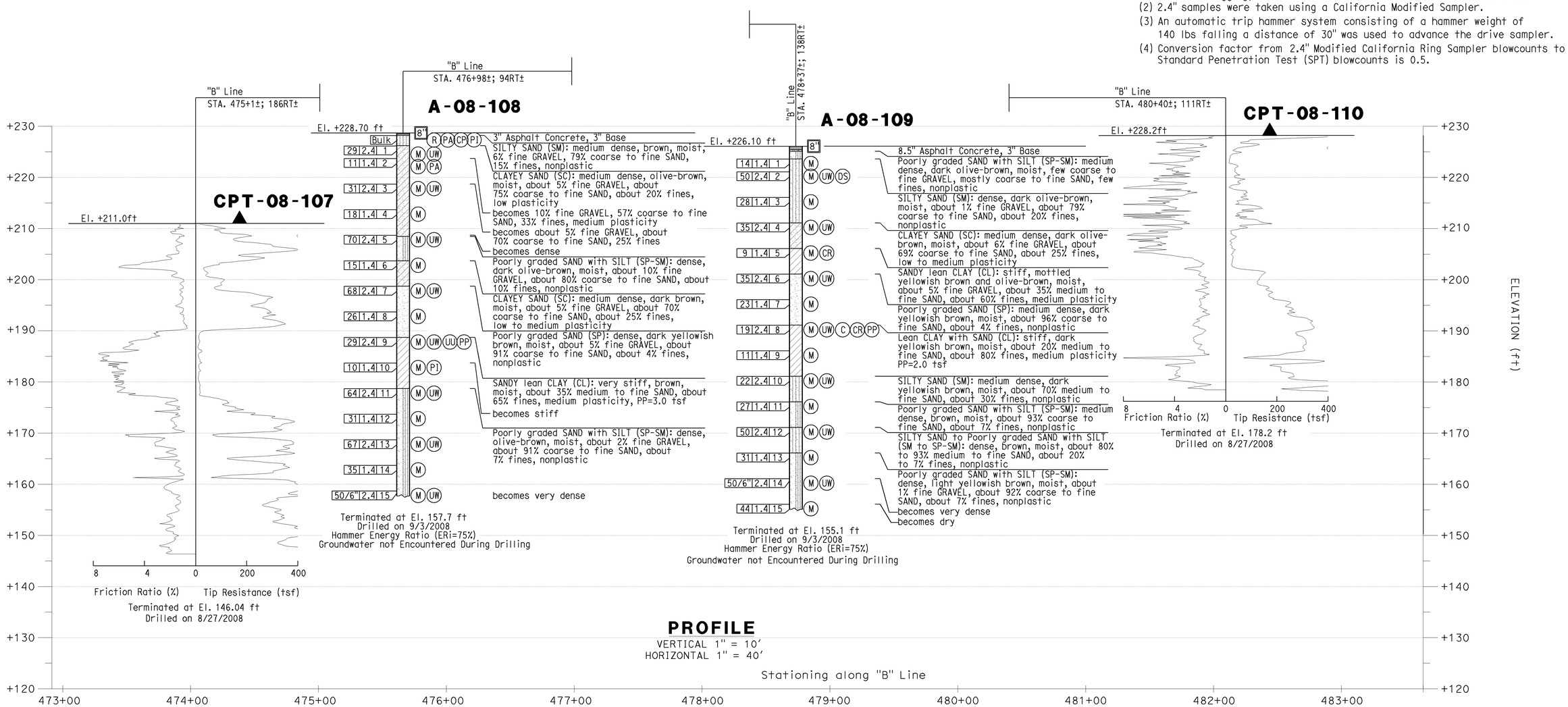

PROFILE

VERTICAL 1" = 10'
HORIZONTAL 1" = 40'

DESIGN OVERSIGHT Jon Hamaguchi 6-24-09 SIGN OFF DATE	DRAWN BY: J.Fang CHECKED BY: L.Cheang	FIELD INVESTIGATION BY: R.Jie	PREPARED FOR THE STATE OF CALIFORNIA DEPARTMENT OF TRANSPORTATION	C.Yang PROJECT ENGINEER	BRIDGE NO. 55E0080 POST MILES 16.2/18.6

RETAINING WALL No. 474
LOG OF TEST BORINGS NO. 3

DESIGN GENERAL PLAN SHEET (ENGLISH) (REV. 2/25/05)

ORIGINAL SCALE IN INCHES FOR REDUCED PLANS 0 1 2 3

CU 12
EA 0F0311

DISREGARD PRINTS BEARING EARLIER REVISION DATES

REVISION DATES (PRELIMINARY STAGE ONLY) 4/30/09

SHEET 52 OF 83

FILE => 55e-538-z-474-ltb03.dgn

USERNAME => trrene DATE PLOTTED => 17-DEC-2009 TIME PLOTTED => 10:06

Dist	COUNTY	ROUTE	POST MILES TOTAL PROJECT	SHEET No.	TOTAL SHEETS
12	Ora	57	16.2/18.6	515	960

REGISTERED CIVIL ENGINEER — DATE 06/17/09

12-14-09
PLANS APPROVAL DATE

REGISTERED PROFESSIONAL ENGINEER — Chien-Tai Yang — No. C 66394 — Exp. 6-30-10 — CIVIL — STATE OF CALIFORNIA

THE STATE OF CALIFORNIA OR ITS OFFICERS OR AGENTS SHALL NOT BE RESPONSIBLE FOR THE ACCURACY OR COMPLETENESS OF SCANNED COPIES OF THIS PLAN SHEET.

ORANGE COUNTY TRANSPORTATION AUTHORITY
550 S. MAIN STREET
ORANGE, CA 92863-1584

EARTH MECHANICS, INC.
17660 NEWHOPE STREET, SUITE E
FOUNTAIN VALLEY, CA 92708

REFERENCE: CALTRANS SOIL & ROCK LOGGING, CLASSIFICATION, AND PRESENTATION MANUAL (JUNE 2007)

CEMENTATION

Description	Criteria
Weak	Crumbles or breaks with handling or little finger pressure.
Moderate	Crumbles or breaks with considerable finger pressure.
Strong	Will not crumble or break with finger pressure.

CONSISTENCY OF COHESIVE SOILS

Description	Unconfined Compressive Strength (tsf)	Pocket Penetrometer Measurement (tsf)	Torvane Measurement (tsf)	Field Approximation
Very Soft	< 0.25	< 0.25	< 0.12	Easily penetrated several inches by fist
Soft	0.25 to 0.50	0.25 to 0.50	0.12 to 0.25	Easily penetrated several inches by thumb
Medium Stiff	0.50 to 1.0	0.50 to 1.0	0.25 to 0.50	Penetrated several inches by thumb with moderate effort
Stiff	1 to 2	1 to 2	0.50 to 1.0	Readily indented by thumb but penetrated only with great effort
Very Stiff	2 to 4	2 to 4	1.0 to 2.0	Readily indented by thumbnail
Hard	> 4.0	> 4.0	> 2.0	Indented by thumbnail with difficulty

BOREHOLE IDENTIFICATION

Symbol	Hole Type	Description
Size	A	Auger Boring
Size	R P	Rotary drilled boring Rotary percussion boring (air)
Size	R	Rotary drilled diamond core
Size	HD HA	Hand driven (1-inch soil tube) Hand Auger
●	D	Dynamic Cone Penetration Boring
▲	CPT	Cone Penetration Test (ASTM D 5778-95)
⬚	O	Other

Note: Size in inches.

PLASTICITY OF FINE-GRAINED SOILS

Description	Criteria
Nonplastic	A 1/8-inch thread cannot be rolled at any water content.
Low	The thread can barely be rolled and the lump cannot be formed when drier than the plastic limit.
Medium	The thread is easy to roll and not much time is required to reach the plastic limit. The thread cannot be rerolled after reaching the plastic limit. The lump crumbles when drier than the plastic limit.
High	It takes considerable time rolling and kneading to reach the plastic limit. The thread can be rerolled several times after reaching the plastic limit. The lump can be formed without crumbling when drier than the plastic limit.

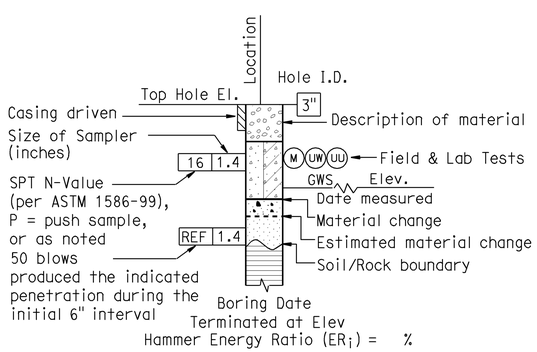

ROTARY BORING

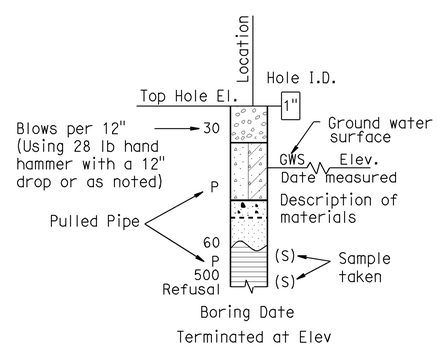

HAND BORING

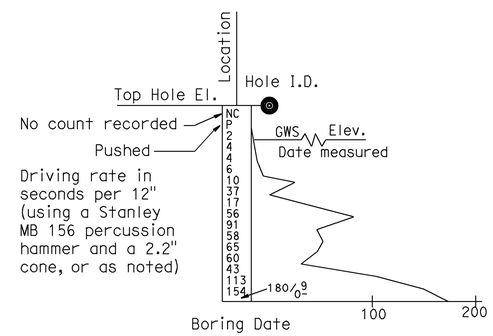

DYNAMIC CONE PENETRATION BORING

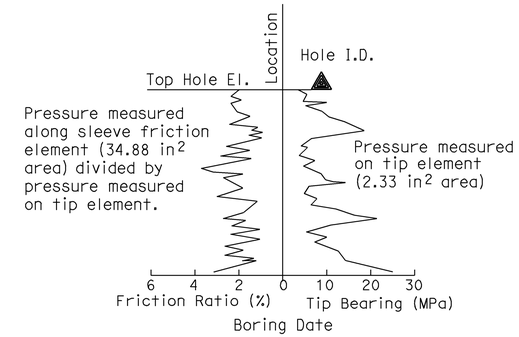

CONE PENETRATION TEST (CPT) SOUNDING

DESIGN OVERSIGHT — Jon Hamaguchi
6-24-09
SIGN OFF DATE

DRAWN BY: J.Fang
CHECKED BY: L.Cheang

FIELD INVESTIGATION BY:
R.Jie

PREPARED FOR THE STATE OF CALIFORNIA DEPARTMENT OF TRANSPORTATION

C.Yang
PROJECT ENGINEER

BRIDGE NO. 55E0080
POST MILES 16.2/18.6

RETAINING WALL NO. 474
LOG OF TEST BORINGS NO. 4

DESIGN GENERAL PLAN SHEET (ENGLISH) (REV. 2/25/05)

ORIGINAL SCALE IN INCHES FOR REDUCED PLANS 0 1 2 3

CU 12
EA 0F0311

DISREGARD PRINTS BEARING EARLIER REVISION DATES

REVISION DATES (PRELIMINARY STAGE ONLY)

SHEET 53 OF 83

FILE => 55e-538-z-474-ltb04.dgn

USERNAME => trrene DATE PLOTTED => 17-DEC-2009 TIME PLOTTED => 10:06

REFERENCE: CALTRANS SOIL & ROCK LOGGING, CLASSIFICATION, AND PRESENTATION MANUAL (JUNE 2007)

GROUP SYMBOLS AND NAMES

Graphic/Symbol	Group Names
GW	Well-graded GRAVEL Well-graded GRAVEL with SAND
GP	Poorly graded GRAVEL Poorly graded GRAVEL with SAND
GW-GM	Well-graded GRAVEL with SILT Well-graded GRAVEL with SILT and SAND
GW-GC	Well-graded GRAVEL with CLAY (or SILTY CLAY) Well-graded GRAVEL with CLAY and SAND (or SILTY CLAY and SAND)
GP-GM	Poorly graded GRAVEL with SILT Poorly graded GRAVEL with SILT and SAND
GP-GC	Poorly graded GRAVEL with CLAY (or SILTY CLAY) Poorly graded GRAVEL with CLAY and SAND (or SILTY CLAY and SAND)
GM	SILTY GRAVEL SILTY GRAVEL with SAND
GC	CLAYEY GRAVEL CLAYEY GRAVEL with SAND
GC-GM	SILTY, CLAYEY GRAVEL SILTY, CLAYEY GRAVEL with SAND
SW	Well-graded SAND Well-graded SAND with GRAVEL
SP	Poorly graded SAND Poorly graded SAND with GRAVEL
SW-SM	Well-graded SAND with SILT Well-graded SAND with SILT and GRAVEL
SW-SC	Well-graded SAND with CLAY (or SILTY CLAY) Well-graded SAND with CLAY and GRAVEL (or SILTY CLAY and GRAVEL)
SP-SM	Poorly graded SAND with SILT Poorly graded SAND with SILT and GRAVEL
SP-SC	Poorly graded SAND with CLAY (or SILTY CLAY) Poorly graded SAND with CLAY and GRAVEL (or SILTY CLAY and GRAVEL)
SM	SILTY SAND SILTY SAND with GRAVEL
SC	CLAYEY SAND CLAYEY SAND with GRAVEL
SC-SM	SILTY, CLAYEY SAND SILTY, CLAYEY SAND with GRAVEL
PT	PEAT
	COBBLES COBBLES and BOULDERS BOULDERS

Graphic/Symbol	Group Names
CL	Lean CLAY Lean CLAY with SAND Lean CLAY with GRAVEL SANDY lean CLAY SANDY lean CLAY with GRAVEL GRAVELLY lean CLAY GRAVELLY lean CLAY with SAND
CL-ML	SILTY CLAY SILTY CLAY with SAND SILTY CLAY with GRAVEL SANDY SILTY CLAY SANDY SILTY CLAY with GRAVEL GRAVELLY SILTY CLAY GRAVELLY SILTY CLAY with SAND
ML	SILT SILT with SAND SILT with GRAVEL SANDY SILT SANDY SILT with GRAVEL GRAVELLY SILT GRAVELLY SILT with SAND
OL	ORGANIC lean CLAY ORGANIC lean CLAY with SAND ORGANIC lean CLAY with GRAVEL SANDY ORGANIC lean CLAY SANDY ORGANIC lean CLAY with GRAVEL GRAVELLY ORGANIC lean CLAY GRAVELLY ORGANIC lean CLAY with SAND
OL	ORGANIC SILT ORGANIC SILT with SAND ORGANIC SILT with GRAVEL SANDY ORGANIC SILT SANDY ORGANIC SILT with GRAVEL GRAVELLY ORGANIC SILT GRAVELLY ORGANIC SILT with SAND
CH	Fat CLAY Fat CLAY with SAND Fat CLAY with GRAVEL SANDY fat CLAY SANDY fat CLAY with GRAVEL GRAVELLY fat CLAY GRAVELLY fat CLAY with SAND
MH	Elastic SILT Elastic SILT with SAND Elastic SILT with GRAVEL SANDY elastic SILT SANDY elastic SILT with GRAVEL GRAVELLY elastic SILT GRAVELLY elastic SILT with SAND
OH	ORGANIC fat CLAY ORGANIC fat CLAY with SAND ORGANIC fat CLAY with GRAVEL SANDY ORGANIC fat CLAY SANDY ORGANIC fat CLAY with GRAVEL GRAVELLY ORGANIC fat CLAY GRAVELLY ORGANIC fat CLAY with SAND
OH	ORGANIC elastic SILT ORGANIC elastic SILT with SAND ORGANIC elastic SILT with GRAVEL SANDY ORGANIC elastic SILT SANDY ORGANIC elastic SILT with GRAVEL GRAVELLY ORGANIC elastic SILT GRAVELLY ORGANIC elastic SILT with SAND
OL/OH	ORGANIC SOIL ORGANIC SOIL with SAND ORGANIC SOIL with GRAVEL SANDY ORGANIC SOIL SANDY ORGANIC SOIL with GRAVEL GRAVELLY ORGANIC SOIL GRAVELLY ORGANIC SOIL with SAND

FIELD AND LABORATORY TESTING

- (C) Consolidation (ASTM D 2435)
- (CL) Collapse Potential (ASTM D 5333)
- (CP) Compaction Curve (CTM 216)
- (CR) Corrosivity Testing (CTM 643, CTM 422, CTM 417)
- (CU) Consolidated Undrained Triaxial (ASTM D 4767)
- (DS) Direct Shear (ASTM D 3080)
- (EI) Expansion Index (ASTM D 4829)
- (M) Moisture Content (ASTM D 2216)
- (OC) Organic Content-% (ASTM D 2974)
- (P) Permeability (CTM 220)
- (PA) Particle Size Analysis (ASTM D 422)
- (PI) Plasticity Index (AASHTO T 90) Liquid Limit (AASHTO T 89)
- (PL) Point Load Index (ASTM D 5731)
- (PM) Pressure Meter
- (PP) Pocket Penetrometer
- (R) R-Value (CTM 301)
- (SE) Sand Equivalent (CTM 217)
- (SG) Specific Gravity (AASHTO T 100)
- (SL) Shrinkage Limit (ASTM D 427)
- (SW) Swell Potential (ASTM D 4546)
- (TV) Pocket Torvane
- (UC) Unconfined Compression-Soil (ASTM D 2166) Unconfined Compression-Rock (ASTM D 2938)
- (UU) Unconsolidated Undrained Triaxial (ASTM D 2850)
- (UW) Unit Weight (ASTM D 4767)
- (VS) Vane Shear (AASHTO T 223)

Dist	COUNTY	ROUTE	POST MILES TOTAL PROJECT	SHEET No.	TOTAL SHEETS
12	Ora	57	16.2/18.6	516	960

REGISTERED CIVIL ENGINEER — DATE 06/17/09

12-14-09
PLANS APPROVAL DATE

REGISTERED PROFESSIONAL ENGINEER — Chien-Tai Yang — No. C 66394 — Exp. 6-30-10 — CIVIL — STATE OF CALIFORNIA

THE STATE OF CALIFORNIA OR ITS OFFICERS OR AGENTS SHALL NOT BE RESPONSIBLE FOR THE ACCURACY OR COMPLETENESS OF SCANNED COPIES OF THIS PLAN SHEET.

ORANGE COUNTY TRANSPORTATION AUTHORITY
550 S. MAIN STREET
ORANGE, CA 92863-1584

EARTH MECHANICS, INC.
17660 NEWHOPE STREET, SUITE E
FOUNTAIN VALLEY, CA 92708

APPARENT DENSITY OF COHESIONLESS SOILS

Description	SPT N_{60} (Blows / 12 inches)
Very loose	0 - 4
Loose	5 - 10
Medium Dense	11 - 30
Dense	31 - 50
Very Dense	> 50

MOISTURE

Description	Criteria
Dry	Absence of moisture, dusty, dry to the touch
Moist	Damp but no visible water
Wet	Visible free water, usually soil is below water table

PERCENT OR PROPORTION OF SOILS

Description	Criteria
Trace	Particles are present but estimated to be less than 5%
Few	5 to 10%
Little	15 to 25%
Some	30 to 45%
Mostly	50 to 100%

PARTICLE SIZE

Description		Size
Boulder		> 12"
Cobble		3" to 12"
Gravel	Coarse	3/4" to 3"
	Fine	No. 4 to 3/4"
Sand	Coarse	No. 10 to No. 4
	Medium	No. 40 to No. 10
	Fine	No. 200 to No. 40

DESIGN OVERSIGHT Jon Hamaguchi
6-24-09
SIGN OFF DATE

DRAWN BY: J.Fang
CHECKED BY: L.Cheang

FIELD INVESTIGATION BY:
R.Jie

PREPARED FOR THE STATE OF CALIFORNIA DEPARTMENT OF TRANSPORTATION

C.Yang
PROJECT ENGINEER

BRIDGE NO. 55E0080
POST MILES 16.2/18.6

RETAINING WALL NO. 474
LOG OF TEST BORINGS NO. 5

DESIGN GENERAL PLAN SHEET (ENGLISH) (REV. 2/25/05)

ORIGINAL SCALE IN INCHES FOR REDUCED PLANS 0 1 2 3

CU 12
EA 0F0311

DISREGARD PRINTS BEARING EARLIER REVISION DATES

REVISION DATES (PRELIMINARY STAGE ONLY)

SHEET 54 OF 83

FILE => 55e-538-z-474-ltb05.dgn

USERNAME => trrene DATE PLOTTED => 17-DEC-2009 TIME PLOTTED => 10:07

DIST	COUNTY	ROUTE	POST MILES TOTAL PROJECT	SHEET NO.	TOTAL SHEETS
12	Ora	57, 91	15.6/16.6, 5.0/6.7	726	852

REGISTERED PROFESSIONAL ENGINEER

8-26-96
PLANS APPROVAL DATE

REGISTERED PROFESSIONAL ENGINEER LINO CHEANG No. C 41401 Exp. 09-30-99 CIVIL STATE OF CALIFORNIA

EARTH MECHANICS, INC.
Geotechnical & Earthquake Engineering
17660 NEWHOPE STREET, SUITE E • FOUNTAIN VALLEY, CA. 92708
Phone (714) 751-3826

THE STATE OF CALIFORNIA OR ITS OFFICERS OR AGENTS SHALL NOT BE RESPONSIBLE FOR THE ACCURACY OR COMPLETENESS OF ELECTRONIC COPIES OF THIS PLAN SHEET.

DIVISION OF ENGINEERING SERVICES - GEOTECHNICAL SERVICES

As-Built Log of Test Borings sheet is considered an informational document only. As such, the State of California registration seal with signature, license number and registration certificate expiration date confirm that this is a true and accurate copy of the original document. This drawing is available and presented only for the convenience of any bidder, contractor or other interested party.

DIST.	COUNTY	ROUTE	POST MILES -TOTAL PROJECT	Sheet No.	Total Sheets
12	Ora	57	16.2/18.6	517	960

REGISTERED CIVIL ENGINEER — DATE 06/17/09

RETAINING WALL NO. 474

LOG OF TEST BORINGS NO. 6

NOTE: A COPY OF THIS LOG OF TEST BORINGS IS AVAILABLE AT OFFICE OF STRUCTURE MAINTENANCE AND INVESTIGATIONS, SACRAMENTO, CALIFORNIA

CU: 12 EA: 0F0311 — BRIDGE No. 55E0080 — Sheet 55 of 83

To accompany plans dated 12-14-09

REGISTERED PROFESSIONAL ENGINEER LINO C. CHEANG NO. GE 2345 EXP. 9/30/09 GEOTECHNICAL STATE OF CALIFORNIA

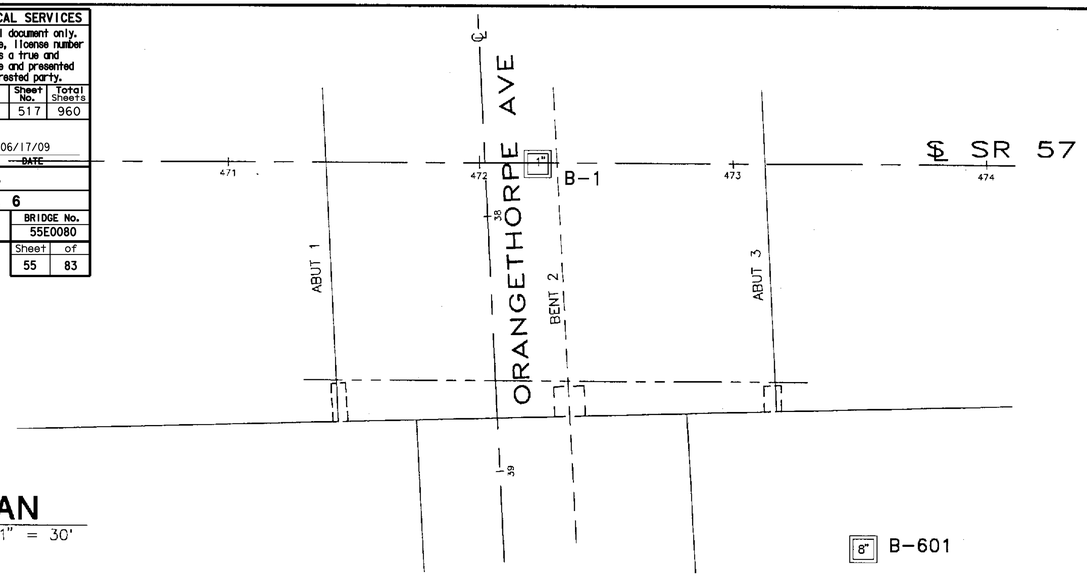

PLAN
SCALE : 1" = 30'

NO AS-BUILT CHANGES

AS BUILT
CORRECTIONS BY AH ALAHMAD
CONTRACT NO. 12-0125 U4
DATE 04-25-00

NOTES:

1. NO GROUNDWATER ENCOUNTERED.
2. ELEVATIONS BASED ON SURVEY BY COAST SURVEYING, INC.
3. BORING B-601 LOGGED BY ENRIQUE RIUTORT, STAFF ENGINEER.
4. BENCHMARK – 57/91-B-88(PM 15.9) –3.5 IN. DIA. CADT STA. MARK DISK SET IN EPOXY ON TOP OF PCC SIDEWALK ON THE NE'LY CORNER OF THE MIRALOMA AVE. BRIDGE OVER RTE-57 FWY, ABOUT 150 FT. E'LY OF ℄ OF RTE-57, 36 FT. N'LY OF ℄ OF MIRALOMA. ELEV. 229.49
5. B-1 TAKEN FROM ORIGINAL CALTRANS LOG OF TEST BORINGS. – (AS-BUILT DATE 7-25-69)

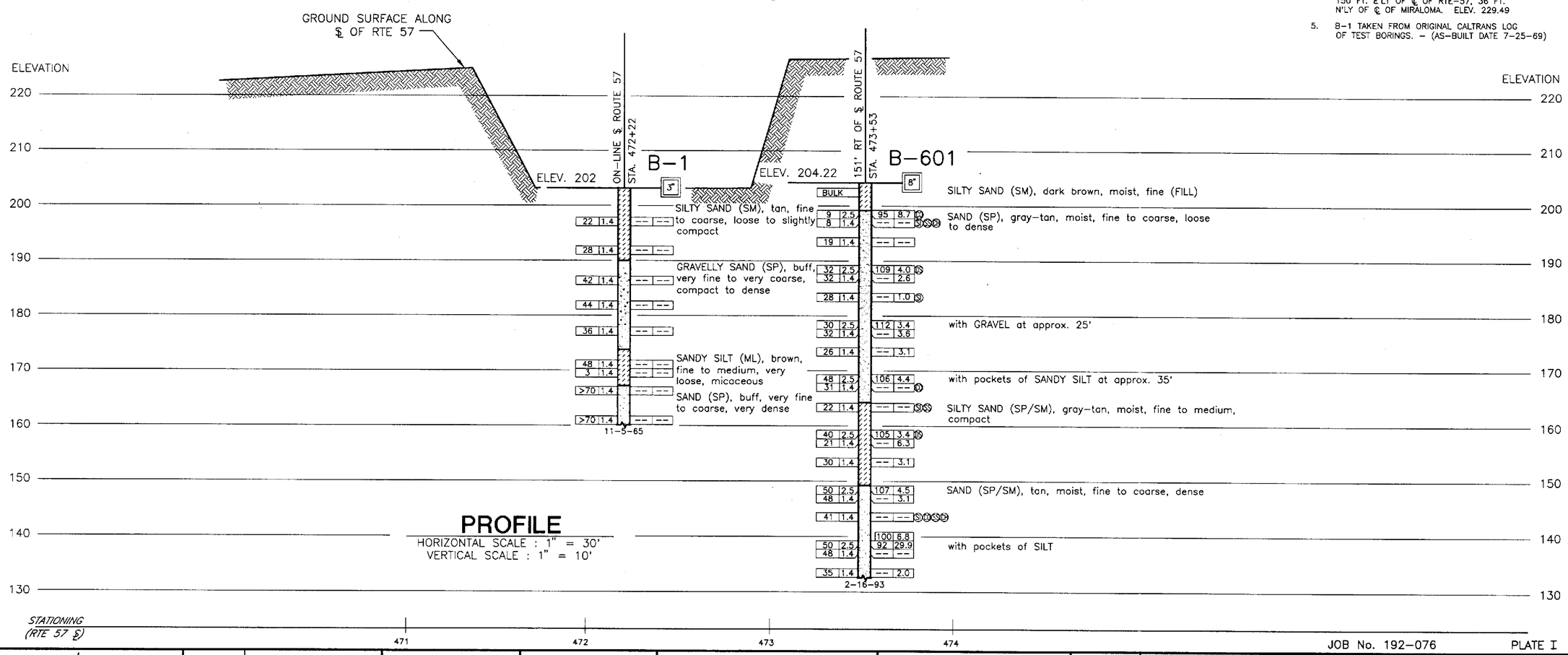

PROFILE
HORIZONTAL SCALE : 1" = 30'
VERTICAL SCALE : 1" = 10'

JOB No. 192-076 PLATE I

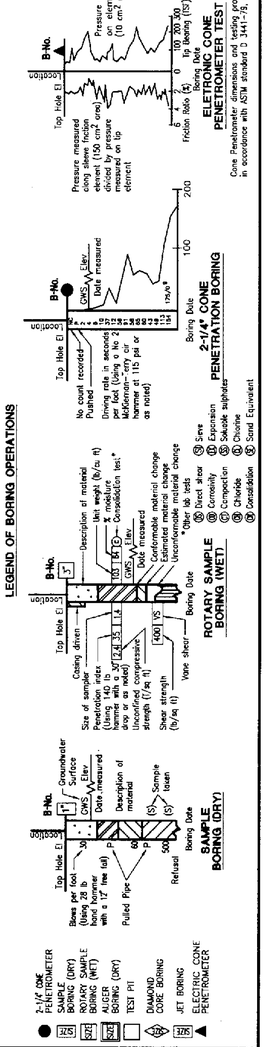

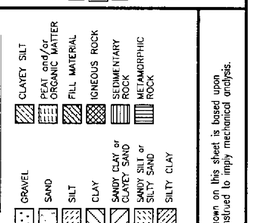

CONSISTENCY CLASSIFICATION FOR SOILS

According to the Standard Penetration Test

Penetration Index (blows/Ft)	Granular	Cohesive
0-4	Very loose	Very soft
5-9	Loose	Soft
10-19	Slightly compact	Stiff
20-34	Compact	Very stiff
35-69	Dense	Hard
>70	Very dense	Very hard

NOTE: Classification of earth material as shown on this sheet is based upon field inspection and is not to be construed to imply mechanical analysis.

BE NGUYEN — DESIGN OVERSIGHT — SIGN OFF DATE 3-13-96	DRAWN BY JOE MAGLIATO	E.A. RIUTORT — FIELD INVESTIGATOR	M&T AGRA — Geotechnical and Environmental Services
	CHECK BY E.A. RIUTORT	DATE 2-16-93	

PREPARED FOR THE STATE OF CALIFORNIA DEPARTMENT OF TRANSPORTATION

Y. NIEN WANG — PROJECT ENGINEER

BRIDGE NO. 55-0459 — POST MILE 16.4

ORANGETHORPE AVE UC (WIDEN)
LOG OF TEST BORINGS

FILENAME => 55e-538-z-474-1tb06.tif

ORIGINAL SCALE IN INCHES FOR REDUCED PLANS 0 1 2 3

CU 12209
EA 0125U1

DISREGARD PRINTS BEARING EARLIER REVISION DATES → REVISION DATES (PRELIMINARY STAGE ONLY) ~~8-24-94~~ 5/24/95

SHEET 14 OF 15

The State of California or its officers or agents shall not be responsible for the accuracy or completeness of electronic copies of this plan sheet.

8-26-96
TO ACCOMPANY PLANS DATED

DIST	COUNTY	ROUTE	POST MILES TOTAL PROJECT	SHEET NO.	TOTAL SHEETS
12	Ora	57, 91	15.6/16.6, 5.0/6.7	727	852

DIST.	COUNTY	ROUTE	SECTION	SHEET NO.	TOTAL SHEETS
07	Ora.	57	16.4/16.7	247	247

Date Approved October 17, 1996

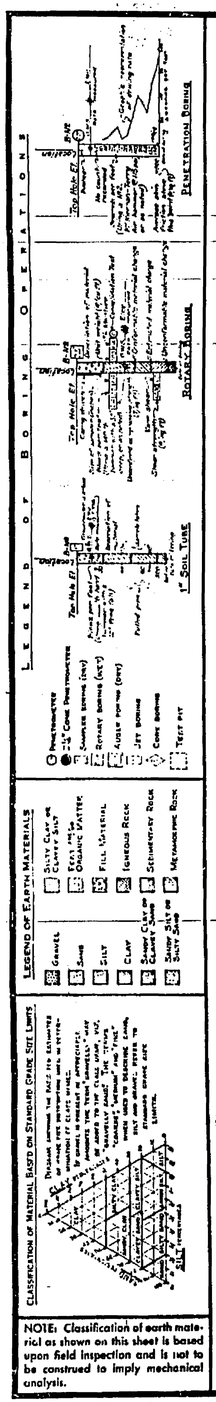

NOTE: Classification of earth material as shown on this sheet is based upon field inspection and is not to be construed to imply mechanical analysis.

BENCH MARK
BM #472 R-EE Elev 203.41
Set P/S in S. curb Orangethorpe Ave. 134
E. of ℄ Orange Fwy. 100' W of ℄ Nebraska Ave.

N 620,443.821
E 506,258.785

℄ CONST. RTE 57

℄ SURVEY

STA. LINE ORANGETHORPE AVE.

B-1 B-2 B-3 B-4 B-5

PLAN
Scale: 1" = 20'

NO AS-BUILT CHANGES

AS BUILT
CORRECTIONS BY A.M.ALAHMAD
CONTRACT NO. 12-0125 U4
DATE 04-25-00

AS-BUILT PLANS
Contract No. 07-032114
Date Completed
Document No. 70000575

DIVISION OF ENGINEERING SERVICES - GEOTECHNICAL SERVICES					
As-Built Log of Test Borings sheet is considered an informational document only. As such, the State of California registration seal with signature, license number and registration certificate expiration date confirm that this is a true and accurate copy of the original document. This drawing is available and presented only for the convenience of any bidder, contractor or other interested party.					
DIST.	COUNTY	ROUTE	POST MILES -TOTAL PROJECT	Sheet No.	Total Sheets
12	Ora	57	16.2/18.6	518	960
Lino Cheang				06/17/09	
REGISTERED CIVIL ENGINEER				DATE	
RETAINING WALL NO. 474					
LOG OF TEST BORINGS NO. 7					
NOTE: A COPY OF THIS LOG OF TEST BORINGS IS AVAILABLE AT OFFICE OF STRUCTURE MAINTENANCE AND INVESTIGATIONS, SACRAMENTO, CALIFORNIA		CU: 12 EA: 0F0311		BRIDGE No. 55E0080	
To accompany plans dated 12-14-09				Sheet 56	of 83

REGISTERED PROFESSIONAL ENGINEER
LINO C. CHEANG
NO. GE 2345
EXP. 9/30/09
GEOTECHNICAL
STATE OF CALIFORNIA

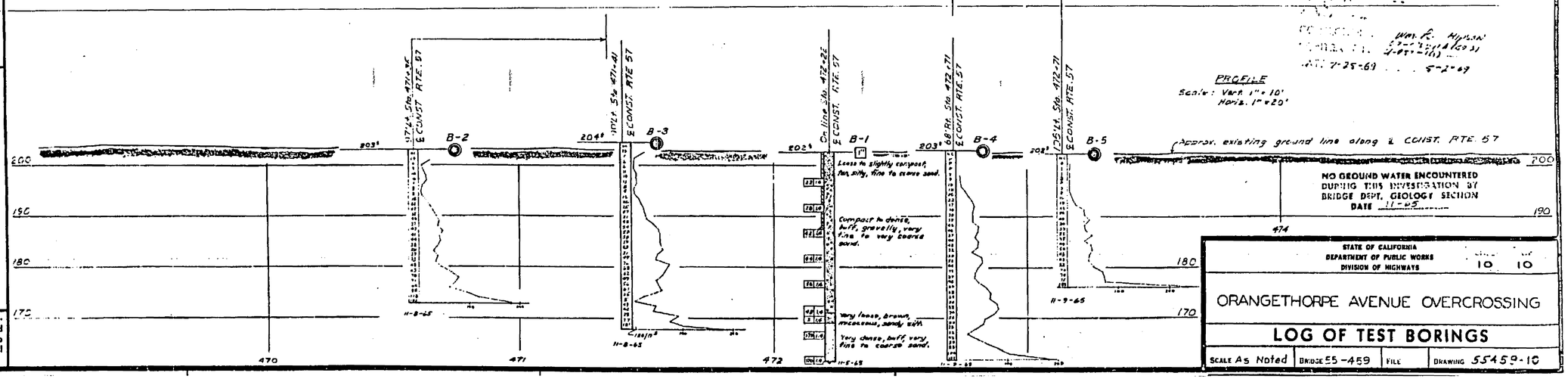

STATE OF CALIFORNIA
DEPARTMENT OF PUBLIC WORKS
DIVISION OF HIGHWAYS
10 10

ORANGETHORPE AVENUE OVERCROSSING

LOG OF TEST BORINGS

SCALE As Noted | BRIDGE 55-459 | FILE | DRAWING 55459-10

BE NGUYEN bengnyen	NOTE: ADDITIONAL AS-BUILT FOUNDATION DATA MAY BE AVAILABLE AT THE OFFICE OF TRANSPORTATION MATERIALS AND RESEARCH 5900 FOLSOM BOULEVARD, SACRAMENTO, CALIFORNIA 95819	DESIGN BY J. Hueser	CHECKED D. Kuang	PREPARED FOR THE STATE OF CALIFORNIA DEPARTMENT OF TRANSPORTATION	Y. Nien Wang
DESIGN OVERSIGHT		DETAILS BY T. Elofson	CHECKED D. Novak		PROJECT ENGINEER
SIGNOFF DATE 3-13-96		QUANTITIES BY J. Hueser	CHECKED L. Woo		

BRIDGE No. 55-0459
POST MILE 16.4

ORANGETHORPE AVE UC (WIDEN)
AS-BUILT LOG OF TEST BORINGS

ORIGINAL SCALE IN INCHES FOR REDUCED PLANS 0 1 2 3

CU 12209
EA 0125U1

DISREGARD PRINTS BEARING EARLIER REVISION DATES

REVISION DATES (PRELIMINARY STAGE ONLY) 5/9/94

SHEET 15 OF 15

FILENAME => 55e-538-z-474-ltb07.tif

Design Filename /usr/5599/design/ccbdsk.dgn
Plotted on 10-MAY-1994 Date Generated by USERNAME$$$$$$$$

Dist	COUNTY	ROUTE	POST MILES TOTAL PROJECT	SHEET No.	TOTAL SHEETS
12	Ora	57	16.2/18.6	519	960

REGISTERED CIVIL ENGINEER 06/17/09 DATE

12-14-09
PLANS APPROVAL DATE

REGISTERED PROFESSIONAL ENGINEER Chien-Tai Yang No. C 66394 Exp. 6-30-10 CIVIL STATE OF CALIFORNIA

THE STATE OF CALIFORNIA OR ITS OFFICERS OR AGENTS SHALL NOT BE RESPONSIBLE FOR THE ACCURACY OR COMPLETENESS OF SCANNED COPIES OF THIS PLAN SHEET.

ORANGE COUNTY TRANSPORTATION AUTHORITY
550 S. MAIN STREET
ORANGE, CA 92863-1584

EARTH MECHANICS, INC.
17660 NEWHOPE STREET, SUITE E
FOUNTAIN VALLEY, CA 92708

BENCHMARKS:

Vertical Datum NAVD 88

Designation: 1L-54-82 Elev = 153.171
Described by OCS 2002 - Found 3¾" OCS Aluminum Benchmark Disk Stamped "1L-54-82", set in the Top of a 6 in. by 6 in. Concrete Post. Monument is located along the Westerly Levee of the Santa Ana River, 0.25 Miles Northerly along Levee from the Centerline of Orangewood Avenue, 200 ft. Northeasterly of the Easterly Leg of the Anaheim Angels 200 ft. tall sign, 69 ft. Westerly of the Centerline of the Bike Trail and 1.5 ft. Westerly of a Steel OCS Witness Post. Monument is set 0.3 below the Ground.

Designation: 2G-25-70 Elev = 275.872
Described by OCS 2003 - Found 3¾" OCS Aluminum Benchmark Disk Stamped "2G-25-70", set in the Southeasterly Corner of a 4 ft by 6 ft Concrete Catch Basin. Monument is Located in the Northwesterly Corner of the Intersection of Yorba Linda Boulevard and Deerpark Drive, 75 ft Westerly of the Centerline of Deerpark and 46 ft Northerly of the Centerline of Yorba Linda. Monument is set Level with the Sidewalk.

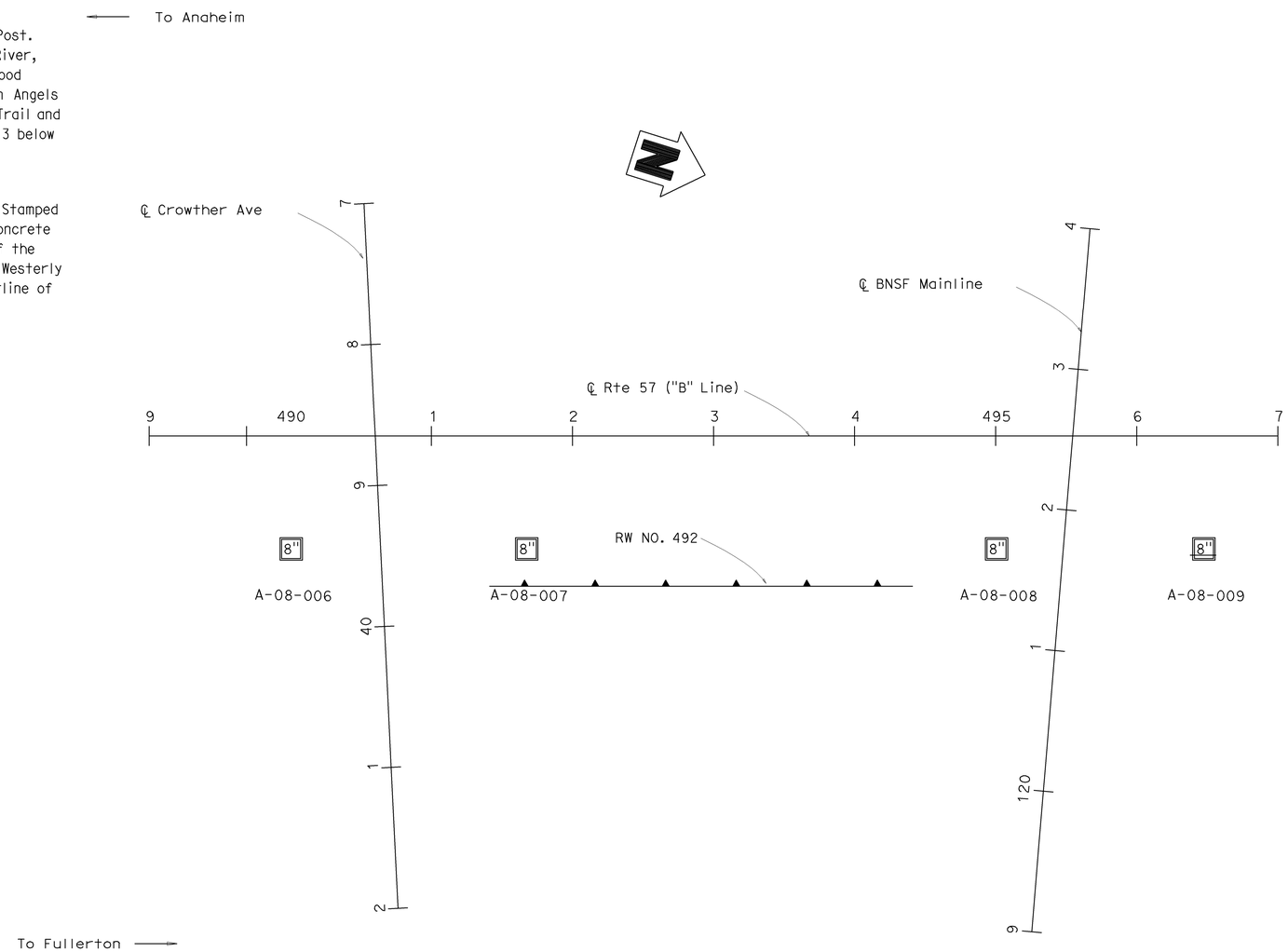

PLAN
1" = 50'

DESIGN OVERSIGHT Jon Hamaguchi
6-24-09
SIGN OFF DATE

DRAWN BY: J.Fang
CHECKED BY: L.Cheang

FIELD INVESTIGATION BY:
R.Jie

PREPARED FOR THE STATE OF CALIFORNIA DEPARTMENT OF TRANSPORTATION

C. Yang
PROJECT ENGINEER

BRIDGE NO. 55E0082
POST MILES 16.2/18.6

RETAINING WALL NO. 492
LOG OF TEST BORINGS NO. 1

DESIGN GENERAL PLAN SHEET (ENGLISH) (REV. 2/25/05)

ORIGINAL SCALE IN INCHES FOR REDUCED PLANS 0 1 2 3

CU 12
EA 0F0311

DISREGARD PRINTS BEARING EARLIER REVISION DATES

REVISION DATES (PRELIMINARY STAGE ONLY) 4/30/09

SHEET 57 OF 83

USERNAME => trrene DATE PLOTTED => 17-DEC-2009 TIME PLOTTED => 10:07

FILE => 55e-538-z-492-1tb01.dgn

Dist	COUNTY	ROUTE	POST MILES TOTAL PROJECT	SHEET No.	TOTAL SHEETS
12	Ora	57	16.2/18.6	520	960

REGISTERED CIVIL ENGINEER — DATE 06/17/09

12-14-09
PLANS APPROVAL DATE

REGISTERED PROFESSIONAL ENGINEER — Chien-Tai Yang — No. C 66394 — Exp. 6-30-10 — CIVIL — STATE OF CALIFORNIA

THE STATE OF CALIFORNIA OR ITS OFFICERS OR AGENTS SHALL NOT BE RESPONSIBLE FOR THE ACCURACY OR COMPLETENESS OF SCANNED COPIES OF THIS PLAN SHEET.

ORANGE COUNTY TRANSPORTATION AUTHORITY
550 S. MAIN STREET
ORANGE, CA 92863-1584

EARTH MECHANICS, INC.
17660 NEWHOPE STREET, SUITE E
FOUNTAIN VALLEY, CA 92708

FOR PLAN VIEW SEE "RETAINING WALL NO. 492, LOG OF TEST BORINGS NO. 1"

NOTES:

(1) This LOTB sheet was prepared in accordance with the Caltrans Soil and Rock Logging, Classification and Presentation Manual (June 2007)

(2) 2.4" samples were taken using a California Modified Sampler.

(3) An automatic trip hammer system consisting of a hammer weight of 140 lbs falling a distance of 30" was used to advance the drive sampler.

(4) Conversion factor from 2.4" Modified California Ring Sampler blowcounts to Standard Penetration Test (SPT) blowcounts is 0.5.

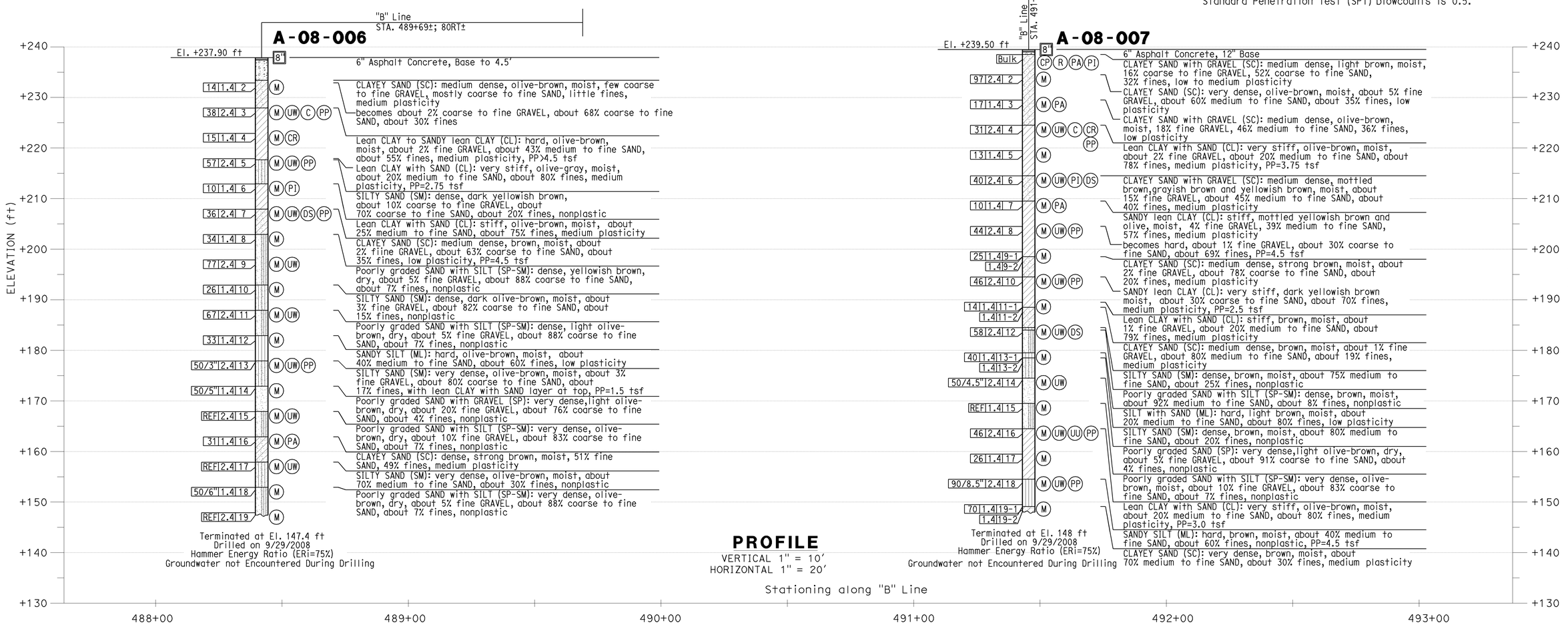

DESIGN OVERSIGHT Jon Hamaguchi 6-24-09 SIGN OFF DATE	DRAWN BY: J.Fang CHECKED BY: L.Cheang	FIELD INVESTIGATION BY: R.Jie	PREPARED FOR THE STATE OF CALIFORNIA DEPARTMENT OF TRANSPORTATION	C. Yang PROJECT ENGINEER	BRIDGE NO. 55E0082 POST MILES 16.2/18.6

RETAINING WALL NO. 492
LOG OF TEST BORINGS NO. 2

DESIGN GENERAL PLAN SHEET (ENGLISH) (REV. 2/25/05)

ORIGINAL SCALE IN INCHES FOR REDUCED PLANS 0 1 2 3

CU 12
EA 0F0311

DISREGARD PRINTS BEARING EARLIER REVISION DATES 4/30/09

REVISION DATES (PRELIMINARY STAGE ONLY)

SHEET 58 OF 83

FILE => 55e-538-z-492-ltb02.dgn

USERNAME => ttrene DATE PLOTTED => 17-DEC-2009 TIME PLOTTED => 10:07

Dist	COUNTY	ROUTE	POST MILES TOTAL PROJECT	SHEET No.	TOTAL SHEETS
12	Ora	57	16.2/18.6	521	960

REGISTERED CIVIL ENGINEER — DATE 06/17/09

12-14-09
PLANS APPROVAL DATE

REGISTERED PROFESSIONAL ENGINEER — Chien-Tai Yang — No. C 66394 — Exp. 6-30-10 — CIVIL — STATE OF CALIFORNIA

THE STATE OF CALIFORNIA OR ITS OFFICERS OR AGENTS SHALL NOT BE RESPONSIBLE FOR THE ACCURACY OR COMPLETENESS OF SCANNED COPIES OF THIS PLAN SHEET.

ORANGE COUNTY TRANSPORTATION AUTHORITY
550 S. MAIN STREET
ORANGE, CA 92863-1584

EARTH MECHANICS, INC.
17660 NEWHOPE STREET, SUITE E
FOUNTAIN VALLEY, CA 92708

FOR PLAN VIEW SEE "RETAINING WALL NO. 492, LOG OF TEST BORINGS NO. 1"

NOTES:

(1) This LOTB sheet was prepared in accordance with the Caltrans Soil and Rock Logging, Classification and Presentation Manual (June 2007)

(2) 2.4" samples were taken using a California Modified Sampler.

(3) An automatic trip hammer system consisting of a hammer weight of 140 lbs falling a distance of 30" was used to advance the drive sampler.

(4) Conversion factor from 2.4" Modified California Ring Sampler blowcounts to Standard Penetration Test (SPT) blowcounts is 0.5.

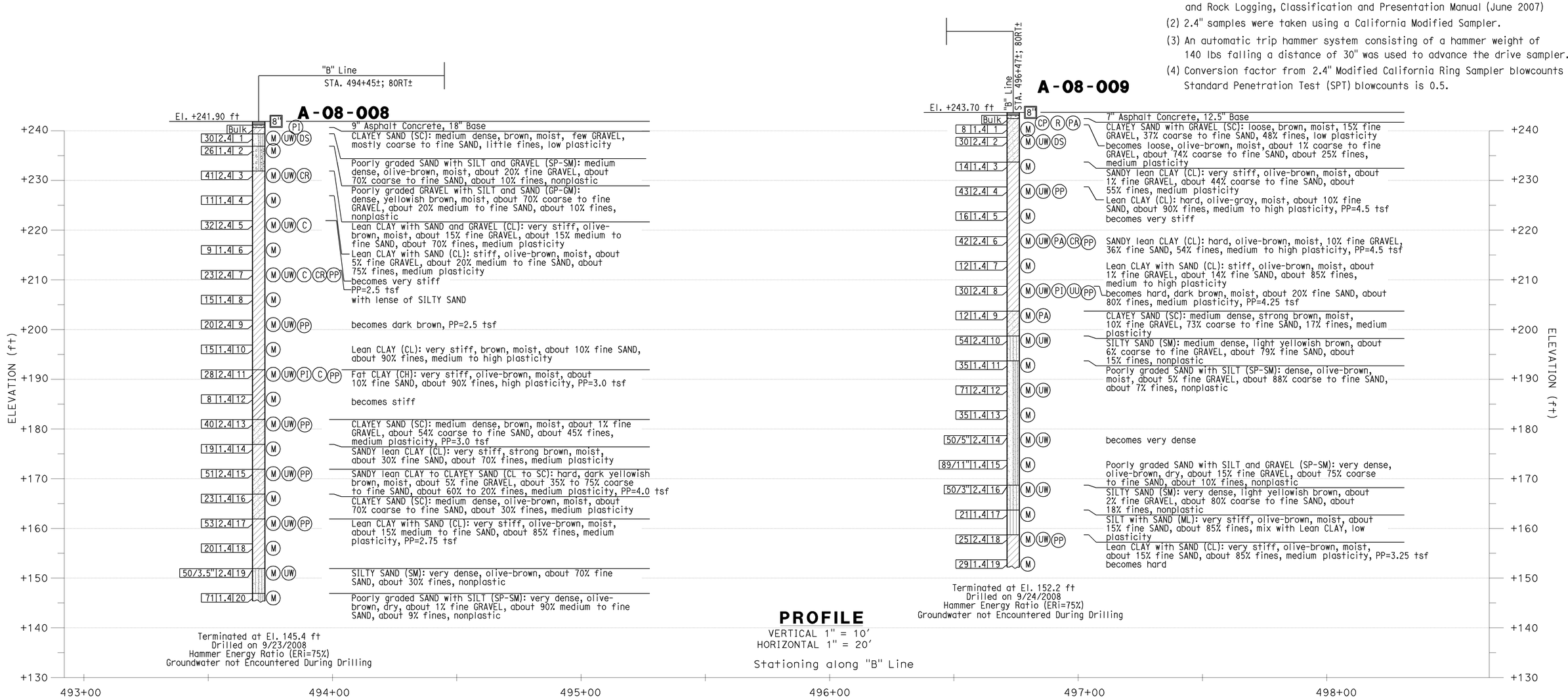

PROFILE
VERTICAL 1" = 10'
HORIZONTAL 1" = 20'

DESIGN OVERSIGHT Jon Hamaguchi — 6-24-09 SIGN OFF DATE	DRAWN BY: J.Fang CHECKED BY: L.Cheang	FIELD INVESTIGATION BY: R.Jie	PREPARED FOR THE STATE OF CALIFORNIA DEPARTMENT OF TRANSPORTATION	C. Yang PROJECT ENGINEER	BRIDGE NO. 55E0082 POST MILES 16.2/18.6	RETAINING WALL NO. 492 LOG OF TEST BORINGS NO. 3

DESIGN GENERAL PLAN SHEET (ENGLISH) (REV. 2/25/05)

ORIGINAL SCALE IN INCHES FOR REDUCED PLANS 0 1 2 3

CU 12
EA 0F0311

DISREGARD PRINTS BEARING EARLIER REVISION DATES → 4/30/09

REVISION DATES (PRELIMINARY STAGE ONLY)

SHEET 59 OF 83

FILE => 55e-538-z-492-ltb03.dgn

USERNAME => trrene DATE PLOTTED => 17-DEC-2009 TIME PLOTTED => 10:07

Dist	COUNTY	ROUTE	POST MILES TOTAL PROJECT	SHEET No.	TOTAL SHEETS
12	Ora	57	16.2/18.6	522	960

REGISTERED CIVIL ENGINEER — DATE 06/17/09

12-14-09
PLANS APPROVAL DATE

REGISTERED PROFESSIONAL ENGINEER — Chien-Tai Yang — No. C 66394 — Exp. 6-30-10 — CIVIL — STATE OF CALIFORNIA

THE STATE OF CALIFORNIA OR ITS OFFICERS OR AGENTS SHALL NOT BE RESPONSIBLE FOR THE ACCURACY OR COMPLETENESS OF SCANNED COPIES OF THIS PLAN SHEET.

ORANGE COUNTY TRANSPORTATION AUTHORITY
550 S. MAIN STREET
ORANGE, CA 92863-1584

EARTH MECHANICS, INC.
17660 NEWHOPE STREET, SUITE E
FOUNTAIN VALLEY, CA 92708

REFERENCE: CALTRANS SOIL & ROCK LOGGING, CLASSIFICATION, AND PRESENTATION MANUAL (JUNE 2007)

CEMENTATION

Description	Criteria
Weak	Crumbles or breaks with handling or little finger pressure.
Moderate	Crumbles or breaks with considerable finger pressure.
Strong	Will not crumble or break with finger pressure.

CONSISTENCY OF COHESIVE SOILS

Description	Unconfined Compressive Strength (tsf)	Pocket Penetrometer Measurement (tsf)	Torvane Measurement (tsf)	Field Approximation
Very Soft	< 0.25	< 0.25	< 0.12	Easily penetrated several inches by fist
Soft	0.25 to 0.50	0.25 to 0.50	0.12 to 0.25	Easily penetrated several inches by thumb
Medium Stiff	0.50 to 1.0	0.50 to 1.0	0.25 to 0.50	Penetrated several inches by thumb with moderate effort
Stiff	1 to 2	1 to 2	0.50 to 1.0	Readily indented by thumb but penetrated only with great effort
Very Stiff	2 to 4	2 to 4	1.0 to 2.0	Readily indented by thumbnail
Hard	> 4.0	> 4.0	> 2.0	Indented by thumbnail with difficulty

BOREHOLE IDENTIFICATION

Symbol	Hole Type	Description
Size	A	Auger Boring
Size	R P	Rotary drilled boring Rotary percussion boring (air)
Size	R	Rotary drilled diamond core
Size	HD HA	Hand driven (1-inch soil tube) Hand Auger
●	D	Dynamic Cone Penetration Boring
▲	CPT	Cone Penetration Test (ASTM D 5778-95)
⬚	O	Other

Note: Size in inches.

PLASTICITY OF FINE-GRAINED SOILS

Description	Criteria
Nonplastic	A 1/8-inch thread cannot be rolled at any water content.
Low	The thread can barely be rolled and the lump cannot be formed when drier than the plastic limit.
Medium	The thread is easy to roll and not much time is required to reach the plastic limit. The thread cannot be rerolled after reaching the plastic limit. The lump crumbles when drier than the plastic limit.
High	It takes considerable time rolling and kneading to reach the plastic limit. The thread can be rerolled several times after reaching the plastic limit. The lump can be formed without crumbling when drier than the plastic limit.

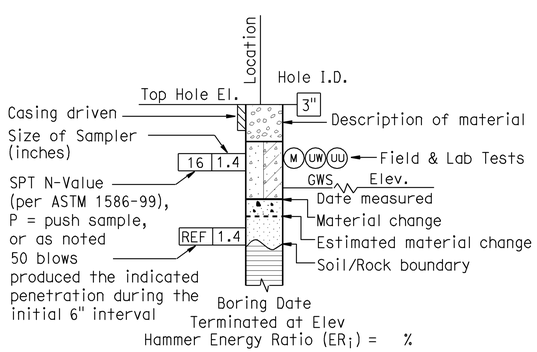

ROTARY BORING

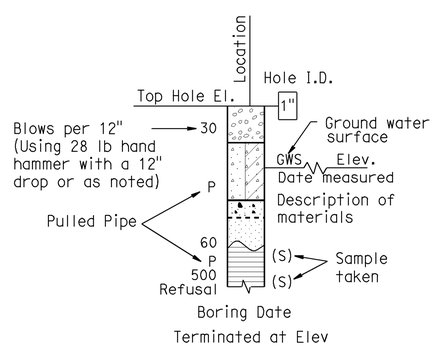

HAND BORING

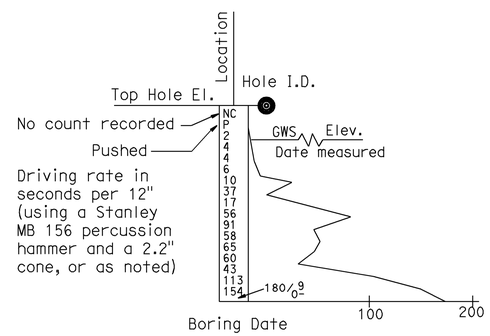

DYNAMIC CONE PENETRATION BORING

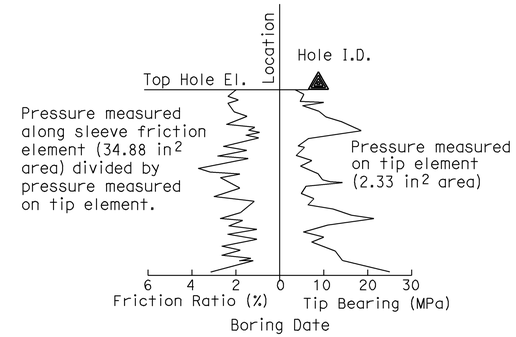

CONE PENETRATION TEST (CPT) SOUNDING

DESIGN OVERSIGHT — Jon Hamaguchi
6-24-09
SIGN OFF DATE

DRAWN BY: J.Fang
CHECKED BY: L.Cheang

FIELD INVESTIGATION BY:
R.Jie

PREPARED FOR THE STATE OF CALIFORNIA DEPARTMENT OF TRANSPORTATION

C.Yang
PROJECT ENGINEER

BRIDGE NO. 55E0082
POST MILES 16.2/18.6

RETAINING WALL NO. 492
LOG OF TEST BORINGS NO. 4

DESIGN GENERAL PLAN SHEET (ENGLISH) (REV. 2/25/05)

ORIGINAL SCALE IN INCHES FOR REDUCED PLANS 0 1 2 3

CU 12
EA 0F0311

DISREGARD PRINTS BEARING EARLIER REVISION DATES

REVISION DATES (PRELIMINARY STAGE ONLY)

SHEET 60 OF 83

FILE => 55e-538-z-492-ltb04.dgn

USERNAME => ttrene DATE PLOTTED => 17-DEC-2009 TIME PLOTTED => 10:07

REFERENCE: CALTRANS SOIL & ROCK LOGGING, CLASSIFICATION, AND PRESENTATION MANUAL (JUNE 2007)

GROUP SYMBOLS AND NAMES

Graphic/Symbol	Group Names
GW	Well-graded GRAVEL Well-graded GRAVEL with SAND
GP	Poorly graded GRAVEL Poorly graded GRAVEL with SAND
GW-GM	Well-graded GRAVEL with SILT Well-graded GRAVEL with SILT and SAND
GW-GC	Well-graded GRAVEL with CLAY (or SILTY CLAY) Well-graded GRAVEL with CLAY and SAND (or SILTY CLAY and SAND)
GP-GM	Poorly graded GRAVEL with SILT Poorly graded GRAVEL with SILT and SAND
GP-GC	Poorly graded GRAVEL with CLAY (or SILTY CLAY) Poorly graded GRAVEL with CLAY and SAND (or SILTY CLAY and SAND)
GM	SILTY GRAVEL SILTY GRAVEL with SAND
GC	CLAYEY GRAVEL CLAYEY GRAVEL with SAND
GC-GM	SILTY, CLAYEY GRAVEL SILTY, CLAYEY GRAVEL with SAND
SW	Well-graded SAND Well-graded SAND with GRAVEL
SP	Poorly graded SAND Poorly graded SAND with GRAVEL
SW-SM	Well-graded SAND with SILT Well-graded SAND with SILT and GRAVEL
SW-SC	Well-graded SAND with CLAY (or SILTY CLAY) Well-graded SAND with CLAY and GRAVEL (or SILTY CLAY and GRAVEL)
SP-SM	Poorly graded SAND with SILT Poorly graded SAND with SILT and GRAVEL
SP-SC	Poorly graded SAND with CLAY (or SILTY CLAY) Poorly graded SAND with CLAY and GRAVEL (or SILTY CLAY and GRAVEL)
SM	SILTY SAND SILTY SAND with GRAVEL
SC	CLAYEY SAND CLAYEY SAND with GRAVEL
SC-SM	SILTY, CLAYEY SAND SILTY, CLAYEY SAND with GRAVEL
PT	PEAT
	COBBLES COBBLES and BOULDERS BOULDERS

Graphic/Symbol	Group Names
CL	Lean CLAY Lean CLAY with SAND Lean CLAY with GRAVEL SANDY lean CLAY SANDY lean CLAY with GRAVEL GRAVELLY lean CLAY GRAVELLY lean CLAY with SAND
CL-ML	SILTY CLAY SILTY CLAY with SAND SILTY CLAY with GRAVEL SANDY SILTY CLAY SANDY SILTY CLAY with GRAVEL GRAVELLY SILTY CLAY GRAVELLY SILTY CLAY with SAND
ML	SILT SILT with SAND SILT with GRAVEL SANDY SILT SANDY SILT with GRAVEL GRAVELLY SILT GRAVELLY SILT with SAND
OL	ORGANIC lean CLAY ORGANIC lean CLAY with SAND ORGANIC lean CLAY with GRAVEL SANDY ORGANIC lean CLAY SANDY ORGANIC lean CLAY with GRAVEL GRAVELLY ORGANIC lean CLAY GRAVELLY ORGANIC lean CLAY with SAND
OL	ORGANIC SILT ORGANIC SILT with SAND ORGANIC SILT with GRAVEL SANDY ORGANIC SILT SANDY ORGANIC SILT with GRAVEL GRAVELLY ORGANIC SILT GRAVELLY ORGANIC SILT with SAND
CH	Fat CLAY Fat CLAY with SAND Fat CLAY with GRAVEL SANDY fat CLAY SANDY fat CLAY with GRAVEL GRAVELLY fat CLAY GRAVELLY fat CLAY with SAND
MH	Elastic SILT Elastic SILT with SAND Elastic SILT with GRAVEL SANDY elastic SILT SANDY elastic SILT with GRAVEL GRAVELLY elastic SILT GRAVELLY elastic SILT with SAND
OH	ORGANIC fat CLAY ORGANIC fat CLAY with SAND ORGANIC fat CLAY with GRAVEL SANDY ORGANIC fat CLAY SANDY ORGANIC fat CLAY with GRAVEL GRAVELLY ORGANIC fat CLAY GRAVELLY ORGANIC fat CLAY with SAND
OH	ORGANIC elastic SILT ORGANIC elastic SILT with SAND ORGANIC elastic SILT with GRAVEL SANDY ORGANIC elastic SILT SANDY ORGANIC elastic SILT with GRAVEL GRAVELLY ORGANIC elastic SILT GRAVELLY ORGANIC elastic SILT with SAND
OL/OH	ORGANIC SOIL ORGANIC SOIL with SAND ORGANIC SOIL with GRAVEL SANDY ORGANIC SOIL SANDY ORGANIC SOIL with GRAVEL GRAVELLY ORGANIC SOIL GRAVELLY ORGANIC SOIL with SAND

FIELD AND LABORATORY TESTING

- (C) Consolidation (ASTM D 2435)
- (CL) Collapse Potential (ASTM D 5333)
- (CP) Compaction Curve (CTM 216)
- (CR) Corrosivity Testing (CTM 643, CTM 422, CTM 417)
- (CU) Consolidated Undrained Triaxial (ASTM D 4767)
- (DS) Direct Shear (ASTM D 3080)
- (EI) Expansion Index (ASTM D 4829)
- (M) Moisture Content (ASTM D 2216)
- (OC) Organic Content-% (ASTM D 2974)
- (P) Permeability (CTM 220)
- (PA) Particle Size Analysis (ASTM D 422)
- (PI) Plasticity Index (AASHTO T 90) Liquid Limit (AASHTO T 89)
- (PL) Point Load Index (ASTM D 5731)
- (PM) Pressure Meter
- (PP) Pocket Penetrometer
- (R) R-Value (CTM 301)
- (SE) Sand Equivalent (CTM 217)
- (SG) Specific Gravity (AASHTO T 100)
- (SL) Shrinkage Limit (ASTM D 427)
- (SW) Swell Potential (ASTM D 4546)
- (TV) Pocket Torvane
- (UC) Unconfined Compression-Soil (ASTM D 2166) Unconfined Compression-Rock (ASTM D 2938)
- (UU) Unconsolidated Undrained Triaxial (ASTM D 2850)
- (UW) Unit Weight (ASTM D 4767)
- (VS) Vane Shear (AASHTO T 223)

Dist	COUNTY	ROUTE	POST MILES TOTAL PROJECT	SHEET No.	TOTAL SHEETS
12	Ora	57	16.2/18.6	523	960

REGISTERED CIVIL ENGINEER — DATE 06/17/09

12-14-09
PLANS APPROVAL DATE

REGISTERED PROFESSIONAL ENGINEER — Chien-Tai Yang — No. C 66394 — Exp. 6-30-10 — CIVIL — STATE OF CALIFORNIA

THE STATE OF CALIFORNIA OR ITS OFFICERS OR AGENTS SHALL NOT BE RESPONSIBLE FOR THE ACCURACY OR COMPLETENESS OF SCANNED COPIES OF THIS PLAN SHEET.

ORANGE COUNTY TRANSPORTATION AUTHORITY
550 S. MAIN STREET
ORANGE, CA 92863-1584

EARTH MECHANICS, INC.
17660 NEWHOPE STREET, SUITE E
FOUNTAIN VALLEY, CA 92708

APPARENT DENSITY OF COHESIONLESS SOILS

Description	SPT N_{60} (Blows / 12 inches)
Very loose	0 - 4
Loose	5 - 10
Medium Dense	11 - 30
Dense	31 - 50
Very Dense	> 50

MOISTURE

Description	Criteria
Dry	Absence of moisture, dusty, dry to the touch
Moist	Damp but no visible water
Wet	Visible free water, usually soil is below water table

PERCENT OR PROPORTION OF SOILS

Description	Criteria
Trace	Particles are present but estimated to be less than 5%
Few	5 to 10%
Little	15 to 25%
Some	30 to 45%
Mostly	50 to 100%

PARTICLE SIZE

Description		Size
Boulder		> 12"
Cobble		3" to 12"
Gravel	Coarse	3/4" to 3"
	Fine	No. 4 to 3/4"
Sand	Coarse	No. 10 to No. 4
	Medium	No. 40 to No. 10
	Fine	No. 200 to No. 40

DESIGN OVERSIGHT

SIGN OFF DATE

DRAWN BY: J.Fang

CHECKED BY: L.Cheang

FIELD INVESTIGATION BY: R.Jie

PREPARED FOR THE STATE OF CALIFORNIA DEPARTMENT OF TRANSPORTATION

C.Yang
PROJECT ENGINEER

BRIDGE NO. 55E0082
POST MILES 16.2/18.6

RETAINING WALL NO. 492
LOG OF TEST BORINGS NO. 5

DESIGN GENERAL PLAN SHEET (ENGLISH) (REV. 2/25/05)

ORIGINAL SCALE IN INCHES FOR REDUCED PLANS 0 1 2 3

CU 12
EA 0F0311

DISREGARD PRINTS BEARING EARLIER REVISION DATES

REVISION DATES (PRELIMINARY STAGE ONLY)

SHEET 61 OF 83

FILE => 55e-538-z-492-ltb05.dgn

USERNAME => trrene DATE PLOTTED => 17-DEC-2009 TIME PLOTTED => 10:07

DIVISION OF ENGINEERING SERVICES - GEOTECHNICAL SERVICES					
As-Built Log of Test Borings sheet is considered an informational document only. As such, the State of California registration seal with signature, license number and registration certificate expiration date confirm that this is a true and accurate copy of the original document. This drawing is available and presented only for the convenience of any bidder, contractor or other interested party.					
DIST.	COUNTY	ROUTE	POST MILES -TOTAL PROJECT	Sheet No.	Total Sheets
12	Ora	57	16.2/18.6	524	960
Lino Cheang REGISTERED CIVIL ENGINEER				06/17/09 DATE	

RETAINING WALL NO. 492

LOG OF TEST BORINGS NO. 6

NOTE: A COPY OF THIS LOG OF TEST BORINGS IS AVAILABLE AT OFFICE OF STRUCTURE MAINTENANCE AND INVESTIGATIONS, SACRAMENTO, CALIFORNIA	CU: 12 - EA: 0F0311	BRIDGE No. 55E0082
To accompany plans dated 12-14-09	Sheet 62	of 83

REGISTERED PROFESSIONAL ENGINEER LINO C. CHEANG NO. GE 2345 EXP. 9/30/09 GEOTECHNICAL STATE OF CALIFORNIA

DIST	COUNTY	ROUTE	POST MILES TOTAL PROJECT	SHEET NO.	TOTAL SHEETS
12	Ora	57	11.1/21.2	476	491

Kul Bhushan 12/28/89
GEOTECHNICAL PROFESSIONAL
10-29-90
PLANS APPROVAL DATE

REGISTERED PROFESSIONAL ENGINEER KUL BHUSHAN No. GE 000144 Exp. 12/31/1989 GEOTECHNICAL STATE OF CALIFORNIA

GEOFON, INC.
5552 CERRITOS AVENUE, SUITE B
CYPRESS, CALIFORNIA
JOB NO.: 88-351

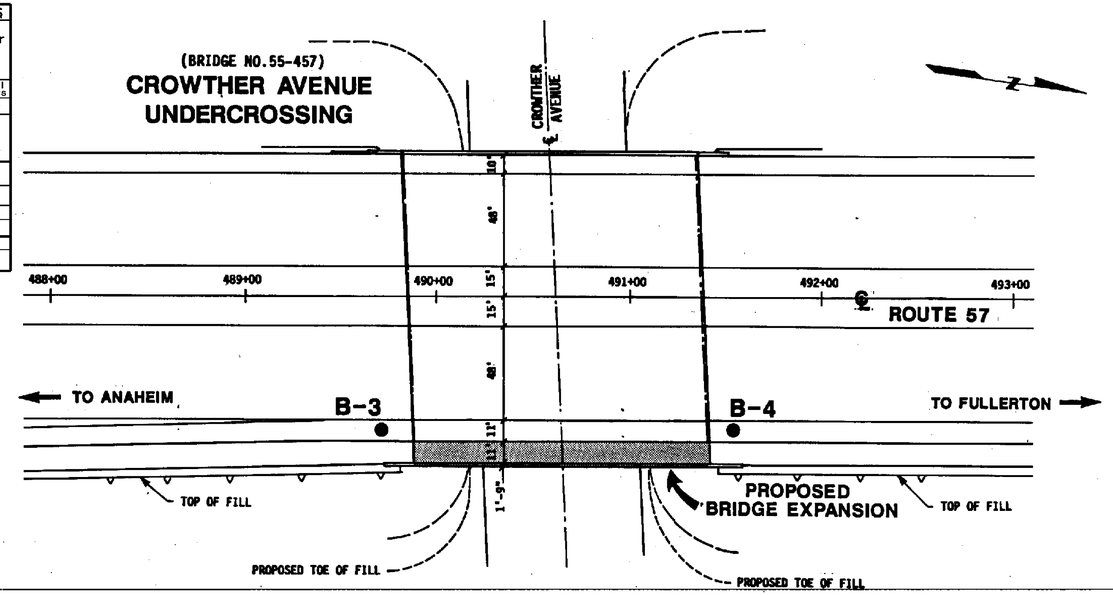

PLAN

SCALE: 1"=40'

AS BUILT NO AS BUILT CHANGES
CORRECTIONS BY J. PINHEIRO I. PANGLE
CONTRACT NO. 12-020184
DATE 11-24-92

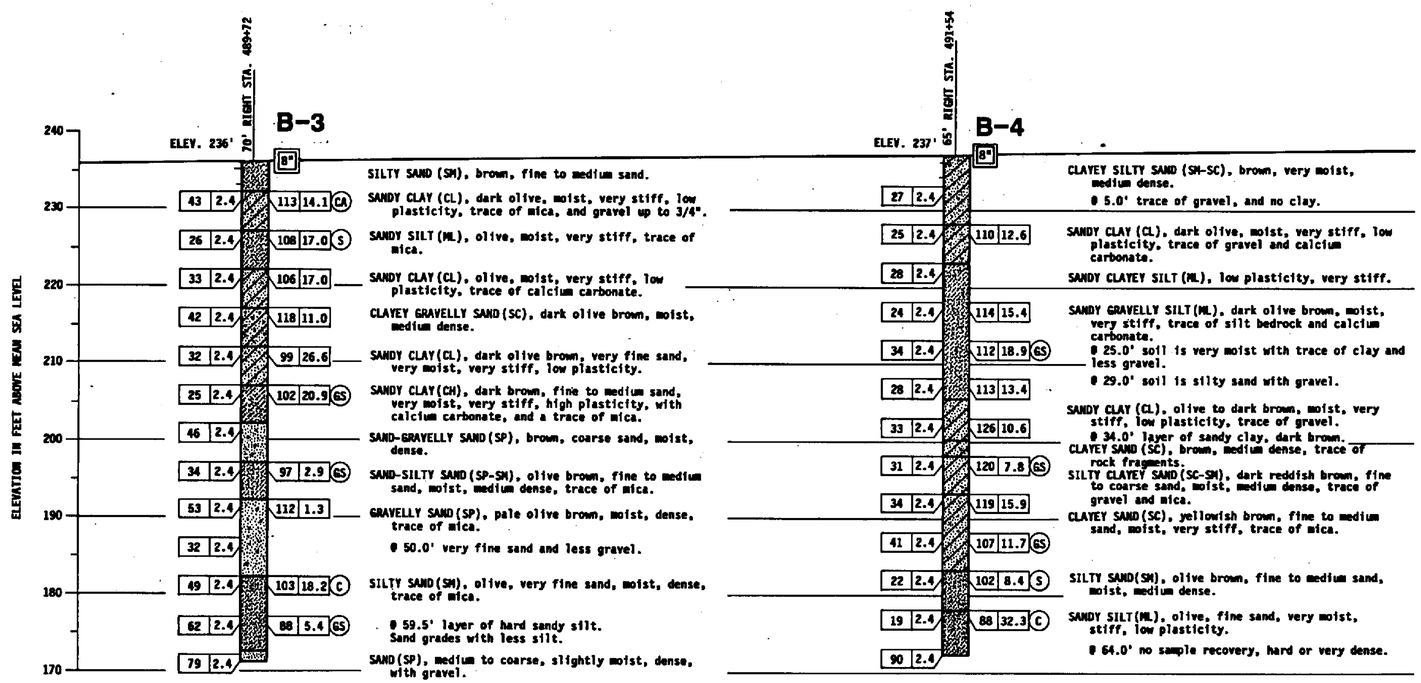

PROFILE

VERTICAL SCALE: 1"=10'
HORIZONTAL SCALE: 1"=20'

BM 535-D-70 ELEVATION 257.37

FOUND CHISELED CROSS ON TOP OF THE NW ANCHOR BOLT OF A SIGN BASE 77 FEET EASTERLY OF THE CENTERLINE OF ROUTE 57 (ORANGE FREEWAY) STATION 535+60 AND 105 FEET NORTHERLY OF THE CENTERLINE OF NUTWOOD AVE..

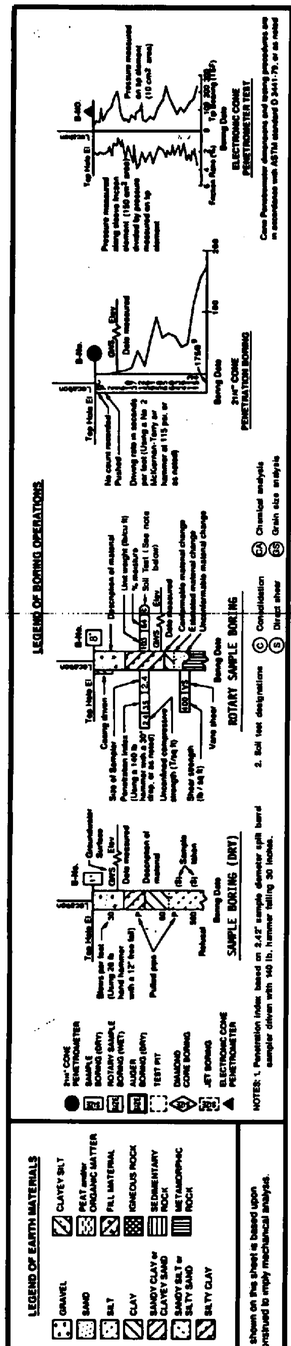

DESIGN OVERSIGHT 8-22-92 SIGN OFF DATE	DRAWN BY B.BASMADJIAN	S. MOHAMAD FIELD INVESTIGATOR	PREPARED FOR THE STATE OF CALIFORNIA DEPARTMENT OF TRANSPORTATION	Gary Antonucci PROJECT ENGINEER	BRIDGE NO. 55-457
	CHECKED BY H.ABDALLAH	DATE 12-28-89			POST MILE 16.8

CROWTHER AVE. UNDERCROSSING (WIDEN)

LOG OF TEST BORINGS

ORIGINAL SCALE IN INCHES FOR REDUCED PLANS 0 1 2 3

CU 12208
EA 020180

DISREGARD PRINTS BEARING EARLIER REVISION DATES →

REVISION DATES (PRELIMINARY STAGE ONLY)

SHEET 8 OF 9

FILENAME => 55e-538-z-492-1tb06.tif

DIST	COUNTY	ROUTE	POST MILES – TOTAL PROJECT	SHEET No.	TOTAL SHEETS
12	Ora	57	11.1/21.2	477	491

N 622 234 795
E 502, 840.385

BENCH MARK

BM 491L-08 Elev. 206.51
Set PS in N. Curb Crowther Ave. @ BCR
to W corner E of Placentia Ave 292 W
of E Fwy 32 N. of ℄ Crowther Ave.

B-4 B-1 B-3 B-5 B-2

℄ FWY. RTE. 57

489 490 492 493

CROWTHER AVE.

DIVISION OF ENGINEERING SERVICES - GEOTECHNICAL SERVICES					
As-Built Log of Test Borings sheet is considered an informational document only. As such, the State of California registration seal with signature, license number and registration certificate expiration date confirm that this is a true and accurate copy of the original document. This drawing is available and presented only for the convenience of any bidder, contractor or other interested party.					
DIST.	COUNTY	ROUTE	POST MILES -TOTAL PROJECT	Sheet No.	Total Sheets
12	Ora	57	16.2/18.6	525	960
Lino Cheang REGISTERED CIVIL ENGINEER			06/17/09 DATE		
RETAINING WALL NO. 492					
LOG OF TEST BORINGS NO. 7					
NOTE: A COPY OF THIS LOG OF TEST BORINGS IS AVAILABLE AT OFFICE OF STRUCTURE MAINTENANCE AND INVESTIGATIONS, SACRAMENTO, CALIFORNIA		CU: 12 EA: 0F0311		BRIDGE No. 55E0082	
To accompany plans dated 12-14-09				Sheet 63	of 83

REGISTERED PROFESSIONAL ENGINEER LINO C. CHEANG NO. GE 2345 EXP. 9/30/09 GEOTECHNICAL STATE OF CALIFORNIA

AS - BUILT PLAN — FOR INFORMATION ONLY

Kul Chushan
GEOTECHNICAL PROFESSIONAL
DATE APPROVED 10-29-90

CROWTHER AVENUE UC (WIDEN)
LOG OF TEST BORINGS

	~~CU: 12208~~ EA: 020181	BRIDGE No. 55 - 457

REGISTERED PROFESSIONAL ENGINEER KUL CHUSHAN No. GE 000144 Exp. 12-31-93 GEOTECHNICAL STATE OF CALIFORNIA

PLAN
Scale: 1" = 20'

AS BUILT
CORRECTIONS BY
CONTRACT NO.
DATE

AS BUILT PLANS
Contract No. 07-052124
Date Completed
Document No. 70000668

AS BUILT NO AS BUILT CHANGES
CONTRACT NUMBER 12- 020184
RESIDENT ENGINEER J. MINHEIRO & I. PANGLE
COMPLETION DATE 11-24-92

PROFILE
Scale: Vert 1" = 10'
Horiz 1" = 20'

NO GROUND WATER ENCOUNTERED DURING THIS INVESTIGATION BY BRIDGE DEPT. GEOLOGY SECTION DATE Nov & Dec. 1965

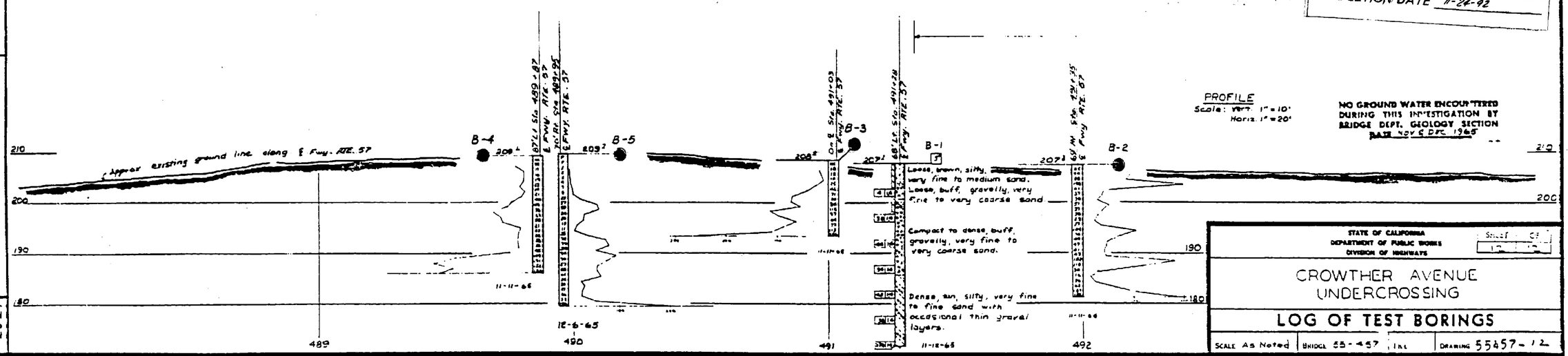

STATE OF CALIFORNIA
DEPARTMENT OF PUBLIC WORKS
DIVISION OF HIGHWAYS

CROWTHER AVENUE UNDERCROSSING

LOG OF TEST BORINGS

SCALE As Noted | BRIDGE 55-457 | DRAWING 55457-12

Charge: 07208
W.A.: 032121

PREL. DRAWING NO. PR- 79/1

SHEET	OF
9	9

FILENAME => 55e-538-z-492-ltb07.tif

DIST.	COUNTY	ROUTE	POST MILES -TOTAL PROJECT	Sheet No.	Total Sheets
12	Ora	57	16.2/18.6	526	960

DIVISION OF ENGINEERING SERVICES - GEOTECHNICAL SERVICES

As-Built Log of Test Borings sheet is considered an informational document only. As such, the State of California registration seal with signature, license number and registration certificate expiration date confirm that this is a true and accurate copy of the original document. This drawing is available and presented only for the convenience of any bidder, contractor or other interested party.

Lino Cheang — 06/17/09
REGISTERED CIVIL ENGINEER — DATE

RETAINING WALL NO. 492

LOG OF TEST BORINGS NO. 8

NOTE: A COPY OF THIS LOG OF TEST BORINGS IS AVAILABLE AT OFFICE OF STRUCTURE MAINTENANCE AND INVESTIGATIONS, SACRAMENTO, CALIFORNIA

CU: 12 EA: 0F0311 — BRIDGE No. 55E0082 — Sheet 64 of 83

To accompany plans dated 12-14-09

REGISTERED PROFESSIONAL ENGINEER — LINO C. CHEANG — NO. GE 2345 — EXP. 9/30/09 — GEOTECHNICAL — STATE OF CALIFORNIA

DIST	COUNTY	ROUTE	POST MILES TOTAL PROJECT	SHEET NO.	TOTAL SHEETS
12	Ora	57	11.1/21.2	490	491

Kul Bhushan 12/28/89
GEOTECHNICAL PROFESSIONAL
10-29-90
PLANS APPROVAL DATE

REGISTERED PROFESSIONAL ENGINEER — KUL BHUSHAN — No. GE 000144 — Exp. 12/31/1989 — GEOTECHNICAL — STATE OF CALIFORNIA

GEOFON, INC.
5552 CERRITOS AVENUE, SUITE B
CYPRESS, CALIFORNIA
JOB NO.: 88-351

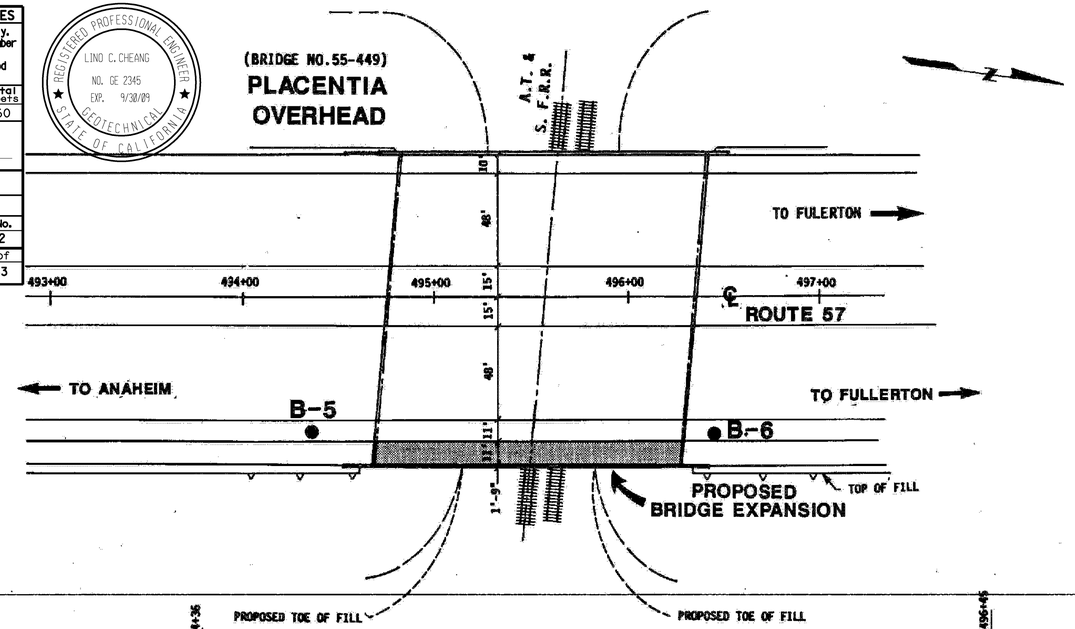

PLAN

SCALE: 1"=40'

PROFILE

VERTICAL SCALE: 1"=10'
HORIZONTAL SCALE: 1"=20'

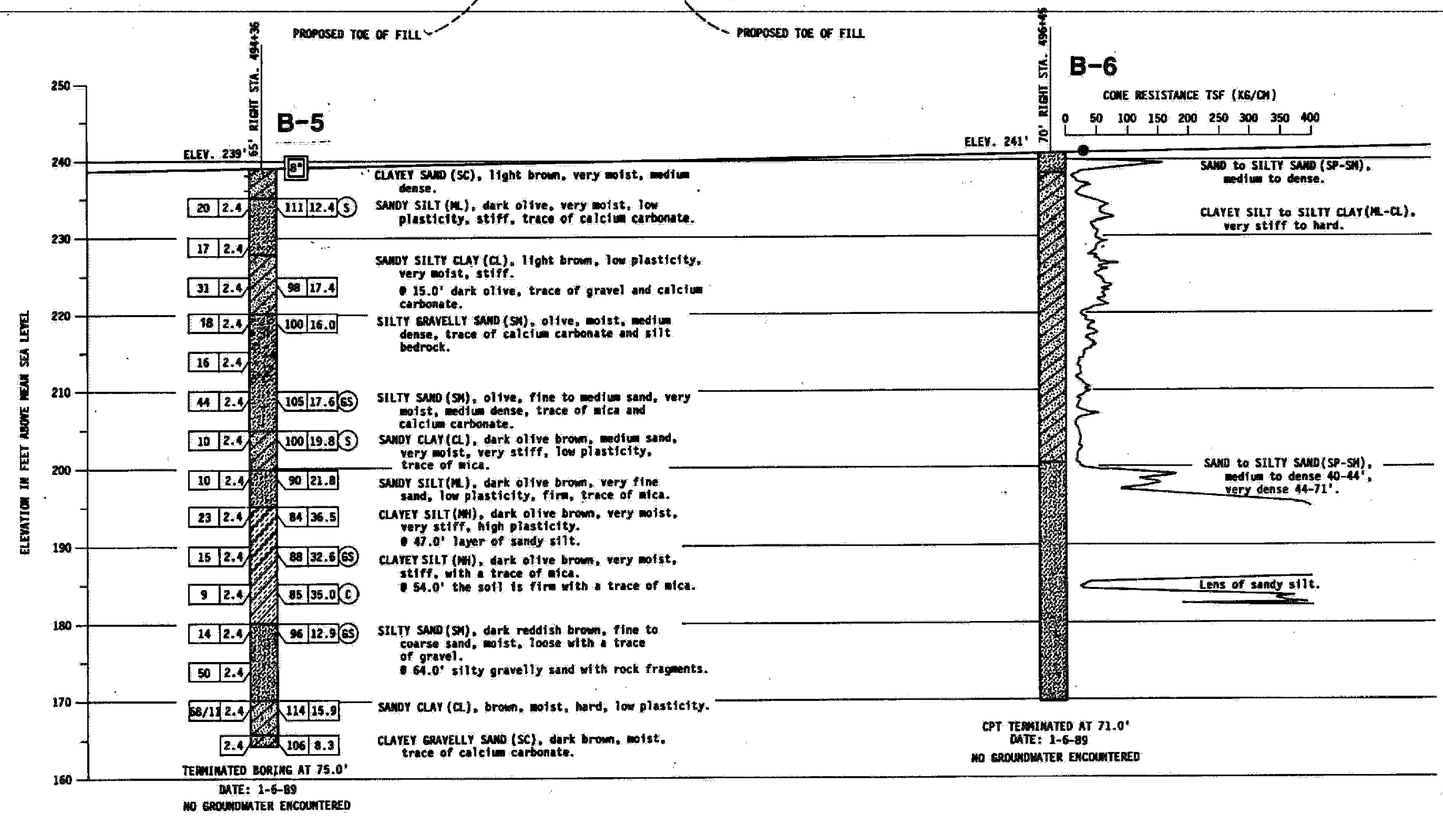

AS BUILT — NO AS BUILT CHANGE
CORRECTIONS BY J. PINHEIRO
CONTRACT NO. 12-020184
DATE 11-23-92

BM 535-D-70 — ELEVATION 257.37

FOUND CHISELED CROSS ON TOP OF THE NW ANCHOR BOLT OF A SIGN BASE 77 FEET EASTERLY OF THE CENTERLINE OF ROUTE 57 (ORANGE FREEWAY) STATION 535+60 AND 105 FEET NORTHERLY OF THE CENTERLINE OF NUTWOOD AVE..

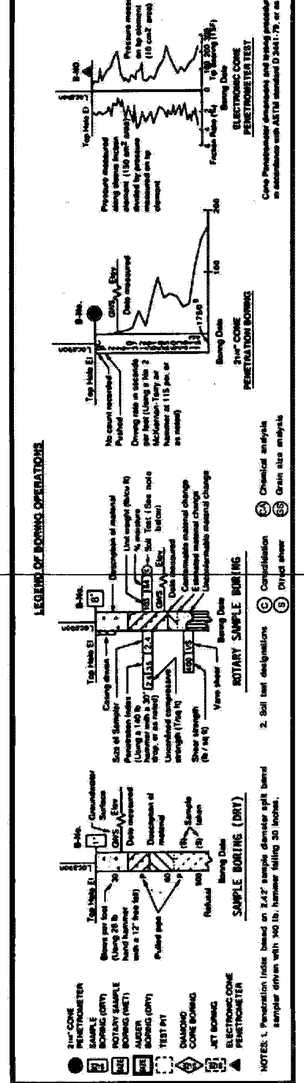

LEGEND OF EARTH MATERIALS: GRAVEL, SAND, SILT, CLAY, SANDY CLAY or CLAYEY SAND, SANDY SILT or SILTY SAND, SILTY CLAY, CLAYEY SILT, PEAT and/or ORGANIC MATTER, FILL MATERIAL, IGNEOUS ROCK, SEDIMENTARY ROCK, METAMORPHIC ROCK

CONSISTENCY CLASSIFICATION FOR SOILS — According to the Standard Penetration Test

Penetration Index (Blows / Ft)	Granular	Cohesive
0-4	Very loose	Very soft
5-9	Loose	Soft
10-19	Slightly compact	Stiff
20-34	Compact	Very stiff
35-69	Dense	Hard
>70	Very dense	Very hard

NOTE: Classification of earth material as shown on this sheet is based upon field inspection and is not to be construed to imply mechanical analysis.

DESIGN OVERSIGHT 8-22-90 SIGN OFF DATE	DRAWN BY B. BASMADJIAN	S. MOHAMAD FIELD INVESTIGATOR	PREPARED FOR THE STATE OF CALIFORNIA DEPARTMENT OF TRANSPORTATION
	CHECKED BY H. ABDALLAH	DATE 12-28-89	

Victor Lee — PROJECT ENGINEER

BRIDGE NO. 55-449 — POST MILE 16.9

PLACENTIA OVERHEAD (WIDEN)

LOG OF TEST BORINGS

ORIGINAL SCALE IN INCHES FOR REDUCED PLANS 0 1 2 3

CU 12208
EA 020181

DISREGARD PRINTS BEARING EARLIER REVISION DATES →

REVISION DATES (PRELIMINARY STAGE ONLY)

SHEET 13 OF 14

FILENAME => 55e-538-z-492-ltb08.tif

FED. ROAD DIV. No.	STATE	F. A. PROJECT No.	SHEET No.	TOTAL SHEETS
7	CALIF.			

DIST.	COUNTY	ROUTE	SECTION	SHEET No.	TOTAL SHEETS
07	ORA	57	15.6/21.8	147	197

BRIDGE ENGINEER — CIVIL ENGINEER LICENSE No.

DATE APPROVED August 28 1967

BENCH MARK

BM # 496-65 Elev. 211.969
Set R/S in N.W. footing of R.R. signal actuator 23.3 ft. E. of ℄ Fwy. ℄ 25 ft.± N. of ℄ at A.T.& S.F. R.R. (Main line)

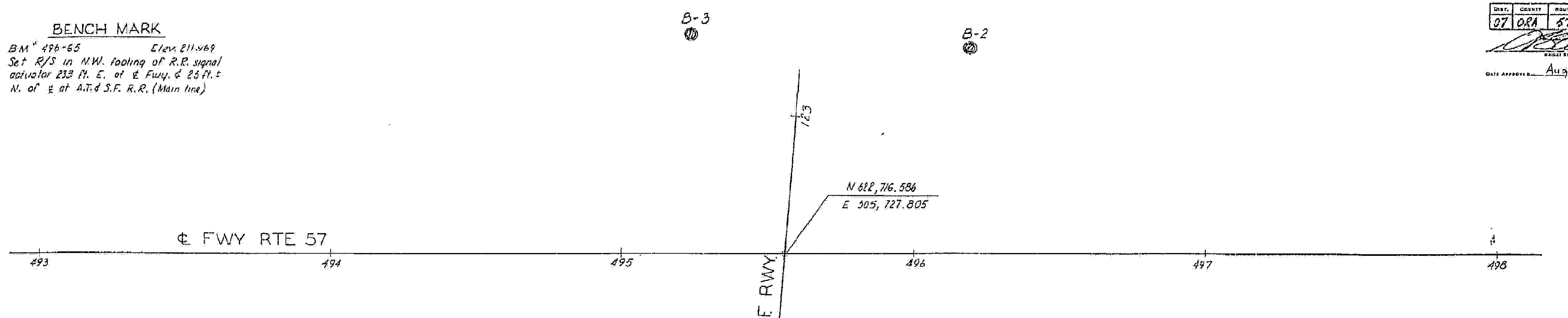

PLAN
Scale 1" = 20'

DIVISION OF ENGINEERING SERVICES - GEOTECHNICAL SERVICES					
As-Built Log of Test Borings sheet is considered an informational document only. As such, the State of California registration seal with signature, license number and registration certificate expiration date confirm that this is a true and accurate copy of the original document. This drawing is available and presented only for the convenience of any bidder, contractor or other interested party.					
DIST.	COUNTY	ROUTE	POST MILES -TOTAL PROJECT	Sheet No.	Total Sheets
12	Ora	57	16.2/18.6	527	960
Lino Cheang — REGISTERED CIVIL ENGINEER				06/17/09 — DATE	
RETAINING WALL NO. 492					
LOG OF TEST BORINGS NO. 9					
NOTE: A COPY OF THIS LOG OF TEST BORINGS IS AVAILABLE AT OFFICE OF STRUCTURE MAINTENANCE AND INVESTIGATIONS, SACRAMENTO, CALIFORNIA			CU: 12 EA: 0F03111	BRIDGE No. 55E0082	

To accompany plans dated 12-14-09 — Sheet 65 of 83

REGISTERED PROFESSIONAL ENGINEER — LINO C. CHEANG — NO. GE 2345 — EXP. 9/30/09 — GEOTECHNICAL — STATE OF CALIFORNIA

AS BUILT PLANS
Contract No. 07-032124
Date Completed
Document No. 70000668

NO GROUND WATER ENCOUNTERED DURING THIS INVESTIGATION BY BRIDGE DEPT. GEOLOGY SECTION
DATE April 1966

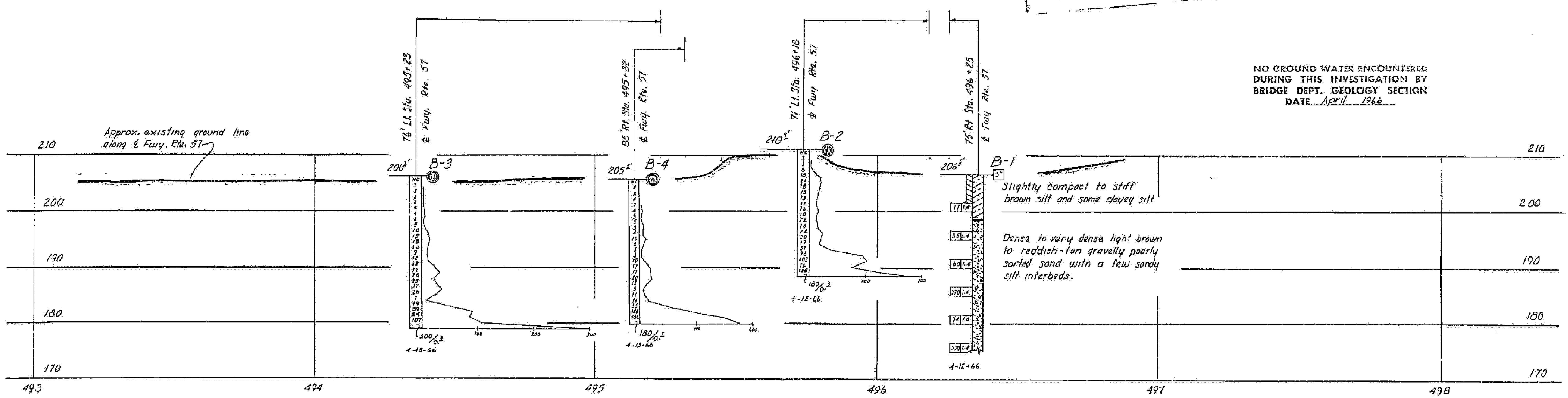

PROFILE
Scale Vert. 1" = 10'
Horiz. 1" = 20'

LEGEND OF BORING OPERATIONS

Penetrometer; 2½" Cone Penetrometer; Sampler Boring (dry); Rotary Boring (wet); Auger Boring (dry); Jet Boring; Core Boring; Test Pit

1" Soil Tube — Top Hole El.; Blows per foot (Using — lb hand hammer with 12" free fall); Pulled pipe; Groundwater surface; Date measured; Description of material; Sample taken; Refusal; Date of boring

Rotary Boring — Top Hole El.; Casing driven; Size of sampler (inches); Blows per foot (Using a 140 lb hammer with a 30" drop, or as noted); Unconfined compressive strength (T/sq ft); Vane shear; Shear strength (T/sq ft); Description of material; Unit weight (lb/cu ft); % Moisture; Consolidation Test; GWS Elev.; Date measured; Conformable material change; Estimated material change; Unconformable material change; Date of boring

Penetration Boring — Top Hole El.; Pushed; No count recorded; Seconds per foot (Using a McKiernan-Terry Air hammer @ 115 psi or as noted); Average skin friction above this point (T/sq ft); Graphic representation of driving rate; Cone; Date

LEGEND OF EARTH MATERIALS

Gravel; Sand; Silt; Clay; Sandy Clay or Clayey Sand; Sandy Silt or Silty Sand; Silty Clay or Clayey Silt; Peat and/or Organic Matter; Fill Material; Igneous Rock; Sedimentary Rock; Metamorphic Rock

CLASSIFICATION OF MATERIAL BASED ON STANDARD GRADE SIZE LIMITS

Diagram showing the basis for estimates of grade size distribution used in determination of class names. If gravel is present in appreciable amounts the term "gravelly" may be added to the class name, viz. "gravelly sand". The terms "coarse", "medium" and "fine" when used to describe sand, silt and gravel refer to standard grade size limits.

NOTE: Classification of earth material as shown on this sheet is based upon field inspection and is not to be construed to imply mechanical analysis.

FIELD STUDY	By	D. CRAWFORD	4-13-66
DRAWN	By	M. ALLREAD	4-21-66
CHECKED	By	W. CAIN	5-6-66
Approval Recommended By		Engineering Geologist	

BRIDGE DEPARTMENT
ENGINEERING GEOLOGY SECTION

AS BUILT
CORRECTIONS BY Hixson 7-28-69
CONTRACT NO. 07-032124
DATE 5-11-69

SHEET	OF
13	13

STATE OF CALIFORNIA
DEPARTMENT OF PUBLIC WORKS
DIVISION OF HIGHWAYS

PLACENTIA OVERHEAD

LOG OF TEST BORINGS

SCALE As Noted | BRIDGE 55-449 R/L | FILE | DRAWING 55449-16

Charge 07208
W.A. 032121

Disregard prints bearing earlier numbers → PREL. DRAWING No. PR- 8/67

FILENAME => 55e-538-z-492-ltb09.tif

147

Dist	COUNTY	ROUTE	POST MILES TOTAL PROJECT	SHEET No.	TOTAL SHEETS
12	Ora	57	16.2/18.6	528	960

REGISTERED CIVIL ENGINEER — DATE 06/17/09

12-14-09
PLANS APPROVAL DATE

REGISTERED PROFESSIONAL ENGINEER — Chien-Tai Yang — No. C 66394 — Exp. 6-30-10 — CIVIL — STATE OF CALIFORNIA

THE STATE OF CALIFORNIA OR ITS OFFICERS OR AGENTS SHALL NOT BE RESPONSIBLE FOR THE ACCURACY OR COMPLETENESS OF SCANNED COPIES OF THIS PLAN SHEET.

ORANGE COUNTY TRANSPORTATION AUTHORITY
550 S. MAIN STREET
ORANGE, CA 92863-1584

EARTH MECHANICS, INC.
17660 NEWHOPE STREET, SUITE E
FOUNTAIN VALLEY, CA 92708

BENCHMARKS:

Vertical Datum NAVD 88

Designation: 1L-54-82 Elev = 153.171
Described by OCS 2002 - Found 3¾" OCS Aluminum Benchmark Disk Stamped "1L-54-82", set in the Top of a 6 in. by 6 in. Concrete Post. Monument is located along the Westerly Levee of the Santa Ana River, 0.25 Miles Northerly along Levee from the Centerline of Orangewood Avenue, 200 ft. Northeasterly of the Easterly Leg of the Anaheim Angels 200 ft. tall sign, 69 ft. Westerly of the Centerline of the Bike Trail and 1.5 ft. Westerly of a Steel OCS Witness Post. Monument is set 0.3 below the Ground.

Designation: 2G-25-70 Elev = 275.872
Described by OCS 2003 - Found 3¾" OCS Aluminum Benchmark Disk Stamped "2G-25-70", set in the Southeasterly Corner of a 4 ft by 6 ft Concrete Catch Basin. Monument is Located in the Northwesterly Corner of the Intersection of Yorba Linda Boulevard and Deerpark Drive, 75 ft Westerly of the Centerline of Deerpark and 46 ft Northerly of the Centerline of Yorba Linda. Monument is set Level with the Sidewalk.

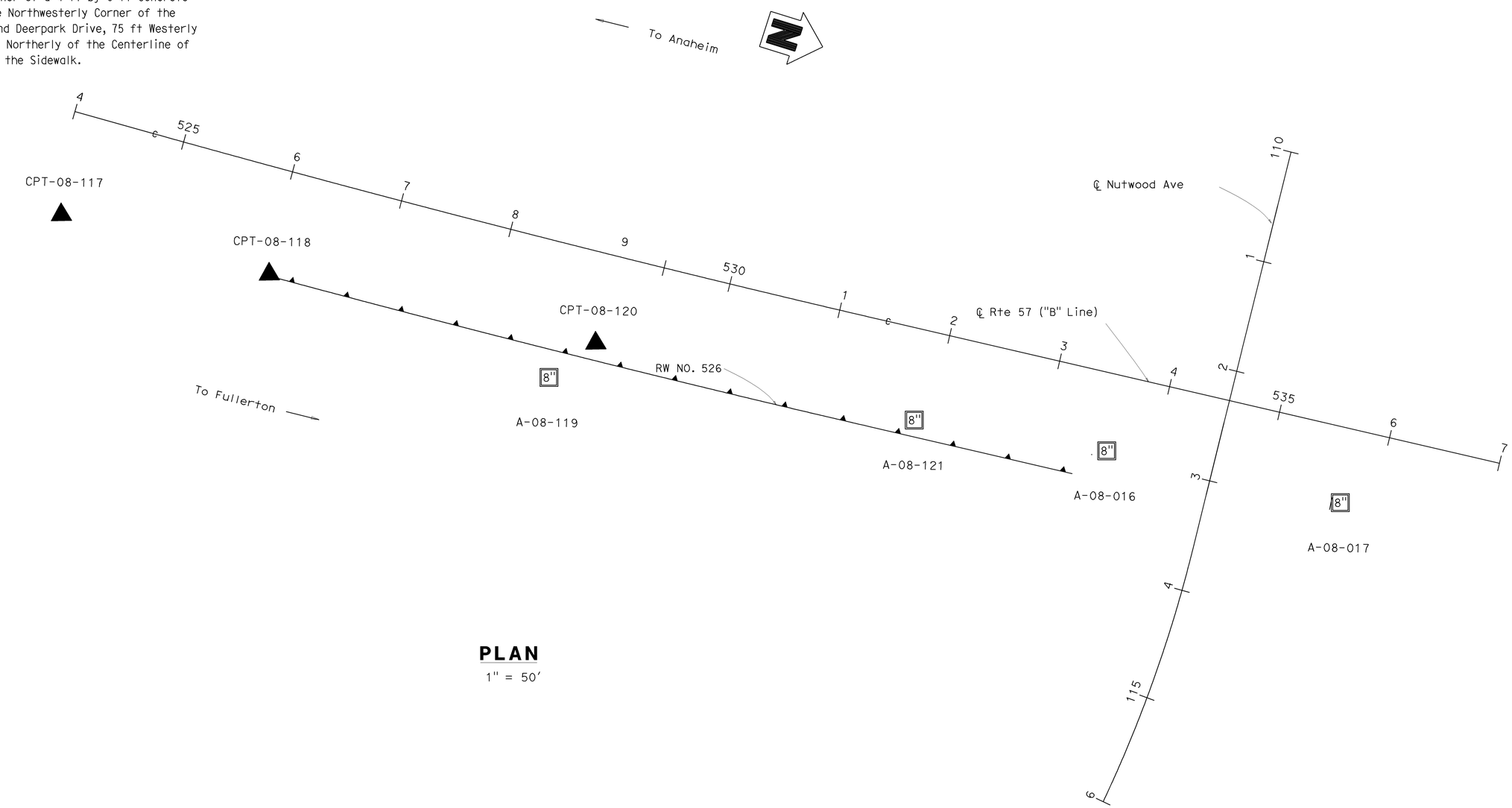

PLAN
1" = 50'

DESIGN OVERSIGHT Jon Hanaguchi
6-24-09
SIGN OFF DATE

DRAWN BY: J.Fang
CHECKED BY: L.Cheang

FIELD INVESTIGATION BY:
R.Jie

PREPARED FOR THE
STATE OF CALIFORNIA
DEPARTMENT OF TRANSPORTATION

C. Yang
PROJECT ENGINEER

BRIDGE NO. 55E0084
POST MILES 16.2/18.6

RETAINING WALL NO. 526
LOG OF TEST BORINGS NO. 1

DESIGN GENERAL PLAN SHEET (ENGLISH) (REV. 2/25/05)

ORIGINAL SCALE IN INCHES FOR REDUCED PLANS 0 1 2 3

CU 12
EA 0F0311

DISREGARD PRINTS BEARING EARLIER REVISION DATES

REVISION DATES (PRELIMINARY STAGE ONLY) 4/30/09

SHEET 66 OF 83

FILE => 55e-538-z-526-1tb01.dgn

USERNAME => trrene DATE PLOTTED => 17-DEC-2009 TIME PLOTTED => 10:07

Dist	COUNTY	ROUTE	POST MILES TOTAL PROJECT	SHEET No.	TOTAL SHEETS
12	Ora	57	16.2/18.6	529	960

REGISTERED CIVIL ENGINEER — DATE 06/17/09

12-14-09
PLANS APPROVAL DATE

REGISTERED PROFESSIONAL ENGINEER — Chien-Tai Yang — No. C 66394 — Exp. 6-30-10 — CIVIL — STATE OF CALIFORNIA

THE STATE OF CALIFORNIA OR ITS OFFICERS OR AGENTS SHALL NOT BE RESPONSIBLE FOR THE ACCURACY OR COMPLETENESS OF SCANNED COPIES OF THIS PLAN SHEET.

ORANGE COUNTY TRANSPORTATION AUTHORITY
550 S. MAIN STREET
ORANGE, CA 92863-1584

EARTH MECHANICS, INC.
17660 NEWHOPE STREET, SUITE E
FOUNTAIN VALLEY, CA 92708

FOR PLAN VIEW SEE "RETAINING WALL NO. 526, LOG OF TEST BORINGS NO. 1"

NOTES:

(1) This LOTB sheet was prepared in accordance with the Caltrans Soil and Rock Logging, Classification and Presentation Manual (June 2007)
(2) 2.4" samples were taken using a California Modified Sampler.
(3) An automatic trip hammer system consisting of a hammer weight of 140 lbs falling a distance of 30" was used to advance the drive sampler.
(4) Conversion factor from 2.4" Modified California Ring Sampler blowcounts to Standard Penetration Test (SPT) blowcounts is 0.5.

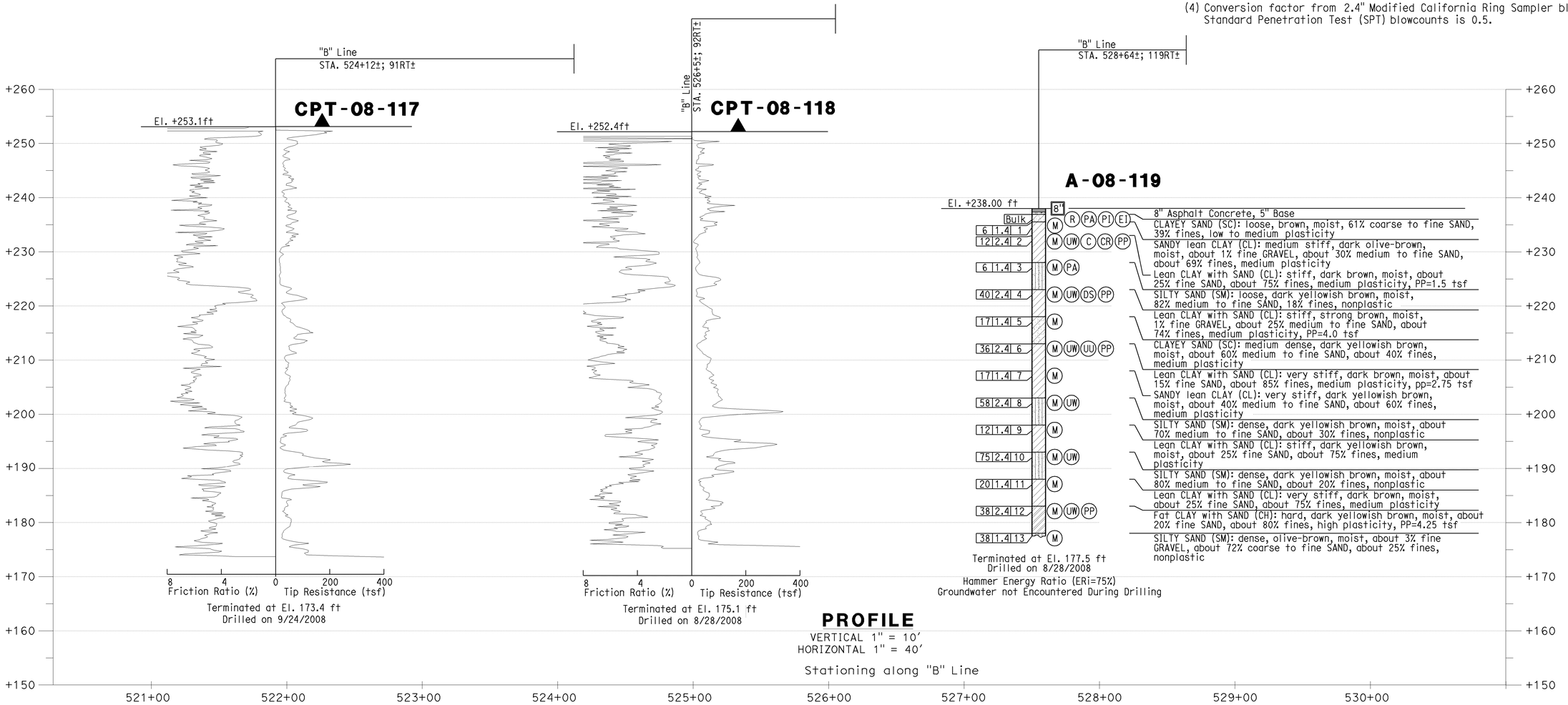

PROFILE
VERTICAL 1" = 10'
HORIZONTAL 1" = 40'
Stationing along "B" Line

DESIGN OVERSIGHT — Jon Hanaguchi
6-24-09
SIGN OFF DATE

DRAWN BY: J.Fang
CHECKED BY: L.Cheang

FIELD INVESTIGATION BY:
R.Jie

PREPARED FOR THE STATE OF CALIFORNIA DEPARTMENT OF TRANSPORTATION

C.Yang
PROJECT ENGINEER

BRIDGE NO. 55E0084
POST MILES 16.2/18.6

RETAINING WALL NO. 526
LOG OF TEST BORINGS NO. 2

DESIGN GENERAL PLAN SHEET (ENGLISH) (REV. 2/25/05)

ORIGINAL SCALE IN INCHES FOR REDUCED PLANS 0 1 2 3

CU 12
EA 0F0311

DISREGARD PRINTS BEARING EARLIER REVISION DATES
REVISION DATES (PRELIMINARY STAGE ONLY) 4/30/09

SHEET 67 OF 83

FILE => 55e-538-z-526-ltb02.dgn

USERNAME => trrene DATE PLOTTED => 17-DEC-2009 TIME PLOTTED => 10:07

Dist	COUNTY	ROUTE	POST MILES TOTAL PROJECT	SHEET No.	TOTAL SHEETS
12	Ora	57	16.2/18.6	530	960

REGISTERED CIVIL ENGINEER 06/17/09 DATE

12-14-09
PLANS APPROVAL DATE

REGISTERED PROFESSIONAL ENGINEER Chien-Tai Yang No. C 66394 Exp. 6-30-10 CIVIL STATE OF CALIFORNIA

THE STATE OF CALIFORNIA OR ITS OFFICERS OR AGENTS SHALL NOT BE RESPONSIBLE FOR THE ACCURACY OR COMPLETENESS OF SCANNED COPIES OF THIS PLAN SHEET.

ORANGE COUNTY TRANSPORTATION AUTHORITY
550 S. MAIN STREET
ORANGE, CA 92863-1584

EARTH MECHANICS, INC.
17660 NEWHOPE STREET, SUITE E
FOUNTAIN VALLEY, CA 92708

NOTES:

(1) This LOTB sheet was prepared in accordance with the Caltrans Soil and Rock Logging, Classification and Presentation Manual (June 2007)
(2) 2.4" samples were taken using a California Modified Sampler.
(3) An automatic trip hammer system consisting of a hammer weight of 140 lbs falling a distance of 30" was used to advance the drive sampler.
(4) Conversion factor from 2.4" Modified California Ring Sampler blowcounts to Standard Penetration Test (SPT) blowcounts is 0.5.

FOR PLAN VIEW SEE "RETAINING WALL NO. 526, LOG OF TEST BORINGS NO. 1"

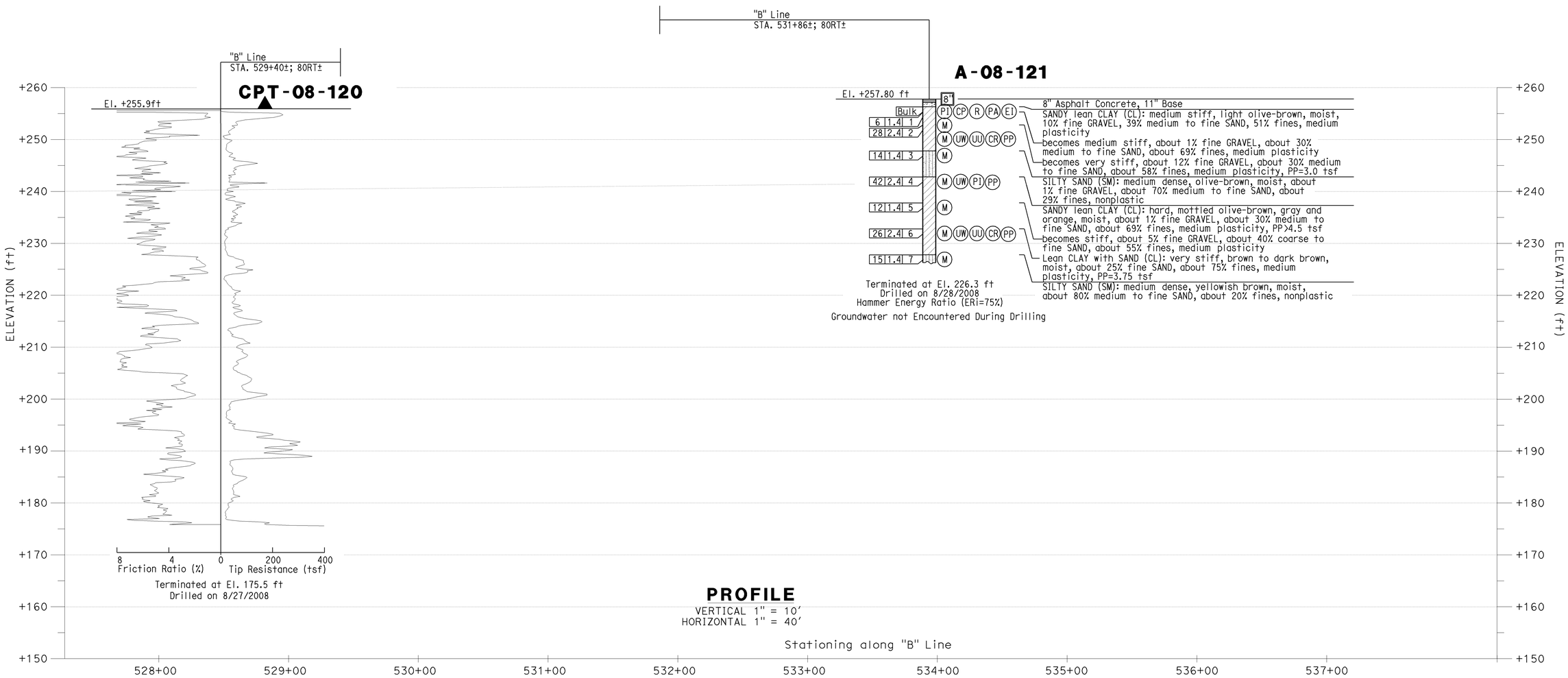

PROFILE
VERTICAL 1" = 10'
HORIZONTAL 1" = 40'

DESIGN OVERSIGHT Jon Hanaguchi
6-24-09
SIGN OFF DATE

DRAWN BY: J.Fang
CHECKED BY: L.Cheang

FIELD INVESTIGATION BY:
R.Jie

PREPARED FOR THE STATE OF CALIFORNIA DEPARTMENT OF TRANSPORTATION

C.Yang
PROJECT ENGINEER

BRIDGE NO. 55E0084
POST MILES 16.2/18.6

RETAINING WALL NO. 526
LOG OF TEST BORINGS NO. 3

DESIGN GENERAL PLAN SHEET (ENGLISH) (REV. 2/25/05)

ORIGINAL SCALE IN INCHES FOR REDUCED PLANS 0 1 2 3

CU 12
EA 0F0311

DISREGARD PRINTS BEARING EARLIER REVISION DATES

REVISION DATES (PRELIMINARY STAGE ONLY) 4/30/09

SHEET 68 OF 83

FILE => 55e-538-z-526-1tb03.dgn

USERNAME => ttrene DATE PLOTTED => 17-DEC-2009 TIME PLOTTED => 10:07

Dist	COUNTY	ROUTE	POST MILES TOTAL PROJECT	SHEET No.	TOTAL SHEETS
12	Ora	57	16.2/18.6	531	960

REGISTERED CIVIL ENGINEER 06/17/09 DATE

12-14-09
PLANS APPROVAL DATE

REGISTERED PROFESSIONAL ENGINEER Chien-Tai Yang No. C 66394 Exp. 6-30-10 CIVIL STATE OF CALIFORNIA

THE STATE OF CALIFORNIA OR ITS OFFICERS OR AGENTS SHALL NOT BE RESPONSIBLE FOR THE ACCURACY OR COMPLETENESS OF SCANNED COPIES OF THIS PLAN SHEET.

ORANGE COUNTY TRANSPORTATION AUTHORITY
550 S. MAIN STREET
ORANGE, CA 92863-1584

EARTH MECHANICS, INC.
17660 NEWHOPE STREET, SUITE E
FOUNTAIN VALLEY, CA 92708

FOR PLAN VIEW SEE "RETAINING WALL NO. 526, LOG OF TEST BORINGS NO. 1"

NOTES:

(1) This LOTB sheet was prepared in accordance with the Caltrans Soil and Rock Logging, Classification and Presentation Manual (June 2007)
(2) 2.4" samples were taken using a California Modified Sampler.
(3) An automatic trip hammer system consisting of a hammer weight of 140 lbs falling a distance of 30" was used to advance the drive sampler.
(4) Conversion factor from 2.4" Modified California Ring Sampler blowcounts to Standard Penetration Test (SPT) blowcounts is 0.5.

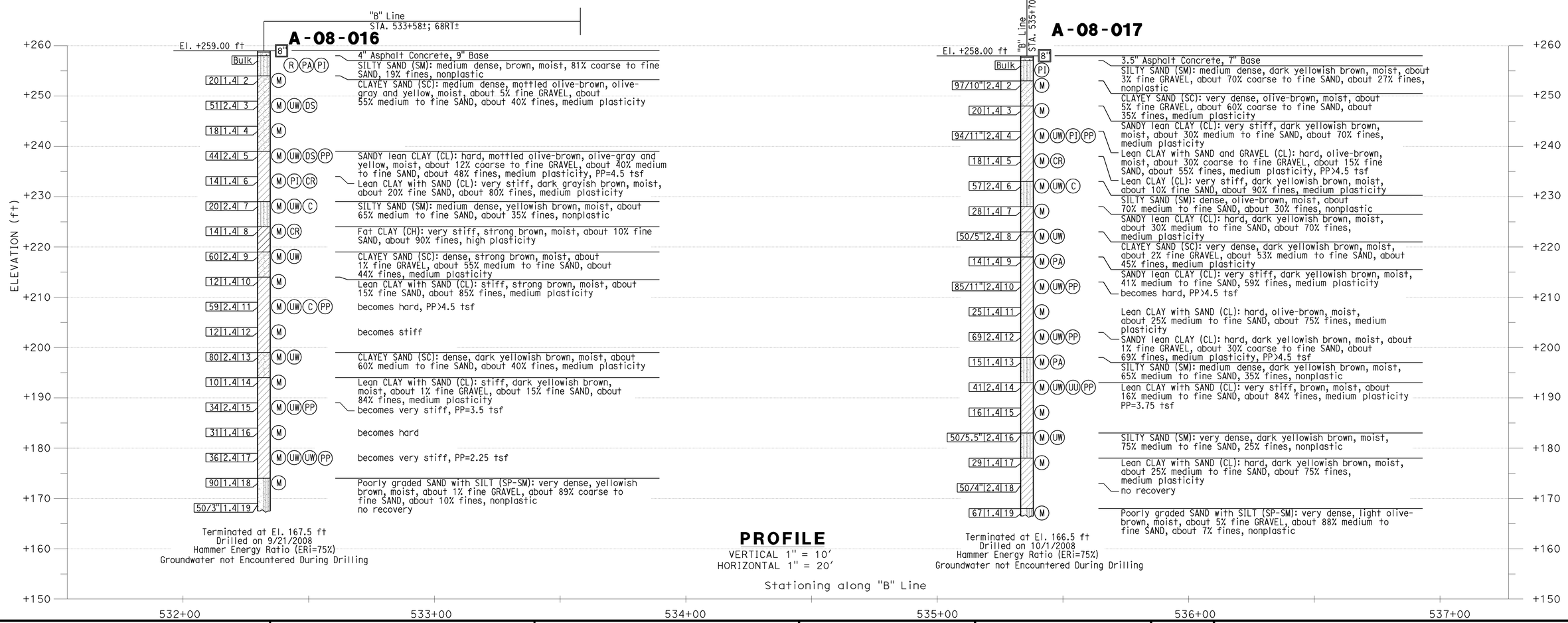

DESIGN OVERSIGHT Jon Hamaguchi 6-24-09 SIGN OFF DATE	DRAWN BY: J.Fang CHECKED BY: L.Cheang	FIELD INVESTIGATION BY: R.Jie	PREPARED FOR THE STATE OF CALIFORNIA DEPARTMENT OF TRANSPORTATION	C.Yang PROJECT ENGINEER	BRIDGE NO. 55E0084 POST MILES 16.2/18.6

RETAINING WALL NO. 526
LOG OF TEST BORINGS NO. 4

DESIGN GENERAL PLAN SHEET (ENGLISH) (REV. 2/25/05)

ORIGINAL SCALE IN INCHES FOR REDUCED PLANS 0 1 2 3

CU 12
EA 0F0311

DISREGARD PRINTS BEARING EARLIER REVISION DATES → 4/30/09

REVISION DATES (PRELIMINARY STAGE ONLY)

SHEET 69 OF 83

FILE => 55e-538-z-526-ltb04.dgn

USERNAME => trrene DATE PLOTTED => 17-DEC-2009 TIME PLOTTED => 10:07

Dist	COUNTY	ROUTE	POST MILES TOTAL PROJECT	SHEET No.	TOTAL SHEETS
12	Ora	57	16.2/18.6	532	960

REGISTERED CIVIL ENGINEER — DATE 06/17/09

12-14-09
PLANS APPROVAL DATE

REGISTERED PROFESSIONAL ENGINEER — Chien-Tai Yang — No. C 66394 — Exp. 6-30-10 — CIVIL — STATE OF CALIFORNIA

THE STATE OF CALIFORNIA OR ITS OFFICERS OR AGENTS SHALL NOT BE RESPONSIBLE FOR THE ACCURACY OR COMPLETENESS OF SCANNED COPIES OF THIS PLAN SHEET.

ORANGE COUNTY TRANSPORTATION AUTHORITY
550 S. MAIN STREET
ORANGE, CA 92863-1584

EARTH MECHANICS, INC.
17660 NEWHOPE STREET, SUITE E
FOUNTAIN VALLEY, CA 92708

REFERENCE: CALTRANS SOIL & ROCK LOGGING, CLASSIFICATION, AND PRESENTATION MANUAL (JUNE 2007)

CEMENTATION

Description	Criteria
Weak	Crumbles or breaks with handling or little finger pressure.
Moderate	Crumbles or breaks with considerable finger pressure.
Strong	Will not crumble or break with finger pressure.

CONSISTENCY OF COHESIVE SOILS

Description	Unconfined Compressive Strength (tsf)	Pocket Penetrometer Measurement (tsf)	Torvane Measurement (tsf)	Field Approximation
Very Soft	< 0.25	< 0.25	< 0.12	Easily penetrated several inches by fist
Soft	0.25 to 0.50	0.25 to 0.50	0.12 to 0.25	Easily penetrated several inches by thumb
Medium Stiff	0.50 to 1.0	0.50 to 1.0	0.25 to 0.50	Penetrated several inches by thumb with moderate effort
Stiff	1 to 2	1 to 2	0.50 to 1.0	Readily indented by thumb but penetrated only with great effort
Very Stiff	2 to 4	2 to 4	1.0 to 2.0	Readily indented by thumbnail
Hard	> 4.0	> 4.0	> 2.0	Indented by thumbnail with difficulty

BOREHOLE IDENTIFICATION

Symbol	Hole Type	Description
Size	A	Auger Boring
Size	R P	Rotary drilled boring Rotary percussion boring (air)
Size	R	Rotary drilled diamond core
Size	HD HA	Hand driven (1-inch soil tube) Hand Auger
●	D	Dynamic Cone Penetration Boring
▲	CPT	Cone Penetration Test (ASTM D 5778-95)
⬚	O	Other

Note: Size in inches.

PLASTICITY OF FINE-GRAINED SOILS

Description	Criteria
Nonplastic	A 1/8-inch thread cannot be rolled at any water content.
Low	The thread can barely be rolled and the lump cannot be formed when drier than the plastic limit.
Medium	The thread is easy to roll and not much time is required to reach the plastic limit. The thread cannot be rerolled after reaching the plastic limit. The lump crumbles when drier than the plastic limit.
High	It takes considerable time rolling and kneading to reach the plastic limit. The thread can be rerolled several times after reaching the plastic limit. The lump can be formed without crumbling when drier than the plastic limit.

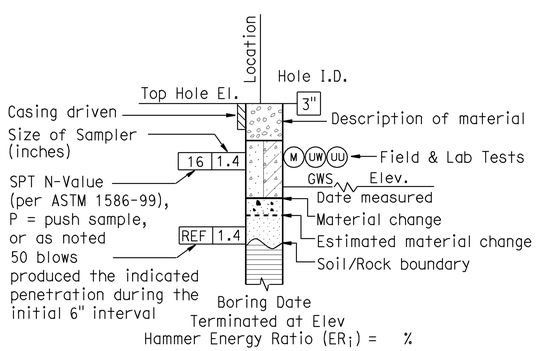

ROTARY BORING

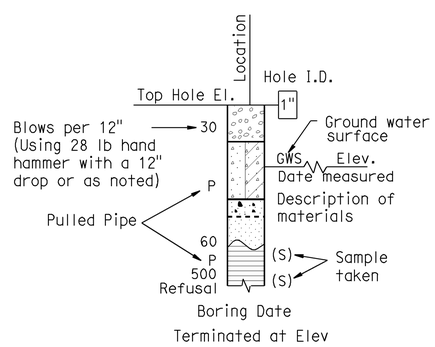

HAND BORING

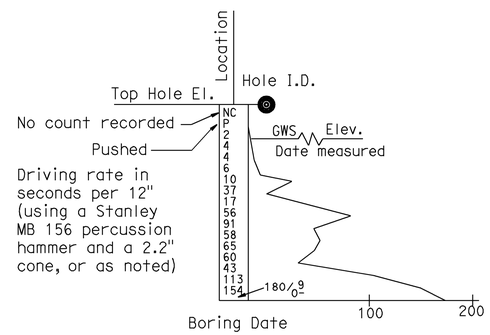

DYNAMIC CONE PENETRATION BORING

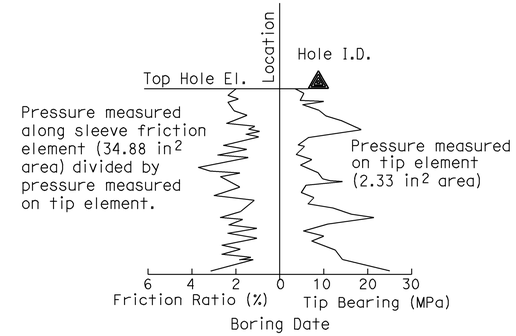

CONE PENETRATION TEST (CPT) SOUNDING

DESIGN OVERSIGHT — Jon Hanaguchi
6-24-09
SIGN OFF DATE

DRAWN BY: J.Fang
CHECKED BY: L.Cheang

FIELD INVESTIGATION BY: R.Jie

PREPARED FOR THE STATE OF CALIFORNIA DEPARTMENT OF TRANSPORTATION

C.Yang
PROJECT ENGINEER

BRIDGE NO. 55E0084
POST MILES 16.2/18.6

RETAINING WALL NO. 526
LOG OF TEST BORINGS NO. 5

DESIGN GENERAL PLAN SHEET (ENGLISH) (REV. 2/25/05)

ORIGINAL SCALE IN INCHES FOR REDUCED PLANS 0 1 2 3

CU 12
EA 0F0311

DISREGARD PRINTS BEARING EARLIER REVISION DATES

REVISION DATES (PRELIMINARY STAGE ONLY)

SHEET 70 OF 83

FILE => 55e-538-z-526-ltb05.dgn

USERNAME => ttrene DATE PLOTTED => 17-DEC-2009 TIME PLOTTED => 10:07

REFERENCE: CALTRANS SOIL & ROCK LOGGING, CLASSIFICATION, AND PRESENTATION MANUAL (JUNE 2007)

GROUP SYMBOLS AND NAMES

Graphic/Symbol	Group Names
GW	Well-graded GRAVEL Well-graded GRAVEL with SAND
GP	Poorly graded GRAVEL Poorly graded GRAVEL with SAND
GW-GM	Well-graded GRAVEL with SILT Well-graded GRAVEL with SILT and SAND
GW-GC	Well-graded GRAVEL with CLAY (or SILTY CLAY) Well-graded GRAVEL with CLAY and SAND (or SILTY CLAY and SAND)
GP-GM	Poorly graded GRAVEL with SILT Poorly graded GRAVEL with SILT and SAND
GP-GC	Poorly graded GRAVEL with CLAY (or SILTY CLAY) Poorly graded GRAVEL with CLAY and SAND (or SILTY CLAY and SAND)
GM	SILTY GRAVEL SILTY GRAVEL with SAND
GC	CLAYEY GRAVEL CLAYEY GRAVEL with SAND
GC-GM	SILTY, CLAYEY GRAVEL SILTY, CLAYEY GRAVEL with SAND
SW	Well-graded SAND Well-graded SAND with GRAVEL
SP	Poorly graded SAND Poorly graded SAND with GRAVEL
SW-SM	Well-graded SAND with SILT Well-graded SAND with SILT and GRAVEL
SW-SC	Well-graded SAND with CLAY (or SILTY CLAY) Well-graded SAND with CLAY and GRAVEL (or SILTY CLAY and GRAVEL)
SP-SM	Poorly graded SAND with SILT Poorly graded SAND with SILT and GRAVEL
SP-SC	Poorly graded SAND with CLAY (or SILTY CLAY) Poorly graded SAND with CLAY and GRAVEL (or SILTY CLAY and GRAVEL)
SM	SILTY SAND SILTY SAND with GRAVEL
SC	CLAYEY SAND CLAYEY SAND with GRAVEL
SC-SM	SILTY, CLAYEY SAND SILTY, CLAYEY SAND with GRAVEL
PT	PEAT
	COBBLES COBBLES and BOULDERS BOULDERS

Graphic/Symbol	Group Names
CL	Lean CLAY Lean CLAY with SAND Lean CLAY with GRAVEL SANDY lean CLAY SANDY lean CLAY with GRAVEL GRAVELLY lean CLAY GRAVELLY lean CLAY with SAND
CL-ML	SILTY CLAY SILTY CLAY with SAND SILTY CLAY with GRAVEL SANDY SILTY CLAY SANDY SILTY CLAY with GRAVEL GRAVELLY SILTY CLAY GRAVELLY SILTY CLAY with SAND
ML	SILT SILT with SAND SILT with GRAVEL SANDY SILT SANDY SILT with GRAVEL GRAVELLY SILT GRAVELLY SILT with SAND
OL	ORGANIC lean CLAY ORGANIC lean CLAY with SAND ORGANIC lean CLAY with GRAVEL SANDY ORGANIC lean CLAY SANDY ORGANIC lean CLAY with GRAVEL GRAVELLY ORGANIC lean CLAY GRAVELLY ORGANIC lean CLAY with SAND
OL	ORGANIC SILT ORGANIC SILT with SAND ORGANIC SILT with GRAVEL SANDY ORGANIC SILT SANDY ORGANIC SILT with GRAVEL GRAVELLY ORGANIC SILT GRAVELLY ORGANIC SILT with SAND
CH	Fat CLAY Fat CLAY with SAND Fat CLAY with GRAVEL SANDY fat CLAY SANDY fat CLAY with GRAVEL GRAVELLY fat CLAY GRAVELLY fat CLAY with SAND
MH	Elastic SILT Elastic SILT with SAND Elastic SILT with GRAVEL SANDY elastic SILT SANDY elastic SILT with GRAVEL GRAVELLY elastic SILT GRAVELLY elastic SILT with SAND
OH	ORGANIC fat CLAY ORGANIC fat CLAY with SAND ORGANIC fat CLAY with GRAVEL SANDY ORGANIC fat CLAY SANDY ORGANIC fat CLAY with GRAVEL GRAVELLY ORGANIC fat CLAY GRAVELLY ORGANIC fat CLAY with SAND
OH	ORGANIC elastic SILT ORGANIC elastic SILT with SAND ORGANIC elastic SILT with GRAVEL SANDY ORGANIC elastic SILT SANDY ORGANIC elastic SILT with GRAVEL GRAVELLY ORGANIC elastic SILT GRAVELLY ORGANIC elastic SILT with SAND
OL/OH	ORGANIC SOIL ORGANIC SOIL with SAND ORGANIC SOIL with GRAVEL SANDY ORGANIC SOIL SANDY ORGANIC SOIL with GRAVEL GRAVELLY ORGANIC SOIL GRAVELLY ORGANIC SOIL with SAND

FIELD AND LABORATORY TESTING

- (C) Consolidation (ASTM D 2435)
- (CL) Collapse Potential (ASTM D 5333)
- (CP) Compaction Curve (CTM 216)
- (CR) Corrosivity Testing (CTM 643, CTM 422, CTM 417)
- (CU) Consolidated Undrained Triaxial (ASTM D 4767)
- (DS) Direct Shear (ASTM D 3080)
- (EI) Expansion Index (ASTM D 4829)
- (M) Moisture Content (ASTM D 2216)
- (OC) Organic Content-% (ASTM D 2974)
- (P) Permeability (CTM 220)
- (PA) Particle Size Analysis (ASTM D 422)
- (PI) Plasticity Index (AASHTO T 90) Liquid Limit (AASHTO T 89)
- (PL) Point Load Index (ASTM D 5731)
- (PM) Pressure Meter
- (PP) Pocket Penetrometer
- (R) R-Value (CTM 301)
- (SE) Sand Equivalent (CTM 217)
- (SG) Specific Gravity (AASHTO T 100)
- (SL) Shrinkage Limit (ASTM D 427)
- (SW) Swell Potential (ASTM D 4546)
- (TV) Pocket Torvane
- (UC) Unconfined Compression-Soil (ASTM D 2166) Unconfined Compression-Rock (ASTM D 2938)
- (UU) Unconsolidated Undrained Triaxial (ASTM D 2850)
- (UW) Unit Weight (ASTM D 4767)
- (VS) Vane Shear (AASHTO T 223)

Dist	COUNTY	ROUTE	POST MILES TOTAL PROJECT	SHEET No.	TOTAL SHEETS
12	Ora	57	16.2/18.6	533	960

REGISTERED CIVIL ENGINEER — DATE 06/17/09

12-14-09
PLANS APPROVAL DATE

REGISTERED PROFESSIONAL ENGINEER — Chien-Tai Yang — No. C 66394 — Exp. 6-30-10 — CIVIL — STATE OF CALIFORNIA

THE STATE OF CALIFORNIA OR ITS OFFICERS OR AGENTS SHALL NOT BE RESPONSIBLE FOR THE ACCURACY OR COMPLETENESS OF SCANNED COPIES OF THIS PLAN SHEET.

ORANGE COUNTY TRANSPORTATION AUTHORITY
550 S. MAIN STREET
ORANGE, CA 92863-1584

EARTH MECHANICS, INC.
17660 NEWHOPE STREET, SUITE E
FOUNTAIN VALLEY, CA 92708

APPARENT DENSITY OF COHESIONLESS SOILS

Description	SPT N_{60} (Blows / 12 inches)
Very loose	0 - 4
Loose	5 - 10
Medium Dense	11 - 30
Dense	31 - 50
Very Dense	> 50

MOISTURE

Description	Criteria
Dry	Absence of moisture, dusty, dry to the touch
Moist	Damp but no visible water
Wet	Visible free water, usually soil is below water table

PERCENT OR PROPORTION OF SOILS

Description	Criteria
Trace	Particles are present but estimated to be less than 5%
Few	5 to 10%
Little	15 to 25%
Some	30 to 45%
Mostly	50 to 100%

PARTICLE SIZE

Description		Size
Boulder		> 12"
Cobble		3" to 12"
Gravel	Coarse	3/4" to 3"
	Fine	No. 4 to 3/4"
Sand	Coarse	No. 10 to No. 4
	Medium	No. 40 to No. 10
	Fine	No. 200 to No. 40

DESIGN OVERSIGHT — Jon Hamaguchi
6-24-09
SIGN OFF DATE

DRAWN BY: J.Fang
CHECKED BY: L.Cheang

FIELD INVESTIGATION BY:
R.Jie

PREPARED FOR THE STATE OF CALIFORNIA DEPARTMENT OF TRANSPORTATION

C.Yang
PROJECT ENGINEER

BRIDGE NO. 55E0084
POST MILES 16.2/18.6

RETAINING WALL NO. 526
LOG OF TEST BORINGS NO. 6

DESIGN GENERAL PLAN SHEET (ENGLISH) (REV. 2/25/05)

ORIGINAL SCALE IN INCHES FOR REDUCED PLANS 0 1 2 3

CU 12
EA 0F0311

DISREGARD PRINTS BEARING EARLIER REVISION DATES

REVISION DATES (PRELIMINARY STAGE ONLY)

SHEET 71 OF 83

FILE => 55e-538-z-526-ltb06.dgn

USERNAME => trrene DATE PLOTTED => 17-DEC-2009 TIME PLOTTED => 10:08

FED. ROAD DIST. NO.	STATE	F.A. PROJECT NO.	SHEET NO.	TOTAL SHEETS
7	CALIF.			

DIST.	COUNTY	ROUTE	SECTION	SHEET NO.	TOTAL SHEETS
07	ORA	57	15.6/18.6	197	197

Date Approved: August 28, 1967

BENCH MARK

BM "519R-65 Elev. 217.59
Set R/S in N. curb of Chapman Ave.
@ E.C.R. from Placentia Ave. 48' W. of
Placentia & 31' N. of ℄ Chapman

DIVISION OF ENGINEERING SERVICES - GEOTECHNICAL SERVICES

As-Built Log of Test Borings sheet is considered an informational document only. As such, the State of California registration seal with signature, license number and registration certificate expiration date confirm that this is a true and accurate copy of the original document. This drawing is available and presented only for the convenience of any bidder, contractor or other interested party.

DIST.	COUNTY	ROUTE	POST MILES -TOTAL PROJECT	Sheet No.	Total Sheets
12	Ora	57	16.2/18.6	534	960

Lino Cheang — 06/17/09
REGISTERED CIVIL ENGINEER — DATE

RETAINING WALL NO. 526

LOG OF TEST BORINGS NO. 7

NOTE: A COPY OF THIS LOG OF TEST BORINGS IS AVAILABLE AT OFFICE OF STRUCTURE MAINTENANCE AND INVESTIGATIONS, SACRAMENTO, CALIFORNIA

CU: 12
EA: 0F0311

BRIDGE No. 55E0084

Sheet 72 of 83

To accompany plans dated 12-14-09

REGISTERED PROFESSIONAL ENGINEER
LINO C. CHEANG
NO. GE 2345
EXP. 9/30/09
GEOTECHNICAL
STATE OF CALIFORNIA

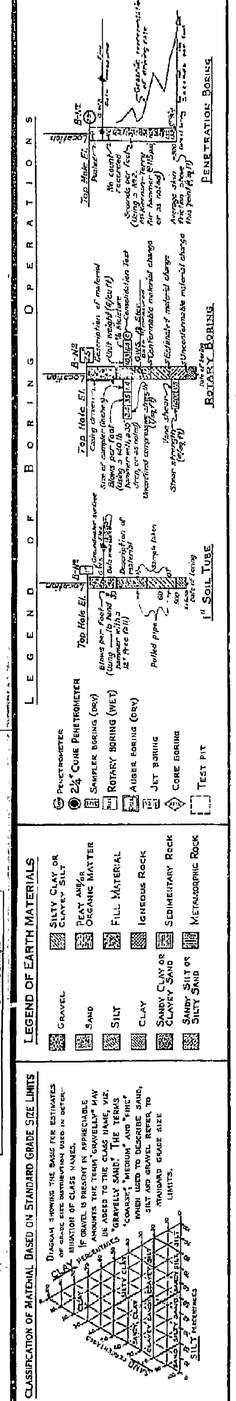

NOTE: Classification of earth material as shown on this sheet is based upon field inspection and is not to be construed to imply mechanical analysis.

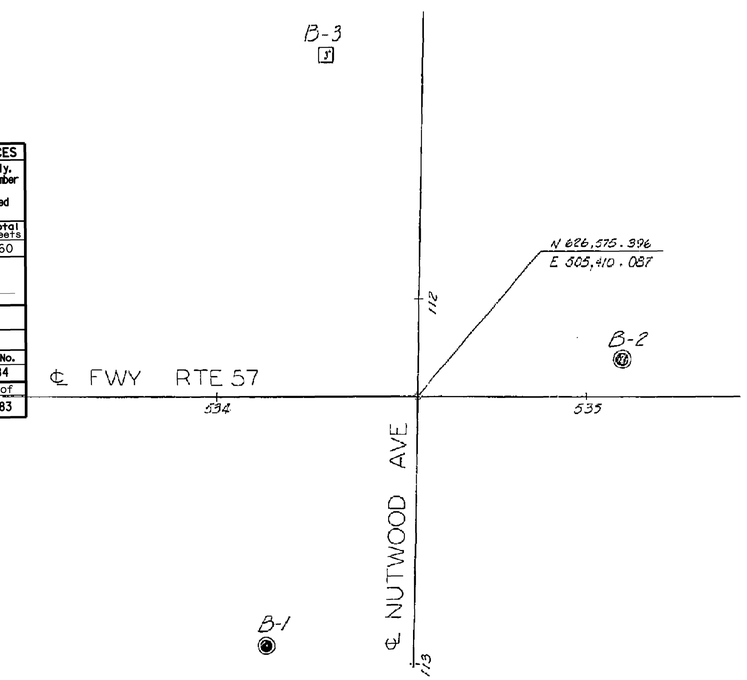

PLAN
Scale 1" = 20'

AS BUILT PLANS
Contract No. 07-032124
Date Completed
Document No. 70000668

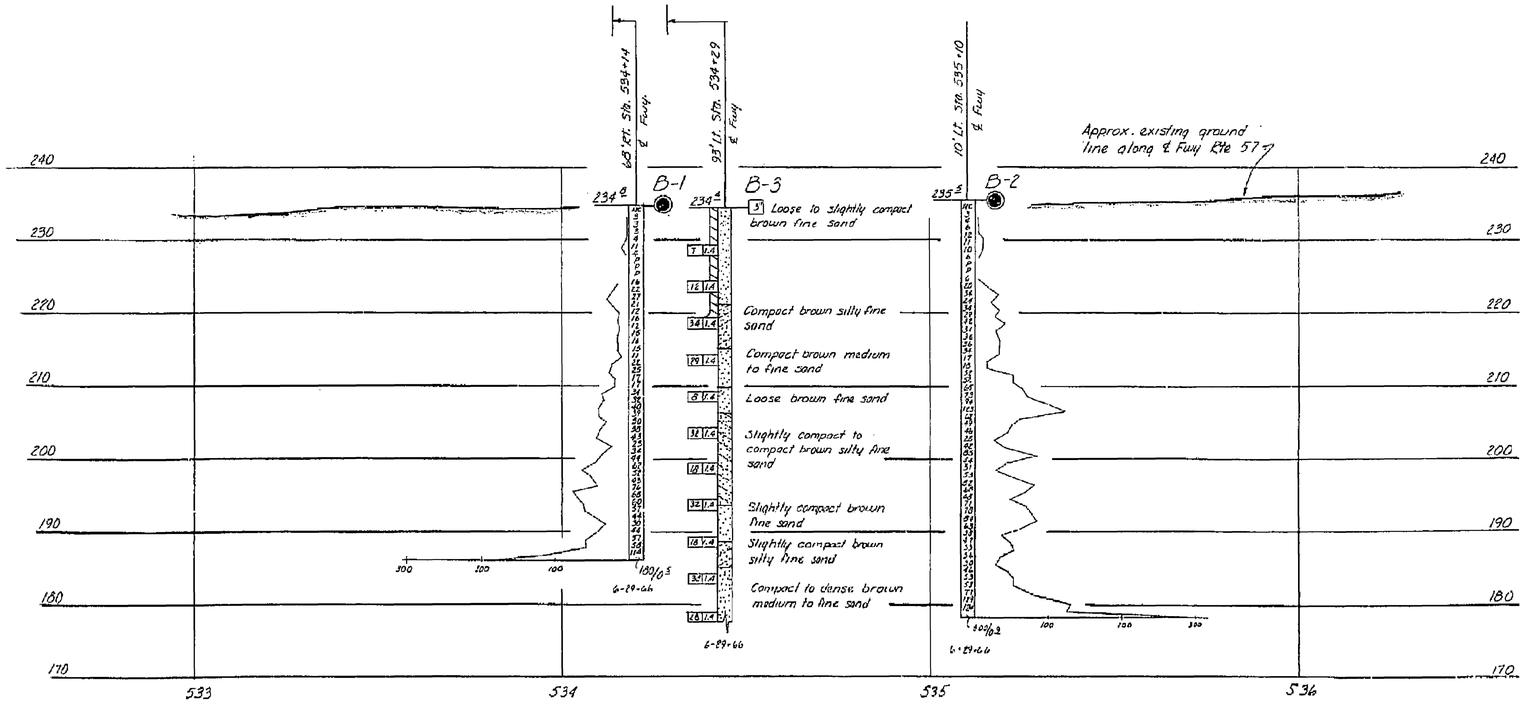

NO GROUND WATER ENCOUNTERED DURING THIS INVESTIGATION BY BRIDGE DEPT. GEOLOGY SECTION
DATE June 1966

AS BUILT
CORRECTIONS BY Hudson Glass 7-29-69
CONTRACT NO. 07-032124
DATE 9-30-69

PROFILE
Scale Vert. 1" = 10'
Horiz. 1" = 20'

SHEET	OF
12	12

STATE OF CALIFORNIA
DEPARTMENT OF PUBLIC WORKS
DIVISION OF HIGHWAYS

NUTWOOD AVENUE UNDERCROSSING

LOG OF TEST BORINGS

SCALE As Noted | BRIDGE 55-464 | FILE | DRAWING 55464-12

FIELD STUDY	By R. CORBETT 6-29-66
DRAWN	By M. ALBERED 7-31-66
CHECKED	By C. Bemis 7-29-66

Approval Recommended: Bridge Engineer

BRIDGE DEPARTMENT
ENGINEERING GEOLOGY SECTION

197

Charge 07208
W.A. 032131

Disregard prints bearing earlier numbers → PREL. DRAWING No. PR- 66/67

FILENAME => 55e-538-z-526-1tb07.tif

Dist	COUNTY	ROUTE	POST MILES TOTAL PROJECT	SHEET No.	TOTAL SHEETS
12	Ora	57	16.2/18.6	535	960

REGISTERED CIVIL ENGINEER — DATE 06/17/09

12-14-09
PLANS APPROVAL DATE

REGISTERED PROFESSIONAL ENGINEER — Chien-Tai Yang — No. C 66394 — Exp. 6-30-10 — CIVIL — STATE OF CALIFORNIA

THE STATE OF CALIFORNIA OR ITS OFFICERS OR AGENTS SHALL NOT BE RESPONSIBLE FOR THE ACCURACY OR COMPLETENESS OF SCANNED COPIES OF THIS PLAN SHEET.

ORANGE COUNTY TRANSPORTATION AUTHORITY
550 S. MAIN STREET
ORANGE, CA 92863-1584

EARTH MECHANICS, INC.
17660 NEWHOPE STREET, SUITE E
FOUNTAIN VALLEY, CA 92708

BENCHMARKS:

Vertical Datum NAVD 88

Designation: 1L-54-82 Elev = 153.171
Described by OCS 2002 - Found 3¾" OCS Aluminum Benchmark Disk Stamped "1L-54-82", set in the Top of a 6 in. by 6 in. Concrete Post. Monument is located along the Westerly Levee of the Santa Ana River, 0.25 Miles Northerly along Levee from the Centerline of Orangewood Avenue, 200 ft. Northeasterly of the Easterly Leg of the Anaheim Angels 200 ft. tall sign, 69 ft. Westerly of the Centerline of the Bike Trail and 1.5 ft. Westerly of a Steel OCS Witness Post. Monument is set 0.3 below the Ground.

Designation: 2G-25-70 Elev = 275.872
Described by OCS 2003 - Found 3¾" OCS Aluminum Benchmark Disk Stamped "2G-25-70", set in the Southeasterly Corner of a 4 ft by 6 ft Concrete Catch Basin. Monument is Located in the Northwesterly Corner of the Intersection of Yorba Linda Boulevard and Deerpark Drive, 75 ft Westerly of the Centerline of Deerpark and 46 ft Northerly of the Centerline of Yorba Linda. Monument is set Level with the Sidewalk.

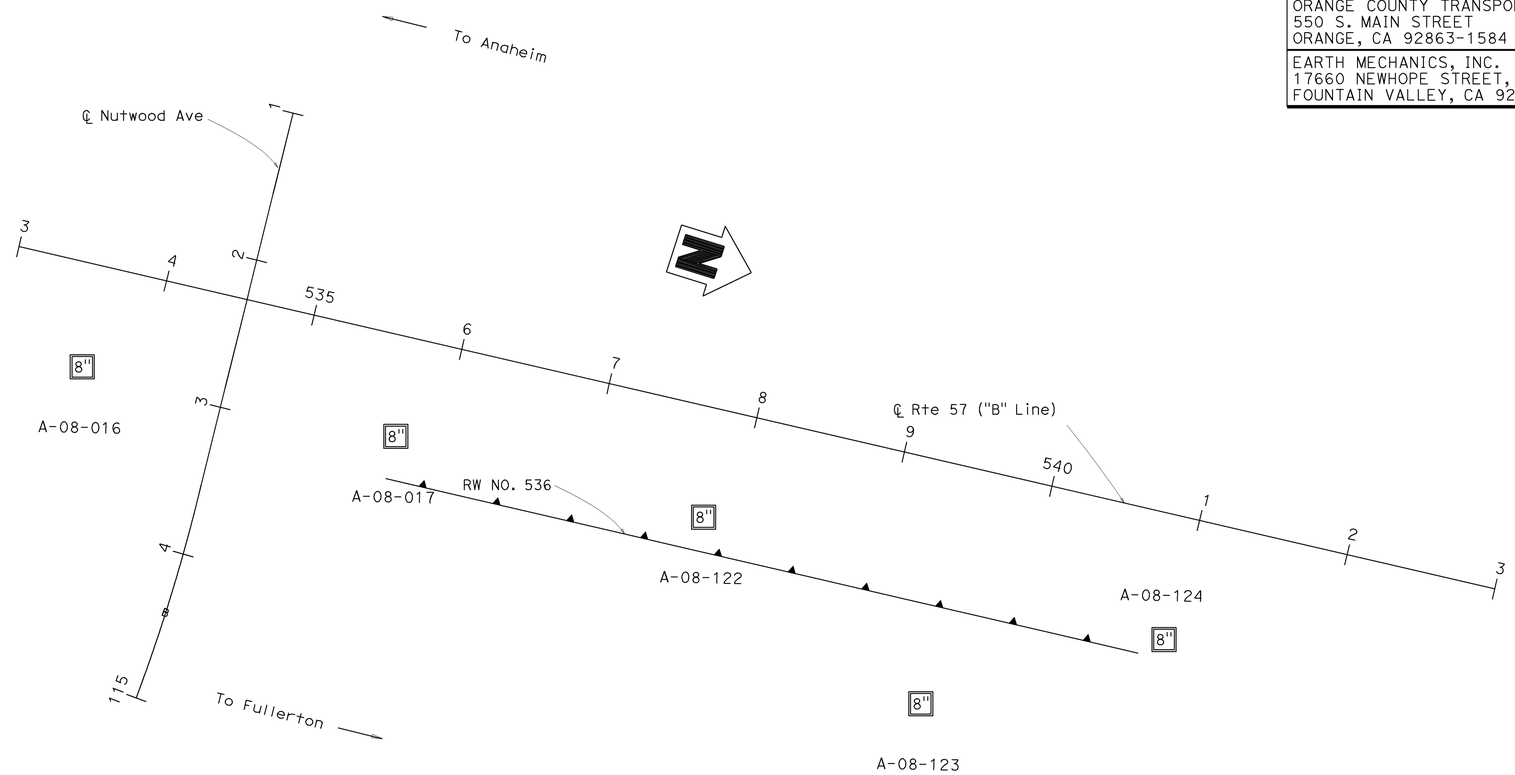

PLAN
1" = 50'

DESIGN OVERSIGHT — Jon Hamaguchi
6-24-09
SIGN OFF DATE

DRAWN BY: J.Fang
CHECKED BY: L.Cheang

FIELD INVESTIGATION BY:
R.Jie

PREPARED FOR THE STATE OF CALIFORNIA DEPARTMENT OF TRANSPORTATION

C. Yang
PROJECT ENGINEER

BRIDGE NO. 55E0085
POST MILES 16.2/18.6

RETAINING WALL NO. 536
LOG OF TEST BORINGS NO. 1

DESIGN GENERAL PLAN SHEET (ENGLISH) (REV. 2/25/05)

ORIGINAL SCALE IN INCHES FOR REDUCED PLANS 0 1 2 3

CU 12
EA 0F0311

DISREGARD PRINTS BEARING EARLIER REVISION DATES
REVISION DATES (PRELIMINARY STAGE ONLY) 4/30/09

SHEET 73 OF 83

FILE => 55e-538-z-536-1tb01.dgn

USERNAME => rfrene DATE PLOTTED => 17-DEC-2009 TIME PLOTTED => 10:08

Dist	COUNTY	ROUTE	POST MILES TOTAL PROJECT	SHEET No.	TOTAL SHEETS
12	Ora	57	16.2/18.6	536	960

REGISTERED CIVIL ENGINEER 06/17/09 DATE

12-14-09
PLANS APPROVAL DATE

REGISTERED PROFESSIONAL ENGINEER Chien-Tai Yang No. C 66394 Exp. 6-30-10 CIVIL STATE OF CALIFORNIA

THE STATE OF CALIFORNIA OR ITS OFFICERS OR AGENTS SHALL NOT BE RESPONSIBLE FOR THE ACCURACY OR COMPLETENESS OF SCANNED COPIES OF THIS PLAN SHEET.

ORANGE COUNTY TRANSPORTATION AUTHORITY
550 S. MAIN STREET
ORANGE, CA 92863-1584

EARTH MECHANICS, INC.
17660 NEWHOPE STREET, SUITE E
FOUNTAIN VALLEY, CA 92708

FOR PLAN VIEW SEE "RETAINING WALL NO. 536, LOG OF TEST BORINGS NO. 1"

NOTES:

(1) This LOTB sheet was prepared in accordance with the Caltrans Soil and Rock Logging, Classification and Presentation Manual (June 2007)
(2) 2.4" samples were taken using a California Modified Sampler.
(3) An automatic trip hammer system consisting of a hammer weight of 140 lbs falling a distance of 30" was used to advance the drive sampler.
(4) Conversion factor from 2.4" Modified California Ring Sampler blowcounts to Standard Penetration Test (SPT) blowcounts is 0.5.

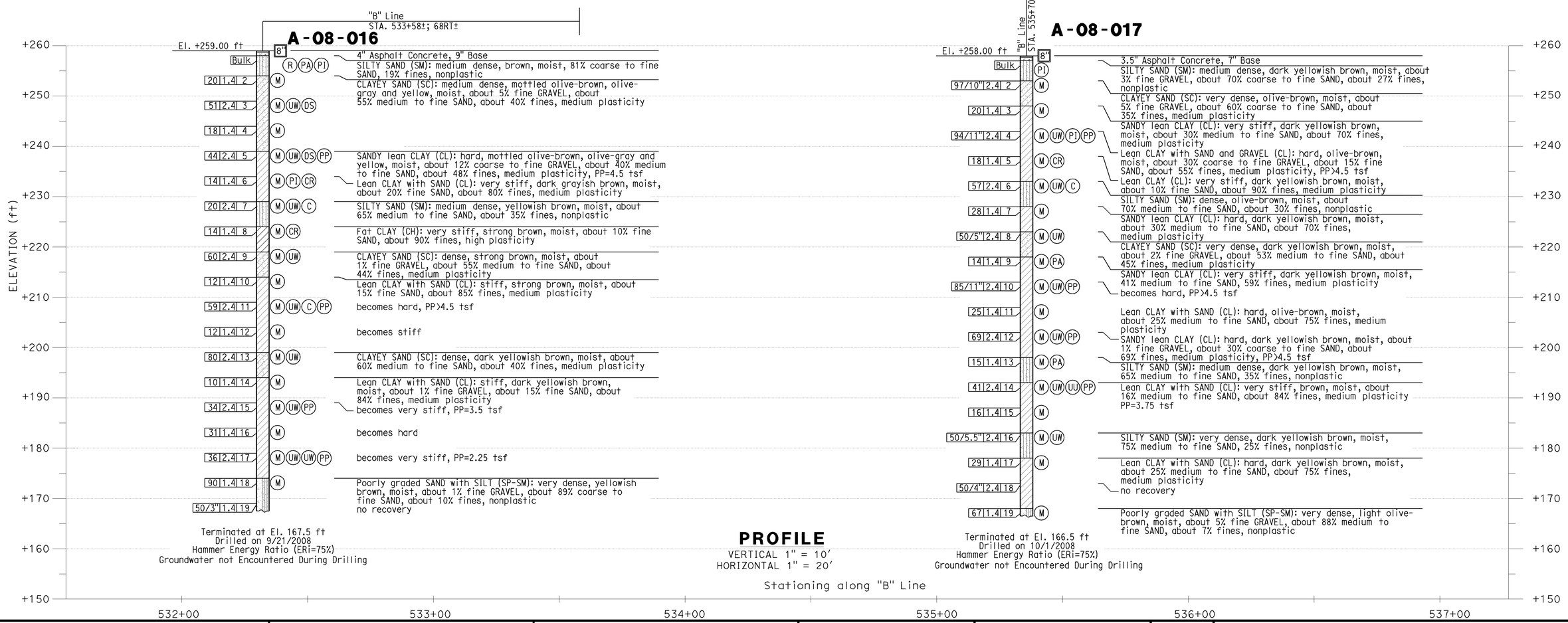

Jon Hamaguchi DESIGN OVERSIGHT 6-24-09 SIGN OFF DATE	DRAWN BY: J.Fang CHECKED BY: L.Cheang	FIELD INVESTIGATION BY: R.Jie	PREPARED FOR THE STATE OF CALIFORNIA DEPARTMENT OF TRANSPORTATION	C.Yang PROJECT ENGINEER	BRIDGE NO. 55E0085 POST MILES 16.2/18.6	RETAINING WALL NO. 536 LOG OF TEST BORINGS NO. 2

DESIGN GENERAL PLAN SHEET (ENGLISH) (REV. 2/25/05)

ORIGINAL SCALE IN INCHES FOR REDUCED PLANS 0 1 2 3

CU 12
EA 0F0311

DISREGARD PRINTS BEARING EARLIER REVISION DATES

REVISION DATES (PRELIMINARY STAGE ONLY): 4/30/09

SHEET 74 OF 83

FILE => 55e-538-z-536-ltb02.dgn

USERNAME => trrene DATE PLOTTED => 17-DEC-2009 TIME PLOTTED => 10:08

Dist	COUNTY	ROUTE	POST MILES TOTAL PROJECT	SHEET No.	TOTAL SHEETS
12	Ora	57	16.2/18.6	537	960

REGISTERED CIVIL ENGINEER — DATE 06/17/09

12-14-09
PLANS APPROVAL DATE

REGISTERED PROFESSIONAL ENGINEER — Chien-Tai Yang — No. C 66394 — Exp. 6-30-10 — CIVIL — STATE OF CALIFORNIA

THE STATE OF CALIFORNIA OR ITS OFFICERS OR AGENTS SHALL NOT BE RESPONSIBLE FOR THE ACCURACY OR COMPLETENESS OF SCANNED COPIES OF THIS PLAN SHEET.

ORANGE COUNTY TRANSPORTATION AUTHORITY
550 S. MAIN STREET
ORANGE, CA 92863-1584

EARTH MECHANICS, INC.
17660 NEWHOPE STREET, SUITE E
FOUNTAIN VALLEY, CA 92708

FOR PLAN VIEW SEE "RETAINING WALL NO. 536, LOG OF TEST BORINGS NO. 1"

NOTES:

(1) This LOTB sheet was prepared in accordance with the Caltrans Soil and Rock Logging, Classification and Presentation Manual (June 2007)
(2) 2.4" samples were taken using a California Modified Sampler.
(3) An automatic trip hammer system consisting of a hammer weight of 140 lbs falling a distance of 30" was used to advance the drive sampler.
(4) Conversion factor from 2.4" Modified California Ring Sampler blowcounts to Standard Penetration Test (SPT) blowcounts is 0.5.

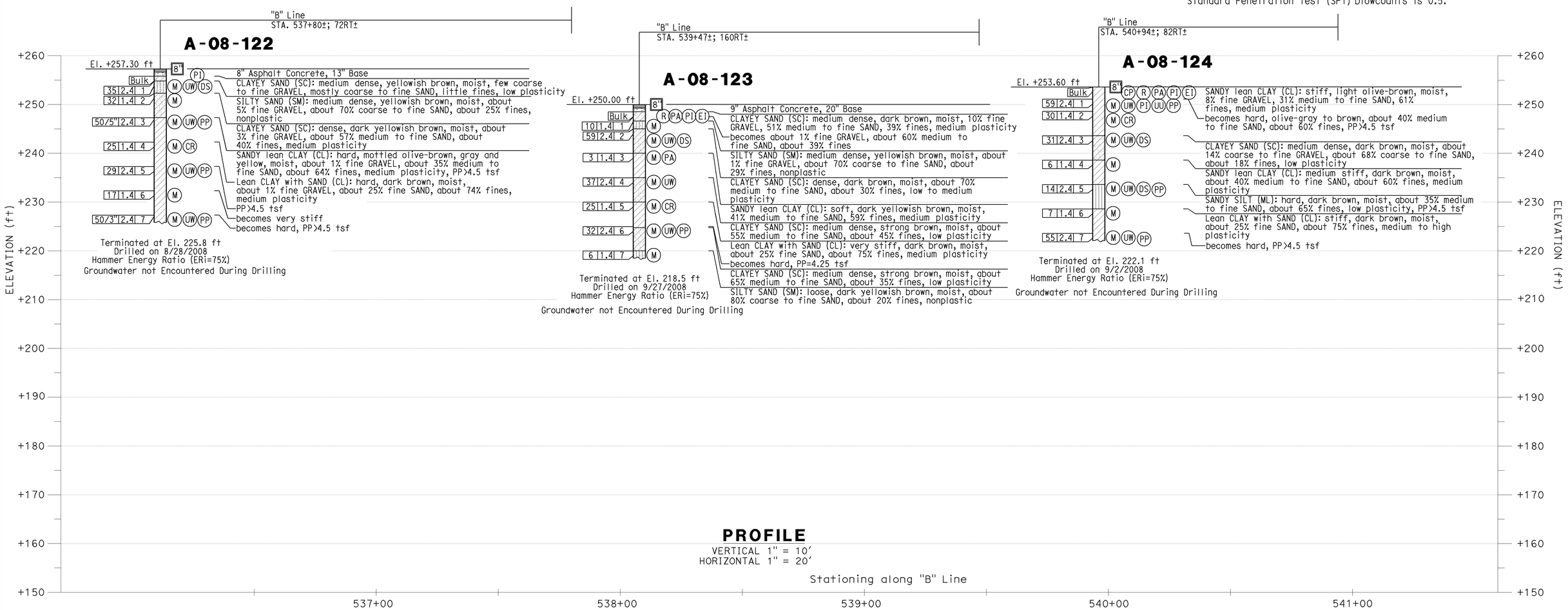

DESIGN OVERSIGHT Jon Hamaguchi — 6-24-09 SIGN OFF DATE	DRAWN BY: J.Fang CHECKED BY: L.Cheang	FIELD INVESTIGATION BY: R.Jie	PREPARED FOR THE STATE OF CALIFORNIA DEPARTMENT OF TRANSPORTATION	C.Yang PROJECT ENGINEER	BRIDGE NO. 55E0085 POST MILES 16.2/18.6	RETAINING WALL NO. 536 LOG OF TEST BORINGS NO. 3

DESIGN GENERAL PLAN SHEET (ENGLISH) (REV. 2/25/05)

ORIGINAL SCALE IN INCHES FOR REDUCED PLANS 0 1 2 3

CU 12
EA 0F0311

DISREGARD PRINTS BEARING EARLIER REVISION DATES 4/30/09

REVISION DATES (PRELIMINARY STAGE ONLY)

SHEET 75 OF 83

FILE => 55e-538-z-536-ltb03.dgn

USERNAME => rtrene DATE PLOTTED => 17-DEC-2009 TIME PLOTTED => 10:08

Dist	COUNTY	ROUTE	POST MILES TOTAL PROJECT	SHEET No.	TOTAL SHEETS
12	Ora	57	16.2/18.6	538	960

REGISTERED CIVIL ENGINEER — DATE 06/17/09

12-14-09
PLANS APPROVAL DATE

REGISTERED PROFESSIONAL ENGINEER — Chien-Tai Yang — No. C 66394 — Exp. 6-30-10 — CIVIL — STATE OF CALIFORNIA

THE STATE OF CALIFORNIA OR ITS OFFICERS OR AGENTS SHALL NOT BE RESPONSIBLE FOR THE ACCURACY OR COMPLETENESS OF SCANNED COPIES OF THIS PLAN SHEET.

ORANGE COUNTY TRANSPORTATION AUTHORITY
550 S. MAIN STREET
ORANGE, CA 92863-1584

EARTH MECHANICS, INC.
17660 NEWHOPE STREET, SUITE E
FOUNTAIN VALLEY, CA 92708

REFERENCE: CALTRANS SOIL & ROCK LOGGING, CLASSIFICATION, AND PRESENTATION MANUAL (JUNE 2007)

CEMENTATION

Description	Criteria
Weak	Crumbles or breaks with handling or little finger pressure.
Moderate	Crumbles or breaks with considerable finger pressure.
Strong	Will not crumble or break with finger pressure.

CONSISTENCY OF COHESIVE SOILS

Description	Unconfined Compressive Strength (tsf)	Pocket Penetrometer Measurement (tsf)	Torvane Measurement (tsf)	Field Approximation
Very Soft	< 0.25	< 0.25	< 0.12	Easily penetrated several inches by fist
Soft	0.25 to 0.50	0.25 to 0.50	0.12 to 0.25	Easily penetrated several inches by thumb
Medium Stiff	0.50 to 1.0	0.50 to 1.0	0.25 to 0.50	Penetrated several inches by thumb with moderate effort
Stiff	1 to 2	1 to 2	0.50 to 1.0	Readily indented by thumb but penetrated only with great effort
Very Stiff	2 to 4	2 to 4	1.0 to 2.0	Readily indented by thumbnail
Hard	> 4.0	> 4.0	> 2.0	Indented by thumbnail with difficulty

BOREHOLE IDENTIFICATION

Symbol	Hole Type	Description
Size	A	Auger Boring
Size	R P	Rotary drilled boring Rotary percussion boring (air)
Size	R	Rotary drilled diamond core
Size	HD HA	Hand driven (1-inch soil tube) Hand Auger
●	D	Dynamic Cone Penetration Boring
▲	CPT	Cone Penetration Test (ASTM D 5778-95)
⬚	O	Other

Note: Size in inches.

PLASTICITY OF FINE-GRAINED SOILS

Description	Criteria
Nonplastic	A 1/8-inch thread cannot be rolled at any water content.
Low	The thread can barely be rolled and the lump cannot be formed when drier than the plastic limit.
Medium	The thread is easy to roll and not much time is required to reach the plastic limit. The thread cannot be rerolled after reaching the plastic limit. The lump crumbles when drier than the plastic limit.
High	It takes considerable time rolling and kneading to reach the plastic limit. The thread can be rerolled several times after reaching the plastic limit. The lump can be formed without crumbling when drier than the plastic limit.

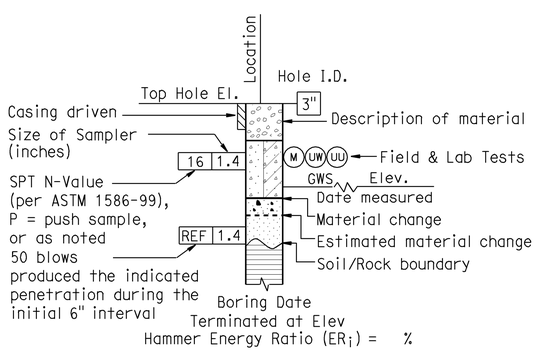

ROTARY BORING

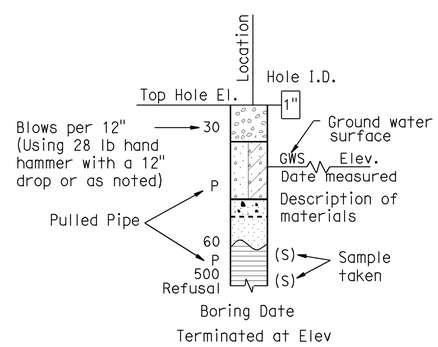

HAND BORING

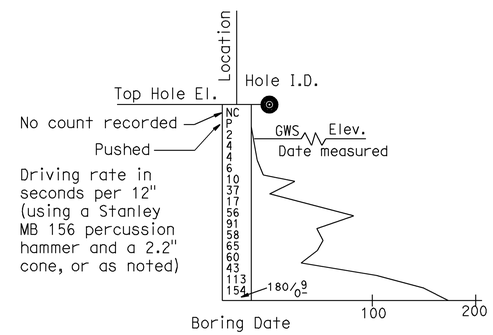

DYNAMIC CONE PENETRATION BORING

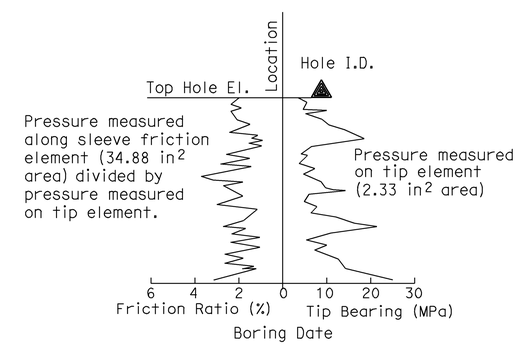

CONE PENETRATION TEST (CPT) SOUNDING

DESIGN OVERSIGHT — Jon Hamaguchi
6-24-09
SIGN OFF DATE

DRAWN BY: J.Fang
CHECKED BY: L.Cheang

FIELD INVESTIGATION BY:
R.Jie

PREPARED FOR THE STATE OF CALIFORNIA DEPARTMENT OF TRANSPORTATION

C.Yang
PROJECT ENGINEER

BRIDGE NO. 55E0085
POST MILES 16.2/18.6

RETAINING WALL NO. 536
LOG OF TEST BORINGS NO. 4

DESIGN GENERAL PLAN SHEET (ENGLISH) (REV. 2/25/05)

ORIGINAL SCALE IN INCHES FOR REDUCED PLANS 0 1 2 3

CU 12
EA 0F0311

DISREGARD PRINTS BEARING EARLIER REVISION DATES

REVISION DATES (PRELIMINARY STAGE ONLY)

SHEET 76 OF 83

FILE => 55e-538-z-536-ltb04.dgn

USERNAME => trrene DATE PLOTTED => 17-DEC-2009 TIME PLOTTED => 10:08

REFERENCE: CALTRANS SOIL & ROCK LOGGING, CLASSIFICATION, AND PRESENTATION MANUAL (JUNE 2007)

GROUP SYMBOLS AND NAMES

Graphic/Symbol	Group Names
GW	Well-graded GRAVEL Well-graded GRAVEL with SAND
GP	Poorly graded GRAVEL Poorly graded GRAVEL with SAND
GW-GM	Well-graded GRAVEL with SILT Well-graded GRAVEL with SILT and SAND
GW-GC	Well-graded GRAVEL with CLAY (or SILTY CLAY) Well-graded GRAVEL with CLAY and SAND (or SILTY CLAY and SAND)
GP-GM	Poorly graded GRAVEL with SILT Poorly graded GRAVEL with SILT and SAND
GP-GC	Poorly graded GRAVEL with CLAY (or SILTY CLAY) Poorly graded GRAVEL with CLAY and SAND (or SILTY CLAY and SAND)
GM	SILTY GRAVEL SILTY GRAVEL with SAND
GC	CLAYEY GRAVEL CLAYEY GRAVEL with SAND
GC-GM	SILTY, CLAYEY GRAVEL SILTY, CLAYEY GRAVEL with SAND
SW	Well-graded SAND Well-graded SAND with GRAVEL
SP	Poorly graded SAND Poorly graded SAND with GRAVEL
SW-SM	Well-graded SAND with SILT Well-graded SAND with SILT and GRAVEL
SW-SC	Well-graded SAND with CLAY (or SILTY CLAY) Well-graded SAND with CLAY and GRAVEL (or SILTY CLAY and GRAVEL)
SP-SM	Poorly graded SAND with SILT Poorly graded SAND with SILT and GRAVEL
SP-SC	Poorly graded SAND with CLAY (or SILTY CLAY) Poorly graded SAND with CLAY and GRAVEL (or SILTY CLAY and GRAVEL)
SM	SILTY SAND SILTY SAND with GRAVEL
SC	CLAYEY SAND CLAYEY SAND with GRAVEL
SC-SM	SILTY, CLAYEY SAND SILTY, CLAYEY SAND with GRAVEL
PT	PEAT
	COBBLES COBBLES and BOULDERS BOULDERS

Graphic/Symbol	Group Names
CL	Lean CLAY Lean CLAY with SAND Lean CLAY with GRAVEL SANDY lean CLAY SANDY lean CLAY with GRAVEL GRAVELLY lean CLAY GRAVELLY lean CLAY with SAND
CL-ML	SILTY CLAY SILTY CLAY with SAND SILTY CLAY with GRAVEL SANDY SILTY CLAY SANDY SILTY CLAY with GRAVEL GRAVELLY SILTY CLAY GRAVELLY SILTY CLAY with SAND
ML	SILT SILT with SAND SILT with GRAVEL SANDY SILT SANDY SILT with GRAVEL GRAVELLY SILT GRAVELLY SILT with SAND
OL	ORGANIC lean CLAY ORGANIC lean CLAY with SAND ORGANIC lean CLAY with GRAVEL SANDY ORGANIC lean CLAY SANDY ORGANIC lean CLAY with GRAVEL GRAVELLY ORGANIC lean CLAY GRAVELLY ORGANIC lean CLAY with SAND
OL	ORGANIC SILT ORGANIC SILT with SAND ORGANIC SILT with GRAVEL SANDY ORGANIC SILT SANDY ORGANIC SILT with GRAVEL GRAVELLY ORGANIC SILT GRAVELLY ORGANIC SILT with SAND
CH	Fat CLAY Fat CLAY with SAND Fat CLAY with GRAVEL SANDY fat CLAY SANDY fat CLAY with GRAVEL GRAVELLY fat CLAY GRAVELLY fat CLAY with SAND
MH	Elastic SILT Elastic SILT with SAND Elastic SILT with GRAVEL SANDY elastic SILT SANDY elastic SILT with GRAVEL GRAVELLY elastic SILT GRAVELLY elastic SILT with SAND
OH	ORGANIC fat CLAY ORGANIC fat CLAY with SAND ORGANIC fat CLAY with GRAVEL SANDY ORGANIC fat CLAY SANDY ORGANIC fat CLAY with GRAVEL GRAVELLY ORGANIC fat CLAY GRAVELLY ORGANIC fat CLAY with SAND
OH	ORGANIC elastic SILT ORGANIC elastic SILT with SAND ORGANIC elastic SILT with GRAVEL SANDY ORGANIC elastic SILT SANDY ORGANIC elastic SILT with GRAVEL GRAVELLY ORGANIC elastic SILT GRAVELLY ORGANIC elastic SILT with SAND
OL/OH	ORGANIC SOIL ORGANIC SOIL with SAND ORGANIC SOIL with GRAVEL SANDY ORGANIC SOIL SANDY ORGANIC SOIL with GRAVEL GRAVELLY ORGANIC SOIL GRAVELLY ORGANIC SOIL with SAND

FIELD AND LABORATORY TESTING

- (C) Consolidation (ASTM D 2435)
- (CL) Collapse Potential (ASTM D 5333)
- (CP) Compaction Curve (CTM 216)
- (CR) Corrosivity Testing (CTM 643, CTM 422, CTM 417)
- (CU) Consolidated Undrained Triaxial (ASTM D 4767)
- (DS) Direct Shear (ASTM D 3080)
- (EI) Expansion Index (ASTM D 4829)
- (M) Moisture Content (ASTM D 2216)
- (OC) Organic Content-% (ASTM D 2974)
- (P) Permeability (CTM 220)
- (PA) Particle Size Analysis (ASTM D 422)
- (PI) Plasticity Index (AASHTO T 90) Liquid Limit (AASHTO T 89)
- (PL) Point Load Index (ASTM D 5731)
- (PM) Pressure Meter
- (PP) Pocket Penetrometer
- (R) R-Value (CTM 301)
- (SE) Sand Equivalent (CTM 217)
- (SG) Specific Gravity (AASHTO T 100)
- (SL) Shrinkage Limit (ASTM D 427)
- (SW) Swell Potential (ASTM D 4546)
- (TV) Pocket Torvane
- (UC) Unconfined Compression-Soil (ASTM D 2166) Unconfined Compression-Rock (ASTM D 2938)
- (UU) Unconsolidated Undrained Triaxial (ASTM D 2850)
- (UW) Unit Weight (ASTM D 4767)
- (VS) Vane Shear (AASHTO T 223)

Dist	COUNTY	ROUTE	POST MILES TOTAL PROJECT	SHEET No.	TOTAL SHEETS
12	Ora	57	16.2/18.6	539	960

REGISTERED CIVIL ENGINEER — DATE 06/17/09

12-14-09
PLANS APPROVAL DATE

REGISTERED PROFESSIONAL ENGINEER — Chien-Tai Yang — No. C 66394 — Exp. 6-30-10 — CIVIL — STATE OF CALIFORNIA

THE STATE OF CALIFORNIA OR ITS OFFICERS OR AGENTS SHALL NOT BE RESPONSIBLE FOR THE ACCURACY OR COMPLETENESS OF SCANNED COPIES OF THIS PLAN SHEET.

ORANGE COUNTY TRANSPORTATION AUTHORITY
550 S. MAIN STREET
ORANGE, CA 92863-1584

EARTH MECHANICS, INC.
17660 NEWHOPE STREET, SUITE E
FOUNTAIN VALLEY, CA 92708

APPARENT DENSITY OF COHESIONLESS SOILS

Description	SPT N_{60} (Blows / 12 inches)
Very loose	0 - 4
Loose	5 - 10
Medium Dense	11 - 30
Dense	31 - 50
Very Dense	> 50

MOISTURE

Description	Criteria
Dry	Absence of moisture, dusty, dry to the touch
Moist	Damp but no visible water
Wet	Visible free water, usually soil is below water table

PERCENT OR PROPORTION OF SOILS

Description	Criteria
Trace	Particles are present but estimated to be less than 5%
Few	5 to 10%
Little	15 to 25%
Some	30 to 45%
Mostly	50 to 100%

PARTICLE SIZE

Description		Size
Boulder		> 12"
Cobble		3" to 12"
Gravel	Coarse	3/4" to 3"
	Fine	No. 4 to 3/4"
Sand	Coarse	No. 10 to No. 4
	Medium	No. 40 to No. 10
	Fine	No. 200 to No. 40

DESIGN OVERSIGHT — Jon Hamaguchi
6-24-09
SIGN OFF DATE

DRAWN BY: J.Fang
CHECKED BY: L.Cheang

FIELD INVESTIGATION BY:
R.Jie

PREPARED FOR THE STATE OF CALIFORNIA DEPARTMENT OF TRANSPORTATION

C.Yang
PROJECT ENGINEER

BRIDGE NO. 55E0085
POST MILES 16.2/18.6

RETAINING WALL NO. 536
LOG OF TEST BORINGS NO. 5

DESIGN GENERAL PLAN SHEET (ENGLISH) (REV. 2/25/05)

ORIGINAL SCALE IN INCHES FOR REDUCED PLANS 0 1 2 3

CU 12
EA 0F0311

DISREGARD PRINTS BEARING EARLIER REVISION DATES

REVISION DATES (PRELIMINARY STAGE ONLY)

SHEET 77 OF 83

FILE => 55e-538-z-536-ltb05.dgn

USERNAME => trrene DATE PLOTTED => 17-DEC-2009 TIME PLOTTED => 10:08

FED. ROAD DIST. NO.	STATE	F. A. PROJECT NO.	SHEET NO.	TOTAL SHEETS
7	CALIF.			

DIST.	COUNTY	ROUTE	SECTION	SHEET NO.	TOTAL SHEETS
07	ORA	57	15.4/21.8	197	197

DATE APPROVED: August 28, 1967

BENCH MARK
BM "519R-65" Elev 217.59
Set R/S in N. curb of Chapman Ave.
@ E.C.R. from Placentia Ave 48' W. of
Placentia & 31' N. of ℄ Chapman

DIVISION OF ENGINEERING SERVICES - GEOTECHNICAL SERVICES

As-Built Log of Test Borings sheet is considered an informational document only. As such, the State of California registration seal with signature, license number and registration certificate expiration date confirm that this is a true and accurate copy of the original document. This drawing is available and presented only for the convenience of any bidder, contractor or other interested party.

DIST.	COUNTY	ROUTE	POST MILES - TOTAL PROJECT	Sheet No.	Total sheets
12	Ora	57	16.2/18.6	540	960

Lino Cheang — REGISTERED CIVIL ENGINEER — 06/17/09 DATE

RETAINING WALL NO. 536

LOG OF TEST BORINGS NO. 6

NOTE: A COPY OF THIS LOG OF TEST BORINGS IS AVAILABLE AT OFFICE OF STRUCTURE MAINTENANCE AND INVESTIGATIONS, SACRAMENTO, CALIFORNIA

CU: 12
EA: 0F0311

BRIDGE No. 55E0085

Sheet 78 of 83

To accompany plans dated 12-14-09

REGISTERED PROFESSIONAL ENGINEER — LINO C. CHEANG — NO. GE 2345 — EXP. 9/30/09 — GEOTECHNICAL — STATE OF CALIFORNIA

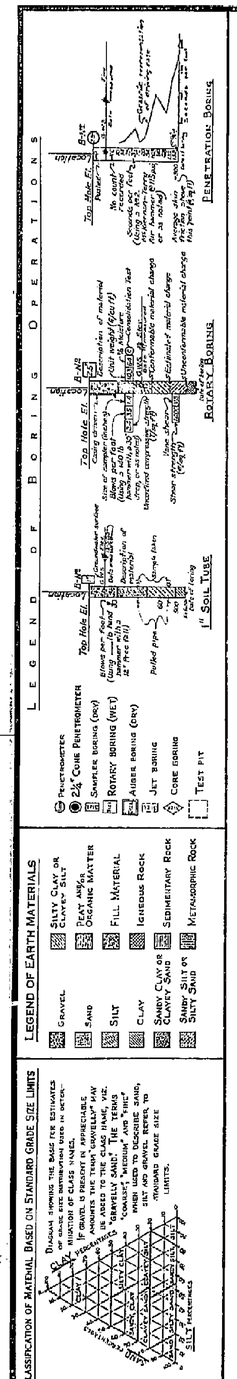

NOTE: Classification of earth material as shown on this sheet is based upon field inspection and is not to be construed to imply mechanical analysis.

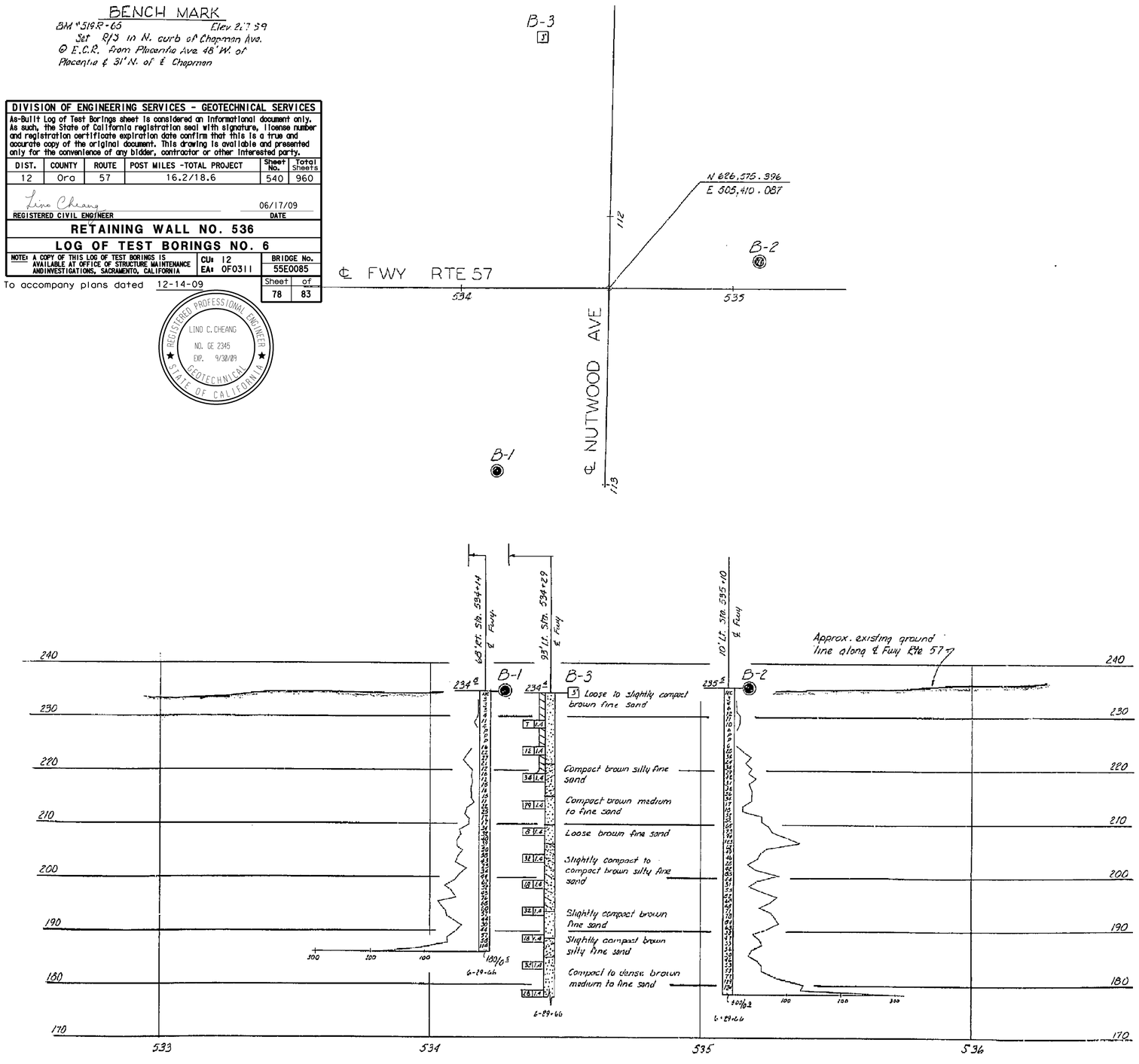

PLAN
Scale 1" = 20'

AS BUILT PLANS
Contract No. 07-032124
Date Completed
Document No. 70000668

NO GROUND WATER ENCOUNTERED DURING THIS INVESTIGATION BY BRIDGE DEPT. GEOLOGY SECTION
DATE June 1966

AS BUILT
CORRECTIONS BY: [illegible] 7-29-69
CONTRACT NO. 07-032124
DATE 9-30-69

PROFILE
Scale Vert. 1" = 10'
Horiz. 1" = 20'

SHEET	OF
12	12

STATE OF CALIFORNIA
DEPARTMENT OF PUBLIC WORKS
DIVISION OF HIGHWAYS

NUTWOOD AVENUE UNDERCROSSING

LOG OF TEST BORINGS

SCALE As Noted | BRIDGE 55-464 | FILE | DRAWING 55464-12

FIELD STUDY by: R. CORCHALET 6-29-66
DRAWN by: M. ALZEBED 7-27-66
CHECKED by: S. Davis 8-29-66
Approved Recommended: Richard F. Allen, Engineering Geologist

BRIDGE DEPARTMENT
ENGINEERING GEOLOGY SECTION

197

Charge 07208
W. A. 032131

Disregard prints bearing earlier numbers → PREL. DRAWING No. PR- 66/67

FILENAME => 55e-538-z-536-1tb06.tif

Dist	COUNTY	ROUTE	POST MILES TOTAL PROJECT	SHEET No.	TOTAL SHEETS
12	Ora	57	16.2/18.6	541	960

REGISTERED CIVIL ENGINEER 06/17/09 DATE

12-14-09
PLANS APPROVAL DATE

REGISTERED PROFESSIONAL ENGINEER Chien-Tai Yang No. C 66394 Exp. 6-30-10 CIVIL STATE OF CALIFORNIA

THE STATE OF CALIFORNIA OR ITS OFFICERS OR AGENTS SHALL NOT BE RESPONSIBLE FOR THE ACCURACY OR COMPLETENESS OF SCANNED COPIES OF THIS PLAN SHEET.

ORANGE COUNTY TRANSPORTATION AUTHORITY
550 S. MAIN STREET
ORANGE, CA 92863-1584

EARTH MECHANICS, INC.
17660 NEWHOPE STREET, SUITE E
FOUNTAIN VALLEY, CA 92708

BENCHMARKS:

Vertical Datum NAVD 88

Designation: 1L-54-82 Elev = 153.171
Described by OCS 2002 - Found 3¾" OCS Aluminum Benchmark Disk Stamped "1L-54-82", set in the Top of a 6 in. by 6 in. Concrete Post. Monument is located along the Westerly Levee of the Santa Ana River, 0.25 Miles Northerly along Levee from the Centerline of Orangewood Avenue, 200 ft. Northeasterly of the Easterly Leg of the Anaheim Angels 200 ft. tall sign, 69 ft. Westerly of the Centerline of the Bike Trail and 1.5 ft. Westerly of a Steel OCS Witness Post. Monument is set 0.3 below the Ground.

Designation: 2G-25-70 Elev = 275.872
Described by OCS 2003 - Found 3¾" OCS Aluminum Benchmark Disk Stamped "2G-25-70", set in the Southeasterly Corner of a 4 ft by 6 ft Concrete Catch Basin. Monument is Located in the Northwesterly Corner of the Intersection of Yorba Linda Boulevard and Deerpark Drive, 75 ft Westerly of the Centerline of Deerpark and 46 ft Northerly of the Centerline of Yorba Linda. Monument is set Level with the Sidewalk.

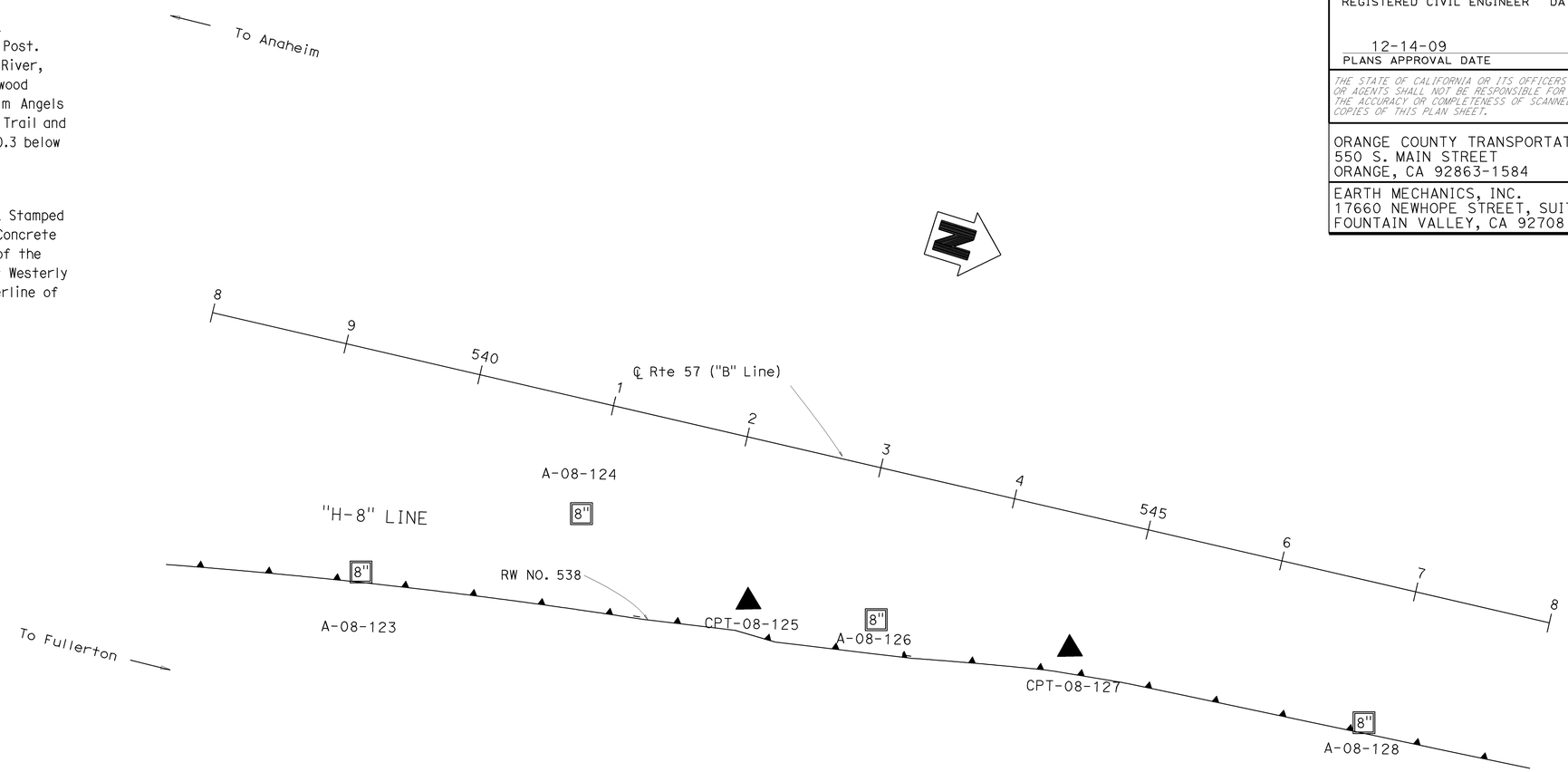

PLAN
1" = 50'

DESIGN OVERSIGHT Jon Hanaguchi
6-24-09
SIGN OFF DATE

DRAWN BY: J.Fang
CHECKED BY: L.Cheang

FIELD INVESTIGATION BY:
R.Jie

PREPARED FOR THE STATE OF CALIFORNIA DEPARTMENT OF TRANSPORTATION

C. Yang
PROJECT ENGINEER

BRIDGE NO. 55E0086
POST MILES 16.2/18.6

RETAINING WALL NO. 538
LOG OF TEST BORINGS NO. 1

DESIGN GENERAL PLAN SHEET (ENGLISH) (REV. 2/25/05)

ORIGINAL SCALE IN INCHES FOR REDUCED PLANS 0 1 2 3

CU 12
EA 0F0311

DISREGARD PRINTS BEARING EARLIER REVISION DATES

REVISION DATES (PRELIMINARY STAGE ONLY) 4/30/09

SHEET 79 OF 83

FILE => 55e-538-z-538-ltb01.dgn

USERNAME => ttrene DATE PLOTTED => 17-DEC-2009 TIME PLOTTED => 10:08

Dist	COUNTY	ROUTE	POST MILES TOTAL PROJECT	SHEET No.	TOTAL SHEETS
12	Ora	57	16.2/18.6	542	960

REGISTERED CIVIL ENGINEER — DATE 06/17/09

12-14-09
PLANS APPROVAL DATE

REGISTERED PROFESSIONAL ENGINEER — Chien-Tai Yang — No. C 66394 — Exp. 6-30-10 — CIVIL — STATE OF CALIFORNIA

THE STATE OF CALIFORNIA OR ITS OFFICERS OR AGENTS SHALL NOT BE RESPONSIBLE FOR THE ACCURACY OR COMPLETENESS OF SCANNED COPIES OF THIS PLAN SHEET.

ORANGE COUNTY TRANSPORTATION AUTHORITY
550 S. MAIN STREET
ORANGE, CA 92863-1584

EARTH MECHANICS, INC.
17660 NEWHOPE STREET, SUITE E
FOUNTAIN VALLEY, CA 92708

FOR PLAN VIEW SEE "RETAINING WALL NO. 538, LOG OF TEST BORINGS NO. 1"

NOTES:

(1) This LOTB sheet was prepared in accordance with the Caltrans Soil and Rock Logging, Classification and Presentation Manual (June 2007)
(2) 2.4" samples were taken using a California Modified Sampler.
(3) An automatic trip hammer system consisting of a hammer weight of 140 lbs falling a distance of 30" was used to advance the drive sampler.
(4) Conversion factor from 2.4" Modified California Ring Sampler blowcounts to Standard Penetration Test (SPT) blowcounts is 0.5.

PROFILE
VERTICAL 1" = 10'
HORIZONTAL 1" = 20'

DESIGN OVERSIGHT Jon Hamaguchi — 6-24-09 SIGN OFF DATE	DRAWN BY: J.Fang CHECKED BY: L.Cheang	FIELD INVESTIGATION BY: R.Jie	PREPARED FOR THE STATE OF CALIFORNIA DEPARTMENT OF TRANSPORTATION	C.Yang PROJECT ENGINEER	BRIDGE NO. 55E0086 POST MILES 16.2/18.6	RETAINING WALL NO. 538 LOG OF TEST BORINGS NO. 2

DESIGN GENERAL PLAN SHEET (ENGLISH) (REV. 2/25/05)

ORIGINAL SCALE IN INCHES FOR REDUCED PLANS 0 1 2 3

CU 12
EA 0F0311

DISREGARD PRINTS BEARING EARLIER REVISION DATES → 4/30/09

REVISION DATES (PRELIMINARY STAGE ONLY)

SHEET 80 OF 83

FILE => 55e-538-z-538-ltb02.dgn

USERNAME => trrene DATE PLOTTED => 17-DEC-2009 TIME PLOTTED => 10:08

Dist	COUNTY	ROUTE	POST MILES TOTAL PROJECT	SHEET No.	TOTAL SHEETS
12	Ora	57	16.2/18.6	543	960

REGISTERED CIVIL ENGINEER — DATE 06/17/09

12-14-09
PLANS APPROVAL DATE

REGISTERED PROFESSIONAL ENGINEER — Chien-Tai Yang — No. C 66394 — Exp. 6-30-10 — CIVIL — STATE OF CALIFORNIA

THE STATE OF CALIFORNIA OR ITS OFFICERS OR AGENTS SHALL NOT BE RESPONSIBLE FOR THE ACCURACY OR COMPLETENESS OF SCANNED COPIES OF THIS PLAN SHEET.

ORANGE COUNTY TRANSPORTATION AUTHORITY
550 S. MAIN STREET
ORANGE, CA 92863-1584

EARTH MECHANICS, INC.
17660 NEWHOPE STREET, SUITE E
FOUNTAIN VALLEY, CA 92708

FOR PLAN VIEW SEE "RETAINING WALL NO. 538, LOG OF TEST BORINGS NO. 1"

NOTES:

(1) This LOTB sheet was prepared in accordance with the Caltrans Soil and Rock Logging, Classification and Presentation Manual (June 2007)
(2) 2.4" samples were taken using a California Modified Sampler.
(3) An automatic trip hammer system consisting of a hammer weight of 140 lbs falling a distance of 30" was used to advance the drive sampler.
(4) Conversion factor from 2.4" Modified California Ring Sampler blowcounts to Standard Penetration Test (SPT) blowcounts is 0.5.

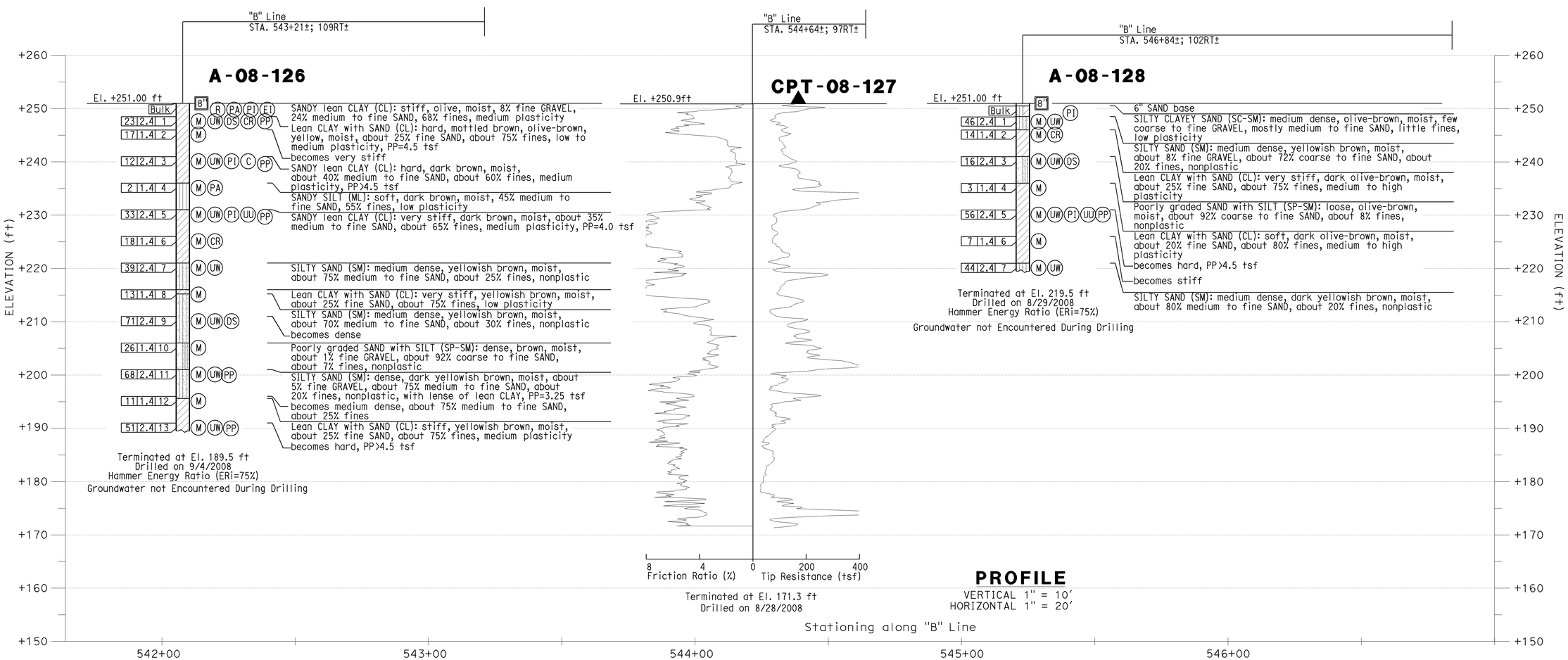

PROFILE
VERTICAL 1" = 10'
HORIZONTAL 1" = 20'

Jon Hamaguchi — DESIGN OVERSIGHT — 6-24-09 SIGN OFF DATE	DRAWN BY: J.Fang CHECKED BY: L.Cheang	FIELD INVESTIGATION BY: R.Jie	PREPARED FOR THE STATE OF CALIFORNIA DEPARTMENT OF TRANSPORTATION	C.Yang PROJECT ENGINEER	BRIDGE NO. 55E0086 POST MILES 16.2/18.6	RETAINING WALL NO. 538 LOG OF TEST BORINGS NO. 3

DESIGN GENERAL PLAN SHEET (ENGLISH) (REV. 2/25/05)

ORIGINAL SCALE IN INCHES FOR REDUCED PLANS 0 1 2 3

CU 12
EA 0F0311

DISREGARD PRINTS BEARING EARLIER REVISION DATES → 4/30/09

REVISION DATES (PRELIMINARY STAGE ONLY)

SHEET 81 OF 83

FILE => 55e-538-z-538-ltb03.dgn

USERNAME => trmikesl DATE PLOTTED => 23-DEC-2009 TIME PLOTTED => 14:02

Dist	COUNTY	ROUTE	POST MILES TOTAL PROJECT	SHEET No.	TOTAL SHEETS
12	Ora	57	16.2/18.6	544	960

REGISTERED CIVIL ENGINEER — DATE 06/17/09

12-14-09
PLANS APPROVAL DATE

REGISTERED PROFESSIONAL ENGINEER — Chien-Tai Yang — No. C 66394 — Exp. 6-30-10 — CIVIL — STATE OF CALIFORNIA

THE STATE OF CALIFORNIA OR ITS OFFICERS OR AGENTS SHALL NOT BE RESPONSIBLE FOR THE ACCURACY OR COMPLETENESS OF SCANNED COPIES OF THIS PLAN SHEET.

ORANGE COUNTY TRANSPORTATION AUTHORITY
550 S. MAIN STREET
ORANGE, CA 92863-1584

EARTH MECHANICS, INC.
17660 NEWHOPE STREET, SUITE E
FOUNTAIN VALLEY, CA 92708

REFERENCE: CALTRANS SOIL & ROCK LOGGING, CLASSIFICATION, AND PRESENTATION MANUAL (JUNE 2007)

CEMENTATION

Description	Criteria
Weak	Crumbles or breaks with handling or little finger pressure.
Moderate	Crumbles or breaks with considerable finger pressure.
Strong	Will not crumble or break with finger pressure.

CONSISTENCY OF COHESIVE SOILS

Description	Unconfined Compressive Strength (tsf)	Pocket Penetrometer Measurement (tsf)	Torvane Measurement (tsf)	Field Approximation
Very Soft	< 0.25	< 0.25	< 0.12	Easily penetrated several inches by fist
Soft	0.25 to 0.50	0.25 to 0.50	0.12 to 0.25	Easily penetrated several inches by thumb
Medium Stiff	0.50 to 1.0	0.50 to 1.0	0.25 to 0.50	Penetrated several inches by thumb with moderate effort
Stiff	1 to 2	1 to 2	0.50 to 1.0	Readily indented by thumb but penetrated only with great effort
Very Stiff	2 to 4	2 to 4	1.0 to 2.0	Readily indented by thumbnail
Hard	> 4.0	> 4.0	> 2.0	Indented by thumbnail with difficulty

BOREHOLE IDENTIFICATION

Symbol	Hole Type	Description
Size	A	Auger Boring
Size	R P	Rotary drilled boring Rotary percussion boring (air)
Size	R	Rotary drilled diamond core
Size	HD HA	Hand driven (1-inch soil tube) Hand Auger
●	D	Dynamic Cone Penetration Boring
▲	CPT	Cone Penetration Test (ASTM D 5778-95)
⬚	O	Other

Note: Size in inches.

PLASTICITY OF FINE-GRAINED SOILS

Description	Criteria
Nonplastic	A 1/8-inch thread cannot be rolled at any water content.
Low	The thread can barely be rolled and the lump cannot be formed when drier than the plastic limit.
Medium	The thread is easy to roll and not much time is required to reach the plastic limit. The thread cannot be rerolled after reaching the plastic limit. The lump crumbles when drier than the plastic limit.
High	It takes considerable time rolling and kneading to reach the plastic limit. The thread can be rerolled several times after reaching the plastic limit. The lump can be formed without crumbling when drier than the plastic limit.

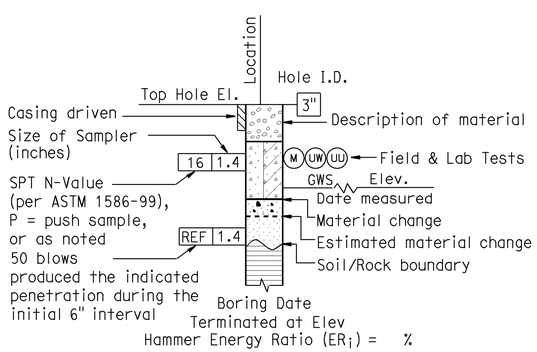

ROTARY BORING

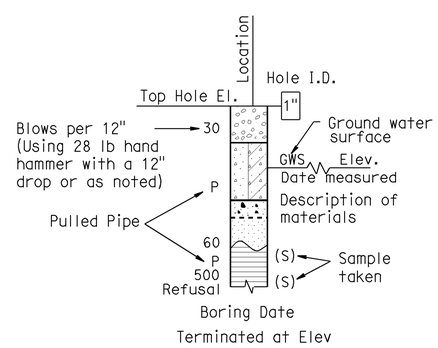

HAND BORING

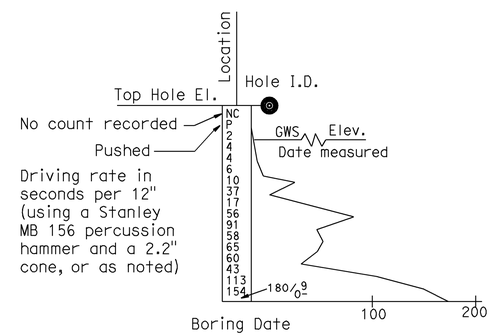

DYNAMIC CONE PENETRATION BORING

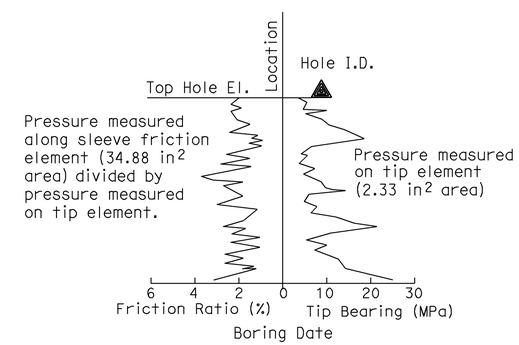

CONE PENETRATION TEST (CPT) SOUNDING

DESIGN OVERSIGHT — Jon Hamaguchi
6-24-09
SIGN OFF DATE

DRAWN BY: J.Fang
CHECKED BY: L.Cheang

FIELD INVESTIGATION BY:
R.Jie

PREPARED FOR THE STATE OF CALIFORNIA DEPARTMENT OF TRANSPORTATION

C.Yang
PROJECT ENGINEER

BRIDGE NO. 55E0086
POST MILES 16.2/18.6

RETAINING WALL NO. 538
LOG OF TEST BORINGS NO. 4

DESIGN GENERAL PLAN SHEET (ENGLISH) (REV. 2/25/05)

ORIGINAL SCALE IN INCHES FOR REDUCED PLANS 0 1 2 3

CU 12
EA 0F0311

DISREGARD PRINTS BEARING EARLIER REVISION DATES

REVISION DATES (PRELIMINARY STAGE ONLY)

SHEET 82 OF 83

FILE => 55e-538-z-538-ltb04.dgn

USERNAME => ttmirkes1 DATE PLOTTED => 23-DEC-2009 TIME PLOTTED => 14:02

REFERENCE: CALTRANS SOIL & ROCK LOGGING, CLASSIFICATION, AND PRESENTATION MANUAL (JUNE 2007)

GROUP SYMBOLS AND NAMES

Graphic/Symbol	Group Names
GW	Well-graded GRAVEL Well-graded GRAVEL with SAND
GP	Poorly graded GRAVEL Poorly graded GRAVEL with SAND
GW-GM	Well-graded GRAVEL with SILT Well-graded GRAVEL with SILT and SAND
GW-GC	Well-graded GRAVEL with CLAY (or SILTY CLAY) Well-graded GRAVEL with CLAY and SAND (or SILTY CLAY and SAND)
GP-GM	Poorly graded GRAVEL with SILT Poorly graded GRAVEL with SILT and SAND
GP-GC	Poorly graded GRAVEL with CLAY (or SILTY CLAY) Poorly graded GRAVEL with CLAY and SAND (or SILTY CLAY and SAND)
GM	SILTY GRAVEL SILTY GRAVEL with SAND
GC	CLAYEY GRAVEL CLAYEY GRAVEL with SAND
GC-GM	SILTY, CLAYEY GRAVEL SILTY, CLAYEY GRAVEL with SAND
SW	Well-graded SAND Well-graded SAND with GRAVEL
SP	Poorly graded SAND Poorly graded SAND with GRAVEL
SW-SM	Well-graded SAND with SILT Well-graded SAND with SILT and GRAVEL
SW-SC	Well-graded SAND with CLAY (or SILTY CLAY) Well-graded SAND with CLAY and GRAVEL (or SILTY CLAY and GRAVEL)
SP-SM	Poorly graded SAND with SILT Poorly graded SAND with SILT and GRAVEL
SP-SC	Poorly graded SAND with CLAY (or SILTY CLAY) Poorly graded SAND with CLAY and GRAVEL (or SILTY CLAY and GRAVEL)
SM	SILTY SAND SILTY SAND with GRAVEL
SC	CLAYEY SAND CLAYEY SAND with GRAVEL
SC-SM	SILTY, CLAYEY SAND SILTY, CLAYEY SAND with GRAVEL
PT	PEAT
	COBBLES COBBLES and BOULDERS BOULDERS

Graphic/Symbol	Group Names
CL	Lean CLAY Lean CLAY with SAND Lean CLAY with GRAVEL SANDY lean CLAY SANDY lean CLAY with GRAVEL GRAVELLY lean CLAY GRAVELLY lean CLAY with SAND
CL-ML	SILTY CLAY SILTY CLAY with SAND SILTY CLAY with GRAVEL SANDY SILTY CLAY SANDY SILTY CLAY with GRAVEL GRAVELLY SILTY CLAY GRAVELLY SILTY CLAY with SAND
ML	SILT SILT with SAND SILT with GRAVEL SANDY SILT SANDY SILT with GRAVEL GRAVELLY SILT GRAVELLY SILT with SAND
OL	ORGANIC lean CLAY ORGANIC lean CLAY with SAND ORGANIC lean CLAY with GRAVEL SANDY ORGANIC lean CLAY SANDY ORGANIC lean CLAY with GRAVEL GRAVELLY ORGANIC lean CLAY GRAVELLY ORGANIC lean CLAY with SAND
OL	ORGANIC SILT ORGANIC SILT with SAND ORGANIC SILT with GRAVEL SANDY ORGANIC SILT SANDY ORGANIC SILT with GRAVEL GRAVELLY ORGANIC SILT GRAVELLY ORGANIC SILT with SAND
CH	Fat CLAY Fat CLAY with SAND Fat CLAY with GRAVEL SANDY fat CLAY SANDY fat CLAY with GRAVEL GRAVELLY fat CLAY GRAVELLY fat CLAY with SAND
MH	Elastic SILT Elastic SILT with SAND Elastic SILT with GRAVEL SANDY elastic SILT SANDY elastic SILT with GRAVEL GRAVELLY elastic SILT GRAVELLY elastic SILT with SAND
OH	ORGANIC fat CLAY ORGANIC fat CLAY with SAND ORGANIC fat CLAY with GRAVEL SANDY ORGANIC fat CLAY SANDY ORGANIC fat CLAY with GRAVEL GRAVELLY ORGANIC fat CLAY GRAVELLY ORGANIC fat CLAY with SAND
OH	ORGANIC elastic SILT ORGANIC elastic SILT with SAND ORGANIC elastic SILT with GRAVEL SANDY ORGANIC elastic SILT SANDY ORGANIC elastic SILT with GRAVEL GRAVELLY ORGANIC elastic SILT GRAVELLY ORGANIC elastic SILT with SAND
OL/OH	ORGANIC SOIL ORGANIC SOIL with SAND ORGANIC SOIL with GRAVEL SANDY ORGANIC SOIL SANDY ORGANIC SOIL with GRAVEL GRAVELLY ORGANIC SOIL GRAVELLY ORGANIC SOIL with SAND

FIELD AND LABORATORY TESTING

- (C) Consolidation (ASTM D 2435)
- (CL) Collapse Potential (ASTM D 5333)
- (CP) Compaction Curve (CTM 216)
- (CR) Corrosivity Testing (CTM 643, CTM 422, CTM 417)
- (CU) Consolidated Undrained Triaxial (ASTM D 4767)
- (DS) Direct Shear (ASTM D 3080)
- (EI) Expansion Index (ASTM D 4829)
- (M) Moisture Content (ASTM D 2216)
- (OC) Organic Content-% (ASTM D 2974)
- (P) Permeability (CTM 220)
- (PA) Particle Size Analysis (ASTM D 422)
- (PI) Plasticity Index (AASHTO T 90) Liquid Limit (AASHTO T 89)
- (PL) Point Load Index (ASTM D 5731)
- (PM) Pressure Meter
- (PP) Pocket Penetrometer
- (R) R-Value (CTM 301)
- (SE) Sand Equivalent (CTM 217)
- (SG) Specific Gravity (AASHTO T 100)
- (SL) Shrinkage Limit (ASTM D 427)
- (SW) Swell Potential (ASTM D 4546)
- (TV) Pocket Torvane
- (UC) Unconfined Compression-Soil (ASTM D 2166) Unconfined Compression-Rock (ASTM D 2938)
- (UU) Unconsolidated Undrained Triaxial (ASTM D 2850)
- (UW) Unit Weight (ASTM D 4767)
- (VS) Vane Shear (AASHTO T 223)

Dist	COUNTY	ROUTE	POST MILES TOTAL PROJECT	SHEET No.	TOTAL SHEETS
12	Ora	57	16.2/18.6	545	960

REGISTERED CIVIL ENGINEER — DATE 06/17/09

12-14-09
PLANS APPROVAL DATE

REGISTERED PROFESSIONAL ENGINEER — Chien-Tai Yang — No. C 66394 — Exp. 6-30-10 — CIVIL — STATE OF CALIFORNIA

THE STATE OF CALIFORNIA OR ITS OFFICERS OR AGENTS SHALL NOT BE RESPONSIBLE FOR THE ACCURACY OR COMPLETENESS OF SCANNED COPIES OF THIS PLAN SHEET.

ORANGE COUNTY TRANSPORTATION AUTHORITY
550 S. MAIN STREET
ORANGE, CA 92863-1584

EARTH MECHANICS, INC.
17660 NEWHOPE STREET, SUITE E
FOUNTAIN VALLEY, CA 92708

APPARENT DENSITY OF COHESIONLESS SOILS

Description	SPT N_{60} (Blows / 12 inches)
Very loose	0 - 4
Loose	5 - 10
Medium Dense	11 - 30
Dense	31 - 50
Very Dense	> 50

MOISTURE

Description	Criteria
Dry	Absence of moisture, dusty, dry to the touch
Moist	Damp but no visible water
Wet	Visible free water, usually soil is below water table

PERCENT OR PROPORTION OF SOILS

Description	Criteria
Trace	Particles are present but estimated to be less than 5%
Few	5 to 10%
Little	15 to 25%
Some	30 to 45%
Mostly	50 to 100%

PARTICLE SIZE

Description		Size
Boulder		> 12"
Cobble		3" to 12"
Gravel	Coarse	3/4" to 3"
	Fine	No. 4 to 3/4"
Sand	Coarse	No. 10 to No. 4
	Medium	No. 40 to No. 10
	Fine	No. 200 to No. 40

DESIGN OVERSIGHT — Jon Hamaguchi
6-24-09
SIGN OFF DATE

DRAWN BY: J.Fang
CHECKED BY: L.Cheang

FIELD INVESTIGATION BY:
R.Jie

PREPARED FOR THE STATE OF CALIFORNIA DEPARTMENT OF TRANSPORTATION

C.Yang
PROJECT ENGINEER

BRIDGE NO. 55E0086
POST MILES 16.2/18.6

RETAINING WALL NO. 538
LOG OF TEST BORINGS NO. 5

DESIGN GENERAL PLAN SHEET (ENGLISH) (REV. 2/25/05)

ORIGINAL SCALE IN INCHES FOR REDUCED PLANS 0 1 2 3

CU 12
EA 0F0311

DISREGARD PRINTS BEARING EARLIER REVISION DATES

REVISION DATES (PRELIMINARY STAGE ONLY)

SHEET 83 OF 83

FILE => 55e-538-z-538-ltb05.dgn

USERNAME => trmikes DATE PLOTTED => 21-DEC-2009 TIME PLOTTED => 09:13

Dist	COUNTY	ROUTE	POST MILES TOTAL PROJECT	SHEET No.	TOTAL SHEETS
12	Ora	57	16.2/18.6	546	960

LICENSED LANDSCAPE ARCHITECT

12-14-09
PLANS APPROVAL DATE

LICENSED LANDSCAPE ARCHITECT
CATHY L. JOHNSON
No. 4245
Expiration Date
01-31-10
Renewal Date
07-15-09
Date
STATE OF CALIFORNIA

THE STATE OF CALIFORNIA OR ITS OFFICERS OR AGENTS SHALL NOT BE RESPONSIBLE FOR THE ACCURACY OR COMPLETENESS OF SCANNED COPIES OF THIS PLAN SHEET.

RBF CONSULTING
14725 ALTON PKWY
IRVINE, CA 92618

ORANGE COUNTY
TRANSPORTATION AUTHORITY
550 SOUTH MAIN STREET
ORANGE, CA 92863

NOTE:

FOR ACCURATE RIGHT OF WAY AND ACCESS DATA,
CONTACT RIGHT OF WAY ENGINEERING AT THE DISTRICT OFFICE.

LEGEND TO MAINTAIN Exist IRRIGATION SYSTEMS:

- BACKFLOW PREVENTER ASSEMBLY
- BOOSTER PUMP
- FLOW SENSOR
- GATE VALVE
- IRRIGATION CONTROLLER IN CABINET
- REMOTE CONTROL VALVE
- WATER METER
- MAIN SUPPLY LINE
- SHRUB SPRAY AND GEAR DRIVEN SPRINKLERS
- DRIP IRRIGATION

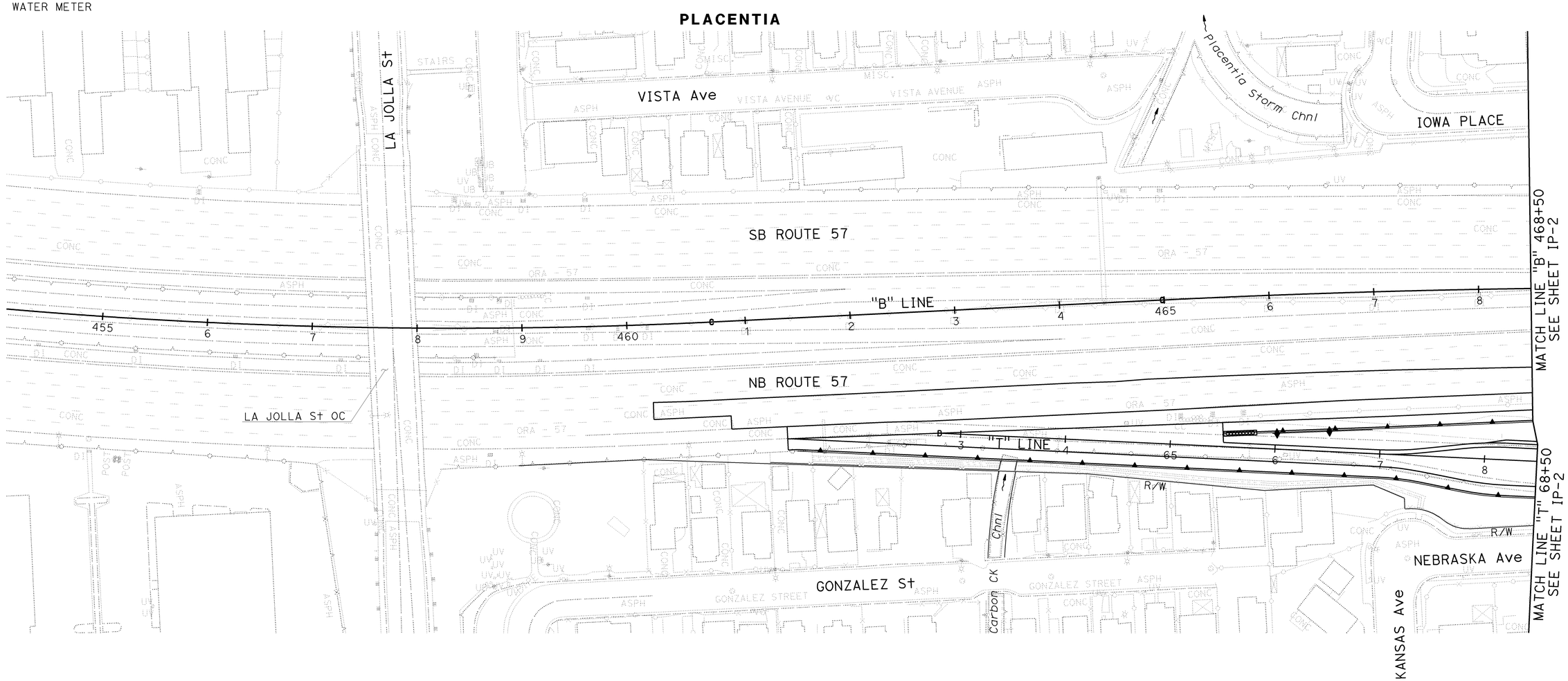

NO IRRIGATION WORK THIS SHEET

IRRIGATION PLAN

SCALE 1" = 50'

IP-1

THIS PLAN ACCURATE FOR IRRIGATION WORK ONLY.

STATE OF CALIFORNIA - DEPARTMENT OF TRANSPORTATION
Caltrans

CONSULTANT SENIOR LANDSCAPE ARCHITECT: JOHN P. ANDREW
CALCULATED-DESIGNED BY: NIKI WU
CHECKED BY: CATHY L. JOHNSON
REVISED BY
DATE REVISED

H:\pdata\10105878\Admin\submittals\2009-07-15 FINAL Electronic-Only Submittal\DGN-rainkes3PLOT File21-DEC-2009 09:29 FINAL SUBMITTAL\c0F031t1001.dgn

LAST REVISION DATE PLOTTED => 21-DEC-2009
00-00-00 TIME PLOTTED => 09:29

BORDER LAST REVISED 4/11/2008
RELATIVE BORDER SCALE IS IN INCHES 0 1 2 3
USERNAME => trmikes1
DGN FILE => c0F031t1001.dgn
CU 12220
EA 0F0311

Dist	COUNTY	ROUTE	POST MILES TOTAL PROJECT	SHEET No.	TOTAL SHEETS
12	Ora	57	16.2/18.6	547	960

LICENSED LANDSCAPE ARCHITECT

12-14-09
PLANS APPROVAL DATE

LICENSED LANDSCAPE ARCHITECT CATHY L. JOHNSON No. 4245 Expiration Date 01-31-10 Renewal Date 07-15-09 Date STATE OF CALIFORNIA

THE STATE OF CALIFORNIA OR ITS OFFICERS OR AGENTS SHALL NOT BE RESPONSIBLE FOR THE ACCURACY OR COMPLETENESS OF SCANNED COPIES OF THIS PLAN SHEET.

RBF CONSULTING
14725 ALTON PKWY
IRVINE, CA 92618

ORANGE COUNTY
TRANSPORTATION AUTHORITY
550 SOUTH MAIN STREET
ORANGE, CA 92863

NOTE:

FOR ACCURATE RIGHT OF WAY AND ACCESS DATA,
CONTACT RIGHT OF WAY ENGINEERING AT THE DISTRICT OFFICE.

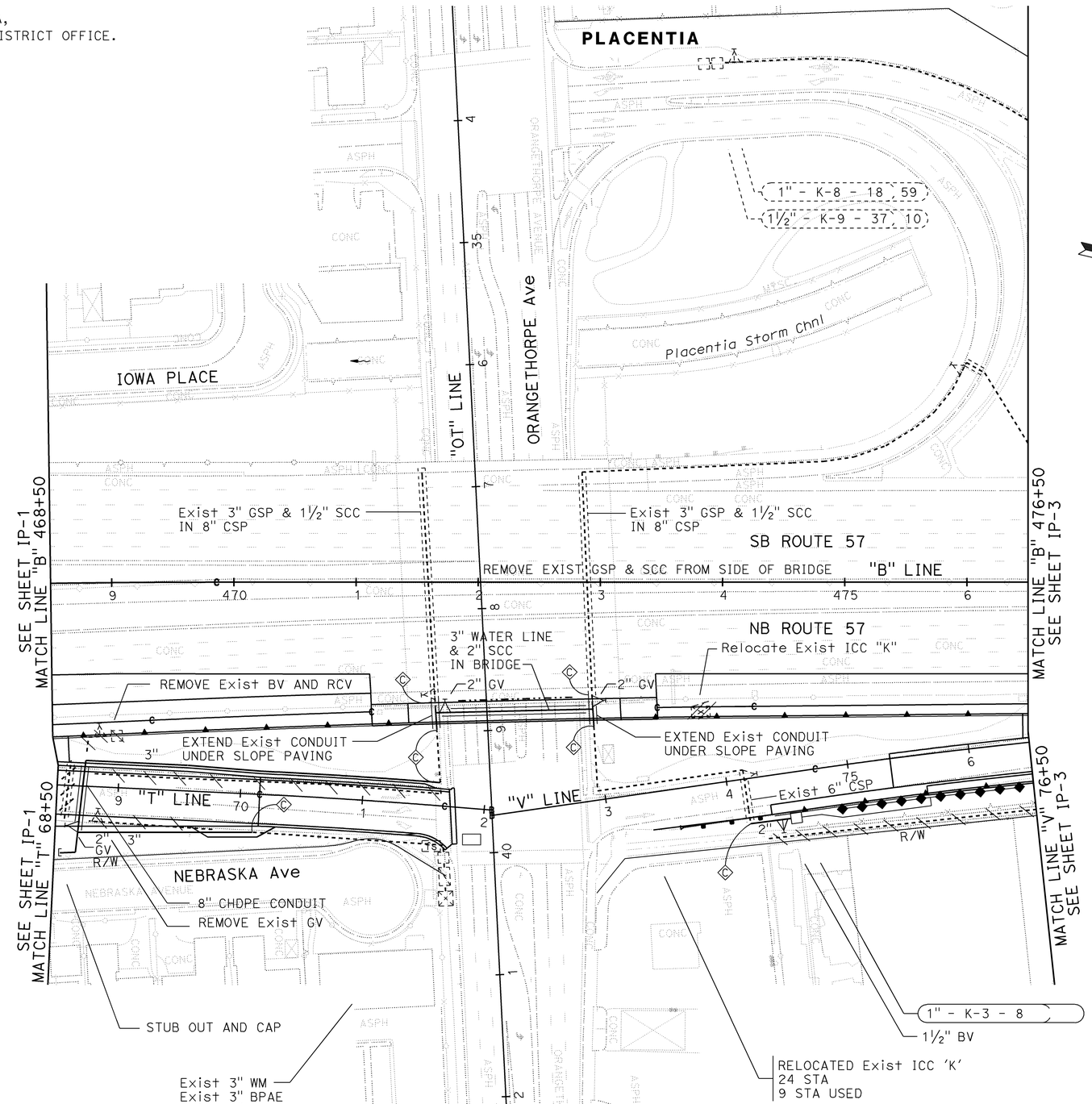

IRRIGATION PLAN

SCALE 1" = 50'

THIS PLAN ACCURATE FOR IRRIGATION WORK ONLY.

IP-2

STATE OF CALIFORNIA - DEPARTMENT OF TRANSPORTATION
Caltrans

CONSULTANT SENIOR LANDSCAPE ARCHITECT: JOHN P. ANDREW
CALCULATED-DESIGNED BY: NIKI WU
CHECKED BY: CATHY L. JOHNSON
REVISED BY
DATE REVISED

H:\pdata\10105878\Admin\submittals\2009-07-15 FINAL Electronic-Only Submittal\DGN\rmikes3PLOT File21-DEC-2009 09:29AM SUBMITTAL\c0F031I002.dgn

LAST REVISION 00-00-00 | DATE PLOTTED => 21-DEC-2009 | TIME PLOTTED => 09:29

BORDER LAST REVISED 4/11/2008 | RELATIVE BORDER SCALE IS IN INCHES 0 1 2 3 | USERNAME => trmikesl | DGN FILE => c0F031I1002.dgn | CU 12220 | EA 0F0311

NOTE:
FOR ACCURATE RIGHT OF WAY AND ACCESS DATA,
CONTACT RIGHT OF WAY ENGINEERING AT THE DISTRICT OFFICE.

Dist	COUNTY	ROUTE	POST MILES TOTAL PROJECT	SHEET No.	TOTAL SHEETS
12	Ora	57	16.2/18.6	548	960

LICENSED LANDSCAPE ARCHITECT

12-14-09
PLANS APPROVAL DATE

LICENSED LANDSCAPE ARCHITECT
CATHY L. JOHNSON No. 4245
Expiration Date 01-31-10
Renewal Date 07-15-09
Date
STATE OF CALIFORNIA

THE STATE OF CALIFORNIA OR ITS OFFICERS OR AGENTS SHALL NOT BE RESPONSIBLE FOR THE ACCURACY OR COMPLETENESS OF SCANNED COPIES OF THIS PLAN SHEET.

RBF CONSULTING
14725 ALTON PKWY
IRVINE, CA 92618

ORANGE COUNTY
TRANSPORTATION AUTHORITY
550 SOUTH MAIN STREET
ORANGE, CA 92863

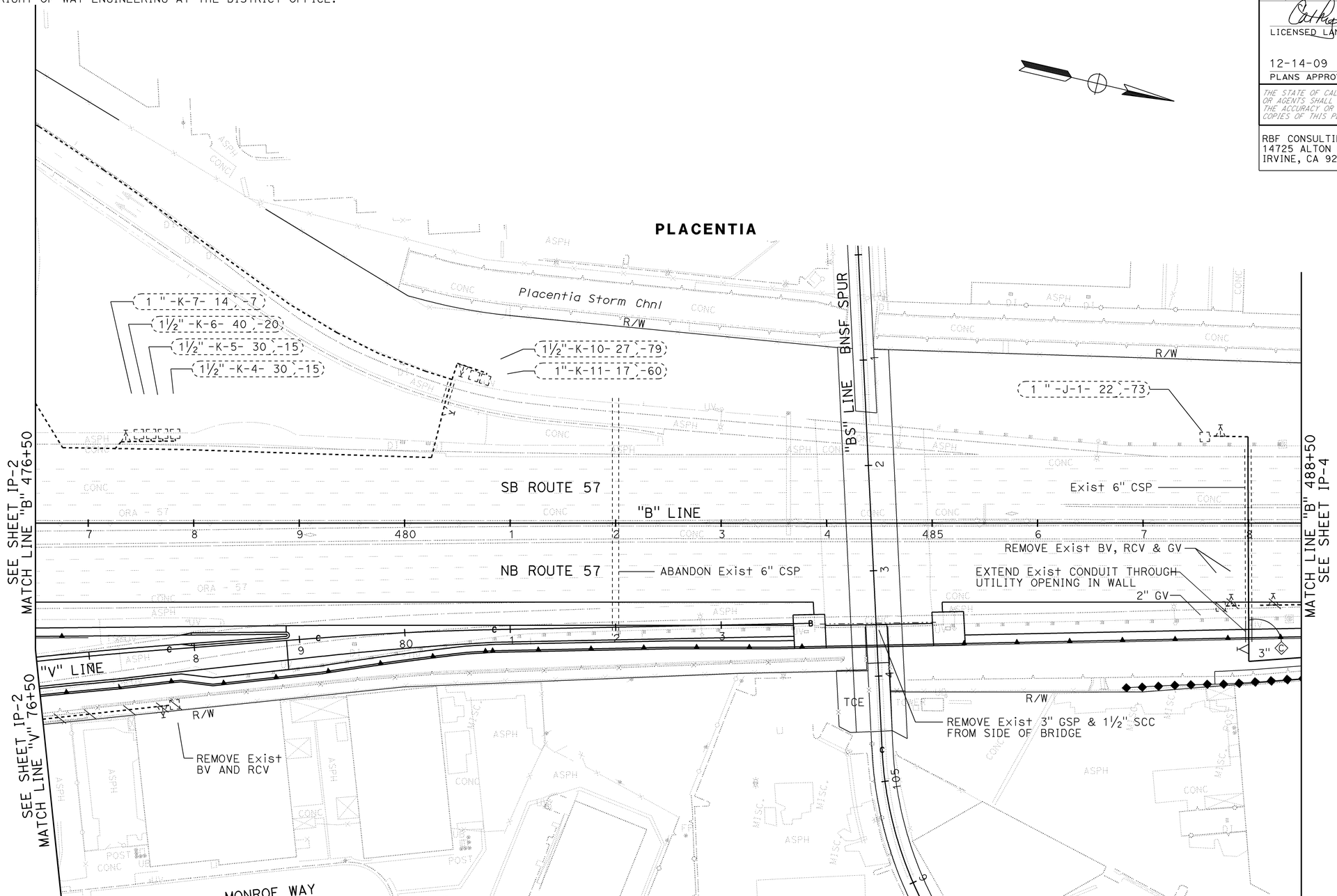

IRRIGATION PLAN

SCALE 1" = 50'

THIS PLAN ACCURATE FOR IRRIGATION WORK ONLY.

IP-3

STATE OF CALIFORNIA - DEPARTMENT OF TRANSPORTATION
Caltrans
CONSULTANT SENIOR LANDSCAPE ARCHITECT: JOHN P. ANDREW
CALCULATED-DESIGNED BY: CATHY L. JOHNSON
CHECKED BY: NIKI WU
REVISED BY: JJV
DATE REVISED: 12/03/09

H:\pdata\10105878\Admin\submittals\2009-07-15 FINAL Electronic-Only Submittal\DGN-rarikes3PLOT File21-DEC-2009 09:29 SUBMITTAL\c0F031I003.dgn

LAST REVISION: 00-00-00
DATE PLOTTED => 21-DEC-2009
TIME PLOTTED => 09:29

Dist	COUNTY	ROUTE	POST MILES TOTAL PROJECT	SHEET No.	TOTAL SHEETS
12	Ora	57	16.2/18.6	549	960

LICENSED LANDSCAPE ARCHITECT

12-14-09
PLANS APPROVAL DATE

LICENSED LANDSCAPE ARCHITECT — CATHY L. JOHNSON No. 4245 — Expiration Date 01-31-10 — Renewal Date 07-15-09 — Date — STATE OF CALIFORNIA

THE STATE OF CALIFORNIA OR ITS OFFICERS OR AGENTS SHALL NOT BE RESPONSIBLE FOR THE ACCURACY OR COMPLETENESS OF SCANNED COPIES OF THIS PLAN SHEET.

RBF CONSULTING
14725 ALTON PKWY
IRVINE, CA 92618

ORANGE COUNTY
TRANSPORTATION AUTHORITY
550 SOUTH MAIN STREET
ORANGE, CA 92863

NOTE:

FOR ACCURATE RIGHT OF WAY AND ACCESS DATA,
CONTACT RIGHT OF WAY ENGINEERING AT THE DISTRICT OFFICE.

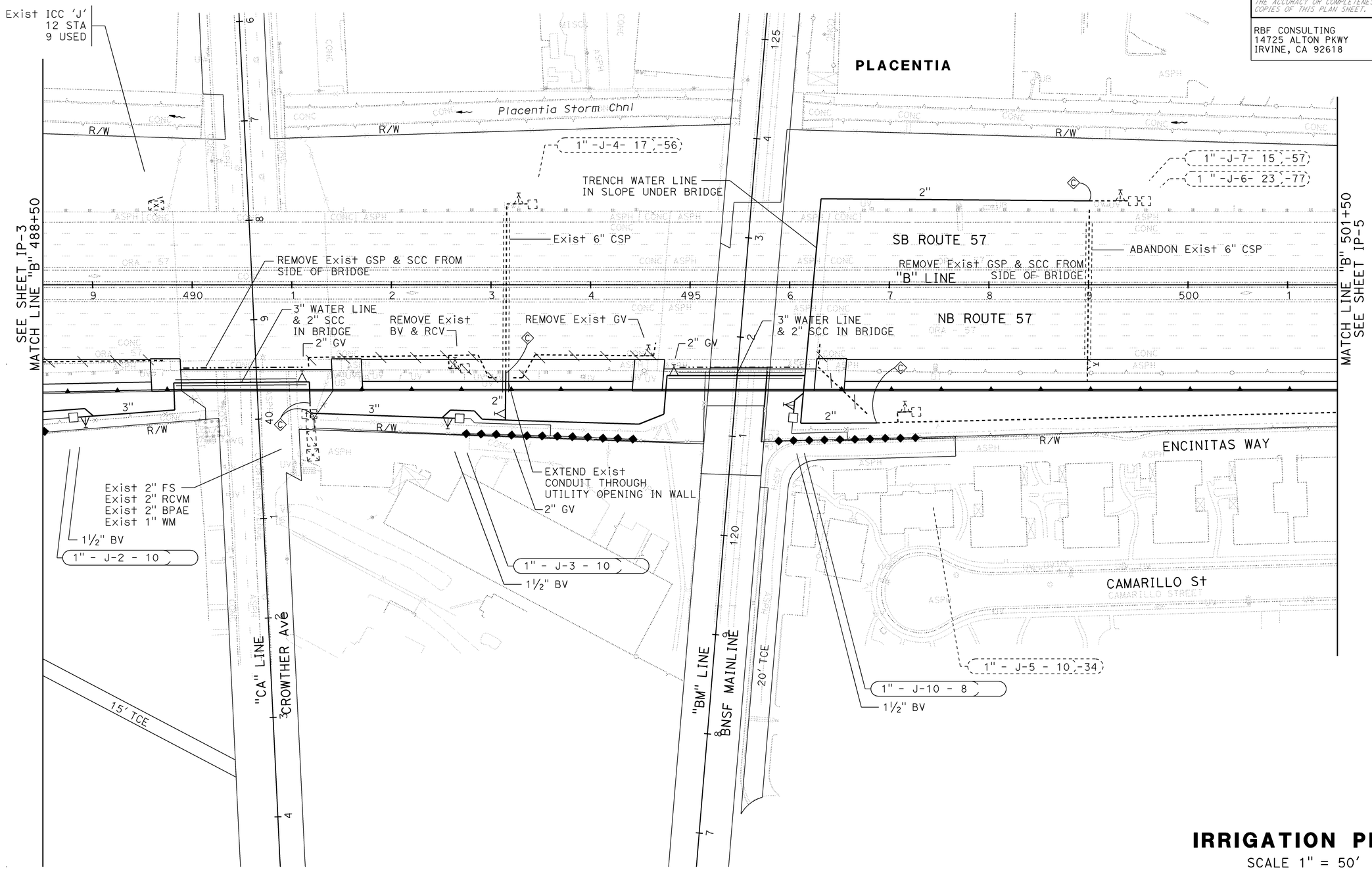

IRRIGATION PLAN

SCALE 1" = 50'

THIS PLAN ACCURATE FOR IRRIGATION WORK ONLY.

IP-4

STATE OF CALIFORNIA - DEPARTMENT OF TRANSPORTATION

Caltrans

CONSULTANT SENIOR LANDSCAPE ARCHITECT: JOHN P. ANDREW

CALCULATED-DESIGNED BY: NIKI WU

CHECKED BY: CATHY L. JOHNSON

REVISED BY: JJV

DATE REVISED: 12-03-09

LAST REVISION: 00-00-00

DATE PLOTTED => 21-DEC-2009
TIME PLOTTED => 09:30

H:\pdata\10105878\Admin\submittals\2009-07-15 FINAL Electronic-Only Submittal\DGN files\PLOT File\ 21-DEC-2009 09:30 SUBMITTAL\c0F0311t1004.dgn

BORDER LAST REVISED 4/11/2008

RELATIVE BORDER SCALE IS IN INCHES 0 1 2 3

USERNAME => trmikes1
DGN FILE => c0F0311t1004.dgn

CU 12220

EA 0F0311

Dist	COUNTY	ROUTE	POST MILES TOTAL PROJECT	SHEET No.	TOTAL SHEETS
12	Ora	57	16.2/18.6	550	960

LICENSED LANDSCAPE ARCHITECT

12-14-09
PLANS APPROVAL DATE

LICENSED LANDSCAPE ARCHITECT
CATHY L. JOHNSON
No. 4245
Expiration Date
01-31-10
Renewal Date
07-15-09
Date
STATE OF CALIFORNIA

THE STATE OF CALIFORNIA OR ITS OFFICERS OR AGENTS SHALL NOT BE RESPONSIBLE FOR THE ACCURACY OR COMPLETENESS OF SCANNED COPIES OF THIS PLAN SHEET.

RBF CONSULTING
14725 ALTON PKWY
IRVINE, CA 92618

ORANGE COUNTY
TRANSPORTATION AUTHORITY
550 SOUTH MAIN STREET
ORANGE, CA 92863

NOTE:

FOR ACCURATE RIGHT OF WAY AND ACCESS DATA,
CONTACT RIGHT OF WAY ENGINEERING AT THE DISTRICT OFFICE.

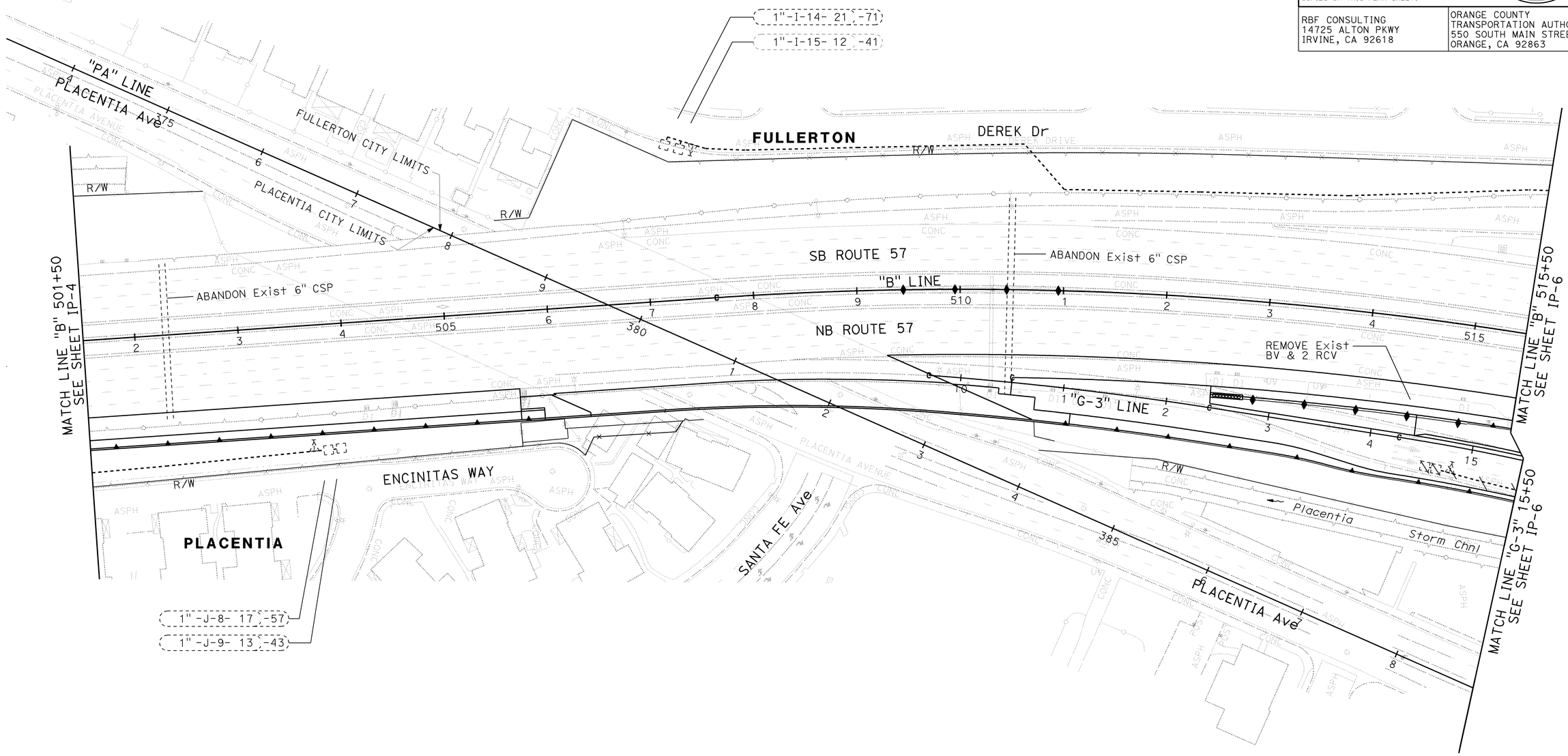

IRRIGATION PLAN

SCALE 1" = 50'

THIS PLAN ACCURATE FOR IRRIGATION WORK ONLY.

IP-5

STATE OF CALIFORNIA - DEPARTMENT OF TRANSPORTATION
Caltrans

CONSULTANT SENIOR LANDSCAPE ARCHITECT: JOHN P. ANDREW
CALCULATED-DESIGNED BY: NIKI WU
CHECKED BY: CATHY L. JOHNSON
REVISED BY: JJV
DATE REVISED: 12-03-09

H:\pdata\10105878\Admin\submittals\2009-07-15 FINAL Electronic-Only Submittal\DGN\c0F031I005.dgn
PLOT File: 21-DEC-2009 09:30 SUBMITTAL \c0F031I005.dgn

LAST REVISION: 00-00-00
DATE PLOTTED => 21-DEC-2009
TIME PLOTTED => 09:30

BORDER LAST REVISED 4/11/2008
RELATIVE BORDER SCALE IS IN INCHES 0 1 2 3
USERNAME => trmikesl
DGN FILE => c0F031I005.dgn
CU 12220
EA 0F0311

Dist	COUNTY	ROUTE	POST MILES TOTAL PROJECT	SHEET No.	TOTAL SHEETS
12	Ora	57	16.2/18.6	551	960

12-08-09
LICENSED LANDSCAPE ARCHITECT

12-14-09
PLANS APPROVAL DATE

LICENSED LANDSCAPE ARCHITECT CATHY L. JOHNSON No. 4246 Expiration Date 01-31-10 Renewal Date 07-15-09 Date STATE OF CALIFORNIA

THE STATE OF CALIFORNIA OR ITS OFFICERS OR AGENTS SHALL NOT BE RESPONSIBLE FOR THE ACCURACY OR COMPLETENESS OF SCANNED COPIES OF THIS PLAN SHEET.

RBF CONSULTING
14725 ALTON PKWY
IRVINE, CA 92618

ORANGE COUNTY
TRANSPORTATION AUTHORITY
550 SOUTH MAIN STREET
ORANGE, CA 92863

NOTE:
FOR ACCURATE RIGHT OF WAY AND ACCESS DATA, SEE RIGHT OF WAY ENGINEERING AT THE DISTRICT OFFICE.

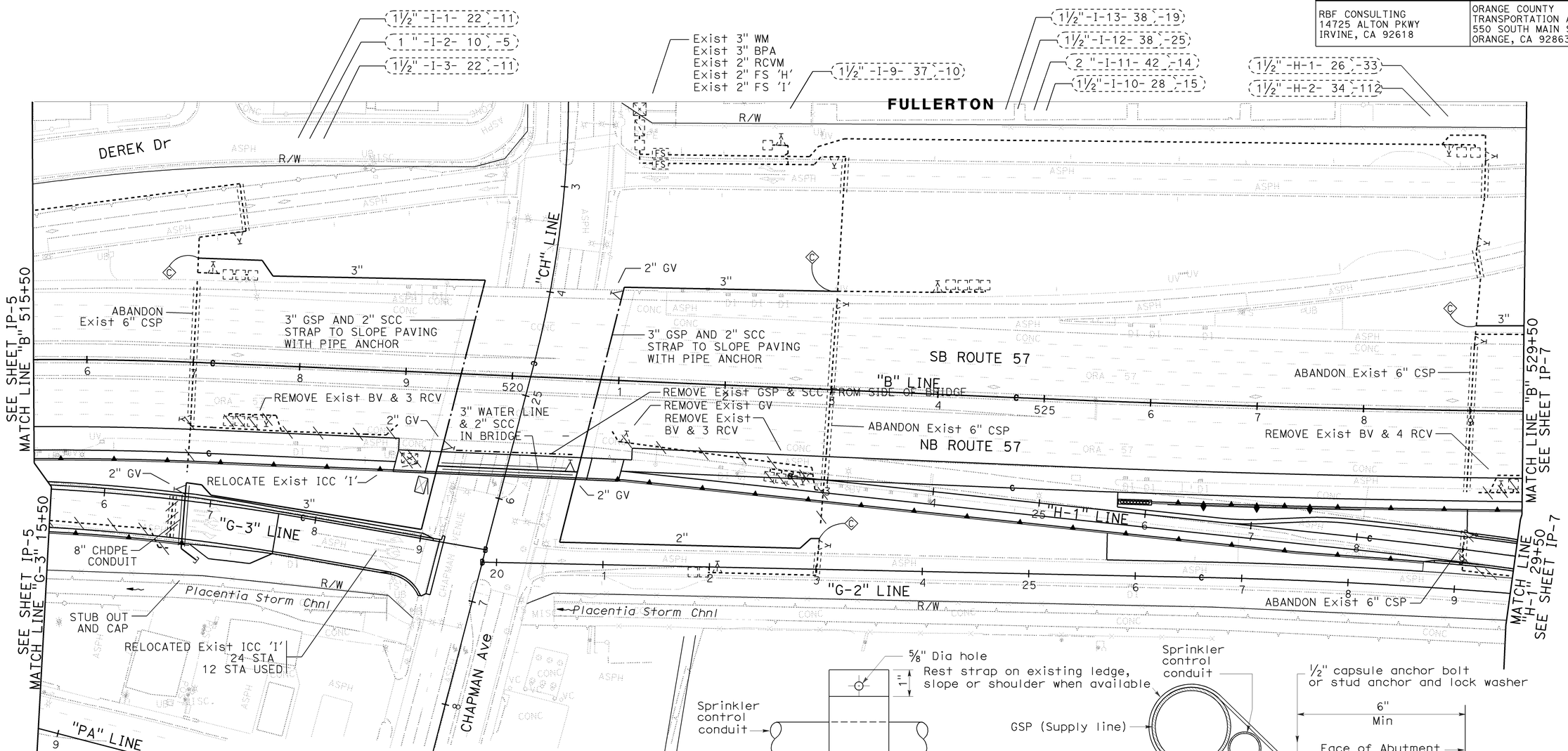

THIS PLAN ACCURATE FOR IRRIGATION WORK ONLY.

IRRIGATION PLAN

SCALE: 1" = 50'

IP-6

REVISED BY	DATE REVISED

CONSULTANT SENIOR LANDSCAPE ARCHITECT: JOHN P. ANDREW
CALCULATED-DESIGNED BY: NIKI WU
CHECKED BY: CATHY L. JOHNSON

STATE OF CALIFORNIA - DEPARTMENT OF TRANSPORTATION
Caltrans

J:\d0F031\revision1\c0F031I1006.dgn 21-DEC-2009 09:30 trmikesl

LAST REVISION 12-08-09 | DATE PLOTTED => 21-DEC-2009 | TIME PLOTTED => 09:30

BORDER LAST REVISED 4/11/2008 | RELATIVE BORDER SCALE IS IN INCHES 0 1 2 3 | USERNAME => trmikesl | DGN FILE => c0F031I1006.dgn | CU 12220 | EA 0F0311

Dist	COUNTY	ROUTE	POST MILES TOTAL PROJECT	SHEET No.	TOTAL SHEETS
12	Ora	57	16.2/18.6	552	960

12-08-09
LICENSED LANDSCAPE ARCHITECT

12-14-09
PLANS APPROVAL DATE

LICENSED LANDSCAPE ARCHITECT — CATHY L. JOHNSON No. 4246 — Expiration Date 01-31-10 — Renewal Date 07-15-09 — Date — STATE OF CALIFORNIA

THE STATE OF CALIFORNIA OR ITS OFFICERS OR AGENTS SHALL NOT BE RESPONSIBLE FOR THE ACCURACY OR COMPLETENESS OF SCANNED COPIES OF THIS PLAN SHEET.

RBF CONSULTING
14725 ALTON PKWY
IRVINE, CA 92618

ORANGE COUNTY
TRANSPORTATION AUTHORITY
550 SOUTH MAIN STREET
ORANGE, CA 92863

NOTE:
FOR ACCURATE RIGHT OF WAY AND ACCESS DATA, SEE RIGHT OF WAY ENGINEERING AT THE DISTRICT OFFICE.

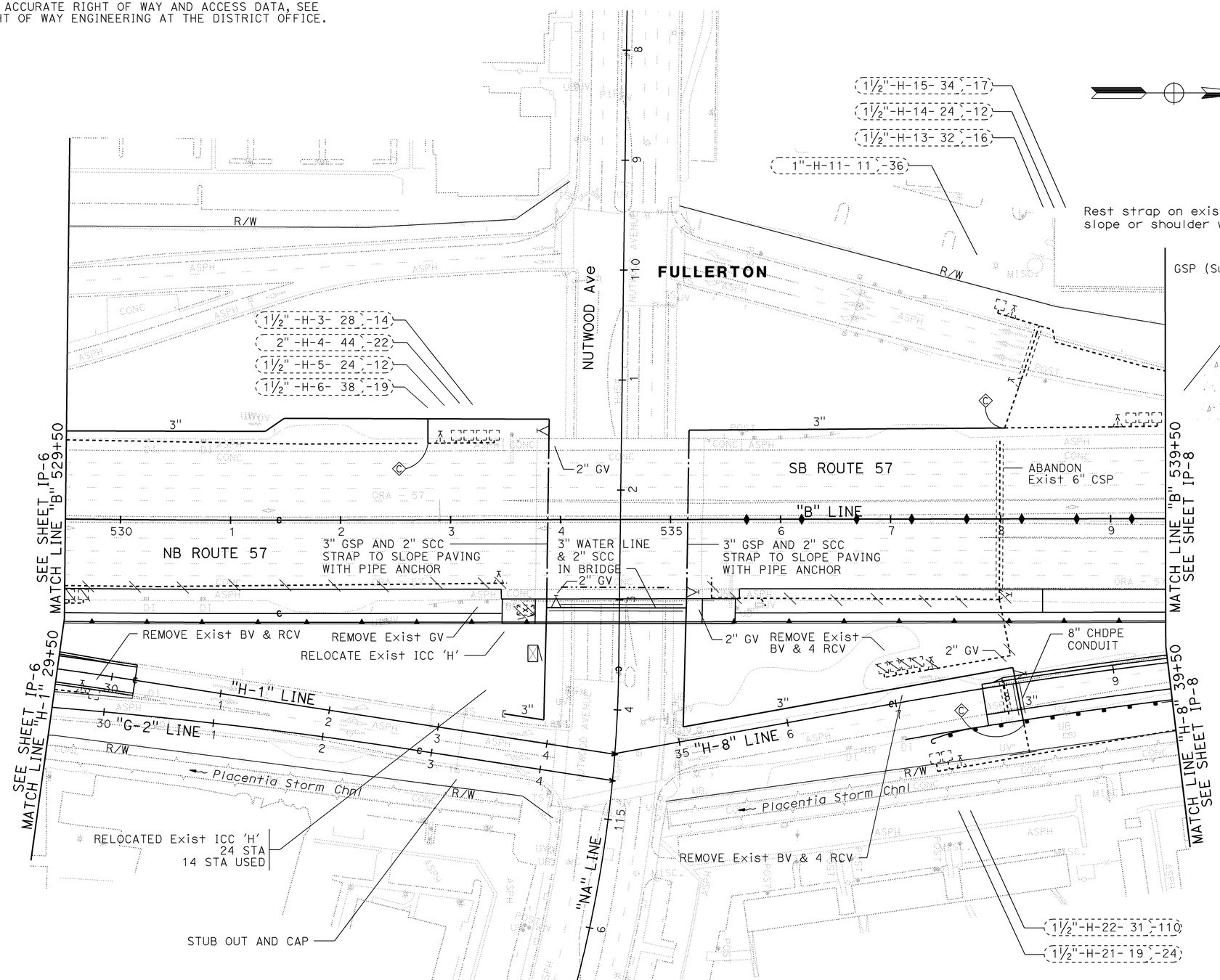

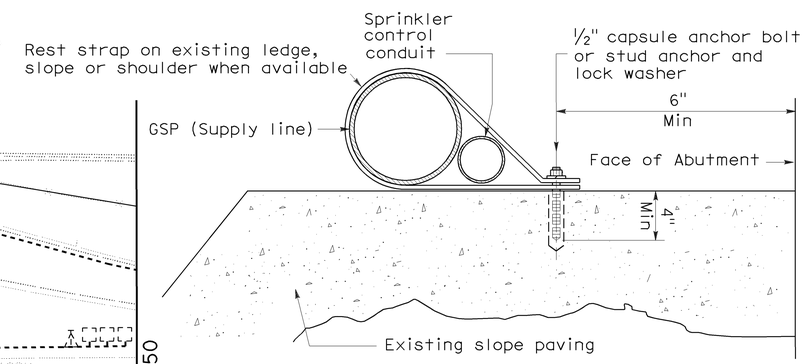

SECTION

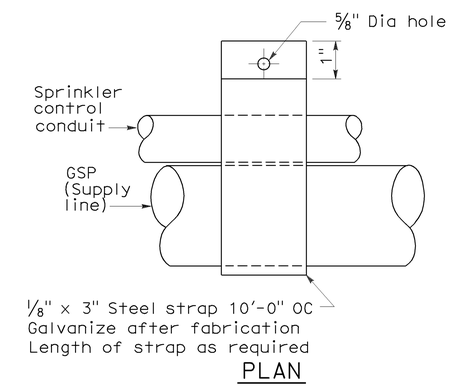

PLAN

PIPE ANCHOR

IRRIGATION PLAN

SCALE: 1" = 50'

THIS PLAN ACCURATE FOR IRRIGATION WORK ONLY.

IP-7

STATE OF CALIFORNIA - DEPARTMENT OF TRANSPORTATION
Caltrans

CONSULTANT SENIOR LANDSCAPE ARCHITECT: JOHN P. ANDREW
CHECKED BY: CATHY L. JOHNSON
CALCULATED-DESIGNED BY: NIKI WU
DATE REVISED: 21-DEC-2009 09:30
REVISED BY: trmikesl
J:\d0F031\revision1\c0F031I1007.dgn

LAST REVISION 12-08-09 | DATE PLOTTED => 21-DEC-2009 | TIME PLOTTED => 09:30

BORDER LAST REVISED 4/11/2008 | RELATIVE BORDER SCALE IS IN INCHES 0 1 2 3 | USERNAME => trmikesl | DGN FILE => c0F031I1007.dgn | CU 12220 | EA 0F0311

Dist	COUNTY	ROUTE	POST MILES TOTAL PROJECT	SHEET No.	TOTAL SHEETS
12	Ora	57	16.2/18.6	553	960

LICENSED LANDSCAPE ARCHITECT

12-14-09
PLANS APPROVAL DATE

LICENSED LANDSCAPE ARCHITECT
CATHY L. JOHNSON No. 4246
Expiration Date 01-31-10
Renewal Date 07-15-09
Date
STATE OF CALIFORNIA

THE STATE OF CALIFORNIA OR ITS OFFICERS OR AGENTS SHALL NOT BE RESPONSIBLE FOR THE ACCURACY OR COMPLETENESS OF SCANNED COPIES OF THIS PLAN SHEET.

RBF CONSULTING
14725 ALTON PKWY
IRVINE, CA 92618

ORANGE COUNTY
TRANSPORTATION AUTHORITY
550 SOUTH MAIN STREET
ORANGE, CA 92863

NOTE:

FOR ACCURATE RIGHT OF WAY AND ACCESS DATA,
CONTACT RIGHT OF WAY ENGINEERING AT THE DISTRICT OFFICE.

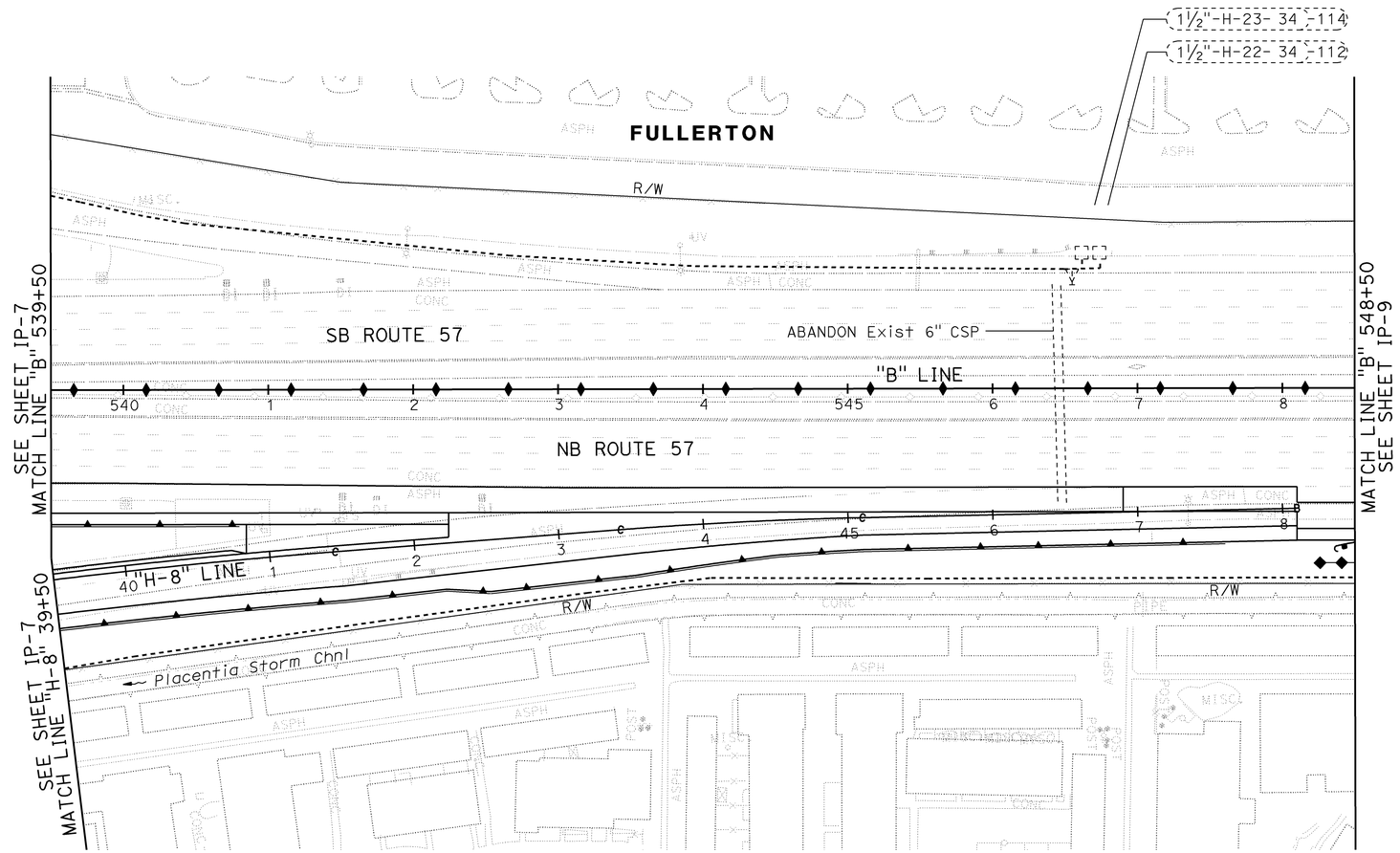

IRRIGATION PLAN

SCALE 1" = 50'

THIS PLAN ACCURATE FOR IRRIGATION WORK ONLY.

IP-8

STATE OF CALIFORNIA - DEPARTMENT OF TRANSPORTATION
Caltrans

JOHN P. ANDREW
CONSULTANT SENIOR LANDSCAPE ARCHITECT

CATHY L. JOHNSON
CALCULATED-DESIGNED BY

NIKI WU
CHECKED BY

REVISED BY
DATE REVISED

H:\pdata\10105878\Admin\submittals\2009-07-15 FINAL Electronic-Only Submittal\DGN rainbird3PLOT File21-DEC-2009 09:30 SUBMITTAL\c0F031I008.dgn

LAST REVISION 00-00-00
DATE PLOTTED => 21-DEC-2009
TIME PLOTTED => 09:30

BORDER LAST REVISED 4/11/2008
RELATIVE BORDER SCALE IS IN INCHES 0 1 2 3
USERNAME => trmikesl
DGN FILE => c0F031I008.dgn
CU 12220
EA 0F0311

Dist	COUNTY	ROUTE	POST MILES TOTAL PROJECT	SHEET No.	TOTAL SHEETS
12	Ora	57	16.2/18.6	554	960

LICENSED LANDSCAPE ARCHITECT

12-14-09
PLANS APPROVAL DATE

LICENSED LANDSCAPE ARCHITECT
CATHY L. JOHNSON No. 4246
Expiration Date 01-31-10
Renewal Date 07-15-09
Date
STATE OF CALIFORNIA

THE STATE OF CALIFORNIA OR ITS OFFICERS OR AGENTS SHALL NOT BE RESPONSIBLE FOR THE ACCURACY OR COMPLETENESS OF SCANNED COPIES OF THIS PLAN SHEET.

RBF CONSULTING
14725 ALTON PKWY
IRVINE, CA 92618

ORANGE COUNTY
TRANSPORTATION AUTHORITY
550 SOUTH MAIN STREET
ORANGE, CA 92863

NOTE:

FOR ACCURATE RIGHT OF WAY AND ACCESS DATA,
CONTACT RIGHT OF WAY ENGINEERING AT THE DISTRICT OFFICE.

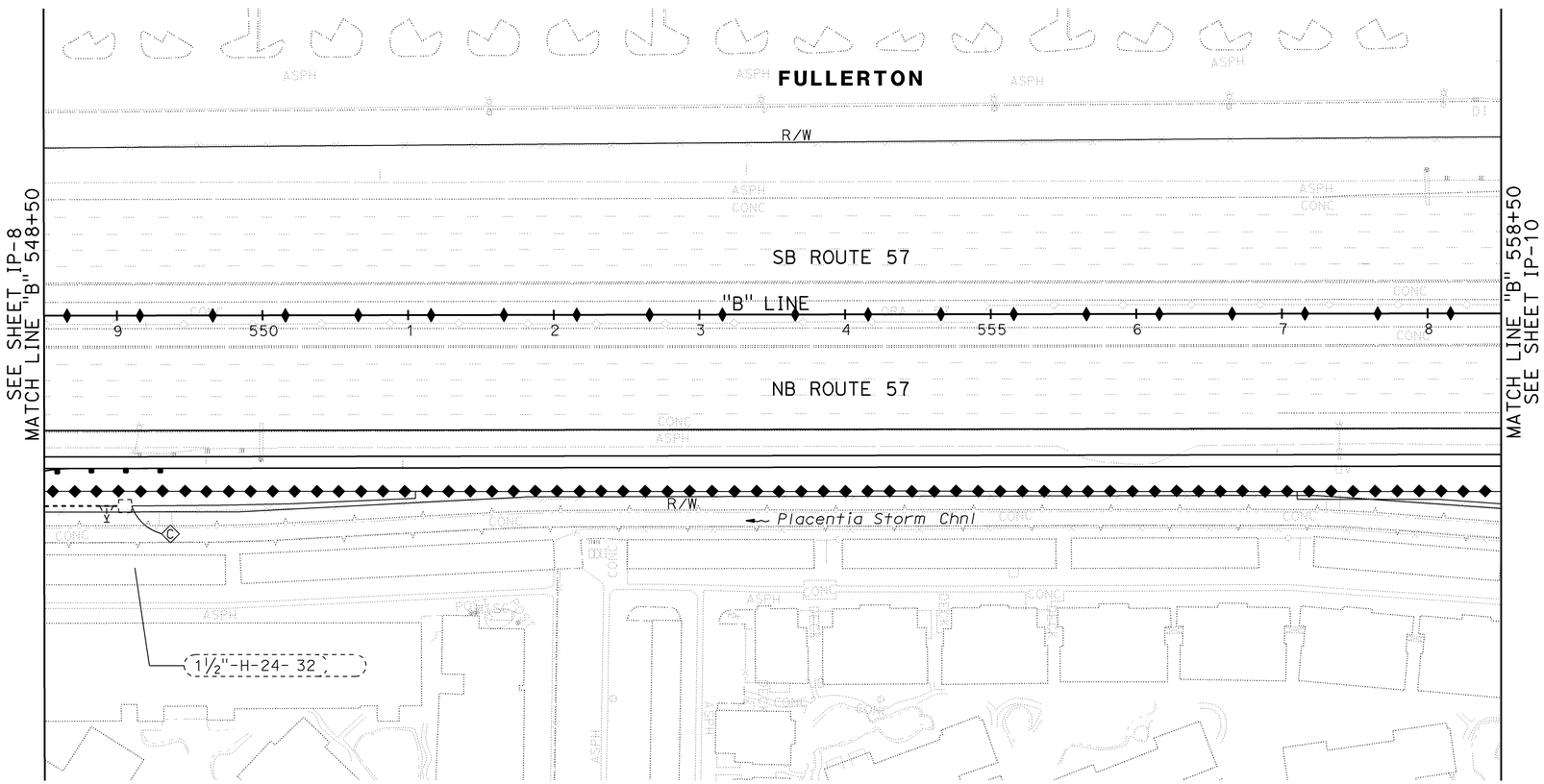

IRRIGATION PLAN

SCALE 1" = 50'

THIS PLAN ACCURATE FOR IRRIGATION WORK ONLY.

IP-9

STATE OF CALIFORNIA - DEPARTMENT OF TRANSPORTATION
Caltrans

CONSULTANT SENIOR LANDSCAPE ARCHITECT: JOHN P. ANDREW
CALCULATED-DESIGNED BY: NIKI WU
CHECKED BY: CATHY L. JOHNSON
REVISED BY
DATE REVISED

H:\pdata\10105878\Admin\submittals\2009-07-15 FINAL Electronic-Only Submittal\DGN\c0F031I009.dgn
PLOT File: 21-DEC-2009 09:30 FINAL SUBMITTAL\c0F031I009.dgn

LAST REVISION 00-00-00 | DATE PLOTTED => 21-DEC-2009 | TIME PLOTTED => 09:30

BORDER LAST REVISED 4/11/2008 | RELATIVE BORDER SCALE IS IN INCHES 0 1 2 3 | USERNAME => trmikesl | DGN FILE => c0F031I009.dgn | CU 12220 | EA 0F0311

Dist	COUNTY	ROUTE	POST MILES TOTAL PROJECT	SHEET No.	TOTAL SHEETS
12	Ora	57	16.2/18.6	555	960

LICENSED LANDSCAPE ARCHITECT

12-14-09
PLANS APPROVAL DATE

LICENSED LANDSCAPE ARCHITECT — CATHY L. JOHNSON No. 4246 — Expiration Date 01-31-10 — Renewal Date 07-15-09 Date — STATE OF CALIFORNIA

THE STATE OF CALIFORNIA OR ITS OFFICERS OR AGENTS SHALL NOT BE RESPONSIBLE FOR THE ACCURACY OR COMPLETENESS OF SCANNED COPIES OF THIS PLAN SHEET.

RBF CONSULTING
14725 ALTON PKWY
IRVINE, CA 92618

ORANGE COUNTY
TRANSPORTATION AUTHORITY
550 SOUTH MAIN STREET
ORANGE, CA 92863

NOTE:

FOR ACCURATE RIGHT OF WAY AND ACCESS DATA,
CONTACT RIGHT OF WAY ENGINEERING AT THE DISTRICT OFFICE.

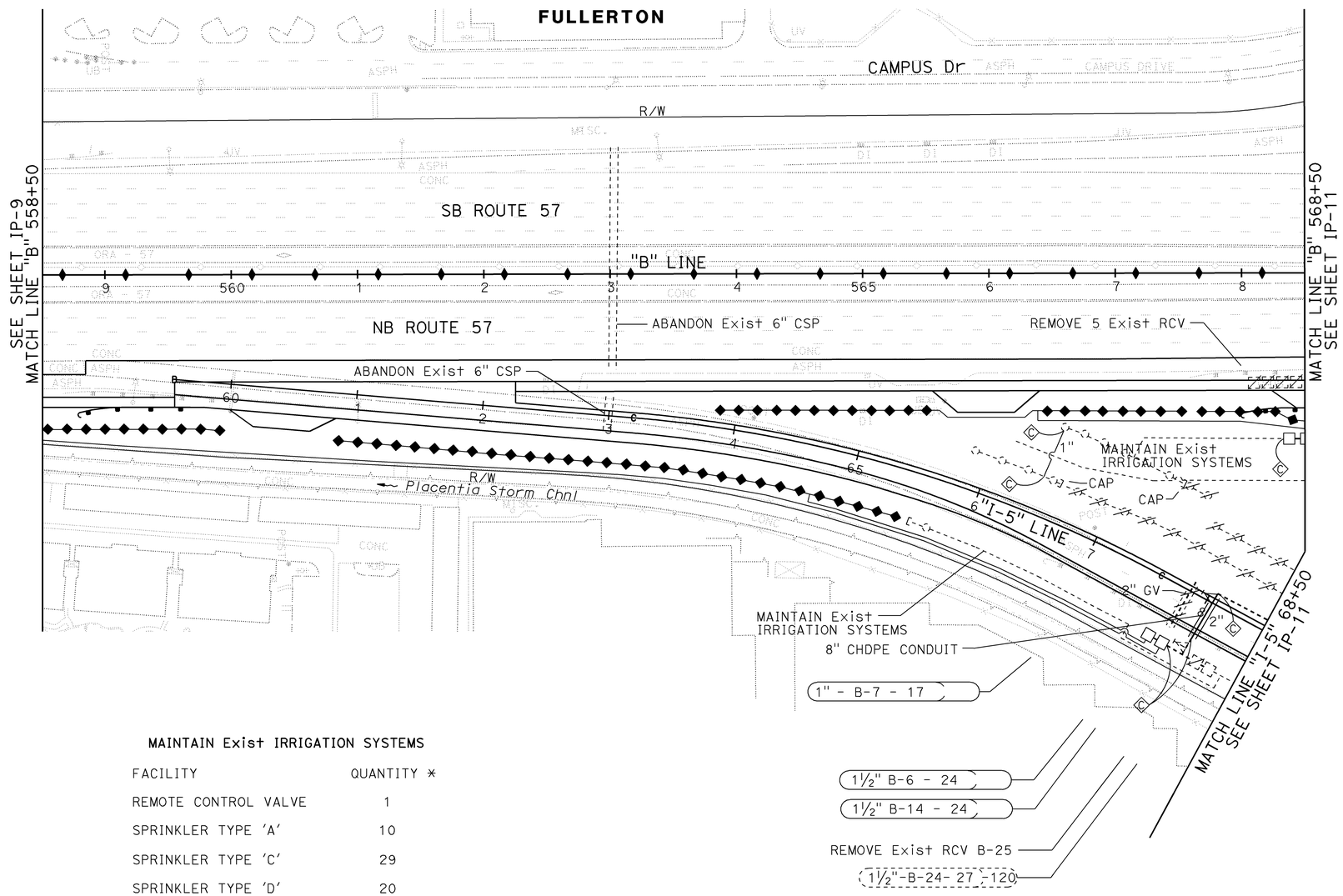

MAINTAIN Exist IRRIGATION SYSTEMS

FACILITY	QUANTITY *
REMOTE CONTROL VALVE	1
SPRINKLER TYPE 'A'	10
SPRINKLER TYPE 'C'	29
SPRINKLER TYPE 'D'	20

* THIS SHEET ONLY

THIS PLAN ACCURATE FOR IRRIGATION WORK ONLY.

IRRIGATION PLAN

SCALE 1" = 50'

IP-10

STATE OF CALIFORNIA - DEPARTMENT OF TRANSPORTATION

CONSULTANT SENIOR LANDSCAPE ARCHITECT: JOHN P. ANDREW

CALCULATED-DESIGNED BY: NIKI WU

CHECKED BY: CATHY L. JOHNSON

REVISED BY / DATE REVISED

H:\pdata\10105878\Admin\submittals\2009-07-15 FINAL Electronic-Only Submittal\DGN\mikes3PLOT File21-DEC-2009 09:30 SUBMITTAL\c0F031I010.dgn

LAST REVISION 00-00-00 | DATE PLOTTED => 21-DEC-2009 | TIME PLOTTED => 09:30

BORDER LAST REVISED 4/11/2008 | RELATIVE BORDER SCALE IS IN INCHES 0 1 2 3 | USERNAME => trmikesl | DGN FILE => c0F031I010.dgn | CU 12220 | EA 0F0311

NOTE:

FOR ACCURATE RIGHT OF WAY AND ACCESS DATA, CONTACT RIGHT OF WAY ENGINEERING AT THE DISTRICT OFFICE.

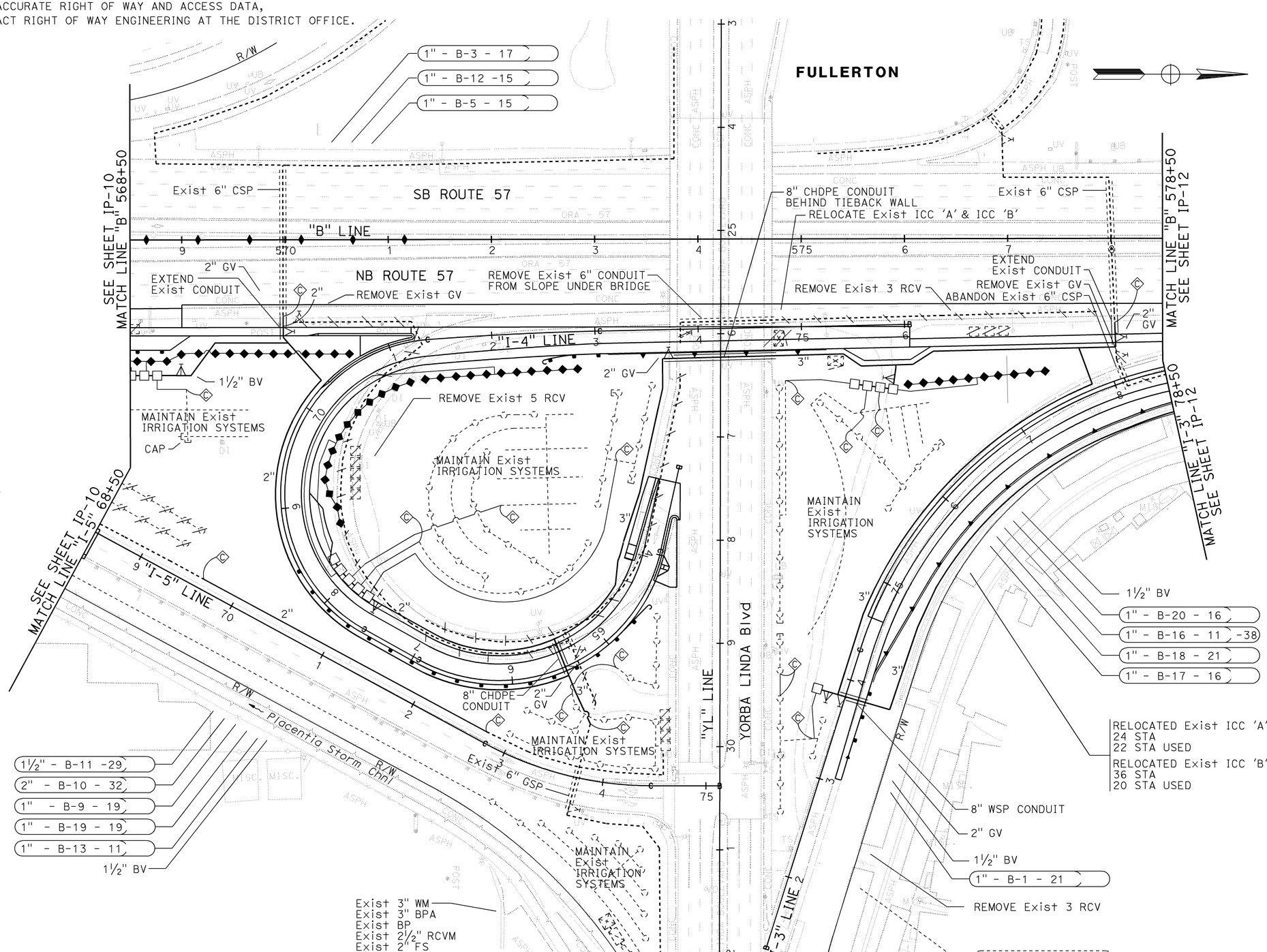

Dist	COUNTY	ROUTE	POST MILES TOTAL PROJECT	SHEET No.	TOTAL SHEETS
12	Ora	57	16.2/18.6	556	960

LICENSED LANDSCAPE ARCHITECT

12-14-09
PLANS APPROVAL DATE

LICENSED LANDSCAPE ARCHITECT — CATHY L. JOHNSON No. 4242 — Expires 01-31-10 Renewal Date — 07-15-09 Date — STATE OF CALIFORNIA

THE STATE OF CALIFORNIA OR ITS OFFICERS OR AGENTS SHALL NOT BE RESPONSIBLE FOR THE ACCURACY OR COMPLETENESS OF SCANNED COPIES OF THIS PLAN SHEET.

RBF CONSULTING
14725 ALTON PKWY
IRVINE, CA 92618

ORANGE COUNTY TRANSPORTATION AUTHORITY
550 SOUTH MAIN STREET
ORANGE, CA 92863

MAINTAIN Exist IRRIGATION SYSTEMS

FACILITY	QUANTITY *
REMOTE CONTROL VALVE	1
SPRINKLER TYPE 'A'	73
SPRINKLER TYPE 'C'	54
SPRINKLER TYPE 'D'	75

* THIS SHEET ONLY

IRRIGATION PLAN

SCALE 1" = 50'

IP-11

THIS PLAN ACCURATE FOR IRRIGATION WORK ONLY.

STATE OF CALIFORNIA - DEPARTMENT OF TRANSPORTATION

Caltrans

CONSULTANT SENIOR LANDSCAPE ARCHITECT: JOHN P. ANDREW

CALCULATED-DESIGNED BY: NIKI WU

CHECKED BY: CATHY L. JOHNSON

REVISED BY / DATE REVISED

H:\pdata\10105878\Admin\submittals\2009-07-15 FINAL Electronic-Only Submittal\DGN rarikes3PLOT File21-DEC-2009 09:30 FINAL SUBMITTAL\c0F0311011.dgn

LAST REVISION 00-00-00 | DATE PLOTTED => 21-DEC-2009 | TIME PLOTTED => 09:30

BORDER LAST REVISED 4/11/2008 | RELATIVE BORDER SCALE IS IN INCHES 0 1 2 3 | USERNAME => trmikes1 | DGN FILE => c0F0311011.dgn | CU 12220 | EA 0F0311

Dist	COUNTY	ROUTE	POST MILES TOTAL PROJECT	SHEET No.	TOTAL SHEETS
12	Ora	57	16.2/18.6	557	960

LICENSED LANDSCAPE ARCHITECT

12-14-09
PLANS APPROVAL DATE

LICENSED LANDSCAPE ARCHITECT
CATHY L. JOHNSON No. 4245
Expiration Date 01-31-10
Renewal Date 07-15-09
Date
STATE OF CALIFORNIA

THE STATE OF CALIFORNIA OR ITS OFFICERS OR AGENTS SHALL NOT BE RESPONSIBLE FOR THE ACCURACY OR COMPLETENESS OF SCANNED COPIES OF THIS PLAN SHEET.

RBF CONSULTING
14725 ALTON PKWY
IRVINE, CA 92618

ORANGE COUNTY
TRANSPORTATION AUTHORITY
550 SOUTH MAIN STREET
ORANGE, CA 92863

NOTE:

FOR ACCURATE RIGHT OF WAY AND ACCESS DATA,
CONTACT RIGHT OF WAY ENGINEERING AT THE DISTRICT OFFICE.

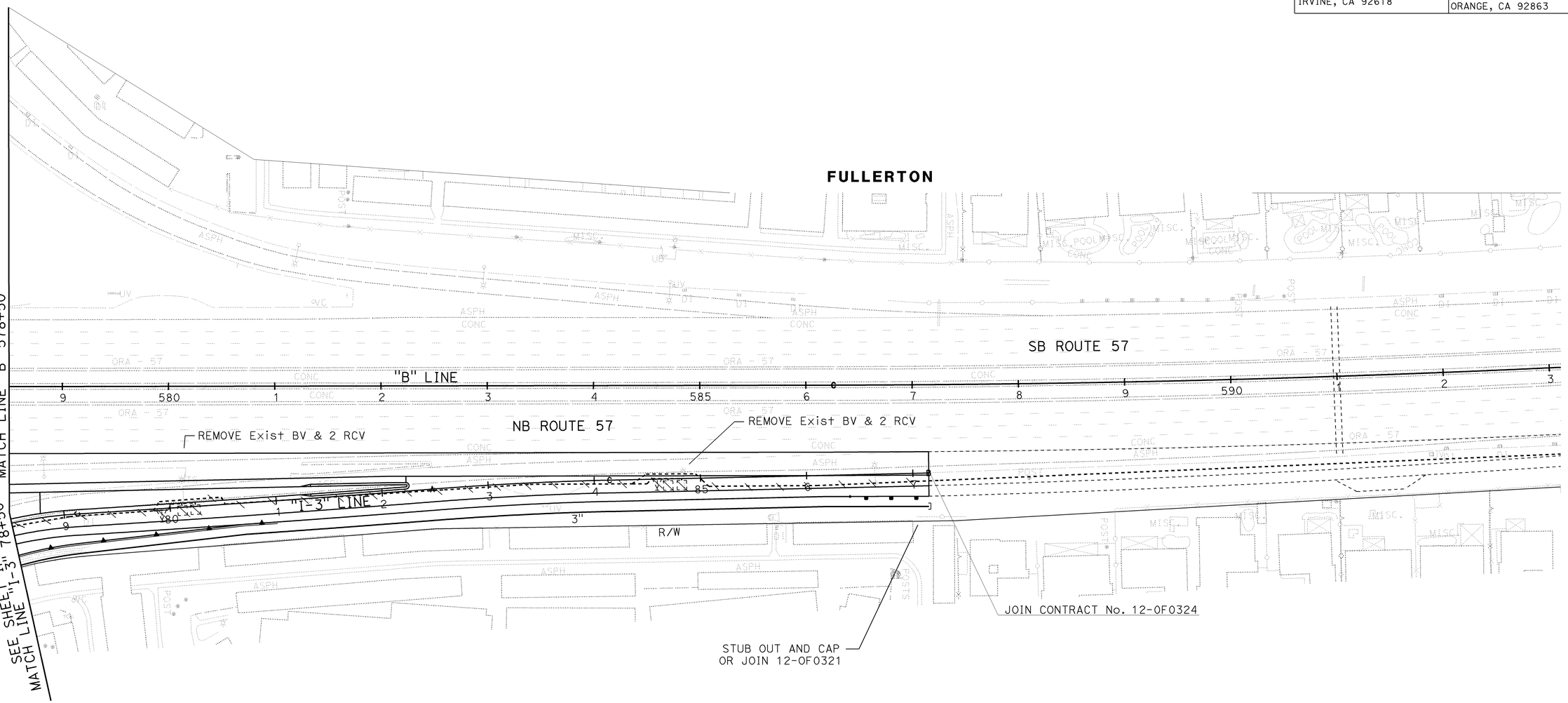

IRRIGATION PLAN

SCALE 1" = 50'

THIS PLAN ACCURATE FOR IRRIGATION WORK ONLY.

IP-12

STATE OF CALIFORNIA - DEPARTMENT OF TRANSPORTATION
Caltrans
CONSULTANT SENIOR LANDSCAPE ARCHITECT: JOHN P. ANDREW
CALCULATED-DESIGNED BY: NIKI WU
CHECKED BY: CATHY L. JOHNSON
REVISED BY / DATE REVISED

LAST REVISION 00-00-00
DATE PLOTTED => 21-DEC-2009
TIME PLOTTED => 09:30

H:\pdata\10105878\Admin\submittals\2009-07-15 FINAL Electronic-Only Submittal\DGN files\PLOT Files\2009-07-15 FINAL SUBMITTAL\c0F031I012.dgn

BORDER LAST REVISED 4/11/2008
RELATIVE BORDER SCALE IS IN INCHES 0 1 2 3
USERNAME => trmikesl
DGN FILE => c0F031I012.dgn
CU 12220
EA 0F0311

Dist	COUNTY	ROUTE	POST MILES TOTAL PROJECT	SHEET No.	TOTAL SHEETS
12	Ora	57	16.2/18.6	558	960

LICENSED LANDSCAPE ARCHITECT

12-14-09
PLANS APPROVAL DATE

LICENSED LANDSCAPE ARCHITECT — CATHY L. JOHNSON No. 4246 — Expiration Date 01-31-10 — Renewal Date 07-15-09 — Date — STATE OF CALIFORNIA

THE STATE OF CALIFORNIA OR ITS OFFICERS OR AGENTS SHALL NOT BE RESPONSIBLE FOR THE ACCURACY OR COMPLETENESS OF SCANNED COPIES OF THIS PLAN SHEET.

RBF CONSULTING
14725 ALTON PKWY
IRVINE, CA 92618

ORANGE COUNTY
TRANSPORTATION AUTHORITY
550 SOUTH MAIN STREET
ORANGE, CA 92863

SPRINKLER SCHEDULE

SYMBOL	TYPE	DESCRIPTION	SPRAY PATTERN	OPERATING PRESSURE (PSI)	PRESSURE COMPENSATING	PLUS/MINUS 5% ② DISCHARGE: GALLONS PER MINUTE (GPM)	DISCHARGE: GALLONS PER HOUR (GPH)	RADIUS (Ft)	WIDTH × LENGTH (Ft)	MATERIAL	INLET CONNECTION (NPT INCH)	POSITIVE-LOCKING ADJ ARC STOP	BACKSPLASH PREVENTER	DIFFUSER PIN	DISTANCE CONTROL FLAP	ADJ DISCHARGE	RISER: TYPE	RISER MATERIAL: PLASTIC	RISER MATERIAL: GALVANIZED	RISER: SIZE (IPS INCH)	RISER: HEIGHT (INCH)	RISER: FLOW SHUTOFF DEVICE	SWING JOINT (TYPE)	RISER SUPPORT	SPRINKLER PROTECTOR (TYPE)	REMARKS
◆	B-6	STREAM SPRAY	F	30	-	1.6	-	16	-	PL	0.5	-	-	-	-	-	VI	X	-	-	-	-	-	-	-	12 INCH POP-UP
◆	B-6	STREAM SPRAY	H	30	-	0.8	-	16	-	PL	0.5	-	-	-	-	-	VI	X	-	-	-	-	-	-	-	12 INCH POP-UP

X IN BOX DENOTES REQUIREMENT

APPLICABLE WHEN CIRCLED BELOW:

1 - See Special Provisions.
2 - If a pressure compensating device is specified, the discharge and radii shown reflect its use.
3 - Arc Stop shall be fitted with a nut and bolt.
4 - Vinyl-coated cast iron housing.
5 - Swing Joints required adjacent to shoulders, curbs, sidewalks, and dikes.
6 - Unless otherwise shown on plans.

ABBREVIATIONS

F — full circle
P — part circle
F/P — full/part circle
Q — quarter circle
T — third circle
H — half circle
TT — two third circle
TQ — three quarter circle
CST — center strip
SST — side strip
EST — end strip
Ft — feet/foot
GPM — gallons per minute
GPH — gallons per hour
Adj — adjustable
PL — plastic
B/B — brass/bronze
B/PL — brass/plastic
B/B/PL — brass/bronze/plastic
NPT — national pipe thread
IPS — iron pipe size
PSI — pounds per square inch

IRRIGATION CROSSOVERS

LOCATION: LINE	LOCATION: STATION	SIDE: R†	SIDE: L†	CONDUIT TYPE ③ WSP: SIZE (INCH) 8	SIZE (INCH) 8	LENGTH (LF)	(N) WATER LINE CROSSOVER SIZE (INCH)	(N) SPRINKLER CONTROL CROSSOVER SIZE (INCH)
T	68+70	-	-	54	-		3	2
G-3	16+75	-	-	56	-		3	2
H-8	38+10	-	-	42	-		3	2
I-5	68+05	-	-	42	-		3	2
I-4	65+40	-	-	32	-		3	2
*** B	573+65	-	-	110	-		3	2
I-3	73+75	-	-	-	30		3	2
TOTAL				336	30			

(N) - NOT A SEPARATE PAY ITEM FOR INFORMATION ONLY
X - DENOTES REQUIREMENT

*** - BEHIND TIEBACK WALL

CONDUIT TYPE

(Applicable when circled below and shown under the 'CONDUIT TYPE' column heading)

1 BITUMINOUS COATED CORRUGATED STEEL PIPE (0.064 INCH THICK)
2 CORRUGATED STEEL PIPE (0.064 INCH THICK)
③ CORRUGATED HIGH DENSITY POLYETHYLENE PIPE
4 ALTERNATIVE CONDUIT

EXTEND IRRIGATION CROSSOVERS

LOCATION: LINE	LOCATION: STATION	SIDE: R†	SIDE: L†	EXTEND CONDUIT SIZE (INCH) 8	SIZE (INCH) -	LENGTH (LF)	CB	OL	(N) WATER LINE CROSSOVER SIZE (INCH)	(N) SPRINKLER CONTROL CROSSOVER SIZE (INCH)
* OT	38+80	X	-	26	-		-	X	3	2
* OT	38+80	-	X	26	-		-	X	3	2
** B	488+00	X	-	26	-		-	X	3	2
** B	493+15	X	-	26	-		-	X	3	2
B	570+00	X	-	26	-		-	X	3	2
B	578+00	X	-	26	-		-	X	3	2
TOTAL				156						

(N) - NOT A SEPARATE PAY ITEM FOR INFORMATION ONLY
X - DENOTES REQUIREMENT

CB - COUPLING BAND
OL - OVERLAP

* - PLACE UNDER SLOPE PAVING
** - UTILITY OPENING IN WALL

LANDSCAPE DETAILS
(SPRINKLER SCHEDULE)

NO SCALE

LD-1

V:\Project+Plans\PSEWorking\d12\12-0F0311-redlines\c0F031tn001.dgn

STATE OF CALIFORNIA - DEPARTMENT OF TRANSPORTATION

Caltrans

JOHN P. ANDREW — CONSULTANT SENIOR LANDSCAPE ARCHITECT

CATHY L. JOHNSON — CALCULATED-DESIGNED BY

NIKI WU — CHECKED BY

REVISED BY — DATE REVISED

21-DEC-2009 09:30 trmikesl

LAST REVISION 00-00-00 | DATE PLOTTED => 21-DEC-2009 | TIME PLOTTED => 09:30

Dist	COUNTY	ROUTE	POST MILES TOTAL PROJECT	SHEET No.	TOTAL SHEETS
12	Ora	57	16.2/18.6	559	960

LICENSED LANDSCAPE ARCHITECT

12-14-09
PLANS APPROVAL DATE

LICENSED LANDSCAPE ARCHITECT
CATHY L. JOHNSON No. 4246
Expiration Date 01-31-10
Renewal Date 07-15-09
Date
STATE OF CALIFORNIA

THE STATE OF CALIFORNIA OR ITS OFFICERS OR AGENTS SHALL NOT BE RESPONSIBLE FOR THE ACCURACY OR COMPLETENESS OF SCANNED COPIES OF THIS PLAN SHEET.

RBF CONSULTING
14725 ALTON PKWY
IRVINE, CA 92618

ORANGE COUNTY
TRANSPORTATION AUTHORITY
550 SOUTH MAIN STREET
ORANGE, CA 92863

LEGEND

SYMBOL	PANEL IMAGE	QUANTITY
P	CALIFORNIA POPPY (ORANGE FLOWER)	66
M	MATILIJA POPPY (WHITE FLOWER)	112
B	HARVEST BRODIAEA (BLUE FLOWER)	23

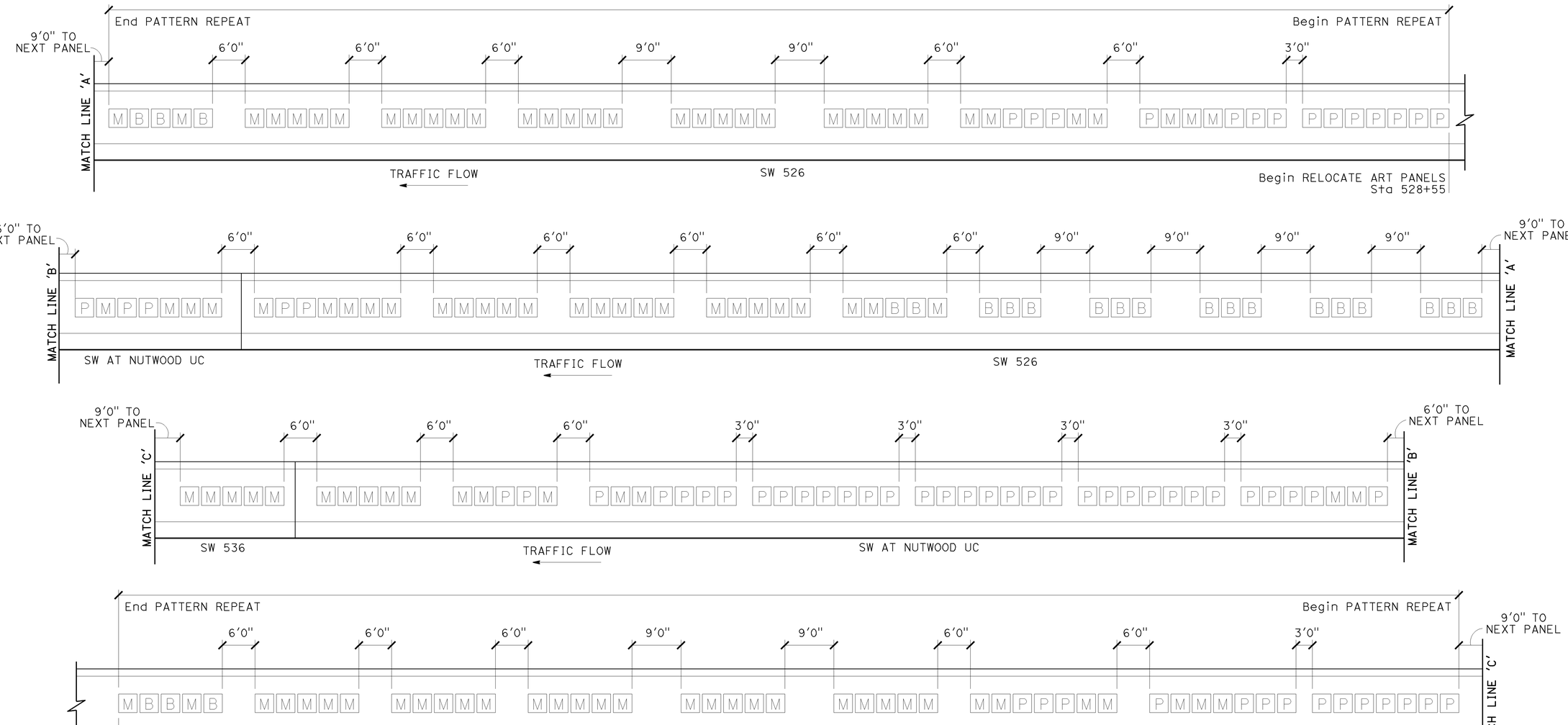

ART PANEL PATTERN LAYOUT

LANDSCAPE DETAILS
(RELOCATE ART PANELS)

NO SCALE

LD-2

STATE OF CALIFORNIA - DEPARTMENT OF TRANSPORTATION
Caltrans

CONSULTANT SENIOR LANDSCAPE ARCHITECT: JOHN P. ANDREW
CALCULATED-DESIGNED BY: CATHY L. JOHNSON
CHECKED BY: NIKI WU
REVISED BY
DATE REVISED

H:\pdata\10105878\Admin\submittals\2009-07-15 FINAL Electronic-Only Submittal\DGN rainbes3PLOT File21-DEC-2009 09:30 SUBMITTAL\c0F0311tn002.dgn

LAST REVISION 00-00-00
DATE PLOTTED => 21-DEC-2009
TIME PLOTTED => 09:30

Dist	COUNTY	ROUTE	POST MILES TOTAL PROJECT	SHEET No.	TOTAL SHEETS
12	Ora	57	16.2/18.6	560	960

REGISTERED CIVIL ENGINEER 7/15/09 DATE

12-14-09
PLANS APPROVAL DATE

REGISTERED PROFESSIONAL ENGINEER ARMANDO SOLIS No. 72012 Exp. 6-30-10 CIVIL STATE OF CALIFORNIA

THE STATE OF CALIFORNIA OR ITS OFFICERS OR AGENTS SHALL NOT BE RESPONSIBLE FOR THE ACCURACY OR COMPLETENESS OF SCANNED COPIES OF THIS PLAN SHEET.

RBF CONSULTING
14275 ALTON PKWY
IRVINE, CA 92618

OCTA
550 S. MAIN STREET
ORANGE, CA 92863

NOTES:

1. FOR ACCURATE RIGHT OF WAY DATA, CONTACT RIGHT OF WAY ENGINEERING AT THE DISTRICT OFFICE.
2. TEMPORARY PULL BOXES SHALL BE No. 5 AND SET ABOVE GROUND, WHEN CONDITIONS REQUIRE IN WORK AREA UNLESS OTHERWISE NOTED.

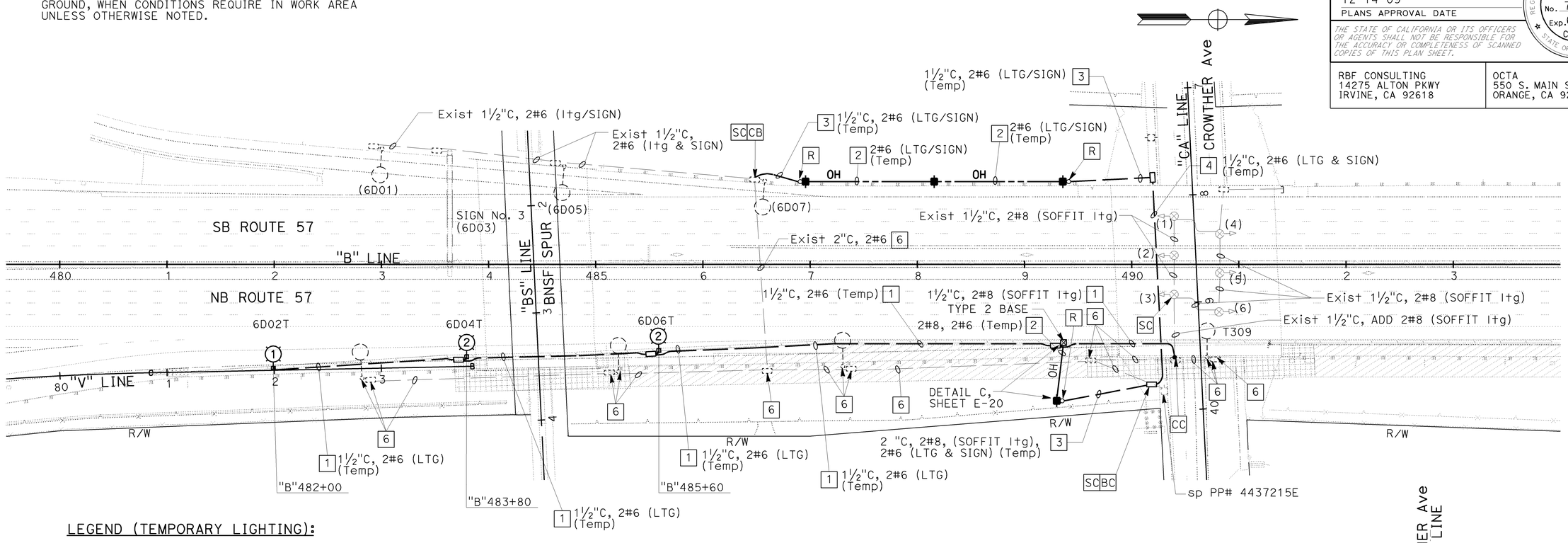

LEGEND (TEMPORARY LIGHTING):

- (1) INSTALL TEMPORARY MODIFIED TYPE 21 POLE WITH 6' LMA ON TEMPORARY LIGHTING BASE (TYPE 1) SEE DETAIL SHEET E-17
- (2) INSTALL TEMPORARY MODIFIED TYPE 21 POLE WITH 6' LMA ON TEMPORARY LIGHTING BASE (TYPE 2) SEE DETAIL SHEET E-18
- INSTALL TEMPORARY MODIFIED TYPE 21 POLE (NO LMA) ON TEMPORARY BASE AS SHOWN. SEE DETAIL SHEET E-17 OR E-18
- INSTALL TEMPORARY WOOD POLE
- (6D01) EXISTING LIGHTING IDENTIFICATION NUMBER
- 6D01T TEMPORARY LIGHTING IDENTIFICATION NUMBER
- [1] INSTALL TEMPORARY CONDUIT ALONG BACK OF TEMPORARY RAILING (TYPE K) PER DETAIL A, SHEET E-19
- [2] INSTALL TEMPORARY OVERHEAD CONDUCTORS
- [3] INSTALL TEMPORARY CONDUIT AND CONDUCTORS (TRENCHING METHOD)
- [4] INSTALL TEMPORARY CONDUIT AND CONDUCTORS (JACK AND BORE METHOD)
- [5] SEE FINAL LIGHTING AND SIGN ILLUMINATION PLANS FOR INSTALLATION OF NEW LIGHTING AND SIGN ILLUMINATION SYSTEM
- [6] SEE FINAL LIGHTING AND SIGN ILLUMINATION PLANS FOR DISPOSITION OF EXISTING LIGHTING AND SIGN ILLUMINATION EQUIPMENT

CIRCUIT DIAGRAM LEGEND:

- = EXISTING 310 W HPS
- = TEMPORARY 310 W HPS
- = EXISTING CONDUIT AND CONDUCTORS
- = TEMPORARY CONDUIT AND CONDUCTORS
- = EXISTING CONDUIT AND CONDUCTORS TO BE ABANDONED
- = EXISTING SPLICE
- = SPLICE
- = EXISTING OVERHEAD SIGN
- 6B02T= IDENTIFICATION NUMBER (TEMPORARY)
- (6B01)= IDENTIFICATION NUMBER (EXISTING)
- (A) = OVERHEAD SIGN IDENTIFICATION

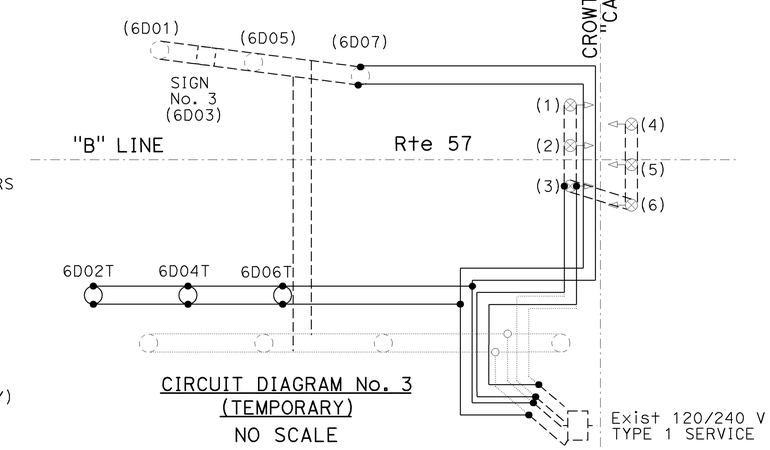

CIRCUIT DIAGRAM No. 3 (TEMPORARY)
NO SCALE

LIGHTING (STAGE CONSTRUCTION)
STAGE 1A

SCALE: 1" = 50'

THIS PLAN IS ACCURATE FOR ELECTRICAL WORK ONLY.

E-1

STATE OF CALIFORNIA - DEPARTMENT OF TRANSPORTATION
Caltrans
CONSULTANT FUNCTIONAL SUPERVISOR: MARK J. ESPOSITO
CALCULATED-DESIGNED BY: ARMANDO SOLIS
CHECKED BY: GARY TOLMIE
REVISED BY / DATE REVISED
H:\pdata\10105878\Admin\submittals\2009-06-29 FINAL Submittal\100% ELECTRONIC SUBMITTAL - MERGED01.DGN
LAST REVISION 08-01-08
DATE PLOTTED => 21-DEC-2009
TIME PLOTTED => 10:28

Dist	COUNTY	ROUTE	POST MILES TOTAL PROJECT	SHEET No.	TOTAL SHEETS
12	Ora	57	16.2/18.6	561	960

REGISTERED CIVIL ENGINEER 7/15/09 DATE

12-14-09
PLANS APPROVAL DATE

REGISTERED PROFESSIONAL ENGINEER ARMANDO SOLIS No. 72012 Exp. 6-30-10 CIVIL STATE OF CALIFORNIA

THE STATE OF CALIFORNIA OR ITS OFFICERS OR AGENTS SHALL NOT BE RESPONSIBLE FOR THE ACCURACY OR COMPLETENESS OF SCANNED COPIES OF THIS PLAN SHEET.

RBF CONSULTING
14275 ALTON PKWY
IRVINE, CA 92618

OCTA
550 S. MAIN STREET
ORANGE, CA 92863

NOTES (THIS SHEET):

1. FOR NOTES, LIGHTING STAGE CONSTRUCTION LEGEND, AND CIRCUIT DIAGRAM LEGEND SEE SHEET E-1.
2. FOR ACCURATE RIGHT OF WAY DATA, CONTACT RIGHT OF WAY ENGINEERING AT THE DISTRICT OFFICE.

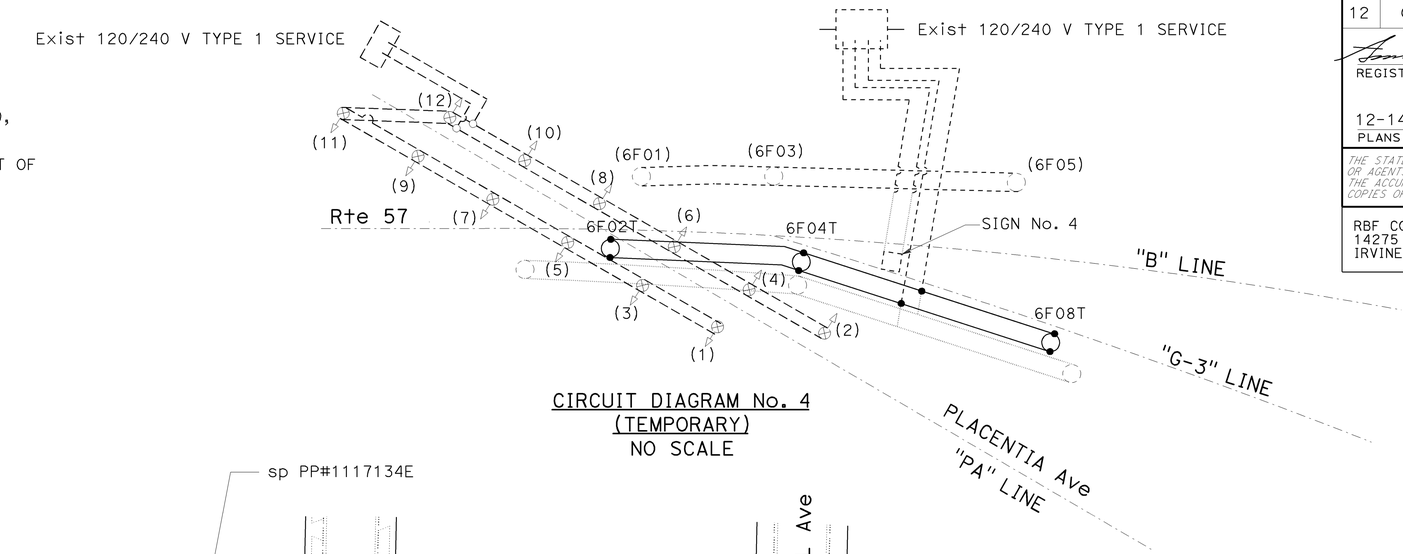

CIRCUIT DIAGRAM No. 4
(TEMPORARY)
NO SCALE

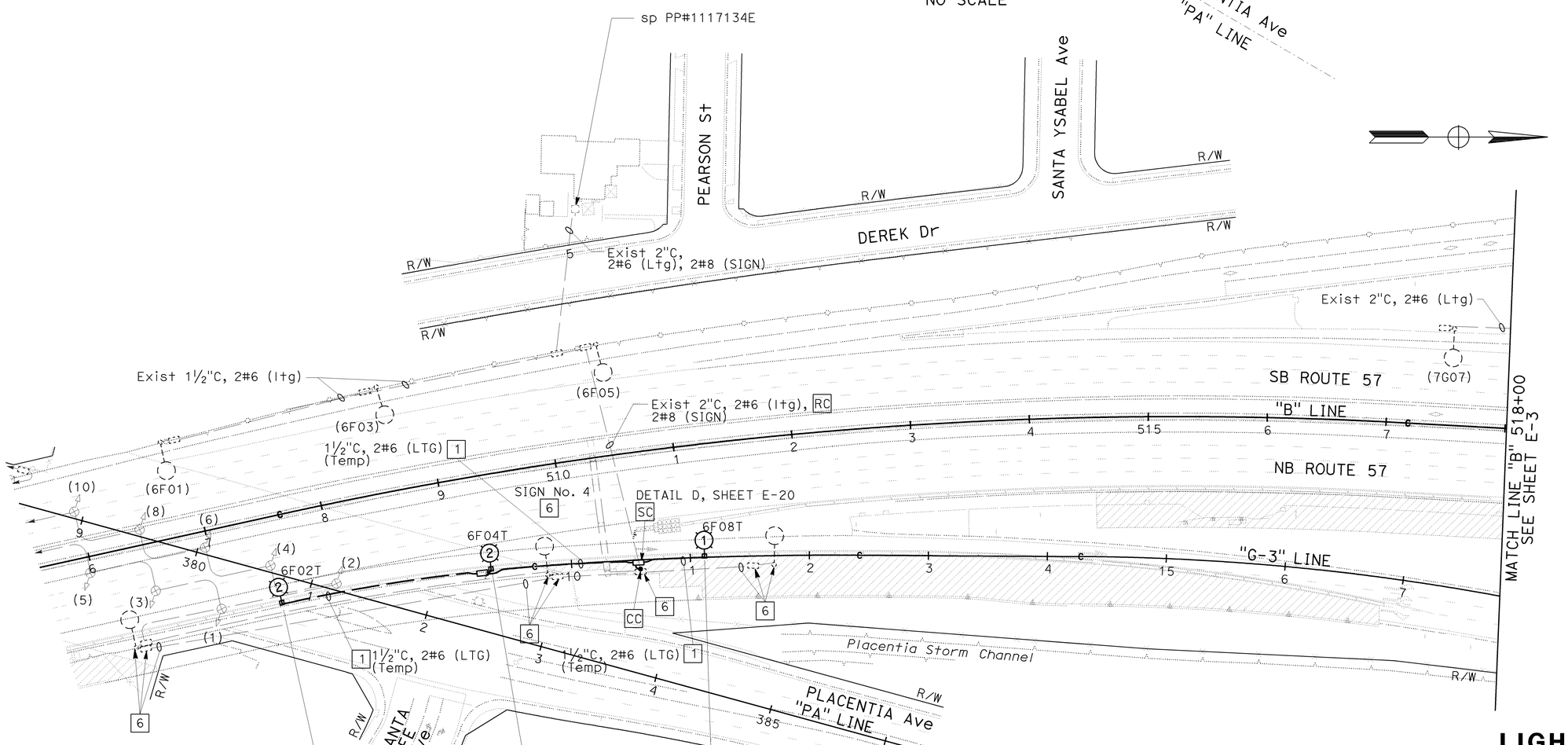

LIGHTING
(STAGE CONSTRUCTION)
STAGE 1A

SCALE: 1" = 50'

E-2

THIS PLAN IS ACCURATE FOR ELECTRICAL WORK ONLY.

STATE OF CALIFORNIA - DEPARTMENT OF TRANSPORTATION
Caltrans
CONSULTANT FUNCTIONAL SUPERVISOR: MARK J. ESPOSITO
CALCULATED-DESIGNED BY: GARY TOLMIE
CHECKED BY: ARMANDO SOLIS
REVISED BY / DATE REVISED

LAST REVISION 08-01-08
DATE PLOTTED => 21-DEC-2009
TIME PLOTTED => 10:28

H:\pdata\10105878\Admin\submittals\2009-06-29 FINAL Submittal\100% ELECTRONIC SUBMITTAL - MERGED01-FDEES2009BYNDT28\traffic\c0F031ua002.dgn

BORDER LAST REVISED 4/11/2008
RELATIVE BORDER SCALE IS IN INCHES 0 1 2 3
USERNAME => s135318
DGN FILE => c0F031ua002.dgn
CU 12220
EA 0F0311

Dist	COUNTY	ROUTE	POST MILES TOTAL PROJECT	SHEET No.	TOTAL SHEETS
12	Ora	57	16.2/18.6	562	960

REGISTERED CIVIL ENGINEER 7/15/09 DATE

12-14-09
PLANS APPROVAL DATE

REGISTERED PROFESSIONAL ENGINEER ARMANDO SOLIS No. 72012 Exp. 6-30-10 CIVIL STATE OF CALIFORNIA

THE STATE OF CALIFORNIA OR ITS OFFICERS OR AGENTS SHALL NOT BE RESPONSIBLE FOR THE ACCURACY OR COMPLETENESS OF SCANNED COPIES OF THIS PLAN SHEET.

RBF CONSULTING
14275 ALTON PKWY
IRVINE, CA 92618

OCTA
550 S. MAIN STREET
ORANGE, CA 92863

NOTES (THIS SHEET):

1. FOR NOTES, LIGHTING STAGE CONSTRUCTION LEGEND, AND CIRCUIT DIAGRAM LEGEND SEE SHEET E-1.
2. FOR ACCURATE RIGHT OF WAY DATA, CONTACT RIGHT OF WAY ENGINEERING AT THE DISTRICT OFFICE.

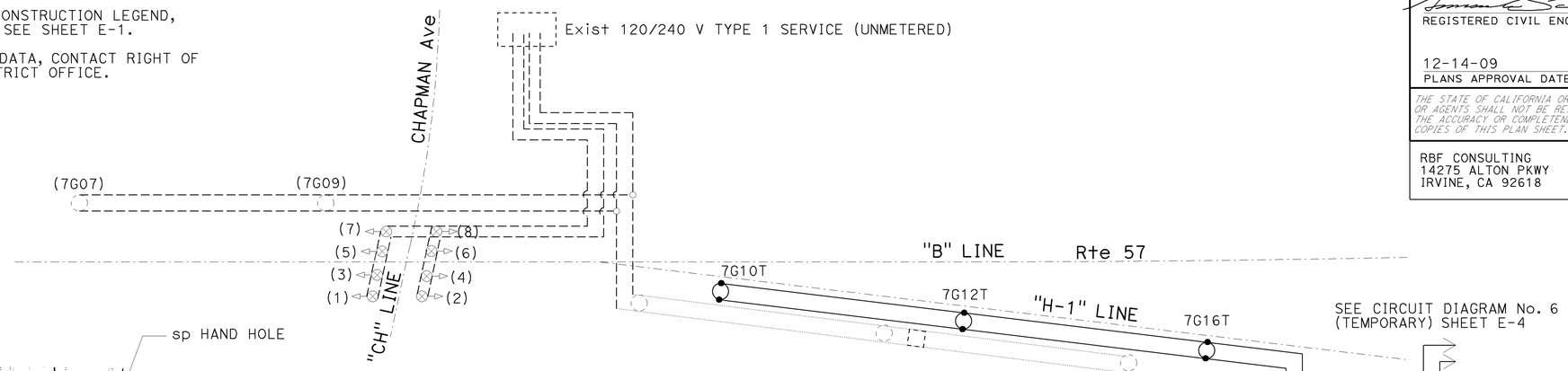

CIRCUIT DIAGRAM No. 5
(TEMPORARY)
NO SCALE

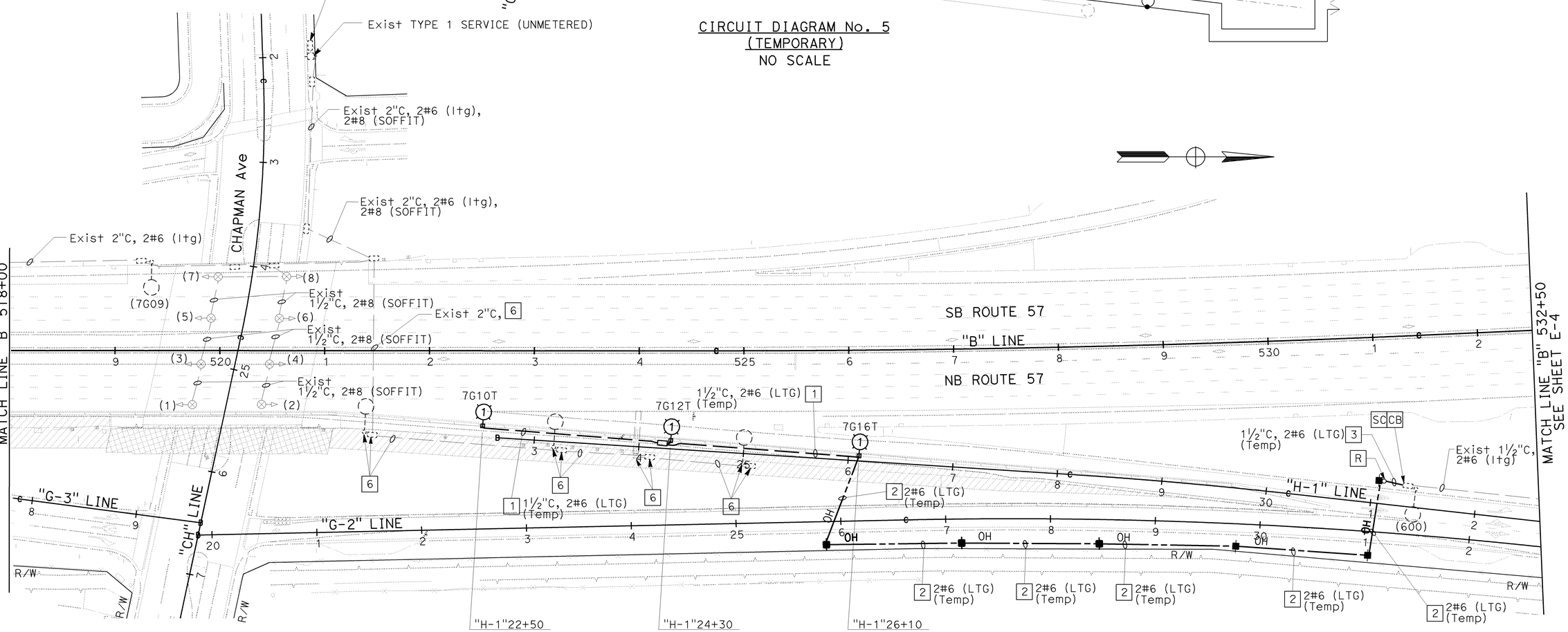

LIGHTING (STAGE CONSTRUCTION)
STAGE 1A

SCALE: 1" = 50'

E-3

THIS PLAN IS ACCURATE FOR ELECTRICAL WORK ONLY.

STATE OF CALIFORNIA - DEPARTMENT OF TRANSPORTATION

CONSULTANT FUNCTIONAL SUPERVISOR: MARK J. ESPOSITO

CALCULATED-DESIGNED BY: GARY TOLMIE

CHECKED BY: ARMANDO SOLIS

REVISED BY / DATE REVISED

LAST REVISION 08-01-08

DATE PLOTTED => 21-DEC-2009
TIME PLOTTED => 10:28

H:\pdata\10105878\Admin\submittals\2009-06-29 FINAL Submittal\100% ELECTRONIC SUBMITTAL - MERGED01-FDEES2009BYNTraffic\c0F031ua003.dgn

BORDER LAST REVISED 4/11/2008

RELATIVE BORDER SCALE IS IN INCHES 0 1 2 3

USERNAME => s135318
DGN FILE => c0F031ua003.dgn

CU 12220

EA 0F0311

Dist	COUNTY	ROUTE	POST MILES TOTAL PROJECT	SHEET No.	TOTAL SHEETS
12	Ora	57	16.2/18.6	563	960

REGISTERED CIVIL ENGINEER 7/15/09 DATE

12-14-09
PLANS APPROVAL DATE

REGISTERED PROFESSIONAL ENGINEER ARMANDO SOLIS No. 72012 Exp. 6-30-10 CIVIL STATE OF CALIFORNIA

THE STATE OF CALIFORNIA OR ITS OFFICERS OR AGENTS SHALL NOT BE RESPONSIBLE FOR THE ACCURACY OR COMPLETENESS OF SCANNED COPIES OF THIS PLAN SHEET.

RBF CONSULTING
14275 ALTON PKWY
IRVINE, CA 92618

OCTA
550 S. MAIN STREET
ORANGE, CA 92863

NOTES (THIS SHEET):

1. FOR NOTES, LIGHTING STAGE CONSTRUCTION LEGEND, AND CIRCUIT DIAGRAM LEGEND SEE SHEET E-1.
2. FOR ACCURATE RIGHT OF WAY DATA, CONTACT RIGHT OF WAY ENGINEERING AT THE DISTRICT OFFICE.

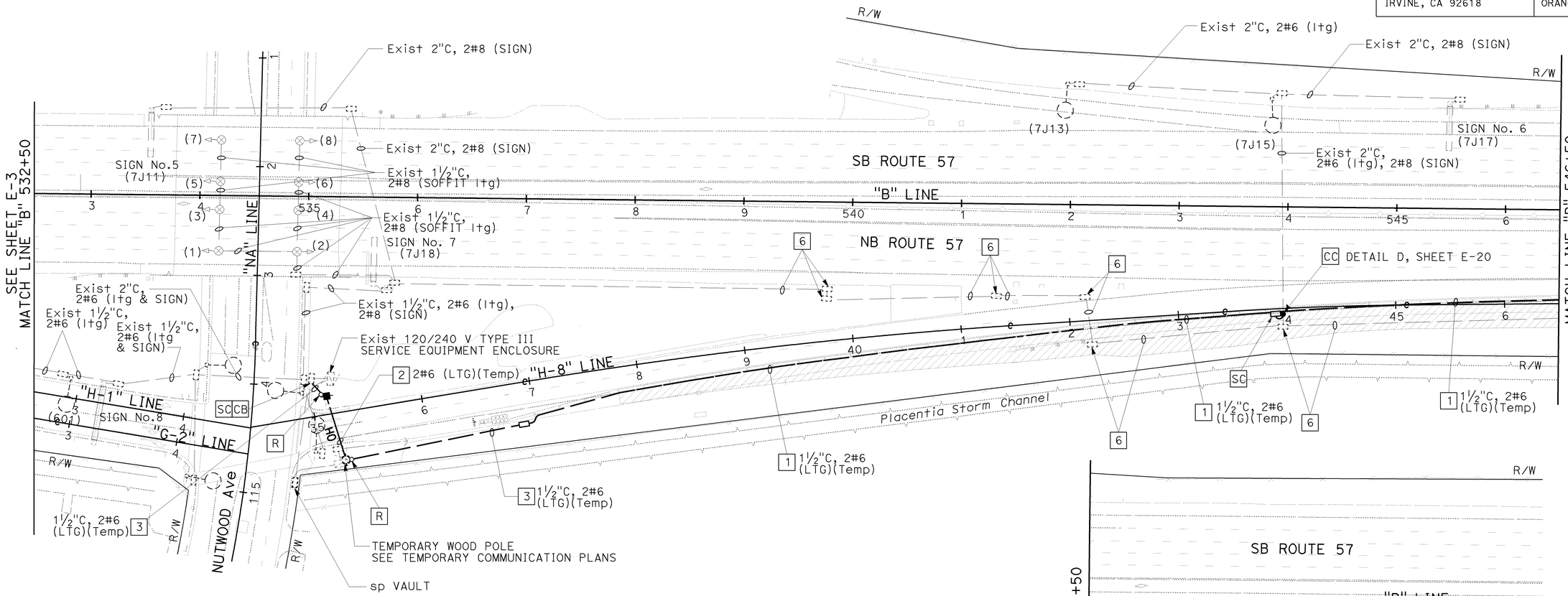

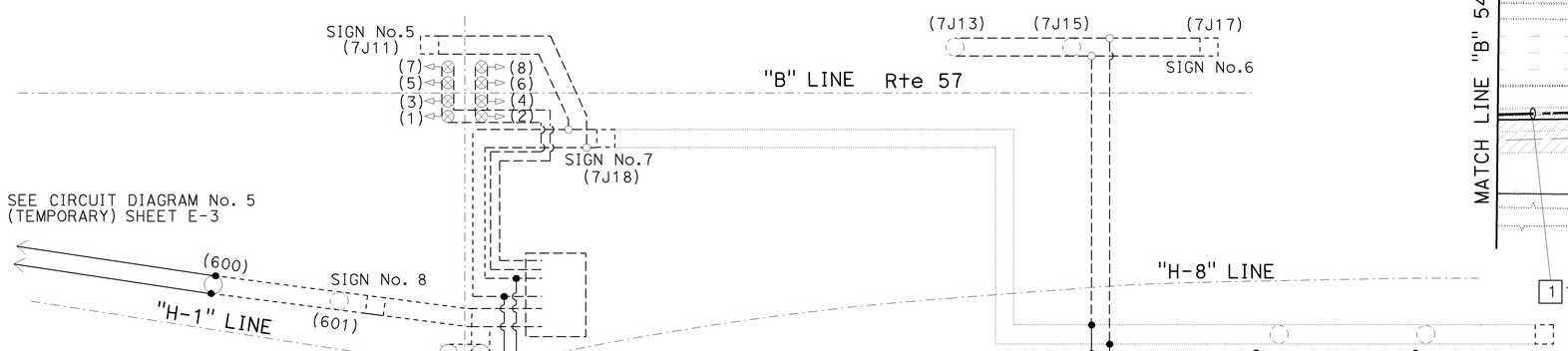

CIRCUIT DIAGRAM No. 6
(TEMPORARY)
NO SCALE

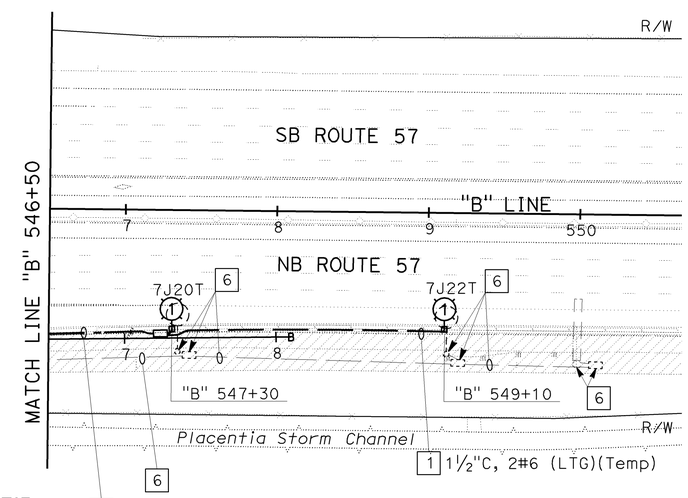

THIS PLAN IS ACCURATE FOR ELECTRICAL WORK ONLY.

LIGHTING (STAGE CONSTRUCTION)

STAGE 1A

SCALE: 1" = 50'

E-4

STATE OF CALIFORNIA - DEPARTMENT OF TRANSPORTATION
Caltrans
CONSULTANT FUNCTIONAL SUPERVISOR: MARK J. ESPOSITO
CALCULATED-DESIGNED BY: ARMANDO SOLIS
CHECKED BY: GARY TOLMIE
REVISED BY / DATE REVISED

H:\pdata\10105878\Admin\submittals\2009-06-29 FINAL Submittal\100% ELECTRONIC SUBMITTAL - MERGED01 FDEES2009BYNIGHT\traffic\c0F031ua004.dgn

LAST REVISION 08-01-08
DATE PLOTTED => 21-DEC-2009
TIME PLOTTED => 10:28

Dist	COUNTY	ROUTE	POST MILES TOTAL PROJECT	SHEET No.	TOTAL SHEETS
12	Ora	57	16.2/18.6	564	960

REGISTERED CIVIL ENGINEER 7/15/09 DATE

12-14-09
PLANS APPROVAL DATE

REGISTERED PROFESSIONAL ENGINEER ARMANDO SOLIS No. 72012 Exp. 6-30-10 CIVIL STATE OF CALIFORNIA

THE STATE OF CALIFORNIA OR ITS OFFICERS OR AGENTS SHALL NOT BE RESPONSIBLE FOR THE ACCURACY OR COMPLETENESS OF SCANNED COPIES OF THIS PLAN SHEET.

RBF CONSULTING
14275 ALTON PKWY
IRVINE, CA 92618

OCTA
550 S. MAIN STREET
ORANGE, CA 92863

NOTES (THIS SHEET):

1. FOR NOTES, LIGHTING STAGE CONSTRUCTION LEGEND, AND CIRCUIT DIAGRAM LEGEND SEE SHEET E-1.
2. FOR ACCURATE RIGHT OF WAY DATA, CONTACT RIGHT OF WAY ENGINEERING AT THE DISTRICT OFFICE.

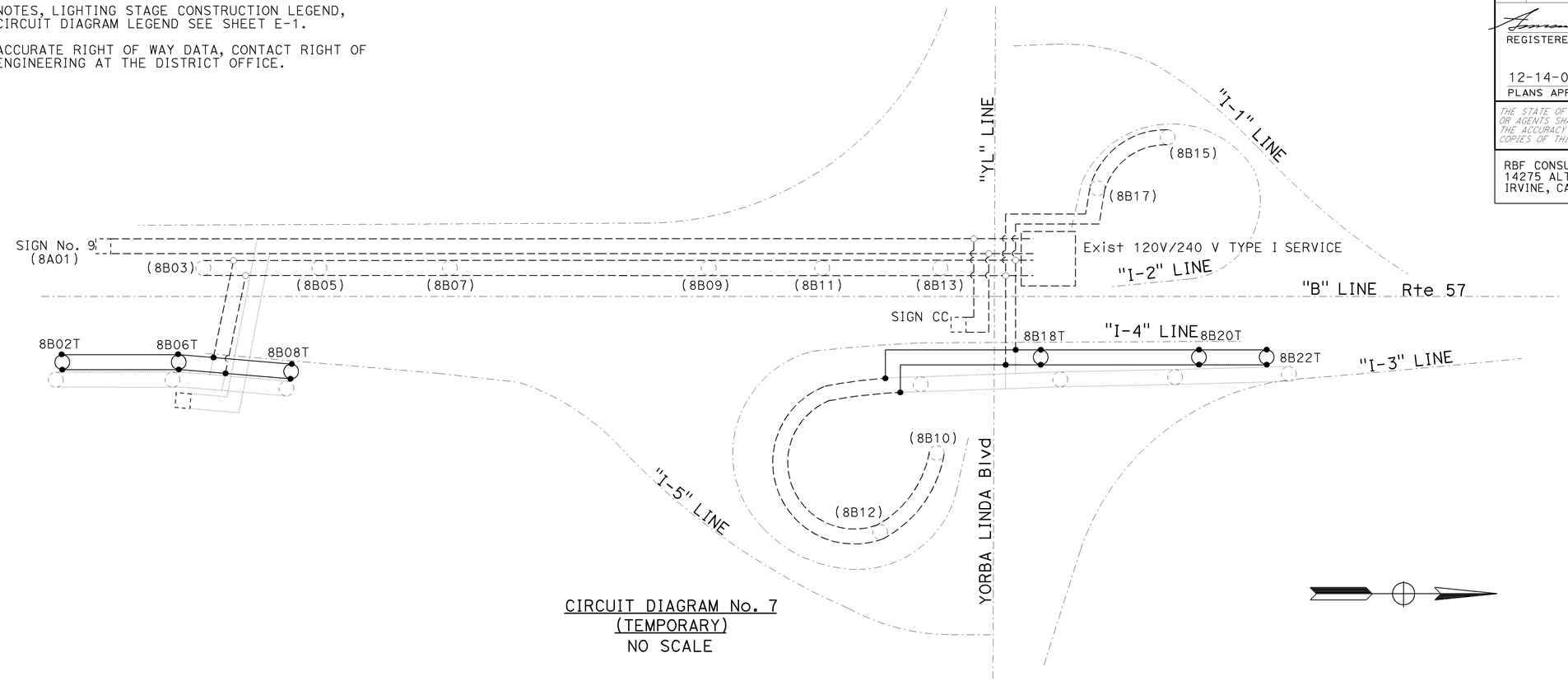

CIRCUIT DIAGRAM No. 7
(TEMPORARY)
NO SCALE

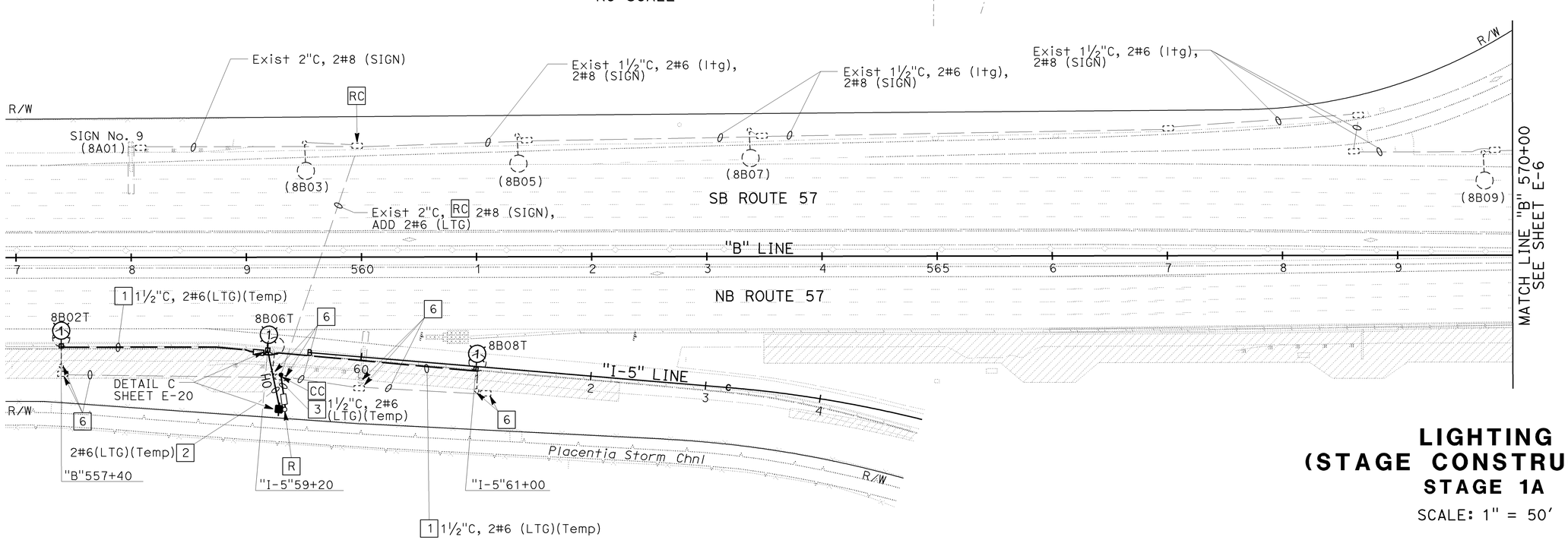

LIGHTING (STAGE CONSTRUCTION)

STAGE 1A

SCALE: 1" = 50'

THIS PLAN IS ACCURATE FOR ELECTRICAL WORK ONLY.

E-5

STATE OF CALIFORNIA - DEPARTMENT OF TRANSPORTATION
Caltrans
CONSULTANT FUNCTIONAL SUPERVISOR: MARK J. ESPOSITO
CALCULATED-DESIGNED BY: GARY TOLMIE
CHECKED BY: ARMANDO SOLIS
REVISED BY / DATE REVISED

H:\pdata\10105878\Admin\submittals\2009-06-29 FINAL Submittal\100% ELECTRONIC SUBMITTAL - MERGED01-FDEES2009BYNOTES\traffic\c0F031ua005.dgn

LAST REVISION 08-01-08
DATE PLOTTED => 21-DEC-2009
TIME PLOTTED => 10:28

Dist	COUNTY	ROUTE	POST MILES TOTAL PROJECT	SHEET No.	TOTAL SHEETS
12	Ora	57	16.2/18.6	565	960

REGISTERED CIVIL ENGINEER 7/15/09 DATE

12-14-09
PLANS APPROVAL DATE

REGISTERED PROFESSIONAL ENGINEER ARMANDO SOLIS No. 72012 Exp. 6-30-10 CIVIL STATE OF CALIFORNIA

THE STATE OF CALIFORNIA OR ITS OFFICERS OR AGENTS SHALL NOT BE RESPONSIBLE FOR THE ACCURACY OR COMPLETENESS OF SCANNED COPIES OF THIS PLAN SHEET.

RBF CONSULTING
14275 ALTON PKWY
IRVINE, CA 92618

OCTA
550 S. MAIN STREET
ORANGE, CA 92863

NOTES (THIS SHEET):

1. FOR GENERAL NOTES, LIGHTING STAGE CONSTRUCTION LEGEND, AND CIRCUIT DIAGRAM LEGEND SEE SHEET E-1
2. FOR ACCURATE RIGHT OF WAY DATA, CONTACT RIGHT OF WAY ENGINEERING AT THE DISTRICT OFFICE.

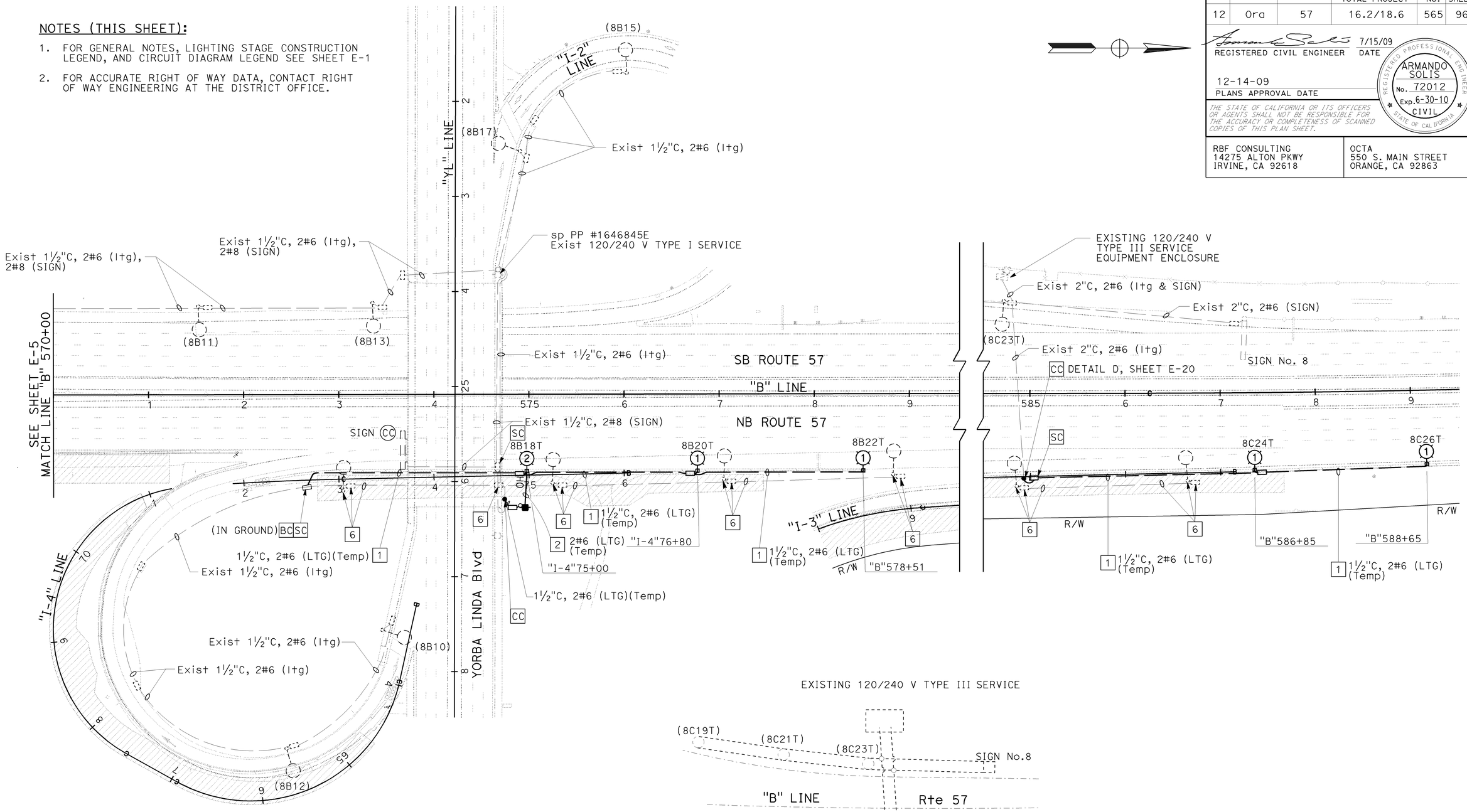

EXISTING 120/240 V TYPE III SERVICE

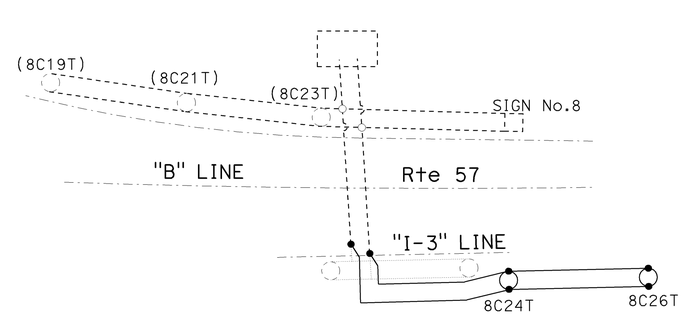

CIRCUIT DIAGRAM No. 8
(TEMPORARY)
NO SCALE

LIGHTING (STAGE CONSTRUCTION)

(STAGE 1A)

SCALE: 1" = 50'

THIS PLAN IS ACCURATE FOR ELECTRICAL WORK ONLY.

E-6

STATE OF CALIFORNIA - DEPARTMENT OF TRANSPORTATION
Caltrans
CONSULTANT FUNCTIONAL SUPERVISOR: MARK J. ESPOSITO
CALCULATED-DESIGNED BY: GARY TOLMIE
CHECKED BY: ARMANDO SOLIS
REVISED BY / DATE REVISED

LAST REVISION 08-01-08 | DATE PLOTTED => 21-DEC-2009 | TIME PLOTTED => 10:28

H:\pdata\10105878\Admin\submittals\2009-07-15 FINAL Electronic-Only Submittal\DGN\ 15:31 PLOT File: 21-DEC-2009 10:28 c0F031ua006.dgn

Dist	COUNTY	ROUTE	POST MILES TOTAL PROJECT	SHEET No.	TOTAL SHEETS
12	Ora	57	16.2/18.6	566	960

REGISTERED CIVIL ENGINEER 7/15/09 DATE

12-14-09
PLANS APPROVAL DATE

REGISTERED PROFESSIONAL ENGINEER ARMANDO SOLIS No. 72012 Exp. 6-30-10 CIVIL STATE OF CALIFORNIA

THE STATE OF CALIFORNIA OR ITS OFFICERS OR AGENTS SHALL NOT BE RESPONSIBLE FOR THE ACCURACY OR COMPLETENESS OF SCANNED COPIES OF THIS PLAN SHEET.

RBF CONSULTING
14275 ALTON PKWY
IRVINE, CA 92618

OCTA
550 S. MAIN STREET
ORANGE, CA 92863

NOTES (THIS SHEET):

1. FOR NOTES, LIGHTING STAGE CONSTRUCTION LEGEND, AND CIRCUIT DIAGRAM LEGEND SEE SHEET E-1.
2. FOR ACCURATE RIGHT OF WAY DATA, CONTACT RIGHT OF WAY ENGINEERING AT THE DISTRICT OFFICE.

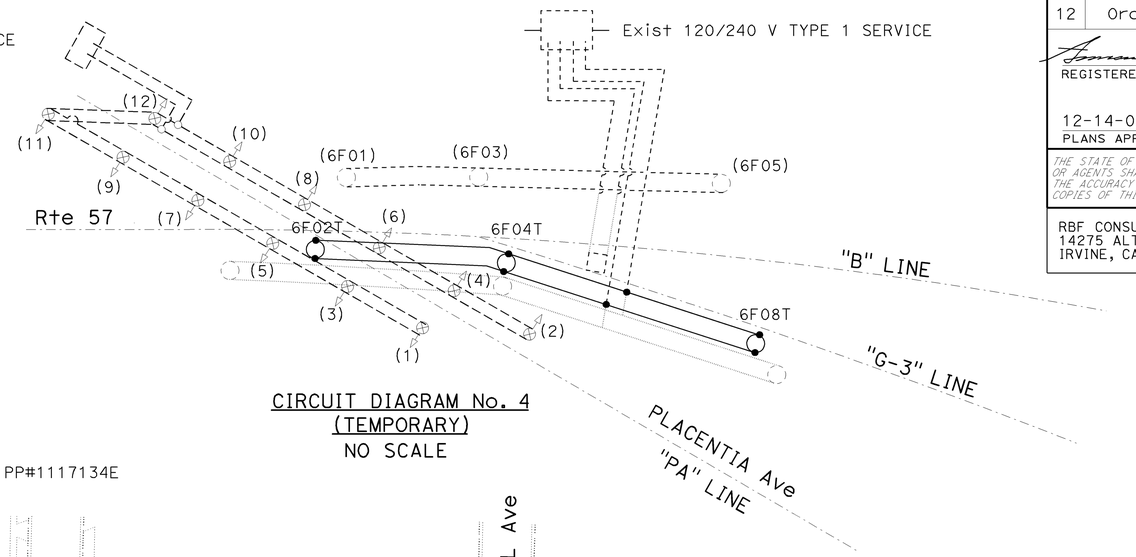

CIRCUIT DIAGRAM No. 4
(TEMPORARY)
NO SCALE

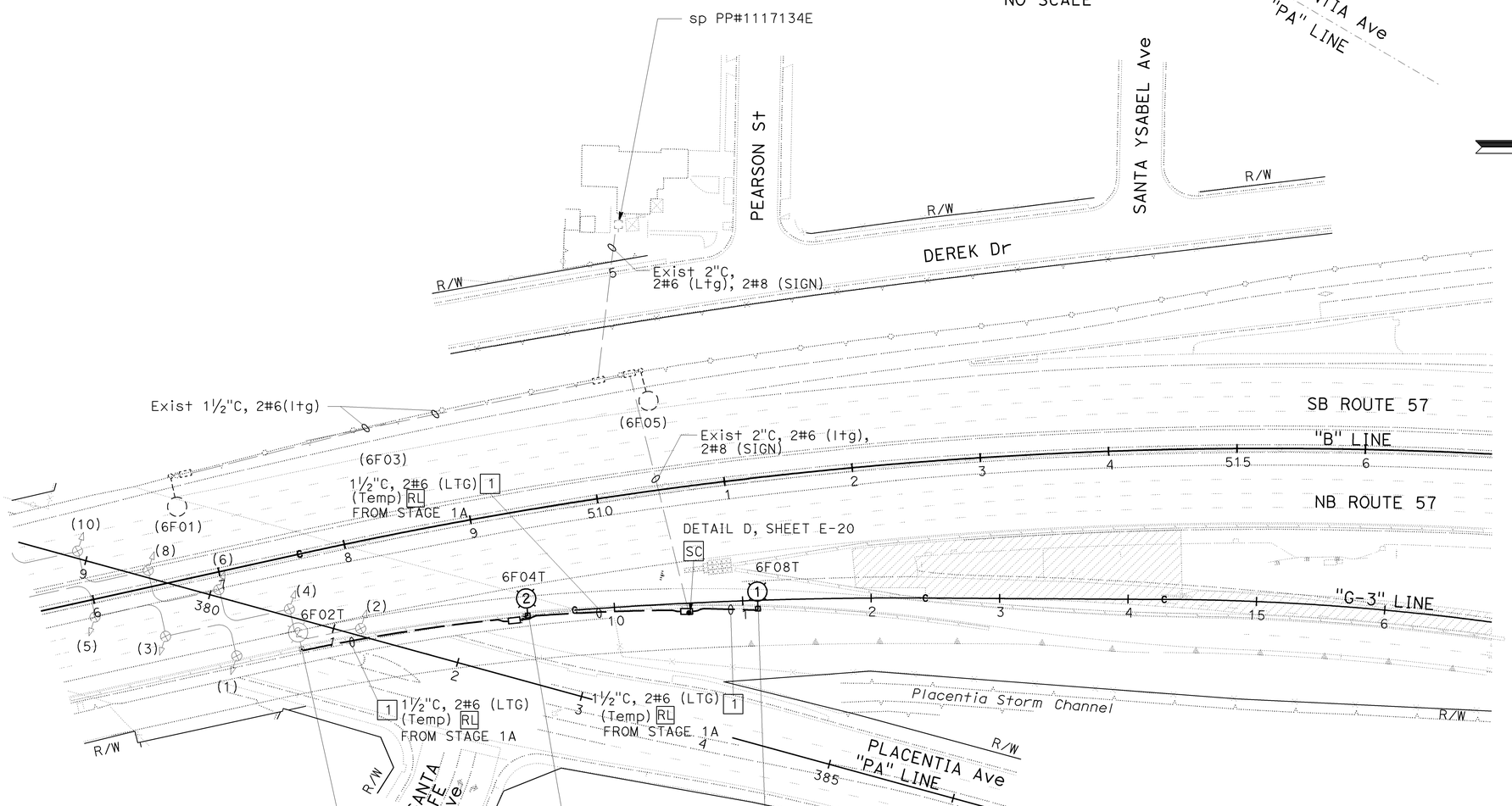

LIGHTING (STAGE CONSTRUCTION)
STAGE 1B

SCALE: 1" = 50'

E-6A

THIS PLAN IS ACCURATE FOR ELECTRICAL WORK ONLY.

STATE OF CALIFORNIA - DEPARTMENT OF TRANSPORTATION
Caltrans
CONSULTANT FUNCTIONAL SUPERVISOR: MARK J. ESPOSITO
CALCULATED-DESIGNED BY: GARY TOLMIE
CHECKED BY: ARMANDO SOLIS
REVISED BY / DATE REVISED

LAST REVISION 08-01-08 DATE PLOTTED => 21-DEC-2009 TIME PLOTTED => 10:28

H:\pdata\10105878\Admin\submittals\2009-06-29 FINAL Submittal\100% ELECTRONIC SUBMITTAL - MERGED01-FDEES2009BYNDT28\traffic\c0F031ua006A.dgn

BORDER LAST REVISED 4/11/2008 | RELATIVE BORDER SCALE IS IN INCHES 0 1 2 3 | USERNAME => s135318 | DGN FILE => c0F031ua006A.dgn | CU 12220 | EA 0F0311

Dist	COUNTY	ROUTE	POST MILES TOTAL PROJECT	SHEET No.	TOTAL SHEETS
12	Ora	57	16.2/18.6	567	960

REGISTERED CIVIL ENGINEER 7/15/09 DATE

12-14-09
PLANS APPROVAL DATE

REGISTERED PROFESSIONAL ENGINEER ARMANDO SOLIS No. 72012 Exp. 6-30-10 CIVIL STATE OF CALIFORNIA

THE STATE OF CALIFORNIA OR ITS OFFICERS OR AGENTS SHALL NOT BE RESPONSIBLE FOR THE ACCURACY OR COMPLETENESS OF SCANNED COPIES OF THIS PLAN SHEET.

RBF CONSULTING
14275 ALTON PKWY
IRVINE, CA 92618

OCTA
550 S. MAIN STREET
ORANGE, CA 92863

NOTES (THIS SHEET):

1. FOR NOTES, LIGHTING STAGE CONSTRUCTION LEGEND, AND CIRCUIT DIAGRAM LEGEND SEE SHEET E-1.
2. FOR ACCURATE RIGHT OF WAY DATA, CONTACT RIGHT OF WAY ENGINEERING AT THE DISTRICT OFFICE.

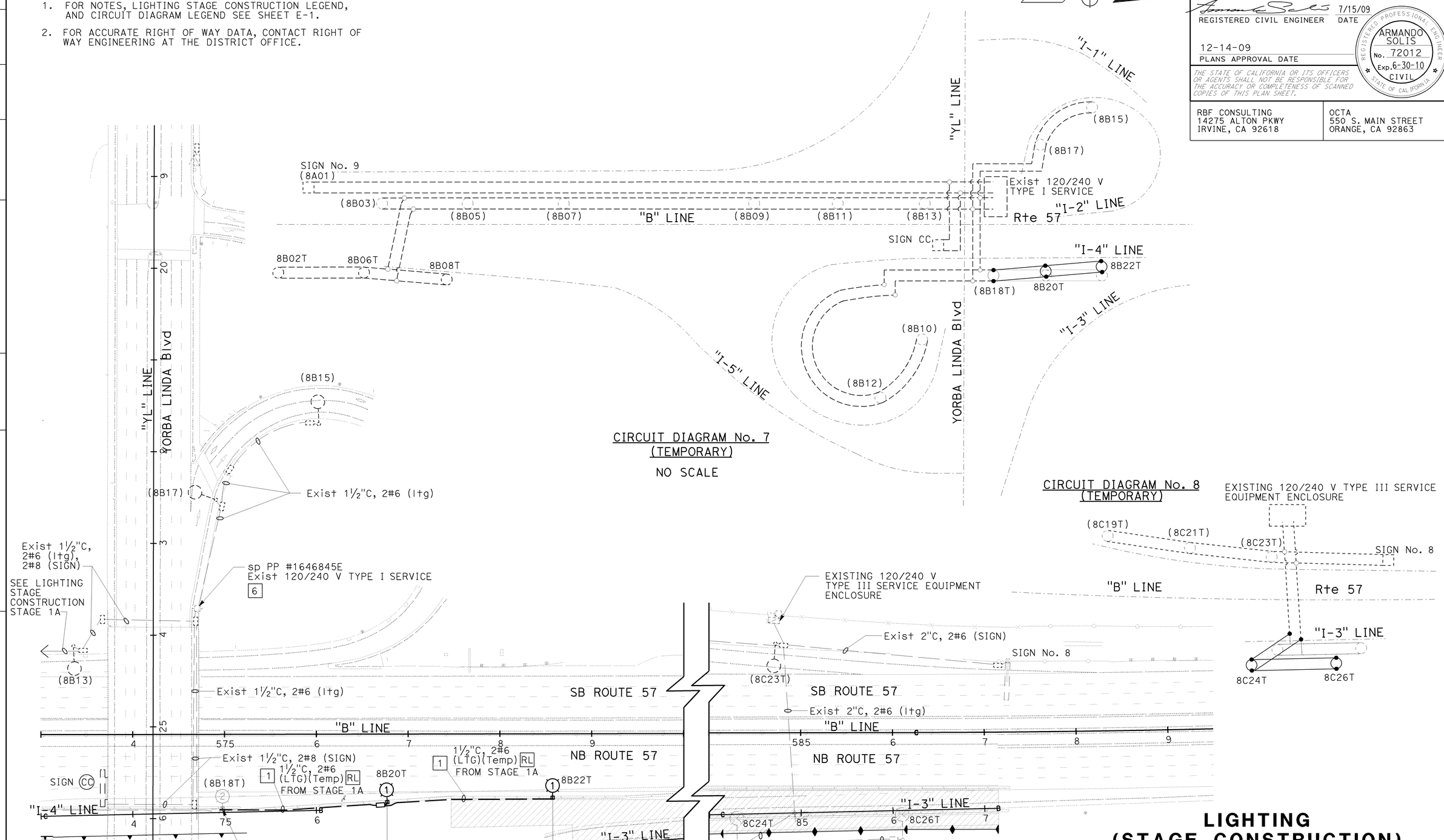

LIGHTING (STAGE CONSTRUCTION)

STAGE 1B

SCALE: 1" = 50'

THIS PLAN IS ACCURATE FOR ELECTRICAL WORK ONLY.

E-7

STATE OF CALIFORNIA - DEPARTMENT OF TRANSPORTATION

MARK J. ESPOSITO — CONSULTANT FUNCTIONAL SUPERVISOR

CALCULATED-DESIGNED BY: GARY TOLMIE

CHECKED BY: ARMANDO SOLIS

REVISED BY / DATE REVISED

LAST REVISION 08-01-08 DATE PLOTTED => 21-DEC-2009 TIME PLOTTED => 10:29

H:\pdata\10105878\Admin\submittals\2009-06-29 FINAL Submittal\100% ELECTRONIC SUBMITTAL - MERGED01-FDEES2009BYNDT229fic\c0F031ua007.dgn

Dist	COUNTY	ROUTE	POST MILES TOTAL PROJECT	SHEET No.	TOTAL SHEETS
12	Ora	57	16.2/18.6	568	960

REGISTERED CIVIL ENGINEER — DATE 7/15/09

12-14-09
PLANS APPROVAL DATE

REGISTERED PROFESSIONAL ENGINEER — ARMANDO SOLIS No. 72012 Exp. 6-30-10 CIVIL — STATE OF CALIFORNIA

THE STATE OF CALIFORNIA OR ITS OFFICERS OR AGENTS SHALL NOT BE RESPONSIBLE FOR THE ACCURACY OR COMPLETENESS OF SCANNED COPIES OF THIS PLAN SHEET.

RBF CONSULTING
14275 ALTON PKWY
IRVINE, CA 92618

OCTA
550 S. MAIN STREET
ORANGE, CA 92863

NOTES (THIS SHEET):

1. FOR NOTES, LIGHTING STAGE CONSTRUCTION LEGEND, AND CIRCUIT DIAGRAM LEGEND SEE SHEET E-1.
2. FOR ACCURATE RIGHT OF WAY DATA, CONTACT RIGHT OF WAY ENGINEERING AT THE DISTRICT OFFICE.

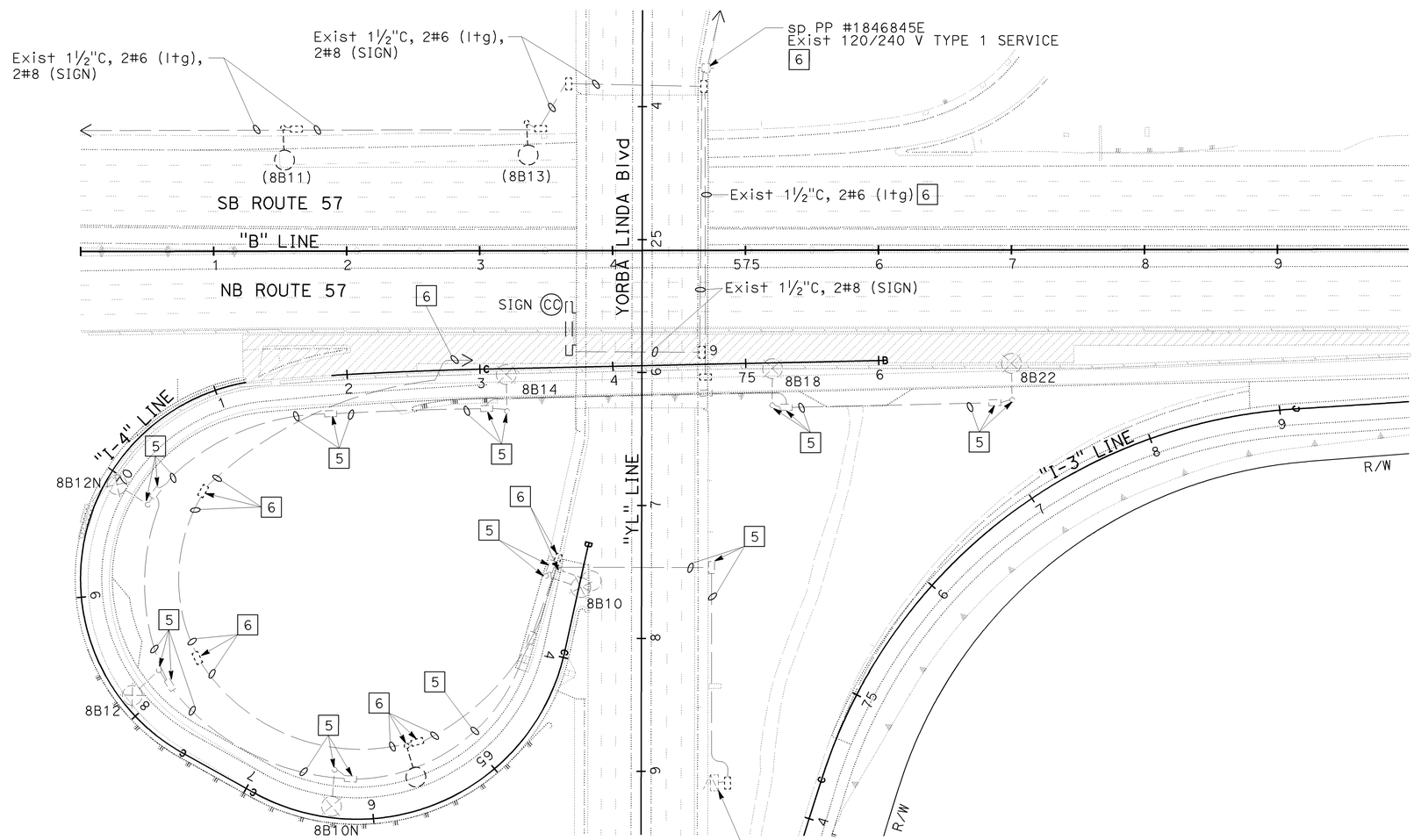

FOR REFERENCE ONLY

THIS PLAN IS ACCURATE FOR ELECTRICAL WORK ONLY.

LIGHTING (STAGE CONSTRUCTION)

STAGE 1C

SCALE: 1" = 50'

E-8

STATE OF CALIFORNIA - DEPARTMENT OF TRANSPORTATION
Caltrans
CONSULTANT FUNCTIONAL SUPERVISOR: MARK J. ESPOSITO
CALCULATED-DESIGNED BY: GARY TOLMIE
CHECKED BY: ARMANDO SOLIS
REVISED BY / DATE REVISED

LAST REVISION: DATE PLOTTED => 21-DEC-2009 TIME PLOTTED => 10:29
08-01-08

H:\pdata\10105878\Admin\submittals\2009-06-29 FINAL Submittal\100% ELECTRONIC SUBMITTAL - MERGED01-FDEES20080YNDT229fic\c0F031ua008.dgn

BORDER LAST REVISED 4/11/2008 | RELATIVE BORDER SCALE IS IN INCHES 0 1 2 3 | USERNAME => s135318 | DGN FILE => c0F031ua008.dgn | CU 12220 | EA 0F0311

Dist	COUNTY	ROUTE	POST MILES TOTAL PROJECT	SHEET No.	TOTAL SHEETS
12	Ora	57	16.2/18.6	569	960

REGISTERED CIVIL ENGINEER 7/15/09 DATE

12-14-09
PLANS APPROVAL DATE

REGISTERED PROFESSIONAL ENGINEER ARMANDO SOLIS No. 72012 Exp. 6-30-10 CIVIL STATE OF CALIFORNIA

THE STATE OF CALIFORNIA OR ITS OFFICERS OR AGENTS SHALL NOT BE RESPONSIBLE FOR THE ACCURACY OR COMPLETENESS OF SCANNED COPIES OF THIS PLAN SHEET.

RBF CONSULTING
14275 ALTON PKWY
IRVINE, CA 92618

OCTA
550 S. MAIN STREET
ORANGE, CA 92863

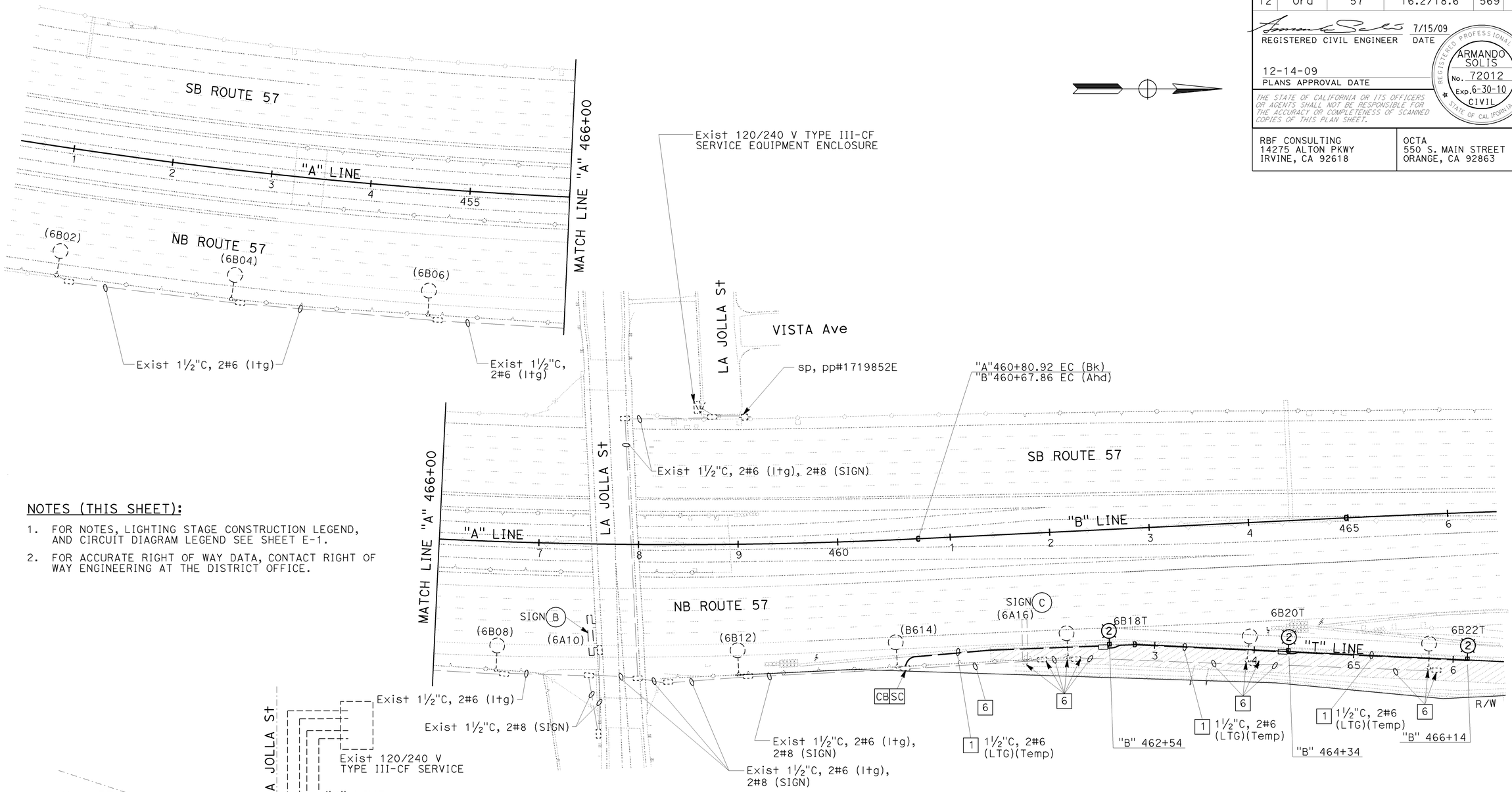

NOTES (THIS SHEET):

1. FOR NOTES, LIGHTING STAGE CONSTRUCTION LEGEND, AND CIRCUIT DIAGRAM LEGEND SEE SHEET E-1.
2. FOR ACCURATE RIGHT OF WAY DATA, CONTACT RIGHT OF WAY ENGINEERING AT THE DISTRICT OFFICE.

CIRCUIT DIAGRAM No. 1
(TEMPORARY)
NO SCALE

LIGHTING (STAGE CONSTRUCTION)
STAGE 2A

SCALE: 1" = 50'

E-9

THIS PLAN IS ACCURATE FOR ELECTRICAL WORK ONLY.

STATE OF CALIFORNIA - DEPARTMENT OF TRANSPORTATION
Caltrans
CONSULTANT FUNCTIONAL SUPERVISOR: MARK J. ESPOSITO
CALCULATED-DESIGNED BY: GARY TOLMIE
CHECKED BY: ARMANDO SOLIS
REVISED BY / DATE REVISED

LAST REVISION 08-01-08
DATE PLOTTED => 21-DEC-2009
TIME PLOTTED => 10:29

H:\pdata\10105878\Admin\submittals\2009-06-29 FINAL Submittal\100% ELECTRONIC SUBMITTAL - MERGED01.DGN

BORDER LAST REVISED 4/11/2008
RELATIVE BORDER SCALE IS IN INCHES 0 1 2 3
USERNAME => s135318
DGN FILE => c0F031ua009.dgn
CU 12220
EA 0F0311

Dist	COUNTY	ROUTE	POST MILES TOTAL PROJECT	SHEET No.	TOTAL SHEETS
12	Ora	57	16.2/18.6	570	960

REGISTERED CIVIL ENGINEER 7/15/09 DATE

12-14-09
PLANS APPROVAL DATE

REGISTERED PROFESSIONAL ENGINEER ARMANDO SOLIS No. 72012 Exp. 6-30-10 CIVIL STATE OF CALIFORNIA

THE STATE OF CALIFORNIA OR ITS OFFICERS OR AGENTS SHALL NOT BE RESPONSIBLE FOR THE ACCURACY OR COMPLETENESS OF SCANNED COPIES OF THIS PLAN SHEET.

RBF CONSULTING
14275 ALTON PKWY
IRVINE, CA 92618

OCTA
550 S. MAIN STREET
ORANGE, CA 92863

NOTES (THIS SHEET):

1. FOR GENERAL NOTES, LIGHTING STAGE CONSTRUCTION LEGEND, AND CIRCUIT DIAGRAM LEGEND SEE SHEET E-1.
2. FOR ACCURATE RIGHT OF WAY DATA, CONTACT RIGHT OF WAY ENGINEERING AT THE DISTRICT OFFICE.

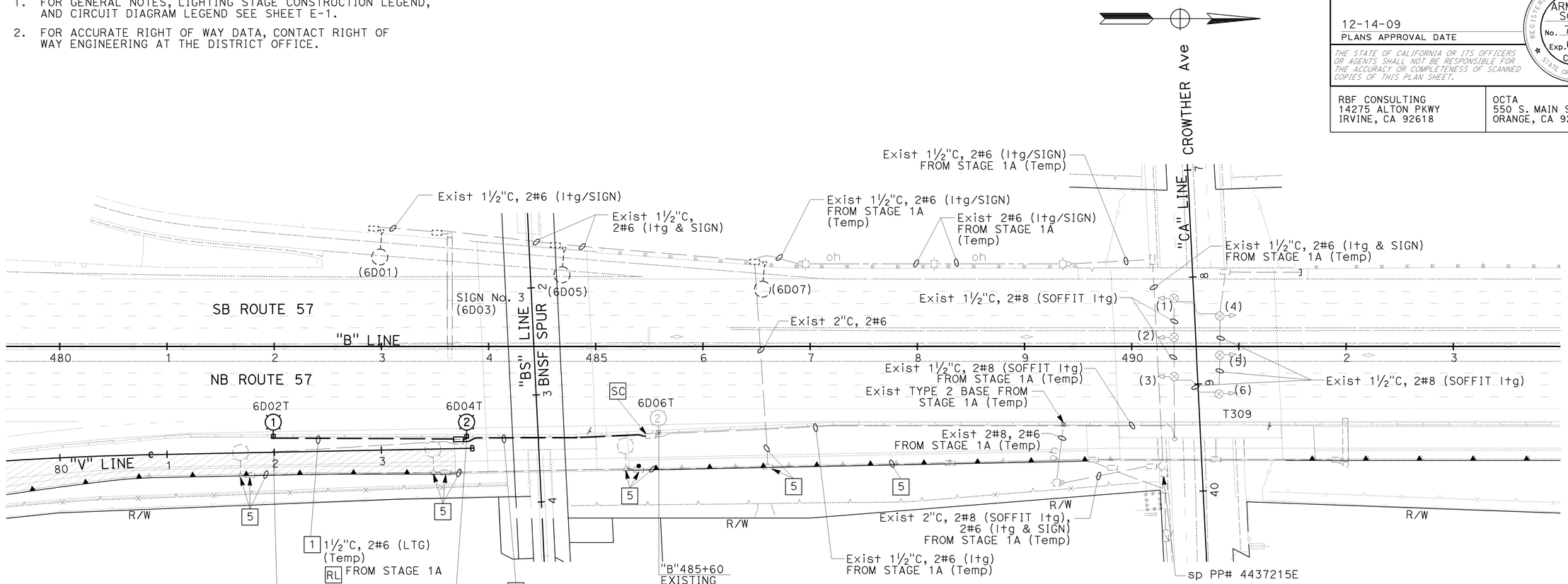

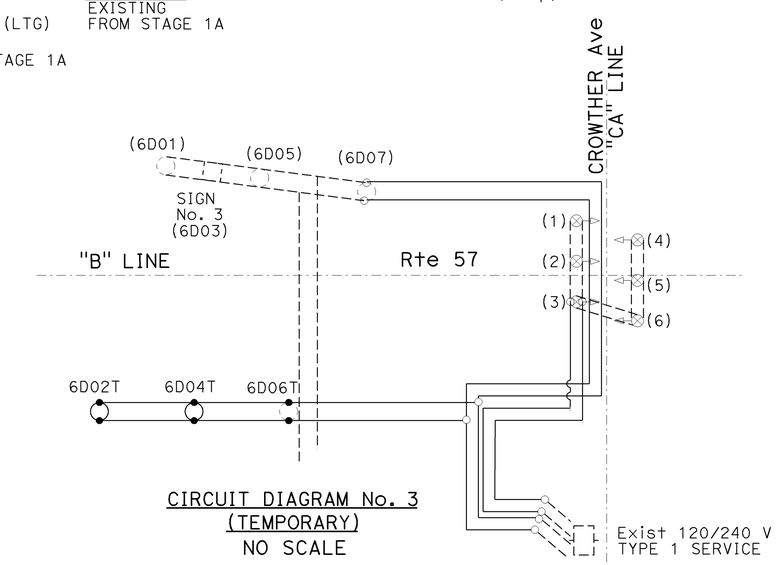

CIRCUIT DIAGRAM No. 3
(TEMPORARY)
NO SCALE

LIGHTING (STAGE CONSTRUCTION)

STAGE 2A

SCALE: 1" = 50'

E-10

THIS PLAN IS ACCURATE FOR ELECTRICAL WORK ONLY.

STATE OF CALIFORNIA - DEPARTMENT OF TRANSPORTATION

CONSULTANT FUNCTIONAL SUPERVISOR: MARK J. ESPOSITO

CALCULATED-DESIGNED BY: GARY TOLMIE

CHECKED BY: ARMANDO SOLIS

REVISED BY / DATE REVISED

H:\pdata\10105878\Admin\submittals\2009-06-29 FINAL Submittal\100% ELECTRONIC SUBMITTAL - MERGED01.DGN

BORDER LAST REVISED 4/11/2008

RELATIVE BORDER SCALE IS IN INCHES 0 1 2 3

USERNAME => s135318
DGN FILE => c0F031ua010.dgn

CU 12220

EA 0F0311

LAST REVISION 08-01-08

DATE PLOTTED => 21-DEC-2009
TIME PLOTTED => 10:29

Dist	COUNTY	ROUTE	POST MILES TOTAL PROJECT	SHEET No.	TOTAL SHEETS
12	Ora	57	16.2/18.6	571	960

REGISTERED CIVIL ENGINEER 7/15/09 DATE

12-14-09
PLANS APPROVAL DATE

REGISTERED PROFESSIONAL ENGINEER ARMANDO SOLIS No. 72012 Exp. 6-30-10 CIVIL STATE OF CALIFORNIA

THE STATE OF CALIFORNIA OR ITS OFFICERS OR AGENTS SHALL NOT BE RESPONSIBLE FOR THE ACCURACY OR COMPLETENESS OF SCANNED COPIES OF THIS PLAN SHEET.

RBF CONSULTING
14275 ALTON PKWY
IRVINE, CA 92618

OCTA
550 S. MAIN STREET
ORANGE, CA 92863

NOTES (THIS SHEET):

1. FOR NOTES, LIGHTING STAGE CONSTRUCTION LEGEND, AND CIRCUIT DIAGRAM LEGEND SEE SHEET E-1.
2. FOR ACCURATE RIGHT OF WAY DATA, CONTACT RIGHT OF WAY ENGINEERING AT THE DISTRICT OFFICE.

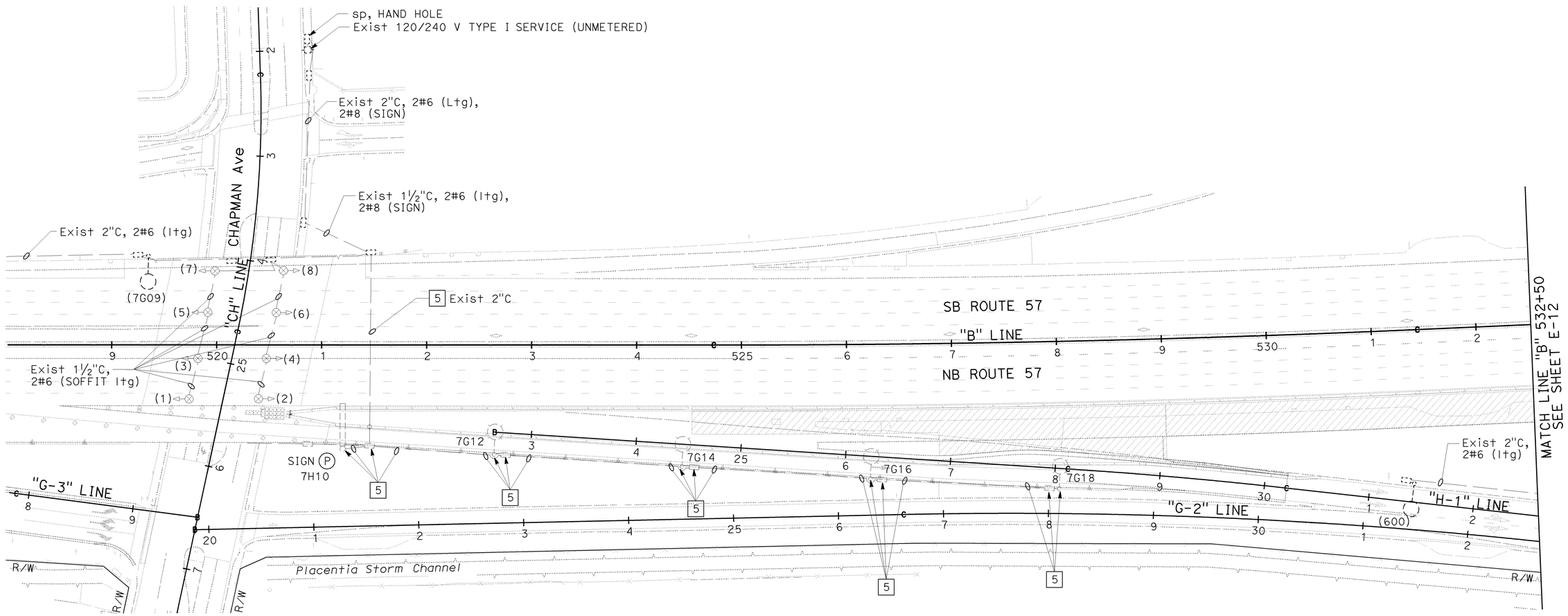

FOR REFERENCE ONLY

THIS PLAN IS ACCURATE FOR ELECTRICAL WORK ONLY.

LIGHTING (STAGE CONSTRUCTION)

STAGE 2A

SCALE: 1" = 50'

E-11

STATE OF CALIFORNIA - DEPARTMENT OF TRANSPORTATION

CONSULTANT FUNCTIONAL SUPERVISOR: MARK J. ESPOSITO

CALCULATED-DESIGNED BY: GARY TOLMIE

CHECKED BY: ARMANDO SOLIS

REVISED BY / DATE REVISED

LAST REVISION 08-01-08

DATE PLOTTED => 21-DEC-2009
TIME PLOTTED => 12:56

Dist	COUNTY	ROUTE	POST MILES TOTAL PROJECT	SHEET No.	TOTAL SHEETS
12	Ora	57	16.2/18.6	572	960

REGISTERED CIVIL ENGINEER 7/15/09 DATE

12-14-09
PLANS APPROVAL DATE

REGISTERED PROFESSIONAL ENGINEER ARMANDO SOLIS No. 72012 Exp. 6-30-10 CIVIL STATE OF CALIFORNIA

THE STATE OF CALIFORNIA OR ITS OFFICERS OR AGENTS SHALL NOT BE RESPONSIBLE FOR THE ACCURACY OR COMPLETENESS OF SCANNED COPIES OF THIS PLAN SHEET.

RBF CONSULTING
14275 ALTON PKWY
IRVINE, CA 92618

OCTA
550 S. MAIN STREET
ORANGE, CA 92863

NOTES (THIS SHEET):

1. FOR NOTES, LIGHTING STAGE CONSTRUCTION LEGEND, AND CIRCUIT DIAGRAM LEGEND SEE SHEET E-1.
2. FOR ACCURATE RIGHT OF WAY DATA, CONTACT RIGHT OF WAY ENGINEERING AT THE DISTRICT OFFICE.

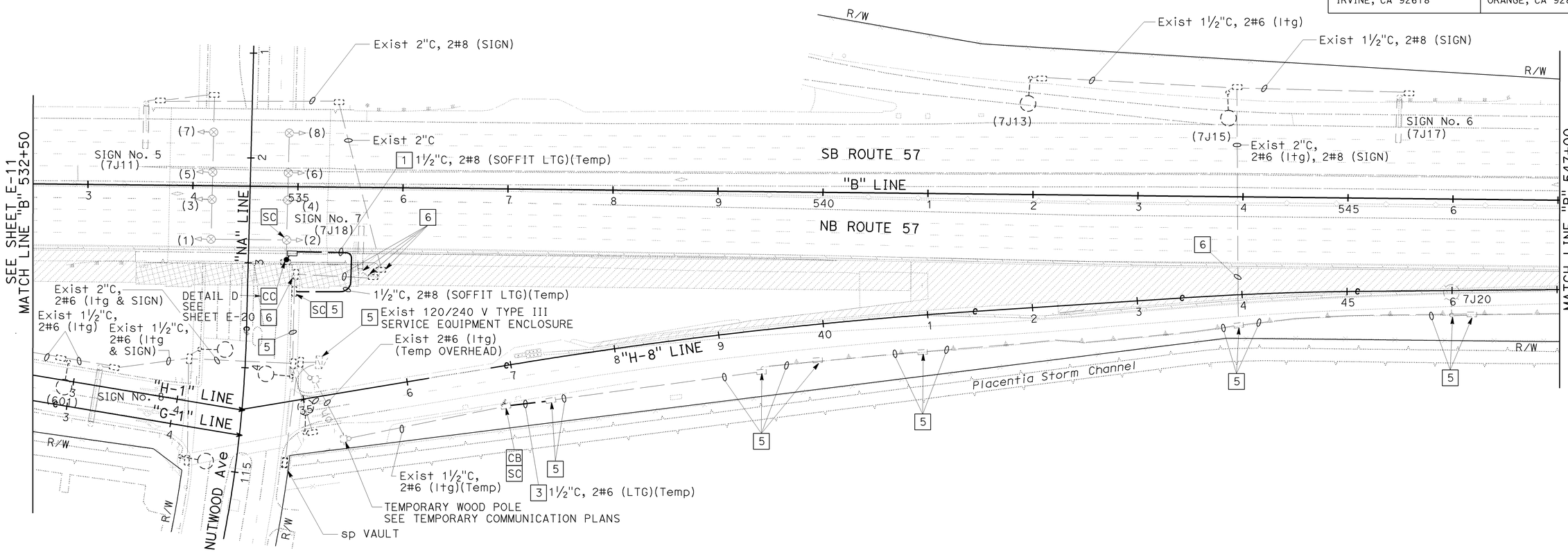

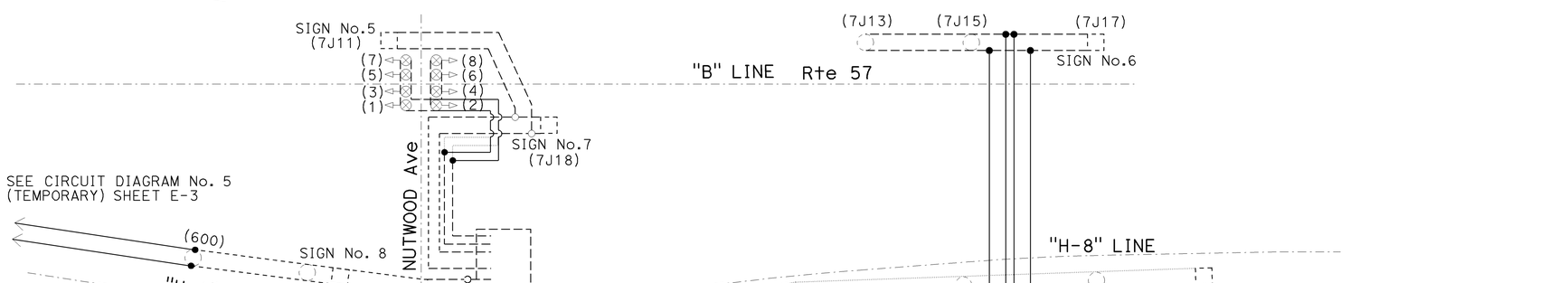

CIRCUIT DIAGRAM No. 6
(TEMPORARY)
NO SCALE

LIGHTING (STAGE CONSTRUCTION)

STAGE 2A

SCALE: 1" = 50'

THIS PLAN IS ACCURATE FOR ELECTRICAL WORK ONLY.

E-12

STATE OF CALIFORNIA - DEPARTMENT OF TRANSPORTATION
Caltrans
CONSULTANT FUNCTIONAL SUPERVISOR: MARK J. ESPOSITO
CALCULATED-DESIGNED BY: GARY TOLMIE
CHECKED BY: ARMANDO SOLIS
REVISED BY / DATE REVISED

LAST REVISION 08-01-08 DATE PLOTTED => 21-DEC-2009 TIME PLOTTED => 12:56

H:\pdata\10105878\Admin\submittals\2009-06-29 FINAL Submittal\100% ELECTRONIC SUBMITTAL - MERGED01.DGN 12:56 BY USER trene

BORDER LAST REVISED 4/11/2008 | RELATIVE BORDER SCALE IS IN INCHES 0 1 2 3 | USERNAME => trrene DGN FILE => c0F031ua012.dgn | CU 12220 | EA 0F0311

Dist	COUNTY	ROUTE	POST MILES TOTAL PROJECT	SHEET No.	TOTAL SHEETS
12	Ora	57	16.2/18.6	573	960

REGISTERED CIVIL ENGINEER 7/15/09 DATE

12-14-09
PLANS APPROVAL DATE

REGISTERED PROFESSIONAL ENGINEER ARMANDO SOLIS No. 72012 Exp. 6-30-10 CIVIL STATE OF CALIFORNIA

THE STATE OF CALIFORNIA OR ITS OFFICERS OR AGENTS SHALL NOT BE RESPONSIBLE FOR THE ACCURACY OR COMPLETENESS OF SCANNED COPIES OF THIS PLAN SHEET.

RBF CONSULTING
14275 ALTON PKWY
IRVINE, CA 92618

OCTA
550 S. MAIN STREET
ORANGE, CA 92863

NOTES (THIS SHEET):

1. FOR NOTES, LIGHTING STAGE CONSTRUCTION LEGEND, AND CIRCUIT DIAGRAM LEGEND SEE SHEET E-1.
2. FOR ACCURATE RIGHT OF WAY DATA, CONTACT RIGHT OF WAY ENGINEERING AT THE DISTRICT OFFICE.

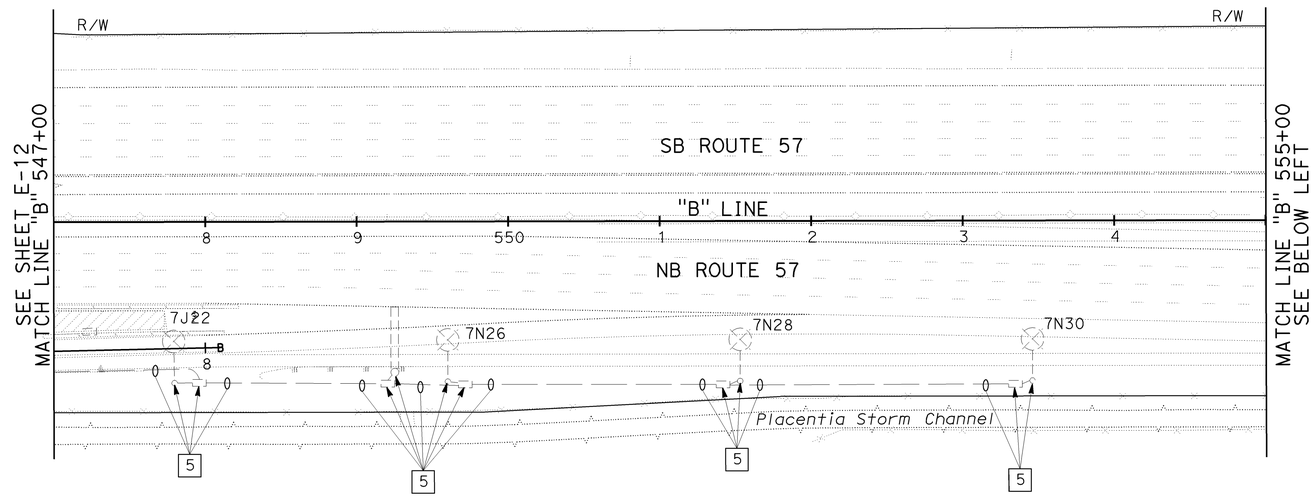

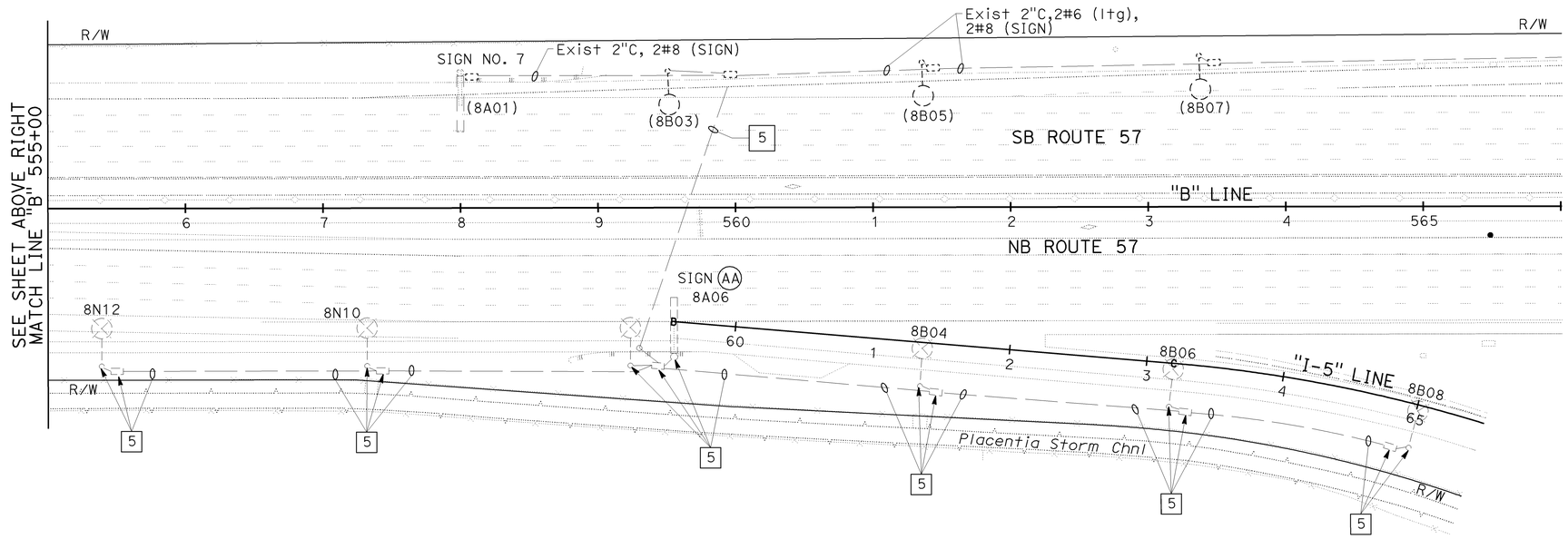

LIGHTING (STAGE CONSTRUCTION)

(STAGE 2A)

SCALE: 1" = 50'

E-13

FOR REFERENCE ONLY

THIS PLAN IS ACCURATE FOR ELECTRICAL WORK ONLY.

STATE OF CALIFORNIA - DEPARTMENT OF TRANSPORTATION

Caltrans

CONSULTANT FUNCTIONAL SUPERVISOR: MARK J. ESPOSITO

CALCULATED-DESIGNED BY: ARMANDO SOLIS

CHECKED BY: GARY TOLMIE

REVISED BY / DATE REVISED

H:\pdata\10105878\Admin\submittals\2009-06-29 FINAL Submittal\100% ELECTRONIC SUBMITTAL - MERGED\FDEES20BY17\traffic\c0F031ua013.dgn

LAST REVISION 08-01-08 DATE PLOTTED => 21-DEC-2009 TIME PLOTTED => 12:56

BORDER LAST REVISED 4/11/2008 | RELATIVE BORDER SCALE IS IN INCHES 0 1 2 3 | USERNAME => trrene DGN FILE => c0F031ua013.dgn | CU 12220 | EA 0F0311

Dist	COUNTY	ROUTE	POST MILES TOTAL PROJECT	SHEET No.	TOTAL SHEETS
12	Ora	57	16.2/18.6	574	960

REGISTERED CIVIL ENGINEER 7/15/09 DATE

12-14-09
PLANS APPROVAL DATE

REGISTERED PROFESSIONAL ENGINEER ARMANDO SOLIS No. 72012 Exp. 6-30-10 CIVIL STATE OF CALIFORNIA

THE STATE OF CALIFORNIA OR ITS OFFICERS OR AGENTS SHALL NOT BE RESPONSIBLE FOR THE ACCURACY OR COMPLETENESS OF SCANNED COPIES OF THIS PLAN SHEET.

RBF CONSULTING
14275 ALTON PKWY
IRVINE, CA 92618

OCTA
550 S. MAIN STREET
ORANGE, CA 92863

NOTES (THIS SHEET):

1. FOR NOTES, LIGHTING STAGE CONSTRUCTION LEGEND, AND CIRCUIT DIAGRAM LEGEND SEE SHEET E-1.
2. FOR ACCURATE RIGHT OF WAY DATA, CONTACT RIGHT OF WAY ENGINEERING AT THE DISTRICT OFFICE.

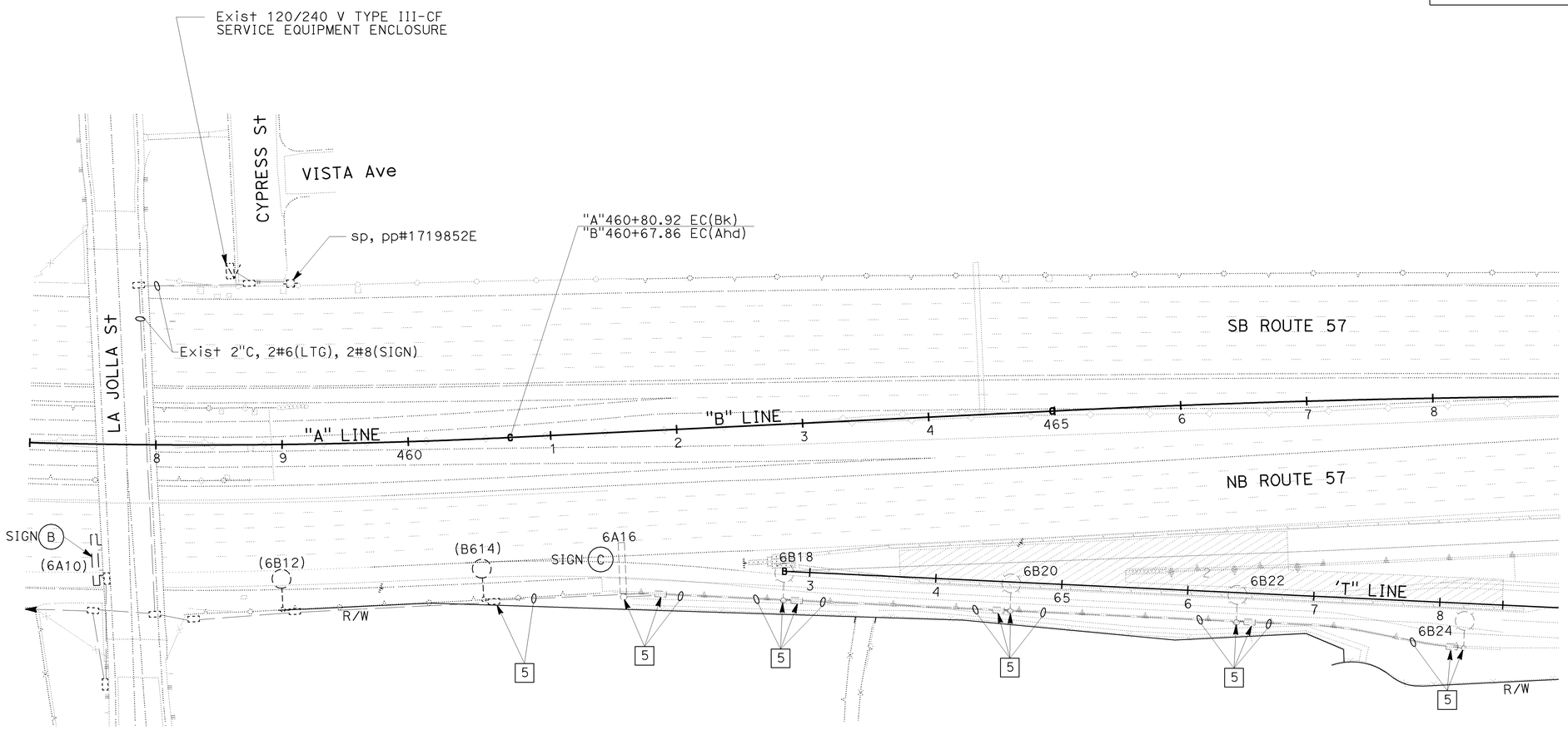

FOR REFERENCE ONLY

THIS PLAN IS ACCURATE FOR ELECTRICAL WORK ONLY.

LIGHTING (STAGE CONSTRUCTION)

(STAGE 2B)

SCALE: 1" = 50'

E-14

STATE OF CALIFORNIA - DEPARTMENT OF TRANSPORTATION
Caltrans

CONSULTANT FUNCTIONAL SUPERVISOR: MARK J. ESPOSITO
CALCULATED-DESIGNED BY: GARY TOLMIE
CHECKED BY: ARMANDO SOLIS
REVISED BY / DATE REVISED

H:\pdata\10105878\Admin\submittals\2009-06-29 FINAL Submittal\100% ELECTRONIC SUBMITTAL - MERGED\FDEES2009BY\traffic\c0F031ug014.dgn

LAST REVISION 08-01-08
DATE PLOTTED => 21-DEC-2009
TIME PLOTTED => 12:56

Dist	COUNTY	ROUTE	POST MILES TOTAL PROJECT	SHEET No.	TOTAL SHEETS
12	Ora	57	16.2/18.6	575	960

REGISTERED CIVIL ENGINEER 7/15/09 DATE

12-14-09
PLANS APPROVAL DATE

REGISTERED PROFESSIONAL ENGINEER ARMANDO SOLIS No. 72012 Exp. 6-30-10 CIVIL STATE OF CALIFORNIA

THE STATE OF CALIFORNIA OR ITS OFFICERS OR AGENTS SHALL NOT BE RESPONSIBLE FOR THE ACCURACY OR COMPLETENESS OF SCANNED COPIES OF THIS PLAN SHEET.

RBF CONSULTING
14275 ALTON PKWY
IRVINE, CA 92618

OCTA
550 S. MAIN STREET
ORANGE, CA 92863

NOTES (THIS SHEET):

1. FOR NOTES, LIGHTING STAGE CONSTRUCTION LEGEND, AND CIRCUIT DIAGRAM LEGEND SEE SHEET E-1.
2. FOR ACCURATE RIGHT OF WAY DATA, CONTACT RIGHT OF WAY ENGINEERING AT THE DISTRICT OFFICE.

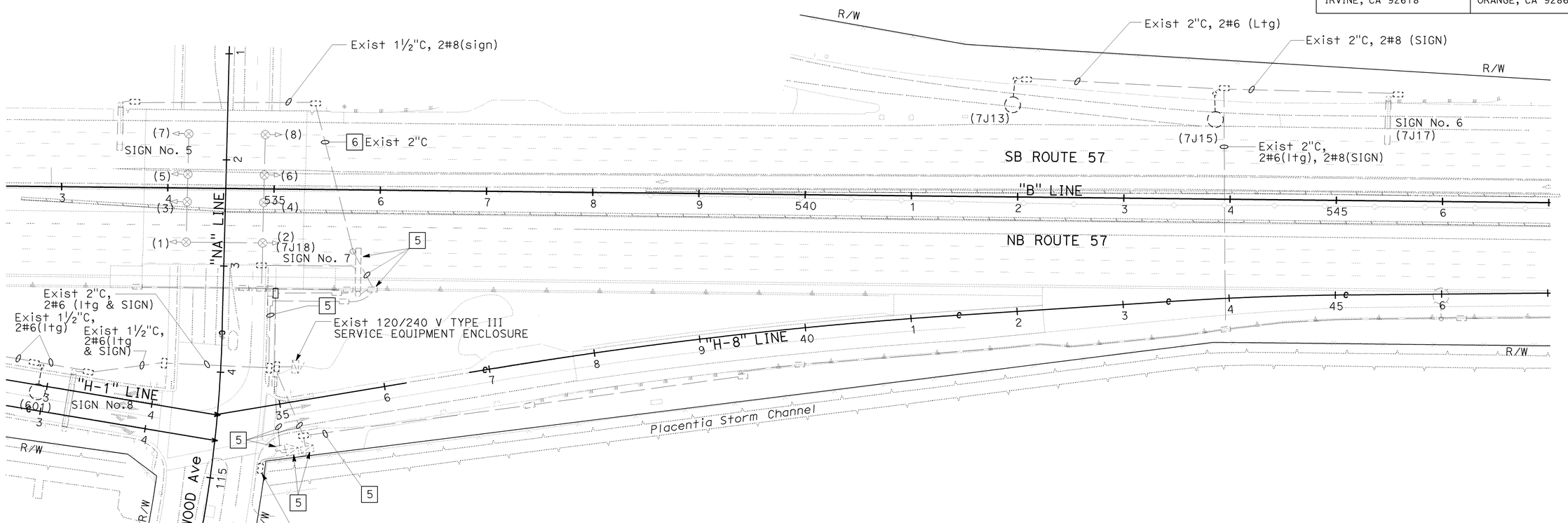

FOR REFERENCE ONLY

THIS PLAN IS ACCURATE FOR ELECTRICAL WORK ONLY.

LIGHTING (STAGE CONSTRUCTION)

(STAGE 2B)

SCALE: 1" = 50'

E-15

STATE OF CALIFORNIA - DEPARTMENT OF TRANSPORTATION

CONSULTANT FUNCTIONAL SUPERVISOR: MARK J. ESPOSITO

CALCULATED-DESIGNED BY: GARY TOLMIE

CHECKED BY: ARMANDO SOLIS

REVISED BY | DATE REVISED

H:\pdata\10105878\Admin\submittals\2009-06-29 FINAL Submittal\100% ELECTRONIC SUBMITTAL - MERGED21-FDEES2009BY17.56\traffic\c0F031ua015.dgn

LAST REVISION 08-01-08 | DATE PLOTTED => 21-DEC-2009 | TIME PLOTTED => 12:56

BORDER LAST REVISED 4/11/2008 | RELATIVE BORDER SCALE IS IN INCHES 0 1 2 3 | USERNAME => trrene | DGN FILE => c0F031ua015.dgn | CU 12220 | EA 0F0311

Dist	COUNTY	ROUTE	POST MILES TOTAL PROJECT	SHEET No.	TOTAL SHEETS
12	Ora	57	16.2/18.6	576	960

REGISTERED CIVIL ENGINEER 7/15/09 DATE

12-14-09
PLANS APPROVAL DATE

REGISTERED PROFESSIONAL ENGINEER ARMANDO SOLIS No. 72012 Exp. 6-30-10 CIVIL STATE OF CALIFORNIA

THE STATE OF CALIFORNIA OR ITS OFFICERS OR AGENTS SHALL NOT BE RESPONSIBLE FOR THE ACCURACY OR COMPLETENESS OF SCANNED COPIES OF THIS PLAN SHEET.

RBF CONSULTING
14275 ALTON PKWY
IRVINE, CA 92618

OCTA
550 S. MAIN STREET
ORANGE, CA 92863

NOTES (THIS SHEET):

1. FOR NOTES, LIGHTING STAGE CONSTRUCTION LEGEND, AND CIRCUIT DIAGRAM LEGEND SEE SHEET E-1.
2. FOR ACCURATE RIGHT OF WAY DATA, CONTACT RIGHT OF WAY ENGINEERING AT THE DISTRICT OFFICE.

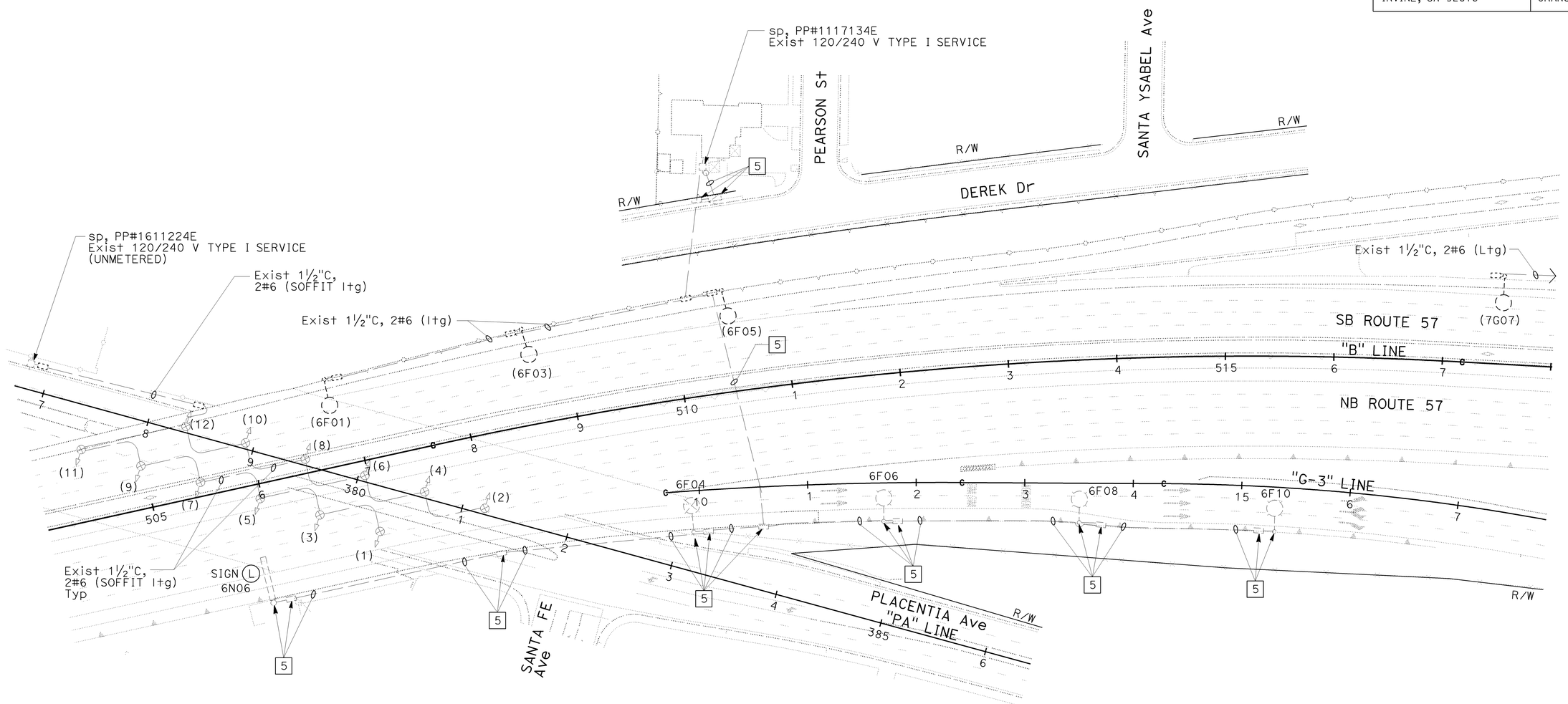

FOR REFERENCE ONLY

LIGHTING (STAGE CONSTRUCTION)

STAGE 2B

SCALE: 1" = 50'

E-16

THIS PLAN IS ACCURATE FOR ELECTRICAL WORK ONLY.

STATE OF CALIFORNIA - DEPARTMENT OF TRANSPORTATION

CONSULTANT FUNCTIONAL SUPERVISOR: MARK J. ESPOSITO

CALCULATED-DESIGNED BY: GARY TOLMIE

CHECKED BY: ARMANDO SOLIS

REVISED BY / DATE REVISED

LAST REVISION 08-01-08 DATE PLOTTED => 21-DEC-2009 TIME PLOTTED => 12:56

H:\pdata\10105878\Admin\submittals\2009-06-29 FINAL Submittal\100% ELECTRONIC SUBMITTAL - MERGED\FDEES20BYA\traffic\c0F031ua016.dgn

BORDER LAST REVISED 4/11/2008

RELATIVE BORDER SCALE IS IN INCHES 0 1 2 3

USERNAME => trrene
DGN FILE => c0F031ua016.dgn

CU 12220

EA 0F0311

Dist	COUNTY	ROUTE	POST MILES TOTAL PROJECT	SHEET No.	TOTAL SHEETS
12	Ora	57	16.2/18.6	577	960

REGISTERED CIVIL ENGINEER 7/15/09 DATE

12-14-09
PLANS APPROVAL DATE

REGISTERED PROFESSIONAL ENGINEER ARMANDO SOLIS No. 72012 Exp. 6-30-10 CIVIL STATE OF CALIFORNIA

THE STATE OF CALIFORNIA OR ITS OFFICERS OR AGENTS SHALL NOT BE RESPONSIBLE FOR THE ACCURACY OR COMPLETENESS OF SCANNED COPIES OF THIS PLAN SHEET.

RBF CONSULTING
14275 ALTON PKWY
IRVINE, CA 92618

OCTA
550 S. MAIN STREET
ORANGE, CA 92863

NOTES:

1. NEW OVERHEAD CABLE SPANNING PARALLEL TO RAILING SHALL BE SLACK SPANNED WITH 150′ Max SPAN BETWEEN POLES, 6′ Min SAG AND 20′ Min OVERHEAD CLEARANCE
2. OVERHEAD CABLE SPANNING PERPENDICULAR TO RAILING SHALL BE SLACK SPANED WITH 44′ Max SPAN, 4′ Min SAG AND 10′ Min OVERHEAD CLEARANCE TO FIXED OBJECTS
3. LUMINAIRE MAST ARM (LMA) SHALL NOT EXCEED 6′ IN LENGTH

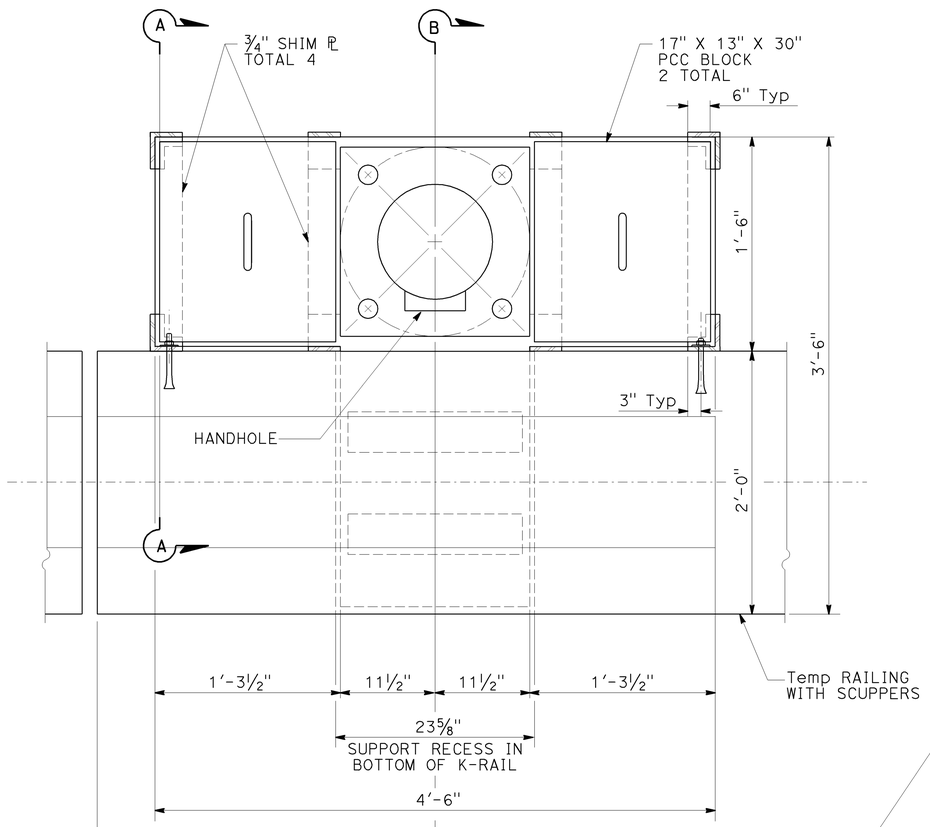

℄ LIGHT POLE
= ℄ 23⅝" SCUPPER RECESS
IN TEMPORARY RAILING
(TYPE K)

B

PLAN

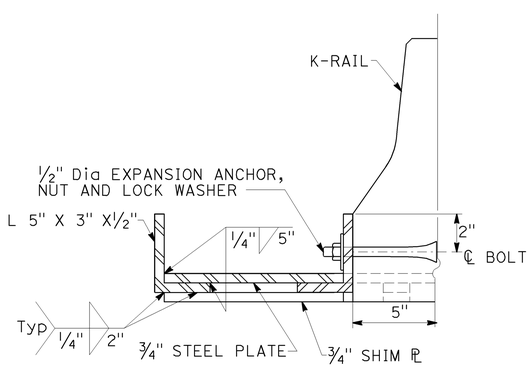

SECTION A-A

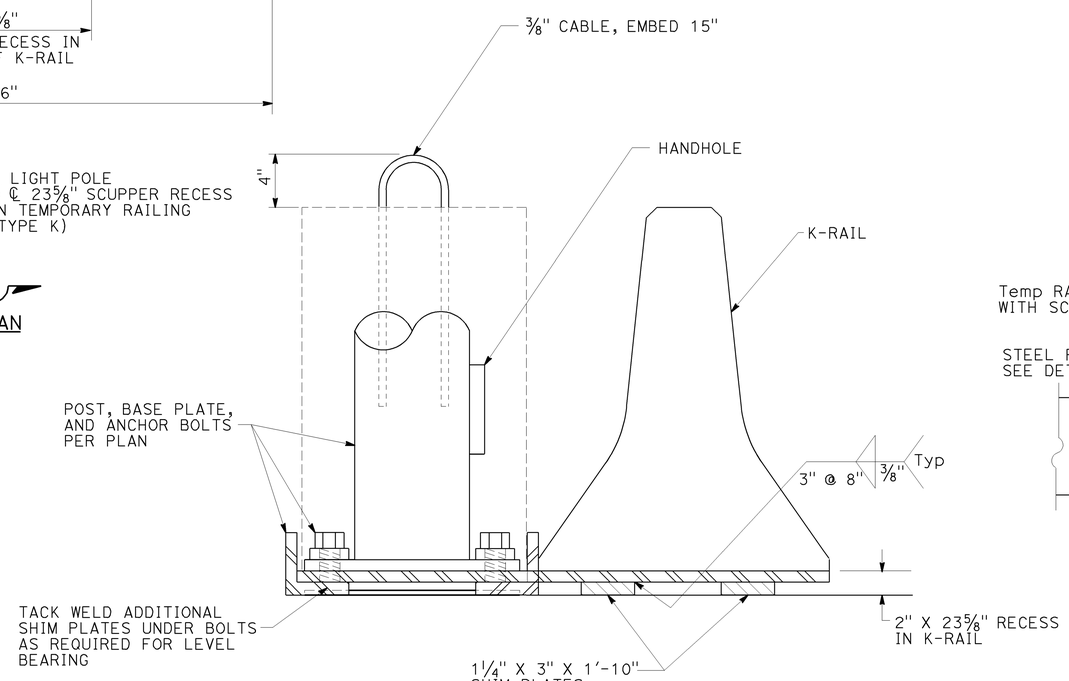

SECTION B-B

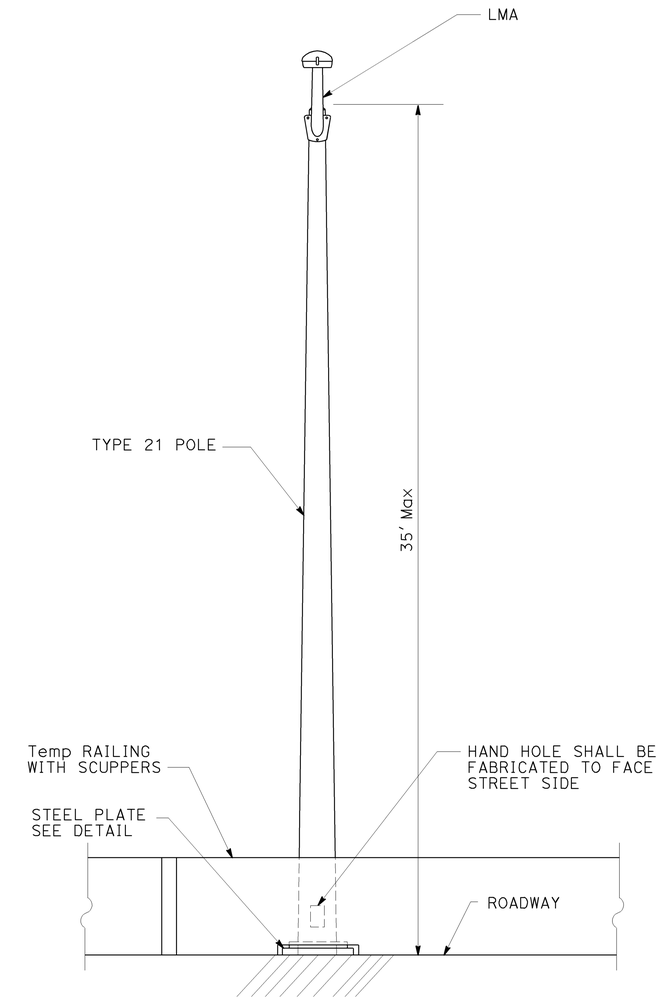

ELEVATION

TEMPORARY LIGHTING BASE TYPE 1 DETAIL

THIS PLAN IS ACCURATE FOR ELECTRICAL WORK ONLY.

LIGHTING (STAGE CONSTRUCTION) (DETAILS)

NO SCALE

E-17

STATE OF CALIFORNIA - DEPARTMENT OF TRANSPORTATION

Caltrans

CONSULTANT FUNCTIONAL SUPERVISOR: MARK J. ESPOSITO

CALCULATED-DESIGNED BY: GARY TOLMIE

CHECKED BY: ARMANDO SOLIS

REVISED BY | DATE REVISED

H:\pdata\10105878\Admin\submittals\2009-06-29 FINAL Submittal\100% ELECTRONIC SUBMITTAL - MERGED21-FDEES2009BYNTR-Traffic\c0F031ua017.dgn

LAST REVISION 08-01-08 | DATE PLOTTED => 21-DEC-2009 | TIME PLOTTED => 11:12

BORDER LAST REVISED 4/11/2008 | RELATIVE BORDER SCALE IS IN INCHES 0 1 2 3 | USERNAME => trcarol | DGN FILE => c0F031ua017.dgn | CU 12220 | EA 0F0311

Dist	COUNTY	ROUTE	POST MILES TOTAL PROJECT	SHEET No.	TOTAL SHEETS
12	Ora	57	16.2/18.6	578	960

REGISTERED CIVIL ENGINEER 7/15/09 DATE

12-14-09
PLANS APPROVAL DATE

REGISTERED PROFESSIONAL ENGINEER ARMANDO SOLIS No. 72012 Exp. 6-30-10 CIVIL STATE OF CALIFORNIA

THE STATE OF CALIFORNIA OR ITS OFFICERS OR AGENTS SHALL NOT BE RESPONSIBLE FOR THE ACCURACY OR COMPLETENESS OF SCANNED COPIES OF THIS PLAN SHEET.

RBF CONSULTING
14275 ALTON PKWY
IRVINE, CA 92618

OCTA
550 S. MAIN STREET
ORANGE, CA 92863

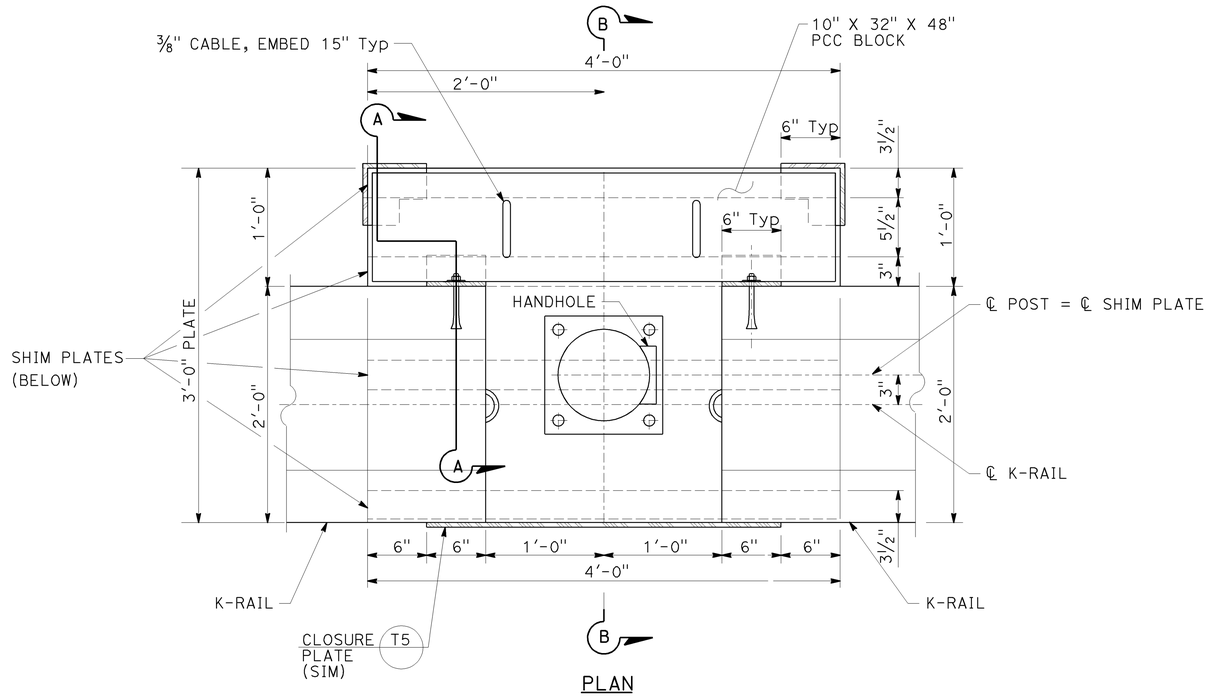

PLAN

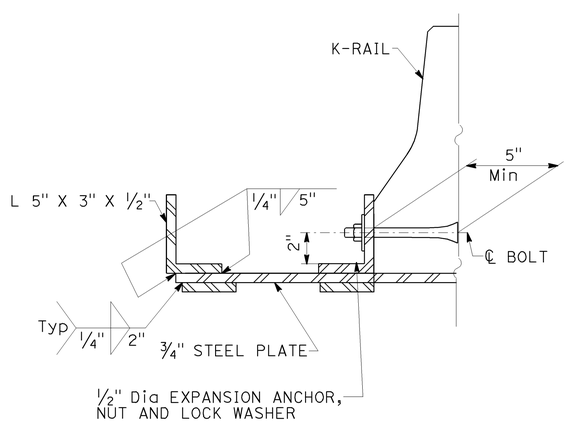

SECTION A-A

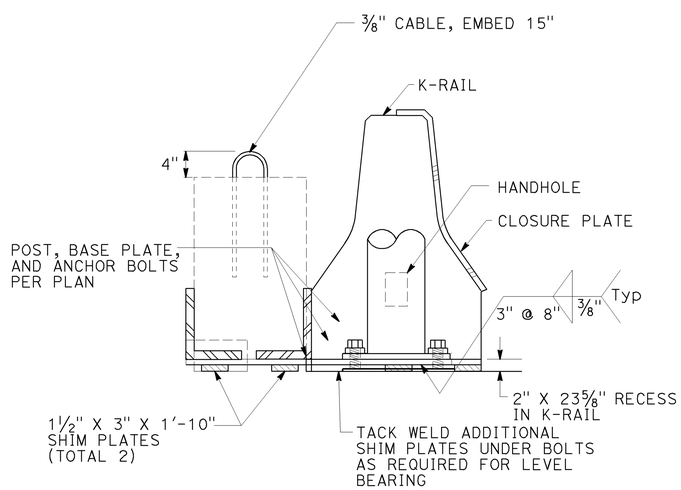

SECTION B-B

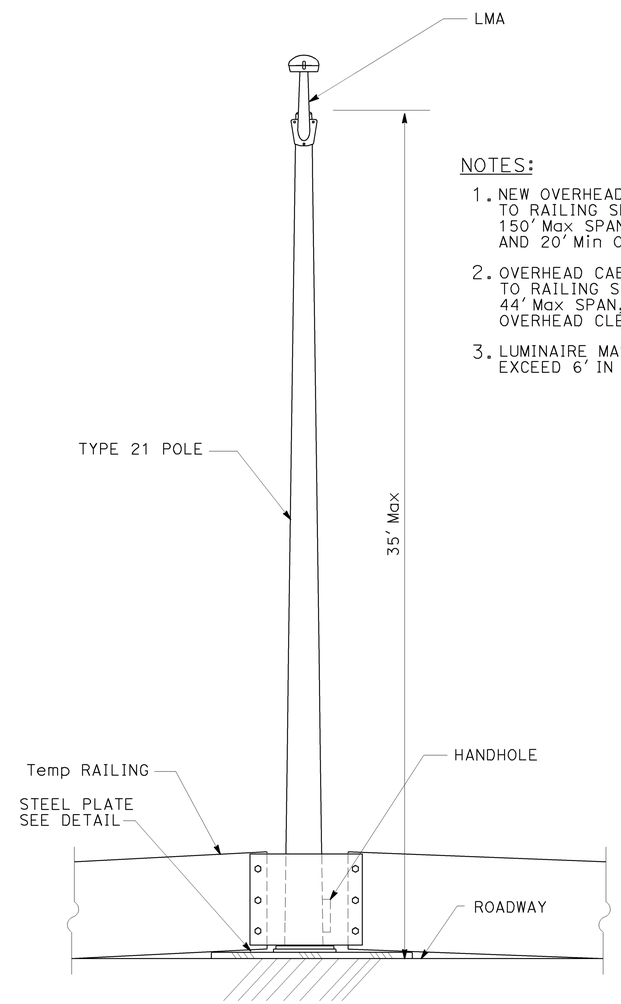

ELEVATION

NOTES:

1. NEW OVERHEAD CABLE SPANNING PARALLEL TO RAILING SHALL BE SLACK SPANNED WITH 150' Max SPAN BETWEEN POLES, 6' Min SAG AND 20' Min OVERHEAD CLEARANCE
2. OVERHEAD CABLE SPANNING PERPENDICULAR TO RAILING SHALL BE SLACK SPANED WITH 44' Max SPAN, 4' Min SAG AND 10' Min OVERHEAD CLEARANCE TO FIXED OBJECTS
3. LUMINAIRE MAST ARM (LMA) SHALL NOT EXCEED 6' IN LENGTH

TEMPORARY LIGHTING BASE TYPE 2 DETAIL

THIS PLAN IS ACCURATE FOR ELECTRICAL WORK ONLY.

LIGHTING (STAGE CONSTRUCTION) (DETAILS)

NO SCALE

E-18

LAST REVISION	08-01-08
DATE PLOTTED =>	21-DEC-2009
TIME PLOTTED =>	11:12

STATE OF CALIFORNIA - DEPARTMENT OF TRANSPORTATION

Caltrans

CONSULTANT FUNCTIONAL SUPERVISOR: MARK J. ESPOSITO

CALCULATED-DESIGNED BY: GARY TOLMIE

CHECKED BY: ARMANDO SOLIS

REVISED BY | DATE REVISED

H:\pdata\10105878\Admin\submittals\2009-06-29 FINAL Submittal\100% ELECTRONIC SUBMITTAL - MERGED01-FDEES2009BYNTR-Traffic\c0F031ua018.dgn

BORDER LAST REVISED 4/11/2008

RELATIVE BORDER SCALE IS IN INCHES 0 1 2 3

USERNAME => trcarol
DGN FILE => c0F031ua018.dgn

CU 12220

EA 0F0311

Dist	COUNTY	ROUTE	POST MILES TOTAL PROJECT	SHEET No.	TOTAL SHEETS
12	Ora	57	16.2/18.6	579	960

REGISTERED CIVIL ENGINEER 7/15/09 DATE

12-14-09
PLANS APPROVAL DATE

REGISTERED PROFESSIONAL ENGINEER ARMANDO SOLIS No. 72012 Exp. 6-30-10 CIVIL STATE OF CALIFORNIA

THE STATE OF CALIFORNIA OR ITS OFFICERS OR AGENTS SHALL NOT BE RESPONSIBLE FOR THE ACCURACY OR COMPLETENESS OF SCANNED COPIES OF THIS PLAN SHEET.

RBF CONSULTING
14275 ALTON PKWY
IRVINE, CA 92618

OCTA
550 S. MAIN STREET
ORANGE, CA 92863

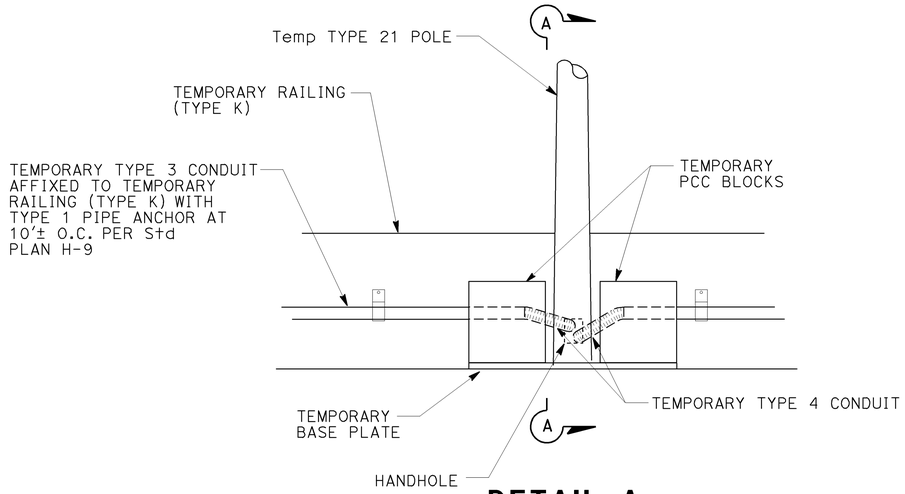

DETAIL A
TYPE 1 BASE

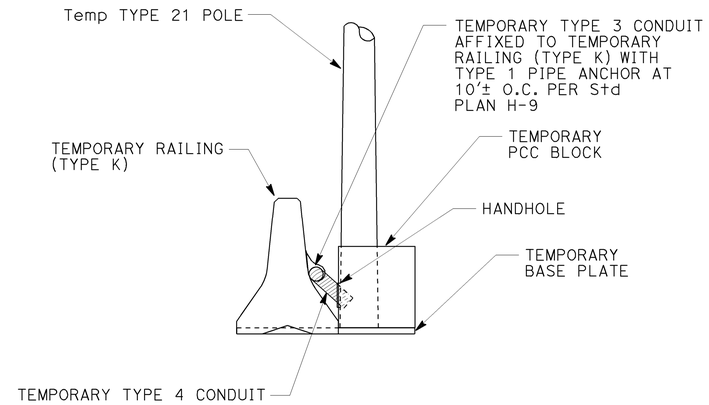

SECTION A-A

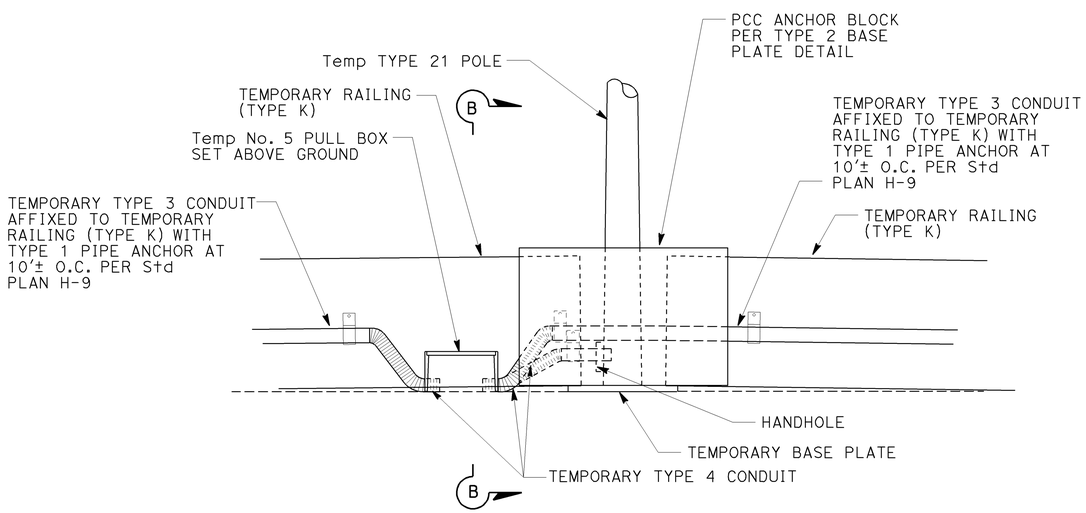

DETAIL B
TYPE 2 BASE

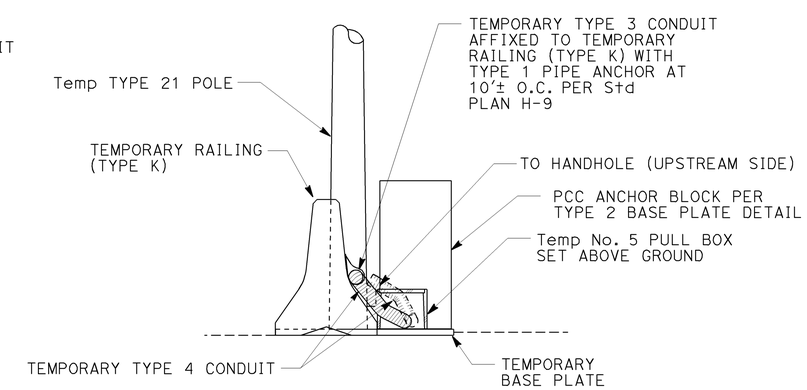

SECTION B-B

LIGHTING
(STAGE CONSTRUCTION)
(DETAILS)

NO SCALE

THIS PLAN IS ACCURATE FOR ELECTRICAL WORK ONLY.

E-19

STATE OF CALIFORNIA - DEPARTMENT OF TRANSPORTATION
Caltrans
CONSULTANT FUNCTIONAL SUPERVISOR: MARK J. ESPOSITO
CALCULATED-DESIGNED BY: GARY TOLMIE
CHECKED BY: ARMANDO SOLIS
REVISED BY / DATE REVISED

H:\pdata\10105878\Admin\submittals\2009-06-29 FINAL Submittal\100% ELECTRONIC SUBMITTAL - MERGED1-FDEES2009\Traffic\c0F031ua019.dgn

LAST REVISION 08-01-08 | DATE PLOTTED => 21-DEC-2009 | TIME PLOTTED => 11:12

Dist	COUNTY	ROUTE	POST MILES TOTAL PROJECT	SHEET No.	TOTAL SHEETS
12	Ora	57	16.2/18.6	580	960

REGISTERED CIVIL ENGINEER 7/15/09 DATE

12-14-09
PLANS APPROVAL DATE

REGISTERED PROFESSIONAL ENGINEER ARMANDO SOLIS No. 72012 Exp. 6-30-10 CIVIL STATE OF CALIFORNIA

THE STATE OF CALIFORNIA OR ITS OFFICERS OR AGENTS SHALL NOT BE RESPONSIBLE FOR THE ACCURACY OR COMPLETENESS OF SCANNED COPIES OF THIS PLAN SHEET.

RBF CONSULTING
14275 ALTON PKWY
IRVINE, CA 92618

OCTA
550 S. MAIN STREET
ORANGE, CA 92863

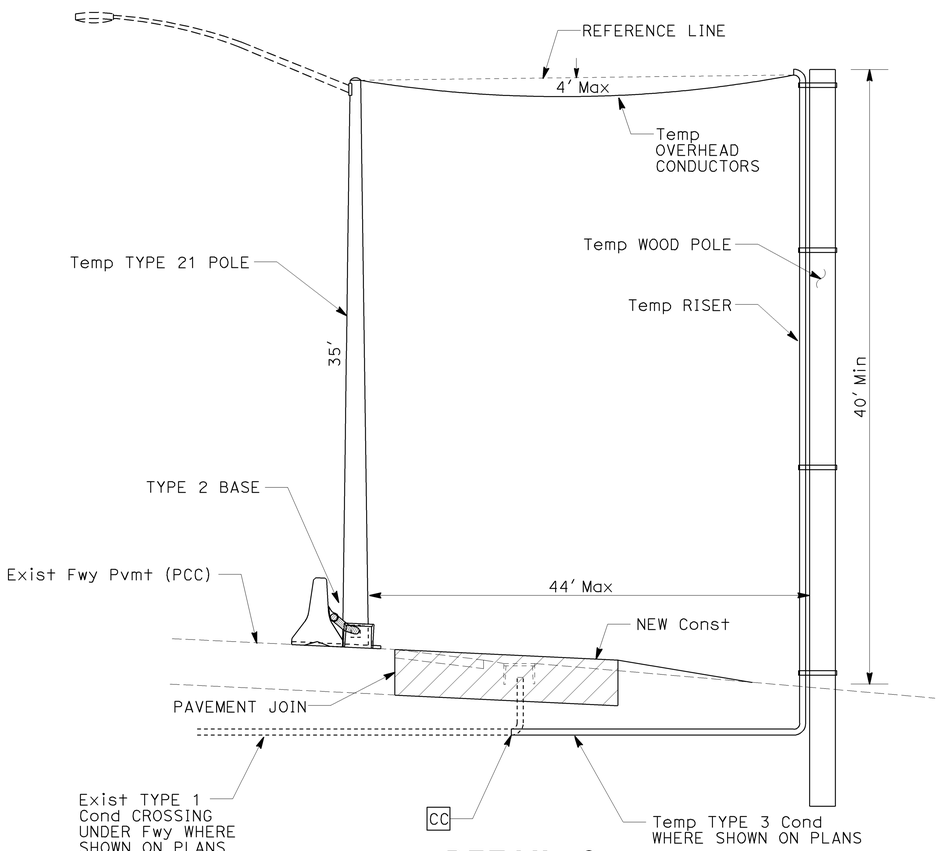

DETAIL C

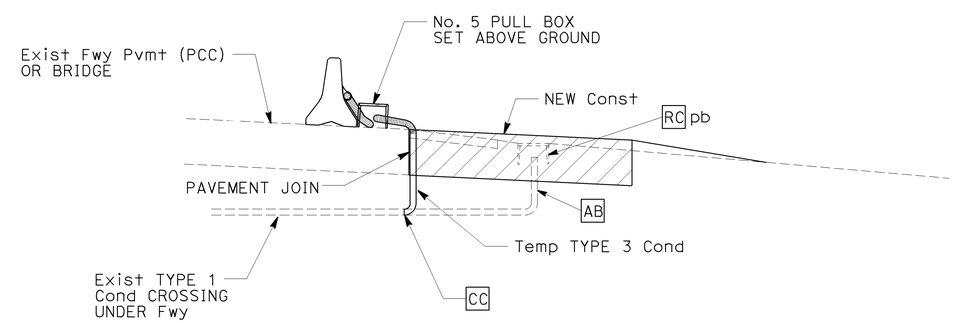

DETAIL D

LIGHTING (STAGE CONSTRUCTION)

(DETAILS)

NO SCALE

THIS PLAN IS ACCURATE FOR ELECTRICAL WORK ONLY.

E-20

STATE OF CALIFORNIA - DEPARTMENT OF TRANSPORTATION

Caltrans

CONSULTANT FUNCTIONAL SUPERVISOR: MARK J. ESPOSITO

CALCULATED-DESIGNED BY: GARY TOLMIE

CHECKED BY: ARMANDO SOLIS

REVISED BY

DATE REVISED

H:\pdata\10105878\Admin\submittals\2009-07-15 FINAL Electronic-Only Submittal\DGN\c0F031ua020.dgn

LAST REVISION 08-01-08 DATE PLOTTED => 21-DEC-2009 TIME PLOTTED => 11:12

Dist	COUNTY	ROUTE	POST MILES TOTAL PROJECT	SHEET No.	TOTAL SHEETS
12	Ora	57	16.2/18.6	581	960

REGISTERED CIVIL ENGINEER 7/15/09 DATE

12-14-09
PLANS APPROVAL DATE

REGISTERED PROFESSIONAL ENGINEER ARMANDO SOLIS No. 72012 Exp. 6-30-10 CIVIL STATE OF CALIFORNIA

THE STATE OF CALIFORNIA OR ITS OFFICERS OR AGENTS SHALL NOT BE RESPONSIBLE FOR THE ACCURACY OR COMPLETENESS OF SCANNED COPIES OF THIS PLAN SHEET.

RBF CONSULTING
14275 ALTON PKWY
IRVINE, CA 92618

OCTA
550 S. MAIN STREET
ORANGE, CA 92863

NOTES (THIS SHEET):

1. FOR LIGHTING AND SIGN ILLUMINATION WIRING DIAGRAM SEE SHEET E-30.
2. FOR OVERHEAD SIGNS SEE SIGN PLANS.
3. [3] [RC] EXISTING SIGN CONTROL AND PHOTOELECTRIC UNIT. INSTALL SC1A SIGN CONTROL.
4. FOR ACCURATE RIGHT OF WAY DATA, CONTACT RIGHT OF WAY ENGINEERING AT THE DISTRICT OFFICE.

LEGEND:

(X) SIGN IDENTIFICATION LETTER
(6B02) EXISTING IDENTIFICATION NUMBER
6A16 NEW IDENTIFICATION NUMBER

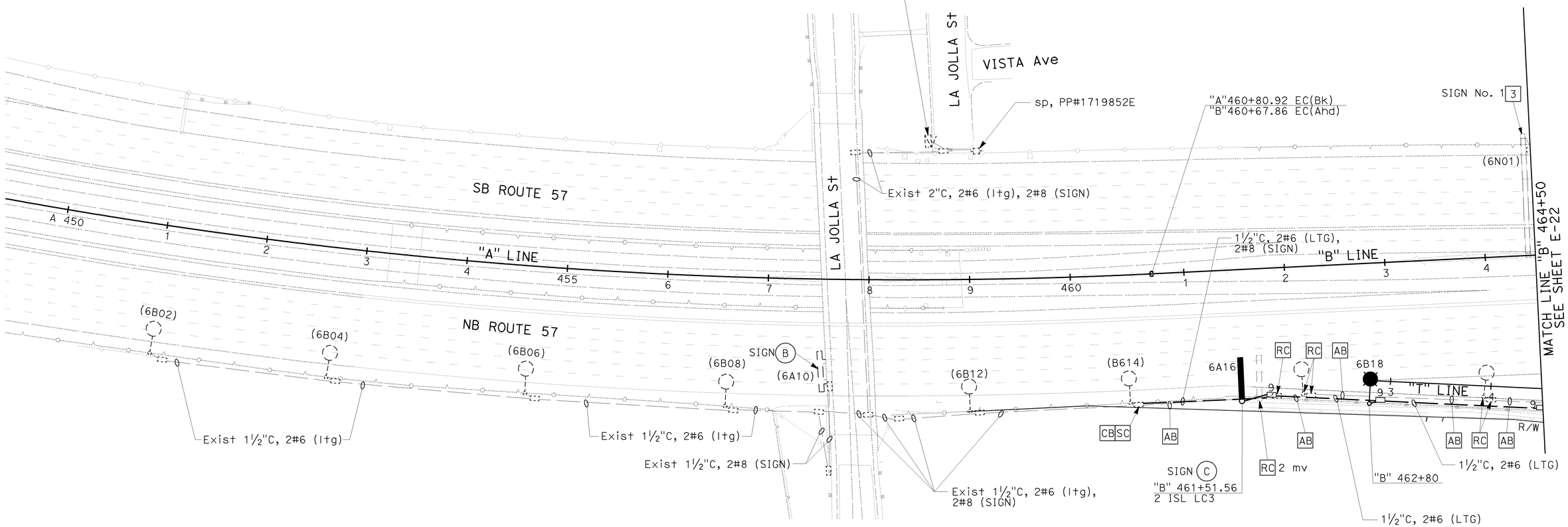

LIGHTING AND SIGN ILLUMINATION

SCALE: 1" = 50'

E-21

THIS PLAN IS ACCURATE FOR ELECTRICAL WORK ONLY.

STATE OF CALIFORNIA - DEPARTMENT OF TRANSPORTATION
Caltrans
CONSULTANT FUNCTIONAL SUPERVISOR: MARK J. ESPOSITO
CALCULATED-DESIGNED BY: GARY TOLMIE
CHECKED BY: ARMANDO SOLIS
REVISED BY / DATE REVISED

H:\pdata\10105878\Admin\submittals\2009-06-29 FINAL Submittal\100% ELECTRONIC SUBMITTAL - MERGED\c0F031ua021.dgn

LAST REVISION 08-01-08 | DATE PLOTTED => 21-DEC-2009 | TIME PLOTTED => 11:12

BORDER LAST REVISED 4/11/2008 | RELATIVE BORDER SCALE IS IN INCHES 0 1 2 3 | USERNAME => trcarol | DGN FILE => c0F031ua021.dgn | CU 12220 | EA 0F0311

Dist	COUNTY	ROUTE	POST MILES TOTAL PROJECT	SHEET No.	TOTAL SHEETS
12	Ora	57	16.2/18.6	582	960

REGISTERED CIVIL ENGINEER 7/15/09 DATE

12-14-09
PLANS APPROVAL DATE

REGISTERED PROFESSIONAL ENGINEER ARMANDO SOLIS No. 72012 Exp. 6-30-10 CIVIL STATE OF CALIFORNIA

THE STATE OF CALIFORNIA OR ITS OFFICERS OR AGENTS SHALL NOT BE RESPONSIBLE FOR THE ACCURACY OR COMPLETENESS OF SCANNED COPIES OF THIS PLAN SHEET.

RBF CONSULTING
14275 ALTON PKWY
IRVINE, CA 92618

OCTA
550 S. MAIN STREET
ORANGE, CA 92863

NOTES (THIS SHEET):

1. INSTALL 120/240 V TYPE III-BF SERVICE EQUIPMENT ENCLOSURE ON NEW FOUNDATION WITH THE FOLLOWING CIRCUIT BREAKERS:

   100 A 240 V 2P CB (MAIN)
   30 A 240 V 2P CB (LIGHTING)
   30 A 240 V 2P CB (SIGN ILLUMINATION)
   15 A 120 V 1P CB (LIGHTING CONTROL)
   30 A 120 V 1P CB (IRRIGATION)

2. RC EXISTING TYPE III SERVICE EQUIPMENT ENCLOSURE (ID #12-55-057-0-016.300). COORDINATE SERVICE CUTOVER WITH SOUTHERN CALIFORNIA EDISON COMPANY SERVICE PLANNER.

3. RC EXISTING SIGN CONTROL AND PHOTOELECTRIC UNIT. INSTALL NEW SC1A SIGN CONTROL.

4. INSTALL TYPE III-BF SERVICE EQUIPMENT ENCLOSURE (CITY) WITH THE FOLLOWING CIRCUIT BREAKERS:

   100 A 240 V 2P CB (MAIN)
   30 A 240 V 2P CB (SOFFIT LIGHTING)
   15 A 120 V 1P CB (LIGHTING CONTROL)

5. RC EXISTING CONDUCTORS.

6. FOR LIGHTING AND SIGN ILLUMINATION WIRING DIAGRAM SEE SHEET E-30.

7. FOR OVERHEAD SIGNS SEE SIGN PLANS.

8. FOR ACCURATE RIGHT OF WAY DATA, CONTACT RIGHT OF WAY ENGINEERING AT THE DISTRICT OFFICE.

9. RC PULL BOX AND INSTALL NEW PULL BOX IN PLACE.

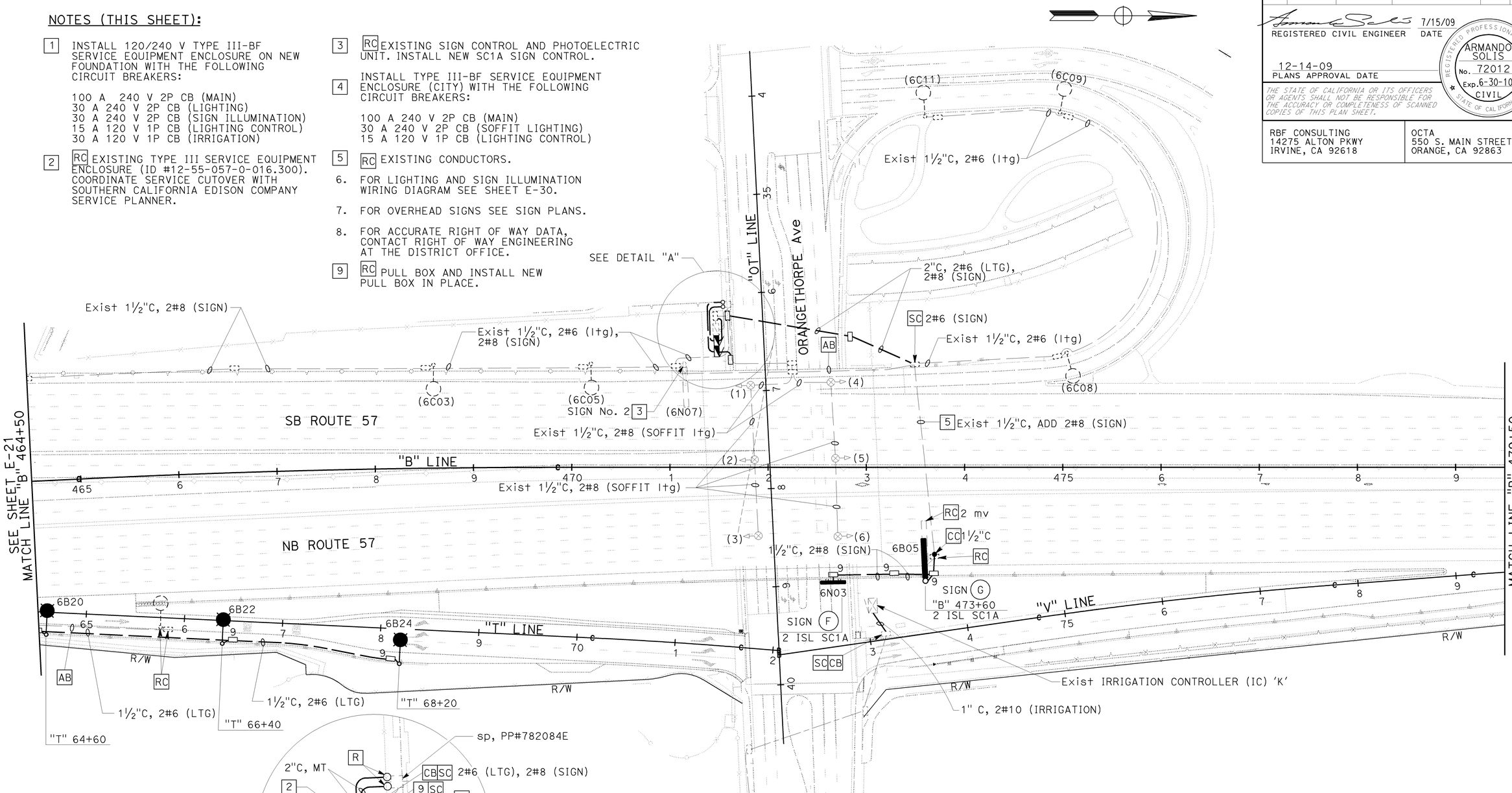

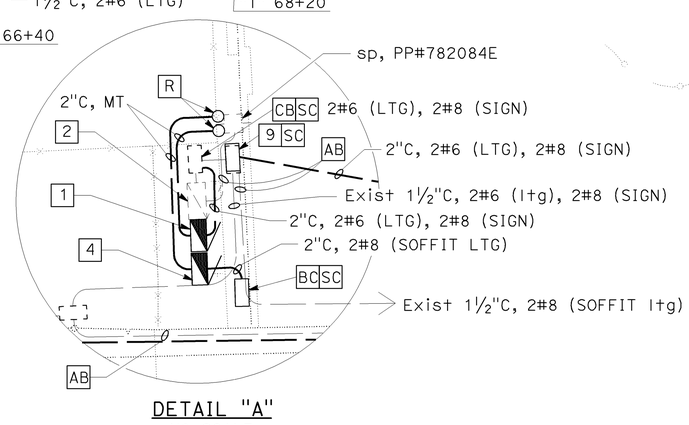

DETAIL "A"
NO SCALE

LIGHTING AND SIGN ILLUMINATION MODIFY ELECTRIC SERVICE (IRRIGATION)

SCALE: 1" = 50'

THIS PLAN IS ACCURATE FOR ELECTRICAL WORK ONLY.

E-22

STATE OF CALIFORNIA - DEPARTMENT OF TRANSPORTATION
Caltrans
CONSULTANT FUNCTIONAL SUPERVISOR: MARK J. ESPOSITO
CALCULATED-DESIGNED BY: GARY TOLMIE
CHECKED BY: ARMANDO SOLIS
REVISED BY
DATE REVISED

H:\pdata\10105878\Admin\submittals\2009-07-15 FINAL Electronic-Only Submittal\DGN-carb\PLOT File21-DEC-2009 c0f031ua022.dgn

LAST REVISION 08-01-08
DATE PLOTTED => 21-DEC-2009
TIME PLOTTED => 11:12

Dist	COUNTY	ROUTE	POST MILES TOTAL PROJECT	SHEET No.	TOTAL SHEETS
12	Ora	57	16.2/18.6	583	960

REGISTERED CIVIL ENGINEER 7/15/09 DATE

12-14-09
PLANS APPROVAL DATE

REGISTERED PROFESSIONAL ENGINEER ARMANDO SOLIS No. 72012 Exp. 6-30-10 CIVIL STATE OF CALIFORNIA

THE STATE OF CALIFORNIA OR ITS OFFICERS OR AGENTS SHALL NOT BE RESPONSIBLE FOR THE ACCURACY OR COMPLETENESS OF SCANNED COPIES OF THIS PLAN SHEET.

RBF CONSULTING
14275 ALTON PKWY
IRVINE, CA 92618

OCTA
550 S. MAIN STREET
ORANGE, CA 92863

NOTES (THIS SHEET):

1. INSTALL 120/240 V TYPE III-BF SERVICE EQUIPMENT ENCLOSURE (ID No. 12-55-057-0-016.600) WITH THE FOLLOWING CIRCUIT BREAKERS:

   100 A 240 V 2P CB (MAIN)
   30 A 240 V 2P CB (LIGHTING)
   30 A 240 V 2P CB (SIGN ILLUMINATION)
   15 A 120 V 1P CB (LIGHTING CONTROL)
   30 A 120 V 1P CB (CENSUS STATION)

2. INSTALL 120/240 V TYPE III-BF SERVICE EQUIPMENT ENCLOSURE (CITY) WITH THE FOLLOWING CIRCUIT BREAKERS:

   100 A 240 V 2P CB (MAIN)
   15 A 120 V 1P CB (LIGHTING CONTROL)
   30 A 240 V 2P CB (SOFFIT LIGHTS)

3. RC EXISTING TYPE SCE-1 SERVICE ON POWER POLE. COORDINATE SERVICE CUTOVER WITH SOUTHERN CALIFORNIA EDISON COMPANY SERVICE PLANNER.

4. RC EXISTING SIGN CONTROL AND PHOTOELECTRIC CELL. INSTALL SC1A SIGN CONTROL.

5. RC EXISTING CONDUCTORS.

6. FOR LIGHTING AND SIGN ILLUMINATION WIRING DIAGRAM SEE SHEET E-30.

7. FOR OVERHEAD SIGNS SEE SIGN PLANS.

8. FOR ACCURATE RIGHT OF WAY DATA, CONTACT RIGHT OF WAY ENGINEERING AT THE DISTRICT OFFICE.

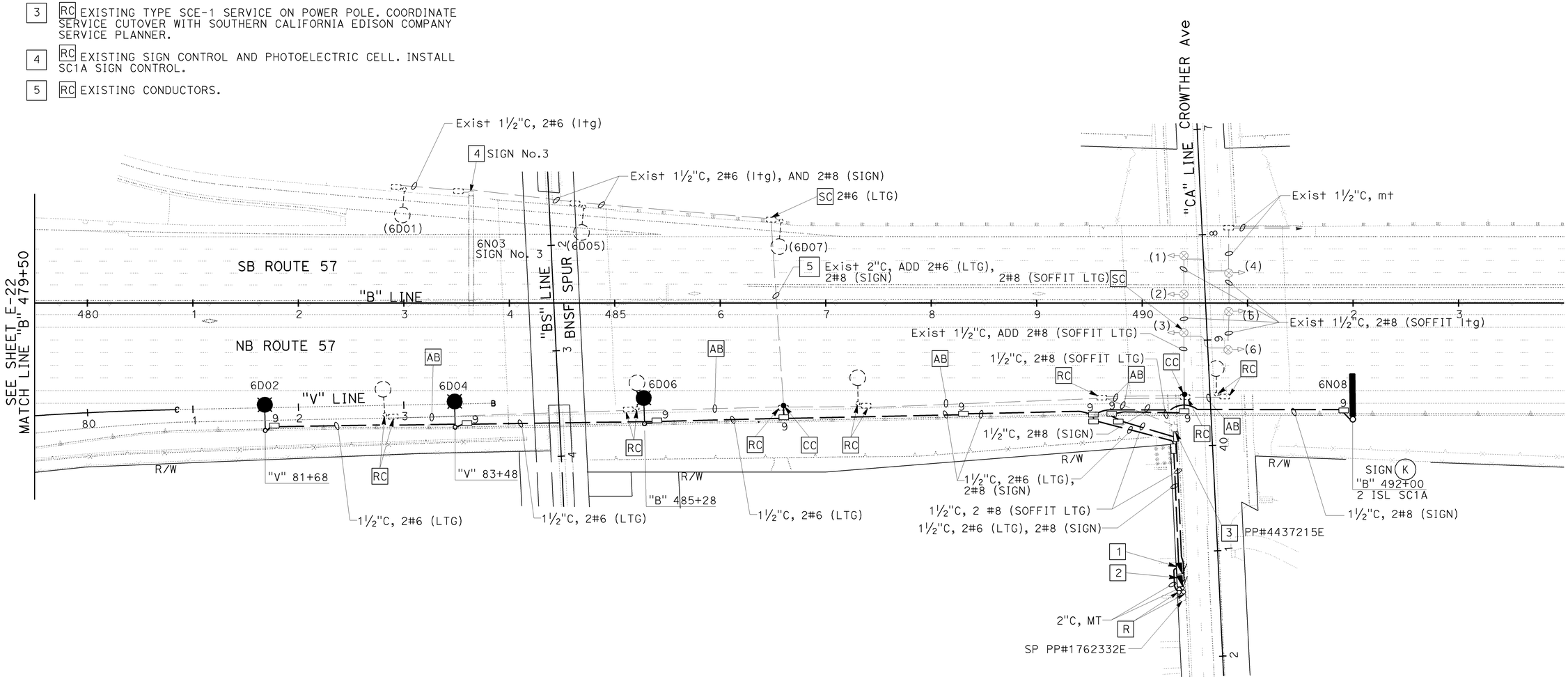

LIGHTING AND SIGN ILLUMINATION

SCALE: 1" = 50'

E-23

THIS PLAN IS ACCURATE FOR ELECTRICAL WORK ONLY.

STATE OF CALIFORNIA - DEPARTMENT OF TRANSPORTATION
Caltrans
CONSULTANT FUNCTIONAL SUPERVISOR: MARK J. ESPOSITO
CALCULATED-DESIGNED BY: GARY TOLMIE
CHECKED BY: ARMANDO SOLIS
REVISED BY / DATE REVISED

H:\pdata\10105878\Admin\submittals\2009-07-15 FINAL Electronic-Only Submittal\DGN and PLOT Files\2009-2009\c0f031ua023.dgn

LAST REVISION 08-01-08 | DATE PLOTTED => 21-DEC-2009 | TIME PLOTTED => 11:12

BORDER LAST REVISED 4/11/2008 | RELATIVE BORDER SCALE IS IN INCHES 0 1 2 3 | USERNAME => trcarol | DGN FILE => c0F031ua023.dgn | CU 12220 | EA 0F0311

Dist	COUNTY	ROUTE	POST MILES TOTAL PROJECT	SHEET No.	TOTAL SHEETS
12	Ora	57	16.2/18.6	584	960

REGISTERED CIVIL ENGINEER 7/15/09 DATE

12-14-09
PLANS APPROVAL DATE

REGISTERED PROFESSIONAL ENGINEER ARMANDO SOLIS No. 72012 Exp. 6-30-10 CIVIL STATE OF CALIFORNIA

THE STATE OF CALIFORNIA OR ITS OFFICERS OR AGENTS SHALL NOT BE RESPONSIBLE FOR THE ACCURACY OR COMPLETENESS OF SCANNED COPIES OF THIS PLAN SHEET.

RBF CONSULTING
14275 ALTON PKWY
IRVINE, CA 92618

OCTA
550 S. MAIN STREET
ORANGE, CA 92863

NOTES (THIS SHEET):

1. INTERCEPT EXISTING CONDUIT AND INSTALL 120/240 V TYPE III-BF SERVICE EQUIPMENT ENCLOSURE WITH THE FOLLOWING CIRCUIT BREAKERS:

   100 A 240 V 2P CB (MAIN)
   30 A 240 V 2P CB (LIGHTING)
   30 A 240 V 2P CB (SIGN ILLUMINATION)
   15 A 120 V 1P CB (LIGHTING/SIGN CONTROL)

2. ABANDON EXISTING TYPE SCE-1 SERVICE ON POWER POLE. COORDINATE SERVICE CUTOVER WITH SOUTHERN CALIFORNIA EDISON COMPANY SERVICE PLANNER.

3. RC EXISTING CONDUCTORS.

4. FOR LIGHTING AND SIGN ILLUMINATION WIRING DRIAGRAM SEE SHEET E-31.

5. FOR OVERHEAD SIGNS SEE SIGN PLANS.

6. FOR ACCURATE RIGHT OF WAY DATA, CONTACT RIGHT OF WAY ENGINEERING AT THE DISTRICT OFFICE.

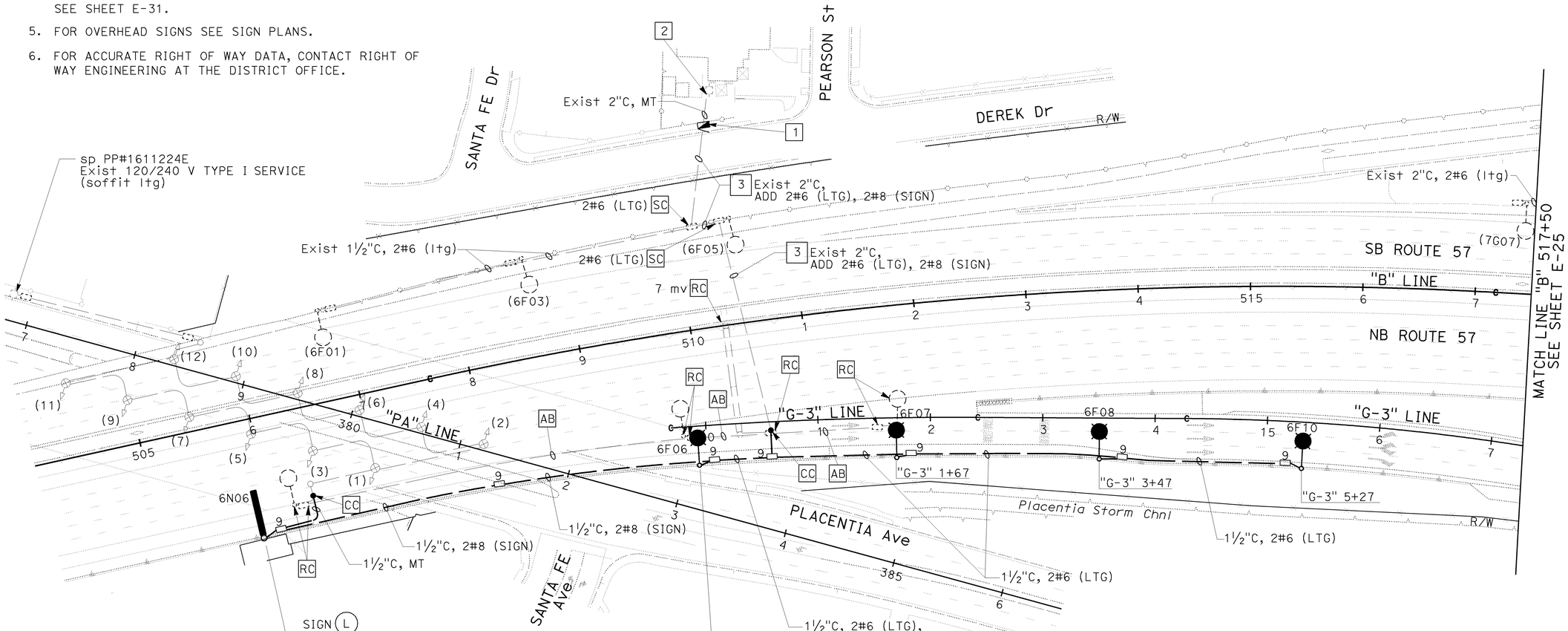

LIGHTING AND SIGN ILLUMINATION

SCALE: 1" = 50'

E-24

THIS PLAN IS ACCURATE FOR ELECTRICAL WORK ONLY.

STATE OF CALIFORNIA - DEPARTMENT OF TRANSPORTATION
Caltrans
CONSULTANT FUNCTIONAL SUPERVISOR: MARK J. ESPOSITO
CALCULATED-DESIGNED BY: GARY TOLMIE
CHECKED BY: ARMANDO SOLIS
REVISED BY / DATE REVISED

LAST REVISION 08-01-08
DATE PLOTTED => 21-DEC-2009
TIME PLOTTED => 11:13

H:\pdata\10105878\Admin\submittals\2009-06-29 FINAL Submittal\100% ELECTRONIC SUBMITTAL - MERGED\FDEES2009\Traffic\c0F031ua024.dgn

BORDER LAST REVISED 4/11/2008
RELATIVE BORDER SCALE IS IN INCHES 0 1 2 3
USERNAME => trcarol
DGN FILE => c0F031ua024.dgn
CU 12220
EA 0F0311

Dist	COUNTY	ROUTE	POST MILES TOTAL PROJECT	SHEET No.	TOTAL SHEETS
12	Ora	57	16.2/18.6	585	960

REGISTERED CIVIL ENGINEER 7/15/09 DATE

12-14-09
PLANS APPROVAL DATE

REGISTERED PROFESSIONAL ENGINEER ARMANDO SOLIS No. 72012 Exp. 6-30-10 CIVIL STATE OF CALIFORNIA

THE STATE OF CALIFORNIA OR ITS OFFICERS OR AGENTS SHALL NOT BE RESPONSIBLE FOR THE ACCURACY OR COMPLETENESS OF SCANNED COPIES OF THIS PLAN SHEET.

RBF CONSULTING
14275 ALTON PKWY
IRVINE, CA 92618

OCTA
550 S. MAIN STREET
ORANGE, CA 92863

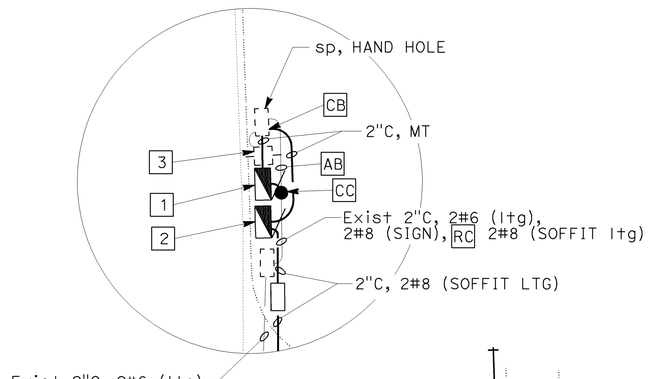

DETAIL "A"
NO SCALE

NOTES (THIS SHEET):

1. INSTALL 120/240 V TYPE III-BF SERVICE EQUIPMENT ENCLOSURE WITH THE FOLLOWING CIRCUIT BREAKERS:

   100 A 240 V 2P CB (MAIN)
   30 A 240 V 2P CB (LIGHTING)
   30 A 240 V 2P CB (SIGN ILLUMINATION)
   15 A 120 V 1P CB (LIGHTING/SIGN CONTROL)

2. INSTALL 120/240 V TYPE III-BF SERVICE EQUIPMENT ENCLOSURE (CITY) WITH THE FOLLOWING CIRCUIT BREAKERS:

   100 A 240 V 2P CB (MAIN)
   15 A 120 V 1P CB (LIGHTING CONTROL)
   30 A 240 V 2P CB (SOFFIT LIGHTING)

3. RC EXISTING TYPE I SERVICE, RISER AND WOOD POLE. COORDINATE REMOVAL AND SERVICE CUTOVER WITH SOUTHERN CALIFORNIA EDISON COMPANY SERVICE PLANNER.

4. RC EXISTING CONDUCTORS.

5. FOR LIGHTING AND SIGN ILLUMINATION WIRING DIAGRAM SEE SHEET E-31.

6. FOR OVERHEAD SIGNS SEE SIGN PLANS.

7. FOR ACCURATE RIGHT OF WAY DATA, CONTACT RIGHT OF WAY ENGINEERING AT THE DISTRICT OFFICE.

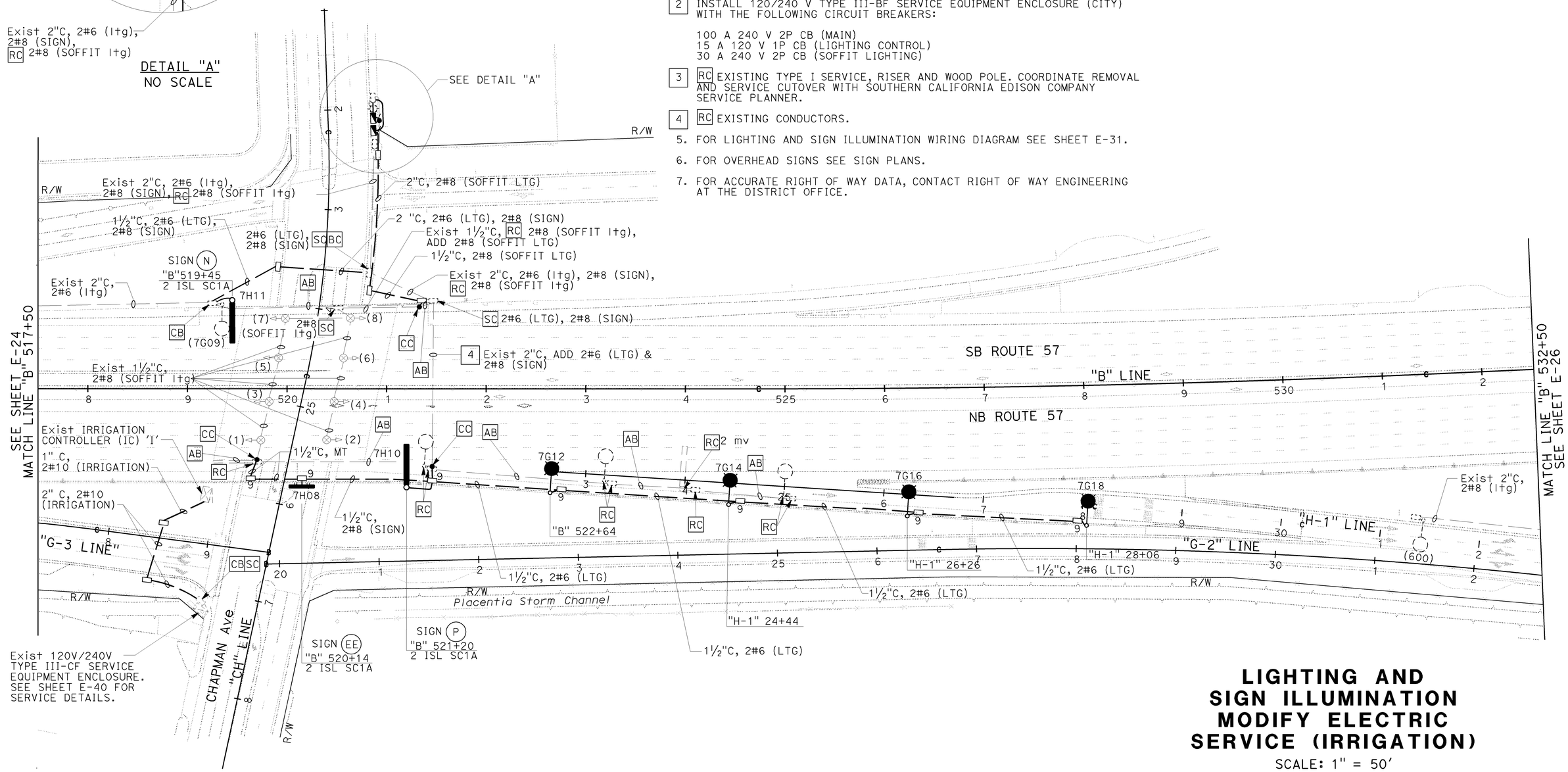

LIGHTING AND SIGN ILLUMINATION MODIFY ELECTRIC SERVICE (IRRIGATION)

SCALE: 1" = 50'

E-25

THIS PLAN IS ACCURATE FOR ELECTRICAL WORK ONLY.

STATE OF CALIFORNIA - DEPARTMENT OF TRANSPORTATION
Caltrans
CONSULTANT FUNCTIONAL SUPERVISOR: MARK J. ESPOSITO
CALCULATED-DESIGNED BY: ARMANDO SOLIS
CHECKED BY: GARY TOLMIE
REVISED BY / DATE REVISED

LAST REVISION 08-01-08
DATE PLOTTED => 21-DEC-2009
TIME PLOTTED => 11:13

H:\pdata\10105878\Admin\submittals\2009-07-15 FINAL Electronic-Only Submittal\DGN-cmb\PLOT File21-DEC-2009-09:06:12 c0f031ua025.dgn

BORDER LAST REVISED 4/11/2008
RELATIVE BORDER SCALE IS IN INCHES 0 1 2 3
USERNAME => trcarol
DGN FILE => c0F031ua025.dgn
CU 12220
EA 0F0311

Dist	COUNTY	ROUTE	POST MILES TOTAL PROJECT	SHEET No.	TOTAL SHEETS
12	Ora	57	16.2/18.6	586	960

REGISTERED CIVIL ENGINEER 7/15/09 DATE

12-14-09
PLANS APPROVAL DATE

REGISTERED PROFESSIONAL ENGINEER ARMANDO SOLIS No. 72012 Exp. 6-30-10 CIVIL STATE OF CALIFORNIA

THE STATE OF CALIFORNIA OR ITS OFFICERS OR AGENTS SHALL NOT BE RESPONSIBLE FOR THE ACCURACY OR COMPLETENESS OF SCANNED COPIES OF THIS PLAN SHEET.

RBF CONSULTING
14275 ALTON PKWY
IRVINE, CA 92618

OCTA
550 S. MAIN STREET
ORANGE, CA 92863

NOTES (THIS SHEET):

1 UNSPLICE EXISTING HIGHWAY LIGHTS AND LIGHTWEIGHT OVERHEAD SIGN CONDUCTORS FROM INTERSECTION SAFETY LIGHTS. INSTALL NEW 30 A 120 V 1P SAFETY LIGHTING CIRCUIT BREAKER ON METER A IN EXISTING SERVICE ENCLOSURE. RE-CIRCUIT LIGHTING AND SIGN CONDUCTORS TO NEW TYPE III-CF SERVICE ENCLOSURE FOR NB RAMP METERING SYSTEM. RE-CIRCUIT SOFFITLIGHTING CONDUCTORS TO NEW TYPE III-BF SERVICE ENCLOSURE.

2 EXISTING 120/240 V TYPE III-CF SERVICE EQUIPMENT ENCLOSURE WITH THE FOLLOWING CIRCUIT BREAKERS:

METER A (ID #12-55-057-0-017.602)
100 A 240 V 2P CB (MAIN)
50 A 120 V 1P CB (SB TRAFFIC SIGNAL)
20 A 120 V 1P CB (NB TRAFFIC SIGNAL)
30 A 120 V 1P CB (SAFETY LIGHTING)-(ADD)

UNMETERED
100 A 240 V 2P CB (MAIN)

METER B (ID #12-55-057-0-017.603)
100 A 240 V 2P CB (MAIN)
30 A 240 V 2P CB (SOFFIT LTG)-RC
40 A 240 V 2P CB (LIGHTING/SIGN)-RC
30 A 120 V 1P CB (RAMP METERING, SB)
20 A 120 V 1P CB (IRRIGATION)
30 A 120 V 1P CB (CCTV)(ADD)
15 A 120 V 1P CB (LIGHTING CONTROL)
30 A 120 V 1P CB (CCTV HIGH MAST MOTOR)(ADD)

3 RC EXISTING TYPE III-BF SERVICE ENCLOSURE (ID #12-55-057-0-017.602). COORDINATE REMOVAL AND SERVICE CUTOVER WITH SOUTHERN CALIFORNIA EDISON SERVICE PLANNER. INSTALL 120/240 V TYPE III-BF SERVICE EQUIPMENT ENCLOSURE ON EXISTING FOUNDATION WITH THE FOLLOWING CIRCUIT BREAKERS:

100 A 240 V 2P CB(MAIN)
30 A 120 V 1P CB (RAMP METERING)
30 A 240 V 2P CB (LIGHTING)
30 A 240 V 2P CB (SIGN ILLUMINATION)
15 A 120 V 1P CB (LIGHTING/SIGN CONTROL)
20 A 120 V 1P CB (IRRIGATION)

4 INSTALL 120/240 V TYPE III-BF SERVICE EQUIPMENT ENCLOSURE (CITY) WITH THE FOLLOWING CIRCUIT BREAKERS:

100 A 240 V 2P CB (MAIN)
30 A 240 V 2P CB (SOFFIT LIGHTING)
15 A 120 V 1P CB (LIGHTING CONTROL)

5 RC EXISTING CONDUCTORS.

6. FOR CIRCUIT DIAGRAM SEE SHEET E-32.

7. FOR OVERHEAD SIGNS SEE SIGN PLANS.

8. FOR ACCURATE RIGHT OF WAY DATA, CONTACT RIGHT OF WAY ENGINEERING AT THE DISTRICT OFFICE.

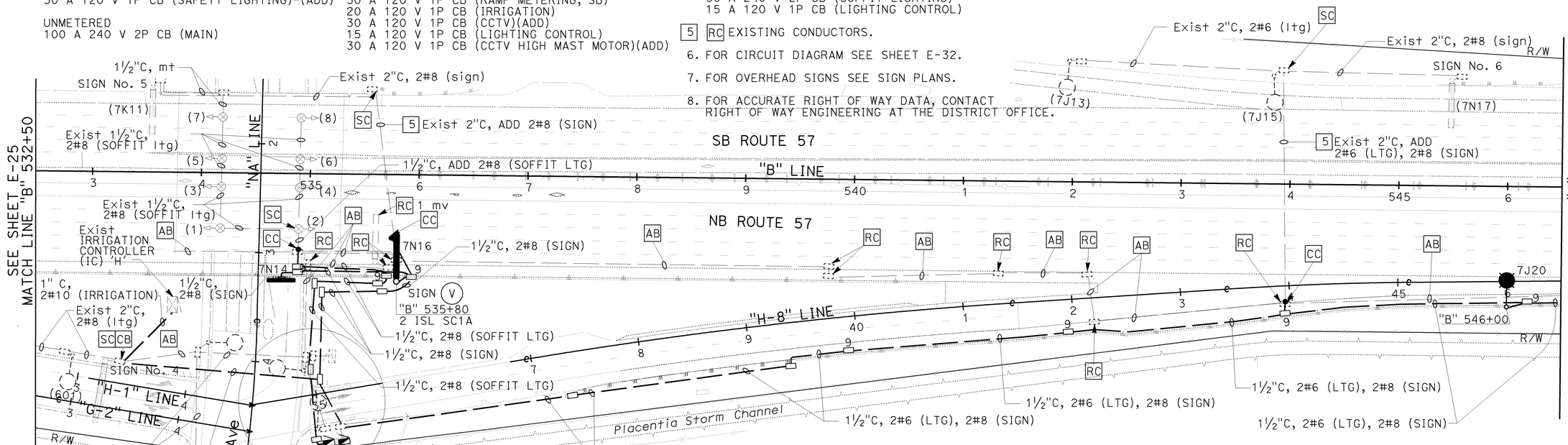

LIGHTING AND SIGN ILLUMINATION MODIFY ELECTRIC SERVICE (IRRIGATION)

SCALE: 1" = 50'

E-26

THIS PLAN IS ACCURATE FOR ELECTRICAL WORK ONLY.

STATE OF CALIFORNIA - DEPARTMENT OF TRANSPORTATION
Caltrans
CONSULTANT FUNCTIONAL SUPERVISOR: MARK J. ESPOSITO
CALCULATED-DESIGNED BY: ARMANDO SOLIS
CHECKED BY: GARY TOLMIE
REVISED BY / DATE REVISED

H:\pdata\10105878\Admin\submittals\2009-07-15 FINAL Electronic-Only Submittal\DGN and PLOT Files\2009-12-21\c0f031ua026.dgn

LAST REVISION DATE PLOTTED => 21-DEC-2009
TIME PLOTTED => 11:13
08-01-08

Dist	COUNTY	ROUTE	POST MILES TOTAL PROJECT	SHEET No.	TOTAL SHEETS
12	Ora	57	16.2/18.6	587	960

REGISTERED CIVIL ENGINEER 7/15/09 DATE

12-14-09
PLANS APPROVAL DATE

REGISTERED PROFESSIONAL ENGINEER ARMANDO SOLIS No. 72012 Exp. 6-30-10 CIVIL STATE OF CALIFORNIA

THE STATE OF CALIFORNIA OR ITS OFFICERS OR AGENTS SHALL NOT BE RESPONSIBLE FOR THE ACCURACY OR COMPLETENESS OF SCANNED COPIES OF THIS PLAN SHEET.

RBF CONSULTING
14275 ALTON PKWY
IRVINE, CA 92618

OCTA
550 S. MAIN STREET
ORANGE, CA 92863

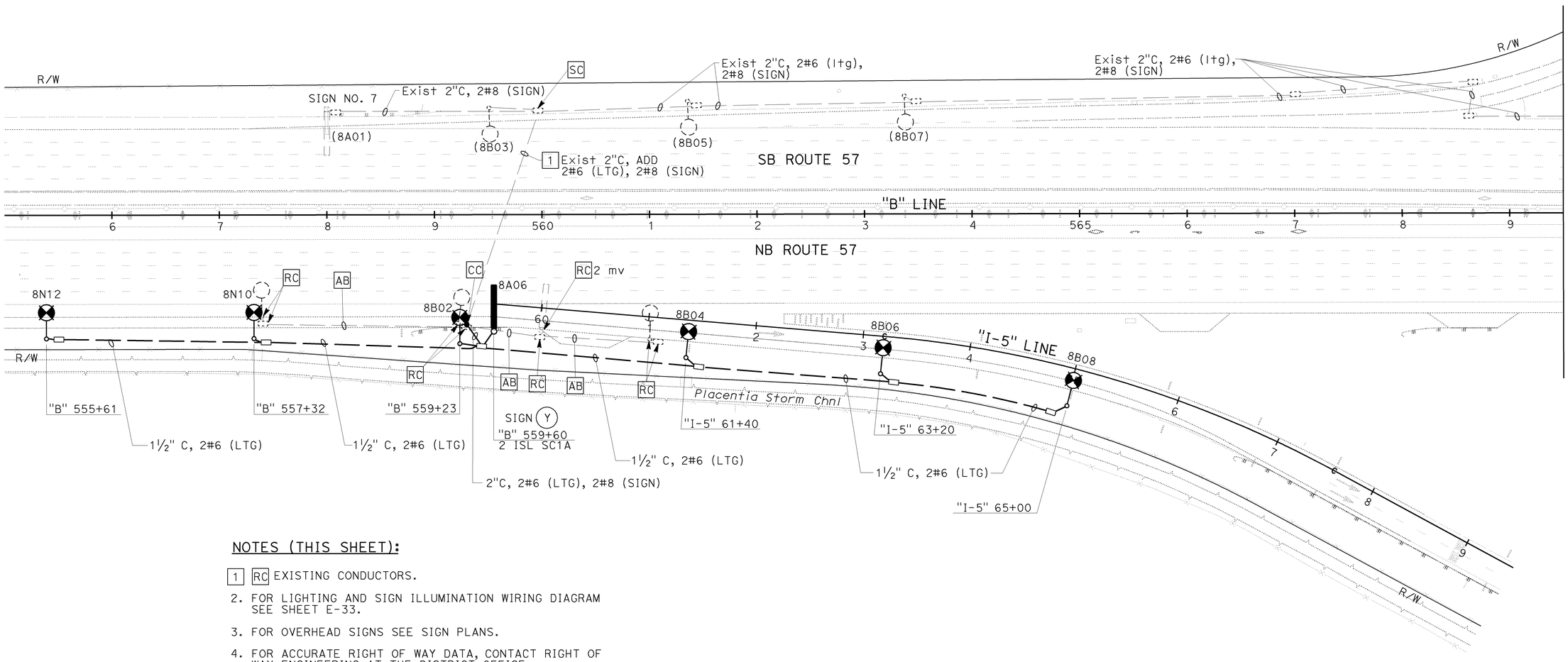

NOTES (THIS SHEET):

1 RC EXISTING CONDUCTORS.

2. FOR LIGHTING AND SIGN ILLUMINATION WIRING DIAGRAM SEE SHEET E-33.

3. FOR OVERHEAD SIGNS SEE SIGN PLANS.

4. FOR ACCURATE RIGHT OF WAY DATA, CONTACT RIGHT OF WAY ENGINEERING AT THE DISTRICT OFFICE.

LIGHTING AND SIGN ILLUMINATION

SCALE: 1" = 50'

E-27

THIS PLAN IS ACCURATE FOR ELECTRICAL WORK ONLY.

STATE OF CALIFORNIA - DEPARTMENT OF TRANSPORTATION

Caltrans

CONSULTANT FUNCTIONAL SUPERVISOR: MARK J. ESPOSITO

CALCULATED-DESIGNED BY: ARMANDO SOLIS

CHECKED BY

REVISED BY: GARY TOLMIE

DATE REVISED

H:\pdata\10105878\Admin\submittals\2009-06-29 FINAL Submittal\100% ELECTRONIC SUBMITTAL - MERGED01-FDEES20080YNTRCOFfic\c0F031ua027.dgn

LAST REVISION 08-01-08

DATE PLOTTED => 21-DEC-2009
TIME PLOTTED => 11:13

Dist	COUNTY	ROUTE	POST MILES TOTAL PROJECT	SHEET No.	TOTAL SHEETS
12	Ora	57	16.2/18.6	588	960

REGISTERED CIVIL ENGINEER 7/15/09 DATE

12-14-09
PLANS APPROVAL DATE

REGISTERED PROFESSIONAL ENGINEER ARMANDO SOLIS No. 72012 Exp. 6-30-10 CIVIL STATE OF CALIFORNIA

THE STATE OF CALIFORNIA OR ITS OFFICERS OR AGENTS SHALL NOT BE RESPONSIBLE FOR THE ACCURACY OR COMPLETENESS OF SCANNED COPIES OF THIS PLAN SHEET.

RBF CONSULTING
14275 ALTON PKWY
IRVINE, CA 92618

OCTA
550 S. MAIN STREET
ORANGE, CA 92863

NOTES (THIS SHEET):

1 EXISTING 120/240 V TYPE III-CF SERVICE EQUIPMENT ENCLOSURE WITH THE FOLLOWING CIRCUIT BREAKERS, INSTALL 30 A 2P SIGN ILLUMINATION CONTACTOR:

METER A (ID #12-55-057-0-018.350)
100 A 240 V 2P CB (MAIN)
50 A 120 V 1P CB (TRAFFIC SIGNAL)
20 A 120 V 1P CB (IISNS)
20 A 120 V 1P CB (SAFETY LIGHTS)(RELOCATED)

METER B (ID #12-55-057-0-018.351)
100 A 240 V 2P CB (MAIN)
40 A 240 V 2P CB (LIGHTING)(SPARE)
30 A 240 V 2P CB (SIGN ILLUMINATION)(SPARE)
30 A 120 V 1P CB (RAMP METERING, WB TO SB)
20 A 120 V 1P CB (FLASHING BEACON)(SPARE)
20 A 120 V 1P CB (TRAFFIC MONITORING STATION)
30 A 120 V 1P CB (RAMP METERING, EB TO SB)

UNMETERED
100 A 240 V 2P CB (MAIN)
20 A 120 V 1P CB (SAFETY LIGHTS)(RELOCATE TO METER A)
15 A 120 V 1P CB (LIGHTING CONTROL)

2 INSTALL LIGHTING AND SIGN ILLUMINATION CONDUCTORS IN EXISTING SERVICE ENCLOSURE AND CONNECT TO THE SPARE LIGHTING AND SIGN ILLUMINATION BREAKERS ON METER B, RESPECTIVELY

3 RC EXISTING TYPE SCE-1 SERVICE. COORIDNATE REMOVAL WITH SOUTHERN CALIFORNIA EDISON COMPANY SERVICE PLANNER

4 EXISTING 120/240 V TYPE III-CF SERVICE EQUIPMENT ENCLOSURE WITH THE FOLLOWING CIRCUIT BREAKERS:

METER A (ID # 12-55-057-0-018.330)
100 A 240 V 2P CB (MAIN)
50 A 120 V 1P CB (TRAFFIC SIGNAL)
20 A 120 V 1P CB (IISNS)
20 A 120 V 1P CB (SAFETY LIGHTING)(RELOCATED)

METER B (ID # 12-55-057-0-018.345)
100 A 240 V 2P CB (MAIN)
30 A 240 V 2P CB (RAMP METERING - EB TO NB)
30 A 120 V 1P CB (RAMP METERING - WB TO NB)
20 A 120 V 1P CB (IRRIGATION)
20 A 120 V 1P CB (CCTV)
40 A 240 V 2P CB (LIGHTING)(SPARE)

UNMETERED
100 A 240 V 2P CB (MAIN)
15 A 120 V 1P CB (LIGHTING CONTROL)
20 A 120 V 1P CB (SAFETY LIGHTING)(RELOCATED TO METER A)

5 INSTALL LIGHTING CONDUCTORS IN EXISTING SERVICE ENCLOSURE AND CONNECT TO SPARE LIGHTING BREAKER ON METER B.

6. FOR LIGHTING AND SIGN ILLUMINATION WIRING DIAGRAM SEE SHEET E-33

7. FOR ACCURATE RIGHT OF WAY DATA, CONTACT RIGHT OF WAY ENGINEERING AT THE DISTRICT OFFICE.

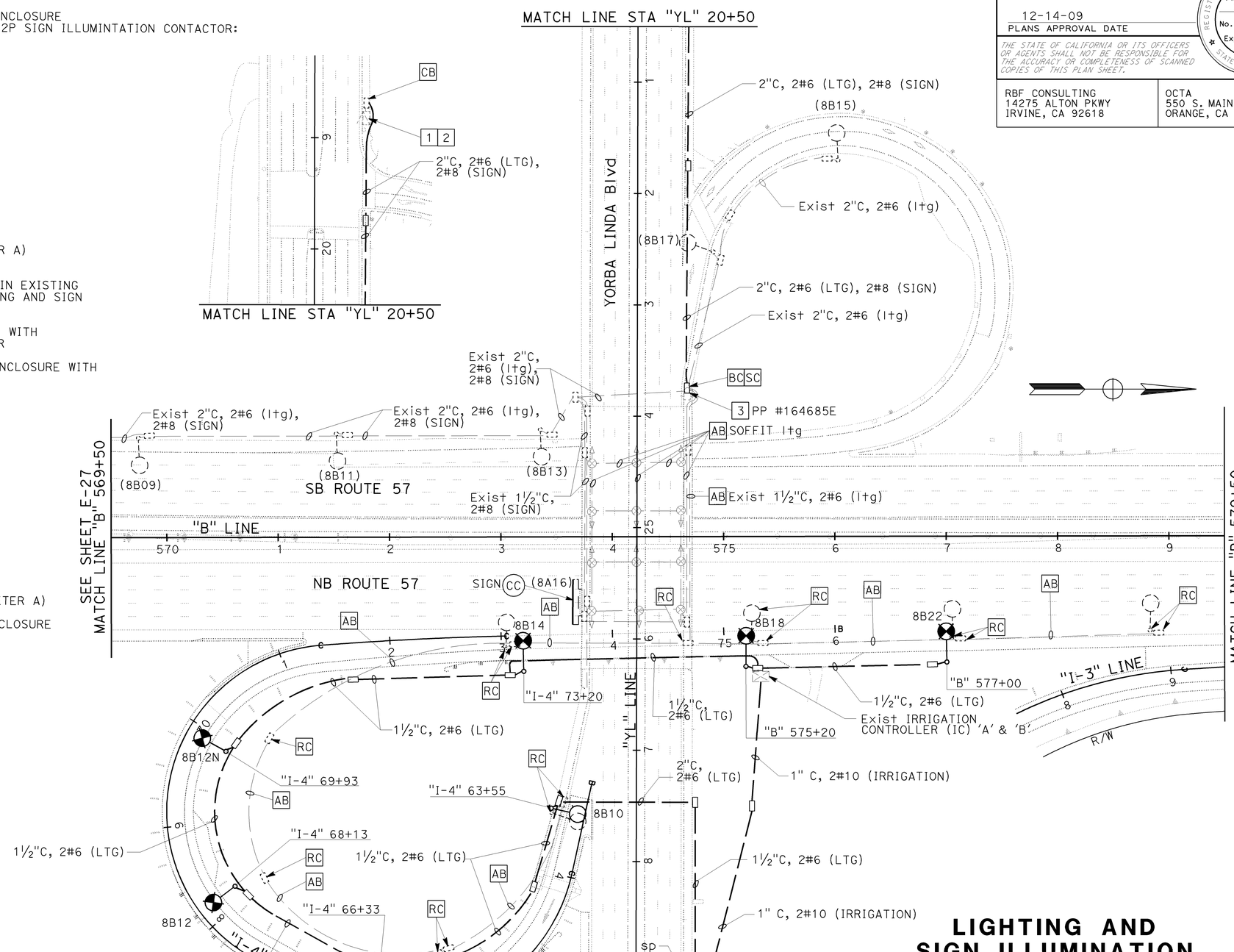

LIGHTING AND SIGN ILLUMINATION MODIFY ELECTRIC SERVICE (IRRIGATION)

SCALE: 1" = 50'

THIS PLAN IS ACCURATE FOR ELECTRICAL WORK ONLY.

E-28

STATE OF CALIFORNIA - DEPARTMENT OF TRANSPORTATION
Caltrans
CONSULTANT FUNCTIONAL SUPERVISOR: MARK J. ESPOSITO
CALCULATED-DESIGNED BY: GARY TOLMIE
CHECKED BY: ARMANDO SOLIS
REVISED BY / DATE REVISED

LAST REVISION 08-01-08 DATE PLOTTED => 21-DEC-2009 TIME PLOTTED => 10:39

H:\pdata\10105878\Admin\submittals\2009-07-15 FINAL Electronic-Only Submittal\DGN\trmnguye\PLOT File21-DEC-2009\c0F031ua028.dgn

BORDER LAST REVISED 4/11/2008 | RELATIVE BORDER SCALE IS IN INCHES 0 1 2 3 | USERNAME => trmnguye DGN FILE => c0F031ua028.dgn | CU 12220 | EA 0F0311

Dist	COUNTY	ROUTE	POST MILES TOTAL PROJECT	SHEET No.	TOTAL SHEETS
12	Ora	57	16.2/18.6	589	960

REGISTERED CIVIL ENGINEER 7/15/09 DATE

12-14-09
PLANS APPROVAL DATE

REGISTERED PROFESSIONAL ENGINEER ARMANDO SOLIS No. 72012 Exp. 6-30-10 CIVIL STATE OF CALIFORNIA

THE STATE OF CALIFORNIA OR ITS OFFICERS OR AGENTS SHALL NOT BE RESPONSIBLE FOR THE ACCURACY OR COMPLETENESS OF SCANNED COPIES OF THIS PLAN SHEET.

RBF CONSULTING
14275 ALTON PKWY
IRVINE, CA 92618

OCTA
550 S. MAIN STREET
ORANGE, CA 92863

NOTES (THIS SHEET):

1 EXISTING 120/240 V TYPE III-CF SERVICE EQUIPMENT ENCLOSURE WITH THE WITH FOLLOWING CIRCUIT BREAKERS:

METER A (ID #12-55-057-0-018.501)
200 A 240 V 2P CB(MAIN)
15 A 120 V 1P CB (LIGHTING CONTROL)(RELOCATED)
70 A 120 V 1P CB (CMS)
70 A 120 V 1P CB (CMS)
70 A 120 V 1P CB (CMS)
70 A 240 V 3P CB (CMS)
30 A 120 V 1P CB (334 CMS CABINET)

METER B (ID #12-55-057-0-018.499)
100 A 240 V 2P CB (MAIN)
50 A 240 V 2P CB (LIGHTING)
15 A 120 V 1P CB (LIGHTING CONTROL)(RELOCATE TO METER A)
30 A 240 V 2P CB (SIGN ILLUMINATION)(ADD)
30 A 2P (CONTACTOR FOR SIGN ILLUMINATION)(ADD)
15 A 120 V 1P CB (SIGN ILLUMINATION CONTROL)(ADD)

2 RC EXISTING CONDUCTORS.

3. FOR LIGHTING AND SIGN ILLUMINATION WIRING DIAGRAM SEE SHEET E-33.

4. FOR ACCURATE RIGHT OF WAY DATA, CONTACT RIGHT OF WAY ENGINEERING AT THE DISTRICT OFFICE.

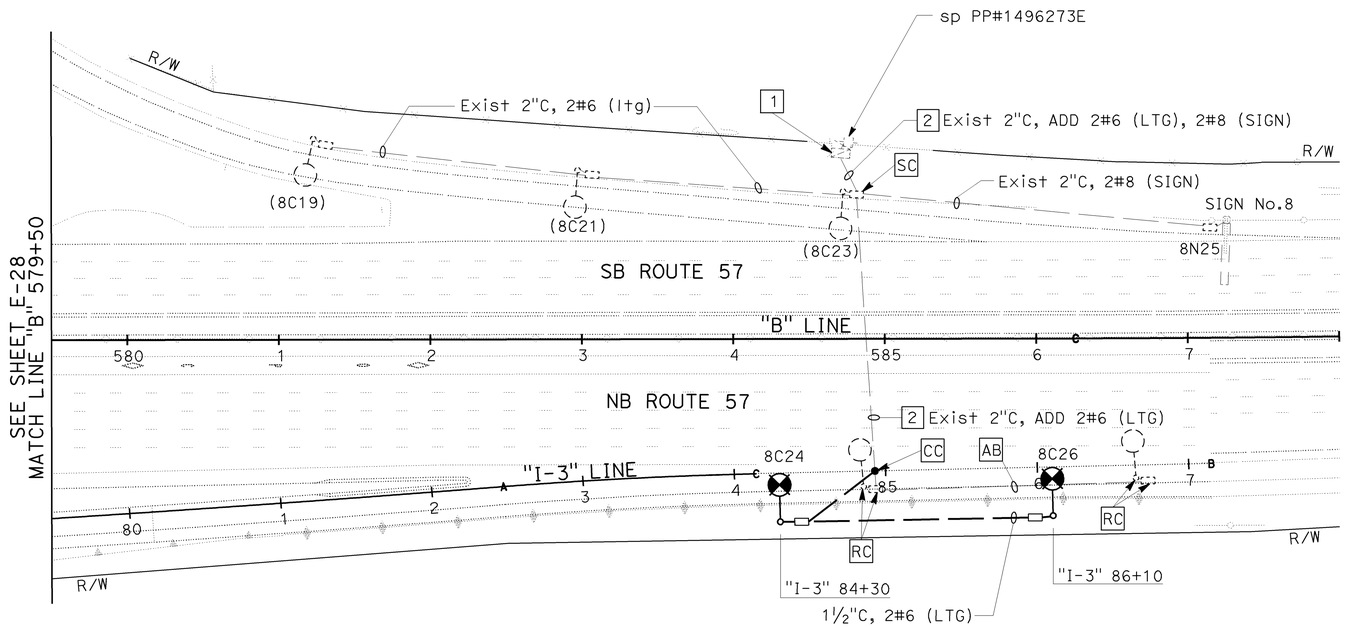

LIGHTING AND SIGN ILLUMINATION

SCALE: 1" = 50'

THIS PLAN IS ACCURATE FOR ELECTRICAL WORK ONLY.

E-29

STATE OF CALIFORNIA - DEPARTMENT OF TRANSPORTATION
Caltrans
CONSULTANT FUNCTIONAL SUPERVISOR: MARK J. ESPOSITO
CALCULATED-DESIGNED BY: GARY TOLMIE
CHECKED BY: ARMANDO SOLIS
REVISED BY / DATE REVISED

LAST REVISION 08-01-08
DATE PLOTTED => 21-DEC-2009
TIME PLOTTED => 10:39

H:\pdata\10105878\Admin\submittals\2009-06-29 FINAL Submittal\100% ELECTRONIC SUBMITTAL - MERGED1-DEES2009BY\Traffic\c0F031ua029.dgn

BORDER LAST REVISED 4/11/2008
RELATIVE BORDER SCALE IS IN INCHES 0 1 2 3
USERNAME => trmnguye
DGN FILE => c0F031ua029.dgn
CU 12220
EA 0F0311

Dist	COUNTY	ROUTE	POST MILES TOTAL PROJECT	SHEET No.	TOTAL SHEETS
12	Ora	57	16.2/18.6	590	960

REGISTERED CIVIL ENGINEER 7/15/09 DATE

12-14-09
PLANS APPROVAL DATE

REGISTERED PROFESSIONAL ENGINEER ARMANDO SOLIS No. 72012 Exp. 6-30-10 CIVIL STATE OF CALIFORNIA

THE STATE OF CALIFORNIA OR ITS OFFICERS OR AGENTS SHALL NOT BE RESPONSIBLE FOR THE ACCURACY OR COMPLETENESS OF SCANNED COPIES OF THIS PLAN SHEET.

RBF CONSULTING
14275 ALTON PKWY
IRVINE, CA 92618

OCTA
550 S. MAIN STREET
ORANGE, CA 92863

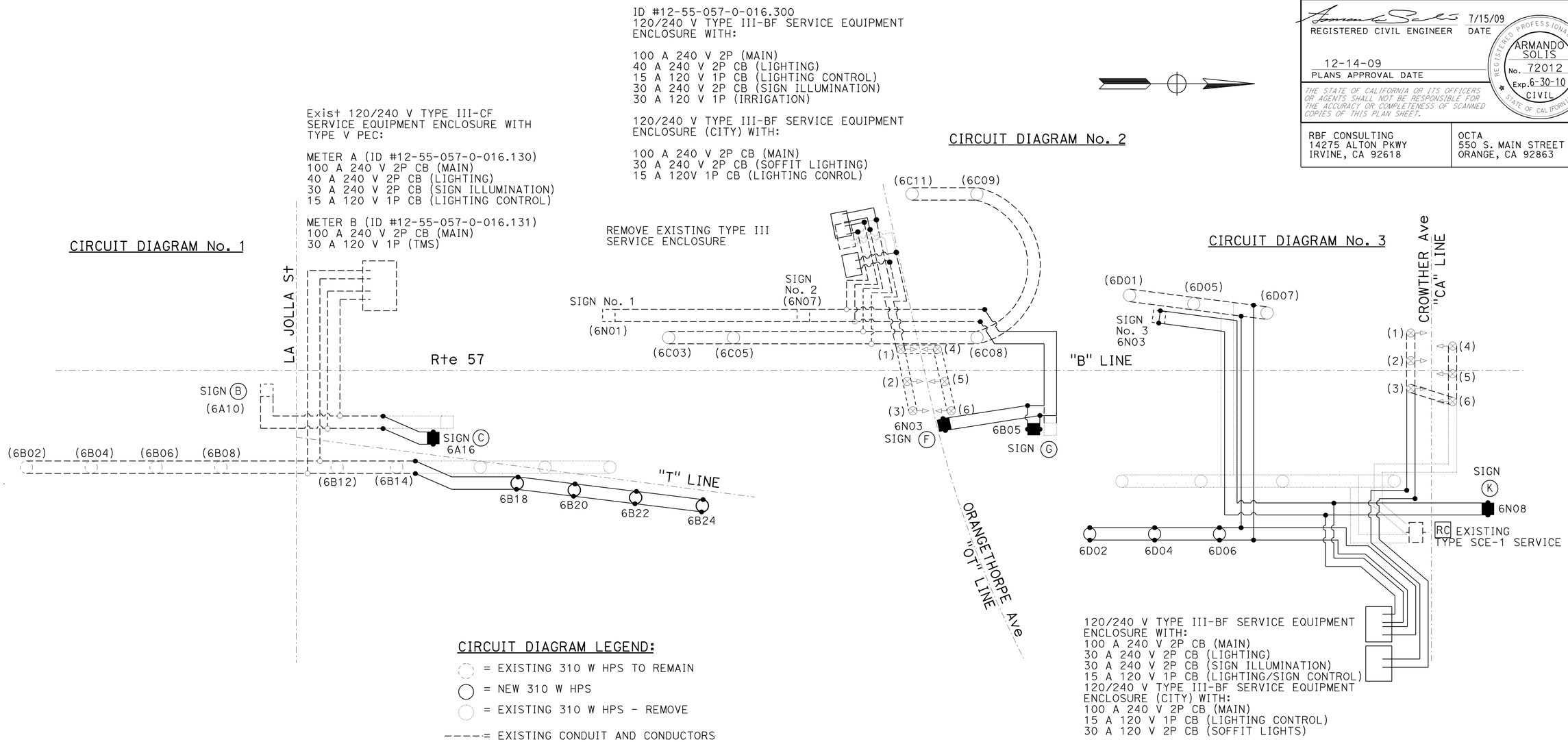

CIRCUIT DIAGRAM LEGEND:

- = EXISTING 310 W HPS TO REMAIN
- = NEW 310 W HPS
- = EXISTING 310 W HPS - REMOVE
- = EXISTING CONDUIT AND CONDUCTORS
- = NEW CONDUIT AND CONDUCTORS
- = EXISTING CONDUIT AND CONDUCTORS TO BE ABANDONED
- = EXISTING OVERHEAD SIGN
- = NEW OVERHEAD SIGN
- = EXISTING OVERHEAD SIGN - REMOVE
- = EXISTING SPLICE
- = NEW SPLICE
- 6B00 = IDENTIFICATION NUMBER (NEW)
- (6B01)= IDENTIFICATION NUMBER (EXISTING)
- (A) = OVERHEAD SIGN IDENTIFICATION

LIGHTING AND SIGN ILLUMINATION
(WIRING DIAGRAM)

NO SCALE

E-30

THIS PLAN IS ACCURATE FOR ELECTRICAL WORK ONLY.

STATE OF CALIFORNIA - DEPARTMENT OF TRANSPORTATION
Caltrans

CONSULTANT FUNCTIONAL SUPERVISOR: MARK J. ESPOSITO
CALCULATED-DESIGNED BY: ARMANDO SOLIS
CHECKED BY: GARY TOLMIE
REVISED BY
DATE REVISED

H:\pdata\10105878\Admin\submittals\2009-07-15 FINAL Electronic-Only Submittal\DGN\trmnguye PLOT File21-DEC-2009 16:10 c0f031ua030.dgn

LAST REVISION 08-01-08 | DATE PLOTTED => 21-DEC-2009 | TIME PLOTTED => 10:39

Dist	COUNTY	ROUTE	POST MILES TOTAL PROJECT	SHEET No.	TOTAL SHEETS
12	Ora	57	16.2/18.6	591	960

REGISTERED CIVIL ENGINEER 7/15/09 DATE

12-14-09
PLANS APPROVAL DATE

REGISTERED PROFESSIONAL ENGINEER ARMANDO SOLIS No. 72012 Exp. 6-30-10 CIVIL STATE OF CALIFORNIA

THE STATE OF CALIFORNIA OR ITS OFFICERS OR AGENTS SHALL NOT BE RESPONSIBLE FOR THE ACCURACY OR COMPLETENESS OF SCANNED COPIES OF THIS PLAN SHEET.

RBF CONSULTING
14275 ALTON PKWY
IRVINE, CA 92618

OCTA
550 S. MAIN STREET
ORANGE, CA 92863

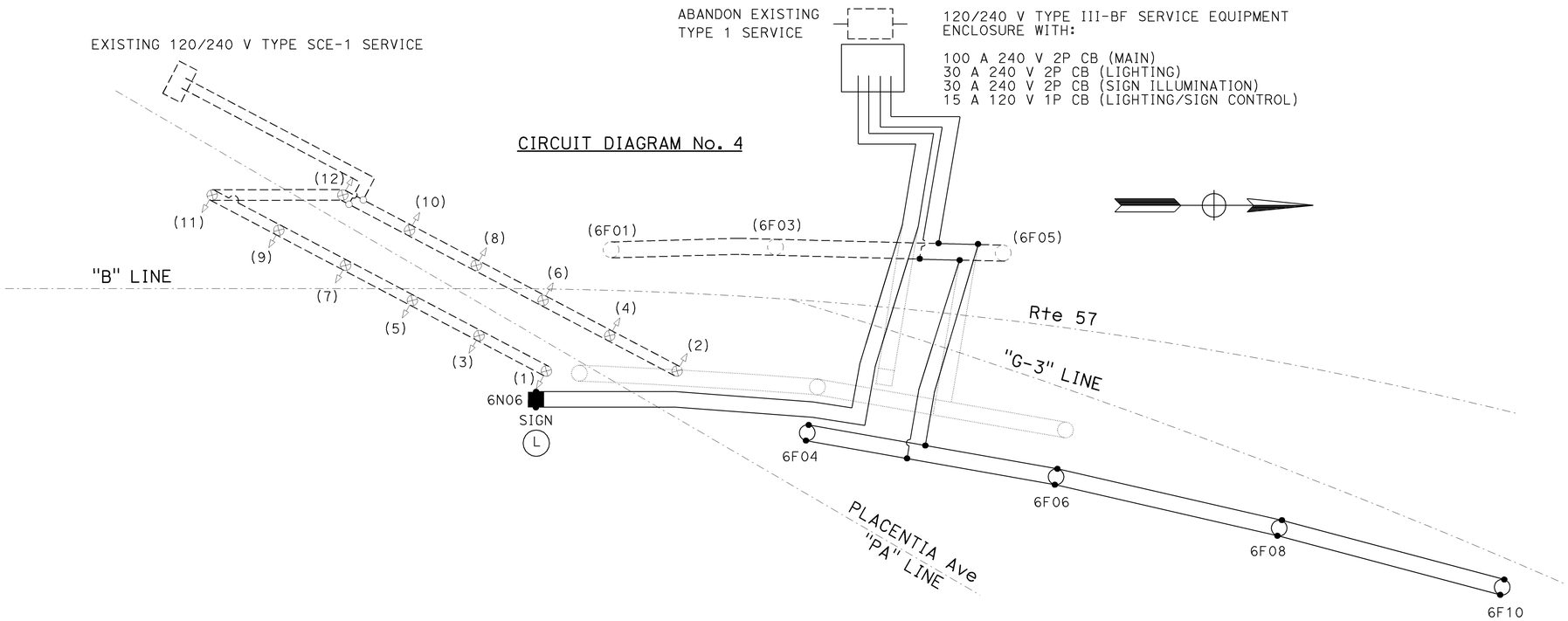

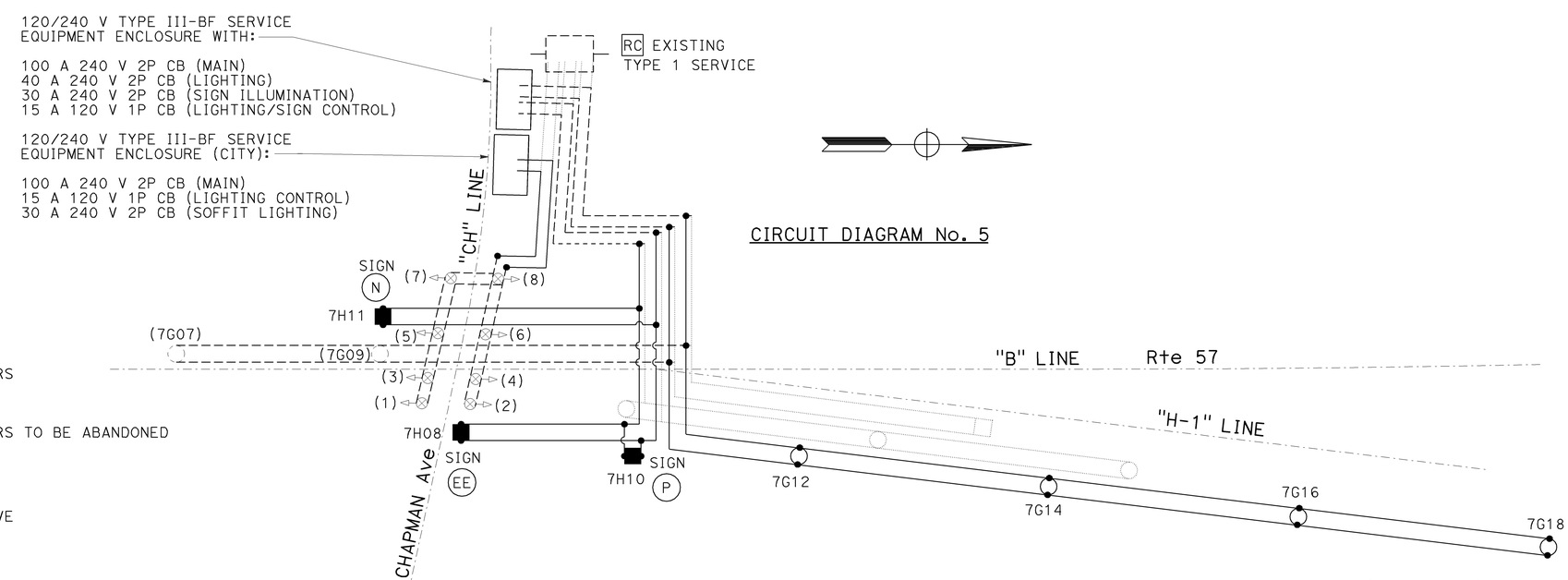

CIRCUIT DIAGRAM LEGEND:

- = EXISTING 310 W HPS TO REMAIN
- = NEW 310 W HPS
- = EXISTING 310 W HPS - REMOVE
- = EXISTING CONDUIT AND CONDUCTORS
- = NEW CONDUIT AND CONDUCTORS
- = EXISTING CONDUIT AND CONDUCTORS TO BE ABANDONED
- = EXISTING OVERHEAD SIGN
- = NEW OVERHEAD SIGN
- = EXISTING OVERHEAD SIGN - REMOVE
- = EXISTING SPLICE
- = NEW SPLICE
- 6B00 = IDENTIFICATION NUMBER (NEW)
- (6B01) = IDENTIFICATION NUMBER (EXISTING)
- (A) = OVERHEAD SIGN IDENTIFICATION

LIGHTING AND SIGN ILLUMINATION
(WIRING DIAGRAM)

NO SCALE

THIS PLAN IS ACCURATE FOR ELECTRICAL WORK ONLY.

E-31

STATE OF CALIFORNIA - DEPARTMENT OF TRANSPORTATION

CONSULTANT FUNCTIONAL SUPERVISOR: MARK J. ESPOSITO

CALCULATED-DESIGNED BY: GARY TOLMIE

CHECKED BY: ARMANDO SOLIS

REVISED BY / DATE REVISED

LAST REVISION 08-01-08 DATE PLOTTED => 21-DEC-2009 TIME PLOTTED => 10:39

H:\pdata\10105878\Admin\submittals\2009-06-29 FINAL Submittal\100% ELECTRONIC SUBMITTAL - MERGED\FDEES20BYNTR39\traffic\c0F031ua031.dgn

BORDER LAST REVISED 4/11/2008 | RELATIVE BORDER SCALE IS IN INCHES 0 1 2 3 | USERNAME => trmnguye DGN FILE => c0F031ua031.dgn | CU 12220 | EA 0F0311

Dist	COUNTY	ROUTE	POST MILES TOTAL PROJECT	SHEET No.	TOTAL SHEETS
12	Ora	57	16.2/18.6	592	960

REGISTERED CIVIL ENGINEER 7/15/09 DATE

12-14-09
PLANS APPROVAL DATE

REGISTERED PROFESSIONAL ENGINEER ARMANDO SOLIS No. 72012 Exp. 6-30-10 CIVIL STATE OF CALIFORNIA

THE STATE OF CALIFORNIA OR ITS OFFICERS OR AGENTS SHALL NOT BE RESPONSIBLE FOR THE ACCURACY OR COMPLETENESS OF SCANNED COPIES OF THIS PLAN SHEET.

RBF CONSULTING
14275 ALTON PKWY
IRVINE, CA 92618

OCTA
550 S. MAIN STREET
ORANGE, CA 92863

CIRCUIT DIAGRAM No. 6

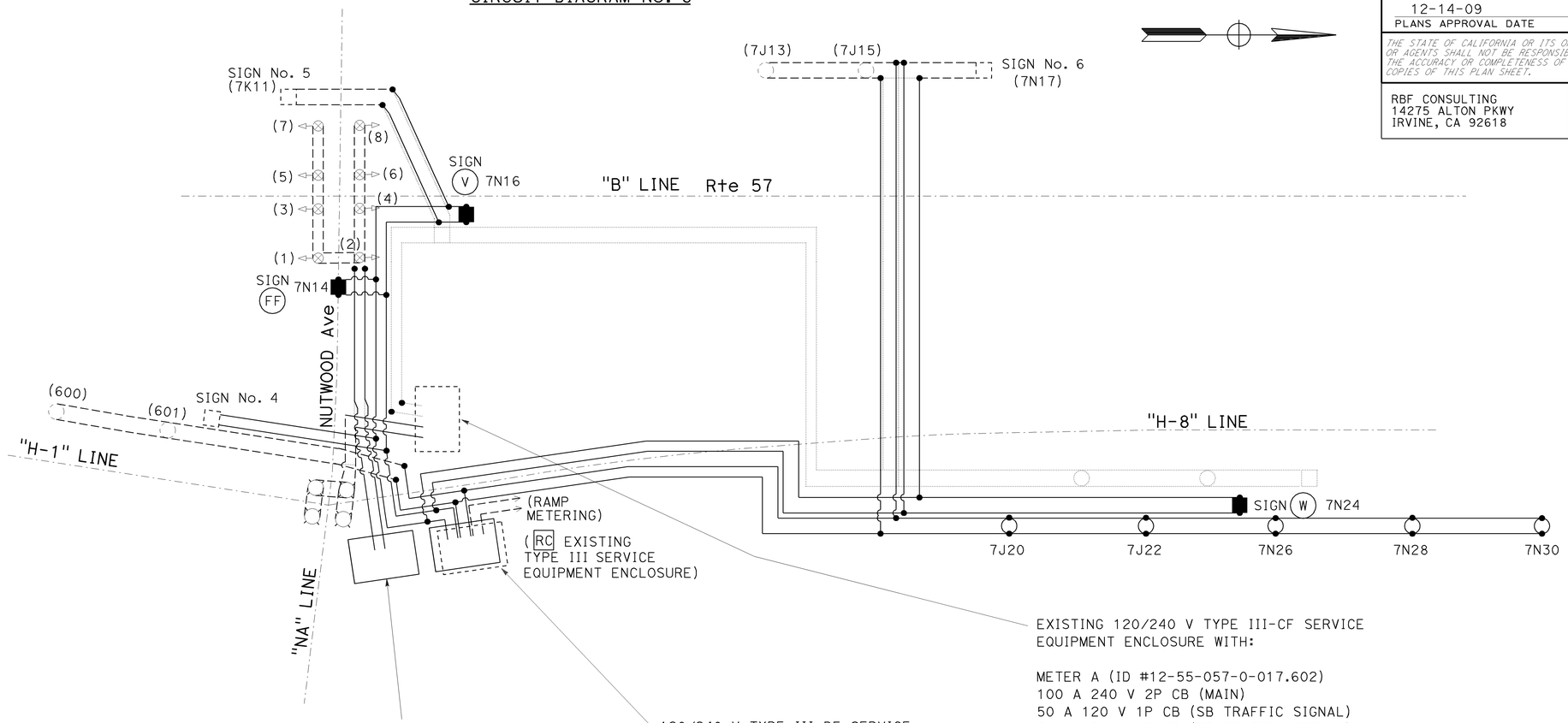

120/240 V TYPE III-BF SERVICE EQUIPMENT ENCLOSURE (CITY) WITH:

100 A 240 V 2P CB (MAIN)
30 A 240 V 2P CB (SOFFIT LIGHTING)
15 A 120 V 1P CB (LIGHTING CONTROL)

120/240 V TYPE III-BF SERVICE EQUIPMENT ENCLOSURE WITH:

100 A 240 V 2P CB (MAIN)
30 A 120 V 1P CB (RAMP METERING - NB)
30 A 120 V 1P CB (RAMP METERING - SB)
30 A 240 V 2P CB (LIGHTING)
30 A 240 V 2P CB (SIGN ILLUMINATION)
15 A 120 V 1P CB (LIGHTING/SIGN CONTROL)
20 A 120 V 1P CB (IRRIGATION)

EXISTING 120/240 V TYPE III-CF SERVICE EQUIPMENT ENCLOSURE WITH:

METER A (ID #12-55-057-0-017.602)
100 A 240 V 2P CB (MAIN)
50 A 120 V 1P CB (SB TRAFFIC SIGNAL)
20 A 120 V 1P CB (NB TRAFFIC SIGNAL)
30 A 120 V 1P (SAFETY LIGHTING)-(ADD)

METER B (ID# 12-55-057-0-017.603)
100 A 240 V 2P CB (MAIN)
30 A 240 V 2P CB (SOFFIT LTG)- RC
40 A 240 V 2P CB (LIGHTING/SIGN)- RC
30 A 120 V 1P CB (RAMP METERING, SB)
20 A 120 V 1P CB (IRRIGATION)
20 A 120 V 1P CB (CCTV)-(ADD)
15 A 120 V 1P CB (LIGHTING CONTROL)
30 A 120 V 1P CB (CCTV HIGH MAST MOTOR)-(ADD)

UNMETERED
100 A 240 V 2P CB (MAIN)

CIRCUIT DIAGRAM LEGEND:

- = EXISTING 310 W HPS TO REMAIN
- = INTERSECTION SAFETY LTG TO REMAIN
- = NEW 310 W HPS
- = EXISTING 310 W HPS - REMOVE
- = EXISTING CONDUIT AND CONDUCTORS
- = NEW CONDUIT AND CONDUCTORS
- = EXISTING CONDUIT AND CONDUCTORS TO BE ABANDONED
- = EXISTING OVERHEAD SIGN
- = NEW OVERHEAD SIGN
- = EXISTING OVERHEAD SIGN - REMOVE
- = EXISTING SPLICE
- = NEW SPLICE
- 6B00 = IDENTIFICATION NUMBER (NEW)
- (6B01)= IDENTIFICATION NUMBER (EXISTING)
- (A) = OVERHEAD SIGN IDENTIFICATION

LIGHTING AND SIGN ILLUMINATION
(WIRING DIAGRAM)

NO SCALE

E-32

THIS PLAN IS ACCURATE FOR ELECTRICAL WORK ONLY.

STATE OF CALIFORNIA - DEPARTMENT OF TRANSPORTATION
Caltrans
CONSULTANT FUNCTIONAL SUPERVISOR: MARK J. ESPOSITO
CALCULATED-DESIGNED BY: GARY TOLMIE
CHECKED BY: ARMANDO SOLIS
REVISED BY / DATE REVISED

H:\pdata\10105878\Admin\submittals\2009-06-29 FINAL Submittal\100% ELECTRONIC SUBMITTAL - MERGED\FDEES2009BYNTR39\traffic\c0F031ua032.dgn

LAST REVISION 08-01-08 | DATE PLOTTED => 21-DEC-2009 | TIME PLOTTED => 10:39

Dist	COUNTY	ROUTE	POST MILES TOTAL PROJECT	SHEET No.	TOTAL SHEETS
12	Ora	57	16.2/18.6	593	960

REGISTERED CIVIL ENGINEER — DATE 7/15/09

12-14-09
PLANS APPROVAL DATE

REGISTERED PROFESSIONAL ENGINEER — ARMANDO SOLIS No. 72012 Exp. 6-30-10 CIVIL — STATE OF CALIFORNIA

THE STATE OF CALIFORNIA OR ITS OFFICERS OR AGENTS SHALL NOT BE RESPONSIBLE FOR THE ACCURACY OR COMPLETENESS OF SCANNED COPIES OF THIS PLAN SHEET.

RBF CONSULTING
14275 ALTON PKWY
IRVINE, CA 92618

OCTA
550 S. MAIN STREET
ORANGE, CA 92863

EXISTING 120/240 V TYPE III-CF SERVICE WITH TWO TYPE V PEC:

METER A (ID# 12-55-057-0-018.350)
100 A 240 V 2P CB (MAIN)
50 A 120 V 1P CB (TRAFFIC SIGNAL)
20 A 120 V 1P CB (IISNS)
20 A 120 V 1P CB (SAFETY LIGHTS)(RELOCATED)

METER B (ID #12-55-057-0-018.351)
100 A 240 V 2P CB (MAIN)
40 A 240 V 2P CB (LIGHTING)(SPARE)*
30 A 240 V 2P CB (SIGN ILLUMINATION)(SPARE)*
30 A 120 V 1P CB (RAMP METERING)(WB TO SB)
30 A 120 V 1P CB (RAMP METERING)(EB TO SB)
20 A 120 V 1P CB (FLASHING BEACON)(SPARE)
20 A 120 V 1P CB (COUNT STATION)

UNMETERED
100 A 240 V 2P CB (MAIN)
20 A 120 V 1P CB (SAFETY LIGHTS)(RELOCATE TO METER A)
15 A 120 V 1P CB (LIGHTING CONTROL)
INSTALL 30 A 2P SIGN ILLUMINATION CONTACTOR
(*) CONNECT LIGHTING/SIGN CIRCUIT TO SPARE CIRCUIT BREAKERS

EXISTING 120/240 V
TYPE III-CF SERVICE EQUIPMENT ENCLOSURE WITH:

METER A (ID #12-55-057-0-018.501)
200 A 240 V 2P CB (MAIN)
70 A 120 V 1P CB (CMS)
70 A 120 V 1P CB (CMS)
70 A 120 V 1P CB (CMS)
70 A 120 V 1P CB (CMS)
30 A 120 V 1P CB (334 CMS CABINET)
15 A 120 V 1P CB (LIGHTING CONTROL)(RELOCATED)

METER B (ID #12-55-057-0-018.499)
100 A 240 V 2P CB (MAIN)
50 A 240 V 2P CB (LIGHTING)
15 A 120 V 1P CB (LIGHTING CONTROL)(RELOCATE TO METER A)
30 A 240 V 2P CB (SIGN ILLUMINATION)(ADD)
15 A 120 V 1P CB (SIGN ILLUMINATION CONTROL)(ADD)

INSTALL 30 A 2P (SIGN ILLUMINTION CONTACTOR)

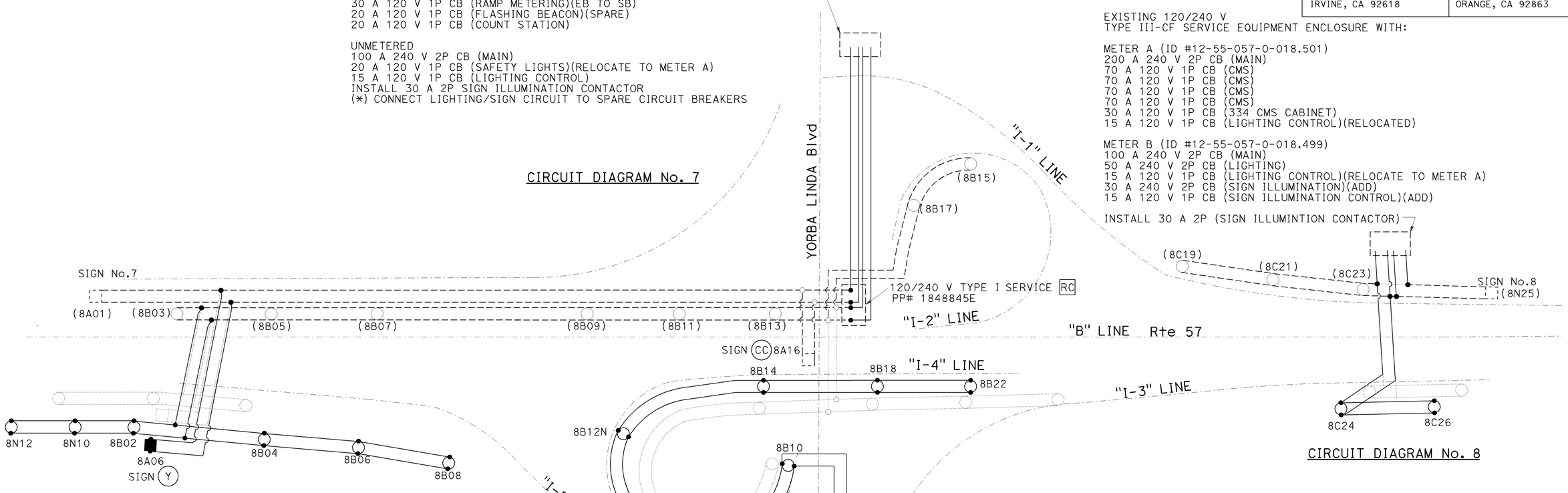

EXISTING 120/240 V TYPE III-CF
SERVICE EQUIPMENT ENCLOSURE WITH:

METER A (ID #12-55-057-0-018.330)
100 A 240 V 2P CB (MAIN)
50 A 120 V 1P CB (TRAFFIC SIGNAL)
20 A 120 V 1P CB (IISNS)
20 A 120 V 1P CB (SAFETY LIGHTS)(RELOCATED)

METER B (ID #12-55-057-0-018.345)
100 A 240 V 2P CB (MAIN)
30 A 120 V 1P CB (RAMP METERING)
40 A 240 V 2P CB (LIGHTING)(SPARE)*
30 A 240 V 2P CB (RAMP METERING)(1P SPARE)
20 A 120 V 1P CB (IRRIGATION)
30 A 120 V 1P CB (RAMP METERING)
20 A 120 V 1P CB (CCTV)

UNMETERED
100 A 240 V 2P CB (MAIN)
20 A 120 V 1P CB (SAFETY LIGHTING)(RELOCATE TO METER A)
15 A 120 V 1P CB (LIGHTING CONTROL)
(*) CONNECT LIGHTING CIRCUIT TO SPARE CIRCUIT BREAKER

CIRCUIT DIAGRAM LEGEND:

- = EXISTING 310 W HPS TO REMAIN
- = NEW 310 W HPS
- = EXISTING 310 W HPS - REMOVE
- = EXISTING CONDUIT AND CONDUCTORS
- = NEW CONDUIT AND CONDUCTORS
- = EXISTING CONDUIT AND CONDUCTORS TO BE ABANDONED
- = EXISTING OVERHEAD SIGN
- = NEW OVERHEAD SIGN
- = EXISTING OVERHEAD SIGN - REMOVE
- = EXISTING SPLICE
- = NEW SPLICE
- 6B00 = IDENTIFICATION NUMBER (NEW)
- (6B01) = IDENTIFICATION NUMBER (EXISTING)
- (A) = OVERHEAD SIGN IDENTIFICATION

LIGHTING AND SIGN ILLUMINATION
(WIRING DIAGRAM)

NO SCALE

THIS PLAN IS ACCURATE FOR ELECTRICAL WORK ONLY.

E-33

STATE OF CALIFORNIA - DEPARTMENT OF TRANSPORTATION

CONSULTANT FUNCTIONAL SUPERVISOR: MARK J. ESPOSITO

CALCULATED-DESIGNED BY: GARY TOLMIE

CHECKED BY: ARMANDO SOLIS

REVISED BY / DATE REVISED

LAST REVISION 08-01-08

DATE PLOTTED => 21-DEC-2009
TIME PLOTTED => 12:55

H:\pdata\10105878\Admin\submittals\2009-06-29 FINAL Submittal\100% ELECTRONIC SUBMITTAL - MERGED1-FDEES2009BY\Traffic\c0F031ua033.dgn

BORDER LAST REVISED 4/11/2008

RELATIVE BORDER SCALE IS IN INCHES 0 1 2 3

USERNAME => trlenard
DGN FILE => c0F031ua033.dgn

CU 12220

EA 0F0311

Dist	COUNTY	ROUTE	POST MILES TOTAL PROJECT	SHEET No.	TOTAL SHEETS
12	Ora	57	16.2/18.6	594	960

Mark J. Esposito 7/15/09
REGISTERED CIVIL ENGINEER DATE

12-14-09
PLANS APPROVAL DATE

REGISTERED PROFESSIONAL ENGINEER MARK J. ESPOSITO No. 69921 Exp. 9-30-10 CIVIL STATE OF CALIFORNIA

THE STATE OF CALIFORNIA OR ITS OFFICERS OR AGENTS SHALL NOT BE RESPONSIBLE FOR THE ACCURACY OR COMPLETENESS OF SCANNED COPIES OF THIS PLAN SHEET.

RBF CONSULTING
14275 ALTON PKWY
IRVINE, CA 92618

OCTA
550 S. MAIN STREET
ORANGE, CA 92863

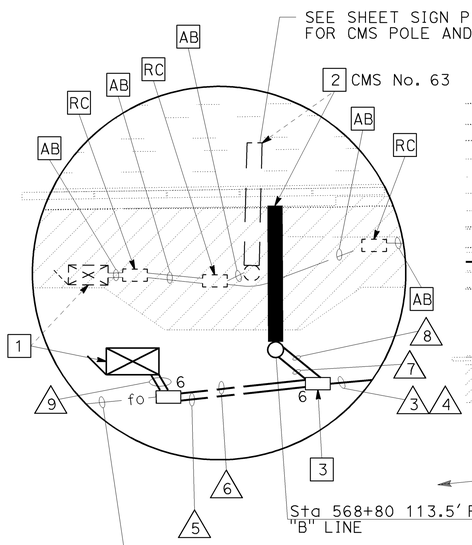

DETAIL A
NO SCALE

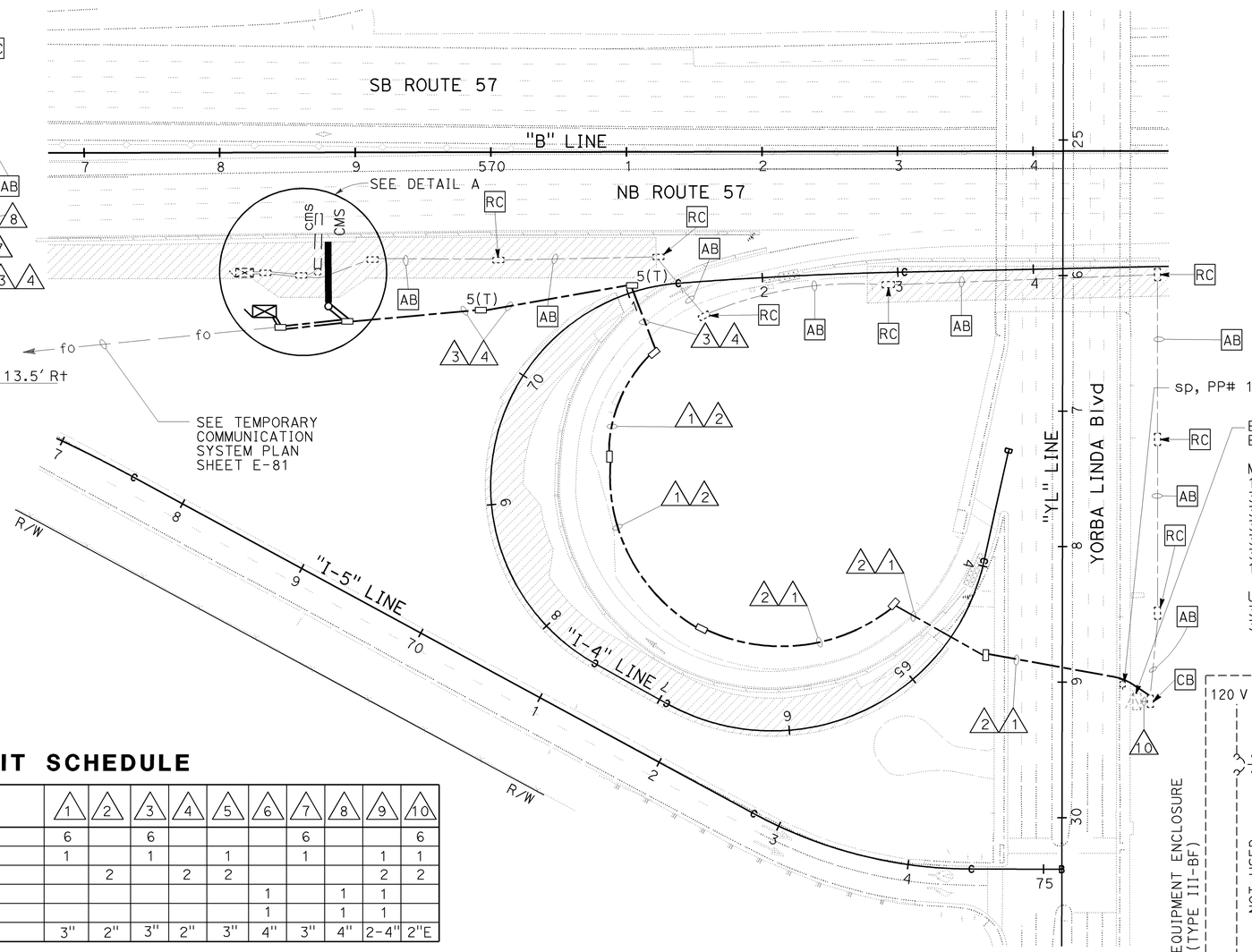

sp, PP# 1848843E

Exist 120/240 V TYPE III-BF SERVICE EQUIPMENT ENCLOSURE (ID No. 12-055-0220-012.352) WITH:

METERED:
100 A 240 V 3P CB (MAIN)
30 A 120 V 1P CB (CMS)
30 A 120 V 1P CB (CMS)
30 A 120 V 1P CB (CMS)
30 A 120 V 1P CB (CMS)
30 A 120 V 1P CB (CMS 334 CABINET)
15 A 120 V 1P CB (LIGHTING CONTROL)

UNMETERED:
30 A 240 V 2P CB (SPARE)
30 A 240 V 2P CB (SPARE)

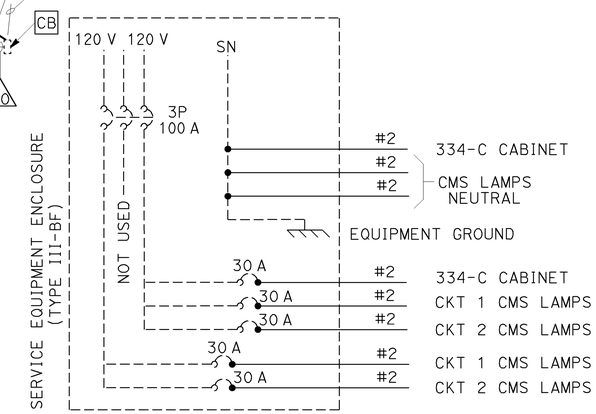

EXISTING CIRCUIT BREAKER DETAIL

CONDUCTOR AND CONDUIT SCHEDULE

AWG OR CABLE	CONDUCTOR RUN	1	2	3	4	5	6	7	8	9	10
#2	CMS LAMPS	6		6				6			6
	CMS GROUND	1		1		1		1		1	1
	SERVICE (334-C CABINET)		2		2	2				2	2
10#18	CURRENT SENSE CABLE**						1		1	1	
40#18	CMS SIGNAL CABLE**						1		1	1	
CONDUIT SIZE		3"	2"	3"	2"	3"	4"	3"	4"	2-4"	2"E

ALL CONDUITS AND CONDUCTORS ARE NEW UNLESS NOTED OTHERWISE.
** STATE FURNISHED
E=EXISTING.

NOTES (THIS SHEET):

1. RELOCATE TYPE 334-C CABINET.
2. RELOCATE MODEL 500 CHANGEABLE MESSAGE SIGN PANEL ONTO OVERHEAD SIGN TRUSS.
3. INSTALL GROUND ROD INSIDE #6 PULL BOX.
4. FOR ACCURATE RIGHT OF WAY DATA, CONTACT RIGHT OF WAY ENGINEERING AT THE DISTRICT OFFICE.

THIS PLAN IS ACCURATE FOR ELECTRICAL WORK ONLY.

RELOCATE CHANGEABLE MESSAGE SIGN SYSTEM (LOCATION 1)

STAGE 1A

SCALE: 1" = 50'

E-34

REVISED BY | DATE REVISED
ROSALVA NAVARRO | ARMANDO SOLIS
CALCULATED-DESIGNED BY | CHECKED BY
CONSULTANT FUNCTIONAL SUPERVISOR
CARLOS ORTIZ

STATE OF CALIFORNIA - DEPARTMENT OF TRANSPORTATION
Caltrans

LAST REVISION 08-01-08 | DATE PLOTTED => 21-DEC-2009 | TIME PLOTTED => 12:55

Dist	COUNTY	ROUTE	POST MILES TOTAL PROJECT	SHEET No.	TOTAL SHEETS
12	Ora	57	16.2/18.6	595	960

Mark J. Esposito 7/15/09
REGISTERED CIVIL ENGINEER DATE

12-14-09
PLANS APPROVAL DATE

REGISTERED PROFESSIONAL ENGINEER MARK J. ESPOSITO No. 69921 Exp. 9-30-10 CIVIL STATE OF CALIFORNIA

THE STATE OF CALIFORNIA OR ITS OFFICERS OR AGENTS SHALL NOT BE RESPONSIBLE FOR THE ACCURACY OR COMPLETENESS OF SCANNED COPIES OF THIS PLAN SHEET.

RBF CONSULTING
14275 ALTON PKWY
IRVINE, CA 92618

OCTA
550 S. MAIN STREET
ORANGE, CA 92863

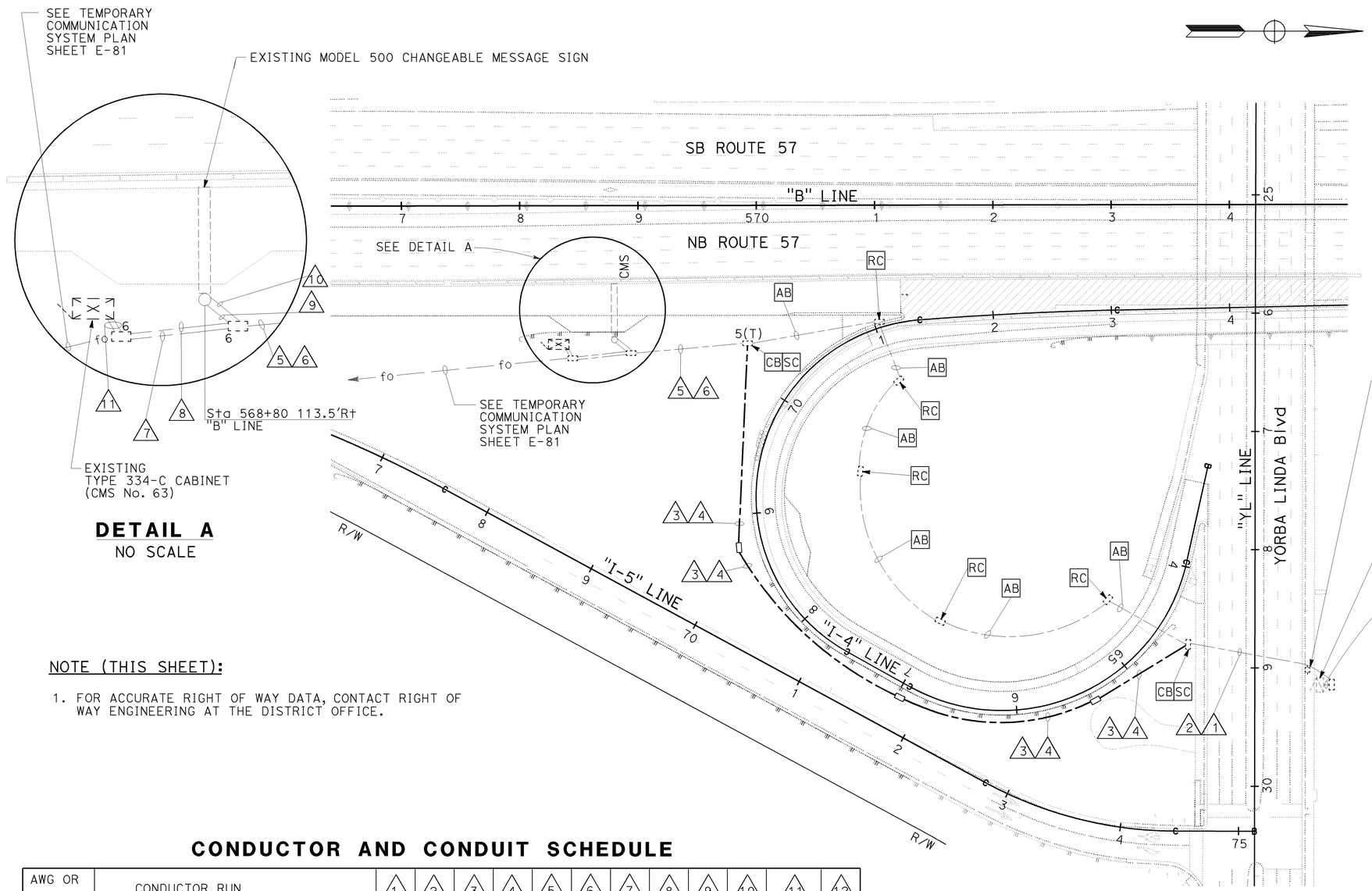

DETAIL A
NO SCALE

sp, PP# 1848843E

Exist 120/240 V TYPE III-BF SERVICE EQUIPMENT ENCLOSURE (ID No. 12-055-0220-012.352) WITH:

METERED:
100 A 240 V 3P CB (MAIN)
30 A 120 V 1P CB (CMS)
30 A 120 V 1P CB (CMS)
30 A 120 V 1P CB (CMS)
30 A 120 V 1P CB (CMS)
30 A 120 V 1P CB (CMS 334 CABINET)
15 A 120 V 1P CB (LIGHTING CONTROL)

UNMETERED:
30 A 240 V 2P CB (SPARE)
30 A 240 V 2P CB (SPARE)

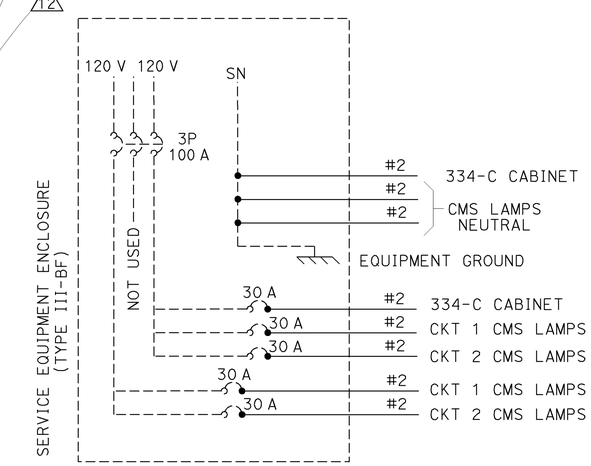

EXISTING CIRCUIT BREAKER DETAIL

NOTE (THIS SHEET):

1. FOR ACCURATE RIGHT OF WAY DATA, CONTACT RIGHT OF WAY ENGINEERING AT THE DISTRICT OFFICE.

CONDUCTOR AND CONDUIT SCHEDULE

AWG OR CABLE	CONDUCTOR RUN	1	2	3	4	5	6	7	8	9	10	11	12
#2	CMS LAMPS	6		6		6E				6E			6
	CMS GROUND			1		1E		1		1E		1E	1
	SERVICE (334-C CABINET)		2		2		2E	2				2E	2
10#18	CURRENT SENSE CABLE								1E		1E	1E	
40#18	CMS SIGNAL CABLE								1E		1E	1E	
CONDUIT SIZE		3"E	2"E	3"	2"	3"E	2"E	3"E	4"E	3"E	4"E	2-4"E	2"E

ALL CONDUITS AND CONDUCTORS ARE NEW UNLESS NOTED OTHERWISE.
E=EXISTING TO REMAIN.

THIS PLAN IS ACCURATE FOR ELECTRICAL WORK ONLY.

RELOCATE CHANGEABLE MESSAGE SIGN SYSTEM (LOCATION 1)
STAGE 1C

SCALE: 1" = 50'

E-35

STATE OF CALIFORNIA - DEPARTMENT OF TRANSPORTATION
Caltrans

CONSULTANT FUNCTIONAL SUPERVISOR: CARLOS ORTIZ
CALCULATED-DESIGNED BY: ARMANDO SOLIS
CHECKED BY: ROSALVA NAVARRO
REVISED BY
DATE REVISED

LAST REVISION 08-01-08
DATE PLOTTED => 21-DEC-2009
TIME PLOTTED => 12:55

Dist	COUNTY	ROUTE	POST MILES TOTAL PROJECT	SHEET No.	TOTAL SHEETS
12	Ora	57	16.2/18.6	596	960

Mark J. Esposito 7/15/09
REGISTERED CIVIL ENGINEER DATE

12-14-09
PLANS APPROVAL DATE

REGISTERED PROFESSIONAL ENGINEER MARK J. ESPOSITO No. 69921 Exp. 9-30-10 CIVIL STATE OF CALIFORNIA

THE STATE OF CALIFORNIA OR ITS OFFICERS OR AGENTS SHALL NOT BE RESPONSIBLE FOR THE ACCURACY OR COMPLETENESS OF SCANNED COPIES OF THIS PLAN SHEET.

RBF CONSULTING
14275 ALTON PKWY
IRVINE, CA 92618

OCTA
550 S. MAIN STREET
ORANGE, CA 92863

NOTE:

1. FOR ACCURATE RIGHT OF WAY DATA, CONTACT RIGHT OF WAY ENGINEERING AT THE DISTRICT OFFICE.

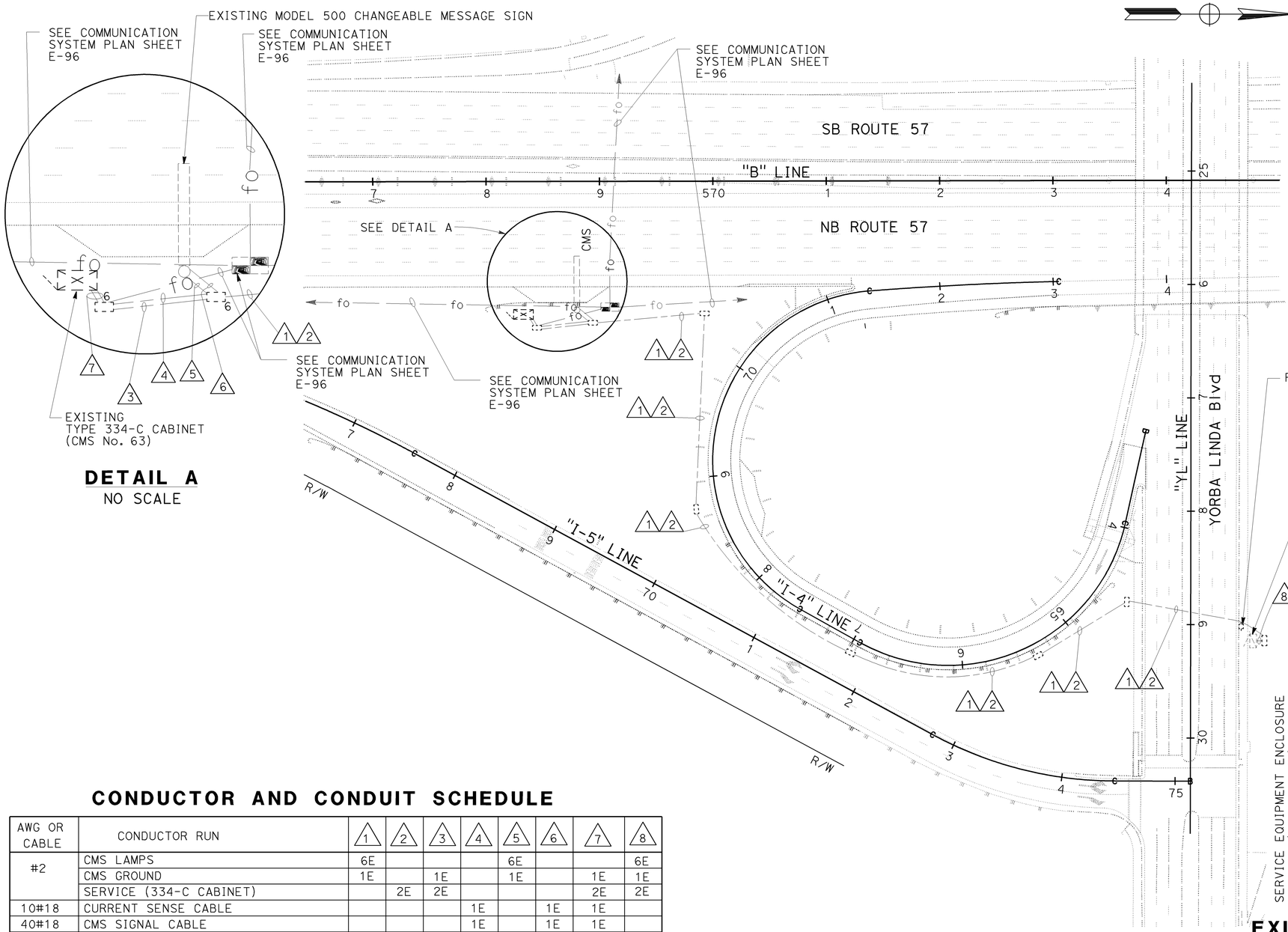

DETAIL A
NO SCALE

PP# 1848843E

Exist 120/240 V TYPE III-BF SERVICE EQUIPMENT ENCLOSURE (ID No. 12-055-0220-012.352) WITH:

METERED:
100 A 240 V 3P CB (MAIN)
30 A 120 V 1P CB (CMS)
30 A 120 V 1P CB (CMS)
30 A 120 V 1P CB (CMS)
30 A 120 V 1P CB (CMS)
30 A 120 V 1P CB (CMS 334 CABINET)
15 A 120 V 1P CB (LIGHTING CONTROL)

UNMETERED:
30 A 240 V 2P CB (SPARE)
30 A 240 V 2P CB (SPARE)

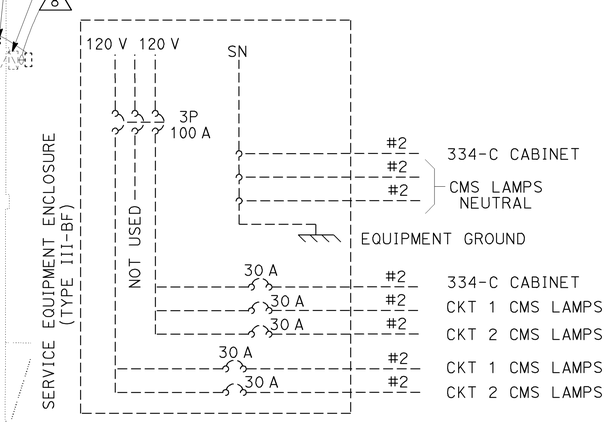

EXISTING CIRCUIT BREAKER DETAIL

CONDUCTOR AND CONDUIT SCHEDULE

AWG OR CABLE	CONDUCTOR RUN	1	2	3	4	5	6	7	8
#2	CMS LAMPS	6E				6E			6E
	CMS GROUND	1E		1E		1E		1E	1E
	SERVICE (334-C CABINET)		2E	2E				2E	2E
10#18	CURRENT SENSE CABLE				1E		1E	1E	
40#18	CMS SIGNAL CABLE				1E		1E	1E	
12 SINGLEMODE (ULTIMATE) FIBER OPTIC CABLE								1E	
CONDUIT SIZE		3"E	2"E	3"E	4"E	3"E	4"E	2-4"E	2"E

E=EXISTING TO REMAIN.

FOR REFERENCE ONLY

THIS PLAN IS ACCURATE FOR ELECTRICAL WORK ONLY.

RELOCATE CHANGEABLE MESSAGE SIGN SYSTEM (LOCATION 1)

SCALE: 1" = 50'

E-36

STATE OF CALIFORNIA - DEPARTMENT OF TRANSPORTATION
Caltrans
CONSULTANT FUNCTIONAL SUPERVISOR: CARLOS ORTIZ
CALCULATED-DESIGNED BY: ROSALVA NAVARRO
CHECKED BY: ARMANDO SOLIS
REVISED BY / DATE REVISED

LAST REVISION 08-01-08 | DATE PLOTTED => 21-DEC-2009 | TIME PLOTTED => 12:55

Dist	COUNTY	ROUTE	POST MILES TOTAL PROJECT	SHEET No.	TOTAL SHEETS
12	Ora	57	16.2/18.6	597	960

REGISTERED CIVIL ENGINEER — DATE 7/15/09

12-14-09
PLANS APPROVAL DATE

REGISTERED PROFESSIONAL ENGINEER — MARK J. ESPOSITO — No. 69921 — Exp. 9-30-10 — CIVIL — STATE OF CALIFORNIA

THE STATE OF CALIFORNIA OR ITS OFFICERS OR AGENTS SHALL NOT BE RESPONSIBLE FOR THE ACCURACY OR COMPLETENESS OF SCANNED COPIES OF THIS PLAN SHEET.

RBF CONSULTING
14275 ALTON PKWY
IRVINE, CA 92618

OCTA
550 S. MAIN STREET
ORANGE, CA 92863

NOTES (THIS SHEET):

1. RELOCATE MODEL 334 CCTV CABINET WITH FIBER DISTRIBUTION UNIT AND FIBER OPITC DATA MODEM AND INSTALL ACTIVE VIDEO SPLITTER.
2. INSTALL CCTV CAMERA ASSEMBLY ON TYPE 60 HIGH MAST POLE. SEE DETAIL A FOR ORIENTATION OF CCTV MAST ARM. SEE SHEET E-46 FOR MOUNTING DETAILS.
3. RS CCTV CAMERA ASSEMBLY AND TYPE 5 POLE.
4. INSTALL 30 A 120 V 1P CB ON METER A FOR HIGH MAST CCTV POLE LOWERING SYSTEM.
5. RC EXISTING 2#8 CCTV SERVICE CONDUCTORS.
6. CCTV SYSTEM SHALL BE IN OPERATION AT ALL TIMES.
7. UNLESS OTHERWISE NOTED, PULL BOXES, FOUNDATIONS, AND CONDUITS SHALL BE PLACED AT ULTIMATE GRADE AND LOCATIONS.
8. FOR COMPLETE RIGHT OF WAY AND ACCURATE ACCESS DATA, SEE RIGHT OF WAY RECORD MAPS AT DISTRICT OFFICE.

CONDUCTOR AND CONDUIT SCHEDULE

AWG OR CABLE	CONDUCTOR RUN	1	2	3	4	5
#8	GROUND		1	1		
#8	CCTV CONTROLLER CABINET	2		2		2
#8	RMS SERVICE				2E	2E
#6	HIGH MAST POLE MOTOR	2	2			2
#10	IRRIGATION SERVICE					2E
CCTV MULTI-CONDUCTOR CABLE			1	1		
CONDUIT SIZE		2"	3"	2-3"	2"E	2"E

ALL CONDUITS, CONDUCTORS, AND CABLES ARE NEW EXCEPT AS NOTED
E=EXISTING TO REMAIN

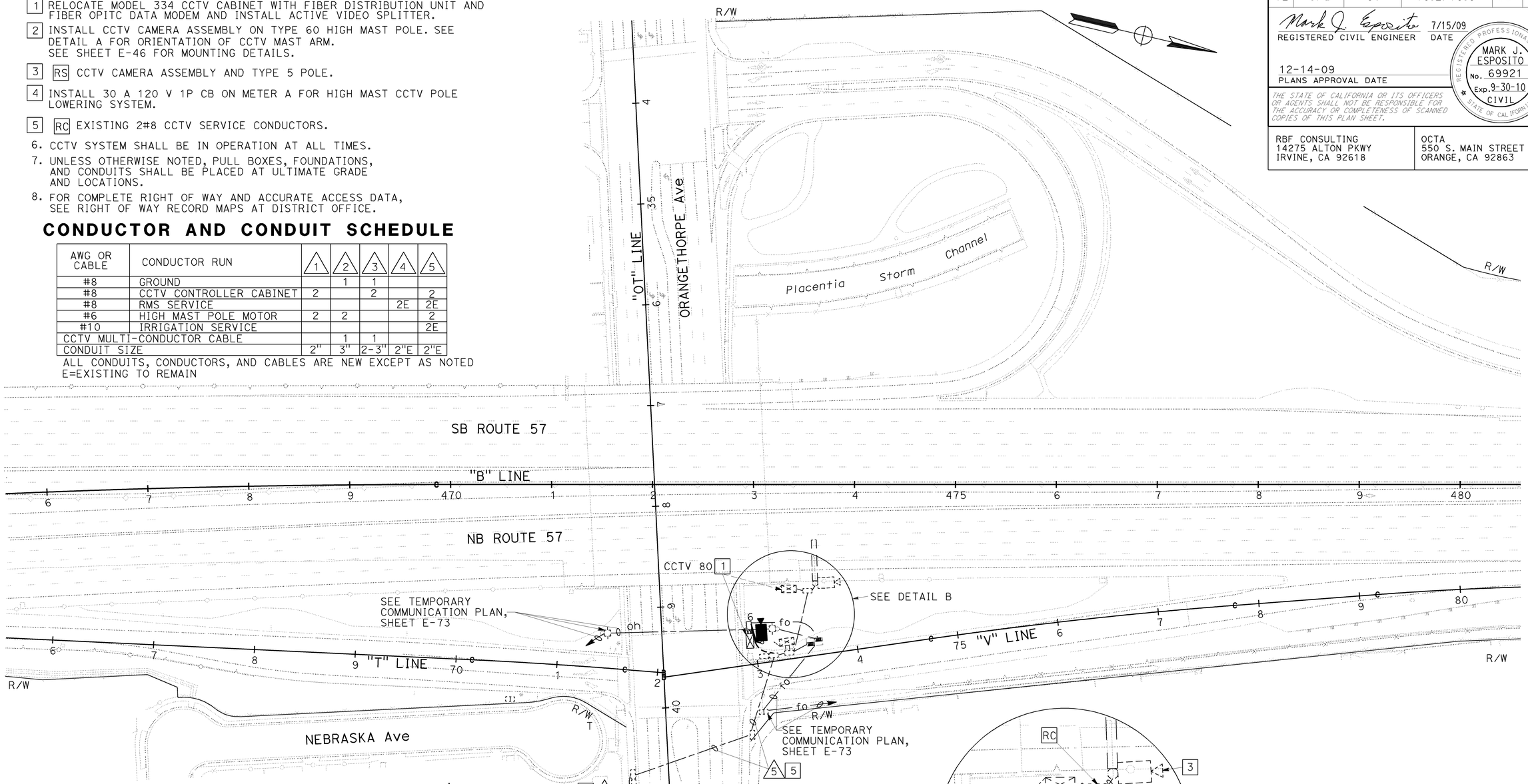

Exist 120/240 V TYPE III-CF
SERVICE EQUIPMENT ENCLOSURE WITH:
METER A ID#12-55-057-0-016.392
30 A 120 V 1P CB (TS)
30 A 120 V 1P CB (CCTV 80)
30 A 120 V 1P CB (HIGH MAST CCTV POLE) (ADD)
METER B ID#12-55-057-0-016.393
100 A 240 V 2P CB (MAIN)
30 A 120 V 1P CB (RMS)
20 A 120 V 1P CB (IRRIGATION)
UNMETERED:
15 A 120 V 1P CB (LIGHTING CONTROL)
30 A 120 V 1P CB (SAFETY LIGHTING)

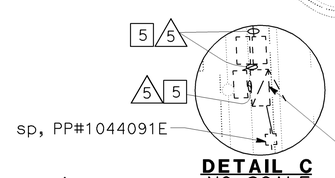

DETAIL C
NO SCALE

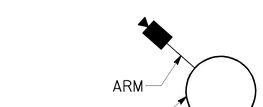

DETAIL A
ORIENTATION OF CCTV MAST ARM
NO SCALE

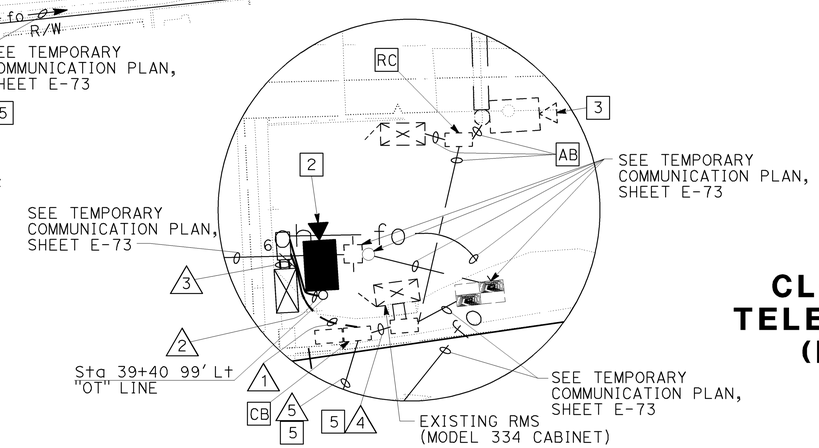

DETAIL B
NO SCALE

CLOSED CIRCUIT TELEVISION SYSTEM (LOCATION 1)

STAGE 1A

SCALE: 1" = 50'

E-37

THIS PLAN IS ACCURATE FOR ELECTRICAL WORK ONLY.

STATE OF CALIFORNIA - DEPARTMENT OF TRANSPORTATION
CONSULTANT FUNCTIONAL SUPERVISOR: CARLOS A. ORTIZ
CALCULATED-DESIGNED BY: JESSICA PARRENO
CHECKED BY: ARMANDO SOLIS
REVISED BY / DATE REVISED

LAST REVISION 08-01-08 — DATE PLOTTED => 21-DEC-2009 — TIME PLOTTED => 12:55

H:\pdata\10105878\Admin\submittals\2009-06-29 FINAL Submittal\100% ELECTRONIC SUBMITTAL - MERGED01-FDEES2009\traffic\c0F031ua037.dgn

BORDER LAST REVISED 4/11/2008 — RELATIVE BORDER SCALE IS IN INCHES 0 1 2 3 — USERNAME => trienard — DGN FILE => c0F031ua037.dgn — CU 12220 — EA 0F0311

Dist	COUNTY	ROUTE	POST MILES TOTAL PROJECT	SHEET No.	TOTAL SHEETS
12	Ora	57	16.2/18.6	598	960

Mark J. Esposito 7/15/09
REGISTERED CIVIL ENGINEER DATE

12-14-09
PLANS APPROVAL DATE

REGISTERED PROFESSIONAL ENGINEER MARK J. ESPOSITO No. 69921 Exp. 9-30-10 CIVIL STATE OF CALIFORNIA

THE STATE OF CALIFORNIA OR ITS OFFICERS OR AGENTS SHALL NOT BE RESPONSIBLE FOR THE ACCURACY OR COMPLETENESS OF SCANNED COPIES OF THIS PLAN SHEET.

RBF CONSULTING
14275 ALTON PKWY
IRVINE, CA 92618

OCTA
550 S. MAIN STREET
ORANGE, CA 92863

NOTE:

FOR COMPLETE RIGHT OF WAY AND ACCURATE ACCESS DATA, SEE RIGHT OF WAY RECORD MAPS AT DISTRICT OFFICE.

CONDUCTOR AND CONDUIT SCHEDULE

AWG OR CABLE	CONDUCTOR RUN	1	2	3	4	5
#8	GROUND		1E	1E		
#8	CCTV CONTROLLER CABINET	2E		2E		2E
#8	RMS SERVICE				2E	2E
#6	HIGH MAST POLE MOTOR	2E	2E			2E
#10	IRRIGATION SERVICE					2E
CCTV MULTI-CONDUCTOR CABLE			1E	1E		
CONDUIT SIZE		2"E	3"E	2-3"E	2"E	2"E

E=EXISTING TO REMAIN

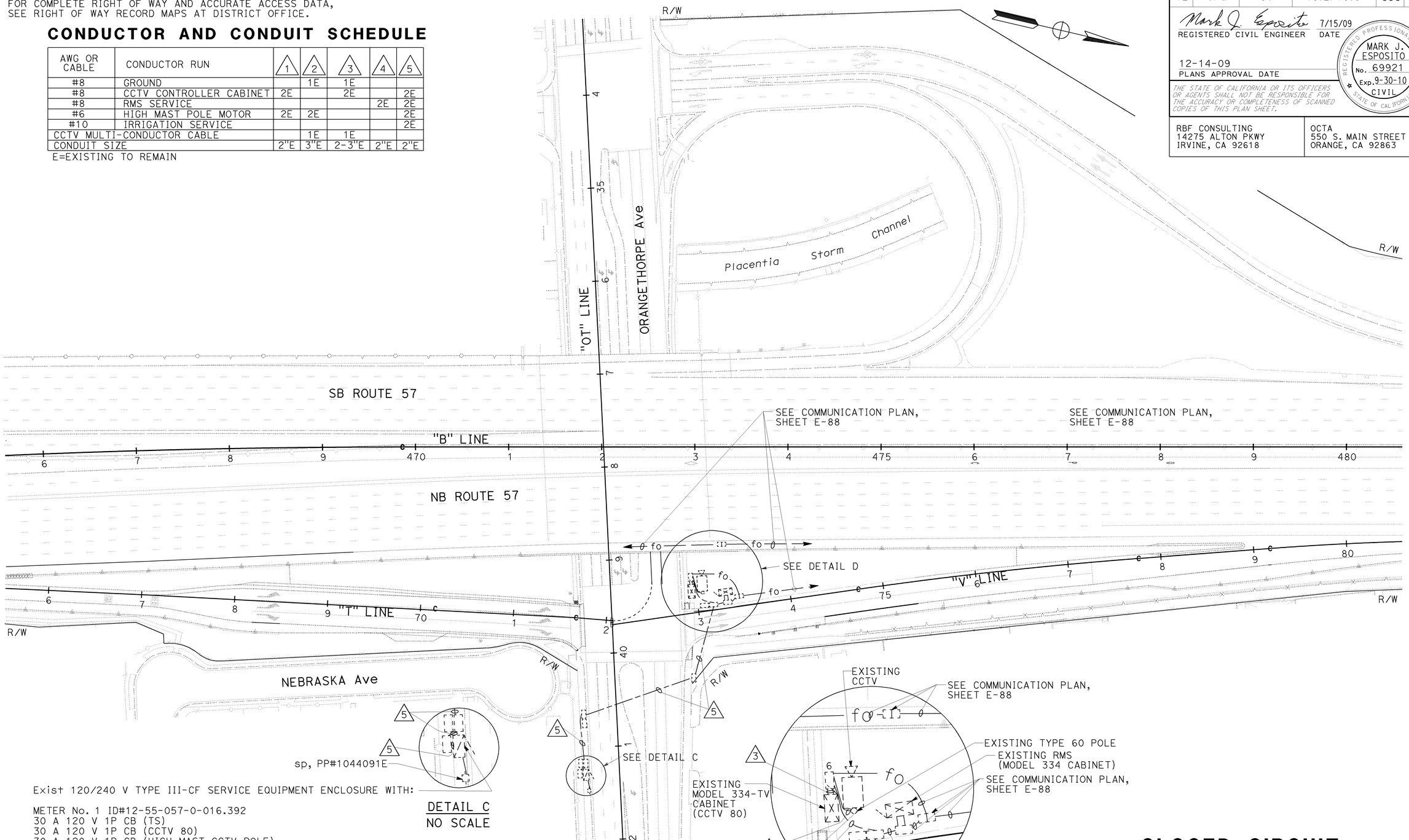

Exist 120/240 V TYPE III-CF SERVICE EQUIPMENT ENCLOSURE WITH:

METER No. 1 ID#12-55-057-0-016.392
30 A 120 V 1P CB (TS)
30 A 120 V 1P CB (CCTV 80)
30 A 120 V 1P CB (HIGH MAST CCTV POLE)

METER No. 2 ID#12-55-057-0-016.393
100 A 240 V 2P CB (MAIN BREAKER)
40 A 120 V 1P CB (RMS)
20 A 120 V 1P CB (IRRIGATION)

UNMETERED:
15 A 120 V 1P CB (LIGHTING CONTROL)
30 A 240 V 2P CB (SAFETY LIGHTING)

DETAIL C
NO SCALE

DETAIL B
NO SCALE

FOR REFERENCE ONLY

THIS PLAN IS ACCURATE FOR ELECTRICAL WORK ONLY.

CLOSED CIRCUIT TELEVISION SYSTEM (LOCATION 1)

SCALE: 1" = 50'

E-38

STATE OF CALIFORNIA - DEPARTMENT OF TRANSPORTATION
Caltrans
CONSULTANT FUNCTIONAL SUPERVISOR: CARLOS A. ORTIZ
CALCULATED-DESIGNED BY: JESSICA PARRENO
CHECKED BY: ARMANDO SOLIS
REVISED BY / DATE REVISED

H:\pdata\10105878\Admin\submittals\2009-06-29 FINAL Submittal\100% ELECTRONIC SUBMITTAL - MERGED01-FDEES2009\Traffic\c0F031ua038.dgn

LAST REVISION 08-01-08 | DATE PLOTTED => 21-DEC-2009 | TIME PLOTTED => 12:55

BORDER LAST REVISED 4/11/2008 | RELATIVE BORDER SCALE IS IN INCHES 0 1 2 3 | USERNAME => trienard | DGN FILE => c0F031ua038.dgn | CU 12220 | EA 0F0311

Dist	COUNTY	ROUTE	POST MILES TOTAL PROJECT	SHEET No.	TOTAL SHEETS
12	Ora	57	16.2/18.6	599	960

Mark J. Esposito 7/15/09
REGISTERED CIVIL ENGINEER DATE

12-14-09
PLANS APPROVAL DATE

REGISTERED PROFESSIONAL ENGINEER MARK J. ESPOSITO No. 69921 Exp. 9-30-10 CIVIL STATE OF CALIFORNIA

THE STATE OF CALIFORNIA OR ITS OFFICERS OR AGENTS SHALL NOT BE RESPONSIBLE FOR THE ACCURACY OR COMPLETENESS OF SCANNED COPIES OF THIS PLAN SHEET.

RBF CONSULTING
14275 ALTON PKWY
IRVINE, CA 92618

OCTA
550 S. MAIN STREET
ORANGE, CA 92863

CONDUCTOR AND CONDUIT SCHEDULE

AWG OR CABLE	CONDUCTOR RUN	1	2	3	4
#8	GROUND		1	1	
#8	CCTV CONTROLLER CABINET	2		2	2
#6	HIGH MAST POLE MOTOR	2	2		2
CCTV MULTI-CONDUCTOR CABLE			1	1	
CONDUIT SIZE		2"	3"	2-3"	2"E

ALL CONDUITS, CONDUCTORS, AND CABLES ARE NEW EXCEPT AS NOTED.
E=EXISTING TO REMAIN.

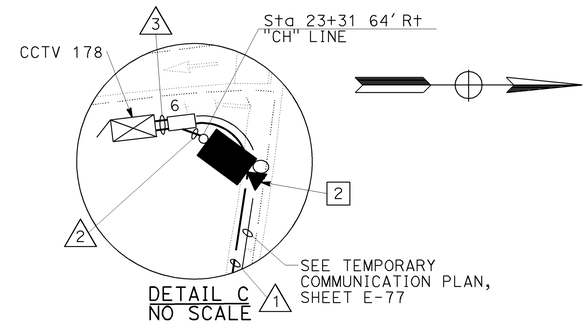

DETAIL C
NO SCALE

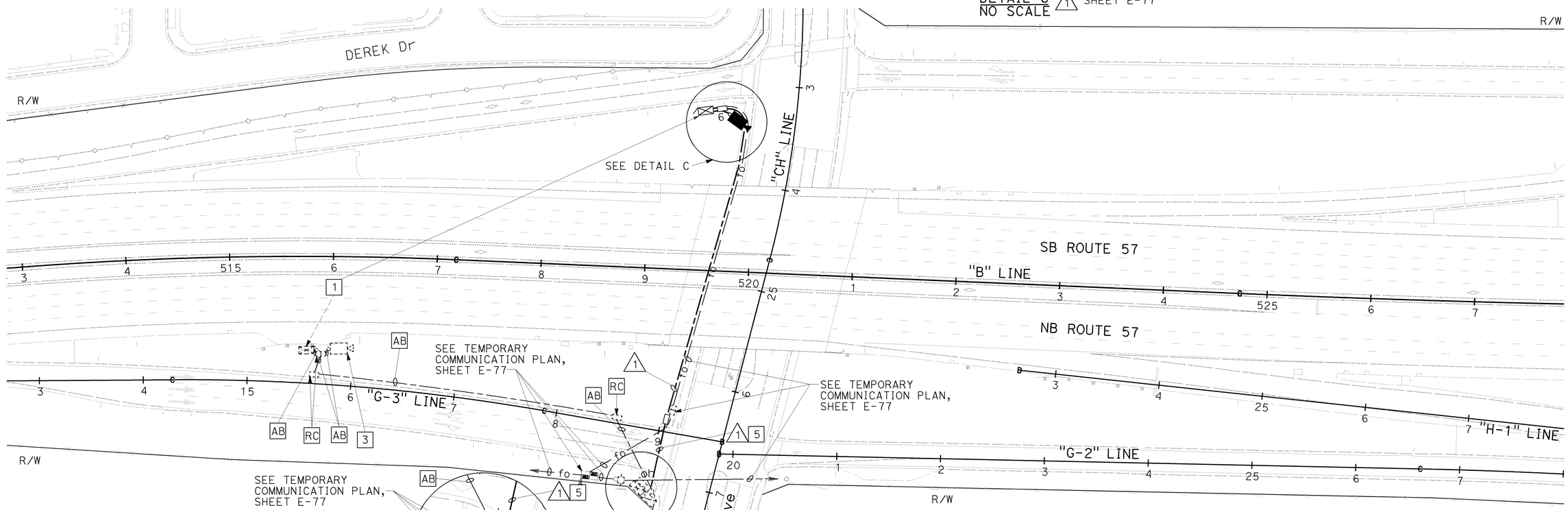

DETAIL B
NO SCALE

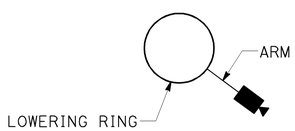

DETAIL A
ORIENTATION OF CCTV MAST ARM
NO SCALE

Exist 120/240 V TYPE III-CF SERVICE EQUIPMENT [4]
ENCLOSURE WITH:

METER A ID#12-55-057-0-017.300
100 A 240 V 2P CB (MAIN)
30 A 120 V 1P CB (TS)

METER B ID#12-55-057-0-017.301
100 A 240 V 2P CB (MAIN)
30 A 120 V 1P CB (SAFETY LIGHTING)
20 A 120 V 1P CB (IRRIGATION)
30 A 120 V 1P CB (CCTV 178)
30 A 120 V 1P CB (HIGH MAST CCTV POLE)(ADD)

NOTES (THIS SHEET):

1. RELOCATE MODEL 334 CCTV CABINET WITH FIBER DISTRIBUTION UNIT AND FIBER OPTIC DATA MODEM AND INSTALL ACTIVE VIDEO SPLITTER.
2. INSTALL CCTV CAMERA ASSEMBLY ON TYPE 60 HIGH MAST POLE. SEE DETAIL A FOR ORIENTATION OF CCTV MAST ARM. SEE SHEET E-46 FOR MOUNTING DETAILS.
3. RS CCTV CAMERA ASSEMBLY AND TYPE 30 POLE.
4. INSTALL 30 A 120 V 1P CB ON METER B FOR HIGH MAST CCTV POLE LOWERING SYSTEM.
5. CONTRACTOR SHALL INSTALL CONDUIT WITH A MINIMUM COVER OF 5' FROM ORIGINAL GRADE.
6. CCTV SYSTEM SHALL BE IN OPERATION AT ALL TIMES.
7. UNLESS OTHERWISE NOTED, PULL BOXES, FOUNDATIONS. AND CONDUITS SAHLL BE PLACED AT ULTIMATE GRADE AND LOCATIONS.
8. FOR COMPLETE RIGHT OF WAY AND ACCURATE ACCESS DATA, SEE RIGHT OF WAY RECORD MAPS AT DISTRICT OFFICE.

CLOSED CIRCUIT TELEVISION SYSTEM (LOCATION 2)
STAGE 1A

SCALE: 1" = 50'

THIS PLAN IS ACCURATE FOR ELECTRICAL WORK ONLY.

E-39

STATE OF CALIFORNIA - DEPARTMENT OF TRANSPORTATION
Caltrans
CONSULTANT FUNCTIONAL SUPERVISOR: CARLOS A. ORTIZ
CALCULATED-DESIGNED BY: JESSICA PARRENO
CHECKED BY: ARMANDO SOLIS
REVISED BY / DATE REVISED

H:\pdata\10105878\Admin\submittals\2009-06-29 FINAL Submittal\100% ELECTRONIC SUBMITTAL - MERGED1-DEES2009\17-Traffic\c0F031ua039.dgn

LAST REVISION 08-01-08 | DATE PLOTTED => 21-DEC-2009 | TIME PLOTTED => 12:56

BORDER LAST REVISED 4/11/2008 | RELATIVE BORDER SCALE IS IN INCHES 0 1 2 3 | USERNAME => trlenard | DGN FILE => c0F031ua039.dgn | CU 12220 | EA 0F0311

NOTE:

FOR COMPLETE RIGHT OF WAY AND ACCURATE ACCESS DATA, SEE RIGHT OF WAY RECORD MAPS AT DISTRICT OFFICE.

CONDUCTOR AND CONDUIT SCHEDULE

AWG OR CABLE	CONDUCTOR RUN	1	2	3
#8	GROUND		1E	1E
#8	CCTV CONTROLLER CABINET	2E		2E
#6	HIGH MAST POLE MOTOR	2E	2E	
CCTV MULTI-CONDUCTOR CABLE			1E	1E
CONDUIT SIZE		2"E	3"E	2-3"E

E=EXISTING TO REMAIN.

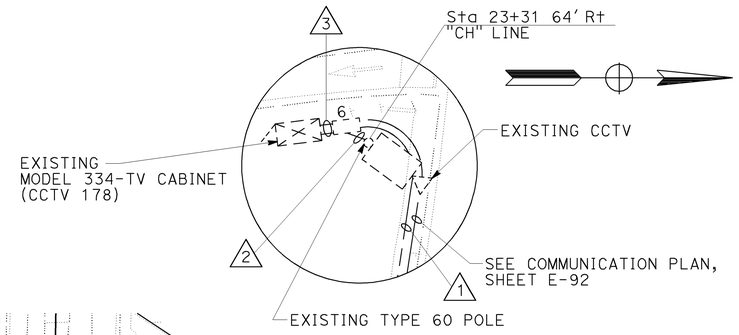

DETAIL C
NO SCALE

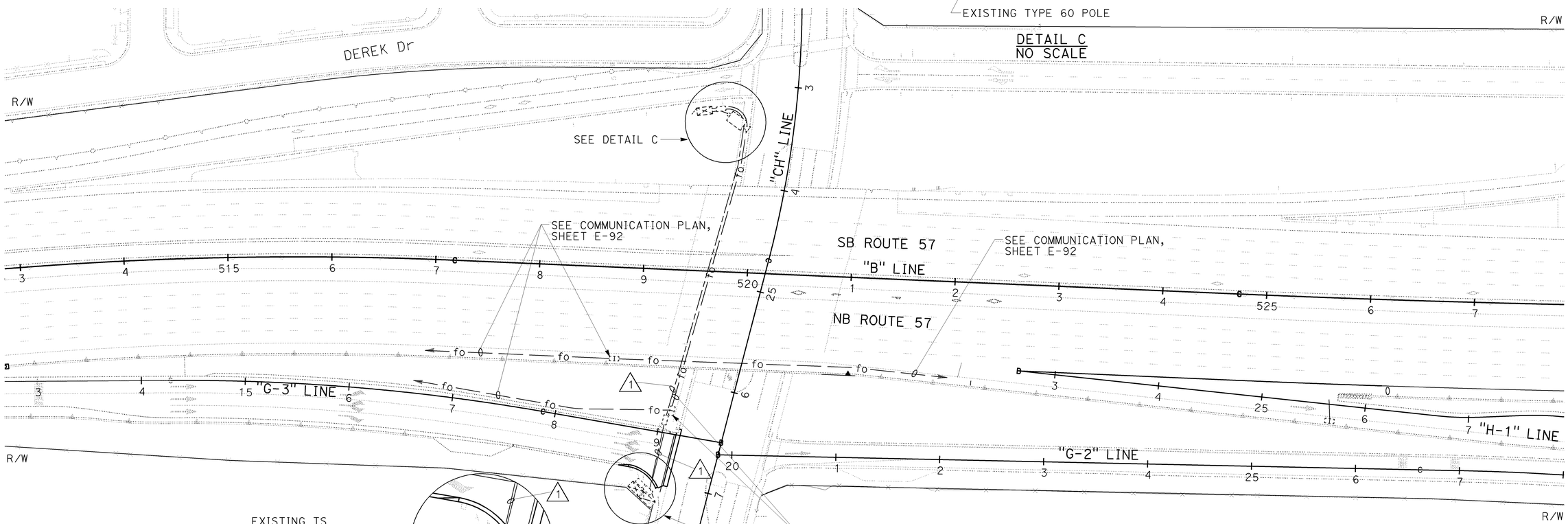

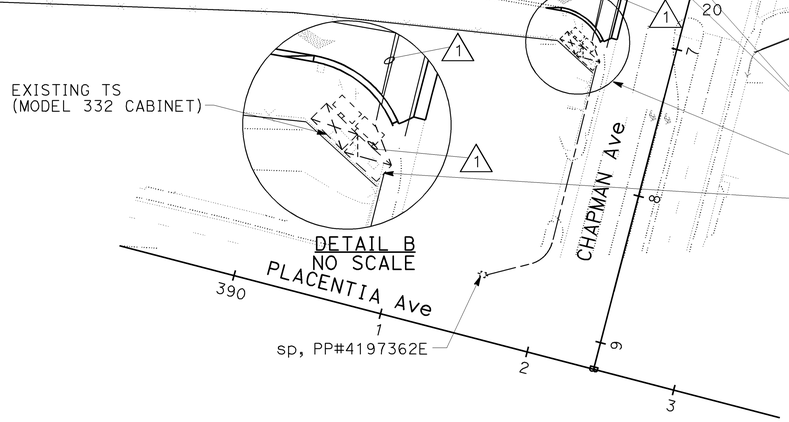

DETAIL B
NO SCALE

SEE COMMUNICATION PLAN, SHEET E-92

SEE DETAIL B

Exist 120/240 V TYPE III-CF SERVICE EQUIPMENT ENCLOSURE WITH:

METER A ID#12-55-057-0-017.300
100 A 240 V 2P CB (MAIN)
30 A 120 V 1P CB (TS)

METER B ID#12-55-057-0-017.301
100 A 240 V 2P CB (MAIN)
30 A 120 V 1P CB (SAFETY LIGHTING)
20 A 120 V 1P CB (IRRIGATION)
30 A 120 V 1P CB (CCTV 178)
30 A 120 V 1P CB (HIGH MAST CCTV POLE)

FOR REFERENCE ONLY

THIS PLAN IS ACCURATE FOR ELECTRICAL WORK ONLY.

CLOSED CIRCUIT TELEVISION SYSTEM (LOCATION 2)

SCALE: 1" = 50'

E-40

Dist	COUNTY	ROUTE	POST MILES TOTAL PROJECT	SHEET No.	TOTAL SHEETS
12	Ora	57	16.2/18.6	600	960

Mark J. Esposito 7/15/09
REGISTERED CIVIL ENGINEER DATE

12-14-09
PLANS APPROVAL DATE

REGISTERED PROFESSIONAL ENGINEER MARK J. ESPOSITO No. 69921 Exp. 9-30-10 CIVIL STATE OF CALIFORNIA

THE STATE OF CALIFORNIA OR ITS OFFICERS OR AGENTS SHALL NOT BE RESPONSIBLE FOR THE ACCURACY OR COMPLETENESS OF SCANNED COPIES OF THIS PLAN SHEET.

RBF CONSULTING
14275 ALTON PKWY
IRVINE, CA 92618

OCTA
550 S. MAIN STREET
ORANGE, CA 92863

STATE OF CALIFORNIA - DEPARTMENT OF TRANSPORTATION
Caltrans

CONSULTANT FUNCTIONAL SUPERVISOR: CARLOS A. ORTIZ
CALCULATED-DESIGNED BY: JESSICA PARRENO
CHECKED BY: ARMANDO SOLIS
REVISED BY
DATE REVISED

H:\pdata\10105878\Admin\submittals\2009-06-29 FINAL Submittal\100% ELECTRONIC SUBMITTAL - MERGED\FDEES2009\traffic\c0F031ua040.dgn

LAST REVISION 08-01-08
DATE PLOTTED => 21-DEC-2009
TIME PLOTTED => 12:56

BORDER LAST REVISED 4/11/2008
RELATIVE BORDER SCALE IS IN INCHES 0 1 2 3
USERNAME => trlenard
DGN FILE => c0F031ua040.dgn
CU 12220
EA 0F0311