Dist	COUNTY	ROUTE	POST MILES TOTAL PROJECT	SHEET No.	TOTAL SHEETS
12	Ora	57	16.2/18.6	1	960

INDEX OF PLANS

SHEET No.	DESCRIPTION
1	TITLE AND LOCATION MAP
2-8	TYPICAL CROSS SECTIONS
9	KEY MAP AND LINE INDEX
10-21	LAYOUTS
22-41	PROFILES AND SUPERELEVATION DIAGRAM
42-91	CONSTRUCTION DETAILS
92-103	TEMPORARY WATER POLLUTION CONTROL PLANS
104-115	MAINTAIN EXISTING PLANTS AND EROSION CONTROL PLANS
116-128	CONTOUR GRADING
129-171	DRAINAGE PLAN, PROFILE, DETAILS AND QUANTITIES
172-180	EDGE DRAIN PLAN
181-192	UTILITY PLAN
193-194	CONSTRUCTION AREA SIGNS
195-268	STAGE CONSTRUCTION AND TRAFFIC HANDLING
269-286	TRAFFIC HANDLING PLAN
287-303	PAVEMENT DELINEATION PLANS, DETAILS AND QUANTITIES
304-347	SIGN PLAN, DETAILS, QUANTITIES
348-356	SUMMARY OF QUANTITIES
357-379	RETAINING WALL No. 476
380-412	RETAINING WALL No. 496
413-462	RETAINING WALLS R-1 THROUGH R-50
463-545	SOUND WALL AND RETAINING WALL
546-557	IRRIGATION PLAN
558-559	LANDSCAPE DETAILS
560-686	ELECTRICAL PLANS
687-741	REVISED AND NEW STANDARD PLANS

STRUCTURE PLANS

742-777	STRUCTURAL PLANS - PLACENTIA OH (WIDEN)
778-800	STRUCTURAL PLANS - SOUTH PLACENTIA OH (WIDEN)
801-823	STRUCTURAL PLANS - CHAPMAN AVENUE UC (WIDEN)
824-845	STRUCTURAL PLANS - CROWTHER AVENUE UC (WIDEN)
846-877	STRUCTURAL PLANS - ORANGETHORPE Ave UC (WIDEN)
878-919	STRUCTURAL PLANS - PLACENTIA AVENUE UC (WIDEN
920-945	STRUCTURAL PLANS - NUTWOOD AVENUE UC (WIDEN)
946-960	STRUCTURAL PLANS - YORBA LINDA Blvd OC (MODIFY)

THE STANDARD PLANS LIST APPLICABLE TO THIS CONTRACT IS INCLUDED IN THE NOTICE TO BIDDERS AND SPECIAL PROVISIONS BOOK.

THE CONTRACTOR SHALL POSSESS THE CLASS (OR CLASSES) OF LICENSE AS SPECIFIED IN THE "NOTICE TO BIDDERS."

STATE OF CALIFORNIA

DEPARTMENT OF TRANSPORTATION

PROJECT PLANS FOR CONSTRUCTION ON

STATE HIGHWAY

IN ORANGE COUNTY IN PLACENTIA AND FULLERTON FROM 0.2 MILES SOUTH OF ORANGETHORPE AVENUE TO 0.2 MILES NORTH OF YORBA LINDA BOULEVARD

TO BE SUPPLEMENTED BY STANDARD PLANS DATED MAY 2006

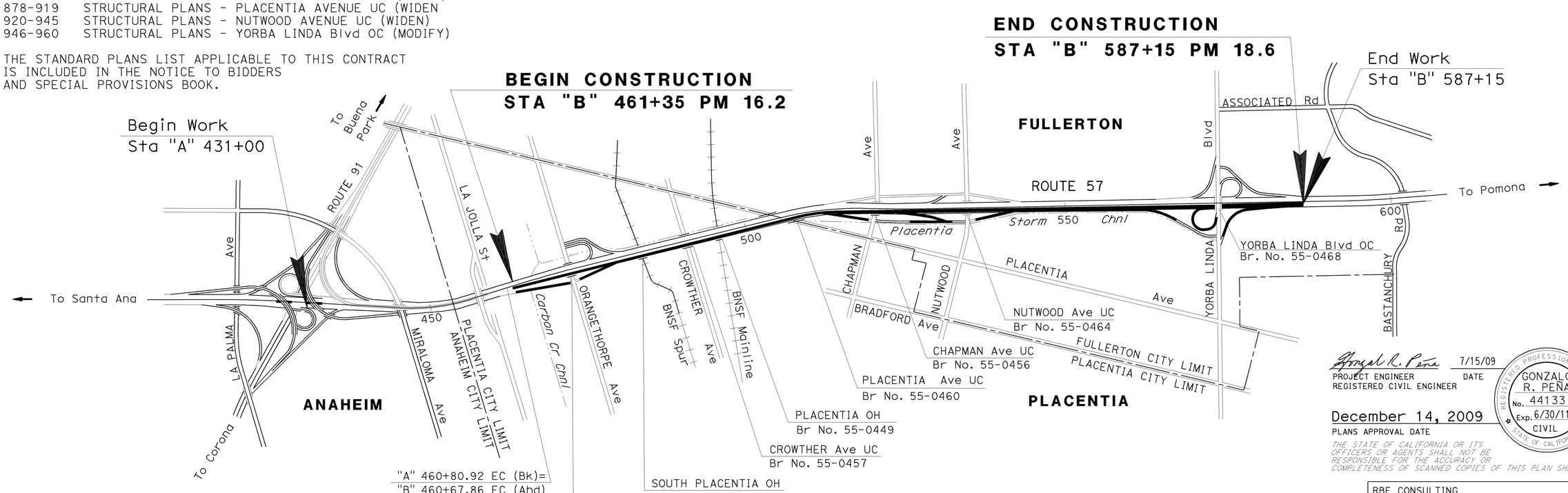

NO SCALE

Gonzalo R. Peña 7/15/09
PROJECT ENGINEER DATE
REGISTERED CIVIL ENGINEER

December 14, 2009
PLANS APPROVAL DATE

REGISTERED PROFESSIONAL ENGINEER
GONZALO R. PEÑA
No. 44133
Exp. 6/30/11
CIVIL
STATE OF CALIFORNIA

THE STATE OF CALIFORNIA OR ITS OFFICERS OR AGENTS SHALL NOT BE RESPONSIBLE FOR THE ACCURACY OR COMPLETENESS OF SCANNED COPIES OF THIS PLAN SHEET.

RBF CONSULTING
14725 ALTON PKWY
IRVINE, CA 92618

OCTA
550 S. MAIN STREET
ORANGE, CA 92863

CONTRACT No. 12-0F0314

APPROVED AS TO IMPACT ON STATE FACILITIES AND CONFORMANCE WITH APPLICABLE STATE STANDARDS AND PRACTICES AND THAT TECHNICAL OVERSIGHT WAS PERFORMED.

CALTRANS DESIGN OVERSIGHT APPROVAL: MILI STAMATION — Mili S. Stam — DATE SIGNED 7/22/109

CONSULTANT DESIGN ENGINEER: GONZALO PEÑA — REGISTRATION No. C44048 — LICENSE Exp DATE 6/30/11

trmikesl 23-DEC-2009 13:59

J:\PSESubmit\0F0311\c0F031ab001.dgn

LAST REVISION 08-01-08 — DATE PLOTTED => 23-DEC-2009 — TIME PLOTTED => 13:59

Dist	COUNTY	ROUTE	POST MILES TOTAL PROJECT	SHEET No.	TOTAL SHEETS
12	Ora	57	16.2/18.6	2	960

REGISTERED CIVIL ENGINEER — 12/8/09 DATE

12-14-09
PLANS APPROVAL DATE

JOSUE J. VAGLIENTY No. 70783 Exp. 6-30-11 CIVIL — REGISTERED PROFESSIONAL ENGINEER — STATE OF CALIFORNIA

THE STATE OF CALIFORNIA OR ITS OFFICERS OR AGENTS SHALL NOT BE RESPONSIBLE FOR THE ACCURACY OR COMPLETENESS OF SCANNED COPIES OF THIS PLAN SHEET.

RBF CONSULTING
14275 ALTON PKWY
IRVINE, CA 92618

OCTA
550 S. MAIN STREET
ORANGE, CA 92863

NOTES:

1. DIMENSIONS OF THE PAVEMENT STRUCTURES (STRUCTURAL SECTIONS) ARE SUBJECT TO TOLERANCES SPECIFIED IN THE STANDARD SPECIFICATIONS.
2. SUPERELEVATION AS SHOWN ON SUPERELEVATION DIAGRAMS OR AS DIRECTED BY THE ENGINEER.
3. FOR CONCRETE PAVEMENT LANE SCHEMATICS, SEE REVISED STANDARD PLAN RSP P18, CASE 2.
4. FOR RETAINING WALL AND SOUNDWALL LOCATIONS, SEE RETAINING WALL AND STRUCTURES PLANS.
5. FOR TYPE AND LOCATION OF CONCRETE BARRIERS, MBGR, CURB AND HMA DIKES, SEE LAYOUT PLANS AND SUMMARY OF QUANTITIES.
6. FOR LOCATIONS OF EDGE DRAINS, SEE EDGE DRAIN PLANS.

STRUCTURAL SECTION TYPES:

1
1.05′ JPCP
0.50′ HMA (TYPE A)
0.70′ CLASS 2 AS
0.65′ LIME STABILIZATION

2
0.90′ JPCP
0.35′ ATPB
0.50′ HMA (TYPE A)
0.70′ CLASS 2 AS
0.65′ LIME STABILIZATION

2A
0.90′ JPCP
0.35′ ATPB
0.50′ HMA (TYPE A)
0.70′ CLASS 2 AS

3
0.20′ RHMA-G
0.60′ HMA (TYPE A)
2.00′ CLASS 2 AB

4
0.55′ HMA (TYPE A)
1.00′ CLASS 2 AB

4A
0.55′ HMA (TYPE A)
0.65′ CLASS 2 AB
0.85′ CLASS 2 AS

4B
0.55′ HMA (TYPE A)
1.00′ CLASS 2 AB
0.65′ LIME STABILIZATION

4C
0.55′ HMA (TYPE A)
0.65′ CLASS 2 AB
0.85′ CLASS 2 AS
0.65′ LIME STABILIZATION

4D
0.20′ RHMA-G
0.35′ HMA (TYPE A)
1.00′ CLASS 2 AB

5
0.65′ HMA (TYPE A)
1.40′ CLASS 2 AB
0.65′ LIME STABILIZATION

5A
1.25′ HMA (TYPE A)

5B
0.65′ HMA (TYPE A)
1.40′ CLASS 2 AB

6
0.60′ HMA (TYPE A)
0.25′ ATPB
1.20′ CLASS 2 AB

7
0.75′ HMA (TYPE A)
0.65′ CLASS 2 AB
1.15′ CLASS 2 AS
0.65′ LIME STABILIZATION

7A
1.45′ HMA (TYPE A)

8
0.80′ HMA (TYPE A)
0.55′ CLASS 2 AB
1.35′ CLASS 2 AS
0.65′ LIME STABILIZATION

9
0.85′ Conc Pvmt (RAPID STRENGTH)
0.40′ Conc BASE (RAPID STRENGTH)
0.60′ CLASS 2 AS

10
0.20′ & Var HMA (TYPE A) OVERLAY

11
0.20′ & Var COLD PLANE AC Pvmt
0.20′ & Var HMA (TYPE A) OVERLAY

12
SLURRY SEAL

13
0.20′ & Var COLD PLANE AC Pvmt
0.20′ & Var RHMA-G

14
0.40′ HMA (TYPE A)
0.65′ CLASS 2 AB

15
0.50′ HMA (TYPE A)
0.35′ CLASS 2 AB
0.45′ CLASS 2 AS

16
1.10′ HMA (TYPE A)

17
0.75′ JPCP
0.40′ HMA (TYPE A)
0.50′ CLASS 2 AS

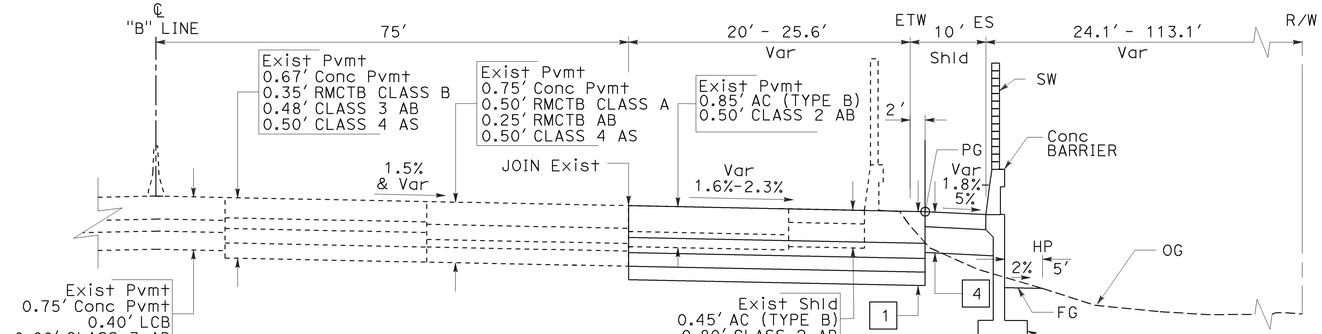

NORTHBOUND ROUTE 57
"B" Sta 473+45.13 TO "B" Sta 483+87.42

EDGE CONDITION
"B" Sta 461+35 TO
"B" Sta 462+80

NORTHBOUND ROUTE 57
"A" Sta 460+22.59 TO "B" Sta 471+12.01

* Sta 467+30 TO 471+12.01
** Sta 465+50.56 TO 471+12.01

DESIGN DESIGNATION (NB ROUTE 57)

2006 ADT = 137,000 T = 8%
2035 ADT = 155,000 V = 70 MPH
ESAL = 83,000,000 TI = 15.5

ABBREVIATIONS:

LS - LIME STABILIZATION
RHMA-G - RUBBERIZED HOT MIX ASPHALT (GAP GRADED)
RMCTB - ROAD-MIXED CEMENT TREATED BASE

TYPICAL SECTIONS

NO SCALE

X-1

H:\pdata\10105878\Admin\submittals\2009-07-15 FINAL Electronic-Only Submittal\DGN and PLOT Files\c0F031ca001.dgn

STATE OF CALIFORNIA - DEPARTMENT OF TRANSPORTATION | CONSULTANT FUNCTIONAL SUPERVISOR: GONZALO PEÑA | CALCULATED-DESIGNED BY: JOHN CURTIS | CHECKED BY: JOSUE VAGLIENTY | REVISED BY: JJV | DATE REVISED: 12/03/09

LAST REVISION | DATE PLOTTED => 15-DEC-2009 | TIME PLOTTED => 14:24 | 12-08-09

BORDER LAST REVISED 4/11/2008 | RELATIVE BORDER SCALE IS IN INCHES 0 1 2 3 | USERNAME => trolandt | DGN FILE => c0F031ca001.dgn | CU 12220 | EA 0F0311

Dist	COUNTY	ROUTE	POST MILES TOTAL PROJECT	SHEET No.	TOTAL SHEETS
12	Ora	57	16.2/18.6	3	960

REGISTERED CIVIL ENGINEER — DATE 12/08/09

12-14-09
PLANS APPROVAL DATE

REGISTERED PROFESSIONAL ENGINEER — JOSUE J. VAGLIENTY — No. 70783 — Exp. 6-30-11 — CIVIL — STATE OF CALIFORNIA

THE STATE OF CALIFORNIA OR ITS OFFICERS OR AGENTS SHALL NOT BE RESPONSIBLE FOR THE ACCURACY OR COMPLETENESS OF SCANNED COPIES OF THIS PLAN SHEET.

RBF CONSULTING
14275 ALTON PKWY
IRVINE, CA 92618

OCTA
550 S. MAIN STREET
ORANGE, CA 92863

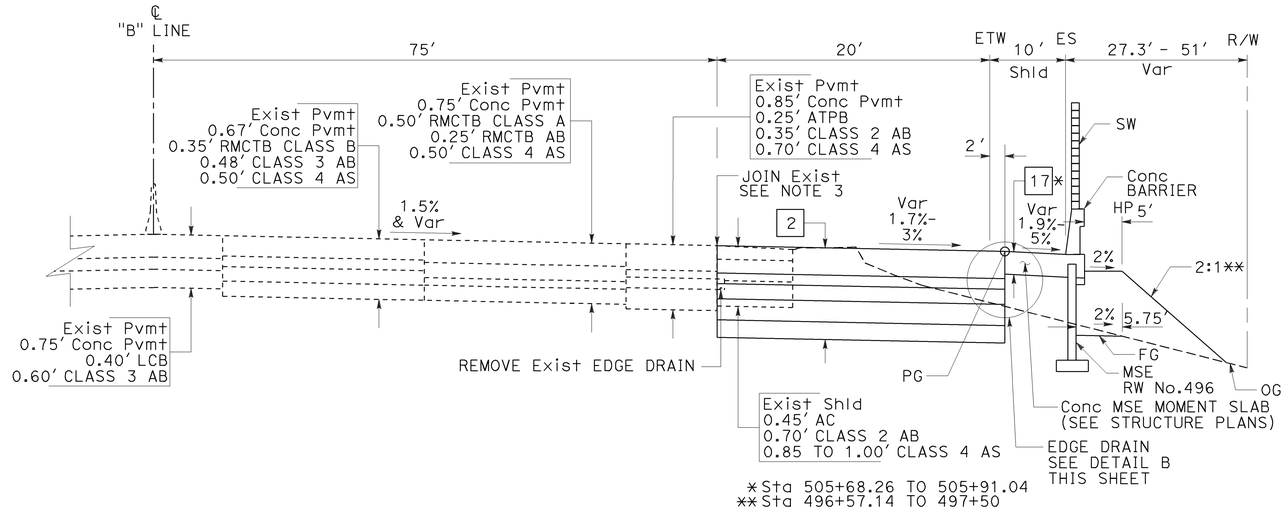

NORTHBOUND ROUTE 57

"B" Sta 496+57.14 TO "B" Sta 505+68.26

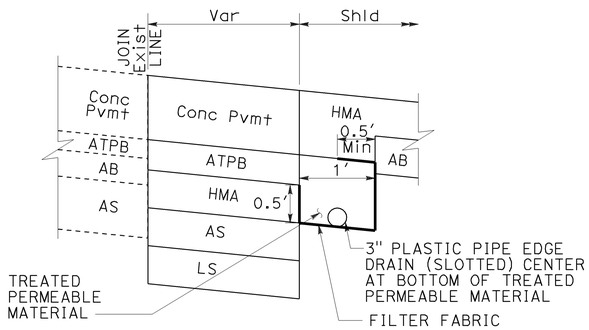

DETAIL A

FOR DETAILS NOT SHOWN,
SEE Std PLAN No. D99A.

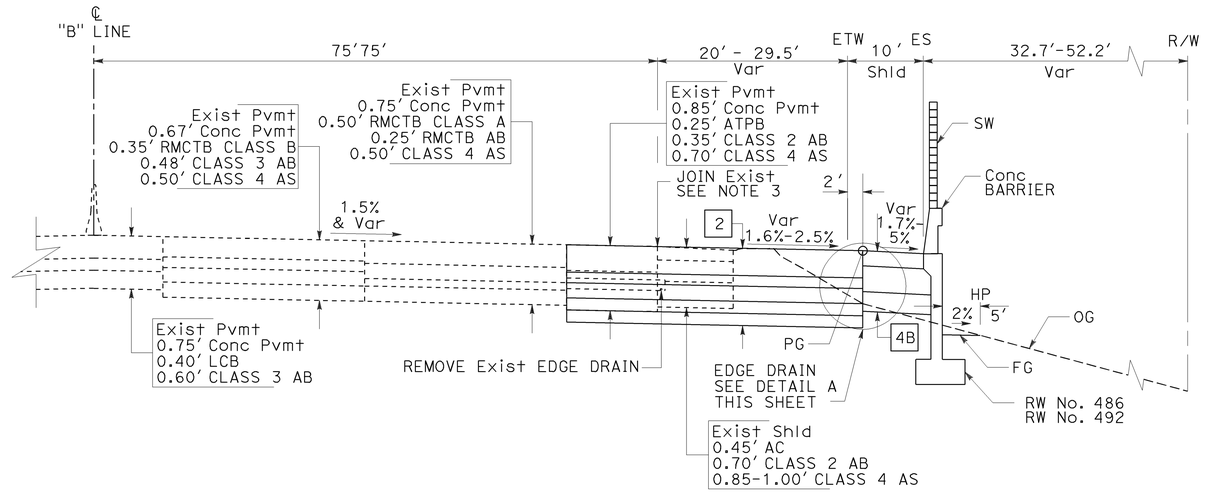

NORTHBOUND ROUTE 57

"B" Sta 491+69.79 TO "B" Sta 494+44.44
"B" Sta 485+09.51 TO "B" Sta 489+57.86

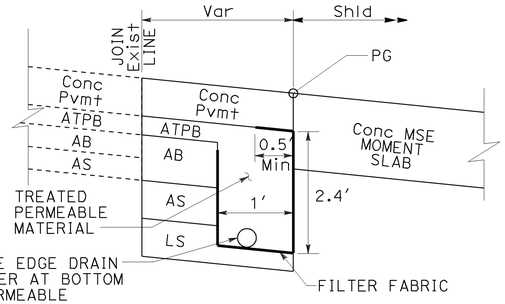

DETAIL B

FOR DETAILS NOT SHOWN,
SEE Std PLAN D99A.

TYPICAL SECTIONS

NO SCALE

X-2

REVISED BY	DATE REVISED
JJV	12/04/09
JJV	07/09/09

CALCULATED-DESIGNED BY: JOHN CURTIS
CHECKED BY: JOSUE VAGLIENTY
CONSULTANT FUNCTIONAL SUPERVISOR: GONZALO PENA

STATE OF CALIFORNIA - DEPARTMENT OF TRANSPORTATION

H:\pdata\10105878\Admin\submittals\2009-06-29 FINAL Submittal\100% ELECTRONIC SUBMITTAL - MERGED\DESIGN\c0F031ca002.dgn

LAST REVISION DATE PLOTTED => 15-DEC-2009
12-08-09 TIME PLOTTED => 14:24

BORDER LAST REVISED 4/11/2008

RELATIVE BORDER SCALE IS IN INCHES 0 1 2 3

USERNAME => troland
DGN FILE => c0F031ca002.dgn

CU 12220

EA 0F0311

Dist	COUNTY	ROUTE	POST MILES TOTAL PROJECT	SHEET No.	TOTAL SHEETS
12	Ora	57	16.2/18.6	4	960

REGISTERED CIVIL ENGINEER 12/3/09 DATE

12-14-09
PLANS APPROVAL DATE

REGISTERED PROFESSIONAL ENGINEER JOSUE J. VAGLIENTY No. 70783 Exp. 6-30-11 CIVIL STATE OF CALIFORNIA

THE STATE OF CALIFORNIA OR ITS OFFICERS OR AGENTS SHALL NOT BE RESPONSIBLE FOR THE ACCURACY OR COMPLETENESS OF SCANNED COPIES OF THIS PLAN SHEET.

RBF CONSULTING
14275 ALTON PKWY
IRVINE, CA 92618

OCTA
550 S. MAIN STREET
ORANGE, CA 92863

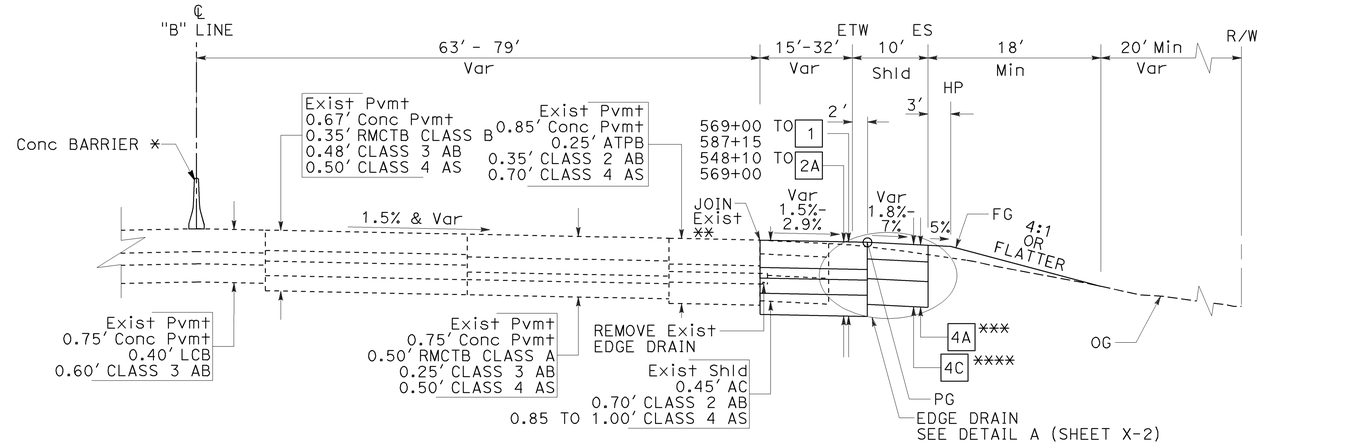

NORTHBOUND ROUTE 57

"B" Sta 548+10 TO "B" Sta 587+15

* Sta 548+10 TO 571+64
** SEE NOTE 3 FOR Sta 548+10 TO 569+00
*** Sta 548+10 TO 569+00
**** Sta 569+00 TO 587+15

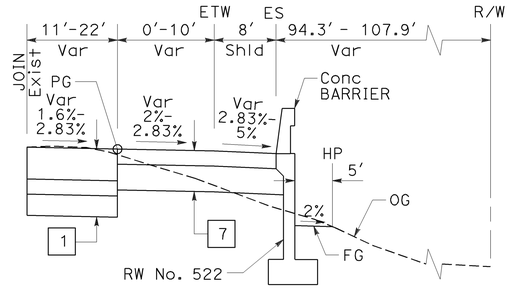

EDGE CONDITION

"B" Sta 521+05.69 TO "B" Sta 522+65

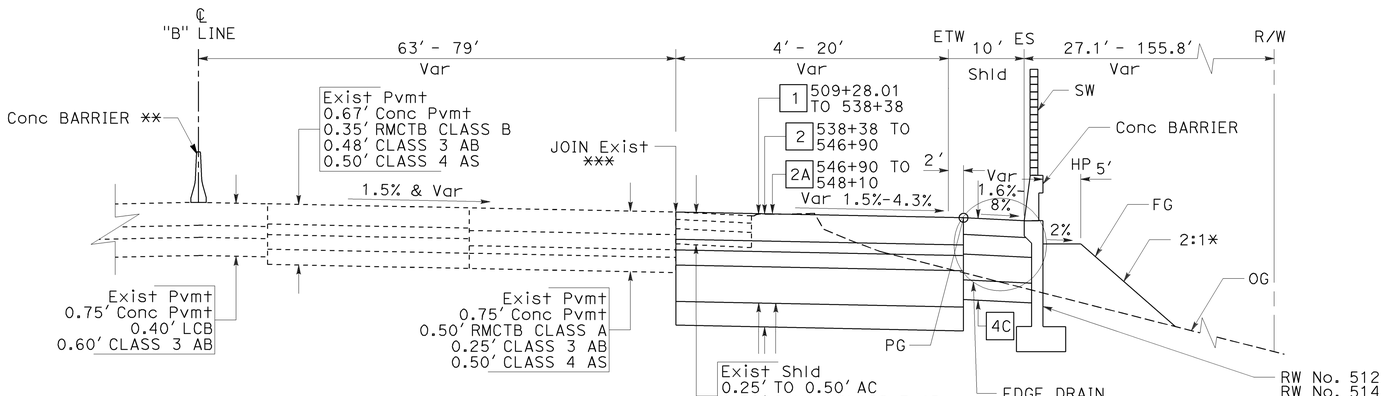

NORTHBOUND ROUTE 57

"B" Sta 535+62.43 TO "B" Sta 548+10
"B" Sta 521+15.32 TO "B" Sta 533+46
"B" Sta 509+28.01 TO "B" Sta 518+96.25

* Sta 528+50 TO 533+72.57
Sta 535+32.57 TO 537+20
** Sta 535+54 TO 548+10
Sta 509+35 TO 511+42
*** SEE NOTE 3 FOR Sta 538+30 TO 548+10

TYPICAL SECTIONS

NO SCALE

X-3

STATE OF CALIFORNIA - DEPARTMENT OF TRANSPORTATION
Caltrans
CONSULTANT FUNCTIONAL SUPERVISOR: GONZALO PEÑA
CALCULATED-DESIGNED BY: JOHN CURTIS
CHECKED BY: JOSUE VAGLIENTY
REVISED BY
DATE REVISED

H:\pdata\10105878\Admin\submittals\2009-06-29 FINAL Submittal\100% ELECTRONIC SUBMITTAL - MERGED FILES\2009\C0F031ca003.dgn

LAST REVISION 08-01-08
DATE PLOTTED => 15-DEC-2009
TIME PLOTTED => 14:24

BORDER LAST REVISED 4/11/2008
RELATIVE BORDER SCALE IS IN INCHES 0 1 2 3
USERNAME => trolandt
DGN FILE => c0F031ca003.dgn
CU 12220
EA 0F0311

Dist	COUNTY	ROUTE	POST MILES TOTAL PROJECT	SHEET No.	TOTAL SHEETS
12	Ora	57	16.2/18.6	5	960

REGISTERED CIVIL ENGINEER — 7/15/09 DATE

JOSUE J. VAGLIENTY No. 70783 Exp. 6-30-11 CIVIL — REGISTERED PROFESSIONAL ENGINEER — STATE OF CALIFORNIA

12-14-09
PLANS APPROVAL DATE

THE STATE OF CALIFORNIA OR ITS OFFICERS OR AGENTS SHALL NOT BE RESPONSIBLE FOR THE ACCURACY OR COMPLETENESS OF SCANNED COPIES OF THIS PLAN SHEET.

RBF CONSULTING
14275 ALTON PKWY
IRVINE, CA 92618

OCTA
550 S. MAIN STREET
ORANGE, CA 92863

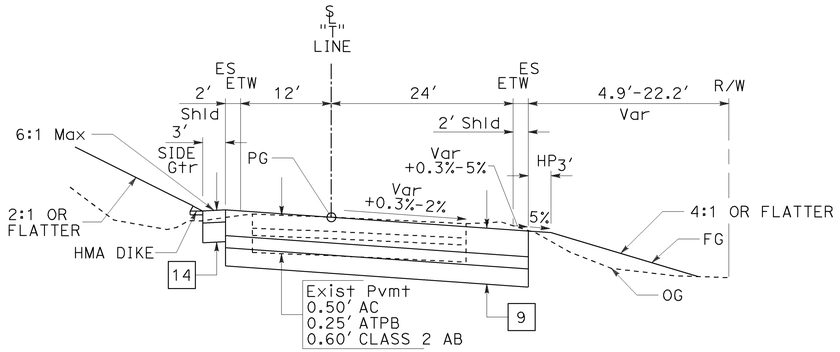

"T" RAMP
Sta 70+15.82 TO Sta 71+72.15

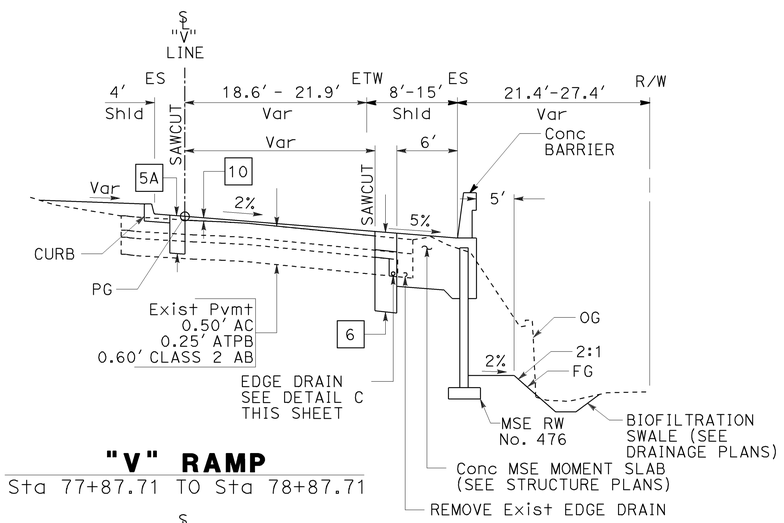

"V" RAMP
Sta 77+87.71 TO Sta 78+87.71

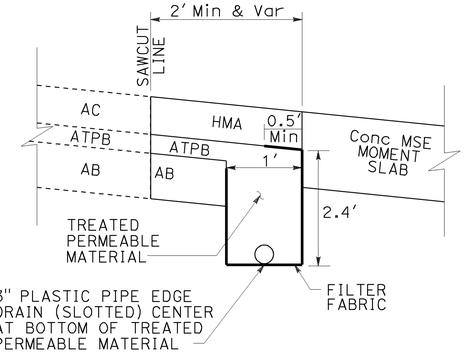

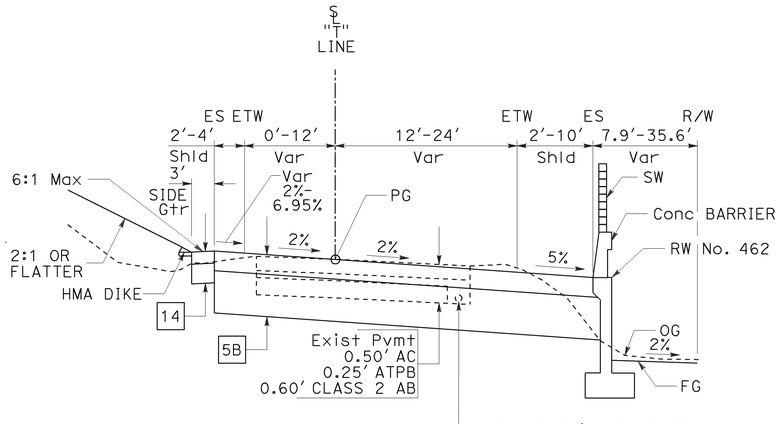

"T" RAMP
Sta 65+50.64 TO Sta 70+15.82

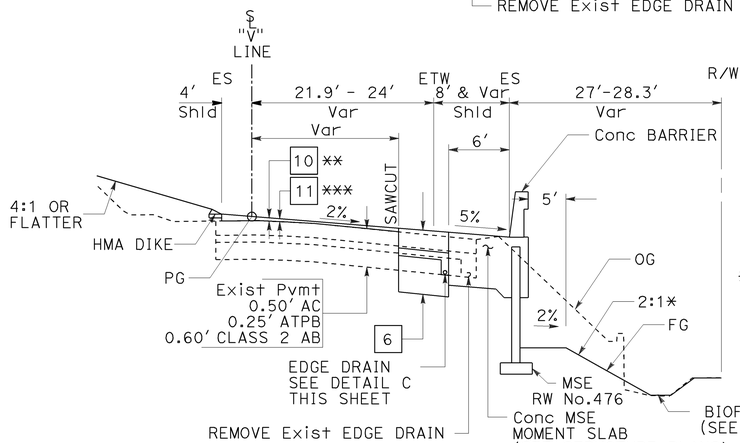

* Sta 76+50 TO 77+87.71
** Sta 75+65 TO 78+87.71
*** Sta 75+35 TO 75+65

DETAIL C
FOR DETAILS NOT SHOWN,
SEE Std PLAN D99A.

"V" RAMP
Sta 75+35 TO Sta 77+87.71

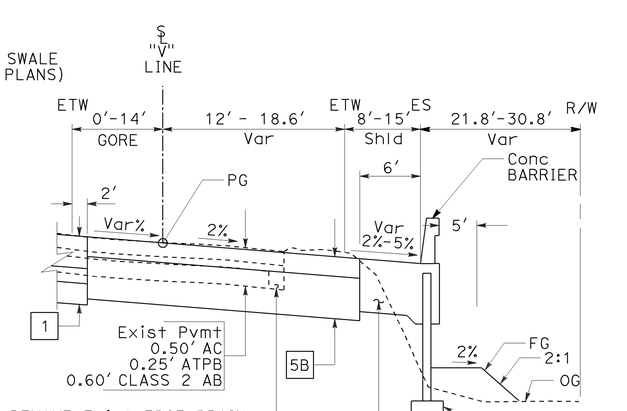

"V" RAMP
Sta 78+87.71 TO Sta 83+85

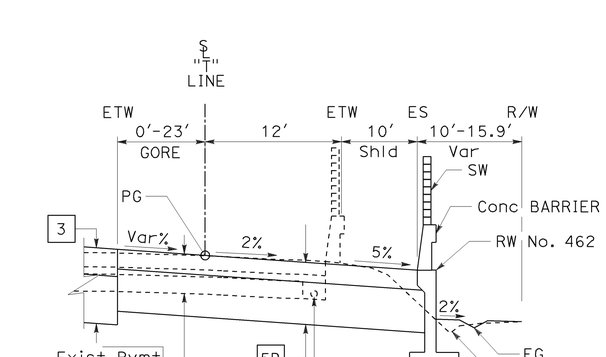

"T" RAMP
Sta 62+80 TO Sta 65+50.64

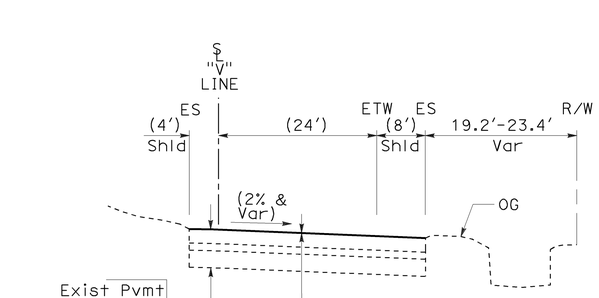

"V" RAMP
Sta 72+83.56 TO Sta 75+35

TYPICAL SECTIONS
NO SCALE

X-4

H:\pdata\10105878\Admin\submittals\2009-06-29 FINAL Submittal\100% ELECTRONIC SUBMITTAL - MERGED05.DGN 15-DEC-2009 14:25:31 troland

STATE OF CALIFORNIA - DEPARTMENT OF TRANSPORTATION
Caltrans
CONSULTANT FUNCTIONAL SUPERVISOR: GONZALO PEÑA
CALCULATED-DESIGNED BY: JOHN CURTIS
CHECKED BY: JOSUE VAGLIENTY
REVISED BY
DATE REVISED

LAST REVISION: DATE PLOTTED => 15-DEC-2009
08-01-08 TIME PLOTTED => 14:25

BORDER LAST REVISED 4/11/2008
RELATIVE BORDER SCALE IS IN INCHES 0 1 2 3
USERNAME => troland
DGN FILE => c0F031ca004.dgn
CU 12220
EA 0F0311

Dist	COUNTY	ROUTE	POST MILES TOTAL PROJECT	SHEET No.	TOTAL SHEETS
12	Ora	57	16.2/18.6	6	960

REGISTERED CIVIL ENGINEER — 12/8/09 DATE

12-14-09
PLANS APPROVAL DATE

JOSUE J. VAGLIENTY No. 70783 Exp. 6-30-11 CIVIL — REGISTERED PROFESSIONAL ENGINEER — STATE OF CALIFORNIA

THE STATE OF CALIFORNIA OR ITS OFFICERS OR AGENTS SHALL NOT BE RESPONSIBLE FOR THE ACCURACY OR COMPLETENESS OF SCANNED COPIES OF THIS PLAN SHEET.

RBF CONSULTING
14275 ALTON PKWY
IRVINE, CA 92618

OCTA
550 S. MAIN STREET
ORANGE, CA 92863

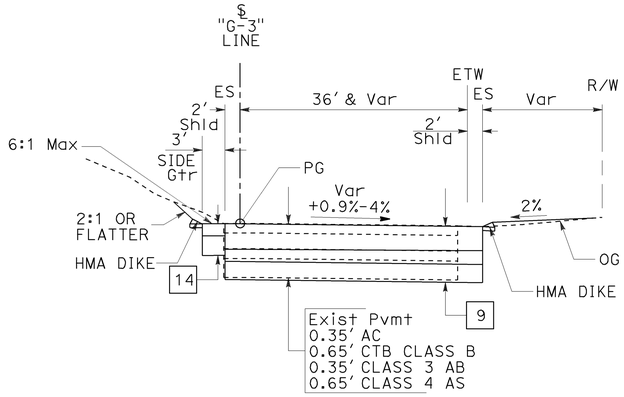

"G-3" RAMP
Sta 17+65 TO Sta 19+18.05

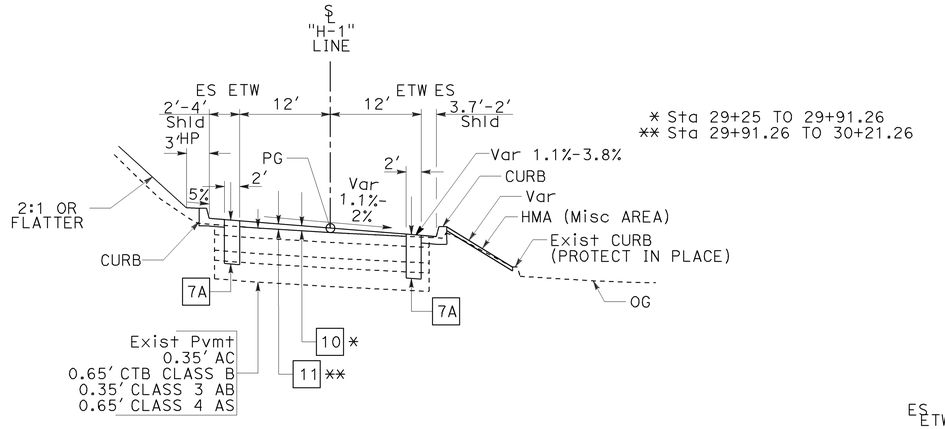

"H-1" RAMP
Sta 28+75 TO Sta 30+21.26

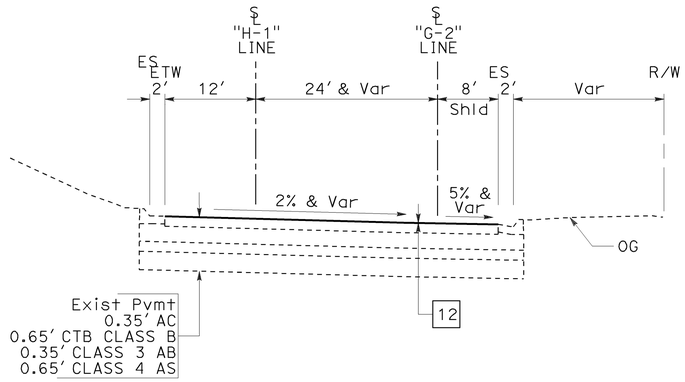

"H-1 & G-2" RAMP
Sta "H-1" 30+21.26 TO Sta "H-1" 34+18.96
Sta "G-2" 30+50.65 TO Sta "G-2" 34+23.21

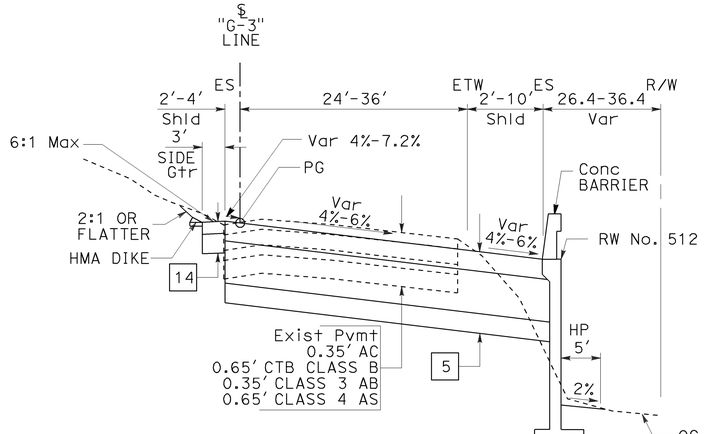

"G-3" RAMP
Sta 12+41.91 TO Sta 17+65

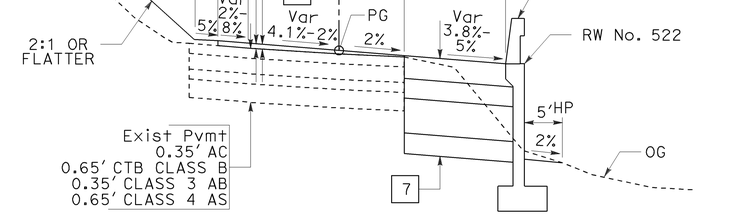

"H-1" RAMP
Sta 25+73.29 TO Sta 28+75

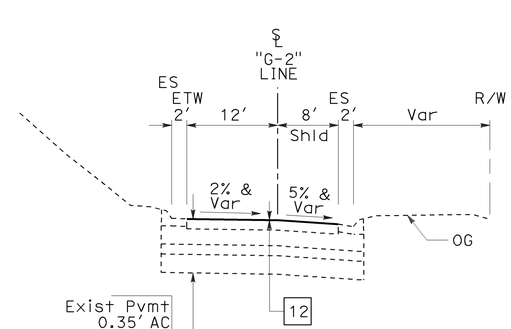

"G-2" RAMP
Sta 20+32.01 TO Sta 30+50.65

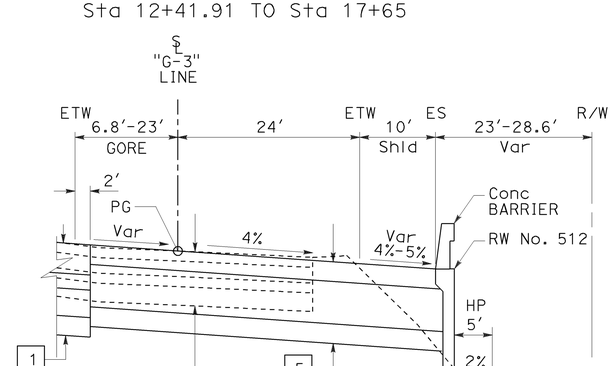

"G-3" RAMP
Sta 10+49.47 TO Sta 12+41.91

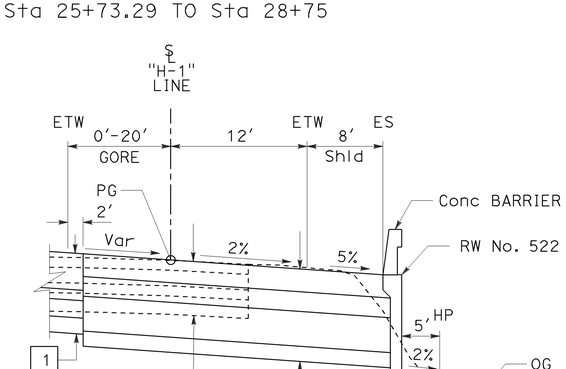

"H-1" RAMP
Sta 22+65 TO Sta 25+73.29

TYPICAL SECTIONS
NO SCALE

X-5

LAST REVISION DATE PLOTTED => 15-DEC-2009
TIME PLOTTED => 14:25

STATE OF CALIFORNIA - DEPARTMENT OF TRANSPORTATION
Caltrans
CONSULTANT FUNCTIONAL SUPERVISOR: GONZALO PEÑA
CALCULATED-DESIGNED BY: JOHN CURTIS
CHECKED BY: JOSUE VAGLIENTY
REVISED BY: JJV
DATE REVISED: 12/03/09

H:\pdata\10105878\Admin\submittals\2009-07-15 FINAL Electronic-Only Submittal\DGN and PLOT Files\c0F031ca005.dgn

BORDER LAST REVISED 4/11/2008
RELATIVE BORDER SCALE IS IN INCHES 0 1 2 3
USERNAME => troiandt
DGN FILE => c0F031ca005.dgn
CU 12220
EA 0F0311

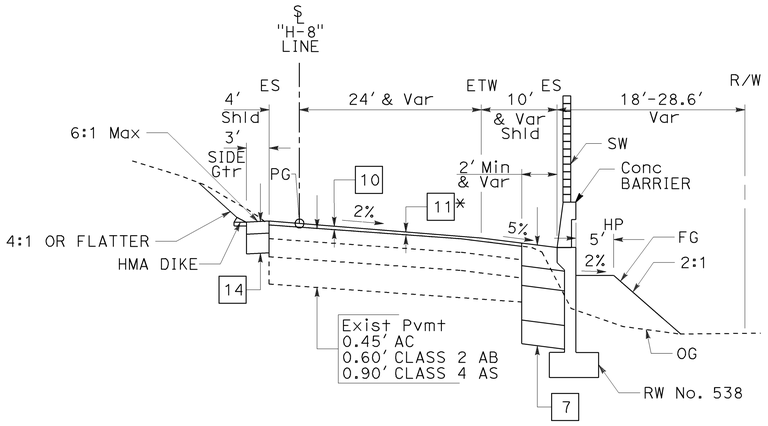

* Sta 41+75 TO 42+24.02

"H-8" RAMP
Sta 39+40 TO Sta 42+24.02

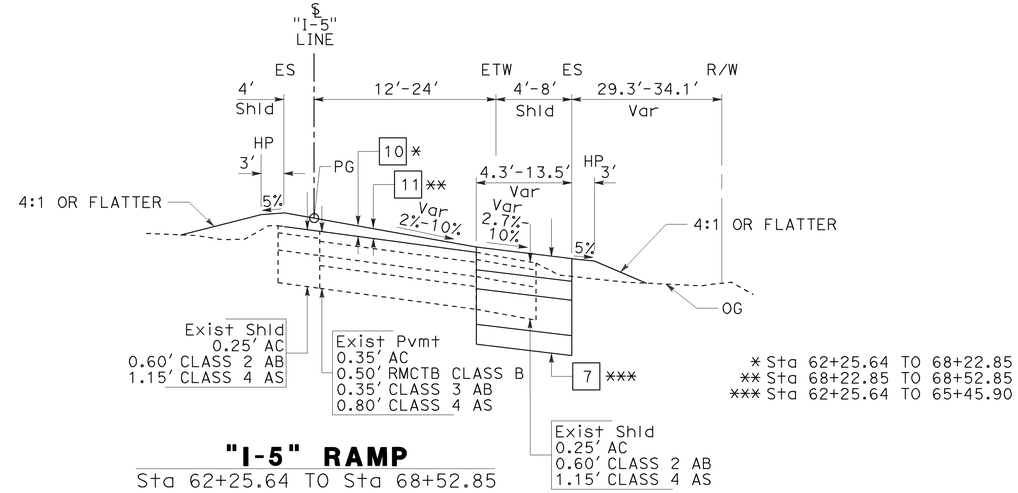

* Sta 62+25.64 TO 68+22.85
** Sta 68+22.85 TO 68+52.85
*** Sta 62+25.64 TO 65+45.90

"I-5" RAMP
Sta 62+25.64 TO Sta 68+52.85

* Sta 38+10 TO 39+40
** Sta 37+80 TO 38+10
*** Sta 38+16.12 TO 39+40

"H-8" RAMP
Sta 37+80 TO Sta 39+40

"I-5" RAMP
Sta 59+55 TO Sta 62+25.64

"I-5" RAMP
Sta 68+52.85 TO Sta 69+80

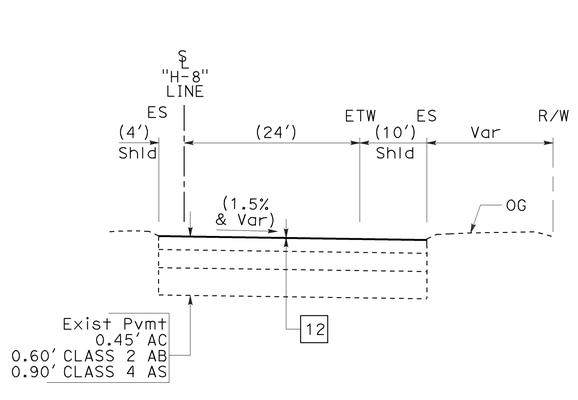

"H-8" RAMP
Sta 34+85.87 TO Sta 37+80

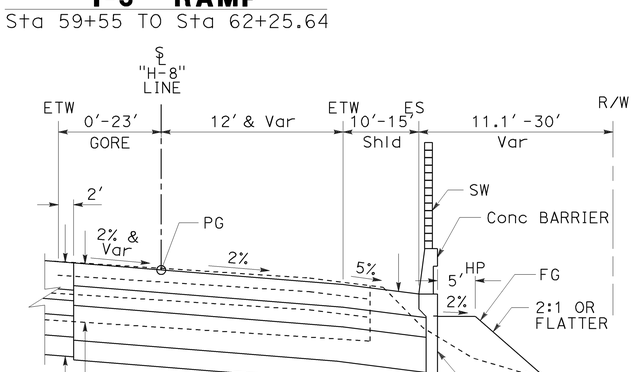

"H-8" RAMP
Sta 42+24.02 TO Sta 48+10

TYPICAL SECTIONS
NO SCALE

X-6

Dist	COUNTY	ROUTE	POST MILES TOTAL PROJECT	SHEET No.	TOTAL SHEETS
12	Ora	57	16.2/18.6	7	960

REGISTERED CIVIL ENGINEER — 12/8/09 DATE

12-14-09
PLANS APPROVAL DATE

REGISTERED PROFESSIONAL ENGINEER — JOSUE J. VAGLIENTY No. 70783 Exp. 6-30-11 CIVIL — STATE OF CALIFORNIA

THE STATE OF CALIFORNIA OR ITS OFFICERS OR AGENTS SHALL NOT BE RESPONSIBLE FOR THE ACCURACY OR COMPLETENESS OF SCANNED COPIES OF THIS PLAN SHEET.

RBF CONSULTING
14275 ALTON PKWY
IRVINE, CA 92618

OCTA
550 S. MAIN STREET
ORANGE, CA 92863

DESIGN	REVISED BY	DATE REVISED
CALCULATED-DESIGNED BY: JOHN CURTIS	JJV	12/03/09
CHECKED BY: JOSUE VAGLIENTY		

CONSULTANT FUNCTIONAL SUPERVISOR: GONZALO PEÑA

STATE OF CALIFORNIA - DEPARTMENT OF TRANSPORTATION

Caltrans

H:\pdata\10105878\Admin\submittals\2009-07-15 FINAL Electronic-Only Submittal\DGN and PLOT Files\c0F031ca006-20090731x1250.dgn

LAST REVISION DATE PLOTTED => 15-DEC-2009
TIME PLOTTED => 14:25

BORDER LAST REVISED 4/11/2008

RELATIVE BORDER SCALE IS IN INCHES 0 1 2 3

USERNAME => troland
DGN FILE => c0F031ca006.dgn

CU 12220

EA 0F0311

Dist	COUNTY	ROUTE	POST MILES TOTAL PROJECT	SHEET No.	TOTAL SHEETS
12	Ora	57	16.2/18.6	8	960

REGISTERED CIVIL ENGINEER — 12/8/09 DATE

12-14-09
PLANS APPROVAL DATE

REGISTERED PROFESSIONAL ENGINEER — JOSUE J. VAGLIENTY No. 70783 Exp. 6-30-11 CIVIL — STATE OF CALIFORNIA

THE STATE OF CALIFORNIA OR ITS OFFICERS OR AGENTS SHALL NOT BE RESPONSIBLE FOR THE ACCURACY OR COMPLETENESS OF SCANNED COPIES OF THIS PLAN SHEET.

RBF CONSULTING
14275 ALTON PKWY
IRVINE, CA 92618

OCTA
550 S. MAIN STREET
ORANGE, CA 92863

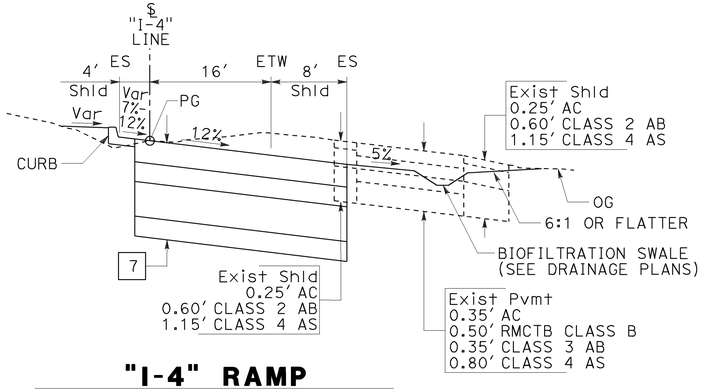

"I-4" RAMP
Sta 70+22.56 TO Sta 71+22.56

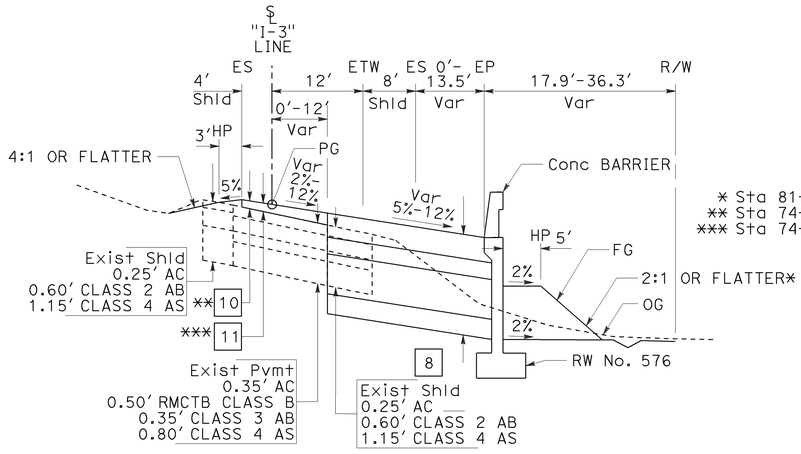

"I-3" RAMP
Sta 74+63.87 TO Sta 81+22.92

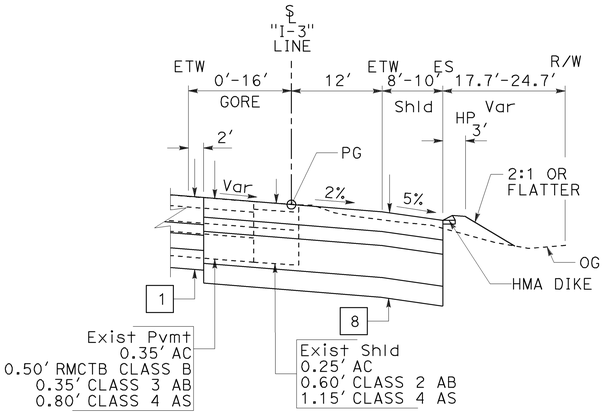

"I-3" RAMP
Sta 82+22.92 TO Sta 87+15

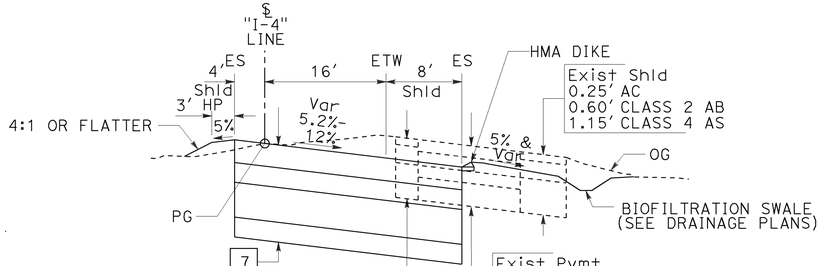

"I-4" RAMP
Sta 64+25 TO Sta 70+22.56

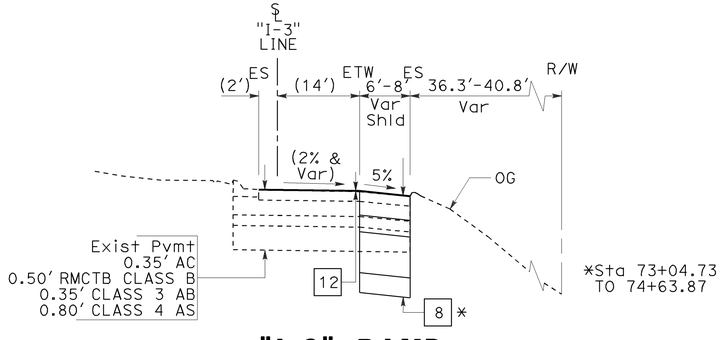

"I-3" RAMP
Sta 71+28.28 TO Sta 74+63.87

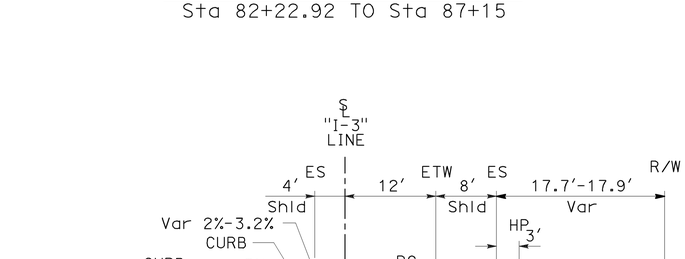

"I-3" RAMP
Sta 81+22.92 To Sta 82+22.92

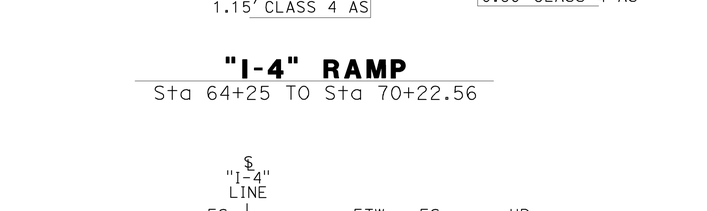

"I-4" RAMP
Sta 63+28 TO Sta 64+25

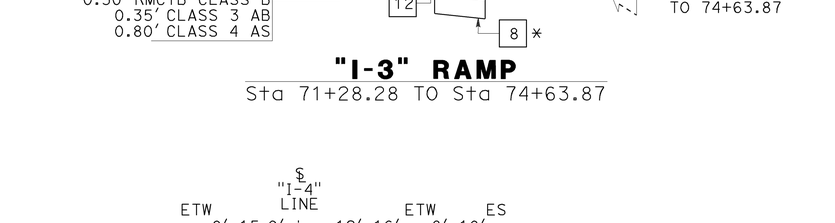

"I-4" RAMP
Sta 71+22.56 TO Sta 76+05

TYPICAL SECTIONS
NO SCALE

X-7

STATE OF CALIFORNIA - DEPARTMENT OF TRANSPORTATION
Caltrans
CONSULTANT FUNCTIONAL SUPERVISOR: GONZALO PEÑA
CALCULATED-DESIGNED BY: JOHN CURTIS
CHECKED BY: JOSUE VAGLIENTY
REVISED BY: JJV
DATE REVISED: 12/03/09

LAST REVISION: DATE PLOTTED => 15-DEC-2009
TIME PLOTTED => 14:25

BORDER LAST REVISED 4/11/2008
RELATIVE BORDER SCALE IS IN INCHES 0 1 2 3
USERNAME => troiandt
DGN FILE => c0F031ca007.dgn
CU 12220
EA 0F0311

H:\pdata\10105878\Admin\submittals\2009-07-15 FINAL Electronic-Only Submittal\DGN and PLOT Files\c0F031ca007.dgn

Dist	COUNTY	ROUTE	POST MILES TOTAL PROJECT	SHEET No.	TOTAL SHEETS
12	Ora	57	16.2/18.6	9	960

REGISTERED CIVIL ENGINEER — DATE 7/15/09

12-14-09
PLANS APPROVAL DATE

REGISTERED PROFESSIONAL ENGINEER — JOSUE J. VAGLIENTY — No. 70783 — Exp. 6-30-11 — CIVIL — STATE OF CALIFORNIA

THE STATE OF CALIFORNIA OR ITS OFFICERS OR AGENTS SHALL NOT BE RESPONSIBLE FOR THE ACCURACY OR COMPLETENESS OF SCANNED COPIES OF THIS PLAN SHEET.

RBF CONSULTING
14275 ALTON PKWY
IRVINE, CA 92618

OCTA
550 S. MAIN STREET
ORANGE, CA 92863

LINE INDEX

LINE NAME	LINE DESCRIPTION	LINE NAME	LINE DESCRIPTION
"A" LINE	ROUTE 57	"CH" LINE	CHAPMAN Ave
"B" LINE	ROUTE 57	"G-2" LINE	NB ON-RAMP/CD ROAD FROM CHAPMAN Ave
"T" LINE	NB-OFF RAMP TO ORANGETHORPE Ave	"H-1" LINE	NB OFF-RAMP TO NUTWOOD Ave
"OT" LINE	ORANGETHORPE Ave	"NA" LINE	NUTWOOD Ave
"V" LINE	NB ON-RAMP FROM ORANGETHORPE Ave	"H-8" LINE	NB ON-RAMP FROM NUTWOOD Ave
"BS" LINE	BNSF SPUR (SOUTH PLACENTIA OH)	"I-5" LINE	NB OFF-RAMP TO YORBA LINDA Blvd
"CA" LINE	CROWTHER Ave	"YL" LINE	YORBA LINDA Blvd
"BM" LINE	BNSF MAINLINE (PLACENTIA OH)	"I-4" LINE	NB LOOP ON-RAMP FROM YORBA LINDA Blvd
"PA" LINE	PLACENTIA Ave	"I-3" LINE	NB ON-RAMP FROM YORBA LINDA Blvd
"G-3" LINE	NB OFF-RAMP TO CHAPMAN Ave		

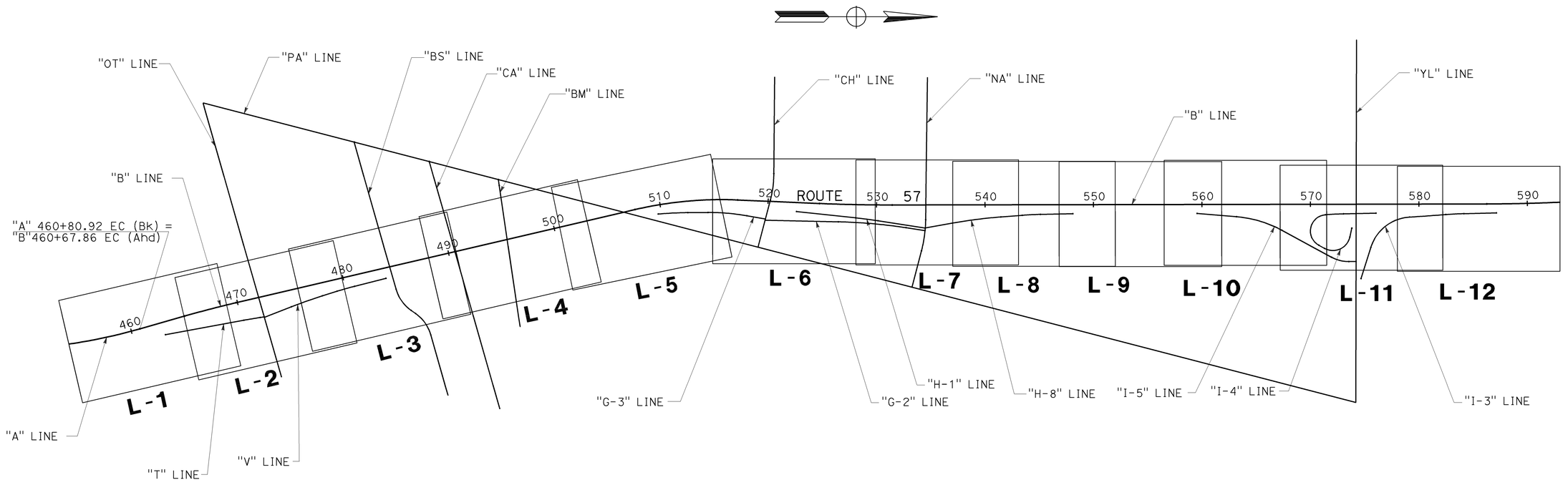

BEARINGS AND COORDINATES AS SHOWN HEREON ARE IN TERMS OF THE CALIFORNIA COORDINATE SYSTEM OF 1983 (CCS83, EPOCH 1991.35), ZONE 6; BASED LOCALLY UPON THE FOLLOWING CONTROL STATIONS PUBLISHED BY THE COUNTY OF ORANGE:
- 3282, N2,247,998.84 FT, E6,069,149.29 FT
- 0560, N2,260,355.81 FT, E6,065,880.43 FT
- 0111, N2,270,990.23 FT, E6,066,809.18 FT

KEY MAP AND LINE INDEX

NO SCALE

K-1

STATE OF CALIFORNIA - DEPARTMENT OF TRANSPORTATION
Caltrans
CONSULTANT FUNCTIONAL SUPERVISOR: GONZALO PEÑA
CALCULATED-DESIGNED BY: SUSAN POMERLEAU
CHECKED BY: JOSUE VAGLIENTY
REVISED BY | DATE REVISED

H:\pdata\10105878\CADD\TransPW\Div\Title_Key_Notes\MERGED 6-24-09\c0F031da001.dgm 15-DEC-2009 14:25 troland

LAST REVISION | DATE PLOTTED => 15-DEC-2009 | TIME PLOTTED => 14:25
08-01-08

BORDER LAST REVISED 4/11/2008

RELATIVE BORDER SCALE IS IN INCHES 0 1 2 3

USERNAME => troland
DGN FILE => c0F031da001.dgn

CU 12220

EA 0F0311

Dist	COUNTY	ROUTE	POST MILES TOTAL PROJECT	SHEET No.	TOTAL SHEETS
12	Ora	57	16.2/18.6	10	960

REGISTERED CIVIL ENGINEER — 12/8/09 DATE

12-14-09
PLANS APPROVAL DATE

JOSUE J. VAGLIENTY No. 70783 Exp. 6-30-11 CIVIL — REGISTERED PROFESSIONAL ENGINEER — STATE OF CALIFORNIA

THE STATE OF CALIFORNIA OR ITS OFFICERS OR AGENTS SHALL NOT BE RESPONSIBLE FOR THE ACCURACY OR COMPLETENESS OF SCANNED COPIES OF THIS PLAN SHEET.

RBF CONSULTING
14275 ALTON PKWY
IRVINE, CA 92618

OCTA
550 S. MAIN STREET
ORANGE, CA 92863

NOTES:

1. FOR COMPLETE R/W AND ACCURATE ACCESS DATA, SEE R/W RECORD MAPS AT DISTRICT OFFICE.
2. FOR REMOVAL OF EXISTING FACILITIES, SEE CONSTRUCTION DETAILS SHEETS.
3. FOR MAINTENANCE VEHICLE PULLOUT (MVP) DETAILS, SEE CONSTRUCTION DETAILS SHEETS.
4. FOR CONCRETE BARRIER, CURB AND DIKE TRANSITIONS, SEE CONSTRUCTION DETAILS SHEETS.
5. FOR LOCATIONS OF MATERIALS WITH AERIALLY DEPOSITED LEAD, SEE CONSTRUCTION DETAILS SHEETS.
6. FOR IRRIGATION CROSSOVERS, SEE CONTOUR GRADING PLANS.

CURVE DATA				
No.	R	Δ	T	L
(1)	5000.00′	20°21′09"	897.50′	1776.11′
(2)	10000.00′	2°47′45"	244.03′	487.96′

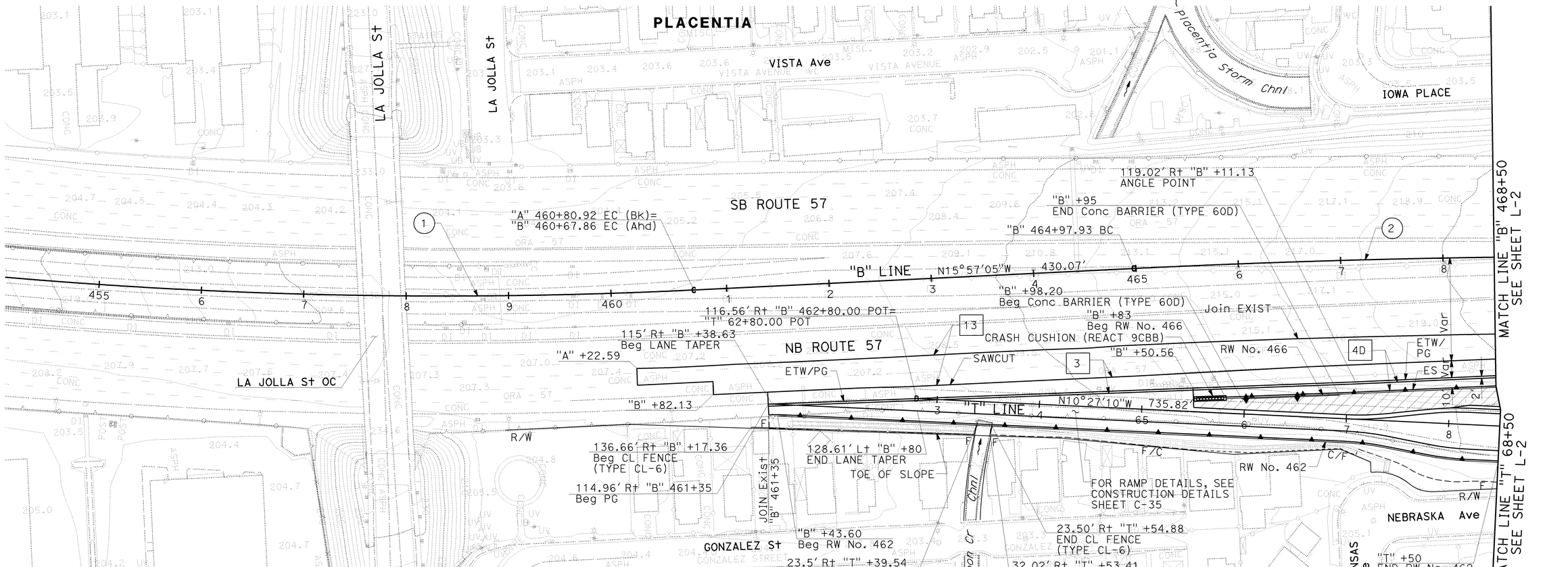

LEGEND

- MINOR CONCRETE (PATTERNED)
- [X] STRUCTURAL SECTION NUMBER (SEE TYPICAL SECTIONS SHEET X-1)
- (X) CURVE DATA NUMBER
- C/F CUT/FILL
- F/C FILL/CUT
- C CUT
- F FILL

ABBREVIATIONS

CHP - CALIFORNIA HIGHWAY PATROL
MVP - MAINTENANCE VEHICLE PULLOUT
TCE - TEMPORARY CONSTRUCTION EASEMENT

LAYOUT

SCALE: 1" = 50′

L-1

STATE OF CALIFORNIA - DEPARTMENT OF TRANSPORTATION | CONSULTANT FUNCTIONAL SUPERVISOR: GONZALO PEÑA | CALCULATED-DESIGNED BY: JOSUE VAGLIENTY | CHECKED BY: JOHN CURTIS | REVISED BY: JJV | DATE REVISED: 12/03/09

H:\pdata\10105878\Admin\submittals\2009-07-15 FINAL Electronic-Only Submittal\DGN\c0f031ea001.dgn
PLOT Files: 2009-12-15 c0f031ea001.dgn

BORDER LAST REVISED 4/11/2008 | RELATIVE BORDER SCALE IS IN INCHES 0 1 2 3 | USERNAME => troland | DGN FILE => c0f031ea001.dgn | CU 12220 | EA 0F0311

LAST REVISION | DATE PLOTTED => 15-DEC-2009 | 12-08-09 | TIME PLOTTED => 14:25

NOTES:

1. FOR ACCURATE RIGHT OF WAY AND ACCESS DATA, CONTACT RIGHT OF WAY ENGINEERING AT THE DISTRICT OFFICE.
2. FOR "T" LINE AND "V" LINE INTERSECTION DETAILS NOT SHOWN, SEE CONSTRUCTION DETAILS SHEETS.
3. FOR ORANGETHORPE Ave DETAILS, SEE CONSTRUCTION DETAILS SHEETS.

CURVE DATA				
No.	R	Δ	T	L
(2)	10000.00′	2°47′45"	244.03′	487.96′
(6)	4500.00′	1°55′52"	75.84′	151.67′
(7)	4500.00′	3°51′26"	151.53′	302.95′
(22)	13924.00′	0°44′25"	89.94′	179.87′
(23)	13922.00′	0°24′42"	39.68′	79.36′

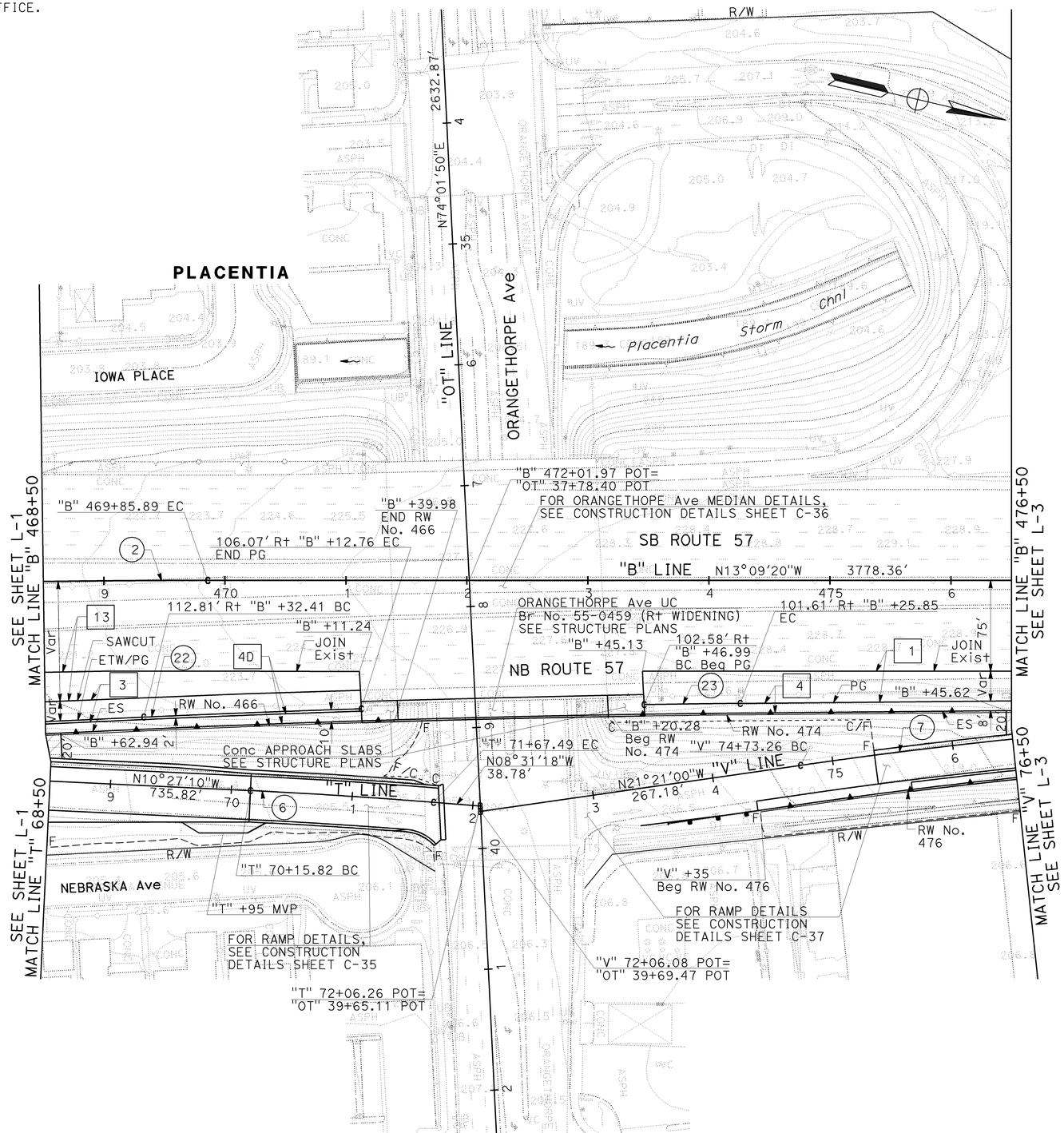

Dist	COUNTY	ROUTE	POST MILES TOTAL PROJECT	SHEET No.	TOTAL SHEETS
12	Ora	57	16.2/18.6	11	960

REGISTERED CIVIL ENGINEER — DATE 12/8/09

JOSUE J. VAGLIENTY No. 70783 Exp. 6-30-11 CIVIL — REGISTERED PROFESSIONAL ENGINEER — STATE OF CALIFORNIA

12-14-09
PLANS APPROVAL DATE

THE STATE OF CALIFORNIA OR ITS OFFICERS OR AGENTS SHALL NOT BE RESPONSIBLE FOR THE ACCURACY OR COMPLETENESS OF SCANNED COPIES OF THIS PLAN SHEET.

RBF CONSULTING
14275 ALTON PKWY
IRVINE, CA 92618

OCTA
550 S. MAIN STREET
ORANGE, CA 92863

LAYOUT
SCALE: 1" = 50′

L-2

REVISED BY	DATE REVISED
JJV	12/03/09

CALCULATED-DESIGNED BY
CHECKED BY

JOHN CURTIS
JOSUE VAGLIENTY

CONSULTANT FUNCTIONAL SUPERVISOR
GONZALO PEÑA

STATE OF CALIFORNIA - DEPARTMENT OF TRANSPORTATION
Caltrans

H:\pdata\10105878\Admin\submittals\2009-07-15 FINAL Electronic-Only Submittal\DGN\trstrk1PLOT File=c0F0311ea002.dgn
trstrk
X=2099.3033 Y=1031

BORDER LAST REVISED 4/11/2008

RELATIVE BORDER SCALE IS IN INCHES 0 1 2 3

USERNAME => trstrk
DGN FILE => c0F031ea002.dgn

CU 12220

EA 0F0311

LAST REVISION 12-08-09 | DATE PLOTTED => 16-DEC-2009 | TIME PLOTTED => 08:31

Dist	COUNTY	ROUTE	POST MILES TOTAL PROJECT	SHEET No.	TOTAL SHEETS
12	Ora	57	16.2/18.6	12	960

REGISTERED CIVIL ENGINEER 12/9/09 DATE

12-14-09
PLANS APPROVAL DATE

REGISTERED PROFESSIONAL ENGINEER JOSUE J. VAGLIENTY No. 70783 Exp. 6-30-11 CIVIL STATE OF CALIFORNIA

THE STATE OF CALIFORNIA OR ITS OFFICERS OR AGENTS SHALL NOT BE RESPONSIBLE FOR THE ACCURACY OR COMPLETENESS OF SCANNED COPIES OF THIS PLAN SHEET.

RBF CONSULTING
14275 ALTON PKWY
IRVINE, CA 92618

OCTA
550 S. MAIN STREET
ORANGE, CA 92863

NOTE:
FOR ACCURATE RIGHT OF WAY AND ACCESS DATA,
CONTACT RIGHT OF WAY ENGINEERING AT THE DISTRICT OFFICE.

CURVE DATA				
No.	R	Δ	T	L
7	4500.00′	3°51′26"	151.53′	302.95′
8	3000.00′	3°11′29"	83.57′	167.10′

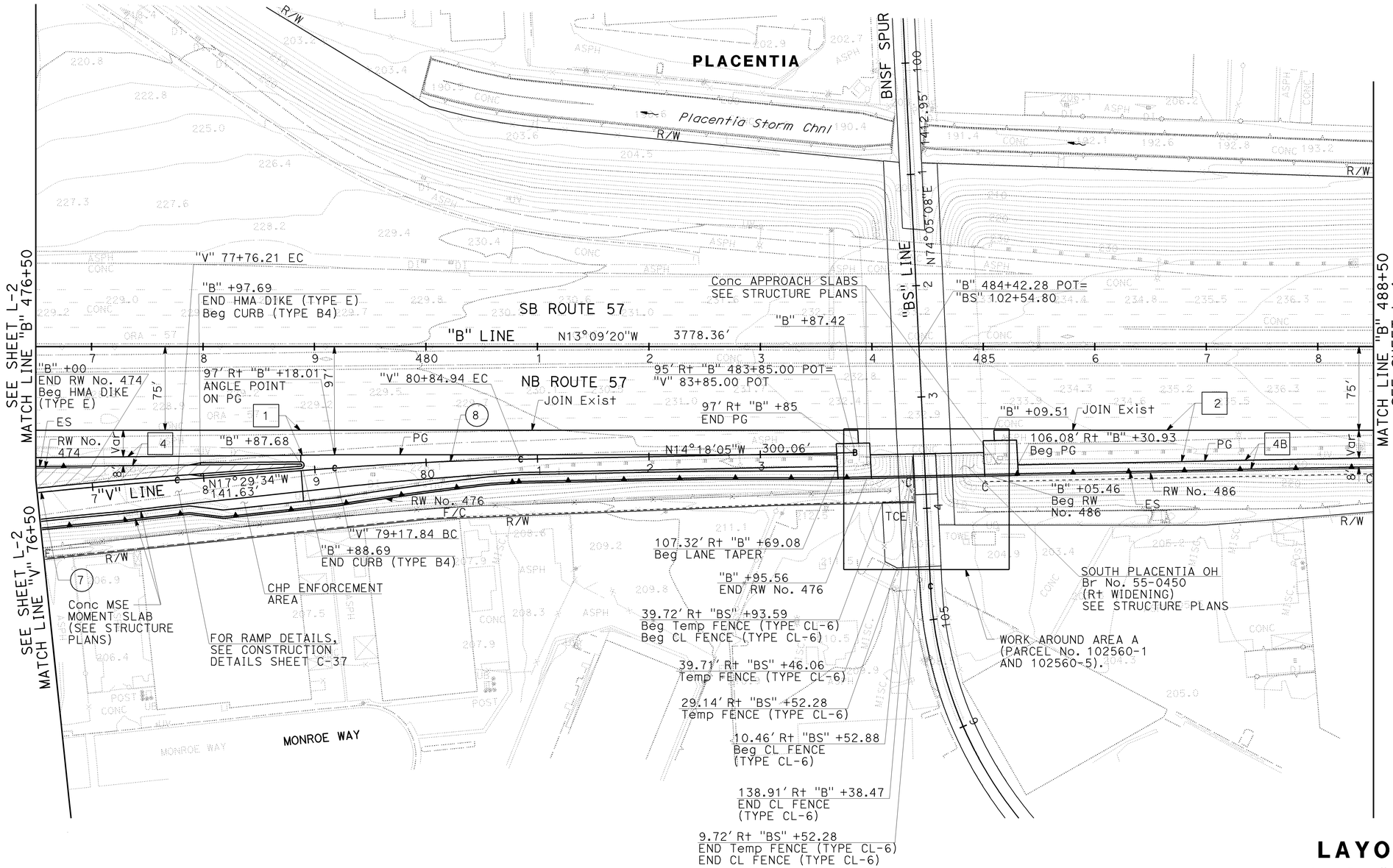

LAYOUT

SCALE: 1" = 50′

L-3

STATE OF CALIFORNIA - DEPARTMENT OF TRANSPORTATION
Caltrans

CONSULTANT FUNCTIONAL SUPERVISOR: GONZALO PEÑA
CALCULATED-DESIGNED BY: JOHN CURTIS
CHECKED BY: JOSUE VAGLIENTY
REVISED BY: JJV
DATE REVISED: 12/03/09
JJV 12/09/09

H:\pdata\10105878\Admin\submittals\2009-07-15 FINAL Electronic-Only Submittal\DGN-stmk IPLOT Files 2009-08-04 16-DEC-2009 08:24 c0F031ea003.dgn

LAST REVISION 08-01-08
DATE PLOTTED => 16-DEC-2009
TIME PLOTTED => 08:24

NOTE:
FOR ACCURATE RIGHT OF WAY AND ACCESS DATA,
CONTACT RIGHT OF WAY ENGINEERING AT THE DISTRICT OFFICE.

Dist	COUNTY	ROUTE	POST MILES TOTAL PROJECT	SHEET No.	TOTAL SHEETS
12	Ora	57	16.2/18.6	13	960

REGISTERED CIVIL ENGINEER — 12/9/09 DATE

JOSUE J. VAGLIENTY No. 70783 Exp. 6-30-11 CIVIL — REGISTERED PROFESSIONAL ENGINEER — STATE OF CALIFORNIA

12-14-09
PLANS APPROVAL DATE

THE STATE OF CALIFORNIA OR ITS OFFICERS OR AGENTS SHALL NOT BE RESPONSIBLE FOR THE ACCURACY OR COMPLETENESS OF SCANNED COPIES OF THIS PLAN SHEET.

RBF CONSULTING
14275 ALTON PKWY
IRVINE, CA 92618

OCTA
550 S. MAIN STREET
ORANGE, CA 92863

PLACENTIA

SEE SHEET L-3
MATCH LINE "B" 488+50

MATCH LINE "B" 501+50
SEE SHEET L-5

Placentia Storm Chnl

R/W

SB ROUTE 57

"B" LINE N13°09'20"W 3778.36'

NB ROUTE 57

"B" +69.79

"B" 490+60.22 POT=
"CA" 38+65.00 POT

"B" 495+54.79 POT=
"BM" 122+52.57 POT

Conc APPROACH SLABS
SEE STRUCTURE PLANS

JOIN Exist 490

"B" +57.86

97' Rt "B" +70.82
Beg PG

JOIN Exist

Conc APPROACH SLABS
SEE STRUCTURE PLANS
97' Rt "B" +42.61
END PG

"B" +44.44

"B" +57.14

97' Rt "B" +55.31
Beg PG

JOIN Exist

PG

ES

Var

RW No. 486

97.52' Rt
"B" +58.96
END PG

95' Rt "B" +85
END LANE TAPER
(ON ETW)

"B" +85.32
END RW
No. 486

106.5' Rt "B" +89.41
Beg CL FENCE
(TYPE CL-6)

123.45' Rt "B" +13.25
END CL FENCE
(TYPE CL-6)

10' CL GATE
(TYPE CL-6)

"B" +45.36
Beg RW No. 492

RW No. 492
"B" +64.17
END RW No. 492

106.5' Rt "B" +31.55
END CL FENCE
(TYPE CL-6)

134.42' Rt "B" +22.04
Beg CL FENCE
(TYPE CL-6)

10' CL GATE
(TYPE CL-6)

WORK AROUND AREA B
(PARCEL No. 102565-1
AND 102565-2).

"CA" LINE N74°04'31"E 2375.95'

CROWTHER Ave

CROWTHER Ave UC
Br No. 55-0457
(Rt WIDENING)
SEE STRUCTURE PLANS

"BM" LINE S81°34'36"W 1315.69'

BNSF MAINLINE

20' TCE

TCE

"B" +27.12
Beg RW
No. 496

RW No. 496

ES

Conc MSE MOMENT SLAB
(SEE STRUCTURE PLANS)

20' TCE

PRIVATE ALLEY

153.78' Rt "B" +66.09
END REMOVE AND
RECONSTRUCT BLOCK WALL
END CL FENCE (TYPE CL-6)

156.05' Rt "B" +74
Temp CL GATE (TYPE CL-6,
WITH PRIVACY SCREEN)
W=15'

20' CL GATE
(TYPE CL-6)

156.92' Rt "B" +44
Temp CL GATE (TYPE CL-6,
WITH PRIVACY SCREEN), W=15'
Beg REMOVE AND RECONSTRUCT
BLOCK WALL
Beg CL FENCE (TYPE CL-6)

CAMARILLO St

29.90' Rt "BM" +68.01
END CL FENCE
(TYPE CL-6)

PLACENTIA OH
Br No. 55-0449
(Rt WIDENING)
SEE STRUCTURE PLANS

30.03' Rt "BM" +96.29
Beg CL FENCE
(TYPE CL-6)

LAYOUT

SCALE: 1" = 50'

L-4

JOHN CURTIS	JUV	JUV	CALCULATED-DESIGNED BY
JOSUE VAGLIENTY	GONZALO PEÑA	12/03/09	12/09/09	CHECKED BY

CONSULTANT FUNCTIONAL SUPERVISOR

REVISED BY

DATE REVISED

STATE OF CALIFORNIA - DEPARTMENT OF TRANSPORTATION

Caltrans

H:\pdata\10105878\Admin\submittals\2009-07-15 FINAL Electronic-Only Submittal\DGN\strk1PLOT File16-2009-2009 10:12:24 c0f031eq004.dgn

BORDER LAST REVISED 4/11/2008

RELATIVE BORDER SCALE IS IN INCHES 0 1 2 3

USERNAME => trstrk
DGN FILE => c0f031eq004.dgn

CU 12220

EA 0F0311

LAST REVISION
DATE PLOTTED => 16-DEC-2009
TIME PLOTTED => 08:24
08-01-08

NOTES:

1. FOR ACCURATE RIGHT OF WAY AND ACCESS DATA, CONTACT RIGHT OF WAY ENGINEERING AT THE DISTRICT OFFICE.
2. FOR PLACENTIA Ave DETAILS, SEE CONSTRUCTION DETAILS SHEETS.

CURVE DATA				
No.	R	Δ	T	L
(3)	3500.00′	15°37′04"	479.99′	954.04′
(9)	3417.00′	4°34′54"	136.70′	273.24′
(10)	2000.00′	10°18′46"	180.48′	359.99′
(24)	3415.00′	10°54′47"	326.21′	650.46′

Dist	COUNTY	ROUTE	POST MILES TOTAL PROJECT	SHEET No.	TOTAL SHEETS
12	Ora	57	16.2/18.6	14	960

REGISTERED CIVIL ENGINEER — 12/9/09 DATE

JOSUE J. VAGLIENTY No. 70783 Exp. 6-30-11 CIVIL — REGISTERED PROFESSIONAL ENGINEER — STATE OF CALIFORNIA

12-14-09
PLANS APPROVAL DATE

THE STATE OF CALIFORNIA OR ITS OFFICERS OR AGENTS SHALL NOT BE RESPONSIBLE FOR THE ACCURACY OR COMPLETENESS OF SCANNED COPIES OF THIS PLAN SHEET.

RBF CONSULTING
14275 ALTON PKWY
IRVINE, CA 92618

OCTA
550 S. MAIN STREET
ORANGE, CA 92863

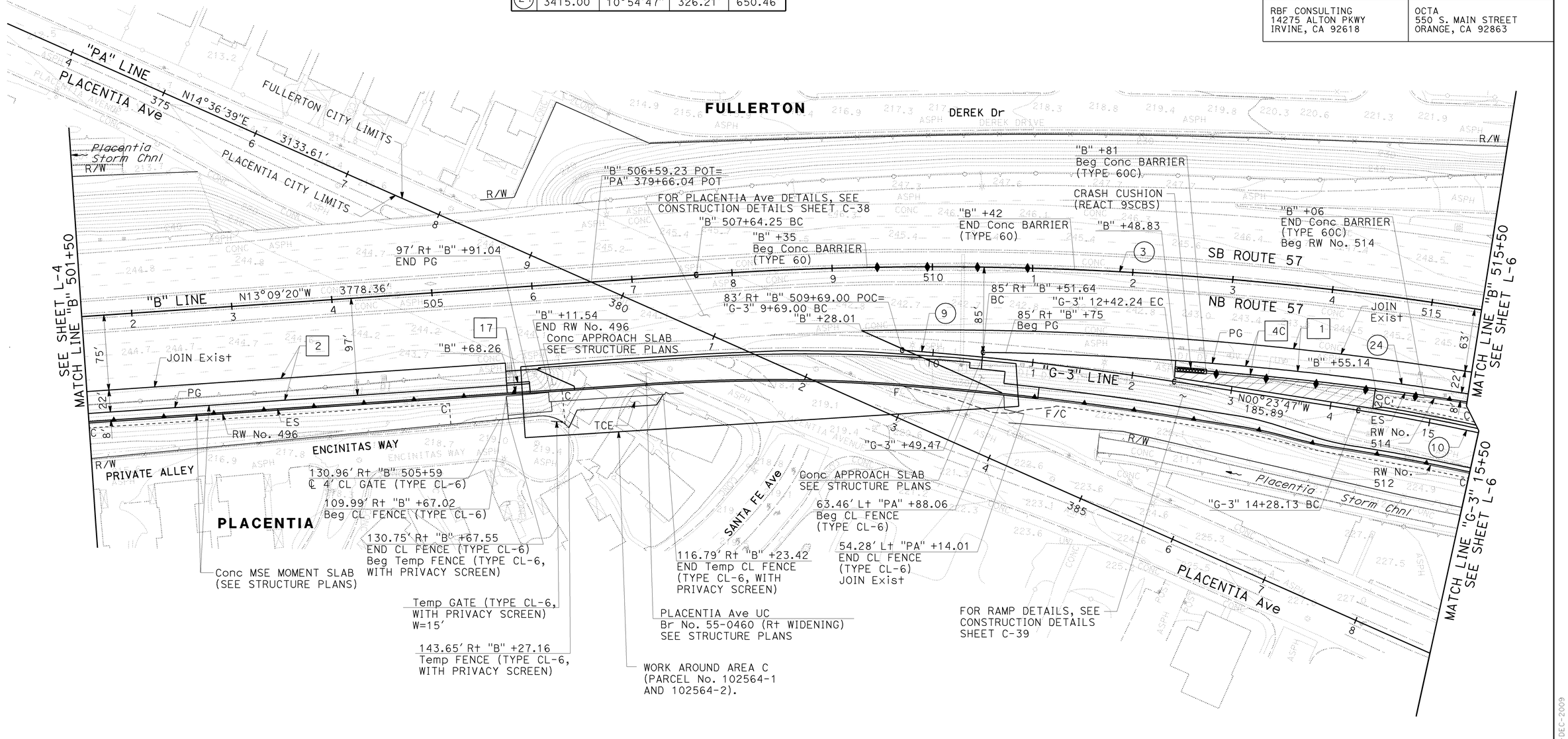

LAYOUT

SCALE: 1" = 50′

L-5

REVISED BY	JJV	JJV	
DATE REVISED	12/09/09	12/03/09	
CALCULATED-DESIGNED BY	CHECKED BY	CONSULTANT FUNCTIONAL SUPERVISOR	
JOHN CURTIS	JOSUE VAGLIENTY	GONZALO PEÑA	

STATE OF CALIFORNIA - DEPARTMENT OF TRANSPORTATION

Caltrans

H:\pdata\10105878\Admin\submittals\2009-07-15 FINAL Electronic-Only Submittal\DGN\c0f031ea005.dgn
PLOTTED: 12/16/2009 8:24:31 AM By trstrk
FILE: c0f031ea005.dgn

LAST REVISION: DATE PLOTTED => 16-DEC-2009
08-01-08 TIME PLOTTED => 08:24

BORDER LAST REVISED 4/11/2008

RELATIVE BORDER SCALE IS IN INCHES 0 1 2 3

USERNAME => trstrk
DGN FILE => c0f031ea005.dgn

CU 12220

EA 0F0311

NOTES:

1. FOR ACCURATE RIGHT OF WAY AND ACCESS DATA, CONTACT RIGHT OF WAY ENGINEERING AT THE DISTRICT OFFICE.
2. FOR "G-3" LINE INTERSECTION DETAILS NOT SHOWN, SEE CONSTRUCTION DETAILS SHEETS.

CURVE DATA

No.	R	Δ	T	L
(3)	3500.00′	15°37′04"	479.99′	954.04′
(4)	15000.00′	2°33′39"	335.26′	670.40′
(10)	2000.00′	10°18′46"	180.48′	359.99′
(11)	4500.00′	2°39′44"	104.56′	209.09′
(24)	3415.00′	10°54′47"	326.21′	650.46′
(25)	1000.00′	14°07′17"	123.86′	246.47′
(26)	4750.00′	7°33′38"	313.85′	626.79′
(27)	15085.00′	2°33′39"	337.16′	674.20′

Dist	COUNTY	ROUTE	POST MILES TOTAL PROJECT	SHEET No.	TOTAL SHEETS
12	Ora	57	16.2/18.6	15	960

REGISTERED CIVIL ENGINEER — DATE 7/15/09

JOSUE J. VAGLIENTY No. 70783 Exp. 6-30-11 CIVIL — REGISTERED PROFESSIONAL ENGINEER — STATE OF CALIFORNIA

12-14-09
PLANS APPROVAL DATE

THE STATE OF CALIFORNIA OR ITS OFFICERS OR AGENTS SHALL NOT BE RESPONSIBLE FOR THE ACCURACY OR COMPLETENESS OF SCANNED COPIES OF THIS PLAN SHEET.

RBF CONSULTING
14275 ALTON PKWY
IRVINE, CA 92618

OCTA
550 S. MAIN STREET
ORANGE, CA 92863

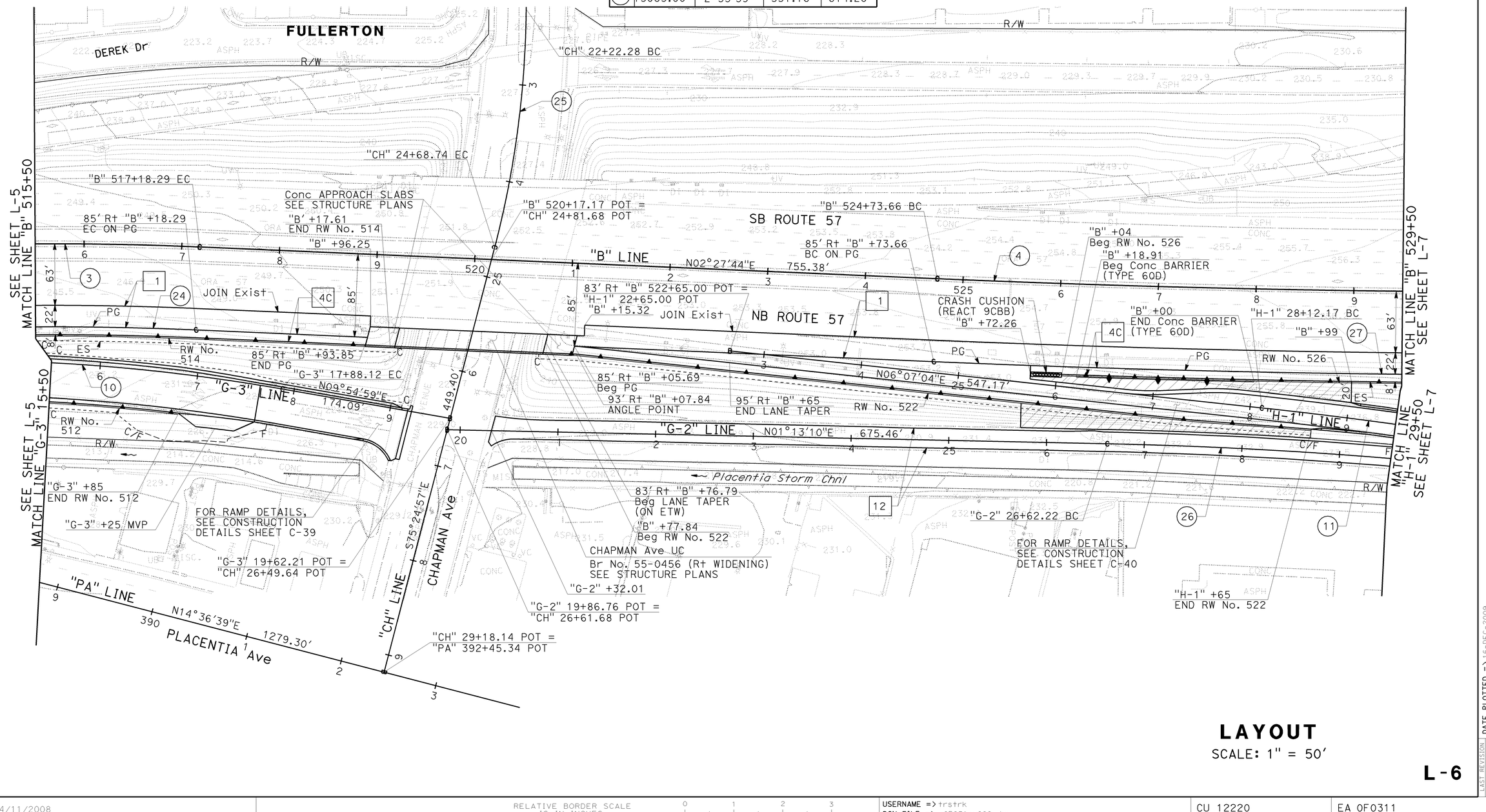

LAYOUT
SCALE: 1" = 50′

L-6

H:\pdata\10105878\CADD\TransPW\D\v\Layout\MERGED 6-24-09\c0F031ea006.dgn 16-DEC-2009 08:24 trstrk

STATE OF CALIFORNIA - DEPARTMENT OF TRANSPORTATION	CALCULATED-DESIGNED BY	CHECKED BY	REVISED BY	DATE REVISED
Caltrans	JOHN CURTIS	JOSUE VAGLIENTY		

CONSULTANT FUNCTIONAL SUPERVISOR: GONZALO PEÑA

BORDER LAST REVISED 4/11/2008 — RELATIVE BORDER SCALE IS IN INCHES 0 1 2 3

USERNAME => trstrk
DGN FILE => c0F031ea006.dgn

CU 12220 — EA 0F0311

LAST REVISION DATE PLOTTED => 16-DEC-2009
TIME PLOTTED => 08:24
08-01-08

NOTES:

1. FOR ACCURATE RIGHT OF WAY AND ACCESS DATA, CONTACT RIGHT OF WAY ENGINEERING AT THE DISTRICT OFFICE.
2. FOR "G-2" LINE, "H-1" LINE AND "H-8" LINE INTERSECTION DETAILS NOT SHOWN, SEE CONSTRUCTION DETAILS SHEETS.

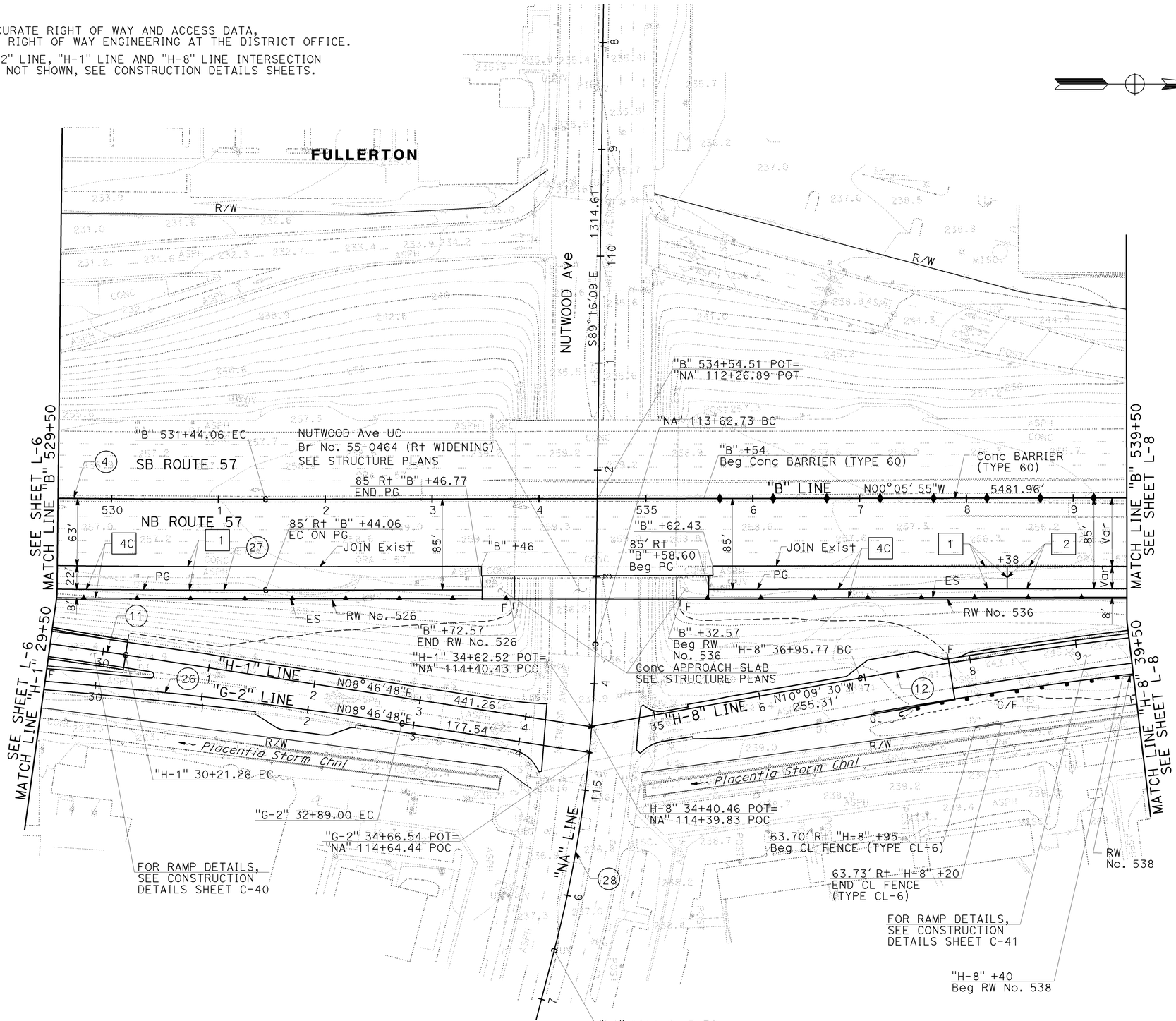

Dist	COUNTY	ROUTE	POST MILES TOTAL PROJECT	SHEET No.	TOTAL SHEETS
12	Ora	57	16.2/18.6	16	960

REGISTERED CIVIL ENGINEER — 7/15/09 DATE

JOSUE J. VAGLIENTY No. 70783 Exp. 6-30-11 CIVIL — REGISTERED PROFESSIONAL ENGINEER — STATE OF CALIFORNIA

12-14-09
PLANS APPROVAL DATE

THE STATE OF CALIFORNIA OR ITS OFFICERS OR AGENTS SHALL NOT BE RESPONSIBLE FOR THE ACCURACY OR COMPLETENESS OF SCANNED COPIES OF THIS PLAN SHEET.

RBF CONSULTING
14275 ALTON PKWY
IRVINE, CA 92618

OCTA
550 S. MAIN STREET
ORANGE, CA 92863

CURVE DATA				
No.	R	Δ	T	L
4	15000.00'	2°33'39"	335.26'	670.40'
11	4500.00'	2°39'44"	104.56'	209.09'
12	4500.00'	5°43'21"	224.91'	449.45'
26	4750.00'	7°33'38"	313.85'	626.79'
27	15085.00'	2°33'39"	337.16'	674.20'
28	1200.00'	13°51'11"	145.78'	290.14'

LAYOUT
SCALE: 1" = 50'

L-7

REVISED BY | DATE REVISED
JOHN CURTIS | JOSUE VAGLIENTY
CALCULATED-DESIGNED BY | CHECKED BY
CONSULTANT FUNCTIONAL SUPERVISOR: GONZALO PEÑA
STATE OF CALIFORNIA - DEPARTMENT OF TRANSPORTATION
Caltrans

LAST REVISION: DATE PLOTTED => 16-DEC-2009 | TIME PLOTTED => 08:24
08-01-08

H:\pdata\10105878\CADD\TransPW\Div\Layout\MERGED 6-24-09\c0F031ea007.dgn
16-DEC-2009 08:24
trstrk

BORDER LAST REVISED 4/11/2008
RELATIVE BORDER SCALE IS IN INCHES 0 1 2 3
USERNAME => trstrk
DGN FILE => c0F031ea007.dgn
CU 12220
EA 0F0311

Dist	COUNTY	ROUTE	POST MILES TOTAL PROJECT	SHEET No.	TOTAL SHEETS
12	Ora	57	16.2/18.6	17	960

REGISTERED CIVIL ENGINEER — 7/15/09 DATE

JOSUE J. VAGLIENTY No. 70783 Exp. 6-30-11 CIVIL — REGISTERED PROFESSIONAL ENGINEER — STATE OF CALIFORNIA

12-14-09
PLANS APPROVAL DATE

THE STATE OF CALIFORNIA OR ITS OFFICERS OR AGENTS SHALL NOT BE RESPONSIBLE FOR THE ACCURACY OR COMPLETENESS OF SCANNED COPIES OF THIS PLAN SHEET.

RBF CONSULTING
14275 ALTON PKWY
IRVINE, CA 92618

OCTA
550 S. MAIN STREET
ORANGE, CA 92863

NOTE:

1. FOR ACCURATE RIGHT OF WAY AND ACCESS DATA, CONTACT RIGHT OF WAY ENGINEERING AT THE DISTRICT OFFICE.

CURVE DATA				
No.	R	Δ	T	L
(12)	4500.00′	5°43′21"	224.91′	449.45′
(13)	3000.00′	3°11′29"	83.57′	167.10′

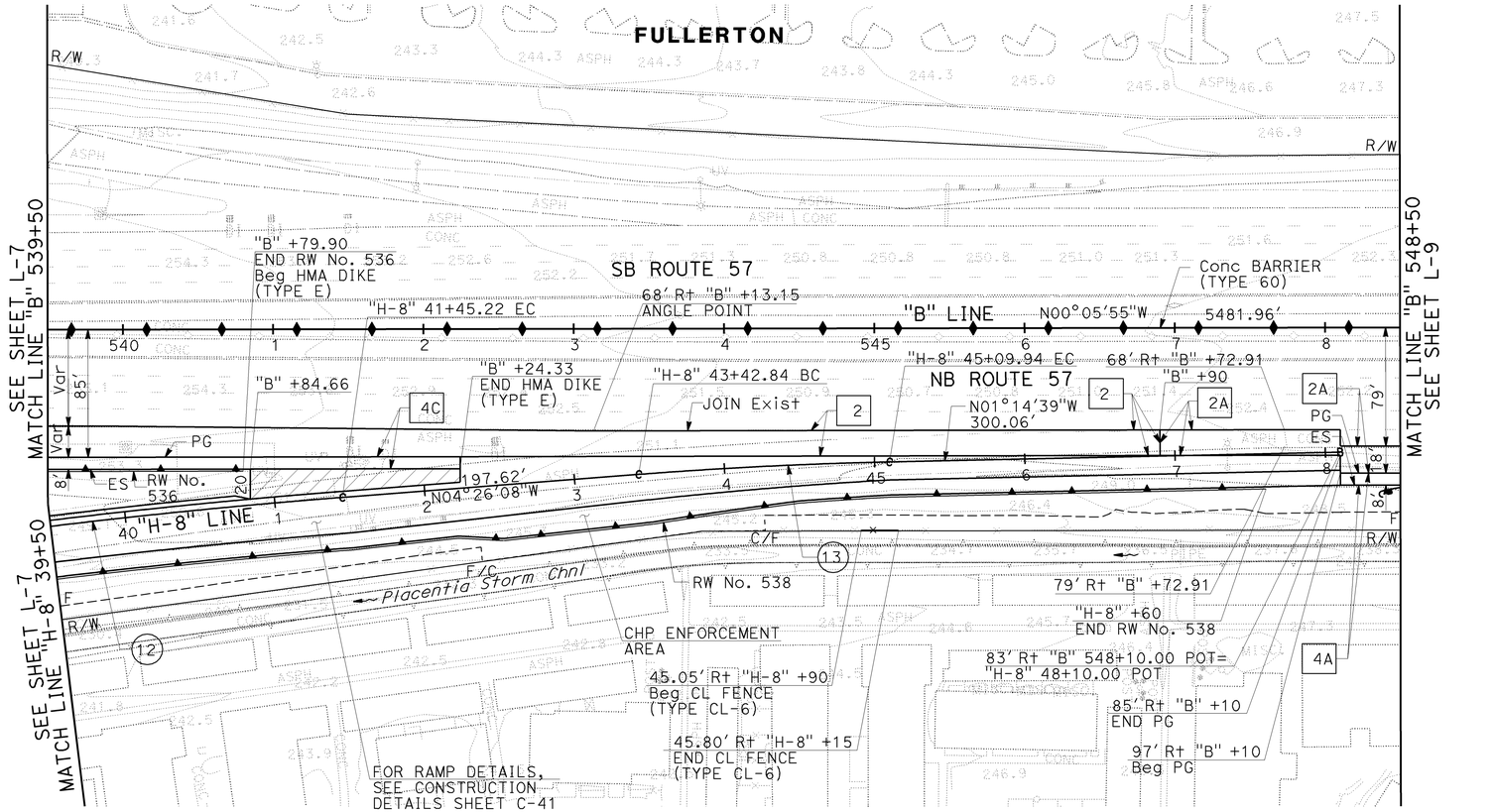

LAYOUT

SCALE: 1" = 50′

L-8

H:\pdata\10105878\CADD\TransPW\Div\Layout\MERGED 6-24-09\c0F031ea008.dgn trstrk 16-DEC-2009 08:24

REVISED BY	DATE REVISED

CALCULATED-DESIGNED BY: JOHN CURTIS
CHECKED BY: JOSUE VAGLIENTY
CONSULTANT FUNCTIONAL SUPERVISOR: GONZALO PEÑA
STATE OF CALIFORNIA - DEPARTMENT OF TRANSPORTATION

LAST REVISION | DATE PLOTTED => 16-DEC-2009
TIME PLOTTED => 08:24
08-01-08

BORDER LAST REVISED 4/11/2008 | RELATIVE BORDER SCALE IS IN INCHES 0 1 2 3 | USERNAME => trstrk | DGN FILE => c0F031ea008.dgn | CU 12220 | EA 0F0311

Dist	COUNTY	ROUTE	POST MILES TOTAL PROJECT	SHEET No.	TOTAL SHEETS
12	Ora	57	16.2/18.6	18	960

REGISTERED CIVIL ENGINEER — DATE 7/15/09

JOSUE J. VAGLIENTY No. 70783 Exp. 6-30-11 CIVIL — REGISTERED PROFESSIONAL ENGINEER — STATE OF CALIFORNIA

12-14-09
PLANS APPROVAL DATE

THE STATE OF CALIFORNIA OR ITS OFFICERS OR AGENTS SHALL NOT BE RESPONSIBLE FOR THE ACCURACY OR COMPLETENESS OF SCANNED COPIES OF THIS PLAN SHEET.

RBF CONSULTING
14275 ALTON PKWY
IRVINE, CA 92618

OCTA
550 S. MAIN STREET
ORANGE, CA 92863

NOTE:

1. FOR ACCURATE RIGHT OF WAY AND ACCESS DATA, CONTACT RIGHT OF WAY ENGINEERING AT THE DISTRICT OFFICE.

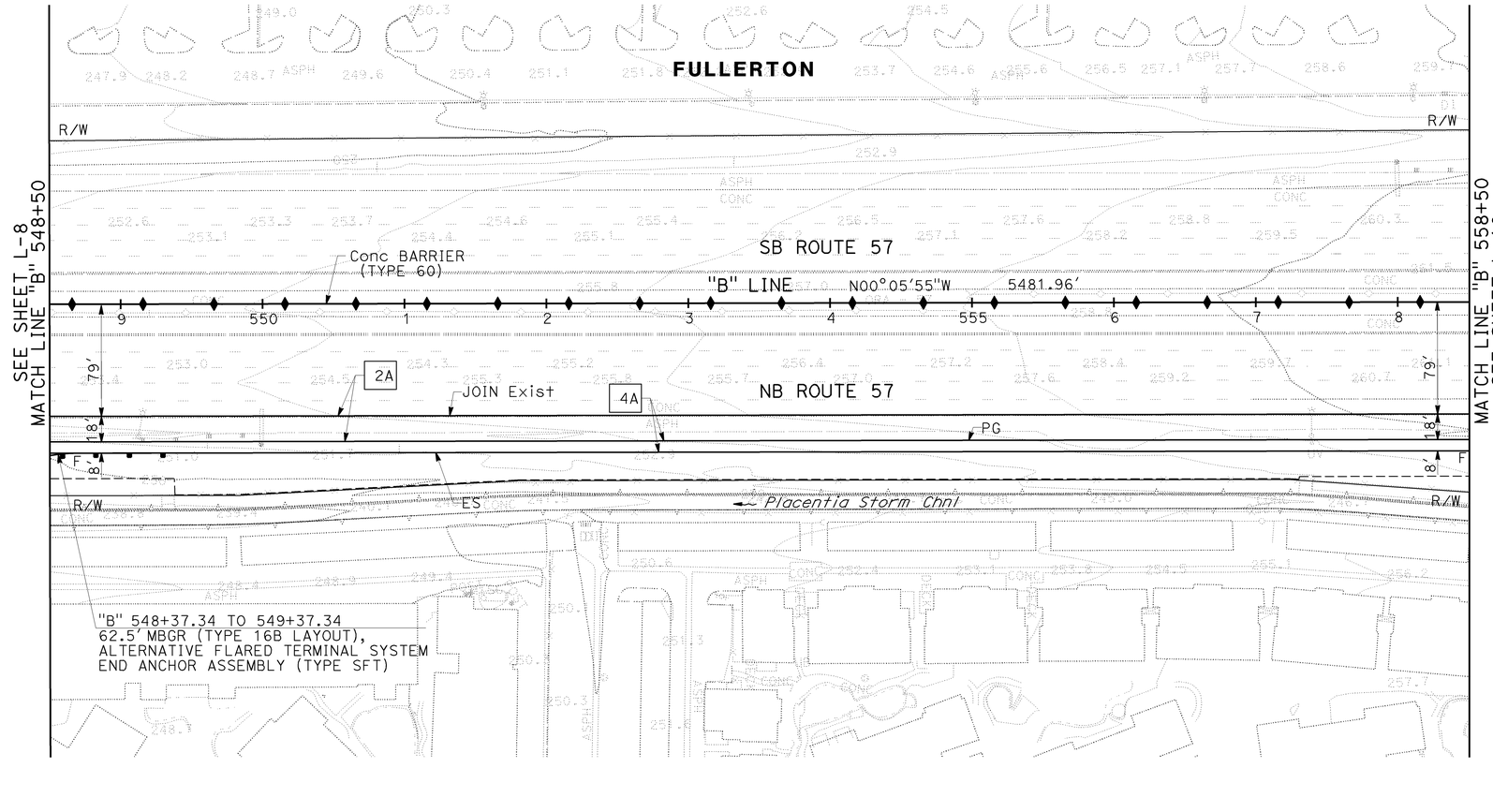

LAYOUT
SCALE: 1" = 50'

L-9

H:\pdata\10105878\CADD\TransPW\Div\Layout\MERGED 6-24-09\c0F031ea009.dgn
16-DEC-2009 08:24
trstrk

REVISED BY	DATE REVISED

CALCULATED-DESIGNED BY: JOHN CURTIS
CHECKED BY: JOSUE VAGLIENTY
CONSULTANT FUNCTIONAL SUPERVISOR: GONZALO PEÑA
STATE OF CALIFORNIA - DEPARTMENT OF TRANSPORTATION
Caltrans

LAST REVISION 08-01-08
DATE PLOTTED => 16-DEC-2009
TIME PLOTTED => 08:24

BORDER LAST REVISED 4/11/2008 | RELATIVE BORDER SCALE IS IN INCHES 0 1 2 3 | USERNAME => trstrk | DGN FILE => c0F031ea009.dgn | CU 12220 | EA 0F0311

NOTES:

1. FOR ACCURATE RIGHT OF WAY AND ACCESS DATA, CONTACT RIGHT OF WAY ENGINEERING AT THE DISTRICT OFFICE.

CURVE DATA				
No.	R	Δ	T	L
(14)	1062.00′	23°42′52″	222.97′	439.56′

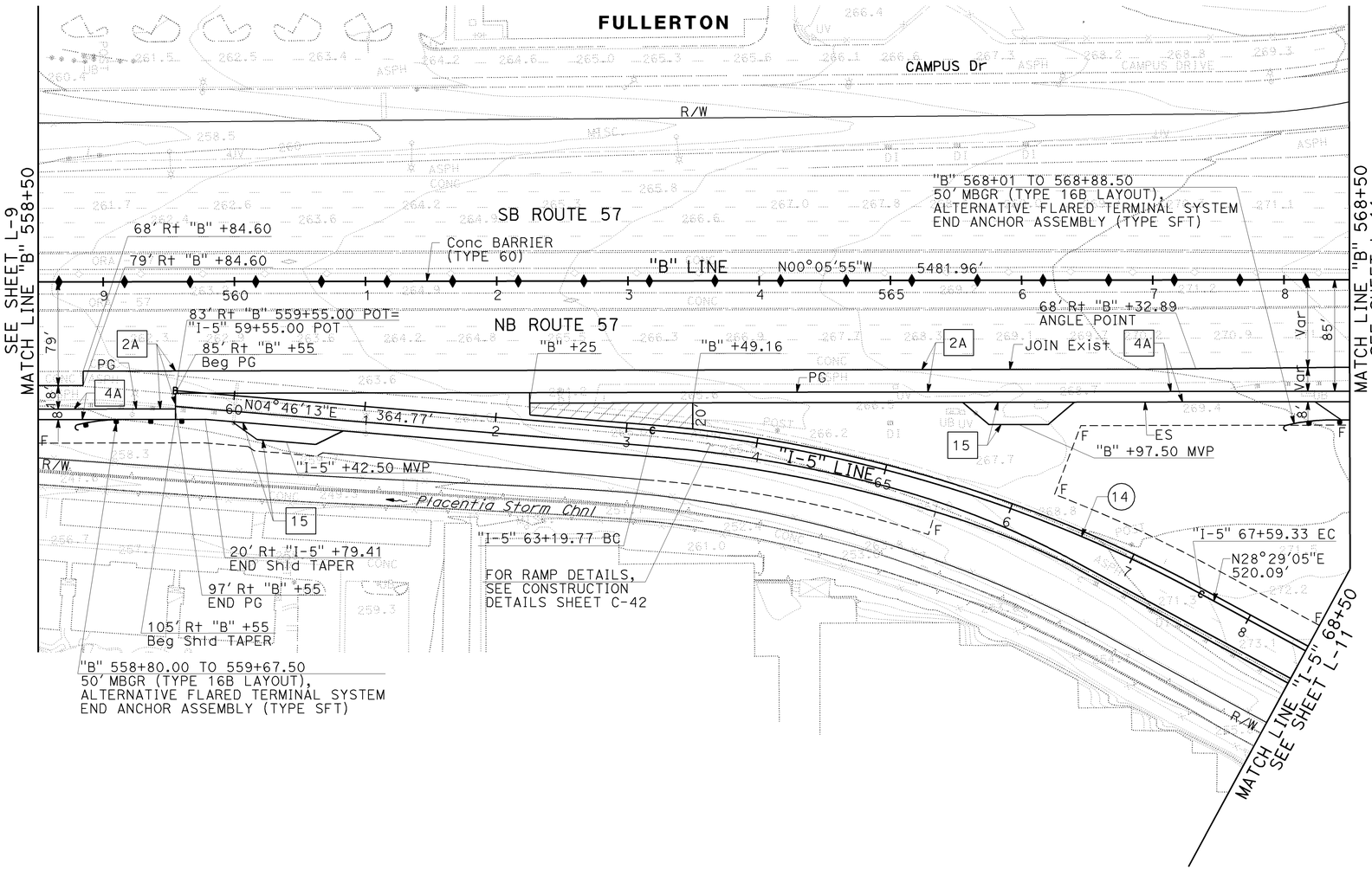

LAYOUT

SCALE: 1" = 50′

L-10

Dist	COUNTY	ROUTE	POST MILES TOTAL PROJECT	SHEET No.	TOTAL SHEETS
12	Ora	57	16.2/18.6	19	960

REGISTERED CIVIL ENGINEER — 7/15/09 DATE

JOSUE J. VAGLIENTY No. 70783 Exp. 6-30-11 CIVIL — REGISTERED PROFESSIONAL ENGINEER — STATE OF CALIFORNIA

12-14-09
PLANS APPROVAL DATE

THE STATE OF CALIFORNIA OR ITS OFFICERS OR AGENTS SHALL NOT BE RESPONSIBLE FOR THE ACCURACY OR COMPLETENESS OF SCANNED COPIES OF THIS PLAN SHEET.

RBF CONSULTING
14275 ALTON PKWY
IRVINE, CA 92618

OCTA
550 S. MAIN STREET
ORANGE, CA 92863

REVISED BY	DATE REVISED

CALCULATED-DESIGNED BY: JOHN CURTIS
CHECKED BY: JOSUE VAGLIENTY
CONSULTANT FUNCTIONAL SUPERVISOR: GONZALO PEÑA

STATE OF CALIFORNIA - DEPARTMENT OF TRANSPORTATION
Caltrans

H:\pdata\10105878\CADD\TransPW\D\v\Layout\MERGED 6-24-09\c0F031ea010.dgn trstrk 16-DEC-2009 08:24

LAST REVISION 08-01-08
DATE PLOTTED => 16-DEC-2009
TIME PLOTTED => 08:24

BORDER LAST REVISED 4/11/2008
RELATIVE BORDER SCALE IS IN INCHES 0 1 2 3
USERNAME => trstrk
DGN FILE => c0F031ea010.dgn
CU 12220
EA 0F0311

NOTES:

1. FOR ACCURATE RIGHT OF WAY AND ACCESS DATA, CONTACT RIGHT OF WAY ENGINEERING AT THE DISTRICT OFFICE.
2. FOR "I-5", "I-4", AND "I-3" LINE INTERSECTION DETAILS, SEE CONSTRUCTION DETAILS SHEETS.

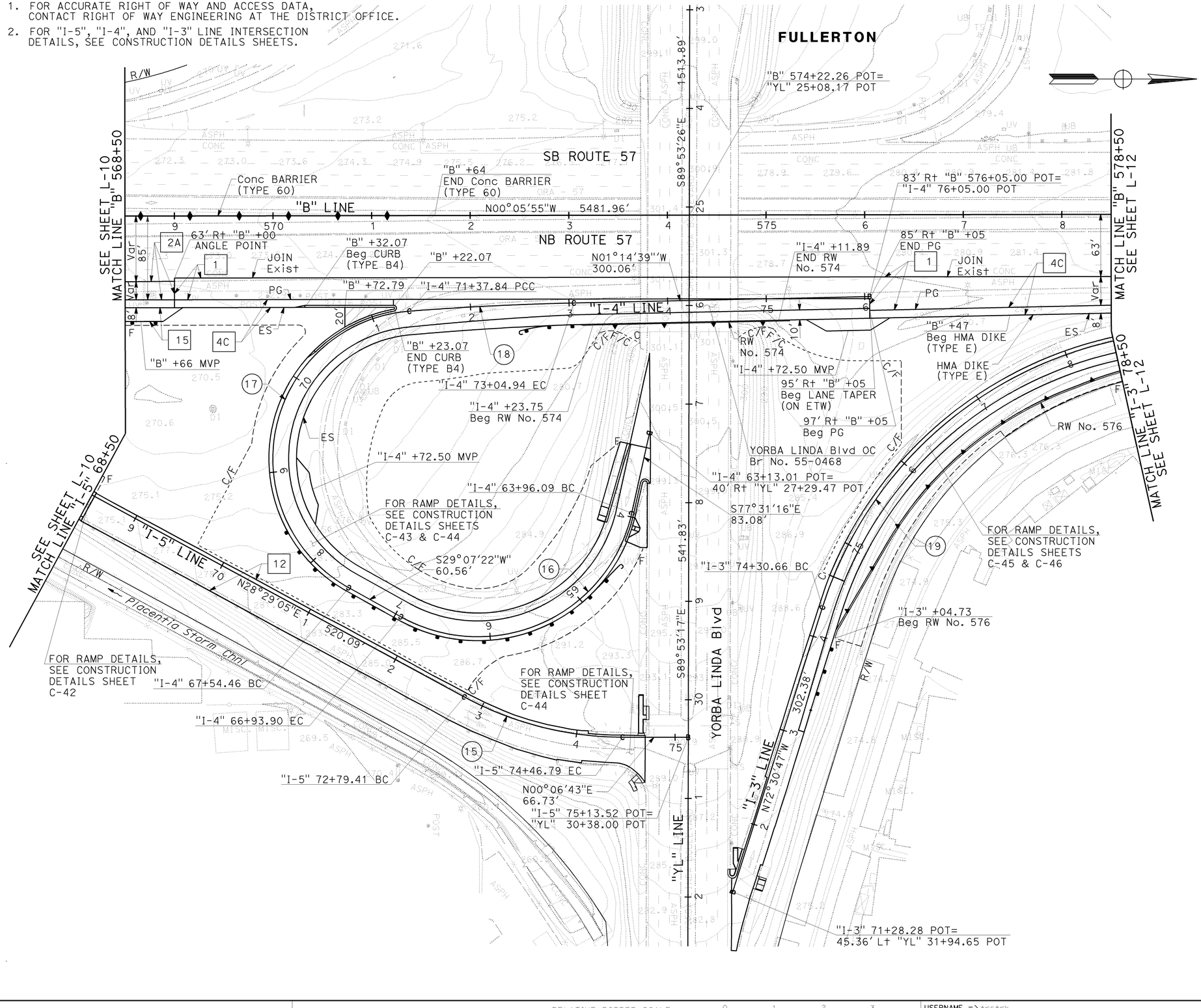

Dist	COUNTY	ROUTE	POST MILES TOTAL PROJECT	SHEET No.	TOTAL SHEETS
12	Ora	57	16.2/18.6	20	960

REGISTERED CIVIL ENGINEER — DATE 7/15/09

JOSUE J. VAGLIENTY No. 70783 Exp. 6-30-11 CIVIL — REGISTERED PROFESSIONAL ENGINEER — STATE OF CALIFORNIA

12-14-09
PLANS APPROVAL DATE

THE STATE OF CALIFORNIA OR ITS OFFICERS OR AGENTS SHALL NOT BE RESPONSIBLE FOR THE ACCURACY OR COMPLETENESS OF SCANNED COPIES OF THIS PLAN SHEET.

RBF CONSULTING
14275 ALTON PKWY
IRVINE, CA 92618

OCTA
550 S. MAIN STREET
ORANGE, CA 92863

CURVE DATA				
No.	R	Δ	T	L
15	338.00'	28°22'22"	85.44'	167.38'
16	160.00'	106°38'38"	214.83'	297.81'
17	150.00'	146°26'30"	497.48'	383.38'
18	3000.00'	3°11'29"	83.57'	167.10'
19	400.00'	68°59'18"	274.85'	481.63'

LAYOUT
SCALE: 1" = 50'

L-11

REVISED BY | DATE REVISED
JOHN CURTIS | CALCULATED-DESIGNED BY
JOSUE VAGLIENTY | CHECKED BY
GONZALO PEÑA | CONSULTANT FUNCTIONAL SUPERVISOR
STATE OF CALIFORNIA - DEPARTMENT OF TRANSPORTATION
Caltrans

LAST REVISION | DATE PLOTTED => 16-DEC-2009
08-01-08 | TIME PLOTTED => 08:24

H:\pdata\10105878\CADD\TransPW\Div\Layout\MERGED 6-24-09\c0F031ea011.dgn
16-DEC-2009 08:24
trstrk

BORDER LAST REVISED 4/11/2008
RELATIVE BORDER SCALE IS IN INCHES 0 1 2 3
USERNAME => trstrk
DGN FILE => c0F031ea011.dgn
CU 12220
EA 0F0311

NOTE:
FOR ACCURATE RIGHT OF WAY AND ACCESS DATA,
CONTACT RIGHT OF WAY ENGINEERING AT THE DISTRICT OFFICE.

CURVE DATA				
No.	R	Δ	T	L
5	15000.00′	2°58′42"	389.94′	779.71′
19	400.00′	68°59′18"	274.85′	481.63′
20	20000.00′	0°57′35"	167.53′	335.05′
21	3000.00′	3°11′29"	83.57′	167.10′
29	15085.00′	0°20′24"	44.74′	89.48′

Dist	COUNTY	ROUTE	POST MILES TOTAL PROJECT	SHEET No.	TOTAL SHEETS
12	Ora	57	16.2/18.6	21	960

REGISTERED CIVIL ENGINEER — DATE 7/15/09

JOSUE J. VAGLIENTY No. 70783 Exp. 6-30-11 CIVIL — REGISTERED PROFESSIONAL ENGINEER — STATE OF CALIFORNIA

12-14-09
PLANS APPROVAL DATE

THE STATE OF CALIFORNIA OR ITS OFFICERS OR AGENTS SHALL NOT BE RESPONSIBLE FOR THE ACCURACY OR COMPLETENESS OF SCANNED COPIES OF THIS PLAN SHEET.

RBF CONSULTING
14275 ALTON PKWY
IRVINE, CA 92618

OCTA
550 S. MAIN STREET
ORANGE, CA 92863

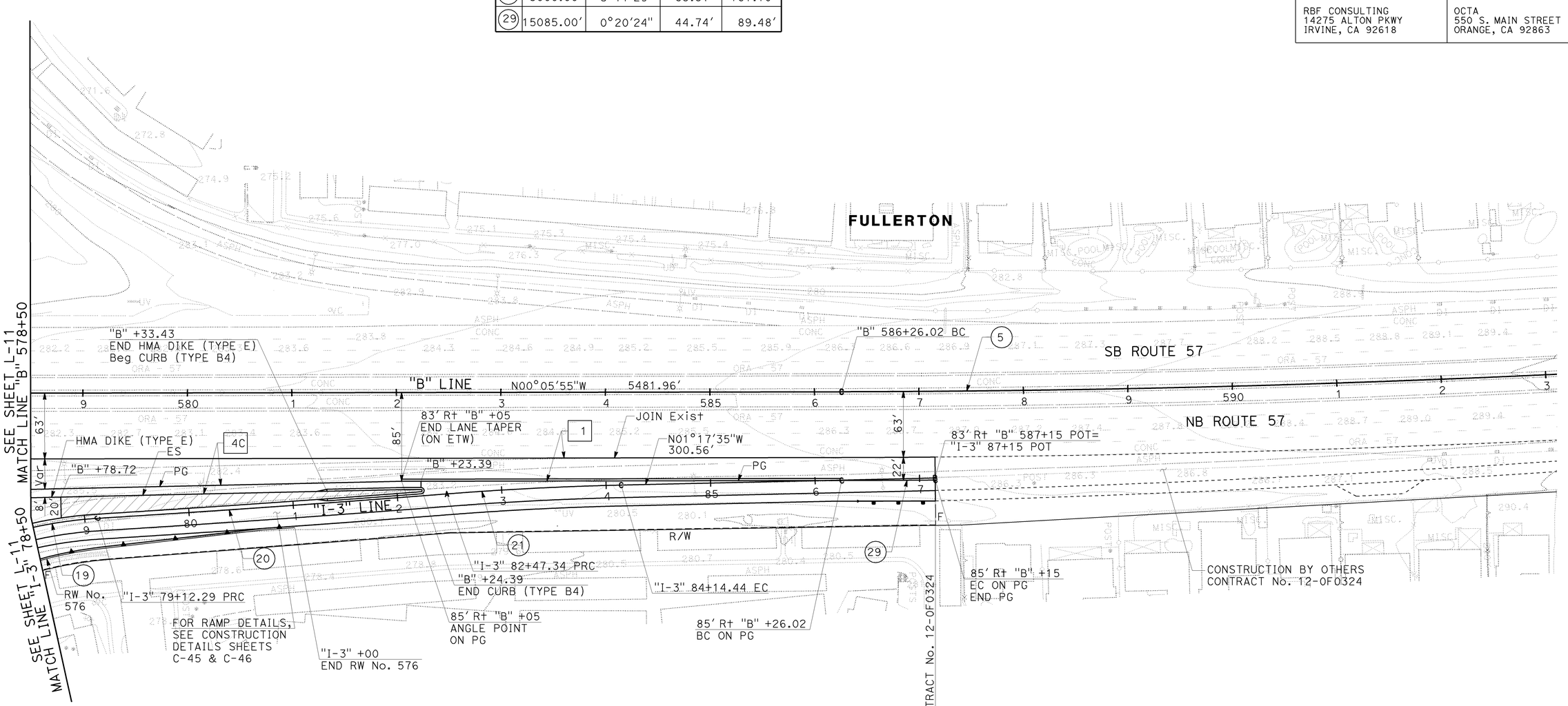

LAYOUT
SCALE: 1" = 50′

L-12

H:\pdata\10105878\CADD\TransPW\Div\Layout\MERGED 6-24-09\c0F031ea012.dgn trstrk 16-DEC-2009 08:40

REVISED BY	DATE REVISED

CALCULATED-DESIGNED BY: JOHN CURTIS
CHECKED BY: JOSUE VAGLIENTY
CONSULTANT FUNCTIONAL SUPERVISOR: GONZALO PEÑA
STATE OF CALIFORNIA - DEPARTMENT OF TRANSPORTATION
Caltrans

LAST REVISION: 08-01-08
DATE PLOTTED => 16-DEC-2009
TIME PLOTTED => 08:40

BORDER LAST REVISED 4/11/2008
RELATIVE BORDER SCALE IS IN INCHES 0 1 2 3
USERNAME => trstrk
DGN FILE => c0F031ea012.dgn
CU 12220
EA 0F0311

Dist	COUNTY	ROUTE	POST MILES TOTAL PROJECT	SHEET No.	TOTAL SHEETS
12	Ora	57	16.2/18.6	22	960

REGISTERED CIVIL ENGINEER — DATE 7/15/09

12-14-09
PLANS APPROVAL DATE

REGISTERED PROFESSIONAL ENGINEER
JOSUE J. VAGLIENTY
No. 70783
Exp. 6-30-11
CIVIL
STATE OF CALIFORNIA

THE STATE OF CALIFORNIA OR ITS OFFICERS OR AGENTS SHALL NOT BE RESPONSIBLE FOR THE ACCURACY OR COMPLETENESS OF SCANNED COPIES OF THIS PLAN SHEET.

RBF CONSULTING
14275 ALTON PKWY
IRVINE, CA 92618

OCTA
550 S. MAIN STREET
ORANGE, CA 92863

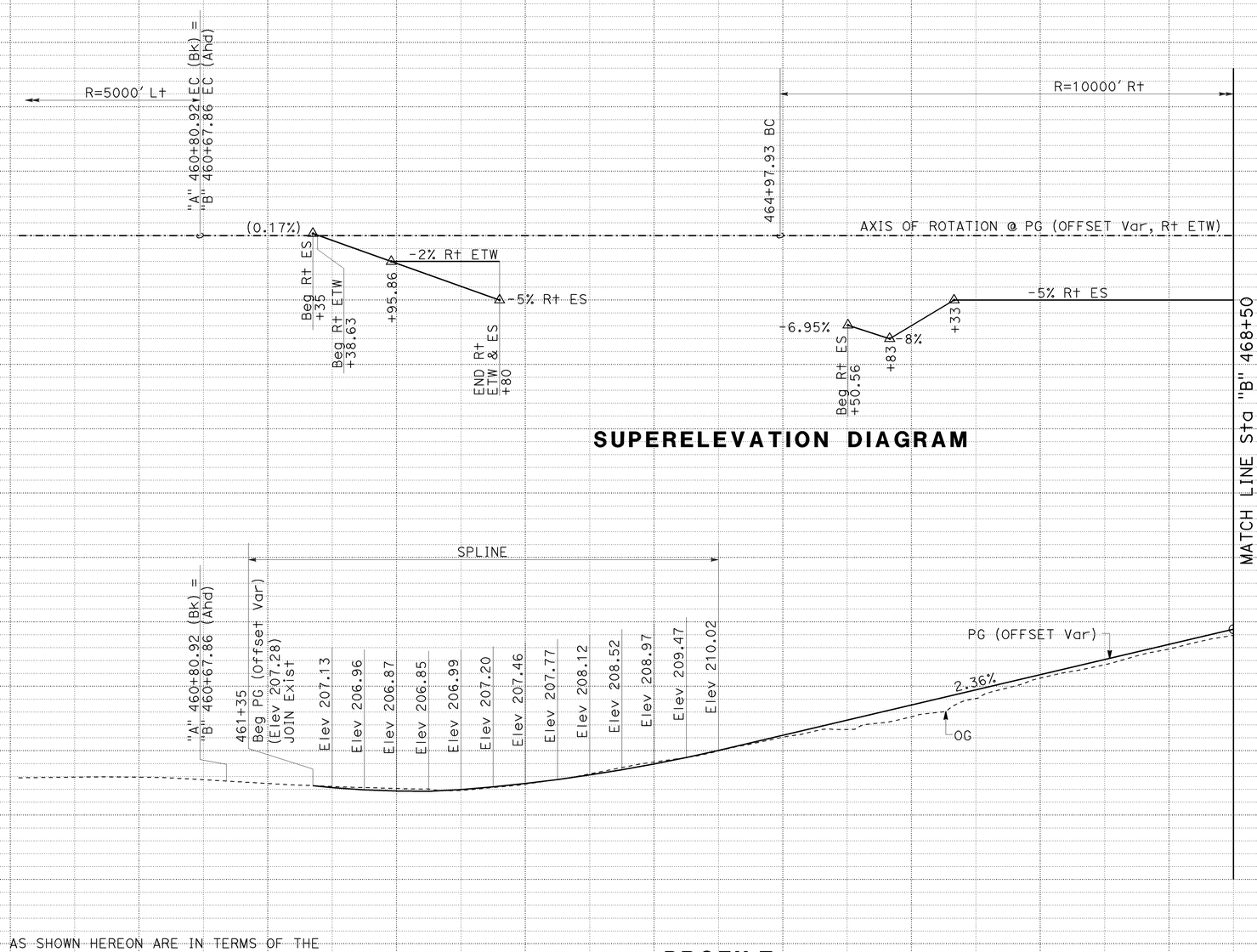

ELEVATIONS AS SHOWN HEREON ARE IN TERMS OF THE NORTH AMERICAN VERTICAL DATUM OF 1988 (NAVD88) BASED LOCALLY UPON THE FOLLOWING COUNTY OF ORANGE BENCHMARKS:

- 3004, OCS BM 1L-54-82, 153.17, 1991
- 3015, OCS BM 2G-25-70, 275.87, 2006

PROFILE

"B" LINE PG
NB ROUTE 57

PROFILE AND SUPERELEVATION DIAGRAM

SCALE: Horiz 1" = 50'
Vert 1" = 5'

PS-1

REVISED BY	DATE REVISED

CALCULATED-DESIGNED BY: SUSAN POMERLEAU
CHECKED BY: JOSUE VAGLIENTY
SUPERVISOR: GONZALO PEÑA
CONSULTANT FUNCTIONAL SUPERVISOR

STATE OF CALIFORNIA - DEPARTMENT OF TRANSPORTATION
Caltrans

H:\pdata\10105878\Admin\submittals\2009-07-15 FINAL Electronic-Only Submittal\DGN\rangluyeLOT Files\c0F031fb001.dgn
15-DEC-2009 13:56:57 PM

BORDER LAST REVISED 4/11/2008

RELATIVE BORDER SCALE IS IN INCHES 0 1 2 3

USERNAME => trmnguye
DGN FILE => c0F031fb001.dgn

CU 12220

EA 0F0311

LAST REVISION
DATE PLOTTED => 15-DEC-2009
TIME PLOTTED => 13:56
08-01-08

Dist	COUNTY	ROUTE	POST MILES TOTAL PROJECT	SHEET No.	TOTAL SHEETS
12	Ora	57	16.2/18.6	23	960

REGISTERED CIVIL ENGINEER 7/15/09 DATE

12-14-09
PLANS APPROVAL DATE

REGISTERED PROFESSIONAL ENGINEER JOSUE J. VAGLIENTY No. 70783 Exp. 6-30-11 CIVIL STATE OF CALIFORNIA

THE STATE OF CALIFORNIA OR ITS OFFICERS OR AGENTS SHALL NOT BE RESPONSIBLE FOR THE ACCURACY OR COMPLETENESS OF SCANNED COPIES OF THIS PLAN SHEET.

RBF CONSULTING
14275 ALTON PKWY
IRVINE, CA 92618

OCTA
550 S. MAIN STREET
ORANGE, CA 92863

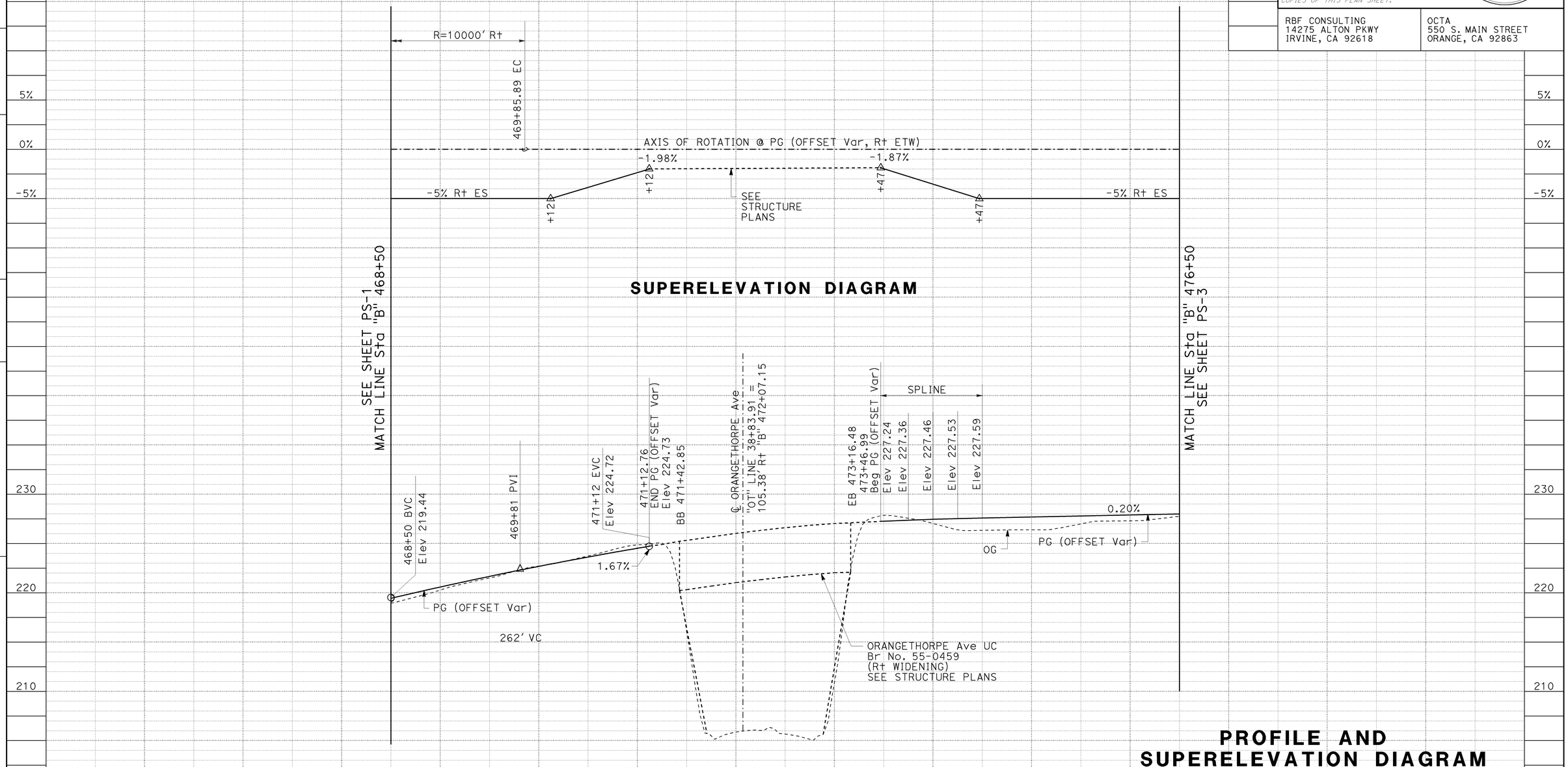

PROFILE AND SUPERELEVATION DIAGRAM

SCALE: Horiz 1" = 50'
Vert 1" = 5'

PS-2

STATION	9	470	1	2	3	4	475	6	TOTAL
CY Exc									
CY Emb									

STATE OF CALIFORNIA - DEPARTMENT OF TRANSPORTATION
Caltrans
CONSULTANT FUNCTIONAL SUPERVISOR: GONZALO PEÑA
CALCULATED-DESIGNED BY: SUSAN POMERLEAU
CHECKED BY: JOSUE VAGLIENTY
REVISED BY
DATE REVISED

H:\pdata\10105878\Admin\submittals\2009-07-15 FINAL Electronic-Only Submittal\DGN rmnguye PLOT Files 2009-07-15 FINAL SUBMITTAL\c0F031fb002.dgn

LAST REVISION 08-01-08
DATE PLOTTED => 15-DEC-2009
TIME PLOTTED => 13:56

Dist	COUNTY	ROUTE	POST MILES TOTAL PROJECT	SHEET No.	TOTAL SHEETS
12	Ora	57	16.2/18.6	24	960

REGISTERED CIVIL ENGINEER 7/15/09 DATE

12-14-09
PLANS APPROVAL DATE

REGISTERED PROFESSIONAL ENGINEER JOSUE J. VAGLIENTY No. 70783 Exp. 6-30-11 CIVIL STATE OF CALIFORNIA

THE STATE OF CALIFORNIA OR ITS OFFICERS OR AGENTS SHALL NOT BE RESPONSIBLE FOR THE ACCURACY OR COMPLETENESS OF SCANNED COPIES OF THIS PLAN SHEET.

RBF CONSULTING
14275 ALTON PKWY
IRVINE, CA 92618

OCTA
550 S. MAIN STREET
ORANGE, CA 92863

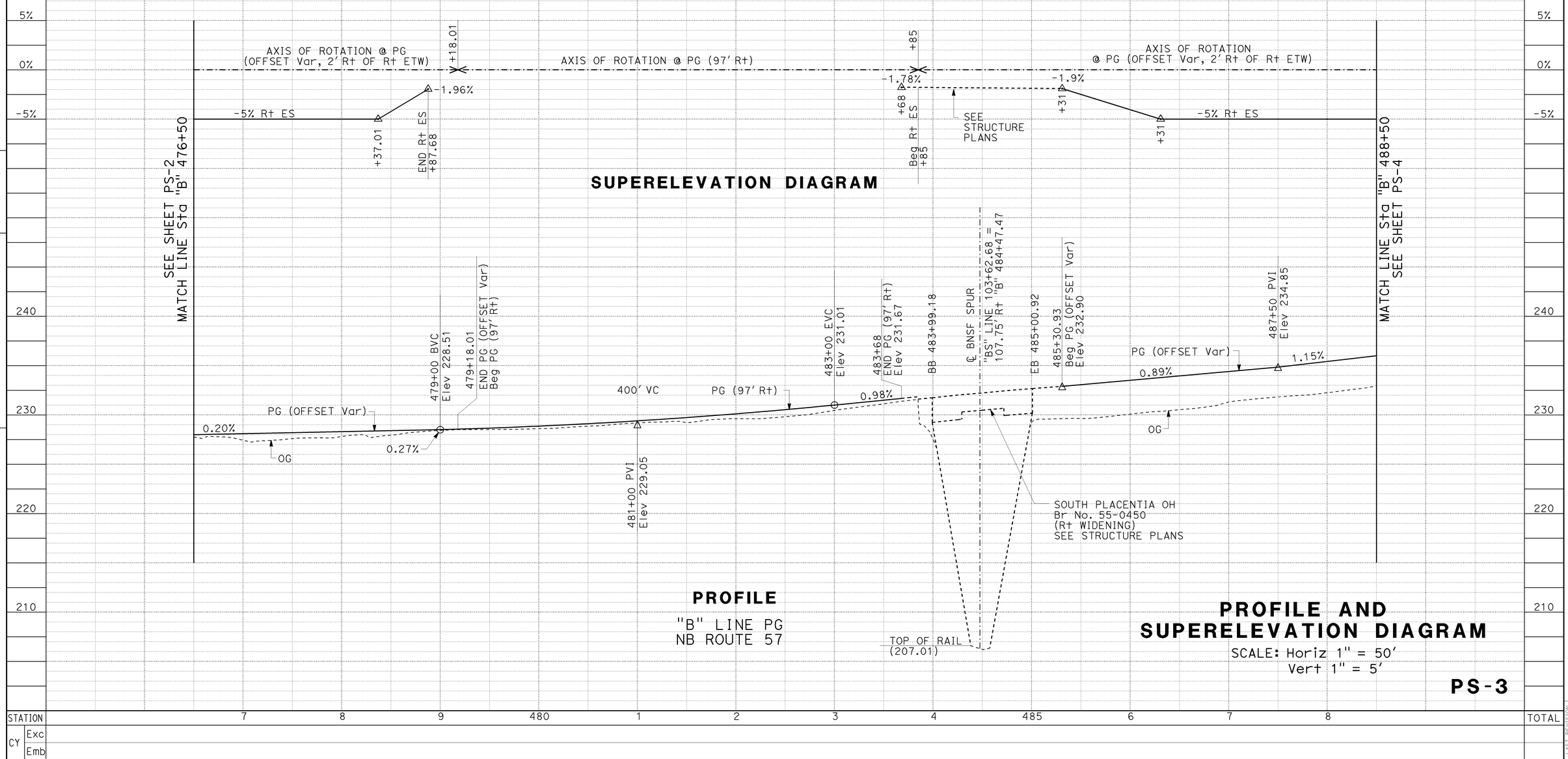

SUPERELEVATION DIAGRAM

PROFILE

"B" LINE PG
NB ROUTE 57

PROFILE AND SUPERELEVATION DIAGRAM

SCALE: Horiz 1" = 50'
Vert 1" = 5'

PS-3

STATE OF CALIFORNIA - DEPARTMENT OF TRANSPORTATION
Caltrans

CONSULTANT FUNCTIONAL SUPERVISOR: GONZALO PEÑA
CALCULATED-DESIGNED BY: SUSAN POMERLEAU
CHECKED BY: JOSUE VAGLIENTY
REVISED BY
DATE REVISED

H:\pdata\10105878\Admin\submittals\2009-07-15 FINAL Electronic-Only Submittal\DGN\rmnguye PLOT Files 2009-07-15 FINAL SUBMITTAL\c0F031fb003.dgn

DATE PLOTTED => 15-DEC-2009
TIME PLOTTED => 13:56
LAST REVISION 08-01-08

Dist	COUNTY	ROUTE	POST MILES TOTAL PROJECT	SHEET No.	TOTAL SHEETS
12	Ora	57	16.2/18.6	25	960

REGISTERED CIVIL ENGINEER — DATE 7/15/09

JOSUE J. VAGLIENTY No. 70783 Exp. 6-30-11 CIVIL — REGISTERED PROFESSIONAL ENGINEER — STATE OF CALIFORNIA

12-14-09
PLANS APPROVAL DATE

THE STATE OF CALIFORNIA OR ITS OFFICERS OR AGENTS SHALL NOT BE RESPONSIBLE FOR THE ACCURACY OR COMPLETENESS OF SCANNED COPIES OF THIS PLAN SHEET.

RBF CONSULTING
14275 ALTON PKWY
IRVINE, CA 92618

OCTA
550 S. MAIN STREET
ORANGE, CA 92863

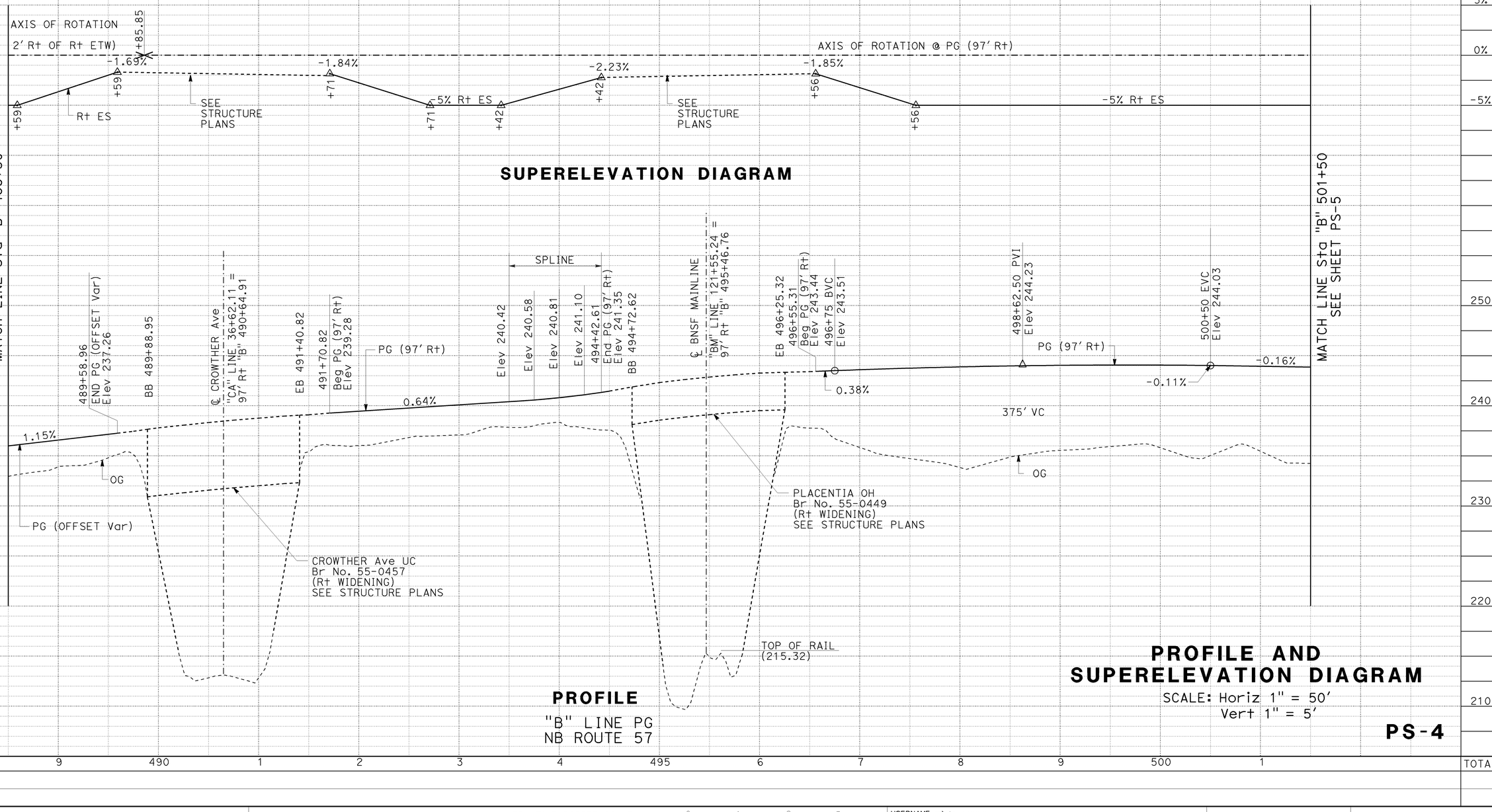

SUPERELEVATION DIAGRAM

PROFILE

"B" LINE PG
NB ROUTE 57

PROFILE AND SUPERELEVATION DIAGRAM

SCALE: Horiz 1" = 50'
Vert 1" = 5'

PS-4

STATE OF CALIFORNIA - DEPARTMENT OF TRANSPORTATION
Caltrans

CONSULTANT FUNCTIONAL SUPERVISOR: GONZALO PEÑA
CALCULATED-DESIGNED BY: SUSAN POMERLEAU
CHECKED BY: JOSUE VAGLIENTY
REVISED BY
DATE REVISED

LAST REVISION — DATE PLOTTED => 15-DEC-2009
08-01-08 — TIME PLOTTED => 13:56

H:\pdata\10105878\Admin\submittals\2009-07-15 FINAL Electronic-Only Submittal\DGN\vangluye
FINAL SUBMITTAL \c0F031fb004.dgn
Files 2009-07-15 13:56

BORDER LAST REVISED 4/11/2008

RELATIVE BORDER SCALE IS IN INCHES 0 1 2 3

USERNAME => trmnguye
DGN FILE => c0F031fb004.dgn

CU 12220

EA 0F0311

Dist	COUNTY	ROUTE	POST MILES TOTAL PROJECT	SHEET No.	TOTAL SHEETS
12	Ora	57	16.2/18.6	26	960

REGISTERED CIVIL ENGINEER — DATE 7/15/09

12-14-09
PLANS APPROVAL DATE

REGISTERED PROFESSIONAL ENGINEER
JOSUE J. VAGLIENTY
No. 70783
Exp. 6-30-11
CIVIL
STATE OF CALIFORNIA

THE STATE OF CALIFORNIA OR ITS OFFICERS OR AGENTS SHALL NOT BE RESPONSIBLE FOR THE ACCURACY OR COMPLETENESS OF SCANNED COPIES OF THIS PLAN SHEET.

RBF CONSULTING
14275 ALTON PKWY
IRVINE, CA 92618

OCTA
550 S. MAIN STREET
ORANGE, CA 92863

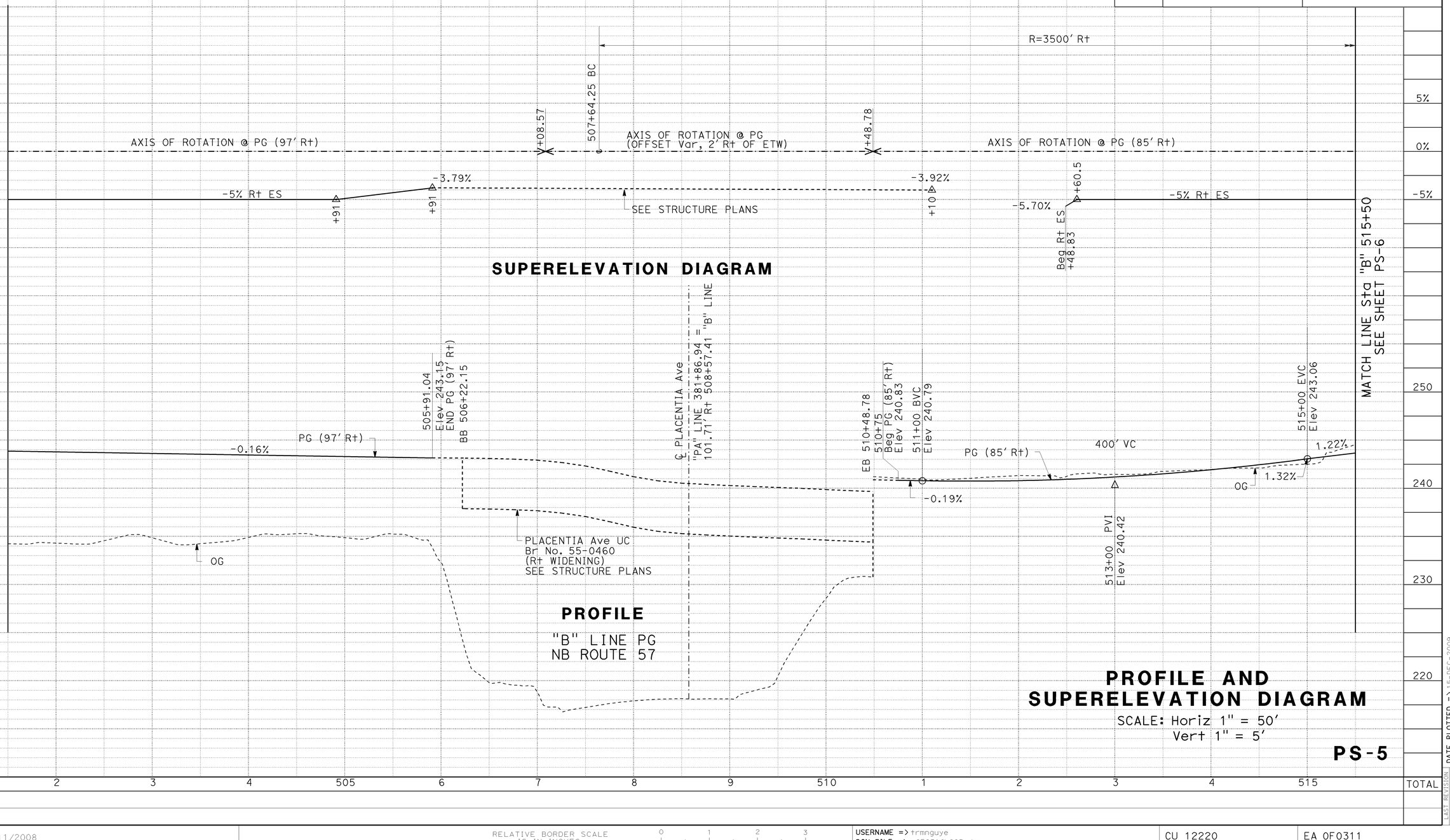

SUPERELEVATION DIAGRAM

PROFILE

"B" LINE PG
NB ROUTE 57

PROFILE AND SUPERELEVATION DIAGRAM

SCALE: Horiz 1" = 50'
Vert 1" = 5'

PS-5

STATE OF CALIFORNIA - DEPARTMENT OF TRANSPORTATION
CONSULTANT FUNCTIONAL SUPERVISOR: GONZALO PEÑA
CALCULATED-DESIGNED BY: SUSAN POMERLEAU
CHECKED BY: JOSUE VAGLIENTY
REVISED BY
DATE REVISED

H:\pdata\10105878\Admin\submittals\2009-07-15 FINAL Electronic-Only Submittal\DGN\rangujye
Files 15-DEC-2009 13:56
SUBMITTAL \c0F031fb005.dgn

LAST REVISION 08-01-08
DATE PLOTTED => 15-DEC-2009
TIME PLOTTED => 13:56

BORDER LAST REVISED 4/11/2008
RELATIVE BORDER SCALE IS IN INCHES 0 1 2 3
USERNAME => trmnguye
DGN FILE => c0F031fb005.dgn
CU 12220
EA 0F0311

Dist	COUNTY	ROUTE	POST MILES TOTAL PROJECT	SHEET No.	TOTAL SHEETS
12	Ora	57	16.2/18.6	27	960

REGISTERED CIVIL ENGINEER 7/15/09 DATE

12-14-09
PLANS APPROVAL DATE

REGISTERED PROFESSIONAL ENGINEER JOSUE J. VAGLIENTY No. 70783 Exp. 6-30-11 CIVIL STATE OF CALIFORNIA

THE STATE OF CALIFORNIA OR ITS OFFICERS OR AGENTS SHALL NOT BE RESPONSIBLE FOR THE ACCURACY OR COMPLETENESS OF SCANNED COPIES OF THIS PLAN SHEET.

RBF CONSULTING
14275 ALTON PKWY
IRVINE, CA 92618

OCTA
550 S. MAIN STREET
ORANGE, CA 92863

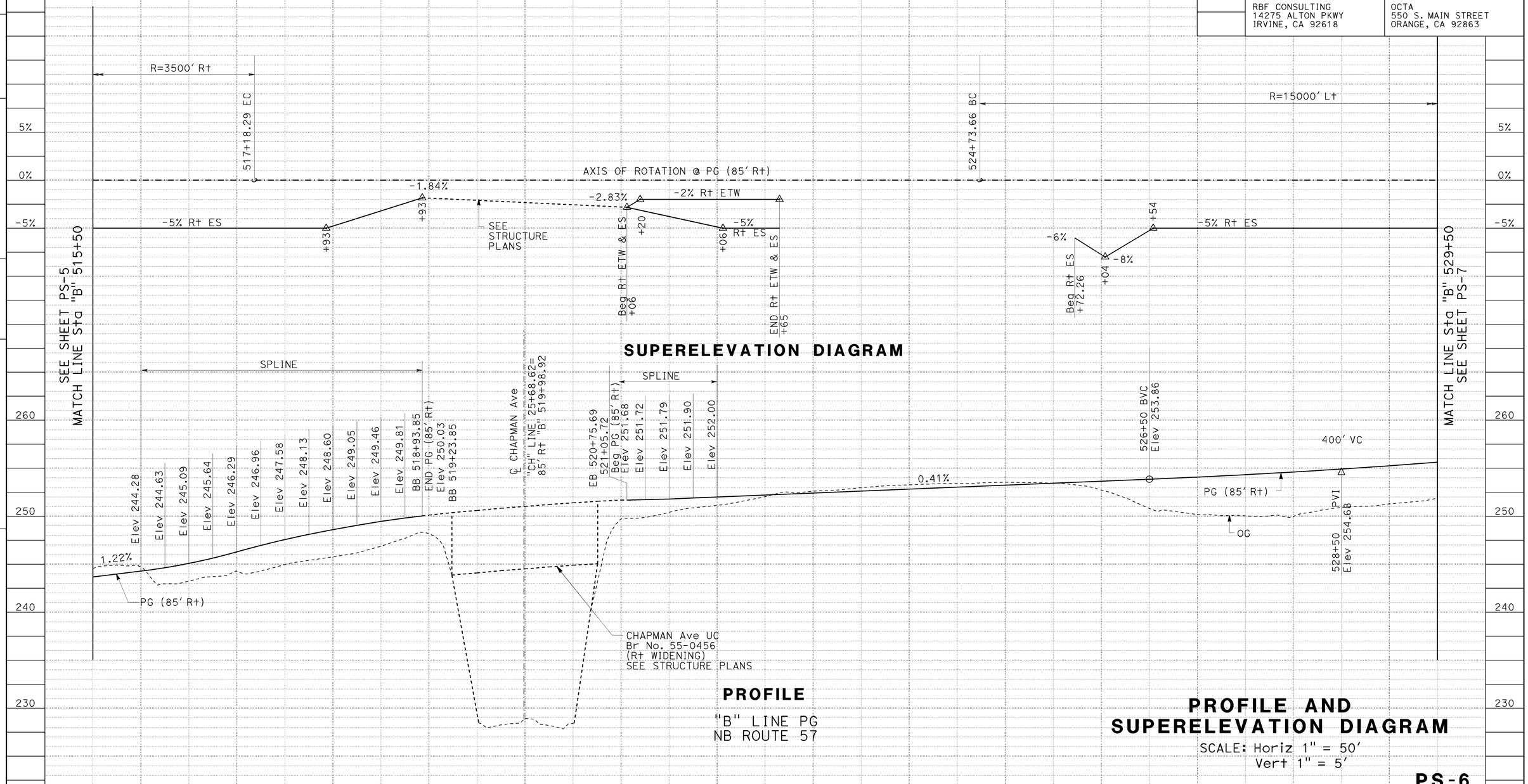

PROFILE AND SUPERELEVATION DIAGRAM

SCALE: Horiz 1" = 50'
Vert 1" = 5'

PS-6

STATE OF CALIFORNIA - DEPARTMENT OF TRANSPORTATION
Caltrans

CONSULTANT FUNCTIONAL SUPERVISOR: GONZALO PEÑA
CALCULATED-DESIGNED BY: SUSAN POMERLEAU
CHECKED BY: JOSUE VAGLIENTY
REVISED BY
DATE REVISED

H:\pdata\10105878\Admin\submittals\2009-07-15 FINAL Electronic-Only Submittal\DGN rmnguye PLOT Files 15-DEC-2009 13:56 FINAL SUBMITTAL\c0F031fb006.dgn

LAST REVISION 08-01-08
DATE PLOTTED => 15-DEC-2009
TIME PLOTTED => 13:56

Dist	COUNTY	ROUTE	POST MILES TOTAL PROJECT	SHEET No.	TOTAL SHEETS
12	Ora	57	16.2/18.6	28	960

REGISTERED CIVIL ENGINEER 7/15/09 DATE

12-14-09
PLANS APPROVAL DATE

REGISTERED PROFESSIONAL ENGINEER JOSUE J. VAGLIENTY No. 70783 Exp. 6-30-11 CIVIL STATE OF CALIFORNIA

THE STATE OF CALIFORNIA OR ITS OFFICERS OR AGENTS SHALL NOT BE RESPONSIBLE FOR THE ACCURACY OR COMPLETENESS OF SCANNED COPIES OF THIS PLAN SHEET.

RBF CONSULTING
14275 ALTON PKWY
IRVINE, CA 92618

OCTA
550 S. MAIN STREET
ORANGE, CA 92863

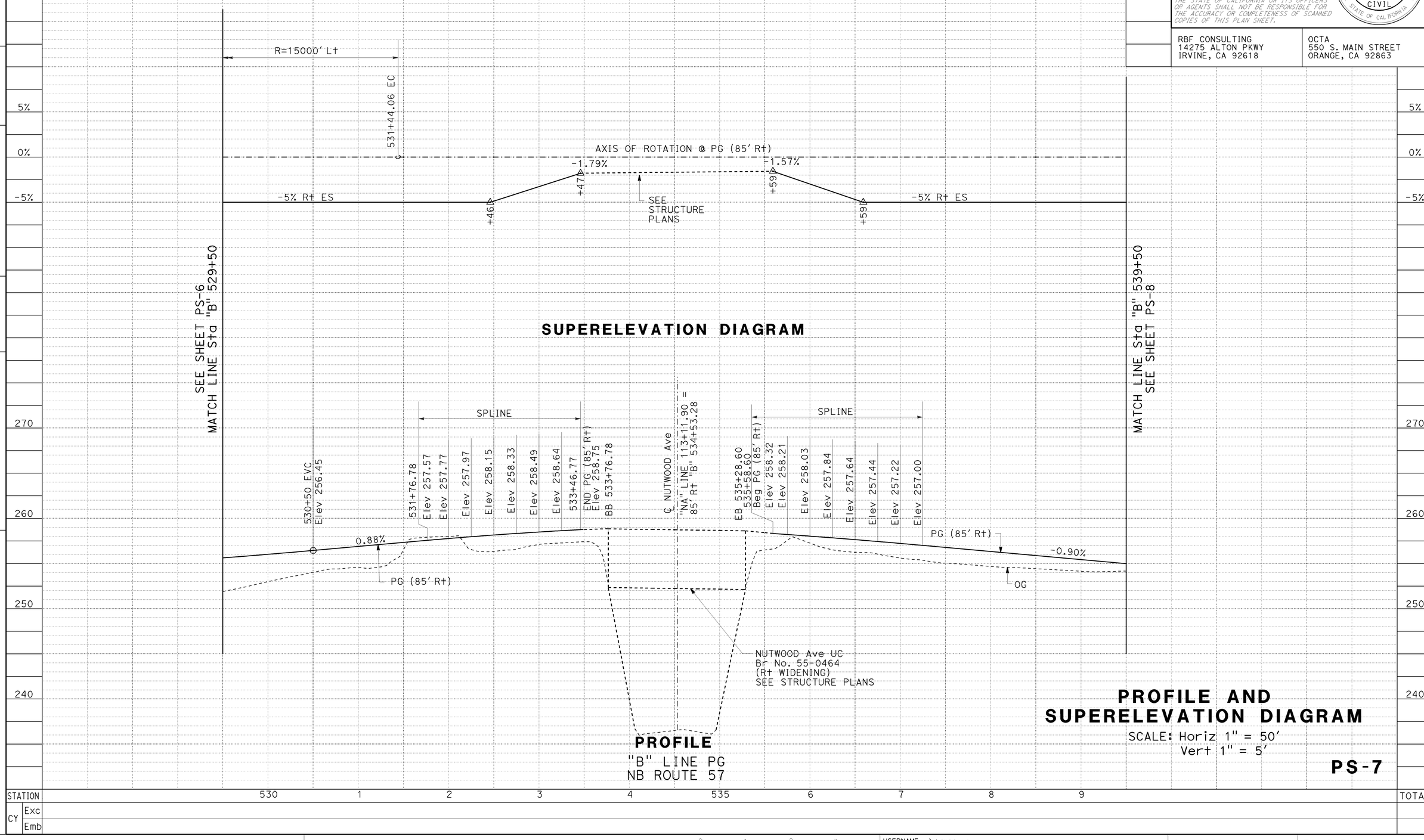

PROFILE AND SUPERELEVATION DIAGRAM

SCALE: Horiz 1" = 50'
Vert 1" = 5'

PS-7

STATE OF CALIFORNIA - DEPARTMENT OF TRANSPORTATION
Caltrans

CONSULTANT FUNCTIONAL SUPERVISOR: GONZALO PEÑA
CALCULATED-DESIGNED BY: SUSAN POMERLEAU
CHECKED BY: JOSUE VAGLIENTY
REVISED BY
DATE REVISED

H:\pdata\10105878\Admin\submittals\2009-07-15 FINAL Electronic-Only Submittal\DGN rmnguye PLOT Files 2009-07-15 FINAL SUBMITTAL\c0F031fb007.dgn

LAST REVISION 08-01-08
DATE PLOTTED => 15-DEC-2009
TIME PLOTTED => 13:56

Dist	COUNTY	ROUTE	POST MILES TOTAL PROJECT	SHEET No.	TOTAL SHEETS
12	Ora	57	16.2/18.6	29	960

REGISTERED CIVIL ENGINEER — DATE 7/15/09

12-14-09
PLANS APPROVAL DATE

REGISTERED PROFESSIONAL ENGINEER
JOSUE J. VAGLIENTY
No. 70783
Exp. 6-30-11
CIVIL
STATE OF CALIFORNIA

THE STATE OF CALIFORNIA OR ITS OFFICERS OR AGENTS SHALL NOT BE RESPONSIBLE FOR THE ACCURACY OR COMPLETENESS OF SCANNED COPIES OF THIS PLAN SHEET.

RBF CONSULTING
14275 ALTON PKWY
IRVINE, CA 92618

OCTA
550 S. MAIN STREET
ORANGE, CA 92863

SUPERELEVATION DIAGRAM

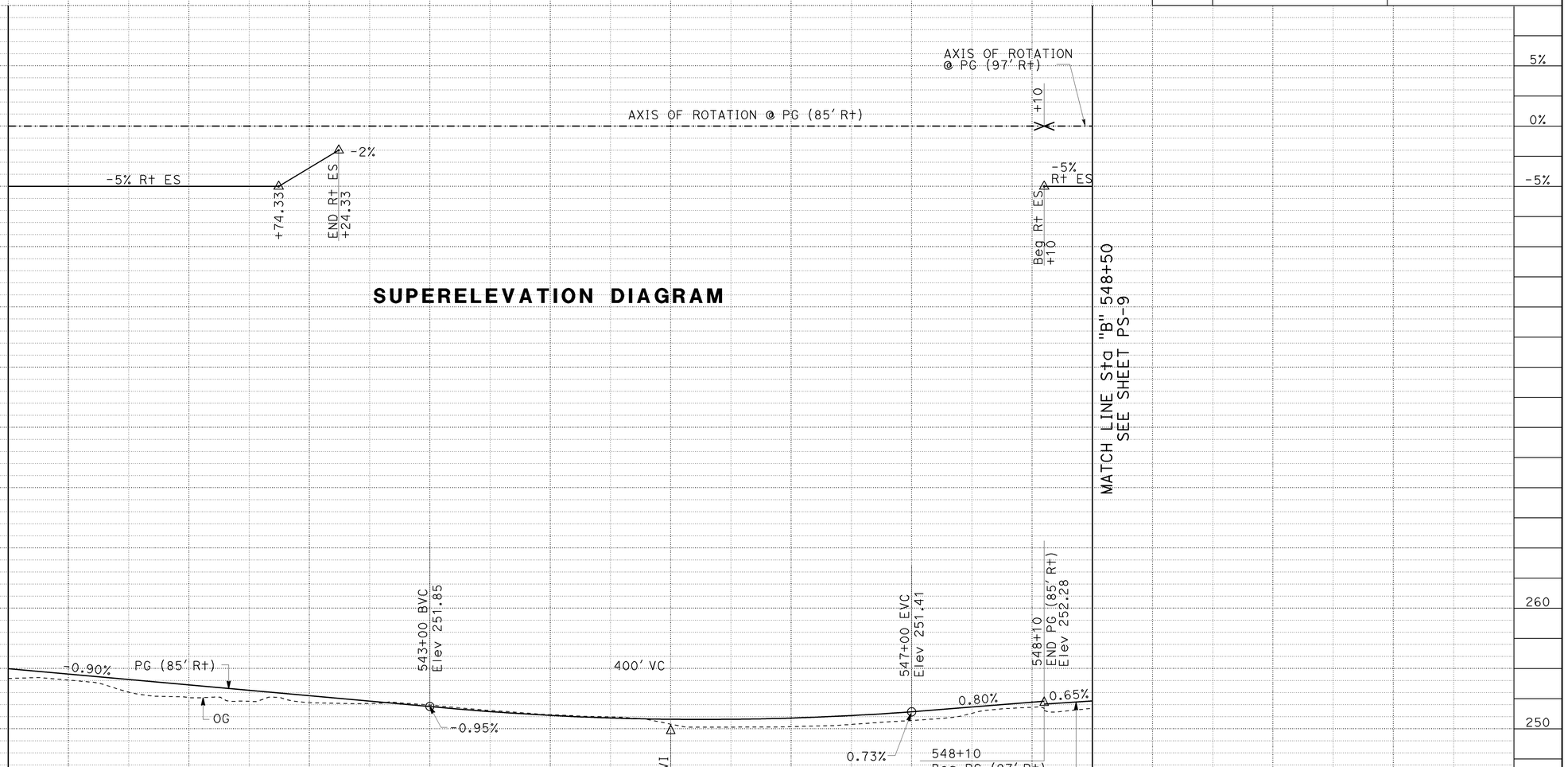

PROFILE

"B" LINE PG
NB ROUTE 57

PROFILE AND SUPERELEVATION DIAGRAM

SCALE: Horiz 1" = 50'
Vert 1" = 5'

PS-8

STATION	540	1	2	3	4	545	6	7	8	TOTAL
CY Exc										
CY Emb										

STATE OF CALIFORNIA - DEPARTMENT OF TRANSPORTATION
Caltrans

CONSULTANT FUNCTIONAL SUPERVISOR: GONZALO PEÑA
CALCULATED-DESIGNED BY: SUSAN POMERLEAU
CHECKED BY: JOSUE VAGLIENTY
REVISED BY
DATE REVISED

LAST REVISION: DATE PLOTTED => 15-DEC-2009, TIME PLOTTED => 13:56
08-01-08

H:\pdata\10105878\Admin\submittals\2009-07-15 FINAL Electronic-Only Submittal\DGN\manguye 15-DEC-2009 13:56

BORDER LAST REVISED 4/11/2008

RELATIVE BORDER SCALE IS IN INCHES 0 1 2 3

USERNAME => trmnguye
DGN FILE => c0F031fb008.dgn

CU 12220

EA 0F0311

Dist	COUNTY	ROUTE	POST MILES TOTAL PROJECT	SHEET No.	TOTAL SHEETS
12	Ora	57	16.2/18.6	30	960

REGISTERED CIVIL ENGINEER — DATE 7/15/09

12-14-09
PLANS APPROVAL DATE

REGISTERED PROFESSIONAL ENGINEER
JOSUE J. VAGLIENTY
No. 70783
Exp. 6-30-11
CIVIL
STATE OF CALIFORNIA

THE STATE OF CALIFORNIA OR ITS OFFICERS OR AGENTS SHALL NOT BE RESPONSIBLE FOR THE ACCURACY OR COMPLETENESS OF SCANNED COPIES OF THIS PLAN SHEET.

RBF CONSULTING
14275 ALTON PKWY
IRVINE, CA 92618

OCTA
550 S. MAIN STREET
ORANGE, CA 92863

SUPERELEVATION DIAGRAM

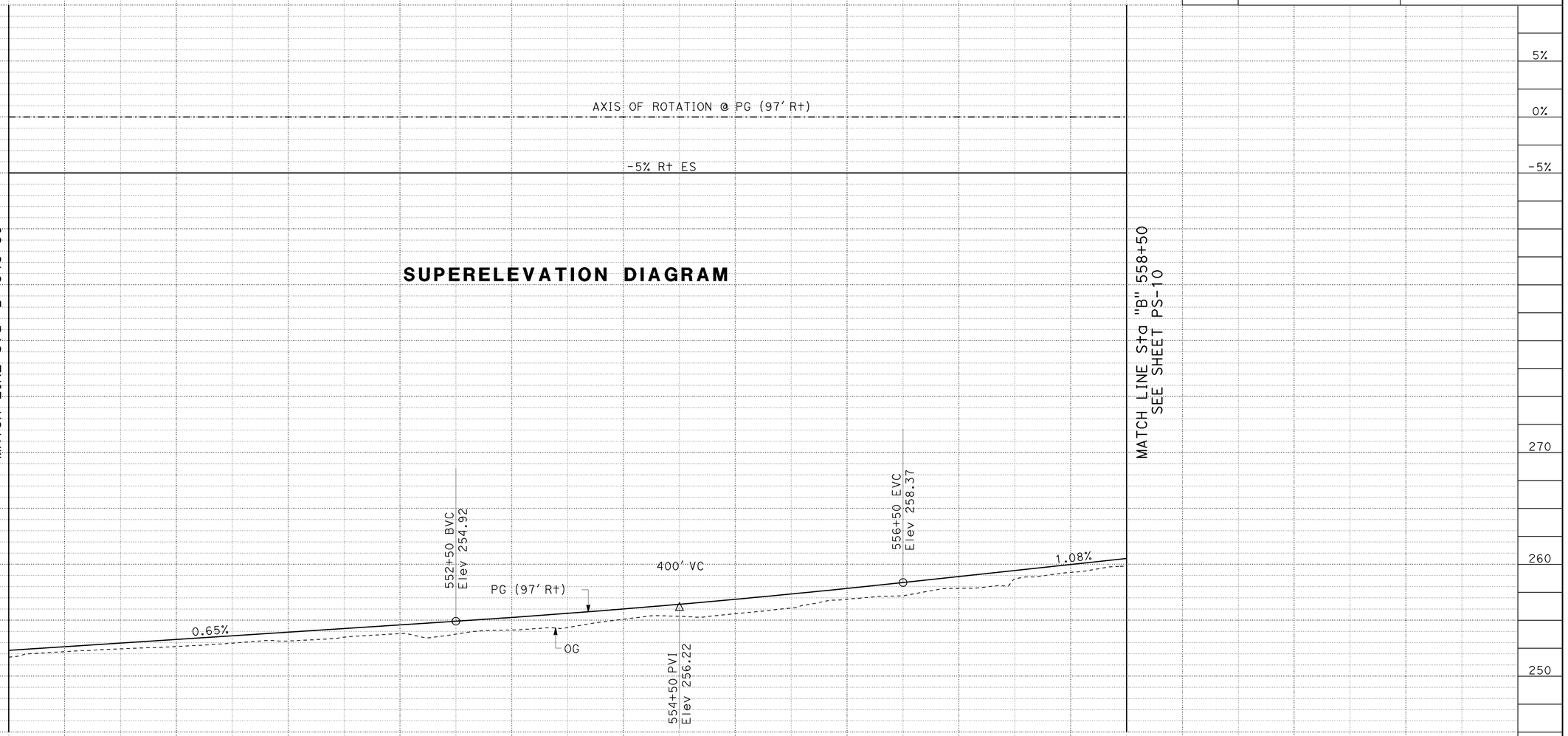

PROFILE

"B" LINE PG
NB ROUTE 57

SUPERELEVATION DIAGRAM

SCALE: Horiz 1" = 50'
Vert 1" = 5'

PS-9

STATION	9	550	1	2	3	4	555	6	7	8	TOTAL
CY Exc											
CY Emb											

STATE OF CALIFORNIA - DEPARTMENT OF TRANSPORTATION
Caltrans
CONSULTANT FUNCTIONAL SUPERVISOR: GONZALO PEÑA
CALCULATED-DESIGNED BY: SUSAN POMERLEAU
CHECKED BY: JOSUE VAGLIENTY
REVISED BY / DATE REVISED

H:\pdata\10105878\Admin\submittals\2009-07-15 FINAL Electronic-Only Submittal\DGN\manguyeLOT Files52009-20709 5:37:57 PM SUBMITTAL \c0F031fb009.dgn

LAST REVISION DATE PLOTTED => 15-DEC-2009
TIME PLOTTED => 13:57
08-01-08

BORDER LAST REVISED 4/11/2008 | RELATIVE BORDER SCALE IS IN INCHES 0 1 2 3 | USERNAME => trmnguye | DGN FILE => c0F031fb009.dgn | CU 12220 | EA 0F0311

Dist	COUNTY	ROUTE	POST MILES TOTAL PROJECT	SHEET No.	TOTAL SHEETS
12	Ora	57	16.2/18.6	31	960

REGISTERED CIVIL ENGINEER 7/15/09 DATE

12-14-09
PLANS APPROVAL DATE

THE STATE OF CALIFORNIA OR ITS OFFICERS OR AGENTS SHALL NOT BE RESPONSIBLE FOR THE ACCURACY OR COMPLETENESS OF SCANNED COPIES OF THIS PLAN SHEET.

REGISTERED PROFESSIONAL ENGINEER
JOSUE J. VAGLIENTY
No. 70783
Exp. 6-30-11
CIVIL
STATE OF CALIFORNIA

RBF CONSULTING
14275 ALTON PKWY
IRVINE, CA 92618

OCTA
550 S. MAIN STREET
ORANGE, CA 92863

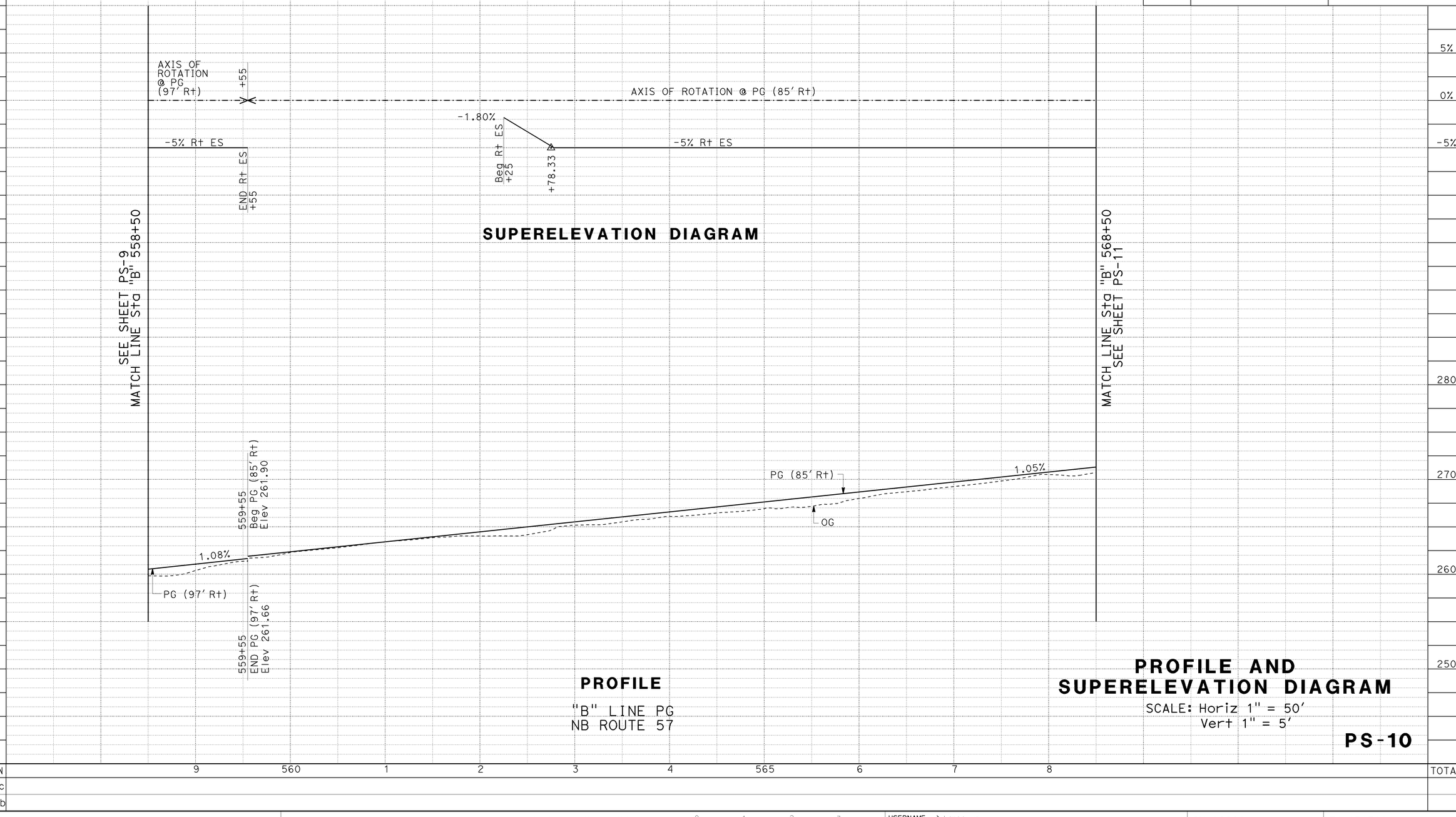

SUPERELEVATION DIAGRAM

PROFILE

"B" LINE PG
NB ROUTE 57

PROFILE AND SUPERELEVATION DIAGRAM

SCALE: Horiz 1" = 50'
Vert 1" = 5'

PS-10

STATE OF CALIFORNIA - DEPARTMENT OF TRANSPORTATION
Caltrans

CONSULTANT FUNCTIONAL SUPERVISOR: GONZALO PEÑA
CALCULATED-DESIGNED BY: SUSAN POMERLEAU
CHECKED BY: JOSUE VAGLIENTY
REVISED BY
DATE REVISED

H:\pdata\10105878\Admin\submittals\2009-07-15 FINAL Electronic-Only Submittal\DGN rmnguye PLOT Files 2009-07-15 FINAL SUBMITTAL\c0F031fb010.dgn

DATE PLOTTED => 15-DEC-2009
TIME PLOTTED => 13:57
LAST REVISION 08-01-08

BORDER LAST REVISED 4/11/2008
RELATIVE BORDER SCALE IS IN INCHES 0 1 2 3
USERNAME => trmnguye
DGN FILE => c0F031fb010.dgn
CU 12220
EA 0F0311

Dist	COUNTY	ROUTE	POST MILES TOTAL PROJECT	SHEET No.	TOTAL SHEETS
12	Ora	57	16.2/18.6	32	960

REGISTERED CIVIL ENGINEER 7/15/09 DATE

12-14-09
PLANS APPROVAL DATE

REGISTERED PROFESSIONAL ENGINEER JOSUE J. VAGLIENTY No. 70783 Exp. 6-30-11 CIVIL STATE OF CALIFORNIA

THE STATE OF CALIFORNIA OR ITS OFFICERS OR AGENTS SHALL NOT BE RESPONSIBLE FOR THE ACCURACY OR COMPLETENESS OF SCANNED COPIES OF THIS PLAN SHEET.

RBF CONSULTING
14275 ALTON PKWY
IRVINE, CA 92618

OCTA
550 S. MAIN STREET
ORANGE, CA 92863

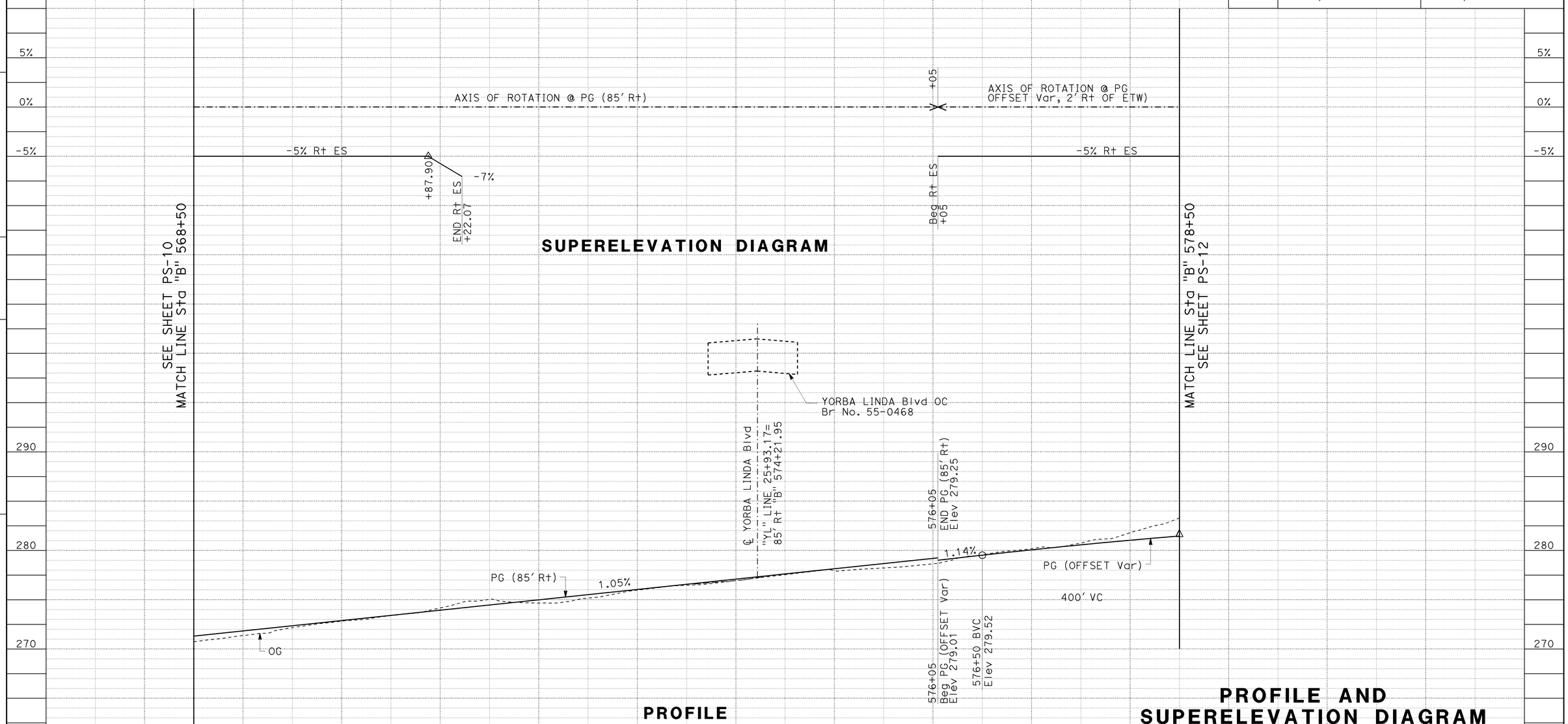

SUPERELEVATION DIAGRAM

PROFILE

"B" LINE PG
NB ROUTE 57

PROFILE AND SUPERELEVATION DIAGRAM

SCALE: Horiz 1" = 50'
Vert 1" = 5'

PS-11

STATION	9	570	1	2	3	4	575	6	7	8	TOTAL
CY Exc											
CY Emb											

STATE OF CALIFORNIA - DEPARTMENT OF TRANSPORTATION
Caltrans
CONSULTANT FUNCTIONAL SUPERVISOR: GONZALO PEÑA
CALCULATED-DESIGNED BY: SUSAN POMERLEAU
CHECKED BY: JOSUE VAGLIENTY
REVISED BY
DATE REVISED

H:\pdata\10105878\Admin\submittals\2009-07-15 FINAL Electronic-Only Submittal\DGN rmnguye PLOT Files 2009-07-15 FINAL SUBMITTAL\c0F031fb011.dgn

LAST REVISION 08-01-08
DATE PLOTTED => 15-DEC-2009
TIME PLOTTED => 13:57

Dist	COUNTY	ROUTE	POST MILES TOTAL PROJECT	SHEET No.	TOTAL SHEETS
12	Ora	57	16.2/18.6	33	960

REGISTERED CIVIL ENGINEER — DATE 7/15/09

JOSUE J. VAGLIENTY No. 70783 Exp. 6-30-11 CIVIL — REGISTERED PROFESSIONAL ENGINEER — STATE OF CALIFORNIA

12-14-09
PLANS APPROVAL DATE

THE STATE OF CALIFORNIA OR ITS OFFICERS OR AGENTS SHALL NOT BE RESPONSIBLE FOR THE ACCURACY OR COMPLETENESS OF SCANNED COPIES OF THIS PLAN SHEET.

RBF CONSULTING
14275 ALTON PKWY
IRVINE, CA 92618

OCTA
550 S. MAIN STREET
ORANGE, CA 92863

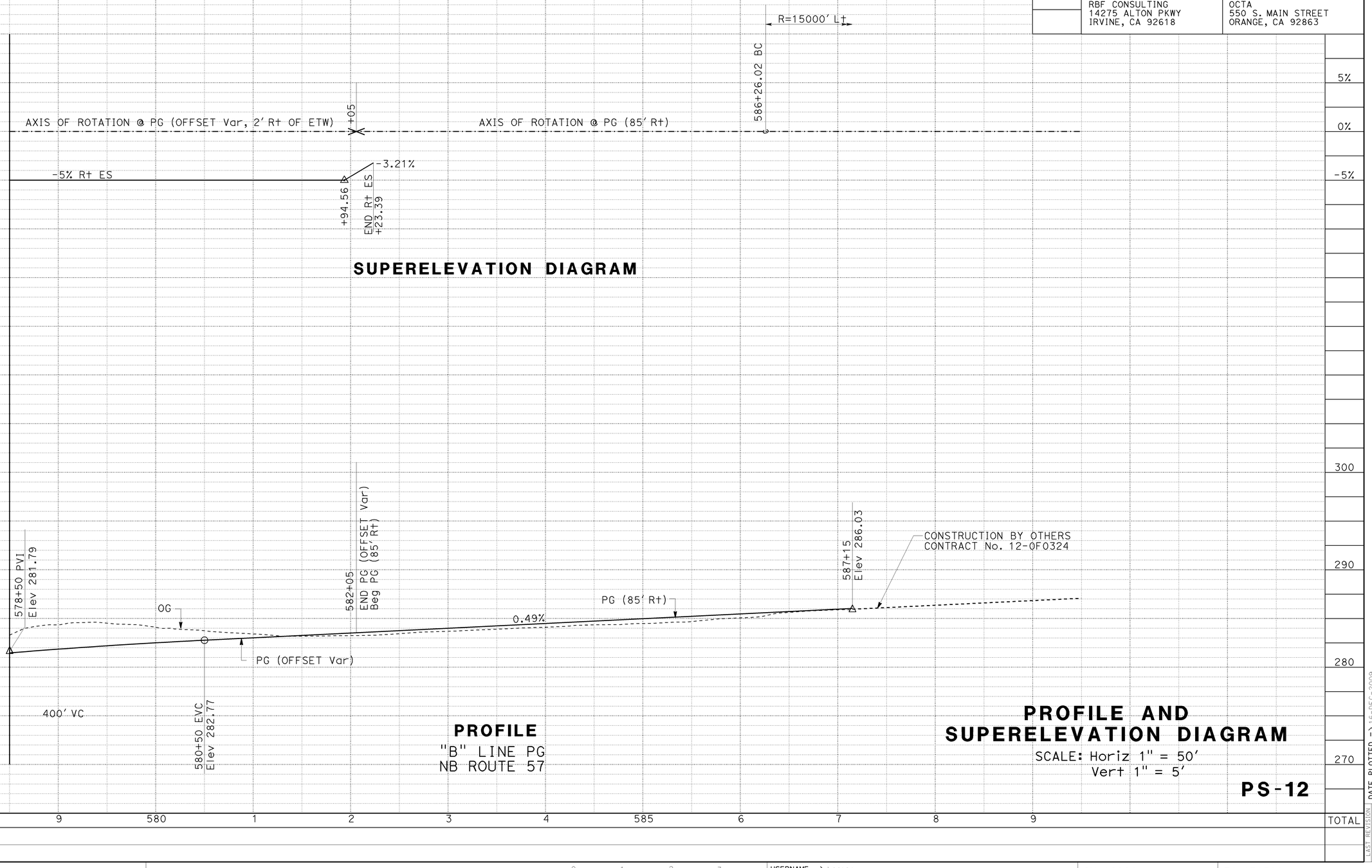

SUPERELEVATION DIAGRAM

PROFILE
"B" LINE PG
NB ROUTE 57

PROFILE AND SUPERELEVATION DIAGRAM

SCALE: Horiz 1" = 50'
Vert 1" = 5'

PS-12

STATE OF CALIFORNIA - DEPARTMENT OF TRANSPORTATION
Caltrans

CONSULTANT FUNCTIONAL SUPERVISOR: GONZALO PEÑA
CALCULATED-DESIGNED BY: SUSAN POMERLEAU
CHECKED BY: JOSUE VAGLIENTY

DATE REVISED	REVISED BY

H:\pdata\10105878\Admin\submittals\2009-07-15 FINAL Electronic-Only Submittal\DGN\c0F031fb012.dgn
File created 2009-07-15 06:12:04
SUBMITTAL \c0F031fb012.dgn

LAST REVISION
DATE PLOTTED => 16-DEC-2009
TIME PLOTTED => 06:25
08-01-08

BORDER LAST REVISED 4/11/2008

RELATIVE BORDER SCALE IS IN INCHES 0 1 2 3

USERNAME => trrene
DGN FILE => c0F031fb012.dgn

CU 12220

EA 0F0311

Dist	COUNTY	ROUTE	POST MILES TOTAL PROJECT	SHEET No.	TOTAL SHEETS
12	Ora	57	16.2/18.6	34	960

REGISTERED CIVIL ENGINEER — DATE 7/15/09

JOSUE J. VAGLIENTY No. 70783 Exp. 6-30-11 CIVIL — REGISTERED PROFESSIONAL ENGINEER — STATE OF CALIFORNIA

12-14-09
PLANS APPROVAL DATE

THE STATE OF CALIFORNIA OR ITS OFFICERS OR AGENTS SHALL NOT BE RESPONSIBLE FOR THE ACCURACY OR COMPLETENESS OF SCANNED COPIES OF THIS PLAN SHEET.

RBF CONSULTING
14275 ALTON PKWY
IRVINE, CA 92618

OCTA
550 S. MAIN STREET
ORANGE, CA 92863

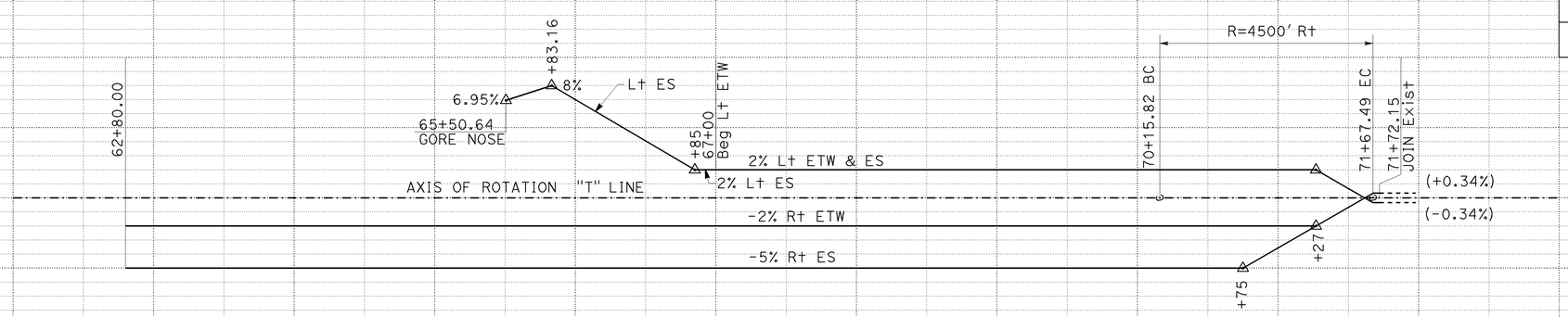

SUPERELEVATION DIAGRAM

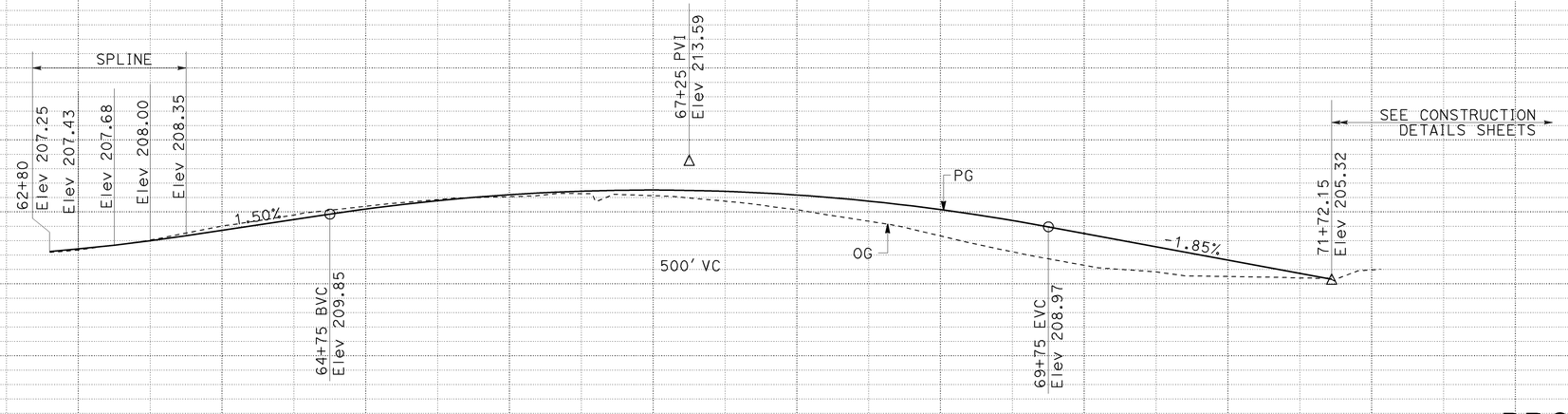

PROFILE

"T" LINE
NB ORANGETHORPE Ave OFF-RAMP

PROFILE AND SUPERELEVATION DIAGRAM

SCALE: Horiz 1" = 50'
Vert 1" = 5'

PS-13

STATION	2	3	4	65	6	7	8	9	70	1	2	TOTAL
CY Exc												
CY Emb												

STATE OF CALIFORNIA - DEPARTMENT OF TRANSPORTATION
Caltrans
CONSULTANT FUNCTIONAL SUPERVISOR: GONZALO PEÑA
CALCULATED-DESIGNED BY: SUSAN POMERLEAU
CHECKED BY: JOSUE VAGLIENTY
REVISED BY
DATE REVISED

LAST REVISION — DATE PLOTTED => 16-DEC-2009 — TIME PLOTTED => 06:25
08-01-08

BORDER LAST REVISED 4/11/2008

RELATIVE BORDER SCALE IS IN INCHES 0 1 2 3

USERNAME => trrene
DGN FILE => c0F031fb013.dgn

CU 12220

EA 0F0311

H:\pdata\10105878\Admin\submittals\2009-07-15 FINAL Electronic-Only Submittal\DGN\c0F031fb013.dgn

Dist	COUNTY	ROUTE	POST MILES TOTAL PROJECT	SHEET No.	TOTAL SHEETS
12	Ora	57	16.2/18.6	35	960

REGISTERED CIVIL ENGINEER — DATE 7/15/09

JOSUE J. VAGLIENTY No. 70783 Exp. 6-30-11 CIVIL — REGISTERED PROFESSIONAL ENGINEER — STATE OF CALIFORNIA

12-14-09
PLANS APPROVAL DATE

THE STATE OF CALIFORNIA OR ITS OFFICERS OR AGENTS SHALL NOT BE RESPONSIBLE FOR THE ACCURACY OR COMPLETENESS OF SCANNED COPIES OF THIS PLAN SHEET.

RBF CONSULTING
14275 ALTON PKWY
IRVINE, CA 92618

OCTA
550 S. MAIN STREET
ORANGE, CA 92863

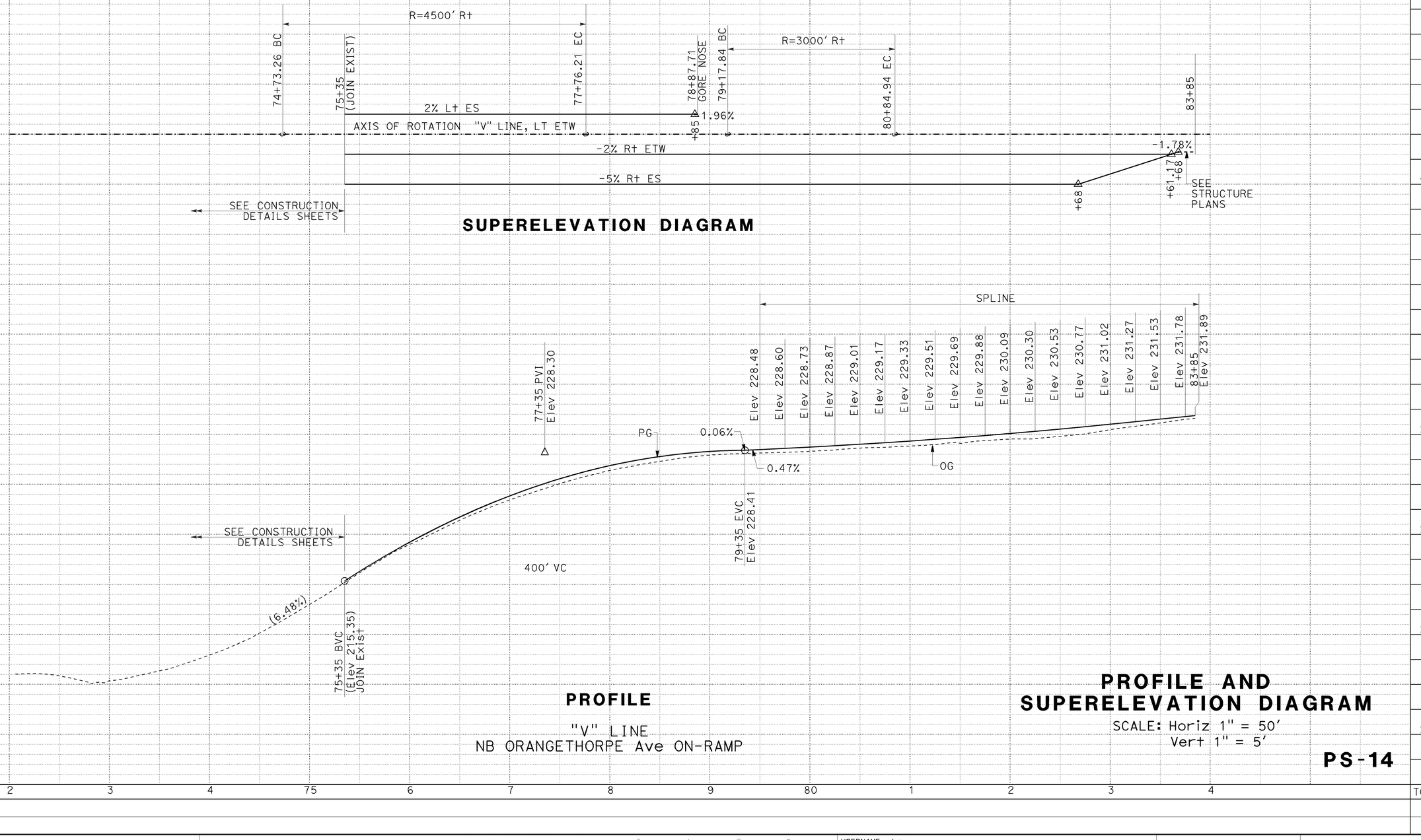

SUPERELEVATION DIAGRAM

PROFILE

"V" LINE
NB ORANGETHORPE Ave ON-RAMP

PROFILE AND SUPERELEVATION DIAGRAM

SCALE: Horiz 1" = 50'
Vert 1" = 5'

PS-14

CY Exc / Emb

STATE OF CALIFORNIA - DEPARTMENT OF TRANSPORTATION
CONSULTANT FUNCTIONAL SUPERVISOR: GONZALO PEÑA
CALCULATED-DESIGNED BY: SUSAN POMERLEAU
CHECKED BY: JOSUE VAGLIENTY
REVISED BY / DATE REVISED

LAST REVISION: DATE PLOTTED => 16-DEC-2009 / TIME PLOTTED => 08-01-08 06:25

H:\pdata\10105878\Admin\submittals\2009-07-15 FINAL Electronic-Only Submittal\DGN\c0F031fb014.dgn
DGN created 12-DEC-2009 07:21AM
PLOT File 16-DEC-2009 06:25

BORDER LAST REVISED 4/11/2008

RELATIVE BORDER SCALE IS IN INCHES 0 1 2 3

USERNAME => trrene
DGN FILE => c0F031fb014.dgn

CU 12220

EA 0F0311

Dist	COUNTY	ROUTE	POST MILES TOTAL PROJECT	SHEET No.	TOTAL SHEETS
12	Ora	57	16.2/18.6	36	960

REGISTERED CIVIL ENGINEER — 7/15/09 DATE

JOSUE J. VAGLIENTY No. 70783 Exp. 6-30-11 CIVIL — REGISTERED PROFESSIONAL ENGINEER — STATE OF CALIFORNIA

12-14-09
PLANS APPROVAL DATE

THE STATE OF CALIFORNIA OR ITS OFFICERS OR AGENTS SHALL NOT BE RESPONSIBLE FOR THE ACCURACY OR COMPLETENESS OF SCANNED COPIES OF THIS PLAN SHEET.

RBF CONSULTING
14275 ALTON PKWY
IRVINE, CA 92618

OCTA
550 S. MAIN STREET
ORANGE, CA 92863

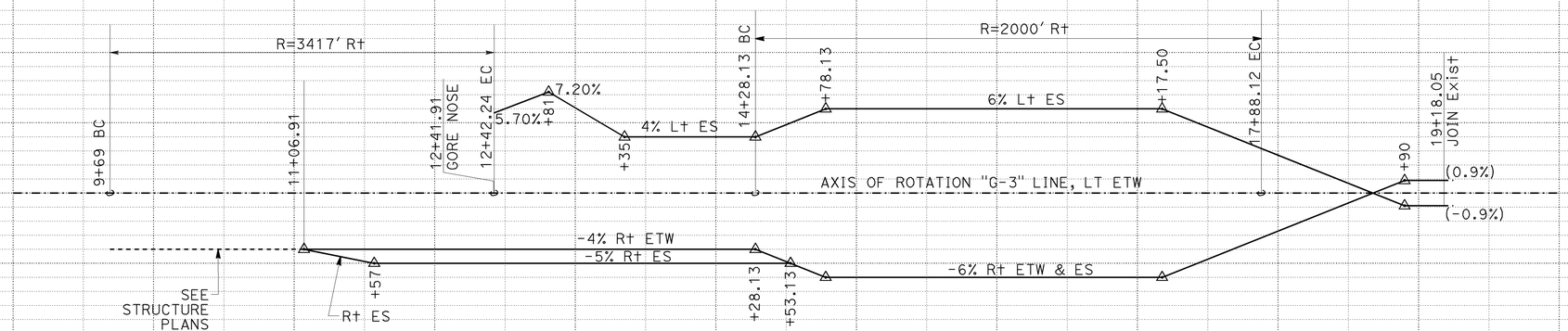

SUPERELEVATION DIAGRAM

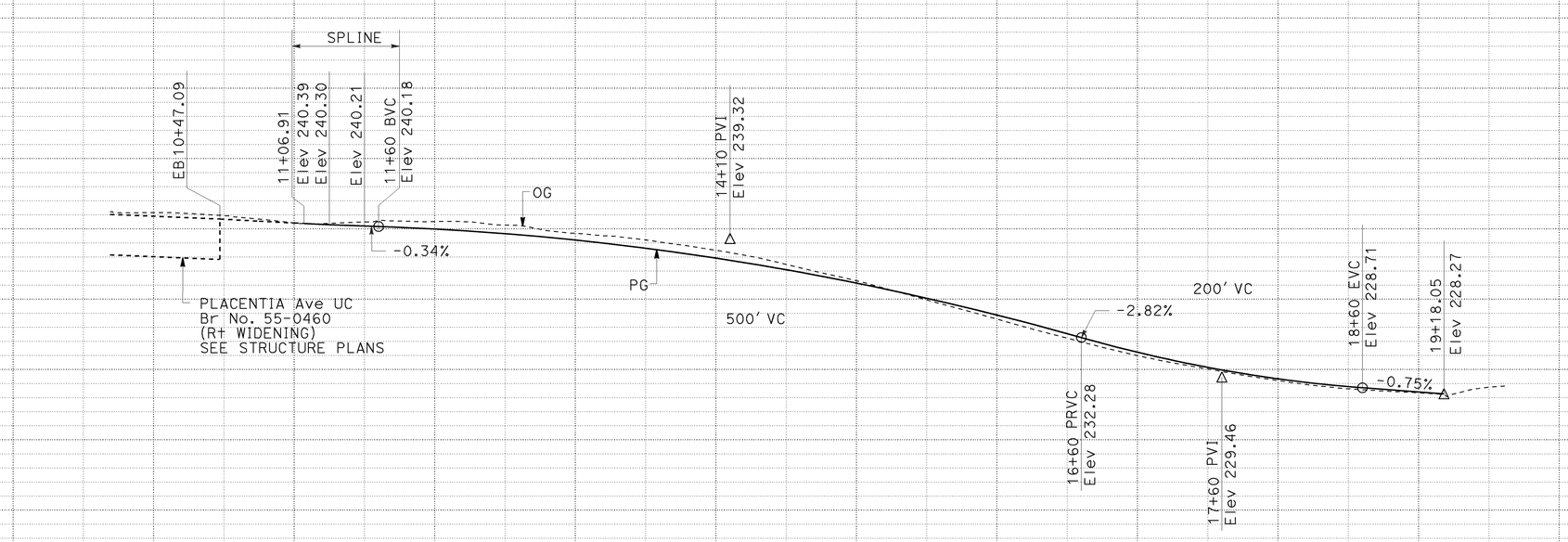

PROFILE

"G-3" LINE
NB CHAPMAN Ave OFF-RAMP

PROFILE AND SUPERELEVATION DIAGRAM

SCALE: Horiz 1" = 50'
Vert 1" = 5'

PS-15

STATION	9	10	1	2	3	4	15	6	7	8	9	20	TOTAL
CY Exc													
CY Emb													

5% 0% -5%

STATE OF CALIFORNIA - DEPARTMENT OF TRANSPORTATION
CONSULTANT FUNCTIONAL SUPERVISOR: GONZALO PEÑA
CALCULATED-DESIGNED BY: SUSAN POMERLEAU
CHECKED BY: JOSUE VAGLIENTY
REVISED BY
DATE REVISED

H:\pdata\10105878\Admin\submittals\2009-07-15 FINAL Electronic-Only Submittal\DGN\c0F031fb015.dgn
DGN created 16-DEC-2009 06:25:20 by trrene
FINAL SUBMITTAL c0F031fb015.dgn

LAST REVISION 08-01-08
DATE PLOTTED => 16-DEC-2009
TIME PLOTTED => 06:25

BORDER LAST REVISED 4/11/2008
RELATIVE BORDER SCALE IS IN INCHES 0 1 2 3
USERNAME => trrene
DGN FILE => c0F031fb015.dgn
CU 12220
EA 0F0311

Dist	COUNTY	ROUTE	POST MILES TOTAL PROJECT	SHEET No.	TOTAL SHEETS
12	Ora	57	16.2/18.6	37	960

REGISTERED CIVIL ENGINEER 7/15/09 DATE

12-14-09
PLANS APPROVAL DATE

THE STATE OF CALIFORNIA OR ITS OFFICERS OR AGENTS SHALL NOT BE RESPONSIBLE FOR THE ACCURACY OR COMPLETENESS OF SCANNED COPIES OF THIS PLAN SHEET.

REGISTERED PROFESSIONAL ENGINEER JOSUE J. VAGLIENTY No. 70783 Exp. 6-30-11 CIVIL STATE OF CALIFORNIA

RBF CONSULTING
14275 ALTON PKWY
IRVINE, CA 92618

OCTA
550 S. MAIN STREET
ORANGE, CA 92863

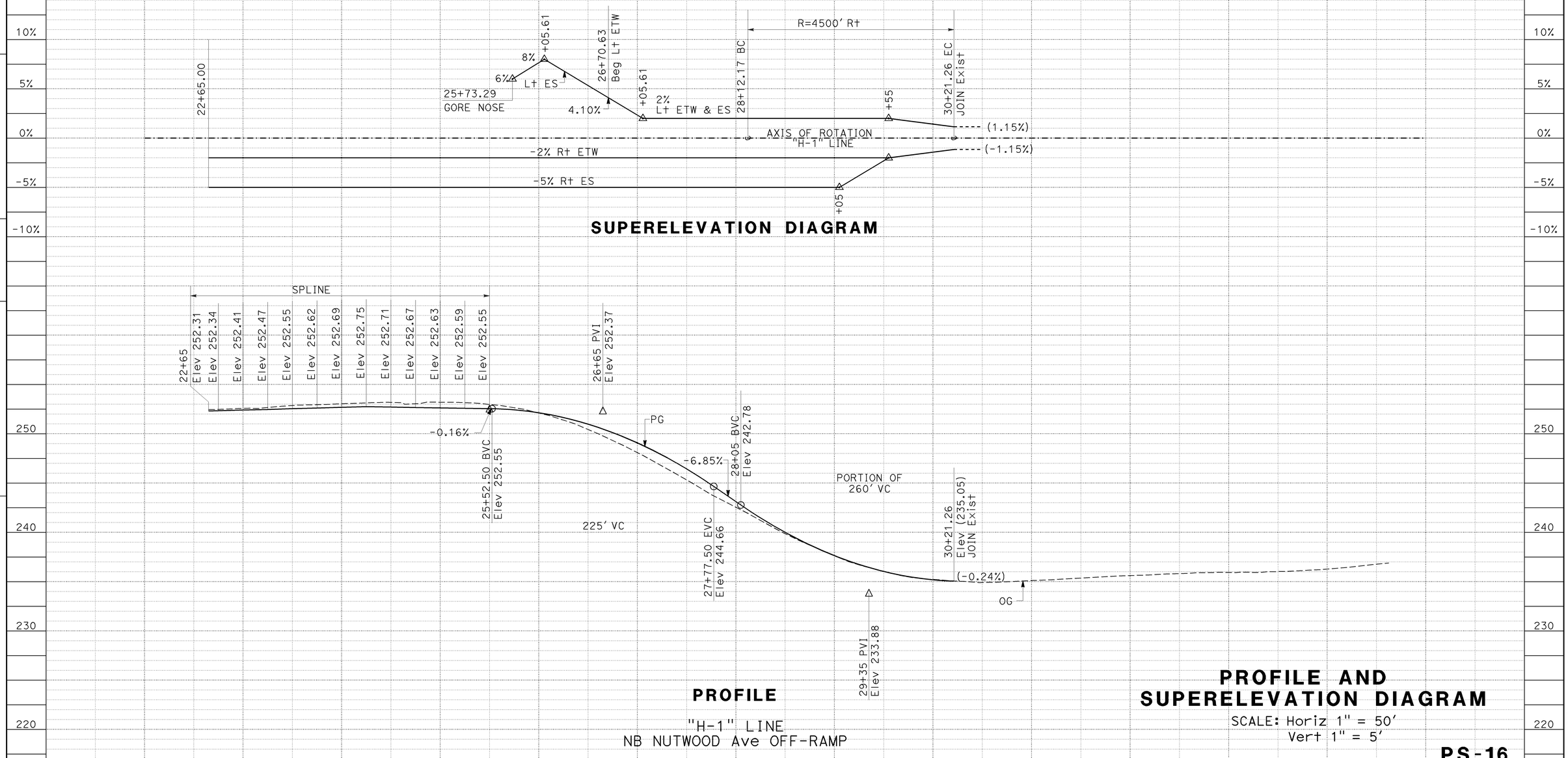

PROFILE AND SUPERELEVATION DIAGRAM

SCALE: Horiz 1" = 50'
Vert 1" = 5'

PS-16

STATE OF CALIFORNIA - DEPARTMENT OF TRANSPORTATION
Caltrans

CONSULTANT FUNCTIONAL SUPERVISOR: GONZALO PEÑA
CALCULATED-DESIGNED BY: SUSAN POMERLEAU
CHECKED BY: JOSUE VAGLIENTY
REVISED BY
DATE REVISED

H:\pdata\10105878\Admin\submittals\2009-07-15 FINAL Electronic-Only Submittal\DGN-rene IPLOT File\c0F031fb016.dgn

DATE PLOTTED => 16-DEC-2009
TIME PLOTTED => 06:25
LAST REVISION 08-01-08

Dist	COUNTY	ROUTE	POST MILES TOTAL PROJECT	SHEET No.	TOTAL SHEETS
12	Ora	57	16.2/18.6	38	960

REGISTERED CIVIL ENGINEER — DATE 7/15/09

12-14-09
PLANS APPROVAL DATE

REGISTERED PROFESSIONAL ENGINEER
JOSUE J. VAGLIENTY
No. 70783
Exp. 6-30-11
CIVIL
STATE OF CALIFORNIA

THE STATE OF CALIFORNIA OR ITS OFFICERS OR AGENTS SHALL NOT BE RESPONSIBLE FOR THE ACCURACY OR COMPLETENESS OF SCANNED COPIES OF THIS PLAN SHEET.

RBF CONSULTING
14275 ALTON PKWY
IRVINE, CA 92618

OCTA
550 S. MAIN STREET
ORANGE, CA 92863

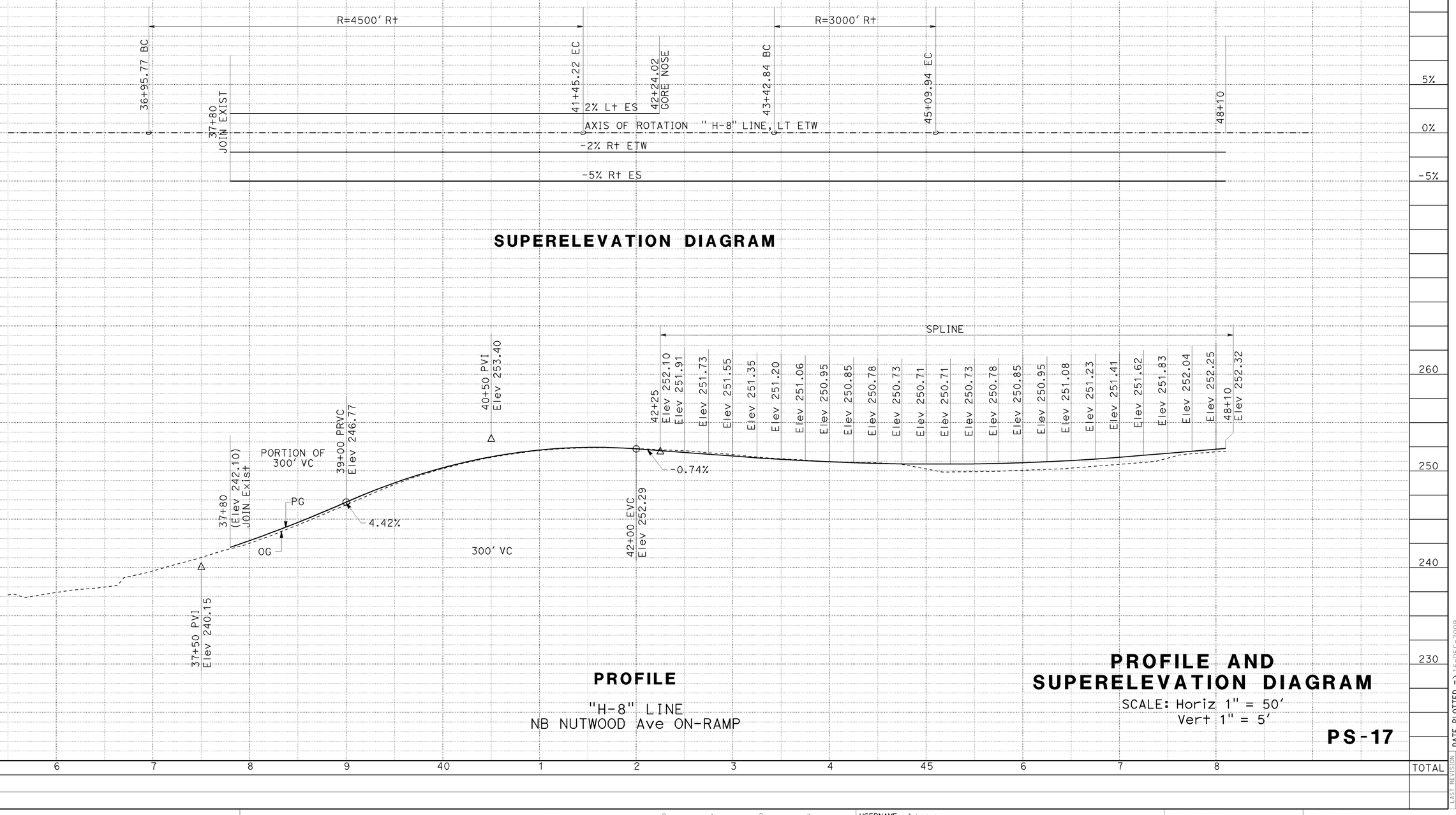

PROFILE

"H-8" LINE
NB NUTWOOD Ave ON-RAMP

PROFILE AND SUPERELEVATION DIAGRAM

SCALE: Horiz 1" = 50'
Vert 1" = 5'

PS-17

STATE OF CALIFORNIA - DEPARTMENT OF TRANSPORTATION
Caltrans
CONSULTANT FUNCTIONAL SUPERVISOR: GONZALO PEÑA
CALCULATED-DESIGNED BY: SUSAN POMERLEAU
CHECKED BY: JOSUE VAGLIENTY
DATE REVISED
REVISED BY

H:\pdata\10105878\Admin\submittals\2009-07-15 FINAL Electronic-Only Submittal\DGN\c0F031fb017.dgn
DGN name: IPLOT File: c0F031fb017.dgn 16-DEC-2009 06:26 SUBMITTAL

LAST REVISION
DATE PLOTTED => 16-DEC-2009
TIME PLOTTED => 06:26
08-01-08

BORDER LAST REVISED 4/11/2008

RELATIVE BORDER SCALE IS IN INCHES 0 1 2 3

USERNAME => trrene
DGN FILE => c0F031fb017.dgn

CU 12220

EA 0F0311

Dist	COUNTY	ROUTE	POST MILES TOTAL PROJECT	SHEET No.	TOTAL SHEETS
12	Ora	57	16.2/18.6	39	960

REGISTERED CIVIL ENGINEER 7/15/09 DATE

12-14-09
PLANS APPROVAL DATE

REGISTERED PROFESSIONAL ENGINEER JOSUE J. VAGLIENTY No. 70783 Exp. 6-30-11 CIVIL STATE OF CALIFORNIA

THE STATE OF CALIFORNIA OR ITS OFFICERS OR AGENTS SHALL NOT BE RESPONSIBLE FOR THE ACCURACY OR COMPLETENESS OF SCANNED COPIES OF THIS PLAN SHEET.

RBF CONSULTING
14275 ALTON PKWY
IRVINE, CA 92618

OCTA
550 S. MAIN STREET
ORANGE, CA 92863

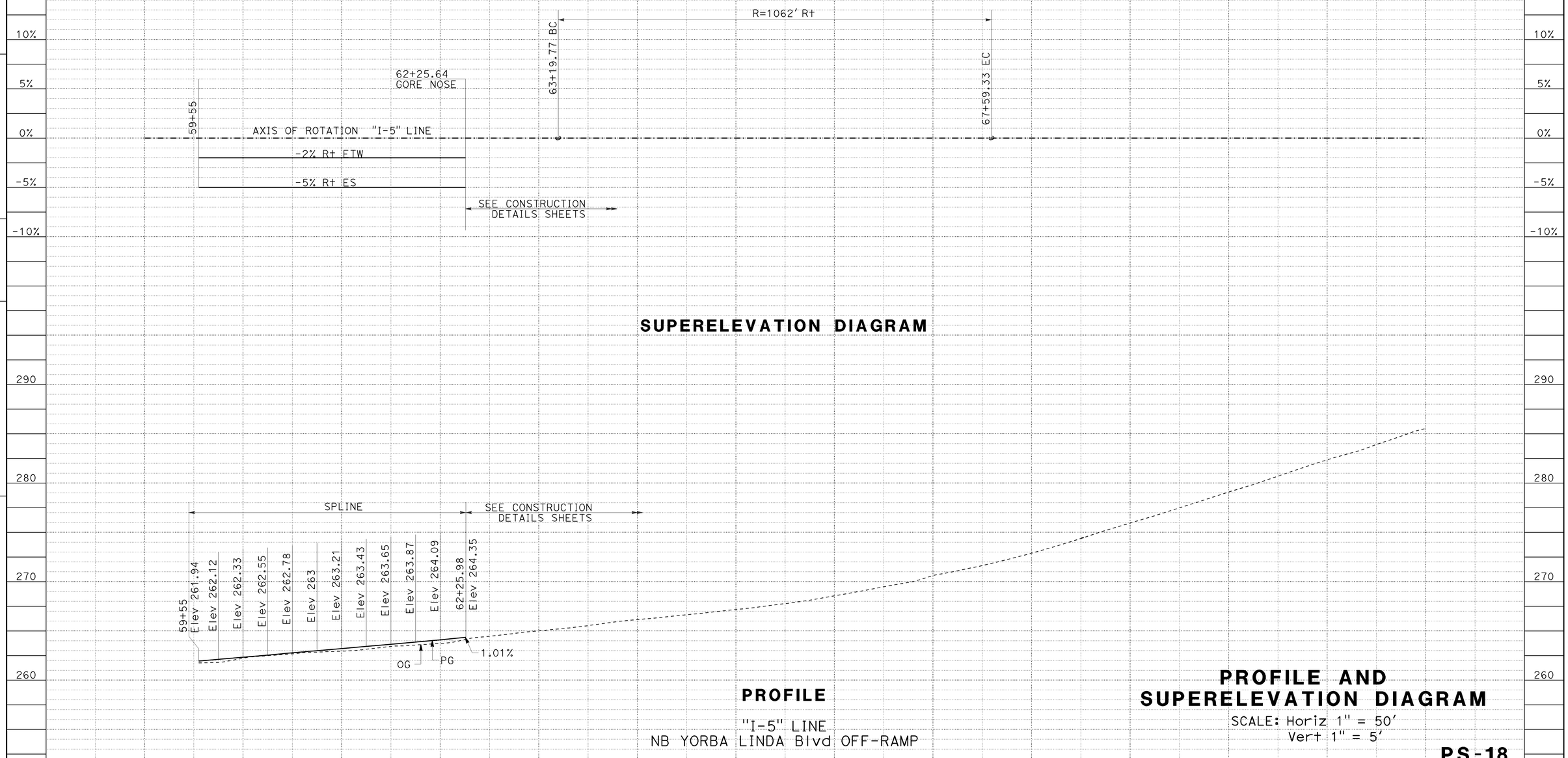

PROFILE AND SUPERELEVATION DIAGRAM

SCALE: Horiz 1" = 50'
Vert 1" = 5'

PS-18

STATE OF CALIFORNIA - DEPARTMENT OF TRANSPORTATION
Caltrans

CONSULTANT FUNCTIONAL SUPERVISOR: GONZALO PEÑA
CALCULATED-DESIGNED BY: SUSAN POMERLEAU
CHECKED BY: JOSUE VAGLIENTY
REVISED BY
DATE REVISED

H:\pdata\10105878\Admin\submittals\2009-07-15 FINAL Electronic-Only Submittal\DGN-rene IPLOT File\c0F031fb018.dgn

LAST REVISION 08-01-08
DATE PLOTTED => 16-DEC-2009
TIME PLOTTED => 06:26

BORDER LAST REVISED 4/11/2008
RELATIVE BORDER SCALE IS IN INCHES 0 1 2 3
USERNAME => trrene
DGN FILE => c0F031fb018.dgn
CU 12220
EA 0F0311

Dist	COUNTY	ROUTE	POST MILES TOTAL PROJECT	SHEET No.	TOTAL SHEETS
12	Ora	57	16.2/18.6	40	960

REGISTERED CIVIL ENGINEER — DATE 7/15/09

12-14-09
PLANS APPROVAL DATE

REGISTERED PROFESSIONAL ENGINEER
JOSUE J. VAGLIENTY
No. 70783
Exp. 6-30-11
CIVIL
STATE OF CALIFORNIA

THE STATE OF CALIFORNIA OR ITS OFFICERS OR AGENTS SHALL NOT BE RESPONSIBLE FOR THE ACCURACY OR COMPLETENESS OF SCANNED COPIES OF THIS PLAN SHEET.

RBF CONSULTING
14275 ALTON PKWY
IRVINE, CA 92618

OCTA
550 S. MAIN STREET
ORANGE, CA 92863

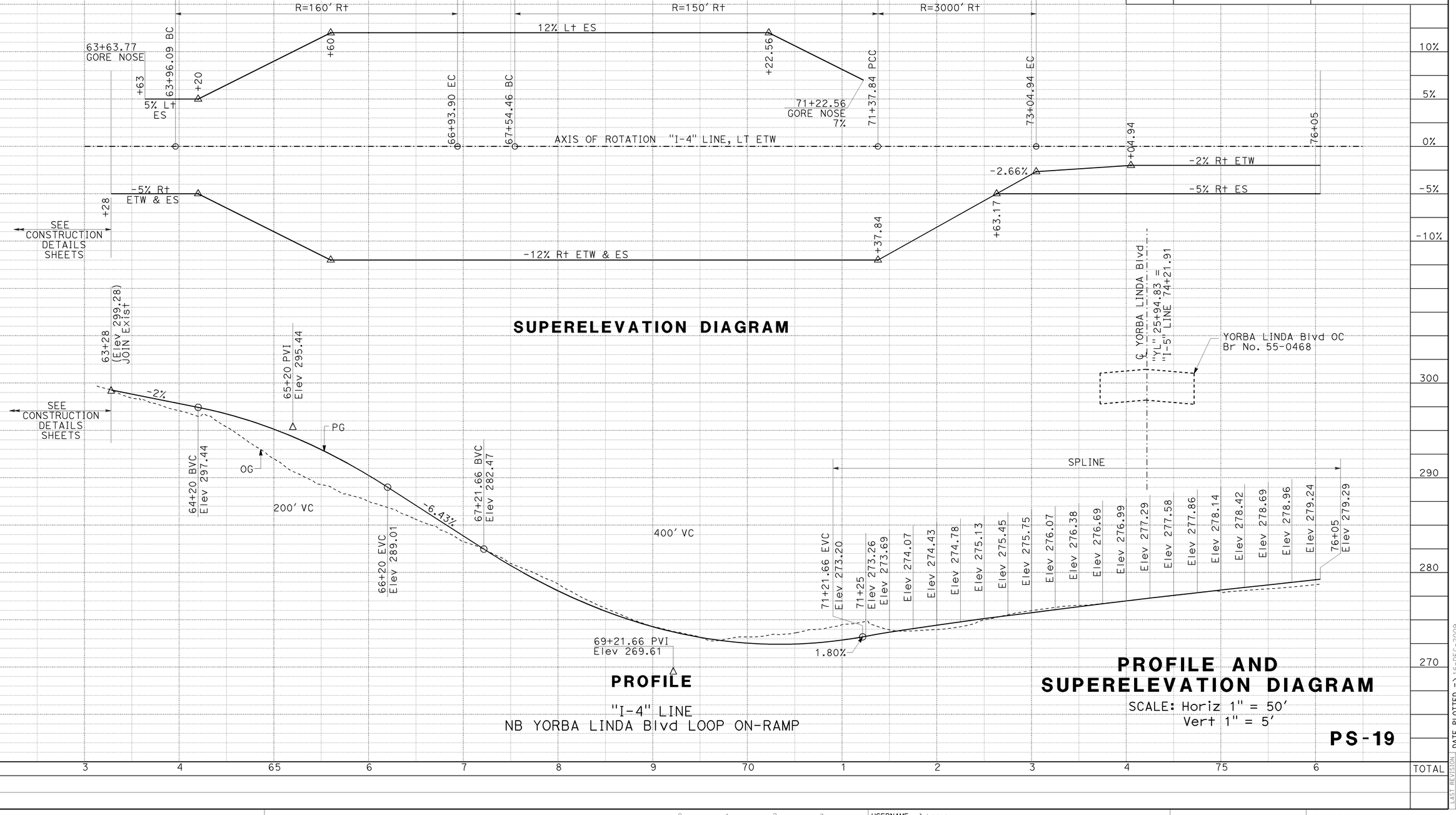

H:\pdata\10105878\Admin\submittals\2009-07-15 FINAL Electronic-Only Submittal\DGN\c0F031fb019.dgn
STATE OF CALIFORNIA - DEPARTMENT OF TRANSPORTATION
Caltrans
CONSULTANT FUNCTIONAL SUPERVISOR: GONZALO PEÑA
CALCULATED-DESIGNED BY: SUSAN POMERLEAU
CHECKED BY: JOSUE VAGLIENTY
REVISED BY
DATE REVISED
LAST REVISION DATE PLOTTED => 16-DEC-2009
TIME PLOTTED => 06:26
08-01-08

BORDER LAST REVISED 4/11/2008
RELATIVE BORDER SCALE IS IN INCHES 0 1 2 3
USERNAME => trrene
DGN FILE => c0F031fb019.dgn
CU 12220
EA 0F0311

Dist	COUNTY	ROUTE	POST MILES TOTAL PROJECT	SHEET No.	TOTAL SHEETS
12	Ora	57	16.2/18.6	41	960

REGISTERED CIVIL ENGINEER — DATE 7/15/09

12-14-09
PLANS APPROVAL DATE

REGISTERED PROFESSIONAL ENGINEER
JOSUE J. VAGLIENTY
No. 70783
Exp. 6-30-11
CIVIL
STATE OF CALIFORNIA

THE STATE OF CALIFORNIA OR ITS OFFICERS OR AGENTS SHALL NOT BE RESPONSIBLE FOR THE ACCURACY OR COMPLETENESS OF SCANNED COPIES OF THIS PLAN SHEET.

RBF CONSULTING
14275 ALTON PKWY
IRVINE, CA 92618

OCTA
550 S. MAIN STREET
ORANGE, CA 92863

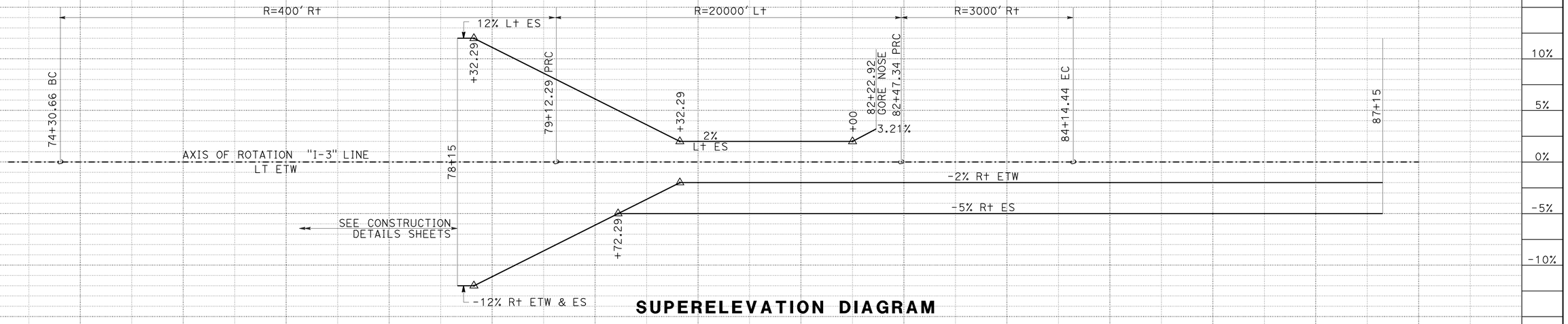

SUPERELEVATION DIAGRAM

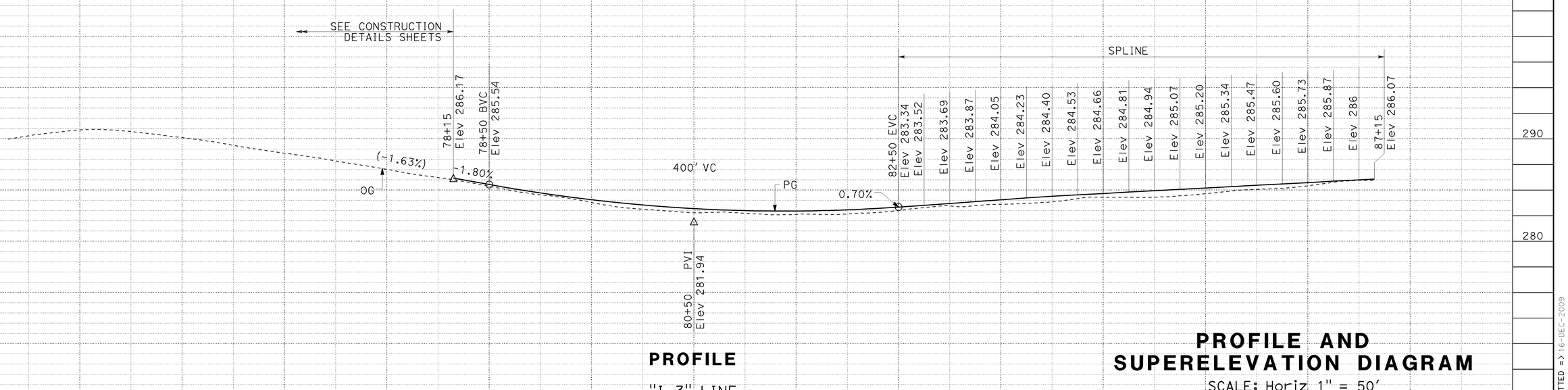

PROFILE

"I-3" LINE
NB YORBA LINDA Blvd ON-RAMP

PROFILE AND SUPERELEVATION DIAGRAM

SCALE: Horiz 1" = 50'
Vert 1" = 5'

PS-20

STATION	4	75	6	7	8	9	80	1	2	3	4	85	6	7	8	TOTAL
CY Exc																
CY Emb																

STATE OF CALIFORNIA - DEPARTMENT OF TRANSPORTATION
Caltrans

CONSULTANT FUNCTIONAL SUPERVISOR	CALCULATED-DESIGNED BY	CHECKED BY	REVISED BY	DATE REVISED
GONZALO PEÑA	SUSAN POMERLEAU	JOSUE VAGLIENTY		

LAST REVISION — DATE PLOTTED => 16-DEC-2009
TIME PLOTTED => 08:26

H:\pdata\10105878\Admin\submittals\2009-07-15 FINAL Electronic-Only Submittal SUBMITTAL\c0F031fb020.dgn
File: c0F031fb020.dgn 16-DEC-2009 08:26:00

BORDER LAST REVISED 4/11/2008 — RELATIVE BORDER SCALE IS IN INCHES 0 1 2 3 — USERNAME => trrene — DGN FILE => c0F031fb020.dgn — CU 12220 — EA 0F0311

NOTE:

FOR COMPLETE RIGHT OF WAY AND ACCURATE ACCESS DATA, SEE RIGHT OF WAY RECORD MAPS AT DISTRICT OFFICE.

No.	REMOVAL ITEMS	UNITS
1	REMOVE METAL BEAM GUARD RAILING	LF
2	REMOVE CHAIN LINK FENCE	LF
3	REMOVE RETAINING WALL	CY
4	REMOVE SOUND WALL	SQYD
5	REMOVE CONCRETE PAVEMENT	SQYD
6	REMOVE CONCRETE CURB	LF
7	REMOVE CONCRETE SIDEWALK	SQYD
8	REMOVE CONCRETE CROSS GUTTER	SQYD
9	REMOVE CONCRETE (MISCELLANEOUS)	SQYD
10	REMOVE ASPHALT CONCRETE DIKE	LF
11	REMOVE CRASH CUSHION (SAND FILLED)	EA
12	REMOVE GATE	EA
13	REMOVE AC SURFACING	SQFT
14	REMOVE ROCK BLANKET	CY
15	REMOVE CABLE RAILING	LF
16	REMOVE CONCRETE BARRIER (TYPE K)	LF
17	REMOVE CONCRETE BARRIER	LF

LEGEND: SHEET C-1 THROUGH C-12

- REMOVE CONCRETE PAVEMENT
- REMOVE CONCRETE (MISCELLANEOUS)
- REMOVE AC SURFACING
- REMOVE ROCK BLANKET
- (X) REMOVAL ITEM CODE

Dist	COUNTY	ROUTE	POST MILES TOTAL PROJECT	SHEET No.	TOTAL SHEETS
12	Ora	57	16.2/18.6	42	960

REGISTERED CIVIL ENGINEER — 12/3/09 DATE

12-14-09
PLANS APPROVAL DATE

JOSUE J. VAGLIENTY No. 70783 Exp. 6-30-11 CIVIL — REGISTERED PROFESSIONAL ENGINEER — STATE OF CALIFORNIA

THE STATE OF CALIFORNIA OR ITS OFFICERS OR AGENTS SHALL NOT BE RESPONSIBLE FOR THE ACCURACY OR COMPLETENESS OF SCANNED COPIES OF THIS PLAN SHEET.

RBF CONSULTING
14275 ALTON PKWY
IRVINE, CA 92618

OCTA
550 S. MAIN STREET
ORANGE, CA 92863

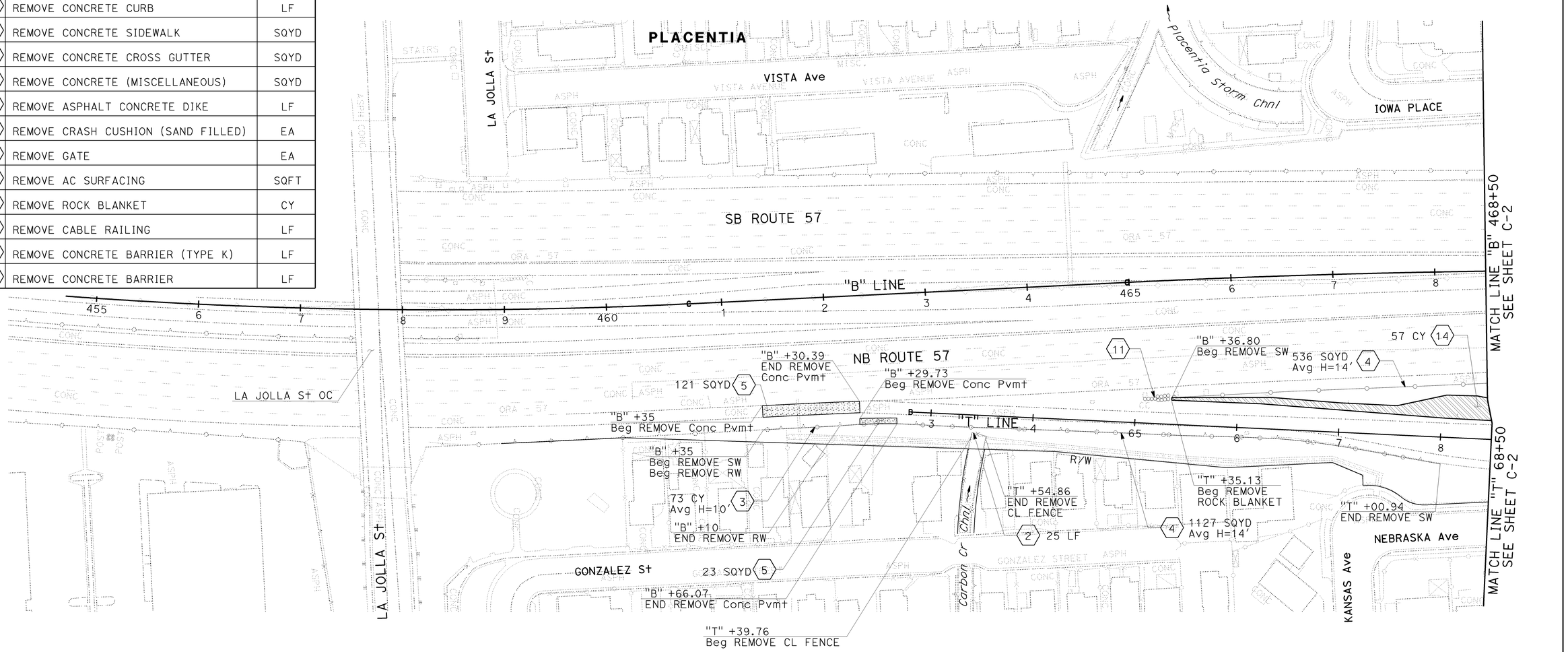

CONSTRUCTION DETAILS
(REMOVAL PLAN)

SCALE: 1" = 50'

C-1

REVISED BY	DATE REVISED
JJV	12/3/09

CALCULATED-DESIGNED BY: REBECCA KELCHER
CHECKED BY: JOSUE VAGLIENTY
CONSULTANT FUNCTIONAL SUPERVISOR: GONZALO PEÑA
STATE OF CALIFORNIA - DEPARTMENT OF TRANSPORTATION

LAST REVISION: 08-01-08
DATE PLOTTED => 16-DEC-2009
TIME PLOTTED => 06:26

16-DEC-2009 06:26
trrene
J:\PSESubmit\0F0311\c0F031ga001.dgn

BORDER LAST REVISED 4/11/2008

RELATIVE BORDER SCALE IS IN INCHES 0 1 2 3

USERNAME => trrene
DGN FILE => c0F031ga001.dgn

CU 12220

EA 0F0311

NOTE:

FOR COMPLETE RIGHT OF WAY AND ACCURATE ACCESS DATA, SEE RIGHT OF WAY RECORD MAPS AT DISTRICT OFFICE.

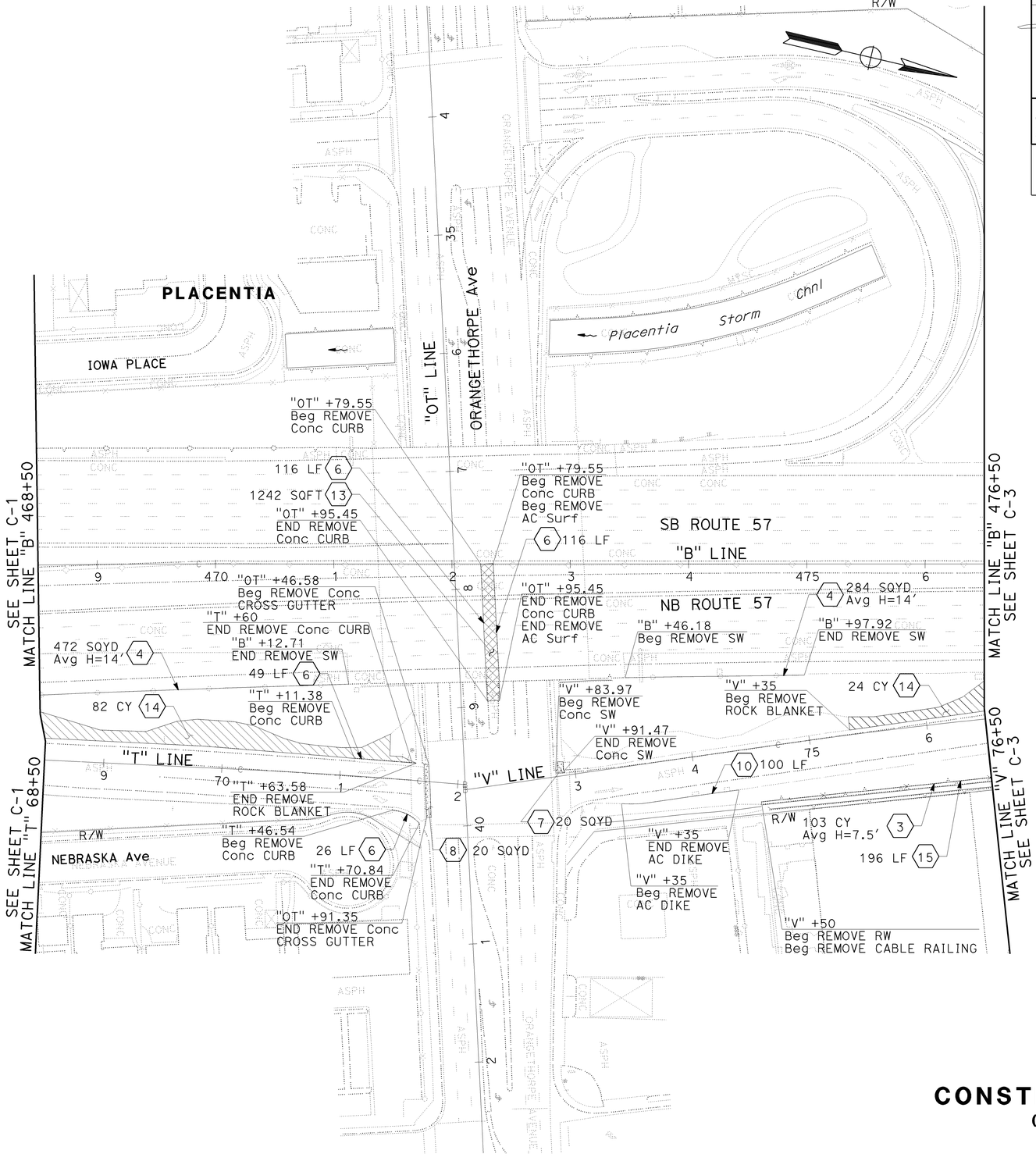

Dist	COUNTY	ROUTE	POST MILES TOTAL PROJECT	SHEET No.	TOTAL SHEETS
12	Ora	57	16.2/18.6	43	960

REGISTERED CIVIL ENGINEER — DATE 12/3/09

JOSUE J. VAGLIENTY No. 70783 Exp. 6-30-11 CIVIL — REGISTERED PROFESSIONAL ENGINEER — STATE OF CALIFORNIA

12-14-09
PLANS APPROVAL DATE

THE STATE OF CALIFORNIA OR ITS OFFICERS OR AGENTS SHALL NOT BE RESPONSIBLE FOR THE ACCURACY OR COMPLETENESS OF SCANNED COPIES OF THIS PLAN SHEET.

RBF CONSULTING
14275 ALTON PKWY
IRVINE, CA 92618

OCTA
550 S. MAIN STREET
ORANGE, CA 92863

CONSTRUCTION DETAILS
(REMOVAL PLAN)

SCALE: 1" = 50'

C-2

REVISED BY	DATE REVISED
JJV	12/3/09

CALCULATED-DESIGNED BY: REBECCA KELCHER
CHECKED BY: JOSUE VAGLIENTY
CONSULTANT FUNCTIONAL SUPERVISOR: GONZALO PEÑA
STATE OF CALIFORNIA - DEPARTMENT OF TRANSPORTATION
Caltrans

H:\pdata\10105878\CADD\TransPW\Div\Detail\c0F031ga002.dgn
trrene
16-DEC-2009 06:26

LAST REVISION 08-01-08
DATE PLOTTED => 16-DEC-2009
TIME PLOTTED => 06:26

BORDER LAST REVISED 4/11/2008
RELATIVE BORDER SCALE IS IN INCHES 0 1 2 3
USERNAME => trrene
DGN FILE => c0F031ga002.dgn
CU 12220
EA 0F0311

NOTE:

FOR COMPLETE RIGHT OF WAY AND ACCURATE ACCESS DATA, SEE RIGHT OF WAY RECORD MAPS AT DISTRICT OFFICE.

Dist	COUNTY	ROUTE	POST MILES TOTAL PROJECT	SHEET No.	TOTAL SHEETS
12	Ora	57	16.2/18.6	44	960

REGISTERED CIVIL ENGINEER — DATE 12/3/09

JOSUE J. VAGLIENTY No. 70783 Exp. 6-30-11 CIVIL — REGISTERED PROFESSIONAL ENGINEER — STATE OF CALIFORNIA

12-14-09
PLANS APPROVAL DATE

THE STATE OF CALIFORNIA OR ITS OFFICERS OR AGENTS SHALL NOT BE RESPONSIBLE FOR THE ACCURACY OR COMPLETENESS OF SCANNED COPIES OF THIS PLAN SHEET.

RBF CONSULTING
14275 ALTON PKWY
IRVINE, CA 92618

OCTA
550 S. MAIN STREET
ORANGE, CA 92863

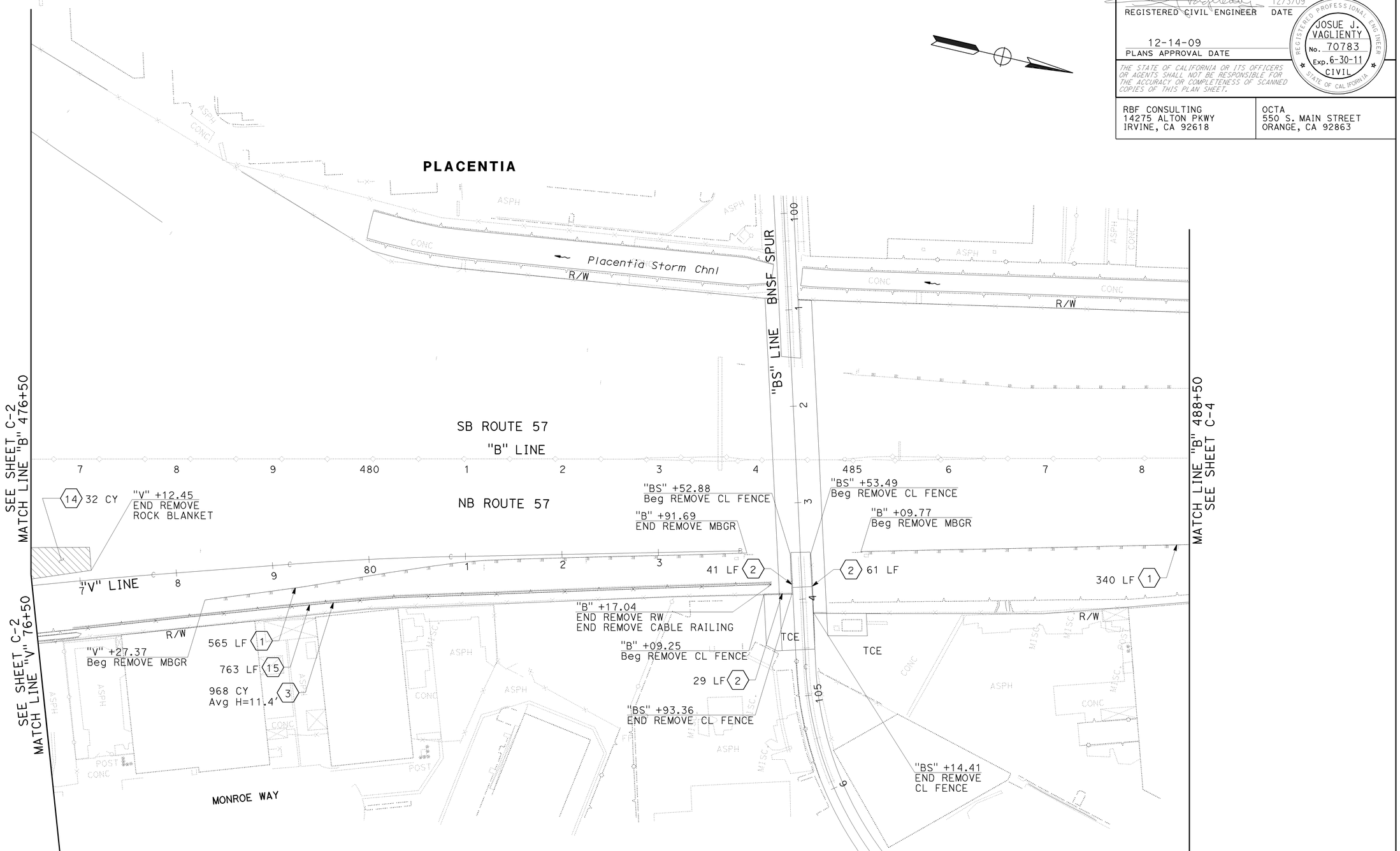

CONSTRUCTION DETAILS
(REMOVAL PLAN)

SCALE: 1" = 50'

C-3

REVISED BY	DATE REVISED
JJV	12/3/09

CALCULATED-DESIGNED BY: REBECCA KELCHER
CHECKED BY: JOSUE VAGLIENTY
CONSULTANT FUNCTIONAL SUPERVISOR: GONZALO PEÑA

STATE OF CALIFORNIA - DEPARTMENT OF TRANSPORTATION
Caltrans

H:\pdata\10105878\CADD\TransPW\Div\Detail\c0F031ga003.dgn
16-DEC-2009 06:26
trrene

LAST REVISION 08-01-08
DATE PLOTTED => 16-DEC-2009
TIME PLOTTED => 06:26

BORDER LAST REVISED 4/11/2008
RELATIVE BORDER SCALE IS IN INCHES 0 1 2 3
USERNAME => trrene
DGN FILE => c0F031ga003.dgn
CU 12220
EA 0F0311

NOTE:

FOR COMPLETE RIGHT OF WAY AND ACCURATE ACCESS DATA,
SEE RIGHT OF WAY RECORD MAPS AT DISTRICT OFFICE.

Dist	COUNTY	ROUTE	POST MILES TOTAL PROJECT	SHEET No.	TOTAL SHEETS
12	Ora	57	16.2/18.6	45	960

REGISTERED CIVIL ENGINEER — DATE 12/3/09

JOSUE J. VAGLIENTY No. 70783 Exp. 6-30-11 CIVIL — REGISTERED PROFESSIONAL ENGINEER — STATE OF CALIFORNIA

12-14-09
PLANS APPROVAL DATE

THE STATE OF CALIFORNIA OR ITS OFFICERS OR AGENTS SHALL NOT BE RESPONSIBLE FOR THE ACCURACY OR COMPLETENESS OF SCANNED COPIES OF THIS PLAN SHEET.

RBF CONSULTING
14275 ALTON PKWY
IRVINE, CA 92618

OCTA
550 S. MAIN STREET
ORANGE, CA 92863

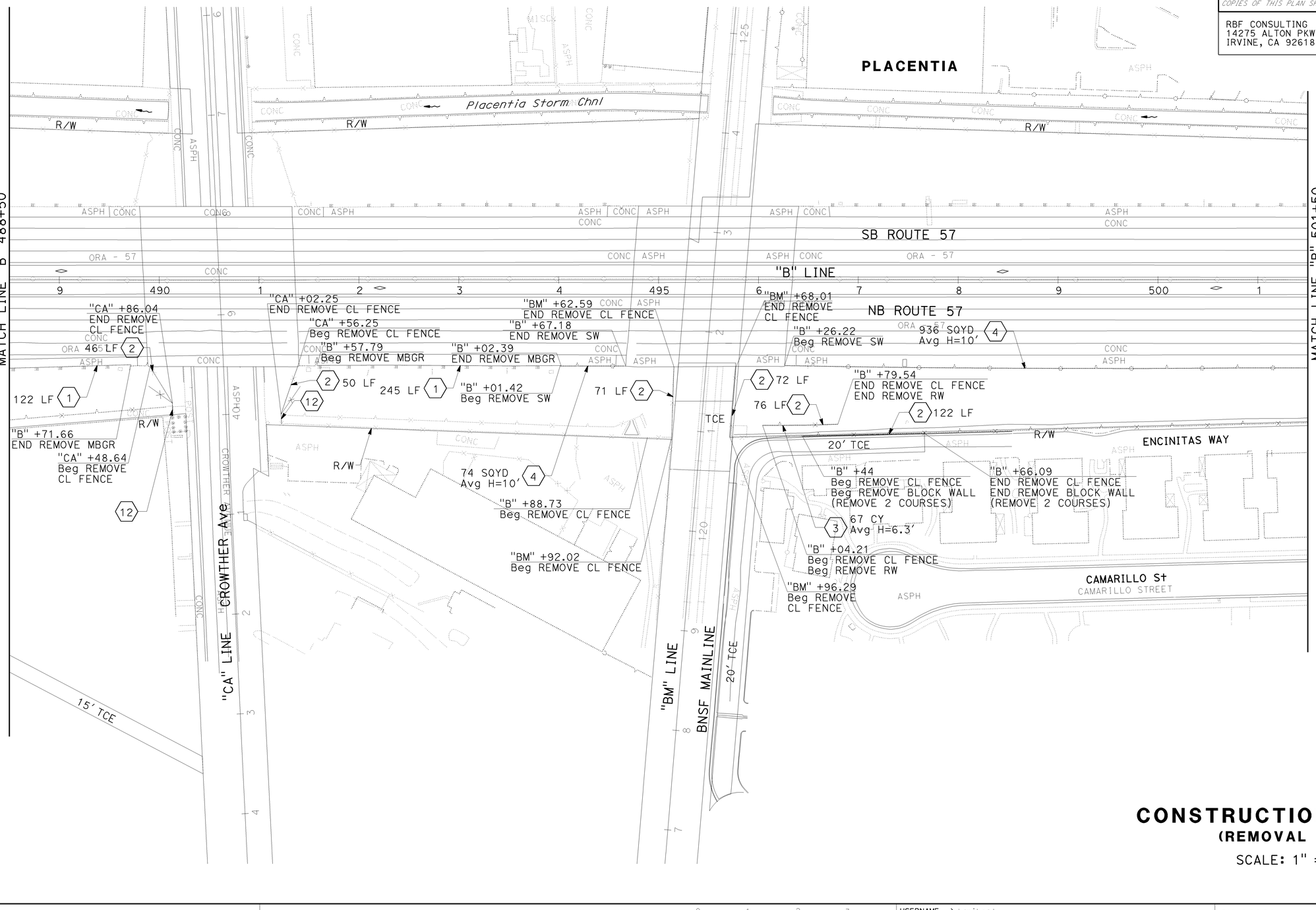

CONSTRUCTION DETAILS
(REMOVAL PLAN)

SCALE: 1" = 50'

C-4

CALCULATED-DESIGNED BY	CHECKED BY	REVISED BY	DATE REVISED
REBECCA KELCHER	JOSUE VAGLIENTY	JJV	12/3/09

CONSULTANT FUNCTIONAL SUPERVISOR: GONZALO PEÑA

STATE OF CALIFORNIA - DEPARTMENT OF TRANSPORTATION

Caltrans

H:\pdata\10105878\CADD\TransPW\Div\Detail\c0F031ga004.dgn
trmikesl
23-DEC-2009 13:59

LAST REVISION DATE PLOTTED => 23-DEC-2009
08-01-08 TIME PLOTTED => 13:59

BORDER LAST REVISED 4/11/2008

RELATIVE BORDER SCALE IS IN INCHES 0 1 2 3

USERNAME => trmikesl
DGN FILE => c0F031ga004.dgn

CU 12220

EA 0F0311

NOTE:

FOR COMPLETE RIGHT OF WAY AND ACCURATE ACCESS DATA, SEE RIGHT OF WAY RECORD MAPS AT DISTRICT OFFICE.

Dist	COUNTY	ROUTE	POST MILES TOTAL PROJECT	SHEET No.	TOTAL SHEETS
12	Ora	57	16.2/18.6	46	960

REGISTERED CIVIL ENGINEER — DATE 12/3/09

JOSUE J. VAGLIENTY No. 70783 Exp. 6-30-11 CIVIL — REGISTERED PROFESSIONAL ENGINEER — STATE OF CALIFORNIA

12-14-09
PLANS APPROVAL DATE

THE STATE OF CALIFORNIA OR ITS OFFICERS OR AGENTS SHALL NOT BE RESPONSIBLE FOR THE ACCURACY OR COMPLETENESS OF SCANNED COPIES OF THIS PLAN SHEET.

RBF CONSULTING
14275 ALTON PKWY
IRVINE, CA 92618

OCTA
550 S. MAIN STREET
ORANGE, CA 92863

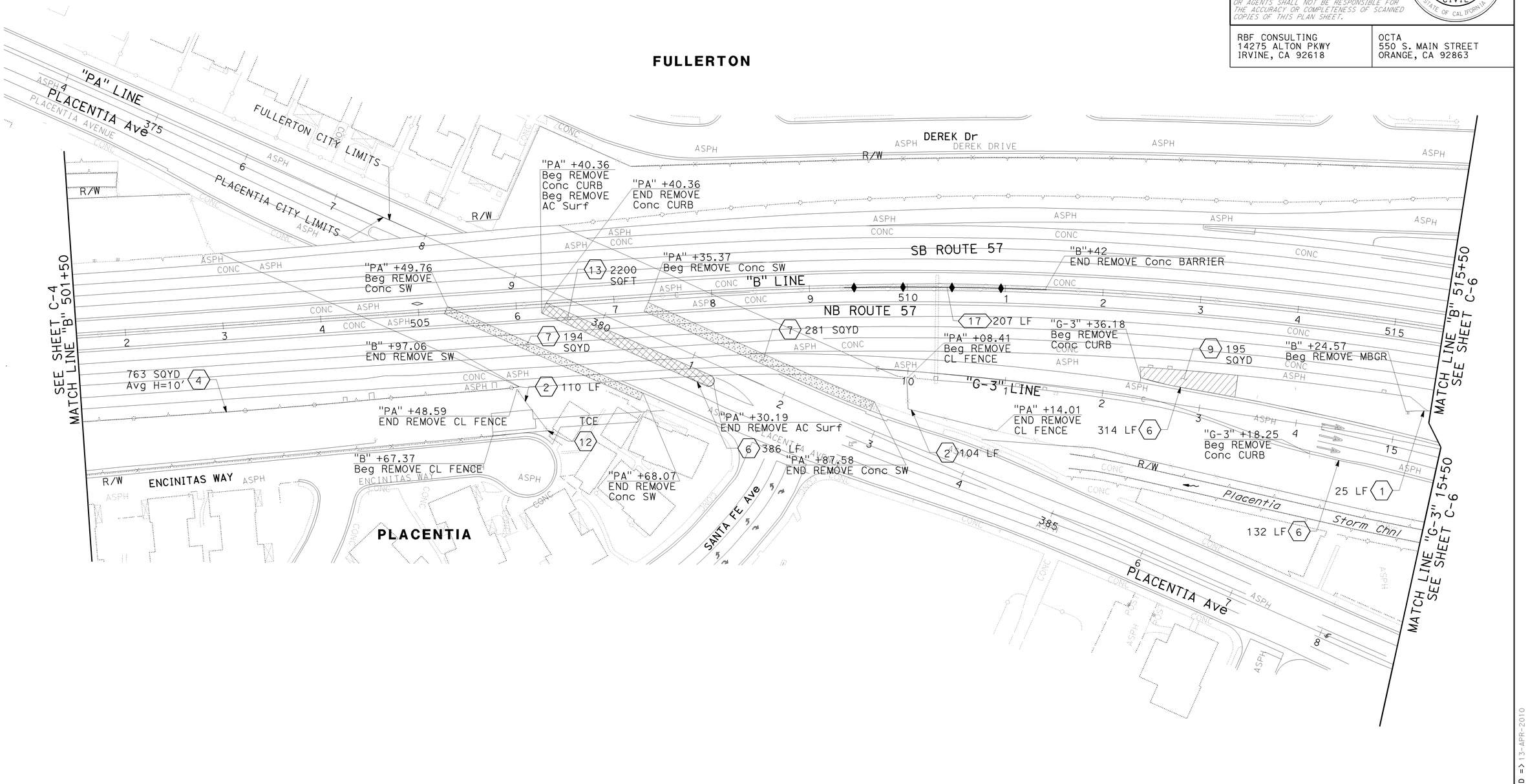

CONSTRUCTION DETAILS
(REMOVAL PLAN)

SCALE: 1" = 50'

C-5

REVISED BY	DATE REVISED
JUV	12/3/09

CALCULATED-DESIGNED BY: REBECCA KELCHER
CHECKED BY: JOSUE VAGLIENTY
CONSULTANT FUNCTIONAL SUPERVISOR: GONZALO PEÑA

STATE OF CALIFORNIA - DEPARTMENT OF TRANSPORTATION

Caltrans

H:\pdata\10105878\CADD\TransPW\Div\Detail\c0F031ga005.dgn 13-APR-2010 16:18 trstrk

LAST REVISION DATE PLOTTED => 13-APR-2010
TIME PLOTTED => 16:18

BORDER LAST REVISED 4/11/2008

RELATIVE BORDER SCALE IS IN INCHES 0 1 2 3

USERNAME => trstrk
DGN FILE => c0F031ga005.dgn

CU 12220

EA 0F0311

NOTE:

FOR COMPLETE RIGHT OF WAY AND ACCURATE ACCESS DATA,
SEE RIGHT OF WAY RECORD MAPS AT DISTRICT OFFICE.

Dist	COUNTY	ROUTE	POST MILES TOTAL PROJECT	SHEET No.	TOTAL SHEETS
12	Ora	57	16.2/18.6	47	960

12/3/09
REGISTERED CIVIL ENGINEER DATE

JOSUE J. VAGLIENTY No. 70783 Exp. 6-30-11 CIVIL — REGISTERED PROFESSIONAL ENGINEER — STATE OF CALIFORNIA

12-14-09
PLANS APPROVAL DATE

THE STATE OF CALIFORNIA OR ITS OFFICERS OR AGENTS SHALL NOT BE RESPONSIBLE FOR THE ACCURACY OR COMPLETENESS OF SCANNED COPIES OF THIS PLAN SHEET.

RBF CONSULTING
14275 ALTON PKWY
IRVINE, CA 92618

OCTA
550 S. MAIN STREET
ORANGE, CA 92863

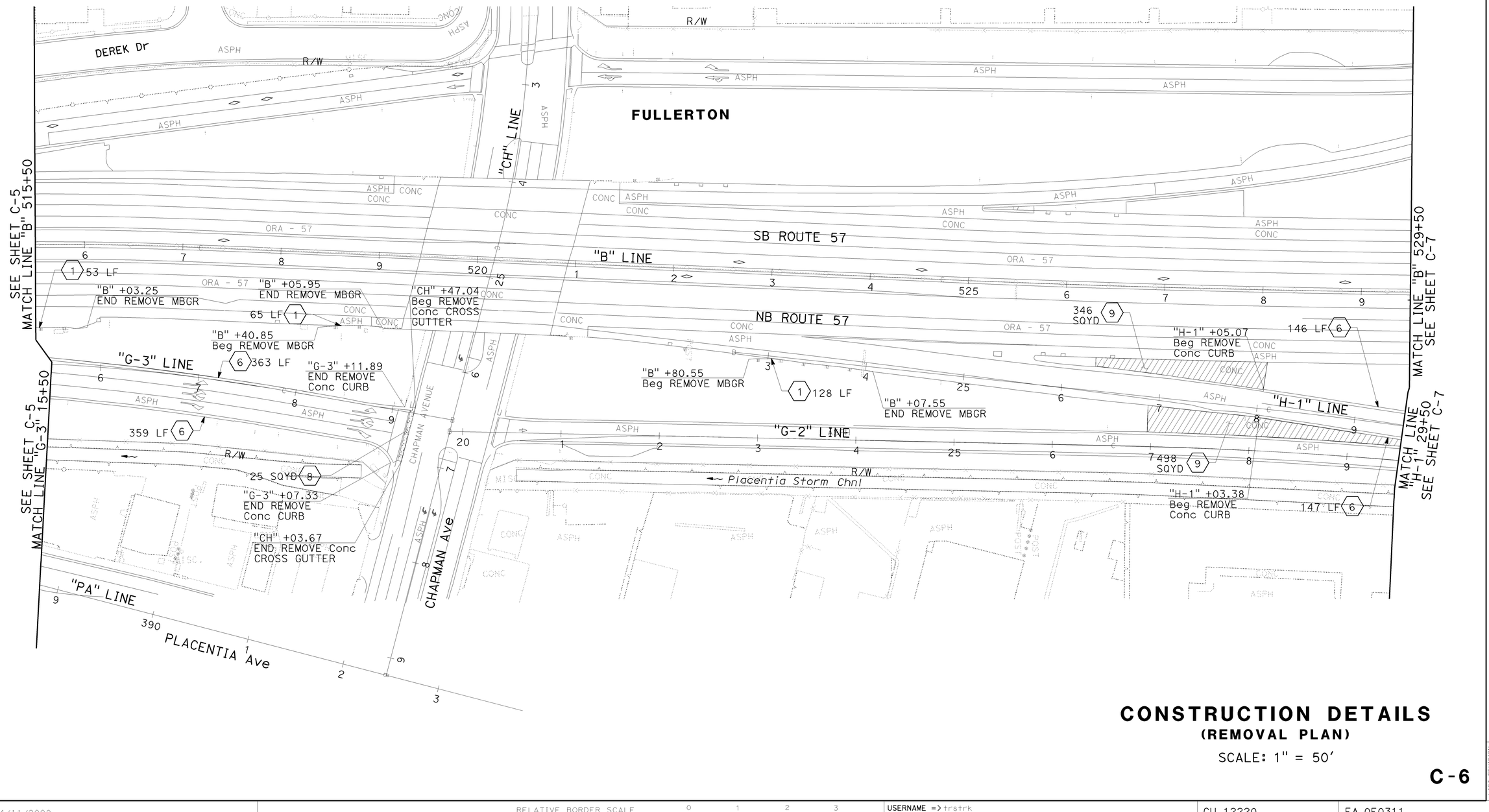

CONSTRUCTION DETAILS
(REMOVAL PLAN)

SCALE: 1" = 50'

C-6

STATE OF CALIFORNIA - DEPARTMENT OF TRANSPORTATION
Caltrans
CONSULTANT FUNCTIONAL SUPERVISOR: GONZALO PEÑA
CALCULATED-DESIGNED BY: REBECCA KELCHER
CHECKED BY: JOSUE VAGLIENTY
REVISED BY: JJV
DATE REVISED: 12/3/09

H:\pdata\10105878\CADD\TransPW\Div\Detail\c0F031ga006.dgn
13-APR-2010 16:18
trstrk

LAST REVISION | DATE PLOTTED => 13-APR-2010
08-01-08 | TIME PLOTTED => 16:18

BORDER LAST REVISED 4/11/2008
RELATIVE BORDER SCALE IS IN INCHES 0 1 2 3
USERNAME => trstrk
DGN FILE => c0F031ga006.dgn
CU 12220
EA 0F0311

NOTE:
FOR COMPLETE RIGHT OF WAY AND ACCURATE ACCESS DATA,
SEE RIGHT OF WAY RECORD MAPS AT DISTRICT OFFICE.

Dist	COUNTY	ROUTE	POST MILES TOTAL PROJECT	SHEET No.	TOTAL SHEETS
12	Ora	57	16.2/18.6	48	960

REGISTERED CIVIL ENGINEER — DATE 7/15/09

12-14-09
PLANS APPROVAL DATE

REGISTERED PROFESSIONAL ENGINEER
JOSUE J. VAGLIENTY
No. 70783
Exp. 6-30-11
CIVIL
STATE OF CALIFORNIA

THE STATE OF CALIFORNIA OR ITS OFFICERS OR AGENTS SHALL NOT BE RESPONSIBLE FOR THE ACCURACY OR COMPLETENESS OF SCANNED COPIES OF THIS PLAN SHEET.

RBF CONSULTING
14275 ALTON PKWY
IRVINE, CA 92618

OCTA
550 S. MAIN STREET
ORANGE, CA 92863

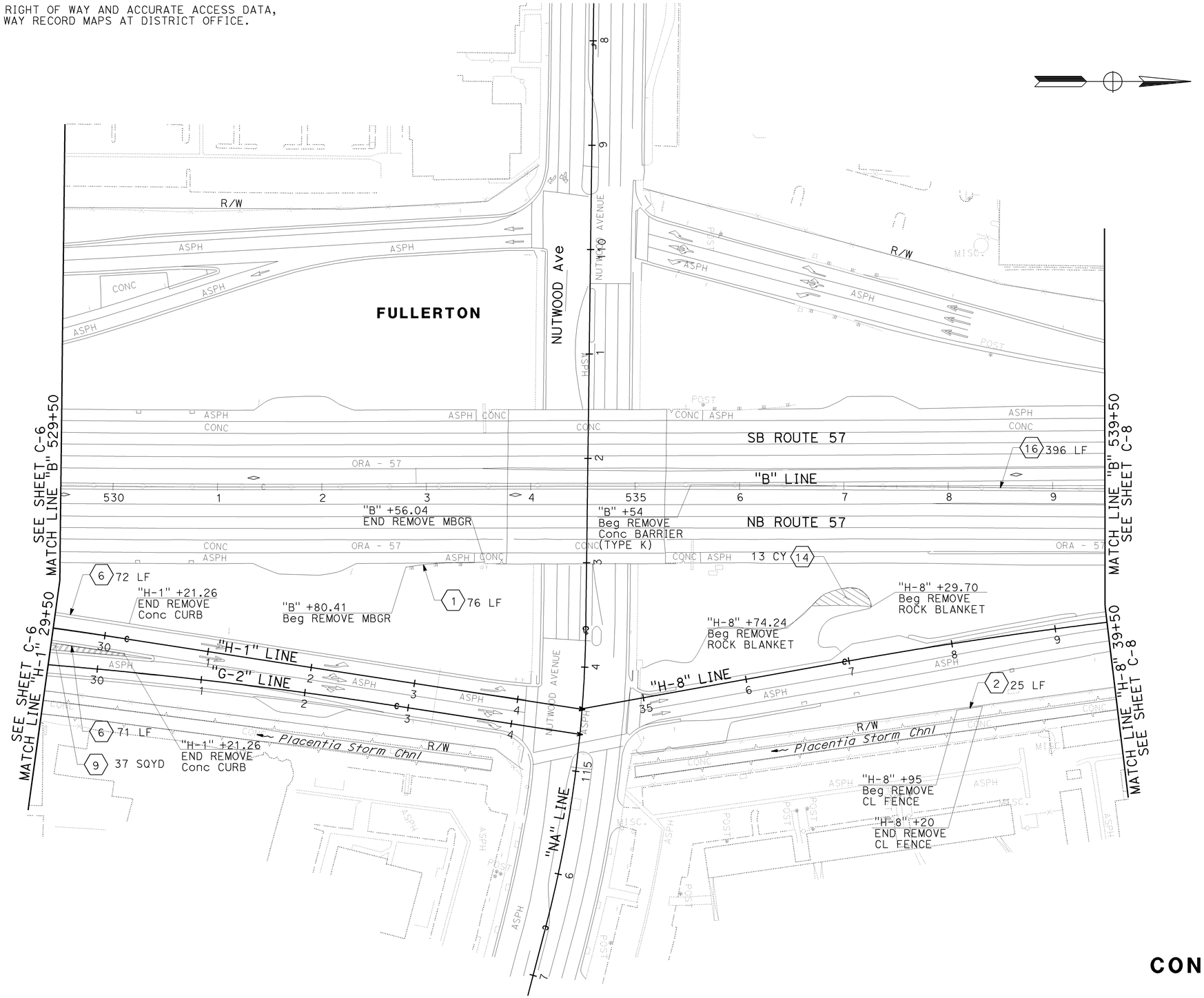

CONSTRUCTION DETAILS
(REMOVAL PLAN)

SCALE: 1" = 50'

C-7

H:\pdata\10105878\CADD\TransPW\Div\Detail\c0F031ga007.dgn 16-DEC-2009 10:56 trpierce

CHECKED BY	CALCULATED-DESIGNED BY	REVISED BY	DATE REVISED
JOSUE VAGLIENTY	REBECCA KELCHER		

STATE OF CALIFORNIA - DEPARTMENT OF TRANSPORTATION
CONSULTANT FUNCTIONAL SUPERVISOR: GONZALO PEÑA

LAST REVISION DATE PLOTTED => 16-DEC-2009
TIME PLOTTED => 10:56

BORDER LAST REVISED 4/11/2008 | RELATIVE BORDER SCALE IS IN INCHES 0 1 2 3 | USERNAME => trpierce | DGN FILE => c0F031ga007.dgn | CU 12220 | EA 0F0311

NOTE:
FOR COMPLETE RIGHT OF WAY AND ACCURATE ACCESS DATA,
SEE RIGHT OF WAY RECORD MAPS AT DISTRICT OFFICE.

Dist	COUNTY	ROUTE	POST MILES TOTAL PROJECT	SHEET No.	TOTAL SHEETS
12	Ora	57	16.2/18.6	49	960

REGISTERED CIVIL ENGINEER — DATE 7/15/09

12-14-09
PLANS APPROVAL DATE

REGISTERED PROFESSIONAL ENGINEER
JOSUE J. VAGLIENTY
No. 70783
Exp. 6-30-11
CIVIL
STATE OF CALIFORNIA

THE STATE OF CALIFORNIA OR ITS OFFICERS OR AGENTS SHALL NOT BE RESPONSIBLE FOR THE ACCURACY OR COMPLETENESS OF SCANNED COPIES OF THIS PLAN SHEET.

RBF CONSULTING
14275 ALTON PKWY
IRVINE, CA 92618

OCTA
550 S. MAIN STREET
ORANGE, CA 92863

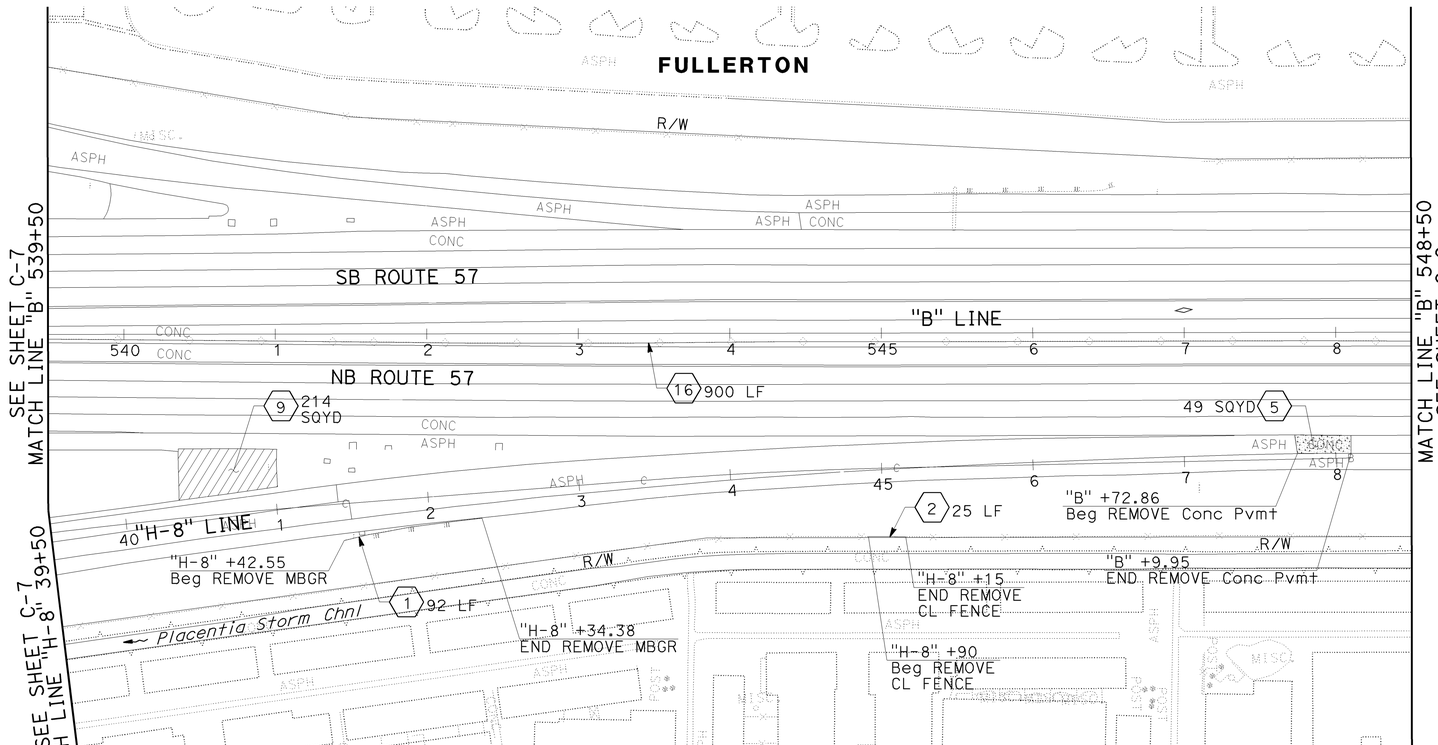

CONSTRUCTION DETAILS
(REMOVAL PLAN)

SCALE: 1" = 50'

C-8

STATE OF CALIFORNIA - DEPARTMENT OF TRANSPORTATION
CONSULTANT FUNCTIONAL SUPERVISOR: GONZALO PEÑA
CALCULATED-DESIGNED BY: REBECCA KELCHER
CHECKED BY: JOSUE VAGLIENTY
REVISED BY
DATE REVISED
trpierce 16-DEC-2009 10:56
H:\pdata\10105878\CADD\TransPW\Div\Detail\c0F031ga008.dgn

LAST REVISION DATE PLOTTED => 16-DEC-2009
TIME PLOTTED => 10:56
08-01-08

BORDER LAST REVISED 4/11/2008
RELATIVE BORDER SCALE IS IN INCHES 0 1 2 3
USERNAME => trpierce
DGN FILE => c0F031ga008.dgn
CU 12220
EA 0F0311

NOTE:

FOR COMPLETE RIGHT OF WAY AND ACCURATE ACCESS DATA,
SEE RIGHT OF WAY RECORD MAPS AT DISTRICT OFFICE.

Dist	COUNTY	ROUTE	POST MILES TOTAL PROJECT	SHEET No.	TOTAL SHEETS
12	Ora	57	16.2/18.6	50	960

REGISTERED CIVIL ENGINEER — DATE 7/15/09

JOSUE J. VAGLIENTY No. 70783 Exp. 6-30-11 CIVIL — REGISTERED PROFESSIONAL ENGINEER — STATE OF CALIFORNIA

12-14-09
PLANS APPROVAL DATE

THE STATE OF CALIFORNIA OR ITS OFFICERS OR AGENTS SHALL NOT BE RESPONSIBLE FOR THE ACCURACY OR COMPLETENESS OF SCANNED COPIES OF THIS PLAN SHEET.

RBF CONSULTING
14275 ALTON PKWY
IRVINE, CA 92618

OCTA
550 S. MAIN STREET
ORANGE, CA 92863

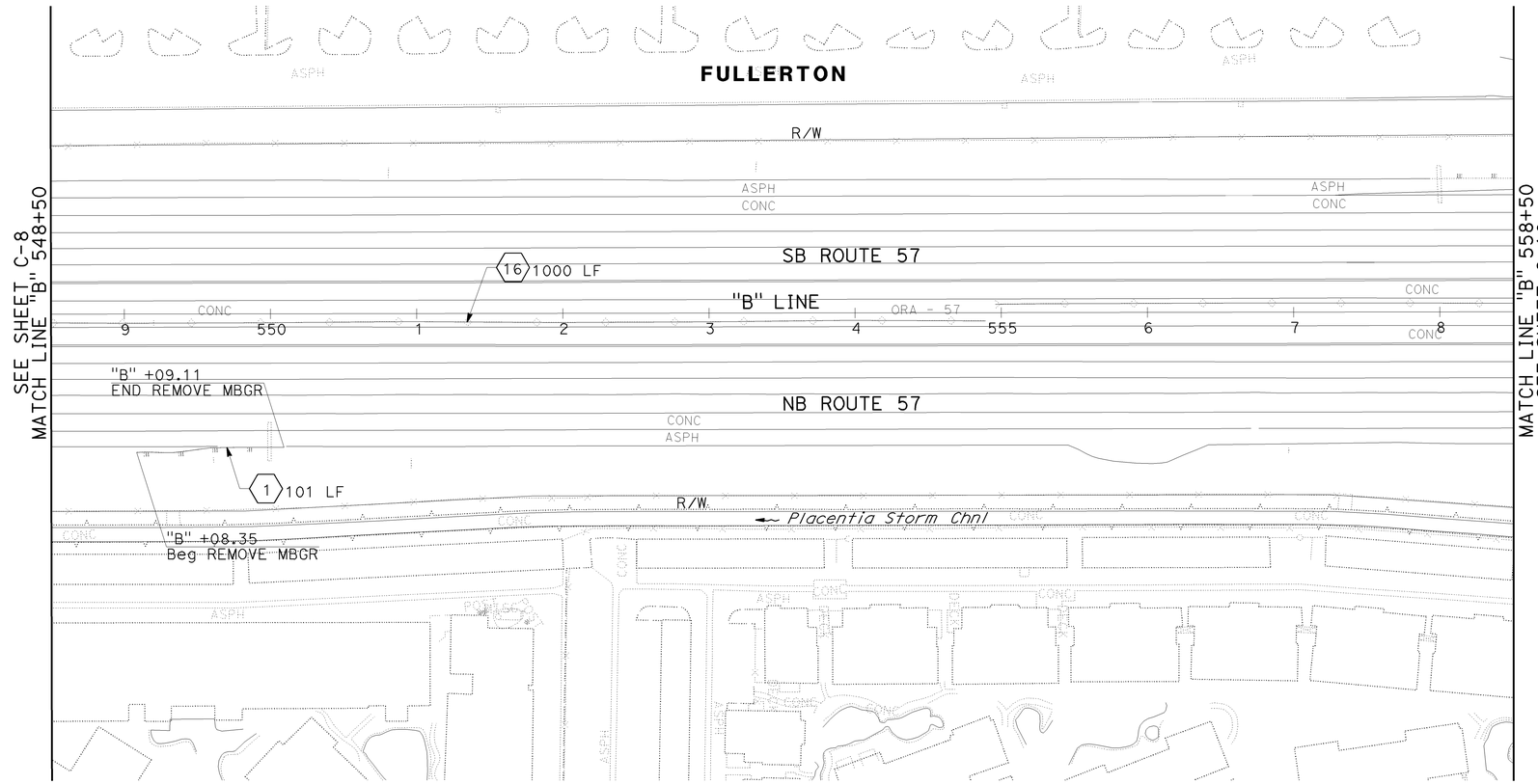

CONSTRUCTION DETAILS
(REMOVAL PLAN)

SCALE: 1" = 50'

C-9

NOTE:
FOR COMPLETE RIGHT OF WAY AND ACCURATE ACCESS DATA, SEE RIGHT OF WAY RECORD MAPS AT DISTRICT OFFICE.

Dist	COUNTY	ROUTE	POST MILES TOTAL PROJECT	SHEET No.	TOTAL SHEETS
12	Ora	57	16.2/18.6	51	960

REGISTERED CIVIL ENGINEER 7/15/09 DATE

12-14-09
PLANS APPROVAL DATE

REGISTERED PROFESSIONAL ENGINEER JOSUE J. VAGLIENTY No. 70783 Exp. 6-30-11 CIVIL STATE OF CALIFORNIA

THE STATE OF CALIFORNIA OR ITS OFFICERS OR AGENTS SHALL NOT BE RESPONSIBLE FOR THE ACCURACY OR COMPLETENESS OF SCANNED COPIES OF THIS PLAN SHEET.

RBF CONSULTING
14275 ALTON PKWY
IRVINE, CA 92618

OCTA
550 S. MAIN STREET
ORANGE, CA 92863

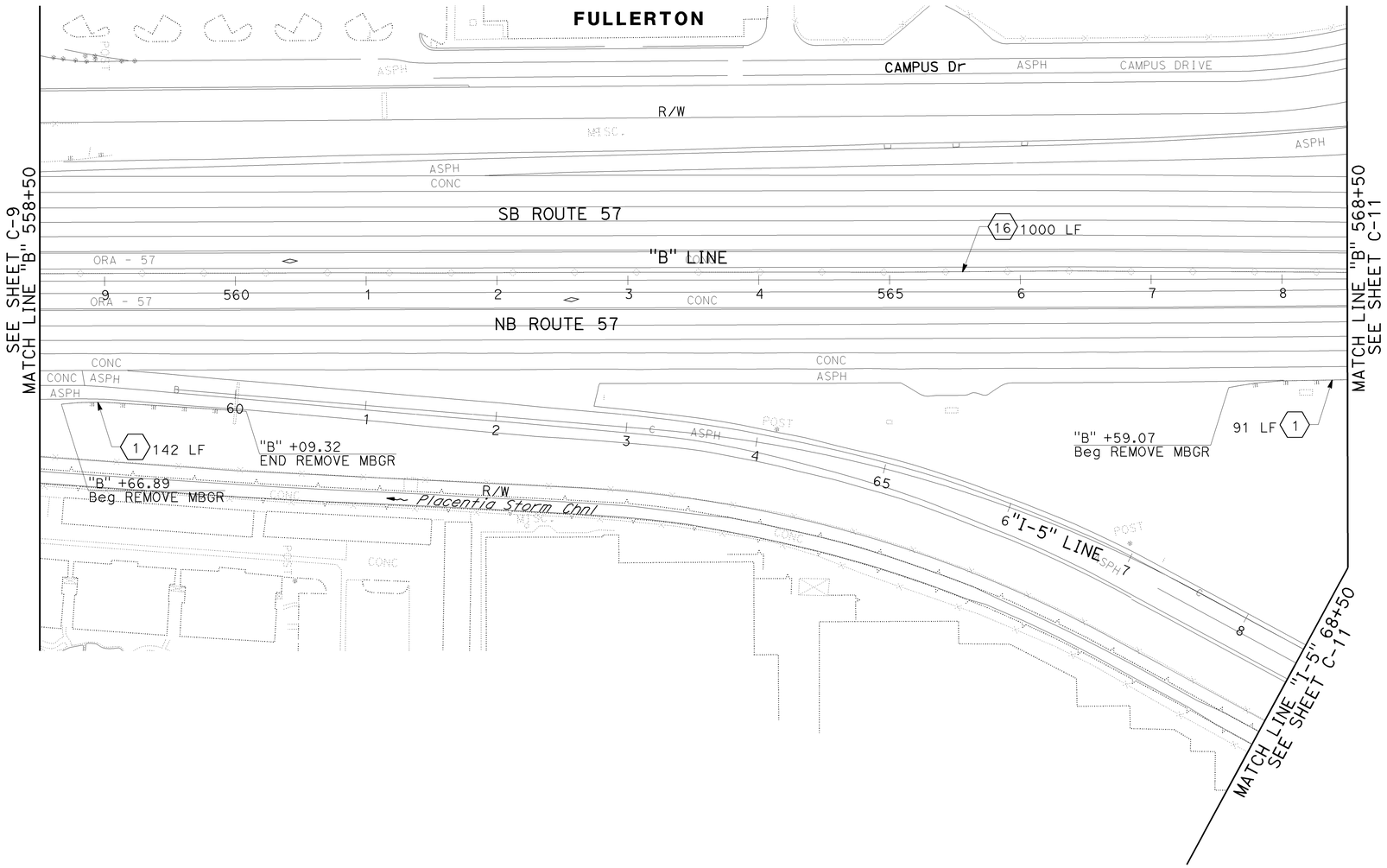

CONSTRUCTION DETAILS
(REMOVAL PLAN)

SCALE: 1" = 50'

C-10

H:\pdata\10105878\CADD\TransPW\Div\Detail\c0F031ga010.dgn
STATE OF CALIFORNIA - DEPARTMENT OF TRANSPORTATION
Caltrans
CONSULTANT FUNCTIONAL SUPERVISOR: GONZALO PEÑA
CALCULATED-DESIGNED BY: REBECCA KELCHER
CHECKED BY: JOSUE VAGLIENTY
REVISED BY
DATE REVISED
trpierce 16-DEC-2009 10:57

LAST REVISION 08-01-08
DATE PLOTTED => 16-DEC-2009
TIME PLOTTED => 10:57

NOTE:
FOR COMPLETE RIGHT OF WAY AND ACCURATE ACCESS DATA,
SEE RIGHT OF WAY RECORD MAPS AT DISTRICT OFFICE.

Dist	COUNTY	ROUTE	POST MILES TOTAL PROJECT	SHEET No.	TOTAL SHEETS
12	Ora	57	16.2/18.6	52	960

12-3-09
REGISTERED CIVIL ENGINEER DATE

JOSUE J. VAGLIENTY
No. 70783
Exp. 6-30-11
CIVIL
REGISTERED PROFESSIONAL ENGINEER
STATE OF CALIFORNIA

12-14-09
PLANS APPROVAL DATE

THE STATE OF CALIFORNIA OR ITS OFFICERS OR AGENTS SHALL NOT BE RESPONSIBLE FOR THE ACCURACY OR COMPLETENESS OF SCANNED COPIES OF THIS PLAN SHEET.

RBF CONSULTING
14275 ALTON PKWY
IRVINE, CA 92618

OCTA
550 S. MAIN STREET
ORANGE, CA 92863

SEE SHEET C-10
MATCH LINE "B" 568+50

"B" +83.62
END REMOVE MBGR
16 314 LF

"B" +64
END REMOVE
Conc BARRIER
(TYPE K)

"B" +00
Beg REMOVE
Conc Pvmt

"B" +35.61
END REMOVE
Conc Pvmt

6 64 LF

"B" +00.35
END REMOVE
Conc CURB

69 SQYD 5

1 34 LF

2 "I-4" LINE

6 72 LF

"B" +37.09
Beg REMOVE
Conc CURB

"I-4" +33.30
Beg REMOVE
Conc CURB

"I-4" +28
Beg REMOVE Conc SW
Beg REMOVE Conc CURB

43 SQYD 7

52 LF 6

"I-4" +79.74
END REMOVE Conc SW
END REMOVE Conc CURB

97 LF 6

"I-4" +55.59
END REMOVE Conc CURB

"I-4" +59.89
Beg REMOVE Conc SW
Beg REMOVE Conc CURB

6 4 LF

"YL" +80.45
END REMOVE
Conc CURB

7 47 SQYD

"YL" +45.66
END REMOVE
Conc SW

SB ROUTE 57

"B" LINE

NB ROUTE 57

SEE SHEET C-12
MATCH LINE "B" 578+50

SEE SHEET C-10
MATCH LINE "I-5" 68+50

"I-5" LINE

Placentia Storm Chnl

"YL" +94.67
Beg REMOVE
Conc SW

26 SQYD 7

"YL" +34.00
END REMOVE
Conc SW

YORBA LINDA Blvd

"I-3" LINE

"I-3" +72.87
END REMOVE Conc SW
END REMOVE Conc CURB
END REMOVE AC Surf

13 28 SQFT

7 14 SQYD

"I-3" +59.90
Beg REMOVE AC Surf

"I-3" +51.16
END REMOVE Conc SW

7 11 SQYD

"I-3" +37.66
Beg REMOVE Conc SW

6 30 LF

"I-3" +43.90
Beg REMOVE Conc SW
Beg REMOVE Conc CURB

6 7 LF

"YL" +76.18
Beg REMOVE
Conc SW

6 SQYD 7

"YL" +84.51
END REMOVE
Conc SW

"YL" +71.69
END REMOVE Conc CURB

"YL" LINE

CONSTRUCTION DETAILS
(REMOVAL PLAN)

SCALE: 1" = 50'

C-11

REVISED BY	DATE REVISED
JJV	12/3/09

CALCULATED-DESIGNED BY	CHECKED BY
REBECCA KELCHER	JOSUE VAGLIENTY

CONSULTANT FUNCTIONAL SUPERVISOR: GONZALO PEÑA

STATE OF CALIFORNIA - DEPARTMENT OF TRANSPORTATION
Caltrans

H:\pdata\10105878\CADD\TransPW\Div\Detail\c0F031ga011.dgn
trpierce 16-DEC-2009 10:57

BORDER LAST REVISED 4/11/2008

RELATIVE BORDER SCALE IS IN INCHES 0 1 2 3

USERNAME => trpierce
DGN FILE => c0F031ga011.dgn

CU 12220

EA 0F0311

LAST REVISION 08-01-08
DATE PLOTTED => 16-DEC-2009
TIME PLOTTED => 10:57

NOTE:

FOR COMPLETE RIGHT OF WAY AND ACCURATE ACCESS DATA,
SEE RIGHT OF WAY RECORD MAPS AT DISTRICT OFFICE.

Dist	COUNTY	ROUTE	POST MILES TOTAL PROJECT	SHEET No.	TOTAL SHEETS
12	Ora	57	16.2/18.6	53	960

REGISTERED CIVIL ENGINEER — DATE 7/15/09

JOSUE J. VAGLIENTY No. 70783 Exp. 6-30-11 CIVIL — REGISTERED PROFESSIONAL ENGINEER — STATE OF CALIFORNIA

12-14-09
PLANS APPROVAL DATE

THE STATE OF CALIFORNIA OR ITS OFFICERS OR AGENTS SHALL NOT BE RESPONSIBLE FOR THE ACCURACY OR COMPLETENESS OF SCANNED COPIES OF THIS PLAN SHEET.

RBF CONSULTING
14275 ALTON PKWY
IRVINE, CA 92618

OCTA
550 S. MAIN STREET
ORANGE, CA 92863

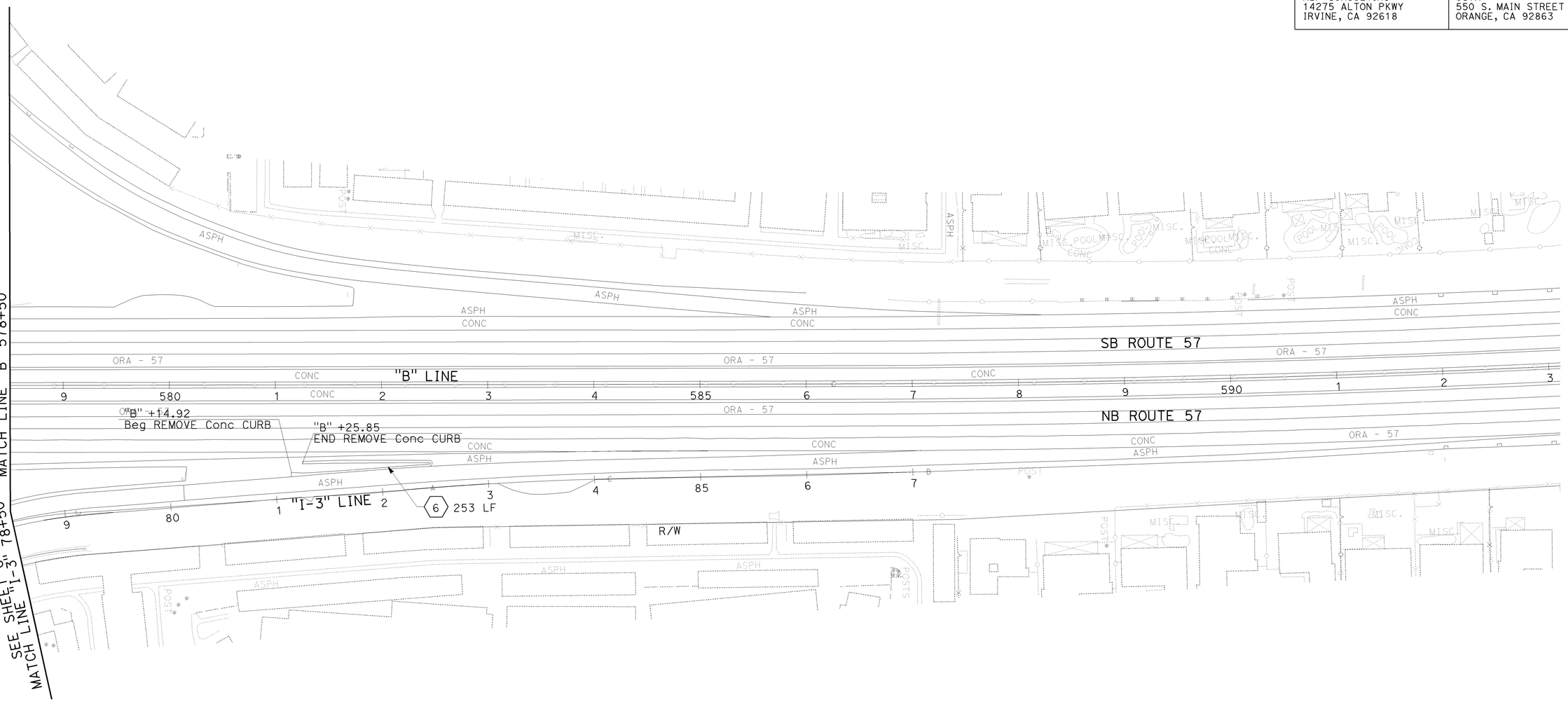

CONSTRUCTION DETAILS
(REMOVAL PLAN)

SCALE: 1" = 50'

C-12

STATE OF CALIFORNIA - DEPARTMENT OF TRANSPORTATION | CONSULTANT FUNCTIONAL SUPERVISOR: GONZALO PEÑA | CALCULATED-DESIGNED BY: REBECCA KELCHER | CHECKED BY: JOSUE VAGLIENTY | REVISED BY | DATE REVISED

H:\pdata\10105878\CADD\TransPW\Div\Detail\c0F031ga012.dgn 16-DEC-2009 10:57 trpierce

LAST REVISION: DATE PLOTTED => 16-DEC-2009 | TIME PLOTTED => 10:57 | 08-01-08

BORDER LAST REVISED 4/11/2008 | RELATIVE BORDER SCALE IS IN INCHES 0 1 2 3 | USERNAME => trpierce | DGN FILE => c0F031ga012.dgn | CU 12220 | EA 0F0311

Dist	COUNTY	ROUTE	POST MILES TOTAL PROJECT	SHEET No.	TOTAL SHEETS
12	Ora	57	16.2/18.6	54	960

12/3/09
REGISTERED CIVIL ENGINEER DATE

12-14-09
PLANS APPROVAL DATE

REGISTERED PROFESSIONAL ENGINEER
JOSUE J. VAGLIENTY
No. 70783
Exp. 6-30-11
CIVIL
STATE OF CALIFORNIA

THE STATE OF CALIFORNIA OR ITS OFFICERS OR AGENTS SHALL NOT BE RESPONSIBLE FOR THE ACCURACY OR COMPLETENESS OF SCANNED COPIES OF THIS PLAN SHEET.

RBF CONSULTING
14275 ALTON PKWY
IRVINE, CA 92618

OCTA
550 S. MAIN STREET
ORANGE, CA 92863

NOTE:

1. FOR COMPLETE RIGHT OF WAY AND ACCURATE ACCESS DATA, SEE RIGHT OF WAY MAPS AT DISTRICT OFFICE.
2. NO EXISTING AERIALLY DEPOSITED LEAD BETWEEN Sta "B" 461+35 AND Sta "B" 501+00.

LEGEND: SHEET C-13 THROUGH C-34

- AREA OF ROADWAY EXCAVATION WITH AERIALLY DEPOSITED LEAD (TYPE Y-1) TO A DEPTH OF 4′
- AREA OF ROADWAY EXCAVATION WITH AERIALLY DEPOSITED LEAD (TYPE Y-1) TO A DEPTH OF 0.5′
- AREA OF STRUCTURE EXCAVATION WITH AERIALLY DEPOSITED LEAD (TYPE Y-1) TO A DEPTH OF 4′
- AREA OF STRUCTURE EXCAVATION WITH AERIALLY DEPOSITED LEAD (TYPE Y-1) TO A DEPTH OF 0.5′
- LIMIT OF PLACEMENT FOR MATERIAL WITH AERIALLY DEPOSITED LEAD (TYPE Y-1) (SEE C-34 FOR DETAILS)

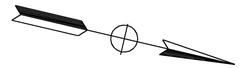

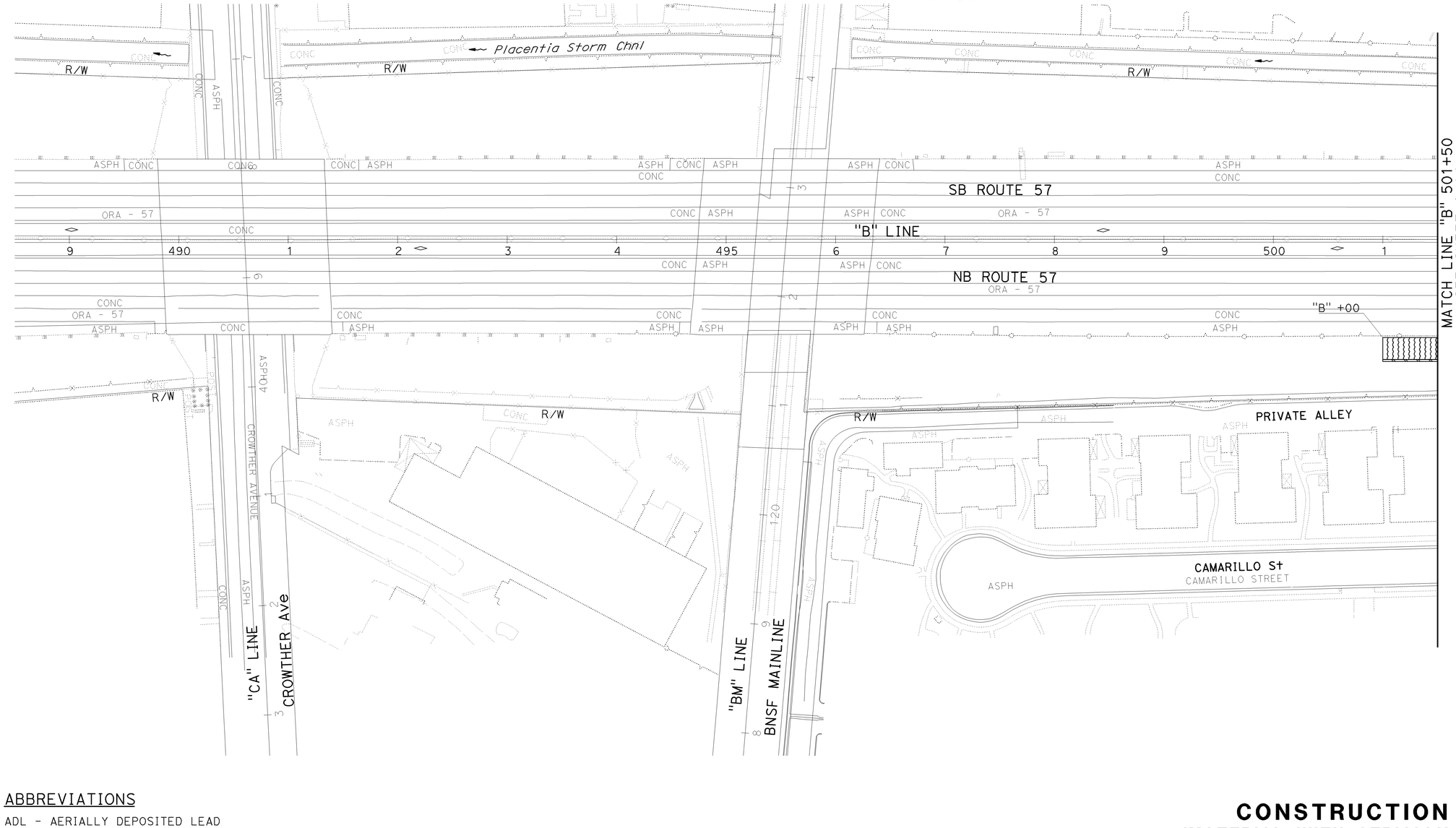

ABBREVIATIONS

ADL - AERIALLY DEPOSITED LEAD

CONSTRUCTION DETAILS
(MATERIAL WITH AERIALLY DEPOSITED LEAD) (EXISTING)

SCALE: 1" = 50′

C-13

THIS PLAN ACCURATE FOR ADL WORK ONLY

JJV	12/3/09
REVISED BY	DATE REVISED
REBECCA KELCHER	JOSUE VAGLIENTY
CALCULATED-DESIGNED BY	CHECKED BY
GONZALO PEÑA	
CONSULTANT FUNCTIONAL SUPERVISOR	

STATE OF CALIFORNIA - DEPARTMENT OF TRANSPORTATION
Caltrans

LAST REVISION 08-01-08 | DATE PLOTTED => 16-DEC-2009 | TIME PLOTTED => 10:57

H:\pdata\10105878\CADD\TransPW\Div\Detail\c0F031ga013.dgn
16-DEC-2009 10:57
trpierce

BORDER LAST REVISED 4/11/2008

RELATIVE BORDER SCALE IS IN INCHES 0 1 2 3

USERNAME => trpierce
DGN FILE => c0F031ga013.dgn

CU 12220

EA 0F0311

NOTE:
FOR COMPLETE RIGHT OF WAY AND ACCURATE ACCESS DATA,
SEE RIGHT OF WAY RECORD MAPS AT DISTRICT OFFICE.

Dist	COUNTY	ROUTE	POST MILES TOTAL PROJECT	SHEET No.	TOTAL SHEETS
12	Ora	57	16.2/18.6	55	960

REGISTERED CIVIL ENGINEER — DATE 7/15/09

JOSUE J. VAGLIENTY
No. 70783
Exp. 6-30-11
CIVIL
REGISTERED PROFESSIONAL ENGINEER
STATE OF CALIFORNIA

12-14-09
PLANS APPROVAL DATE

THE STATE OF CALIFORNIA OR ITS OFFICERS OR AGENTS SHALL NOT BE RESPONSIBLE FOR THE ACCURACY OR COMPLETENESS OF SCANNED COPIES OF THIS PLAN SHEET.

RBF CONSULTING
14275 ALTON PKWY
IRVINE, CA 92618

OCTA
550 S. MAIN STREET
ORANGE, CA 92863

CONSTRUCTION DETAILS
(MATERIAL WITH AERIALLY DEPOSITED LEAD) (EXISTING)

SCALE: 1" = 50'

C-14

THIS PLAN ACCURATE FOR ADL WORK ONLY.

LAST REVISION — DATE PLOTTED => 16-DEC-2009
TIME PLOTTED => 10:57
08-01-08

STATE OF CALIFORNIA - DEPARTMENT OF TRANSPORTATION
Caltrans
CONSULTANT FUNCTIONAL SUPERVISOR: GONZALO PEÑA
CALCULATED-DESIGNED BY: REBECCA KELCHER
CHECKED BY: JOSUE VAGLIENTY
REVISED BY
DATE REVISED

H:\pdata\10105878\CADD\TransPW\Div\Detail\c0F031ga014.dgn
16-DEC-2009 10:57
trpierce

BORDER LAST REVISED 4/11/2008
RELATIVE BORDER SCALE IS IN INCHES 0 1 2 3
USERNAME => trpierce
DGN FILE => c0F031ga014.dgn
CU 12220
EA 0F0311

NOTE:
FOR COMPLETE RIGHT OF WAY AND ACCURATE ACCESS DATA,
SEE RIGHT OF WAY RECORD MAPS AT DISTRICT OFFICE.

Dist	COUNTY	ROUTE	POST MILES TOTAL PROJECT	SHEET No.	TOTAL SHEETS
12	Ora	57	16.2/18.6	56	960

REGISTERED CIVIL ENGINEER — DATE 7/15/09

JOSUE J. VAGLIENTY No. 70783 Exp. 6-30-11 CIVIL — REGISTERED PROFESSIONAL ENGINEER — STATE OF CALIFORNIA

12-14-09
PLANS APPROVAL DATE

THE STATE OF CALIFORNIA OR ITS OFFICERS OR AGENTS SHALL NOT BE RESPONSIBLE FOR THE ACCURACY OR COMPLETENESS OF SCANNED COPIES OF THIS PLAN SHEET.

RBF CONSULTING
14275 ALTON PKWY
IRVINE, CA 92618

OCTA
550 S. MAIN STREET
ORANGE, CA 92863

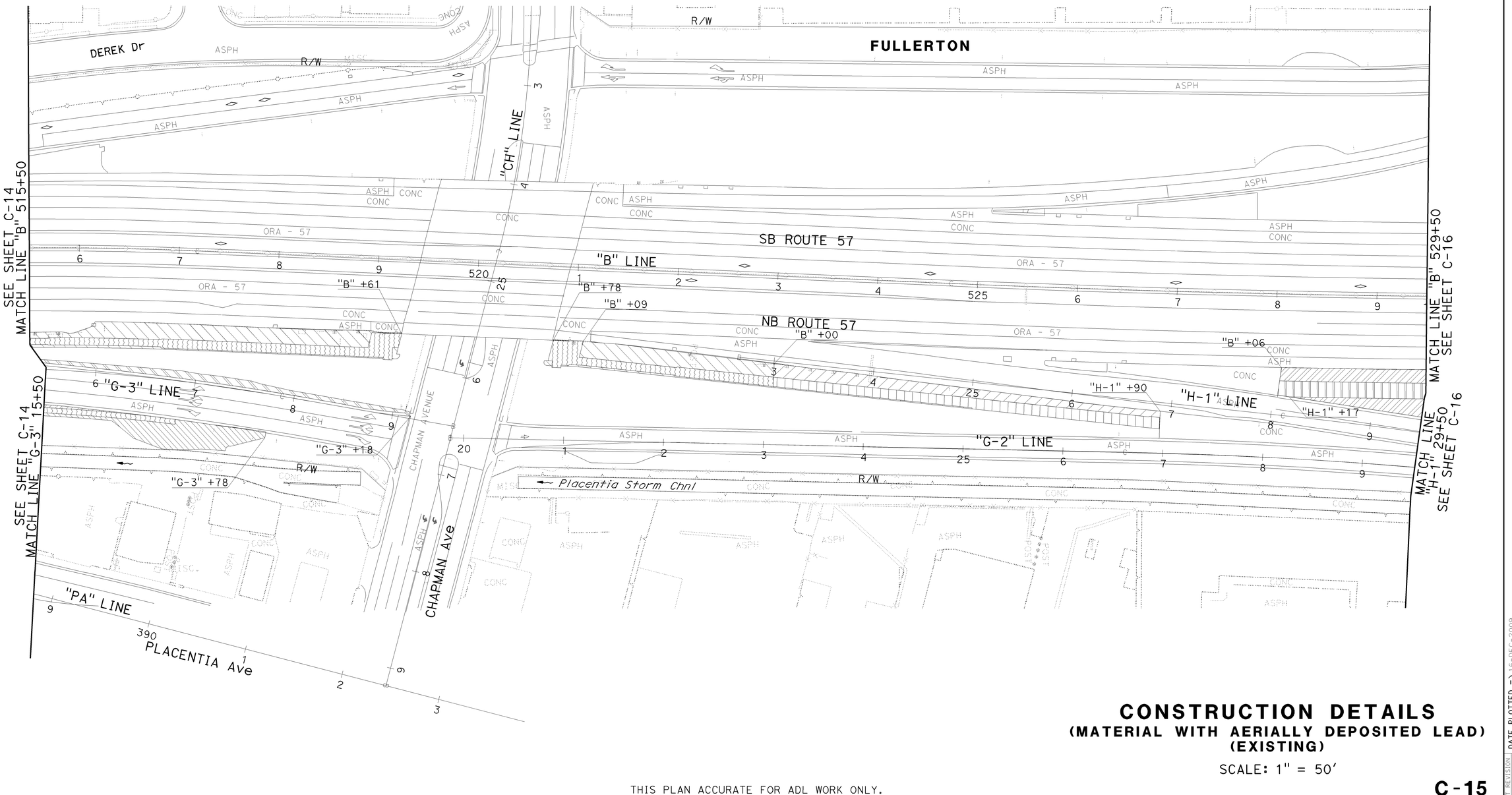

CONSTRUCTION DETAILS
(MATERIAL WITH AERIALLY DEPOSITED LEAD) (EXISTING)

SCALE: 1" = 50'

THIS PLAN ACCURATE FOR ADL WORK ONLY.

C-15

REVISED BY	DATE REVISED

CALCULATED-DESIGNED BY: REBECCA KELCHER
CHECKED BY: JOSUE VAGLIENTY
CONSULTANT FUNCTIONAL SUPERVISOR: GONZALO PEÑA
STATE OF CALIFORNIA - DEPARTMENT OF TRANSPORTATION
Caltrans

trpierce 16-DEC-2009 10:57
H:\pdata\10105878\CADD\TransPW\Div\Detail\c0F031ga015.dgn

LAST REVISION | DATE PLOTTED => 16-DEC-2009
08-01-08 | TIME PLOTTED => 10:57

BORDER LAST REVISED 4/11/2008
RELATIVE BORDER SCALE IS IN INCHES 0 1 2 3
USERNAME => trpierce
DGN FILE => c0F031ga015.dgn
CU 12220
EA 0F0311

NOTE:
FOR COMPLETE RIGHT OF WAY AND ACCURATE ACCESS DATA,
SEE RIGHT OF WAY RECORD MAPS AT DISTRICT OFFICE.

Dist	COUNTY	ROUTE	POST MILES TOTAL PROJECT	SHEET No.	TOTAL SHEETS
12	Ora	57	16.2/18.6	57	960

REGISTERED CIVIL ENGINEER — DATE 7/15/09

JOSUE J. VAGLIENTY No. 70783 Exp. 6-30-11 CIVIL — REGISTERED PROFESSIONAL ENGINEER — STATE OF CALIFORNIA

12-14-09
PLANS APPROVAL DATE

THE STATE OF CALIFORNIA OR ITS OFFICERS OR AGENTS SHALL NOT BE RESPONSIBLE FOR THE ACCURACY OR COMPLETENESS OF SCANNED COPIES OF THIS PLAN SHEET.

RBF CONSULTING
14275 ALTON PKWY
IRVINE, CA 92618

OCTA
550 S. MAIN STREET
ORANGE, CA 92863

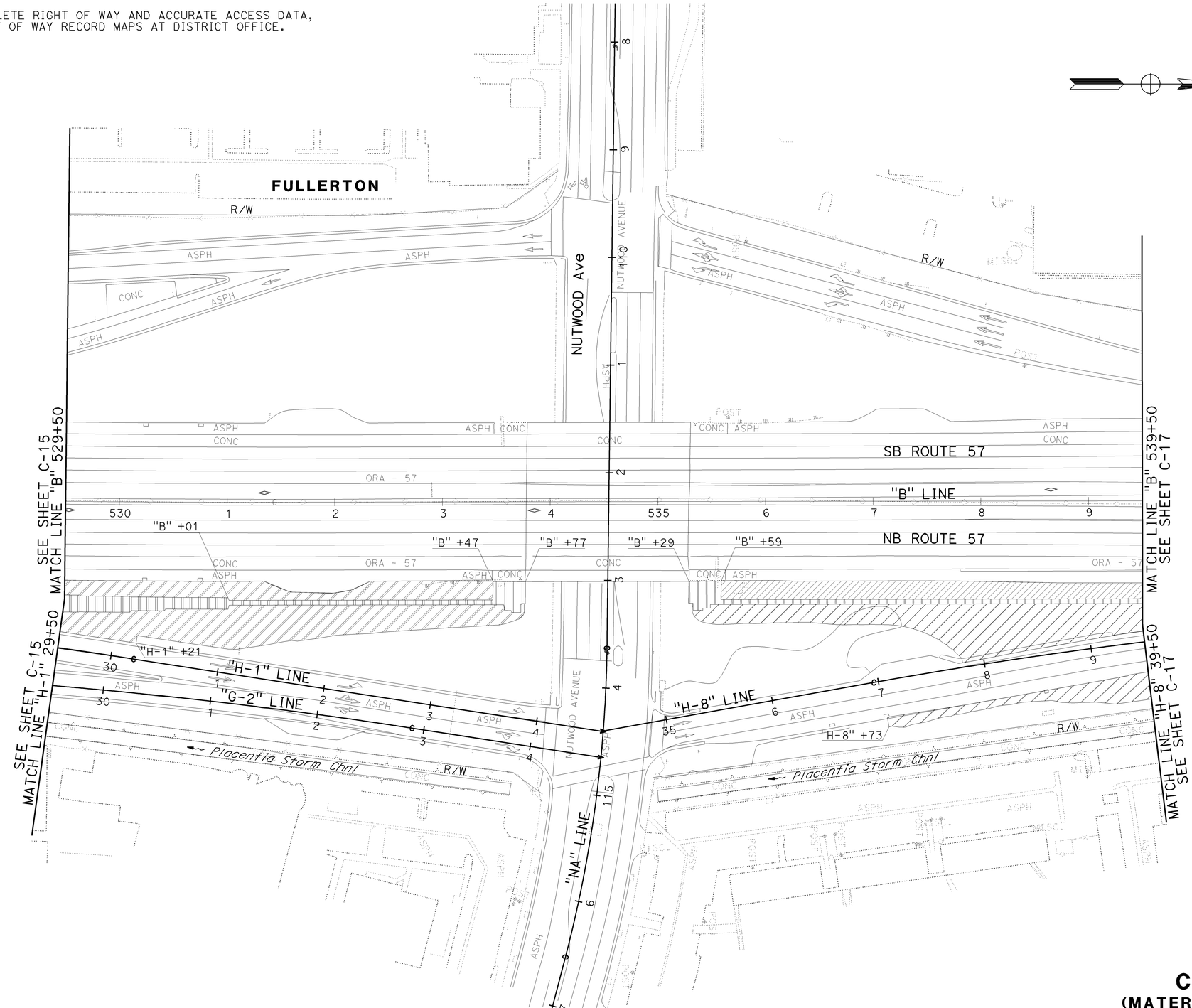

THIS PLAN ACCURATE FOR ADL WORK ONLY.

CONSTRUCTION DETAILS
(MATERIAL WITH AERIALLY DEPOSITED LEAD) (EXISTING)

SCALE: 1" = 50'

C-16

LAST REVISION DATE PLOTTED => 16-DEC-2009
08-01-08 TIME PLOTTED => 10:57

STATE OF CALIFORNIA - DEPARTMENT OF TRANSPORTATION
Caltrans
CONSULTANT FUNCTIONAL SUPERVISOR: GONZALO PEÑA
CHECKED BY: JOSUE VAGLIENTY
CALCULATED-DESIGNED BY: REBECCA KELCHER
REVISED BY
DATE REVISED

16-DEC-2009 10:57 trpierce
H:\pdata\10105878\CADD\TransPW\Div\Detail\c0F031ga016.dgn

BORDER LAST REVISED 4/11/2008
RELATIVE BORDER SCALE IS IN INCHES 0 1 2 3
USERNAME => trpierce
DGN FILE => c0F031ga016.dgn
CU 12220
EA 0F0311

NOTE:

FOR COMPLETE RIGHT OF WAY AND ACCURATE ACCESS DATA, SEE RIGHT OF WAY RECORD MAPS AT DISTRICT OFFICE.

Dist	COUNTY	ROUTE	POST MILES TOTAL PROJECT	SHEET No.	TOTAL SHEETS
12	Ora	57	16.2/18.6	58	960

REGISTERED CIVIL ENGINEER — DATE 7/15/09

JOSUE J. VAGLIENTY No. 70783 Exp. 6-30-11 CIVIL — REGISTERED PROFESSIONAL ENGINEER — STATE OF CALIFORNIA

12-14-09
PLANS APPROVAL DATE

THE STATE OF CALIFORNIA OR ITS OFFICERS OR AGENTS SHALL NOT BE RESPONSIBLE FOR THE ACCURACY OR COMPLETENESS OF SCANNED COPIES OF THIS PLAN SHEET.

RBF CONSULTING
14275 ALTON PKWY
IRVINE, CA 92618

OCTA
550 S. MAIN STREET
ORANGE, CA 92863

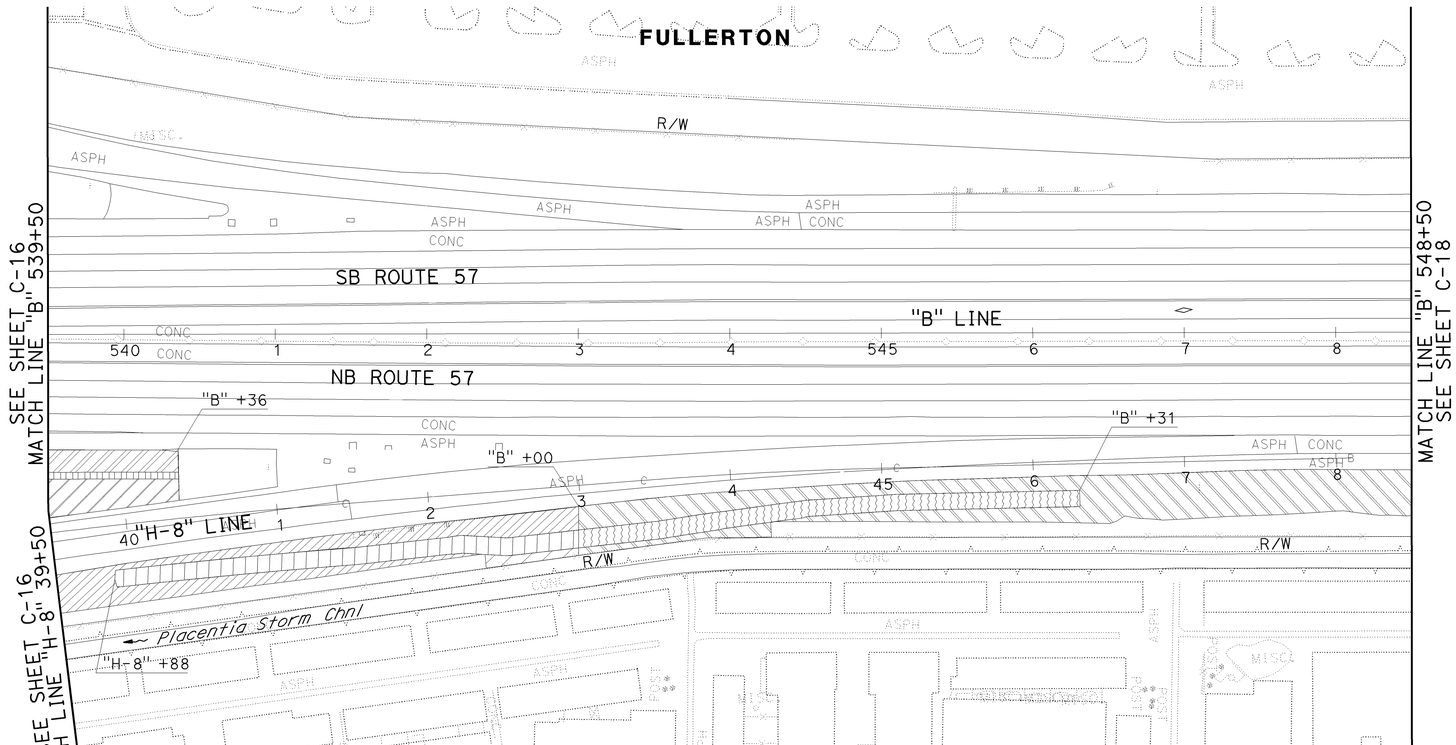

CONSTRUCTION DETAILS
(MATERIAL WITH AERIALLY DEPOSITED LEAD) (EXISTING)

SCALE: 1" = 50'

C-17

THIS PLAN ACCURATE FOR ADL WORK ONLY.

STATE OF CALIFORNIA - DEPARTMENT OF TRANSPORTATION
CHECKED BY: JOSUE VAGLIENTY
CALCULATED-DESIGNED BY: REBECCA KELCHER
CONSULTANT FUNCTIONAL SUPERVISOR: GONZALO PEÑA
REVISED BY | DATE REVISED

H:\pdata\1010587B\CADD\TransPW\Div\Detail\c0F031ga017.dgn
trpierce 16-DEC-2009 10:57

LAST REVISION | DATE PLOTTED => 16-DEC-2009
08-01-08 | TIME PLOTTED => 10:57

BORDER LAST REVISED 4/11/2008 | RELATIVE BORDER SCALE IS IN INCHES 0 1 2 3 | USERNAME => trpierce | DGN FILE => c0F031ga017.dgn | CU 12220 | EA 0F0311

NOTE:

FOR COMPLETE RIGHT OF WAY AND ACCURATE ACCESS DATA,
SEE RIGHT OF WAY RECORD MAPS AT DISTRICT OFFICE.

Dist	COUNTY	ROUTE	POST MILES TOTAL PROJECT	SHEET No.	TOTAL SHEETS
12	Ora	57	16.2/18.6	59	960

REGISTERED CIVIL ENGINEER — DATE 7/15/09

JOSUE J. VAGLIENTY No. 70783 Exp. 6-30-11 CIVIL — REGISTERED PROFESSIONAL ENGINEER — STATE OF CALIFORNIA

12-14-09
PLANS APPROVAL DATE

THE STATE OF CALIFORNIA OR ITS OFFICERS OR AGENTS SHALL NOT BE RESPONSIBLE FOR THE ACCURACY OR COMPLETENESS OF SCANNED COPIES OF THIS PLAN SHEET.

RBF CONSULTING
14275 ALTON PKWY
IRVINE, CA 92618

OCTA
550 S. MAIN STREET
ORANGE, CA 92863

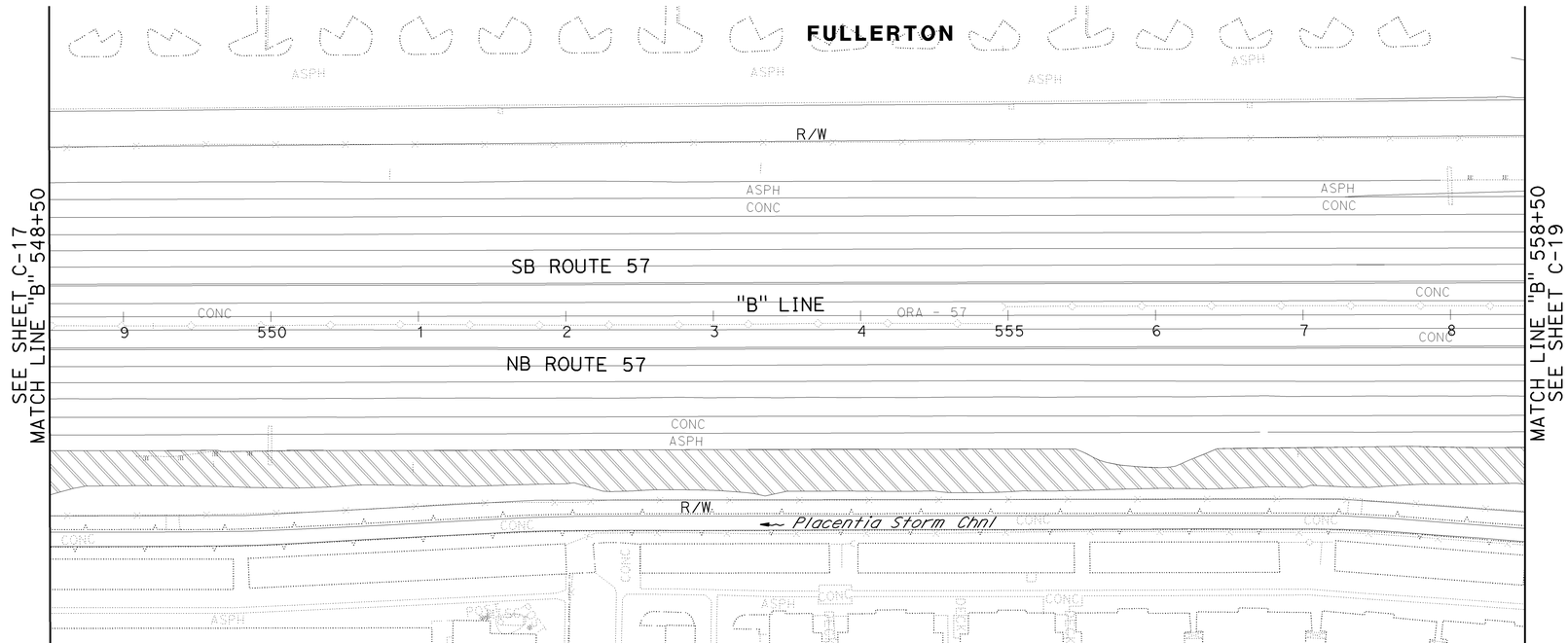

CONSTRUCTION DETAILS
(MATERIAL WITH AERIALLY DEPOSITED LEAD) (EXISTING)

SCALE: 1" = 50'

C-18

THIS PLAN ACCURATE FOR ADL WORK ONLY.

REVISED BY | DATE REVISED
REBECCA KELCHER | 16-DEC-2009 10:58
JOSUE VAGLIENTY
GONZALO PEÑA
CALCULATED-DESIGNED BY | CHECKED BY
CONSULTANT FUNCTIONAL SUPERVISOR
STATE OF CALIFORNIA - DEPARTMENT OF TRANSPORTATION
Caltrans
trpierce
H:\pdata\10105878\CADD\TransPW\Div\Detail\c0F031ga018.dgn

LAST REVISION 08-01-08 | DATE PLOTTED => 16-DEC-2009 | TIME PLOTTED => 10:58

BORDER LAST REVISED 4/11/2008 | RELATIVE BORDER SCALE IS IN INCHES 0 1 2 3 | USERNAME => trpierce | DGN FILE => c0F031ga018.dgn | CU 12220 | EA 0F0311

Dist	COUNTY	ROUTE	POST MILES TOTAL PROJECT	SHEET No.	TOTAL SHEETS
12	Ora	57	16.2/18.6	60	960

REGISTERED CIVIL ENGINEER 7/15/09 DATE

12-14-09
PLANS APPROVAL DATE

REGISTERED PROFESSIONAL ENGINEER
JOSUE J. VAGLIENTY
No. 70783
Exp. 6-30-11
CIVIL
STATE OF CALIFORNIA

THE STATE OF CALIFORNIA OR ITS OFFICERS OR AGENTS SHALL NOT BE RESPONSIBLE FOR THE ACCURACY OR COMPLETENESS OF SCANNED COPIES OF THIS PLAN SHEET.

RBF CONSULTING
14275 ALTON PKWY
IRVINE, CA 92618

OCTA
550 S. MAIN STREET
ORANGE, CA 92863

NOTE:
FOR COMPLETE RIGHT OF WAY AND ACCURATE ACCESS DATA, SEE RIGHT OF WAY RECORD MAPS AT DISTRICT OFFICE.

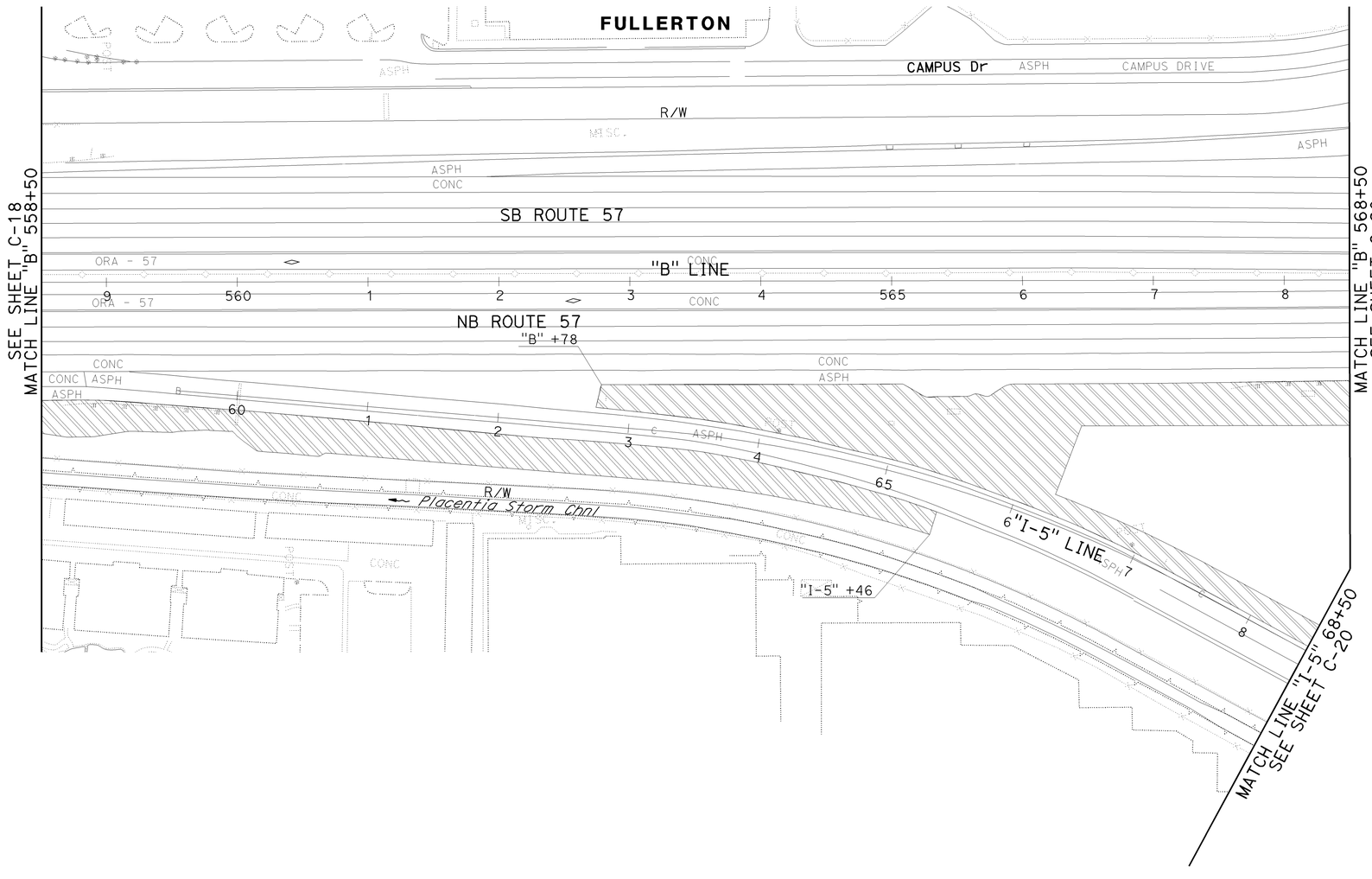

CONSTRUCTION DETAILS
(MATERIAL WITH AERIALLY DEPOSITED LEAD) (EXISTING)

SCALE: 1" = 50'

THIS PLAN ACCURATE FOR ADL WORK ONLY.

C-19

STATE OF CALIFORNIA - DEPARTMENT OF TRANSPORTATION
Caltrans
CONSULTANT FUNCTIONAL SUPERVISOR: GONZALO PEÑA
CALCULATED-DESIGNED BY: REBECCA KELCHER
CHECKED BY: JOSUE VAGLIENTY
REVISED BY
DATE REVISED

H:\pdata\10105878\CADD\TransPW\Div\Detail\c0F031ga019.dgn trpierce 16-DEC-2009 10:58

LAST REVISION 08-01-08
DATE PLOTTED => 16-DEC-2009
TIME PLOTTED => 10:58

BORDER LAST REVISED 4/11/2008
RELATIVE BORDER SCALE IS IN INCHES 0 1 2 3
USERNAME => trpierce
DGN FILE => c0F031ga019.dgn
CU 12220
EA 0F0311

NOTE:
FOR COMPLETE RIGHT OF WAY AND ACCURATE ACCESS DATA,
SEE RIGHT OF WAY RECORD MAPS AT DISTRICT OFFICE.

Dist	COUNTY	ROUTE	POST MILES TOTAL PROJECT	SHEET No.	TOTAL SHEETS
12	Ora	57	16.2/18.6	61	960

REGISTERED CIVIL ENGINEER — DATE 7/15/09

JOSUE J. VAGLIENTY No. 70783 Exp. 6-30-11 CIVIL — REGISTERED PROFESSIONAL ENGINEER — STATE OF CALIFORNIA

12-14-09
PLANS APPROVAL DATE

THE STATE OF CALIFORNIA OR ITS OFFICERS OR AGENTS SHALL NOT BE RESPONSIBLE FOR THE ACCURACY OR COMPLETENESS OF SCANNED COPIES OF THIS PLAN SHEET.

RBF CONSULTING
14275 ALTON PKWY
IRVINE, CA 92618

OCTA
550 S. MAIN STREET
ORANGE, CA 92863

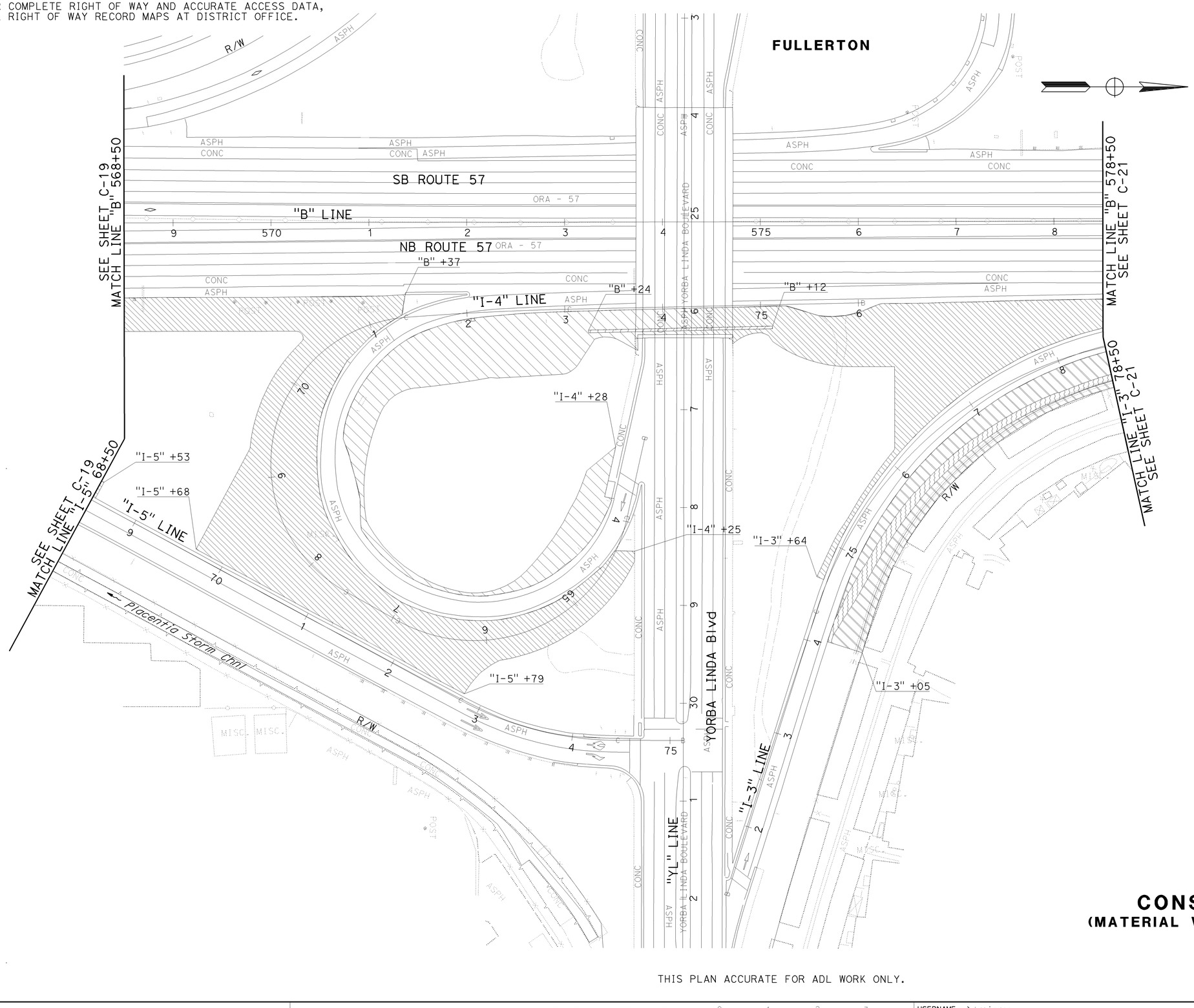

CONSTRUCTION DETAILS
(MATERIAL WITH AERIALLY DEPOSITED LEAD) (EXISTING)

SCALE: 1" = 50'

THIS PLAN ACCURATE FOR ADL WORK ONLY.

C-20

STATE OF CALIFORNIA - DEPARTMENT OF TRANSPORTATION
Caltrans
CONSULTANT FUNCTIONAL SUPERVISOR: GONZALO PEÑA
CALCULATED-DESIGNED BY: REBECCA KELCHER
CHECKED BY: JOSUE VAGLIENTY
REVISED BY
DATE REVISED

H:\pdata\10105878\CADD\TransPW\Div\Detail\c0F031ga020.dgn
16-DEC-2009 10:58 trpierce

LAST REVISION DATE PLOTTED => 16-DEC-2009
TIME PLOTTED => 10:58

BORDER LAST REVISED 4/11/2008
RELATIVE BORDER SCALE IS IN INCHES 0 1 2 3
USERNAME => trpierce
DGN FILE => c0F031ga020.dgn
CU 12220
EA 0F0311

NOTE:
FOR COMPLETE RIGHT OF WAY AND ACCURATE ACCESS DATA, SEE RIGHT OF WAY RECORD MAPS AT DISTRICT OFFICE.

Dist	COUNTY	ROUTE	POST MILES TOTAL PROJECT	SHEET No.	TOTAL SHEETS
12	Ora	57	16.2/18.6	62	960

REGISTERED CIVIL ENGINEER 7/15/09 DATE

12-14-09
PLANS APPROVAL DATE

REGISTERED PROFESSIONAL ENGINEER JOSUE J. VAGLIENTY No. 70783 Exp. 6-30-11 CIVIL STATE OF CALIFORNIA

THE STATE OF CALIFORNIA OR ITS OFFICERS OR AGENTS SHALL NOT BE RESPONSIBLE FOR THE ACCURACY OR COMPLETENESS OF SCANNED COPIES OF THIS PLAN SHEET.

RBF CONSULTING
14275 ALTON PKWY
IRVINE, CA 92618

OCTA
550 S. MAIN STREET
ORANGE, CA 92863

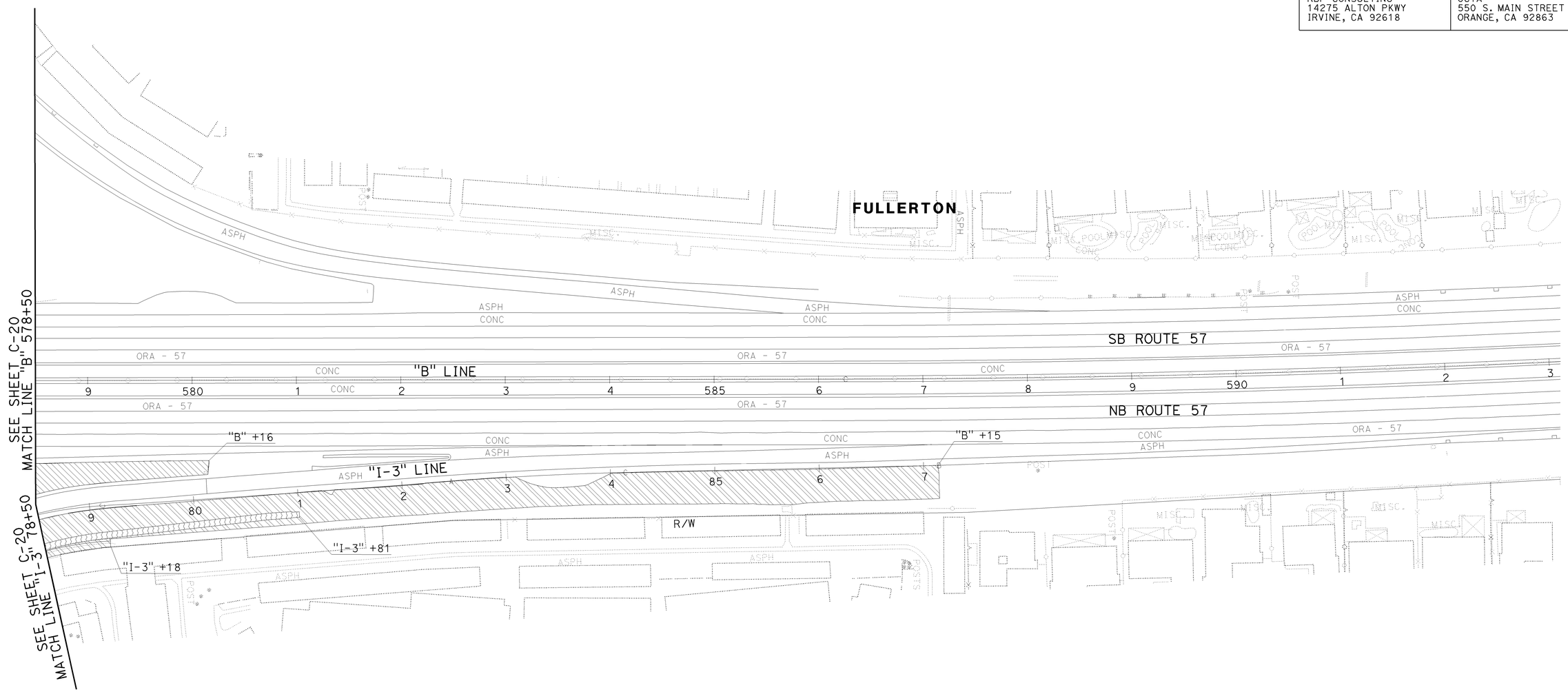

CONSTRUCTION DETAILS
(MATERIAL WITH AERIALLY DEPOSITED LEAD) (EXISTING)

SCALE: 1" = 50'

THIS PLAN ACCURATE FOR ADL WORK ONLY.

C-21

STATE OF CALIFORNIA - DEPARTMENT OF TRANSPORTATION
Caltrans

CONSULTANT FUNCTIONAL SUPERVISOR: GONZALO PEÑA
CALCULATED-DESIGNED BY: REBECCA KELCHER
CHECKED BY: JOSUE VAGLIENTY
REVISED BY
DATE REVISED

trpierce 16-DEC-2009 10:58
H:\pdata\10105878\CADD\TransPW\Div\Detail\c0F031ga021.dgn

LAST REVISION 08-01-08
DATE PLOTTED => 16-DEC-2009
TIME PLOTTED => 10:58

BORDER LAST REVISED 4/11/2008
RELATIVE BORDER SCALE IS IN INCHES 0 1 2 3
USERNAME => trpierce
DGN FILE => c0F031ga021.dgn
CU 12220
EA 0F0311

NOTE:
FOR COMPLETE RIGHT OF WAY AND ACCURATE ACCESS DATA,
SEE RIGHT OF WAY RECORD MAPS AT DISTRICT OFFICE.

Dist	COUNTY	ROUTE	POST MILES TOTAL PROJECT	SHEET No.	TOTAL SHEETS
12	Ora	57	16.2/18.6	63	960

REGISTERED CIVIL ENGINEER — DATE 7/15/09

JOSUE J. VAGLIENTY No. 70783 Exp. 6-30-11 CIVIL — REGISTERED PROFESSIONAL ENGINEER — STATE OF CALIFORNIA

12-14-09
PLANS APPROVAL DATE

THE STATE OF CALIFORNIA OR ITS OFFICERS OR AGENTS SHALL NOT BE RESPONSIBLE FOR THE ACCURACY OR COMPLETENESS OF SCANNED COPIES OF THIS PLAN SHEET.

RBF CONSULTING
14275 ALTON PKWY
IRVINE, CA 92618

OCTA
550 S. MAIN STREET
ORANGE, CA 92863

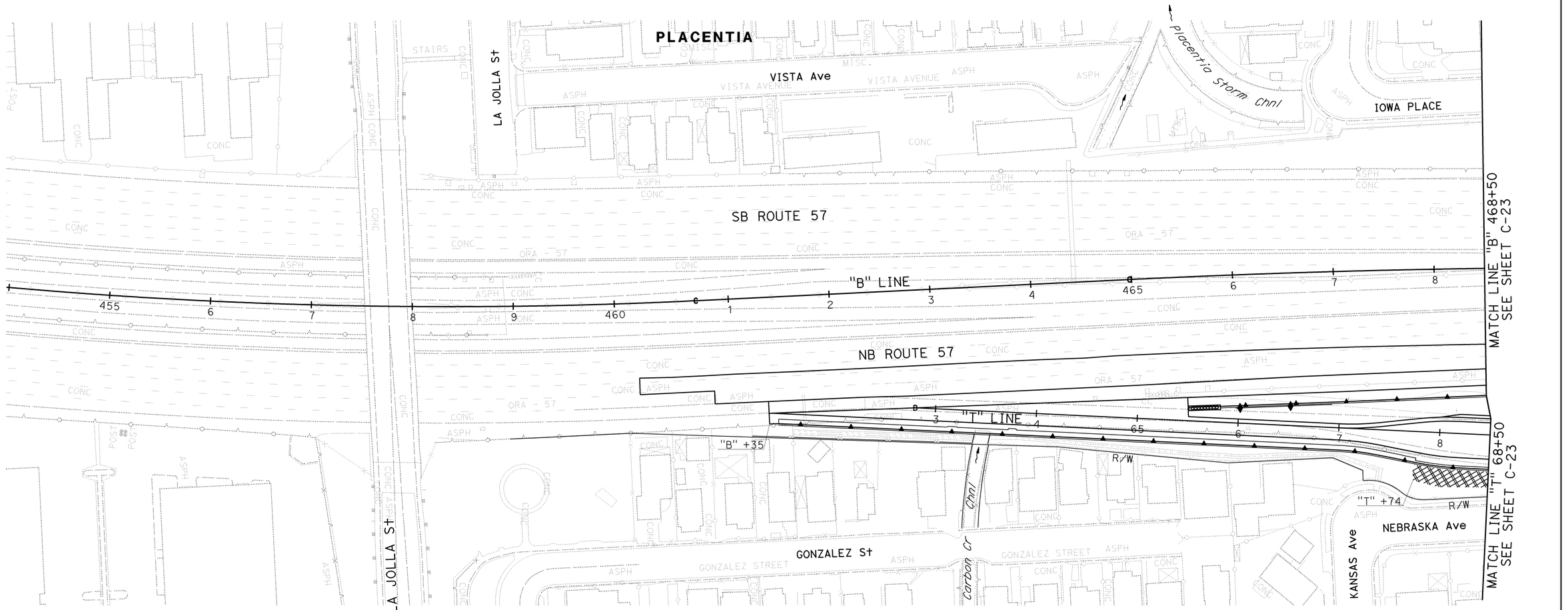

CONSTRUCTION DETAILS
(MATERIAL WITH AERIALLY DEPOSITED LEAD)
(PLACEMENT)

SCALE: 1" = 50'

THIS PLAN ACCURATE FOR ADL WORK ONLY.

C-22

STATE OF CALIFORNIA - DEPARTMENT OF TRANSPORTATION	Caltrans
CONSULTANT FUNCTIONAL SUPERVISOR	GONZALO PEÑA
CALCULATED-DESIGNED BY	REBECCA KELCHER
CHECKED BY	JOSUE VAGLIENTY
REVISED BY	
DATE REVISED	

J:\PSESubmit\0F0311\c0F031ga022.dgn 16-DEC-2009 10:58 trpierce

LAST REVISION 08-01-08 | DATE PLOTTED => 16-DEC-2009 | TIME PLOTTED => 10:58

BORDER LAST REVISED 4/11/2008 | RELATIVE BORDER SCALE IS IN INCHES 0 1 2 3 | USERNAME => trpierce | DGN FILE => c0F031ga022.dgn | CU 12220 | EA 0F0311

NOTE:
FOR COMPLETE RIGHT OF WAY AND ACCURATE ACCESS DATA, SEE RIGHT OF WAY RECORD MAPS AT DISTRICT OFFICE.

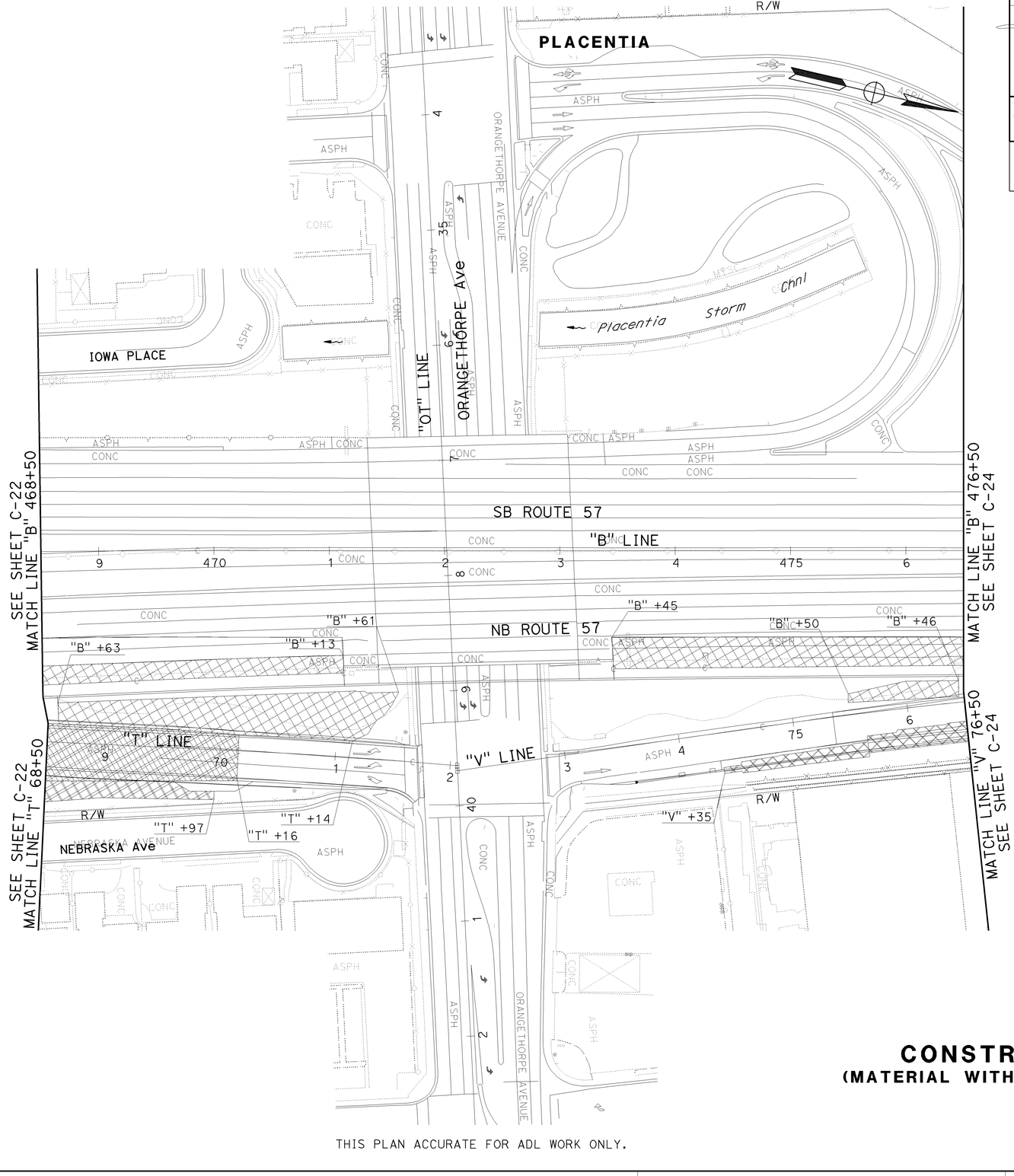

THIS PLAN ACCURATE FOR ADL WORK ONLY.

Dist	COUNTY	ROUTE	POST MILES TOTAL PROJECT	SHEET No.	TOTAL SHEETS
12	Ora	57	16.2/18.6	64	960

7/15/09
REGISTERED CIVIL ENGINEER DATE

JOSUE J. VAGLIENTY No. 70783 Exp. 6-30-11 CIVIL — REGISTERED PROFESSIONAL ENGINEER — STATE OF CALIFORNIA

12-14-09
PLANS APPROVAL DATE

THE STATE OF CALIFORNIA OR ITS OFFICERS OR AGENTS SHALL NOT BE RESPONSIBLE FOR THE ACCURACY OR COMPLETENESS OF SCANNED COPIES OF THIS PLAN SHEET.

RBF CONSULTING
14275 ALTON PKWY
IRVINE, CA 92618

OCTA
550 S. MAIN STREET
ORANGE, CA 92863

CONSTRUCTION DETAILS
(MATERIAL WITH AERIALLY DEPOSITED LEAD) (PLACEMENT)

SCALE: 1" = 50'

C-23

STATE OF CALIFORNIA - DEPARTMENT OF TRANSPORTATION
Caltrans
CONSULTANT FUNCTIONAL SUPERVISOR: GONZALO PEÑA
CALCULATED-DESIGNED BY: REBECCA KELCHER
CHECKED BY: JOSUE VAGLIENTY
REVISED BY
DATE REVISED

H:\pdata\10105878\CADD\TransPW\Div\Detail\c0F031ga023.dgn
trpierce
16-DEC-2009 10:58

LAST REVISION | DATE PLOTTED => 16-DEC-2009
08-01-08 | TIME PLOTTED => 10:58

BORDER LAST REVISED 4/11/2008
RELATIVE BORDER SCALE IS IN INCHES 0 1 2 3
USERNAME => trpierce
DGN FILE => c0F031ga023.dgn
CU 12220
EA 0F0311

NOTE:
FOR COMPLETE RIGHT OF WAY AND ACCURATE ACCESS DATA,
SEE RIGHT OF WAY RECORD MAPS AT DISTRICT OFFICE.

Dist	COUNTY	ROUTE	POST MILES TOTAL PROJECT	SHEET No.	TOTAL SHEETS
12	Ora	57	16.2/18.6	65	960

REGISTERED CIVIL ENGINEER — DATE 7/15/09

JOSUE J. VAGLIENTY No. 70783 Exp. 6-30-11 CIVIL — REGISTERED PROFESSIONAL ENGINEER — STATE OF CALIFORNIA

12-14-09
PLANS APPROVAL DATE

THE STATE OF CALIFORNIA OR ITS OFFICERS OR AGENTS SHALL NOT BE RESPONSIBLE FOR THE ACCURACY OR COMPLETENESS OF SCANNED COPIES OF THIS PLAN SHEET.

RBF CONSULTING
14275 ALTON PKWY
IRVINE, CA 92618

OCTA
550 S. MAIN STREET
ORANGE, CA 92863

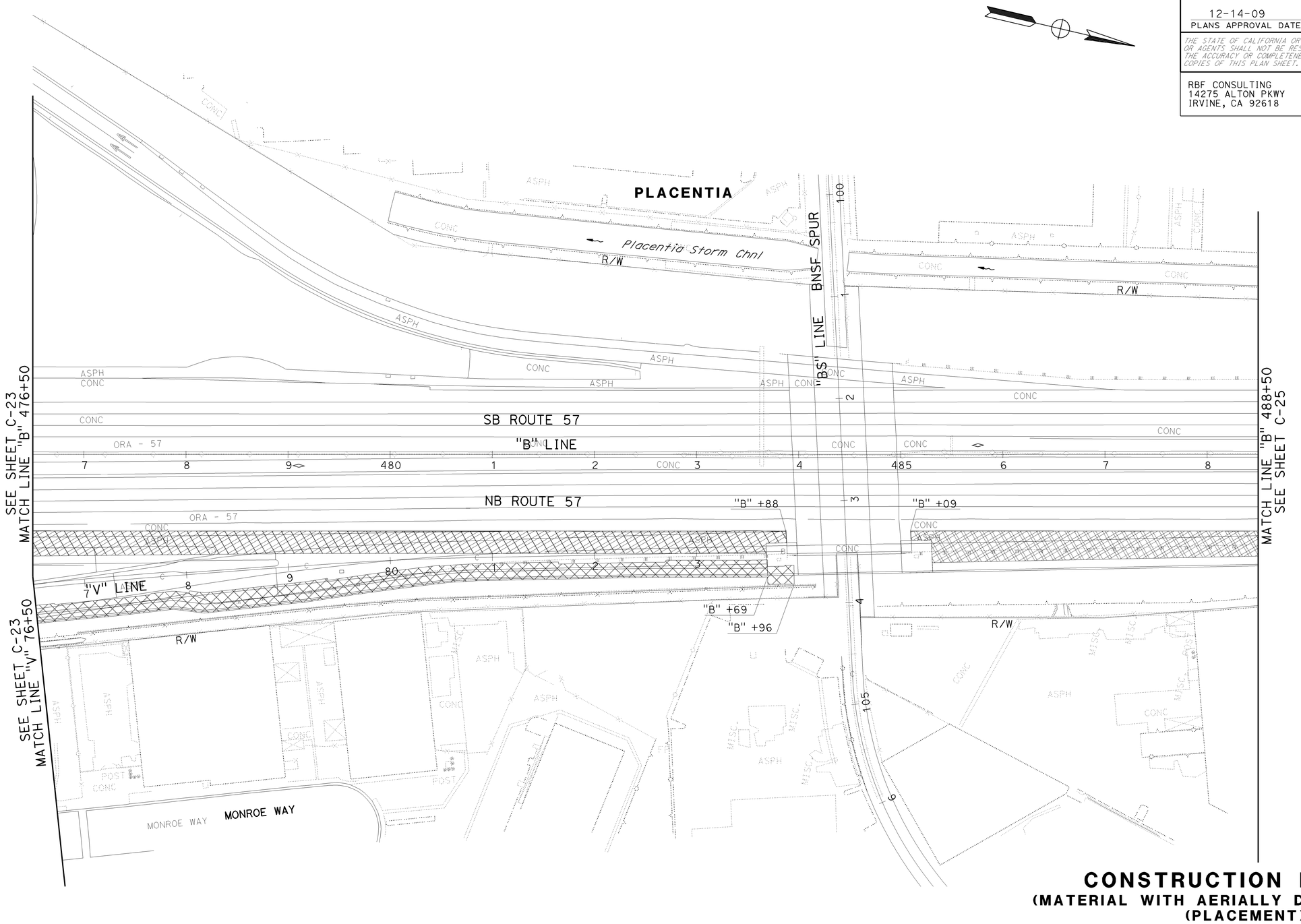

CONSTRUCTION DETAILS
(MATERIAL WITH AERIALLY DEPOSITED LEAD) (PLACEMENT)

SCALE: 1" = 50'

THIS PLAN ACCURATE FOR ADL WORK ONLY.

C-24

REVISED BY	DATE REVISED

CALCULATED-DESIGNED BY: REBECCA KELCHER
CHECKED BY: JOSUE VAGLIENTY
CONSULTANT FUNCTIONAL SUPERVISOR: GONZALO PEÑA
STATE OF CALIFORNIA - DEPARTMENT OF TRANSPORTATION

trpierce 16-DEC-2009 10:58
H:\pdata\10105878\CADD\TransPW\Div\Detail\c0F031ga024.dgn

LAST REVISION DATE PLOTTED => 16-DEC-2009
TIME PLOTTED => 10:58

BORDER LAST REVISED 4/11/2008
RELATIVE BORDER SCALE IS IN INCHES 0 1 2 3
USERNAME => trpierce
DGN FILE => c0F031ga024.dgn
CU 12220
EA 0F0311

NOTE:
FOR COMPLETE RIGHT OF WAY AND ACCURATE ACCESS DATA,
SEE RIGHT OF WAY RECORD MAPS AT DISTRICT OFFICE.

Dist	COUNTY	ROUTE	POST MILES TOTAL PROJECT	SHEET No.	TOTAL SHEETS
12	Ora	57	16.2/18.6	66	960

REGISTERED CIVIL ENGINEER — DATE 7/15/09

JOSUE J. VAGLIENTY No. 70783 Exp. 6-30-11 CIVIL — REGISTERED PROFESSIONAL ENGINEER — STATE OF CALIFORNIA

12-14-09
PLANS APPROVAL DATE

THE STATE OF CALIFORNIA OR ITS OFFICERS OR AGENTS SHALL NOT BE RESPONSIBLE FOR THE ACCURACY OR COMPLETENESS OF SCANNED COPIES OF THIS PLAN SHEET.

RBF CONSULTING
14275 ALTON PKWY
IRVINE, CA 92618

OCTA
550 S. MAIN STREET
ORANGE, CA 92863

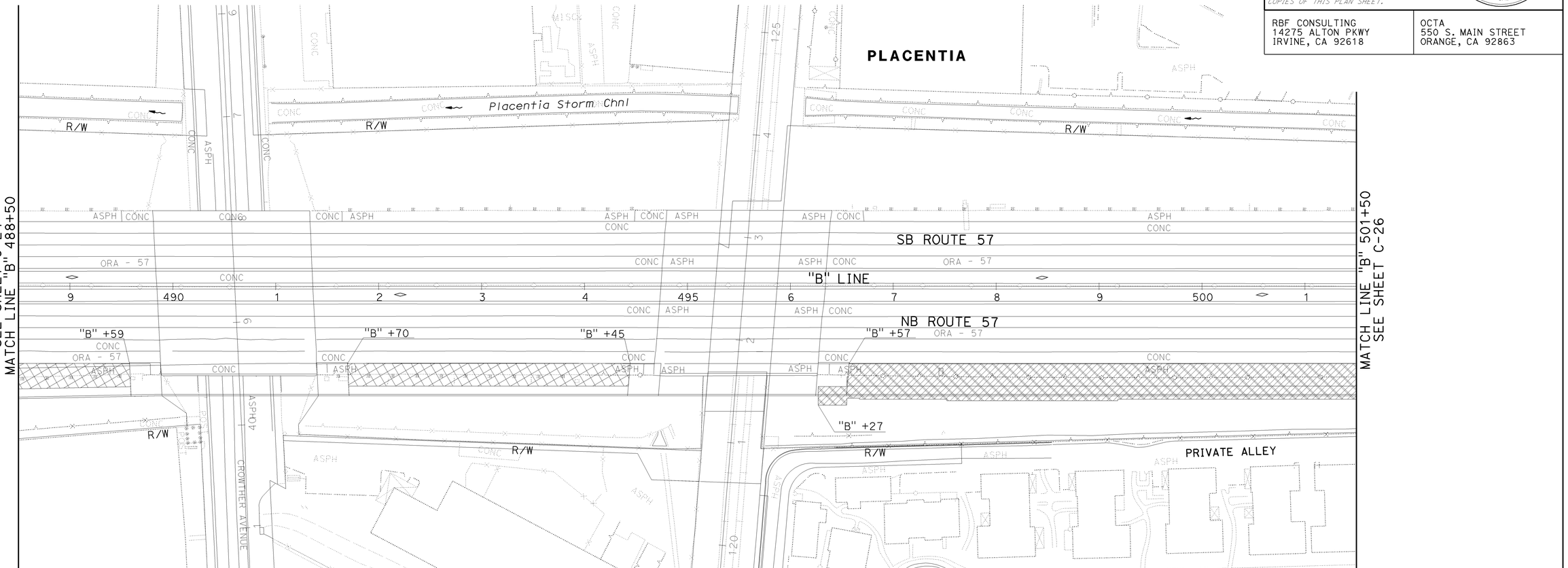

CONSTRUCTION DETAILS
(MATERIAL WITH AERIALLY DEPOSITED LEAD) (PLACEMENT)

SCALE: 1" = 50'

C-25

THIS PLAN ACCURATE FOR ADL WORK ONLY.

CALCULATED-DESIGNED BY	CHECKED BY	REVISED BY	DATE REVISED
REBECCA KELCHER	JOSUE VAGLIENTY		

CONSULTANT FUNCTIONAL SUPERVISOR: GONZALO PEÑA

STATE OF CALIFORNIA - DEPARTMENT OF TRANSPORTATION

Caltrans

H:\pdata\10105878\CADD\TransPW\Div\Detail\c0F031ga025.dgn
trpierce 16-DEC-2009 10:59

BORDER LAST REVISED 4/11/2008

RELATIVE BORDER SCALE IS IN INCHES 0 1 2 3

USERNAME => trpierce
DGN FILE => c0F031ga025.dgn

CU 12220

EA 0F0311

LAST REVISION | DATE PLOTTED => 16-DEC-2009
TIME PLOTTED => 10:59
08-01-08

NOTE:
FOR COMPLETE RIGHT OF WAY AND ACCURATE ACCESS DATA,
SEE RIGHT OF WAY RECORD MAPS AT DISTRICT OFFICE.

Dist	COUNTY	ROUTE	POST MILES TOTAL PROJECT	SHEET No.	TOTAL SHEETS
12	Ora	57	16.2/18.6	67	960

REGISTERED CIVIL ENGINEER — DATE 7/15/09

JOSUE J. VAGLIENTY
No. 70783
Exp. 6-30-11
CIVIL
REGISTERED PROFESSIONAL ENGINEER
STATE OF CALIFORNIA

12-14-09
PLANS APPROVAL DATE

THE STATE OF CALIFORNIA OR ITS OFFICERS OR AGENTS SHALL NOT BE RESPONSIBLE FOR THE ACCURACY OR COMPLETENESS OF SCANNED COPIES OF THIS PLAN SHEET.

RBF CONSULTING
14275 ALTON PKWY
IRVINE, CA 92618

OCTA
550 S. MAIN STREET
ORANGE, CA 92863

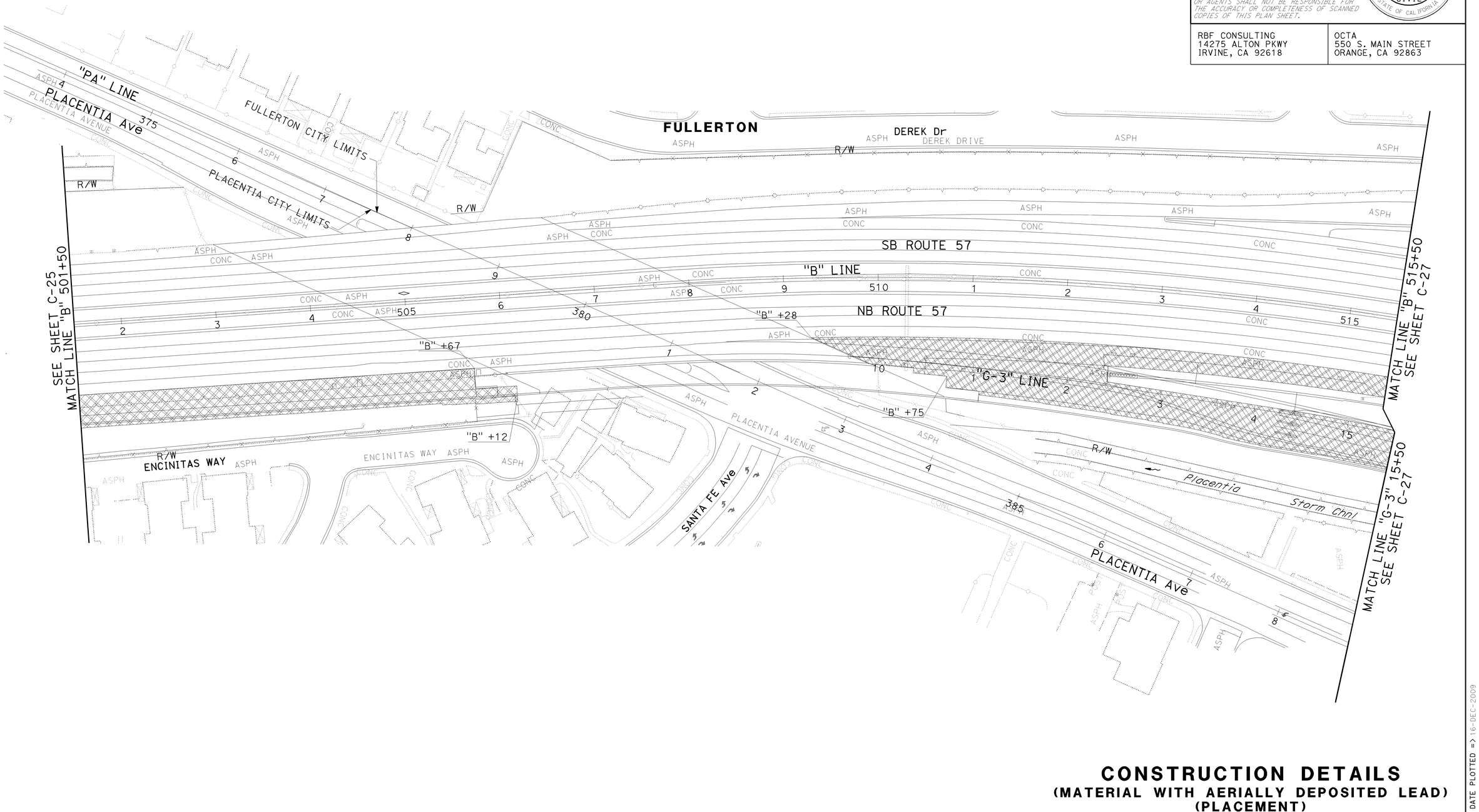

CONSTRUCTION DETAILS
(MATERIAL WITH AERIALLY DEPOSITED LEAD) (PLACEMENT)

SCALE: 1" = 50'

THIS PLAN ACCURATE FOR ADL WORK ONLY.

C-26

STATE OF CALIFORNIA - DEPARTMENT OF TRANSPORTATION
Caltrans
CONSULTANT FUNCTIONAL SUPERVISOR: GONZALO PEÑA
CALCULATED-DESIGNED BY: REBECCA KELCHER
CHECKED BY: JOSUE VAGLIENTY
REVISED BY
DATE REVISED

H:\pdata\10105878\CADD\TransPW\Div\Detail\c0F031ga026.dgn
trpierce
16-DEC-2009 10:59

LAST REVISION | DATE PLOTTED => 16-DEC-2009
08-01-08 | TIME PLOTTED => 10:59

BORDER LAST REVISED 4/11/2008 | RELATIVE BORDER SCALE IS IN INCHES 0 1 2 3 | USERNAME => trpierce | DGN FILE => c0F031ga026.dgn | CU 12220 | EA 0F0311

NOTE:
FOR COMPLETE RIGHT OF WAY AND ACCURATE ACCESS DATA,
SEE RIGHT OF WAY RECORD MAPS AT DISTRICT OFFICE.

Dist	COUNTY	ROUTE	POST MILES TOTAL PROJECT	SHEET No.	TOTAL SHEETS
12	Ora	57	16.2/18.6	68	960

REGISTERED CIVIL ENGINEER — DATE 7/15/09

JOSUE J. VAGLIENTY No. 70783 Exp. 6-30-11 CIVIL — REGISTERED PROFESSIONAL ENGINEER — STATE OF CALIFORNIA

12-14-09
PLANS APPROVAL DATE

THE STATE OF CALIFORNIA OR ITS OFFICERS OR AGENTS SHALL NOT BE RESPONSIBLE FOR THE ACCURACY OR COMPLETENESS OF SCANNED COPIES OF THIS PLAN SHEET.

RBF CONSULTING
14275 ALTON PKWY
IRVINE, CA 92618

OCTA
550 S. MAIN STREET
ORANGE, CA 92863

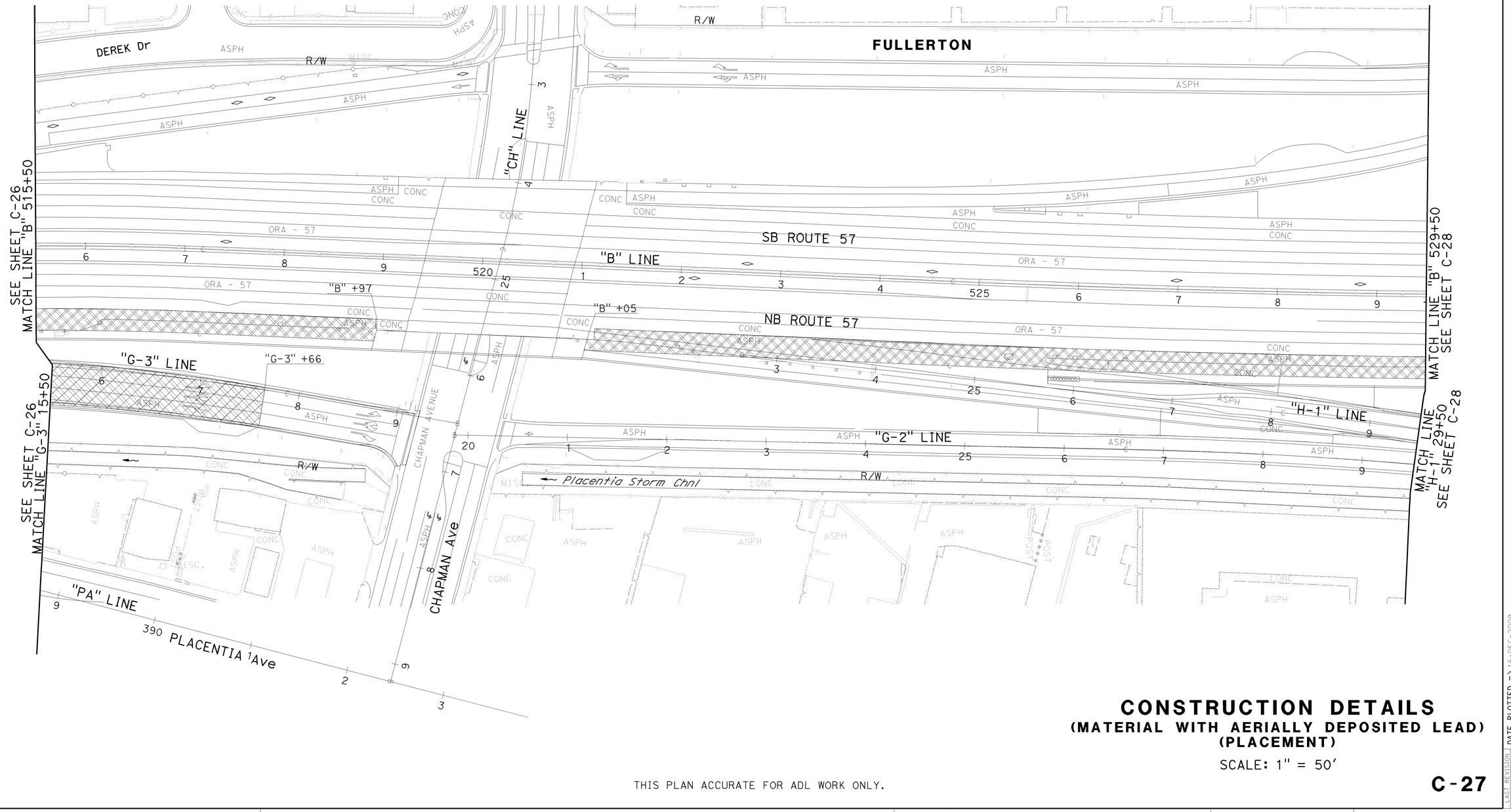

CONSTRUCTION DETAILS
(MATERIAL WITH AERIALLY DEPOSITED LEAD) (PLACEMENT)

SCALE: 1" = 50'

THIS PLAN ACCURATE FOR ADL WORK ONLY.

C-27

REVISED BY | DATE REVISED
REBECCA KELCHER | 16-DEC-2009 10:59
CALCULATED-DESIGNED BY: JOSUE VAGLIENTY
CHECKED BY: trpierce
CONSULTANT FUNCTIONAL SUPERVISOR: GONZALO PEÑA
STATE OF CALIFORNIA - DEPARTMENT OF TRANSPORTATION
Caltrans

H:\pdata\10105878\CADD\TransPW\Div\Detail\c0F031ga027.dgn

LAST REVISION | DATE PLOTTED => 16-DEC-2009
08-01-08 | TIME PLOTTED => 10:59

BORDER LAST REVISED 4/11/2008 | RELATIVE BORDER SCALE IS IN INCHES 0 1 2 3 | USERNAME => trpierce | DGN FILE => c0F031ga027.dgn | CU 12220 | EA 0F0311

NOTE:

FOR COMPLETE RIGHT OF WAY AND ACCURATE ACCESS DATA, SEE RIGHT OF WAY RECORD MAPS AT DISTRICT OFFICE.

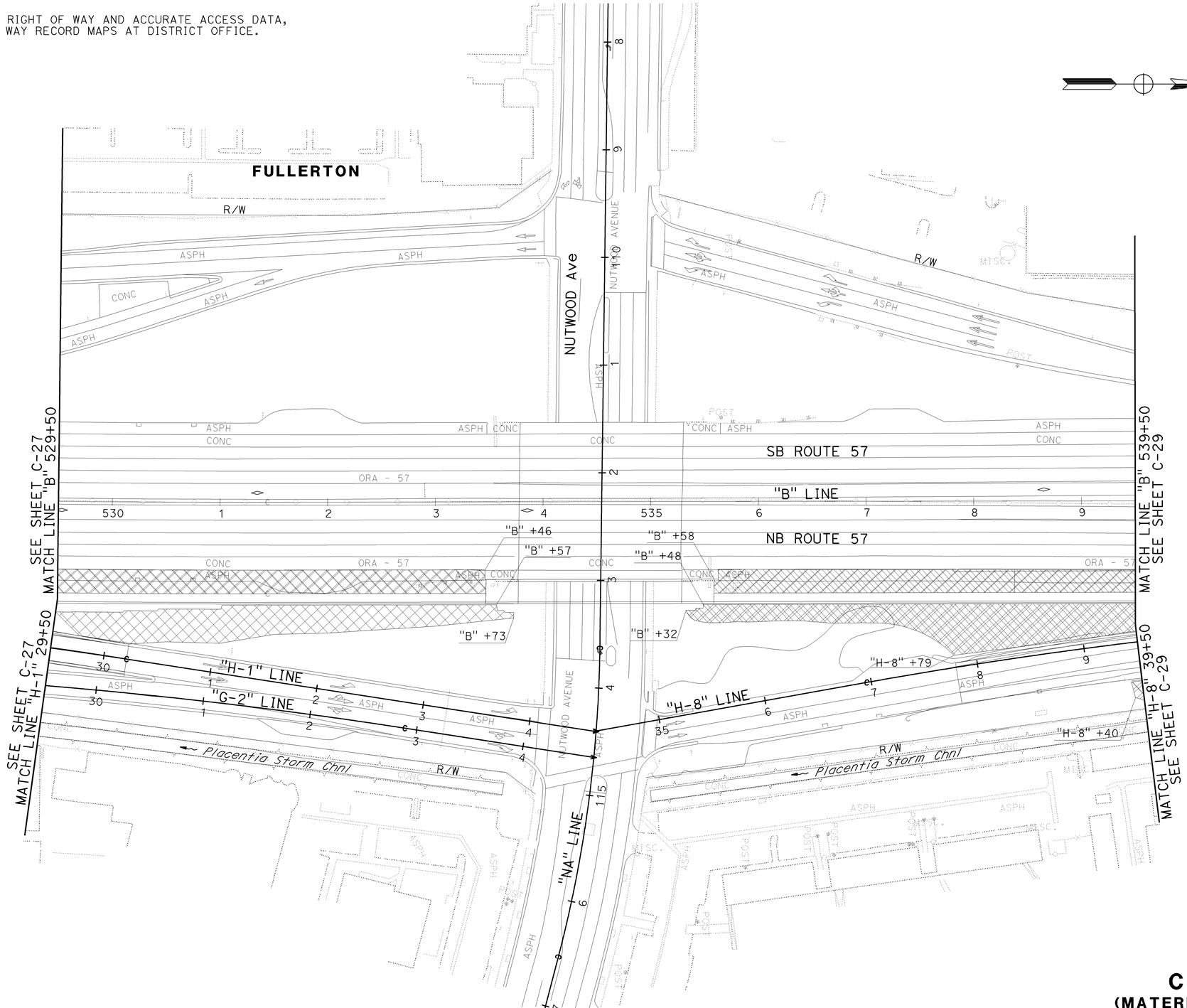

THIS PLAN ACCURATE FOR ADL WORK ONLY.

CONSTRUCTION DETAILS
(MATERIAL WITH AERIALLY DEPOSITED LEAD) (PLACEMENT)

SCALE: 1" = 50'

C-28

Dist	COUNTY	ROUTE	POST MILES TOTAL PROJECT	SHEET No.	TOTAL SHEETS
12	Ora	57	16.2/18.6	69	960

REGISTERED CIVIL ENGINEER — DATE 7/15/09

JOSUE J. VAGLIENTY No. 70783 Exp. 6-30-11 CIVIL — REGISTERED PROFESSIONAL ENGINEER — STATE OF CALIFORNIA

12-14-09
PLANS APPROVAL DATE

THE STATE OF CALIFORNIA OR ITS OFFICERS OR AGENTS SHALL NOT BE RESPONSIBLE FOR THE ACCURACY OR COMPLETENESS OF SCANNED COPIES OF THIS PLAN SHEET.

RBF CONSULTING
14275 ALTON PKWY
IRVINE, CA 92618

OCTA
550 S. MAIN STREET
ORANGE, CA 92863

REVISED BY	DATE REVISED

CALCULATED-DESIGNED BY: REBECCA KELCHER
CHECKED BY: JOSUE VAGLIENTY
CONSULTANT FUNCTIONAL SUPERVISOR: GONZALO PEÑA

STATE OF CALIFORNIA - DEPARTMENT OF TRANSPORTATION

Caltrans

LAST REVISION DATE PLOTTED => 16-DEC-2009
TIME PLOTTED => 10:59

H:\pdata\10105878\CADD\TransPW\Div\Detail\c0F031ga028.dgn trpierce 16-DEC-2009 10:59

BORDER LAST REVISED 4/11/2008

RELATIVE BORDER SCALE IS IN INCHES 0 1 2 3

USERNAME => trpierce
DGN FILE => c0F031ga028.dgn

CU 12220

EA 0F0311

NOTE:

FOR COMPLETE RIGHT OF WAY AND ACCURATE ACCESS DATA,
SEE RIGHT OF WAY RECORD MAPS AT DISTRICT OFFICE.

Dist	COUNTY	ROUTE	POST MILES TOTAL PROJECT	SHEET No.	TOTAL SHEETS
12	Ora	57	16.2/18.6	70	960

REGISTERED CIVIL ENGINEER — DATE 7/15/09

JOSUE J. VAGLIENTY No. 70783 Exp. 6-30-11 CIVIL — REGISTERED PROFESSIONAL ENGINEER — STATE OF CALIFORNIA

12-14-09
PLANS APPROVAL DATE

THE STATE OF CALIFORNIA OR ITS OFFICERS OR AGENTS SHALL NOT BE RESPONSIBLE FOR THE ACCURACY OR COMPLETENESS OF SCANNED COPIES OF THIS PLAN SHEET.

RBF CONSULTING
14275 ALTON PKWY
IRVINE, CA 92618

OCTA
550 S. MAIN STREET
ORANGE, CA 92863

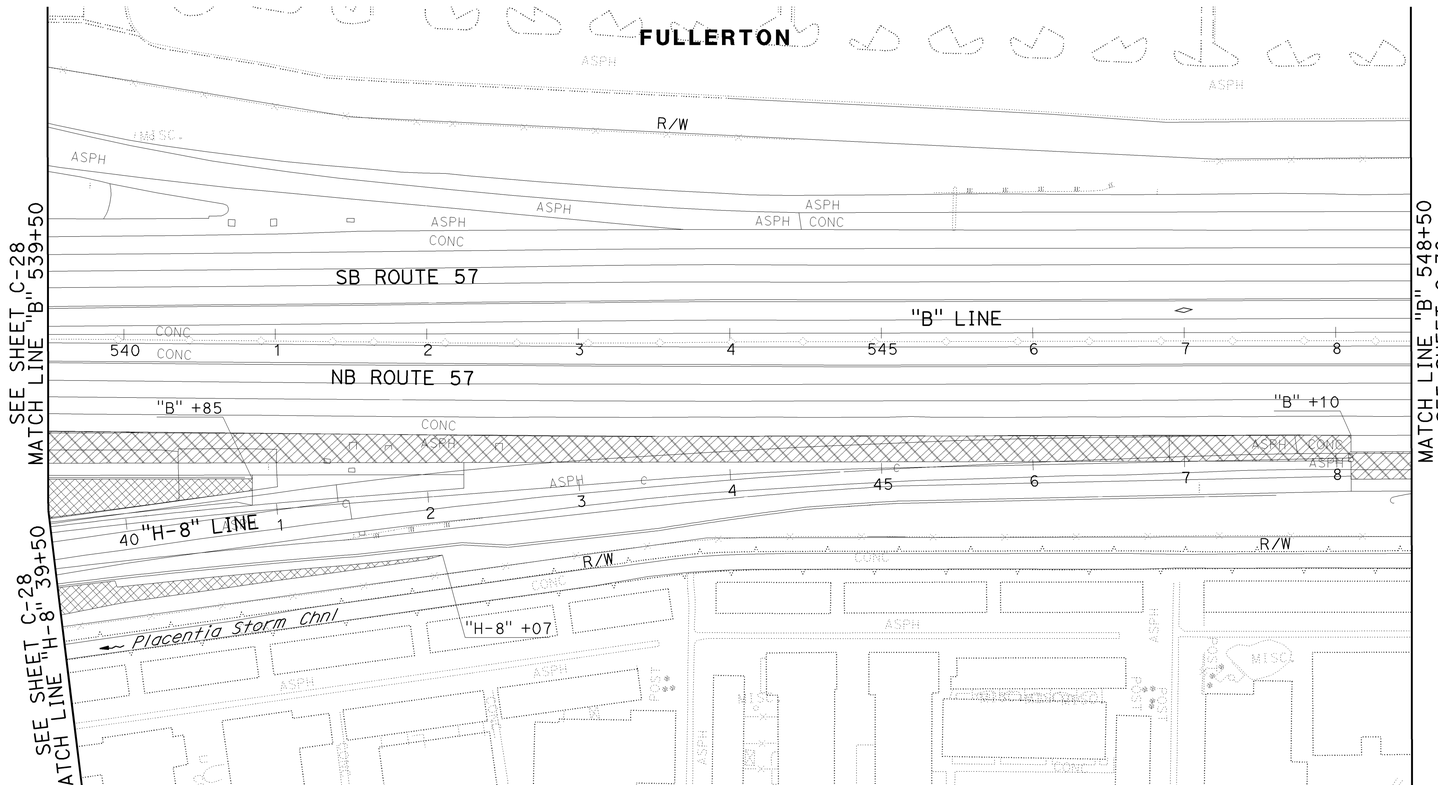

CONSTRUCTION DETAILS
(MATERIAL WITH AERIALLY DEPOSITED LEAD) (PLACEMENT)

SCALE: 1" = 50'

C-29

THIS PLAN ACCURATE FOR ADL WORK ONLY.

REVISED BY | DATE REVISED
CALCULATED-DESIGNED BY: REBECCA KELCHER
CHECKED BY: JOSUE VAGLIENTY
CONSULTANT FUNCTIONAL SUPERVISOR: GONZALO PEÑA
STATE OF CALIFORNIA - DEPARTMENT OF TRANSPORTATION
Caltrans

LAST REVISION DATE PLOTTED => 16-DEC-2009
TIME PLOTTED => 10:59
08-01-08

H:\pdata\10105878\CADD\TransPW\Div\Detail\c0F031ga029.dgn
16-DEC-2009 10:59
trpierce

BORDER LAST REVISED 4/11/2008

RELATIVE BORDER SCALE IS IN INCHES 0 1 2 3

USERNAME => trpierce
DGN FILE => c0F031ga029.dgn

CU 12220

EA 0F0311

NOTE:

FOR COMPLETE RIGHT OF WAY AND ACCURATE ACCESS DATA,
SEE RIGHT OF WAY RECORD MAPS AT DISTRICT OFFICE.

Dist	COUNTY	ROUTE	POST MILES TOTAL PROJECT	SHEET No.	TOTAL SHEETS
12	Ora	57	16.2/18.6	71	960

7/15/09
REGISTERED CIVIL ENGINEER DATE

JOSUE J. VAGLIENTY No. 70783 Exp. 6-30-11 CIVIL — REGISTERED PROFESSIONAL ENGINEER — STATE OF CALIFORNIA

12-14-09
PLANS APPROVAL DATE

THE STATE OF CALIFORNIA OR ITS OFFICERS OR AGENTS SHALL NOT BE RESPONSIBLE FOR THE ACCURACY OR COMPLETENESS OF SCANNED COPIES OF THIS PLAN SHEET.

RBF CONSULTING
14275 ALTON PKWY
IRVINE, CA 92618

OCTA
550 S. MAIN STREET
ORANGE, CA 92863

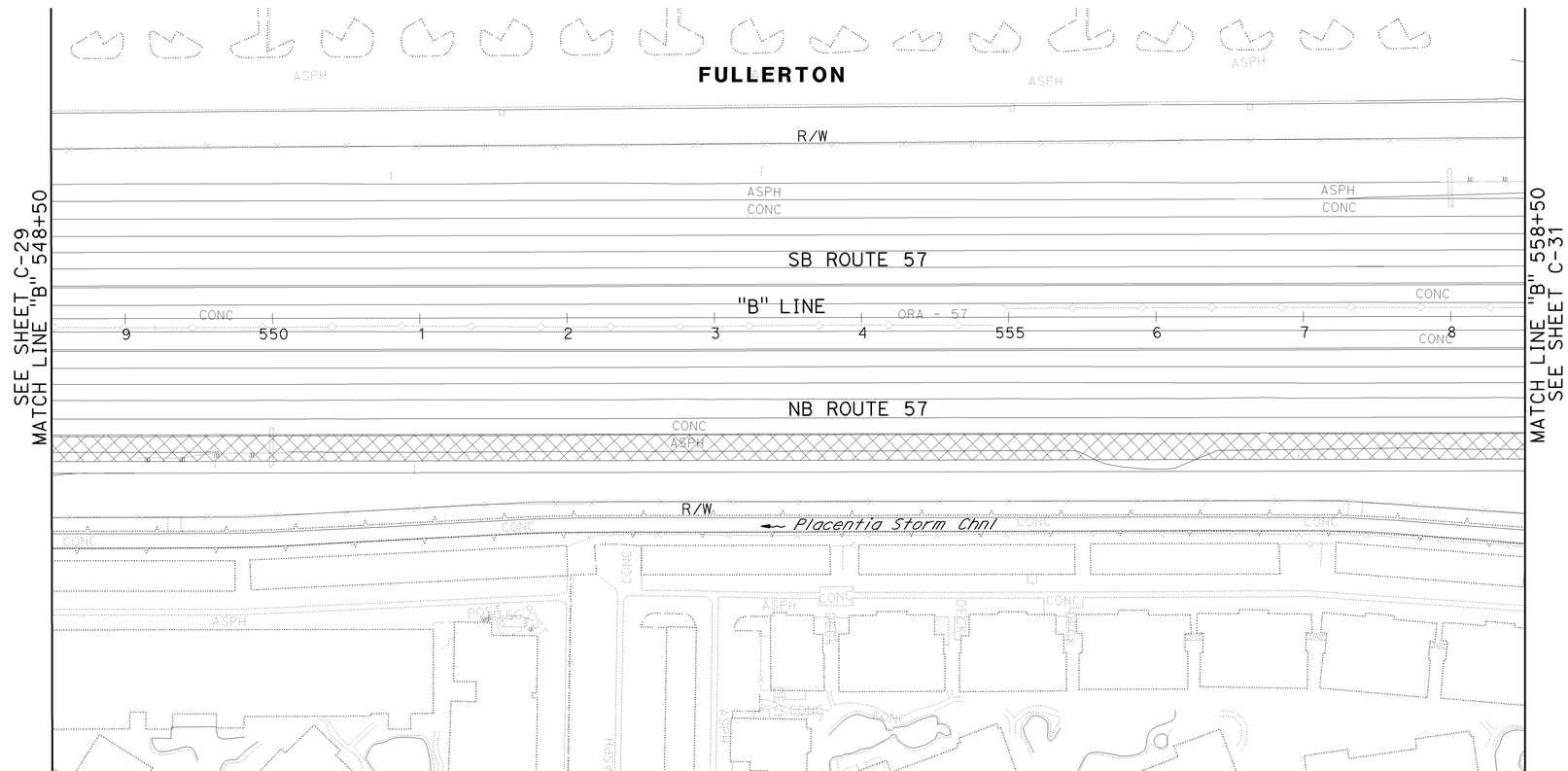

CONSTRUCTION DETAILS
(MATERIAL WITH AERIALLY DEPOSITED LEAD) (PLACEMENT)

SCALE: 1" = 50'

THIS PLAN ACCURATE FOR ADL WORK ONLY.

C-30

LAST REVISION | DATE PLOTTED => 16-DEC-2009
08-01-08 | TIME PLOTTED => 10:59

REVISED BY	DATE REVISED

CALCULATED-DESIGNED BY: REBECCA KELCHER
CHECKED BY: JOSUE VAGLIENTY
CONSULTANT FUNCTIONAL SUPERVISOR: GONZALO PEÑA
STATE OF CALIFORNIA - DEPARTMENT OF TRANSPORTATION

trpierce 16-DEC-2009 10:59
H:\pdata\10105878\CADD\TransPW\Div\Detail\c0F031ga030.dgn

BORDER LAST REVISED 4/11/2008

RELATIVE BORDER SCALE IS IN INCHES 0 1 2 3

USERNAME => trpierce
DGN FILE => c0F031ga030.dgn

CU 12220

EA 0F0311

NOTE:

FOR COMPLETE RIGHT OF WAY AND ACCURATE ACCESS DATA,
SEE RIGHT OF WAY RECORD MAPS AT DISTRICT OFFICE.

Dist	COUNTY	ROUTE	POST MILES TOTAL PROJECT	SHEET No.	TOTAL SHEETS
12	Ora	57	16.2/18.6	72	960

REGISTERED CIVIL ENGINEER — DATE 7/15/09

JOSUE J. VAGLIENTY No. 70783 Exp. 6-30-11 CIVIL — REGISTERED PROFESSIONAL ENGINEER — STATE OF CALIFORNIA

12-14-09
PLANS APPROVAL DATE

THE STATE OF CALIFORNIA OR ITS OFFICERS OR AGENTS SHALL NOT BE RESPONSIBLE FOR THE ACCURACY OR COMPLETENESS OF SCANNED COPIES OF THIS PLAN SHEET.

RBF CONSULTING
14275 ALTON PKWY
IRVINE, CA 92618

OCTA
550 S. MAIN STREET
ORANGE, CA 92863

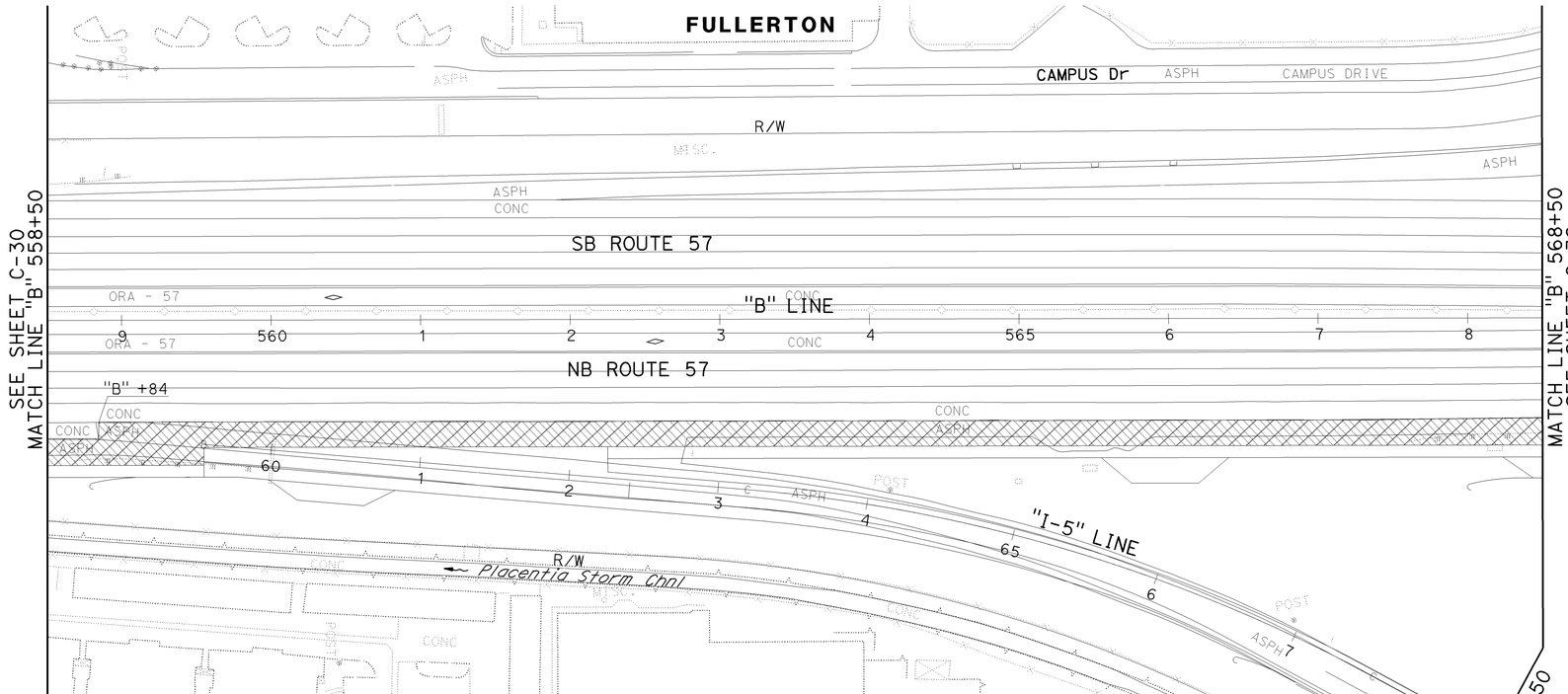

CONSTRUCTION DETAILS
(MATERIAL WITH AERIALLY DEPOSITED LEAD) (PLACEMENT)

SCALE: 1" = 50'

C-31

THIS PLAN ACCURATE FOR ADL WORK ONLY.

LAST REVISION | DATE PLOTTED => 16-DEC-2009
08-01-08 | TIME PLOTTED => 11:00

16-DEC-2009 11:00
H:\pdata\10105878\CADD\TransPW\Div\Detail\c0F031ga031.dgn
trpierce

REVISED BY	DATE REVISED
REBECCA KELCHER	
JOSUE VAGLIENTY	

CALCULATED-DESIGNED BY
CHECKED BY
CONSULTANT FUNCTIONAL SUPERVISOR
GONZALO PEÑA

STATE OF CALIFORNIA - DEPARTMENT OF TRANSPORTATION
Caltrans

BORDER LAST REVISED 4/11/2008

RELATIVE BORDER SCALE IS IN INCHES 0 1 2 3

USERNAME => trpierce
DGN FILE => c0F031ga031.dgn

CU 12220

EA 0F0311

NOTE:
FOR COMPLETE RIGHT OF WAY AND ACCURATE ACCESS DATA,
SEE RIGHT OF WAY RECORD MAPS AT DISTRICT OFFICE.

Dist	COUNTY	ROUTE	POST MILES TOTAL PROJECT	SHEET No.	TOTAL SHEETS
12	Ora	57	16.2/18.6	73	960

REGISTERED CIVIL ENGINEER — DATE 7/15/09

JOSUE J. VAGLIENTY No. 70783 Exp. 6-30-11 CIVIL — REGISTERED PROFESSIONAL ENGINEER — STATE OF CALIFORNIA

12-14-09
PLANS APPROVAL DATE

THE STATE OF CALIFORNIA OR ITS OFFICERS OR AGENTS SHALL NOT BE RESPONSIBLE FOR THE ACCURACY OR COMPLETENESS OF SCANNED COPIES OF THIS PLAN SHEET.

RBF CONSULTING
14275 ALTON PKWY
IRVINE, CA 92618

OCTA
550 S. MAIN STREET
ORANGE, CA 92863

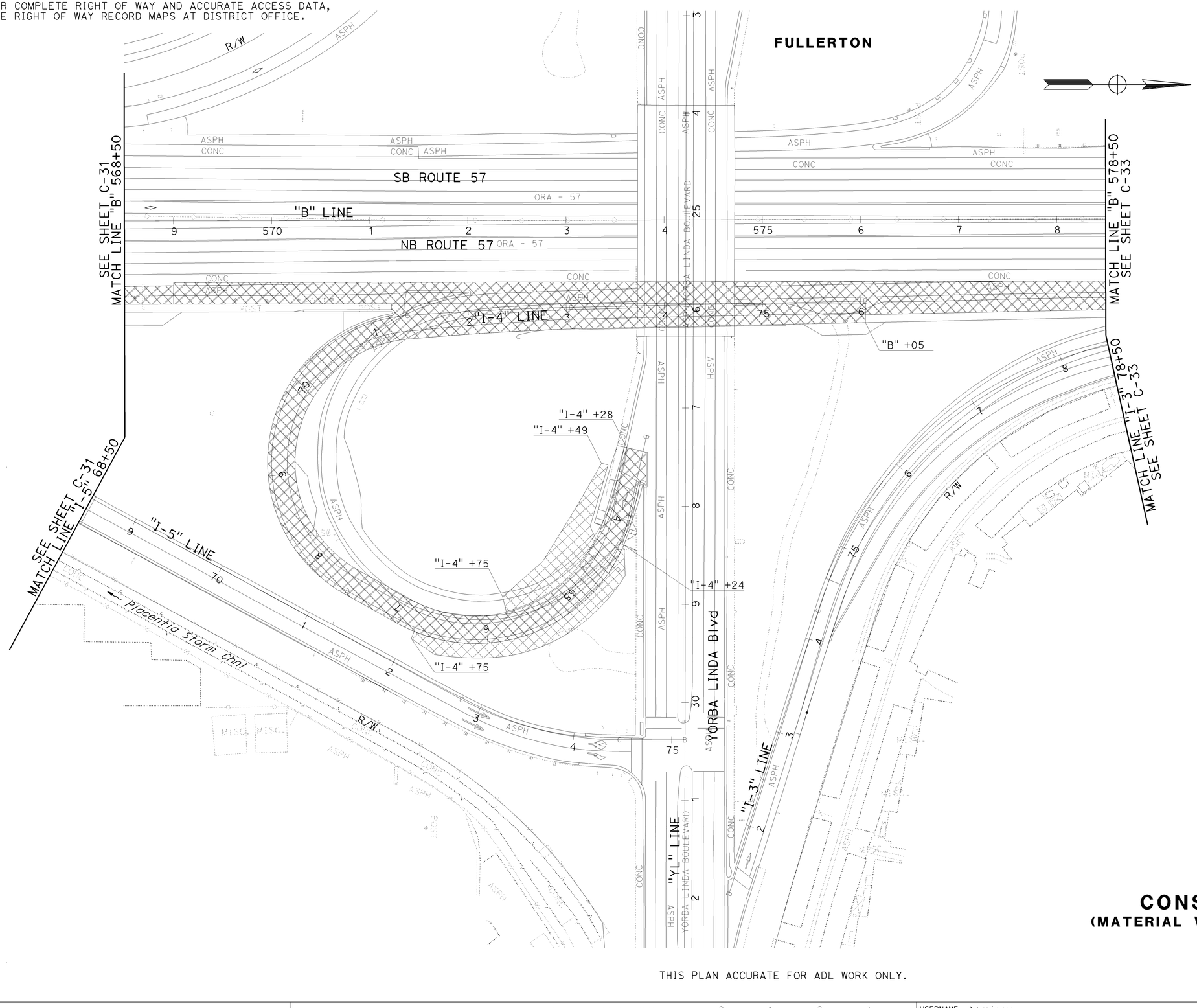

THIS PLAN ACCURATE FOR ADL WORK ONLY.

CONSTRUCTION DETAILS
(MATERIAL WITH AERIALLY DEPOSITED LEAD) (PLACEMENT)

SCALE: 1" = 50'

C-32

STATE OF CALIFORNIA - DEPARTMENT OF TRANSPORTATION
Caltrans
CONSULTANT FUNCTIONAL SUPERVISOR: GONZALO PEÑA
CALCULATED-DESIGNED BY: REBECCA KELCHER
CHECKED BY: JOSUE VAGLIENTY
REVISED BY
DATE REVISED

LAST REVISION DATE PLOTTED => 16-DEC-2009
TIME PLOTTED => 11:00

H:\pdata\10105878\CADD\TransPW\Div\Detail\c0F031ga032.dgn
16-DEC-2009 11:00
trpierce

BORDER LAST REVISED 4/11/2008
RELATIVE BORDER SCALE IS IN INCHES 0 1 2 3
USERNAME => trpierce
DGN FILE => c0F031ga032.dgn
CU 12220
EA 0F0311

NOTE:
FOR COMPLETE RIGHT OF WAY AND ACCURATE ACCESS DATA,
SEE RIGHT OF WAY RECORD MAPS AT DISTRICT OFFICE.

Dist	COUNTY	ROUTE	POST MILES TOTAL PROJECT	SHEET No.	TOTAL SHEETS
12	Ora	57	16.2/18.6	74	960

REGISTERED CIVIL ENGINEER — DATE 7/15/09

JOSUE J. VAGLIENTY No. 70783 Exp. 6-30-11 CIVIL — REGISTERED PROFESSIONAL ENGINEER — STATE OF CALIFORNIA

12-14-09
PLANS APPROVAL DATE

THE STATE OF CALIFORNIA OR ITS OFFICERS OR AGENTS SHALL NOT BE RESPONSIBLE FOR THE ACCURACY OR COMPLETENESS OF SCANNED COPIES OF THIS PLAN SHEET.

RBF CONSULTING
14275 ALTON PKWY
IRVINE, CA 92618

OCTA
550 S. MAIN STREET
ORANGE, CA 92863

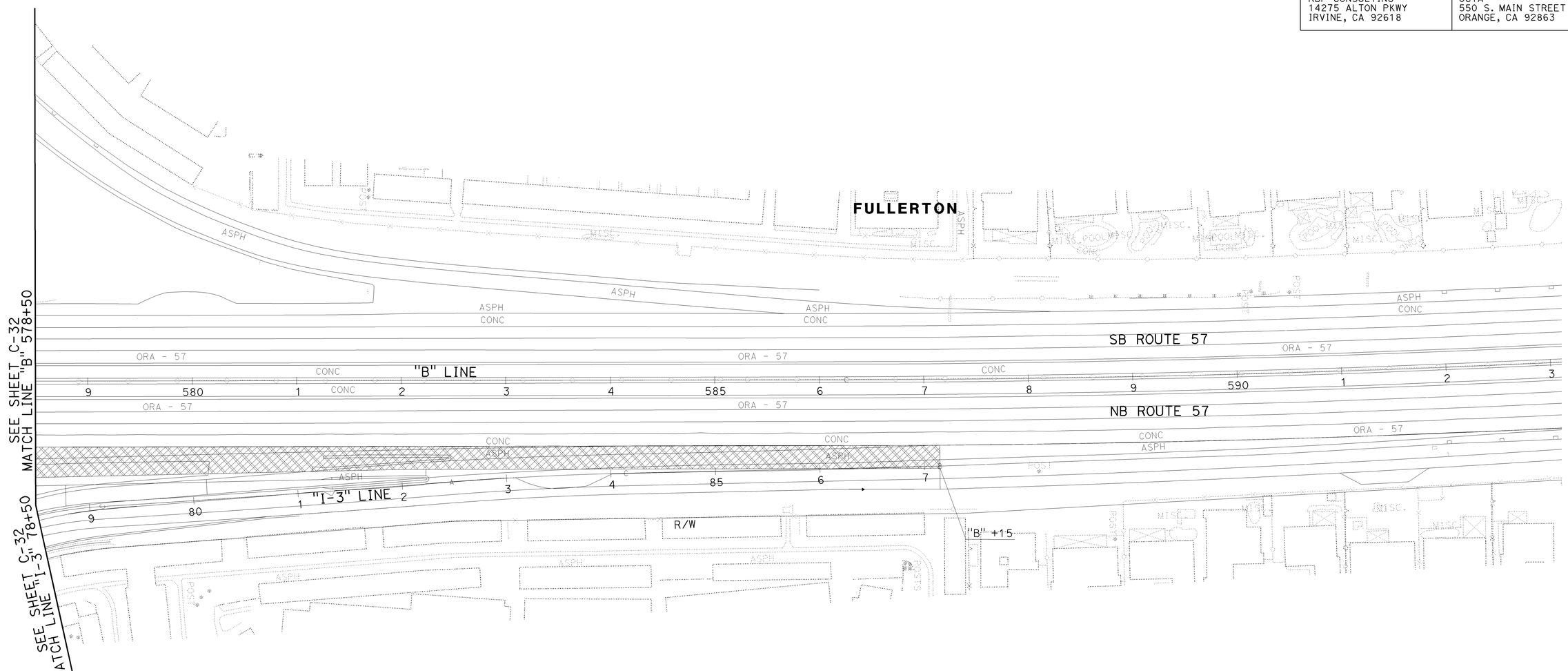

CONSTRUCTION DETAILS
(MATERIAL WITH AERIALLY DEPOSITED LEAD) (PLACEMENT)

SCALE: 1" = 50'

THIS PLAN ACCURATE FOR ADL WORK ONLY.

C-33

STATE OF CALIFORNIA - DEPARTMENT OF TRANSPORTATION	CONSULTANT FUNCTIONAL SUPERVISOR	GONZALO PEÑA	
CALCULATED-DESIGNED BY	REBECCA KELCHER		
CHECKED BY	JOSUE VAGLIENTY		
REVISED BY			
DATE REVISED			

trpierce 16-DEC-2009 11:00
H:\pdata\10105878\CADD\TransPW\Div\Detail\c0F031ga033.dgn

LAST REVISION — DATE PLOTTED => 16-DEC-2009 — TIME PLOTTED => 11:00 — 08-01-08

BORDER LAST REVISED 4/11/2008

RELATIVE BORDER SCALE IS IN INCHES 0 1 2 3

USERNAME => trpierce
DGN FILE => c0F031ga033.dgn

CU 12220

EA 0F0311

Dist	COUNTY	ROUTE	POST MILES TOTAL PROJECT	SHEET No.	TOTAL SHEETS
12	Ora	57	16.2/18.6	75	960

REGISTERED CIVIL ENGINEER 7/15/09 DATE

12-14-09
PLANS APPROVAL DATE

REGISTERED PROFESSIONAL ENGINEER JOSUE J. VAGLIENTY No. 70783 Exp. 6-30-11 CIVIL STATE OF CALIFORNIA

THE STATE OF CALIFORNIA OR ITS OFFICERS OR AGENTS SHALL NOT BE RESPONSIBLE FOR THE ACCURACY OR COMPLETENESS OF SCANNED COPIES OF THIS PLAN SHEET.

RBF CONSULTING
14275 ALTON PKWY
IRVINE, CA 92618

OCTA
550 S. MAIN STREET
ORANGE, CA 92863

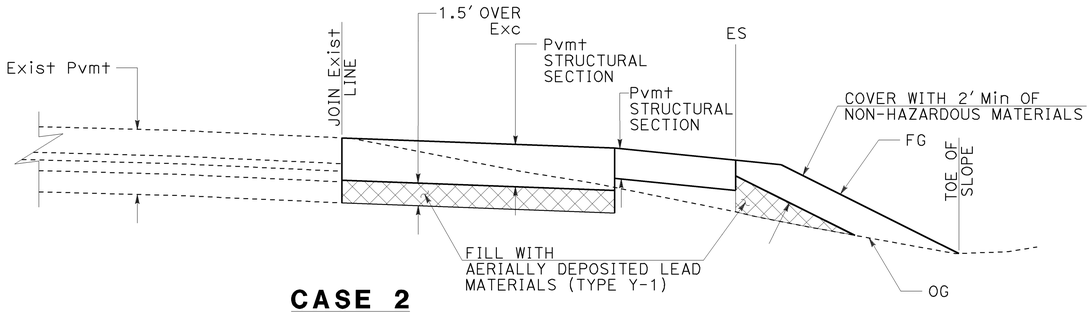

CASE 2
ROUTE 57

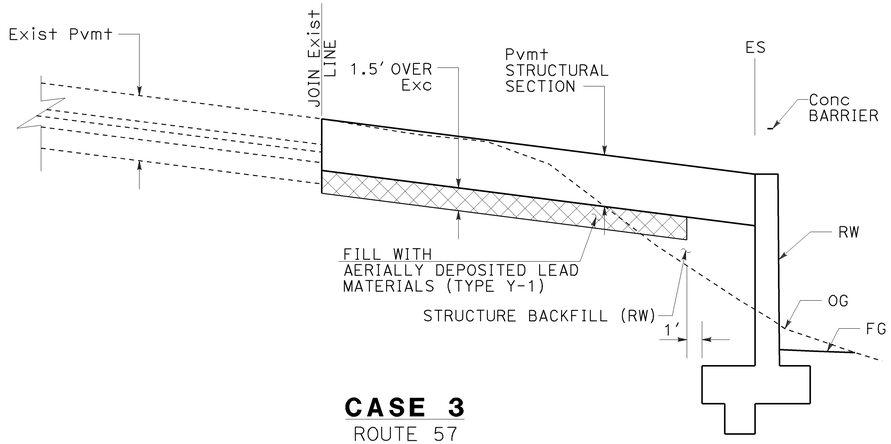

CASE 3
ROUTE 57

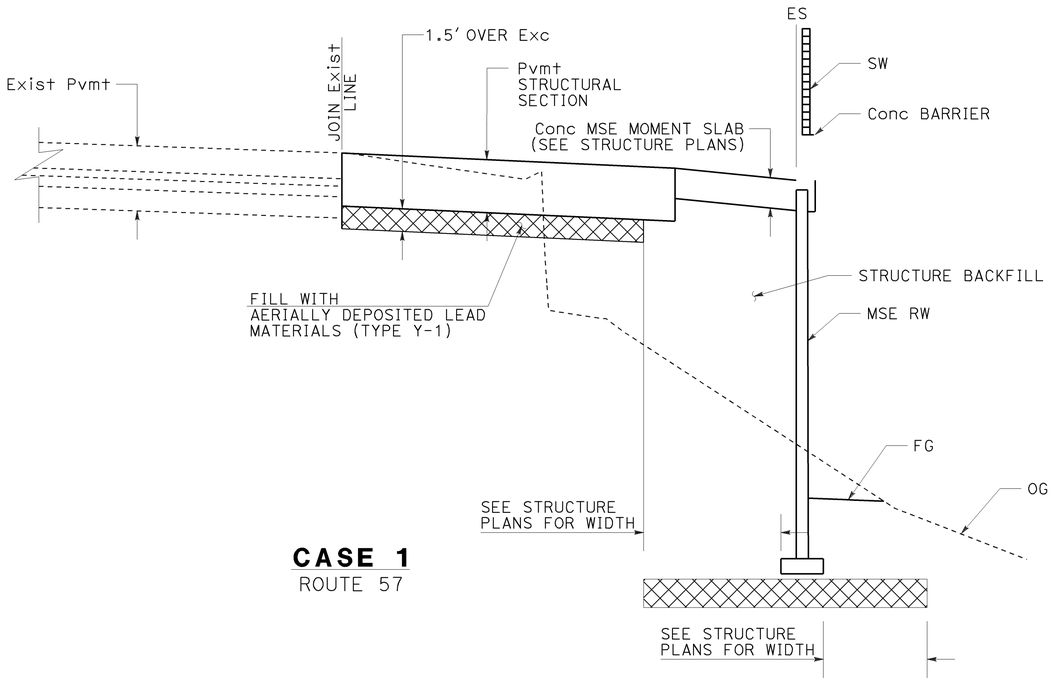

CASE 1
ROUTE 57

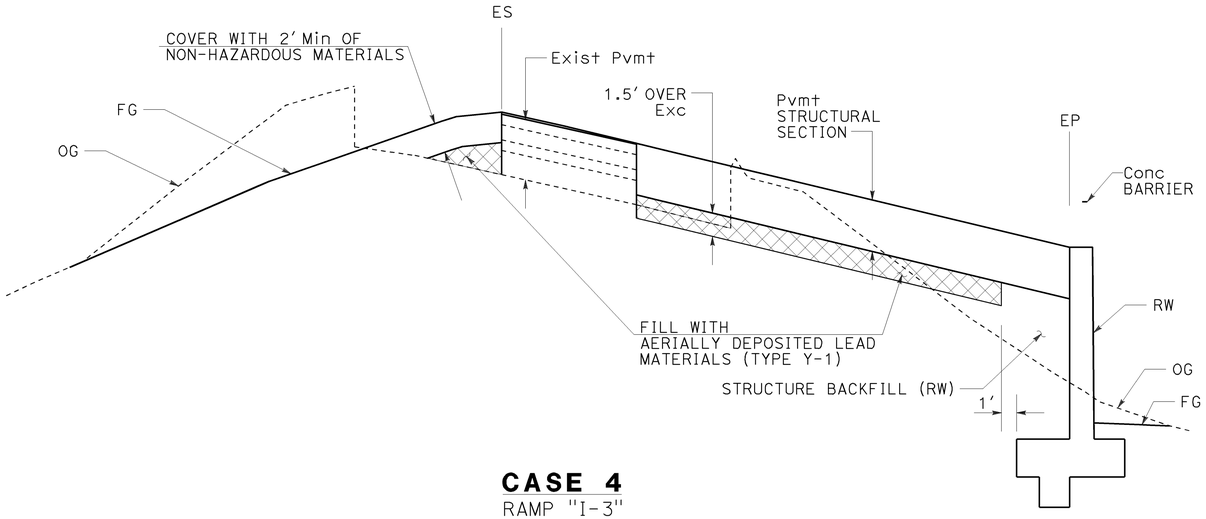

CASE 4
RAMP "I-3"

CONSTRUCTION DETAILS
(MATERIAL WITH AERIALLY DEPOSITED LEAD) (PLACEMENT)

NO SCALE

C-34

J:\PSESubmit\0F0311\c0F031ga034.dgn
STATE OF CALIFORNIA - DEPARTMENT OF TRANSPORTATION
Caltrans
CONSULTANT FUNCTIONAL SUPERVISOR: GONZALO PEÑA
CALCULATED-DESIGNED BY: REBECCA KELCHER
CHECKED BY: JOSUE VAGLIENTY
REVISED BY
DATE REVISED
trpierce 16-DEC-2009 11:00

LAST REVISION 08-01-08
DATE PLOTTED => 16-DEC-2009
TIME PLOTTED => 11:00

NOTES:

1. FOR CURB AND DIKE TRANSITIONS AND DETAILS, SEE CONSTRUCTION DETAILS SHEET C-47.
2. FOR MAINTENANCE VEHICLE (MVP) PULLOUT DETAILS, SEE CONSTRUCTION DETAILS SHEET C-48.
3. FOR STRUCTURAL PAVEMENT SECTION TYPES, SEE TYPICAL CROSS SECTIONS SHEET X-1.
4. FOR CROSS GUTTER DETAIL, SEE CONSTRUCTION DETAILS SHEET C-49.

LEGEND THIS SHEET

MINOR CONCRETE (PATTERNED)

CURVE DATA				
No.	R	Δ	T	L
30	35.00'	43°35'15"	14.00'	26.63'

Dist	COUNTY	ROUTE	POST MILES TOTAL PROJECT	SHEET No.	TOTAL SHEETS
12	Ora	57	16.2/18.6	76	960

REGISTERED CIVIL ENGINEER 12-08-09 DATE

12-14-09
PLANS APPROVAL DATE

REGISTERED PROFESSIONAL ENGINEER JOSUE J. VAGLIENTY No. 70783 Exp. 6-30-11 CIVIL STATE OF CALIFORNIA

THE STATE OF CALIFORNIA OR ITS OFFICERS OR AGENTS SHALL NOT BE RESPONSIBLE FOR THE ACCURACY OR COMPLETENESS OF SCANNED COPIES OF THIS PLAN SHEET.

RBF CONSULTING
14275 ALTON PKWY
IRVINE, CA 92618

OCTA
550 S. MAIN STREET
ORANGE, CA 92863

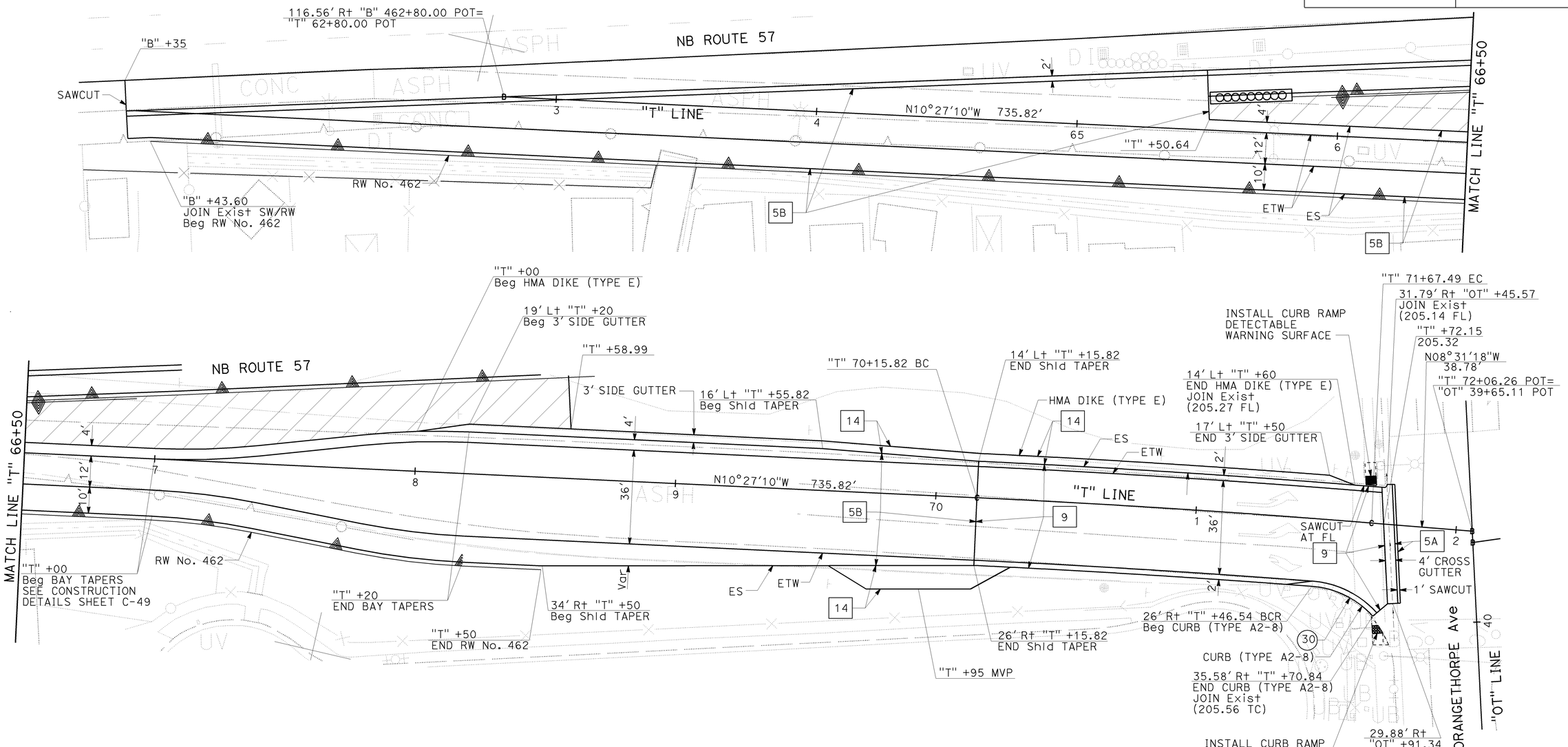

CONSTRUCTION DETAILS
(RAMP "T" DETAILS)
SCALE: 1" = 20'

C-35

STATE OF CALIFORNIA - DEPARTMENT OF TRANSPORTATION
Caltrans
CONSULTANT FUNCTIONAL SUPERVISOR: GONZALO PEÑA
CALCULATED-DESIGNED BY: SUSAN POMERLEAU
CHECKED BY: JOSUE VAGLIENTY
REVISED BY: JJV
DATE REVISED: 12/03/09

H:\pdata\10105878\Admin\submittals\2009-07-15 FINAL Electronic-Only Submittal\DGN-lenard PLOT File:c0F031ga035.dgn

LAST REVISION 12-08-09 DATE PLOTTED => 16-DEC-2009 TIME PLOTTED => 14:30

BORDER LAST REVISED 4/11/2008 | RELATIVE BORDER SCALE IS IN INCHES 0 1 2 3 | USERNAME => trlenard DGN FILE => c0F031ga035.dgn | CU 12220 | EA 0F0311

Dist	COUNTY	ROUTE	POST MILES TOTAL PROJECT	SHEET No.	TOTAL SHEETS
12	Ora	57	16.2/18.6	77	960

REGISTERED CIVIL ENGINEER — DATE 12/3/09

12-14-09
PLANS APPROVAL DATE

REGISTERED PROFESSIONAL ENGINEER — JOSUE J. VAGLIENTY No. 70783 Exp. 6-30-11 CIVIL — STATE OF CALIFORNIA

THE STATE OF CALIFORNIA OR ITS OFFICERS OR AGENTS SHALL NOT BE RESPONSIBLE FOR THE ACCURACY OR COMPLETENESS OF SCANNED COPIES OF THIS PLAN SHEET.

RBF CONSULTING
14275 ALTON PKWY
IRVINE, CA 92618

OCTA
550 S. MAIN STREET
ORANGE, CA 92863

NOTES:

1. FOR STRUCTURE INFORMATION AND DETAILS, SEE STRUCTURE PLANS.
2. FOR STRUCTURAL PAVEMENT SECTION TYPES, SEE TYPICAL CROSS SECTIONS SHEET X-1.

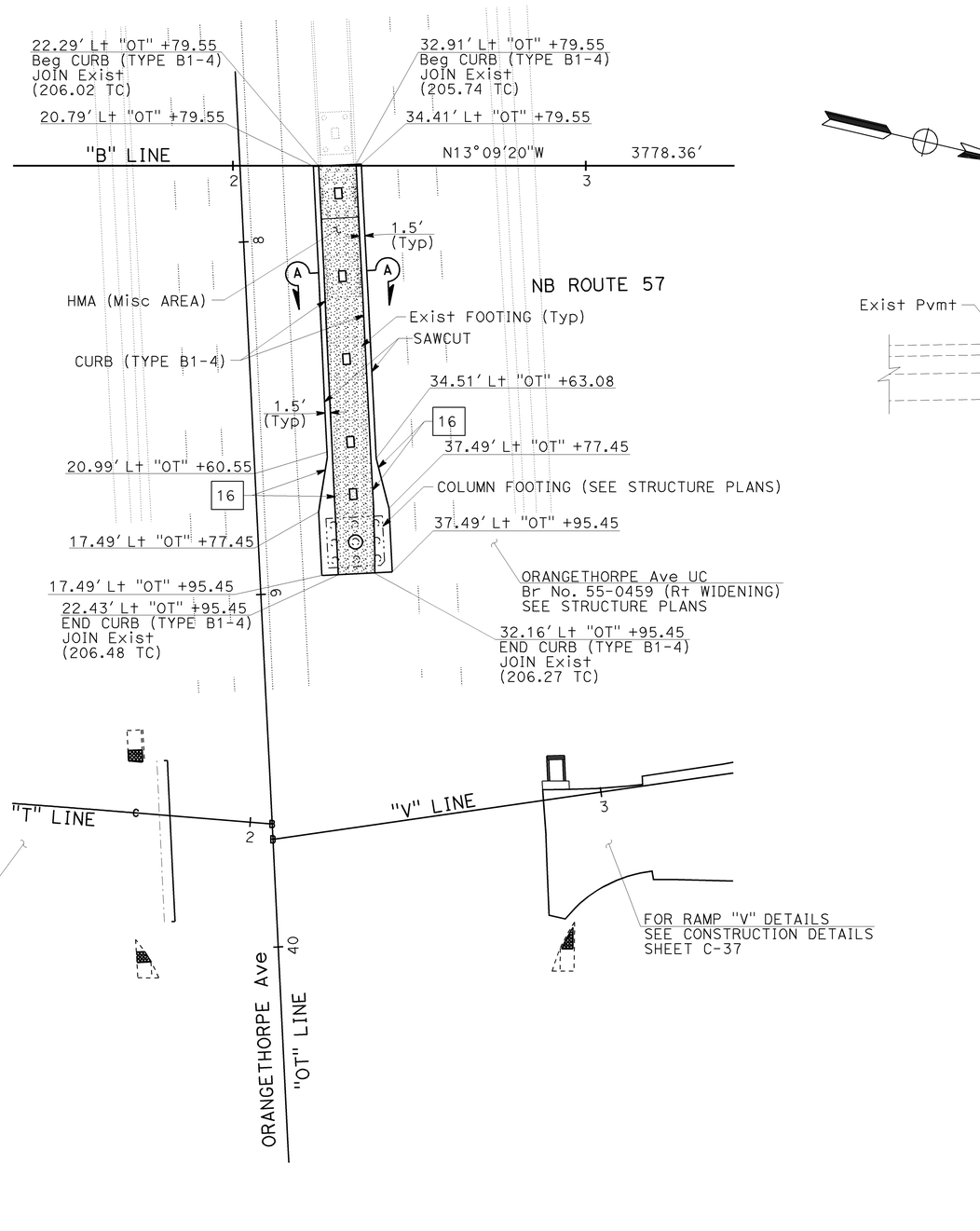

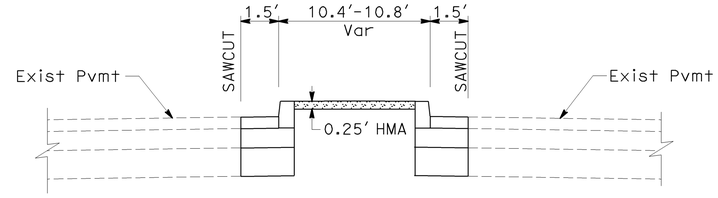

SECTION A-A
NO SCALE

LEGEND THIS SHEET

3" HMA (Misc AREA)

CONSTRUCTION DETAILS
(ORANGETHORPE Ave DETAILS)

SCALE: 1" = 20'

C-36

LAST REVISION DATE PLOTTED => 16-DEC-2009
08-01-08 TIME PLOTTED => 14:30

H:\pdata\10105878\CADD\TransPW\Div\Detail\c0F031ga036.dgn
16-DEC-2009 14:30
trlenard

CHECKED BY	CALCULATED-DESIGNED BY	REVISED BY	DATE REVISED
JOSUE VAGLIENTY	JOHN CURTIS	JJV	12/03/09

STATE OF CALIFORNIA - DEPARTMENT OF TRANSPORTATION
Caltrans
CONSULTANT FUNCTIONAL SUPERVISOR: GONZALO PEÑA

BORDER LAST REVISED 4/11/2008 | RELATIVE BORDER SCALE IS IN INCHES 0 1 2 3 | USERNAME => trlenard | DGN FILE => c0F031ga036.dgn | CU 12220 | EA 0F0311

Dist	COUNTY	ROUTE	POST MILES TOTAL PROJECT	SHEET No.	TOTAL SHEETS
12	Ora	57	16.2/18.6	78	960

REGISTERED CIVIL ENGINEER — DATE 7/15/09

12-14-09
PLANS APPROVAL DATE

REGISTERED PROFESSIONAL ENGINEER — JOSUE J. VAGLIENTY — No. 70783 — Exp. 6-30-11 — CIVIL — STATE OF CALIFORNIA

THE STATE OF CALIFORNIA OR ITS OFFICERS OR AGENTS SHALL NOT BE RESPONSIBLE FOR THE ACCURACY OR COMPLETENESS OF SCANNED COPIES OF THIS PLAN SHEET.

RBF CONSULTING
14275 ALTON PKWY
IRVINE, CA 92618

OCTA
550 S. MAIN STREET
ORANGE, CA 92863

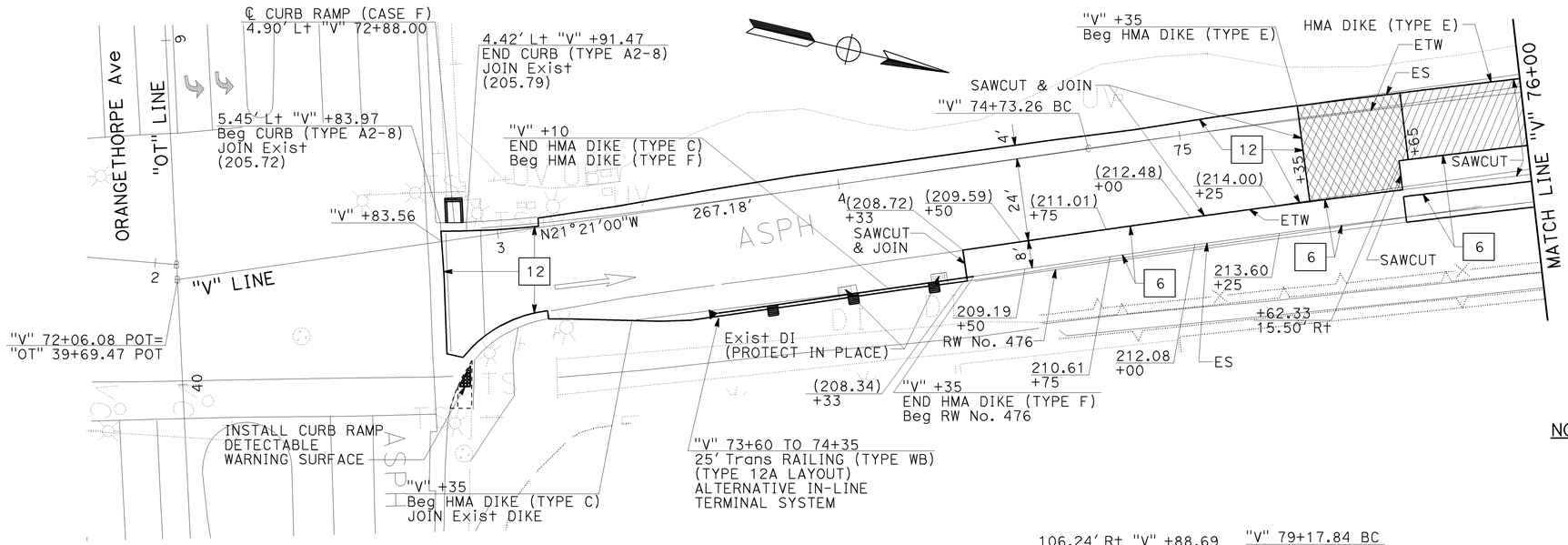

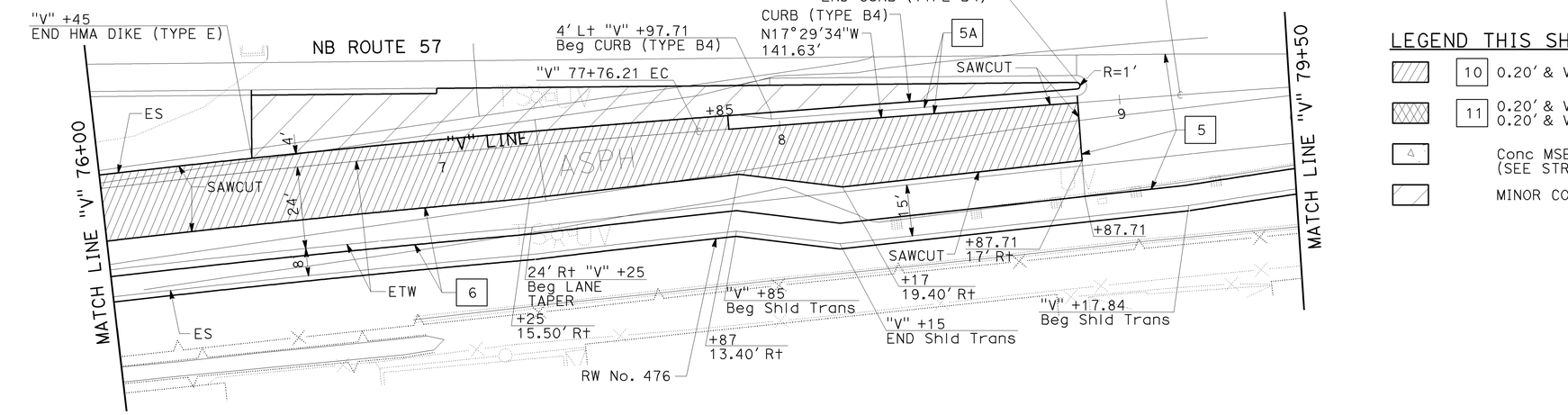

NOTES:

1. FOR CURB AND DIKE TRANSITIONS AND DETAILS, SEE CONSTRUCTION DETAILS SHEET C-47.
2. FOR STRUCTURAL PAVEMENT SECTION TYPES, SEE TYPICAL CROSS SECTIONS SHEET X-1.

LEGEND THIS SHEET

10	0.20' & Var HMA (TYPE A) OVERLAY
11	0.20' & Var COLD PLANE AC PAVEMENT 0.20' & Var HMA (TYPE A) OVERLAY
	Conc MSE MOMENT SLAB (SEE STRUCTURE PLANS)
	MINOR CONCRETE (PATTERNED)

CONSTRUCTION DETAILS
(RAMP "V" DETAILS)

SCALE: 1" = 20'

C-37

REVISED BY	DATE REVISED
JOHN CURTIS	13-APR-2010 15:58
JOSUE VAGLIENTY	

CALCULATED-DESIGNED BY: trstrk
CHECKED BY:
CONSULTANT FUNCTIONAL SUPERVISOR: GONZALO PEÑA
STATE OF CALIFORNIA - DEPARTMENT OF TRANSPORTATION
Caltrans
H:\pdata\10105878\CADD\TransPW\Div\Detail\c0F031ga037.dgn

LAST REVISION — DATE PLOTTED => 13-APR-2010 — TIME PLOTTED => 15:58 — 08-01-08

BORDER LAST REVISED 4/11/2008 | RELATIVE BORDER SCALE IS IN INCHES 0 1 2 3 | USERNAME => trstrk | DGN FILE => c0F031ga037.dgn | CU 12220 | EA 0F0311

Dist	COUNTY	ROUTE	POST MILES TOTAL PROJECT	SHEET No.	TOTAL SHEETS
12	Ora	57	16.2/18.6	79	960

REGISTERED CIVIL ENGINEER — 12/3/09 DATE

JOSUE J. VAGLIENTY No. 70783 Exp. 6-30-11 CIVIL — REGISTERED PROFESSIONAL ENGINEER — STATE OF CALIFORNIA

12-14-09
PLANS APPROVAL DATE

THE STATE OF CALIFORNIA OR ITS OFFICERS OR AGENTS SHALL NOT BE RESPONSIBLE FOR THE ACCURACY OR COMPLETENESS OF SCANNED COPIES OF THIS PLAN SHEET.

RBF CONSULTING
14275 ALTON PKWY
IRVINE, CA 92618

OCTA
550 S. MAIN STREET
ORANGE, CA 92863

NOTE: FOR STRUCTURE INFORMATION AND DETAILS, SEE STRUCTURE PLANS.

LEGEND THIS SHEET

0.25' HMA (Misc AREA)

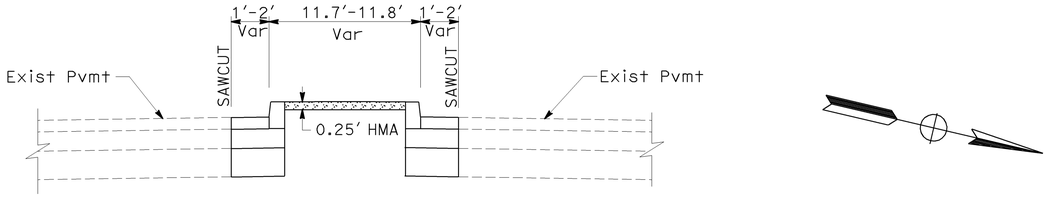

SECTION A-A
NO SCALE

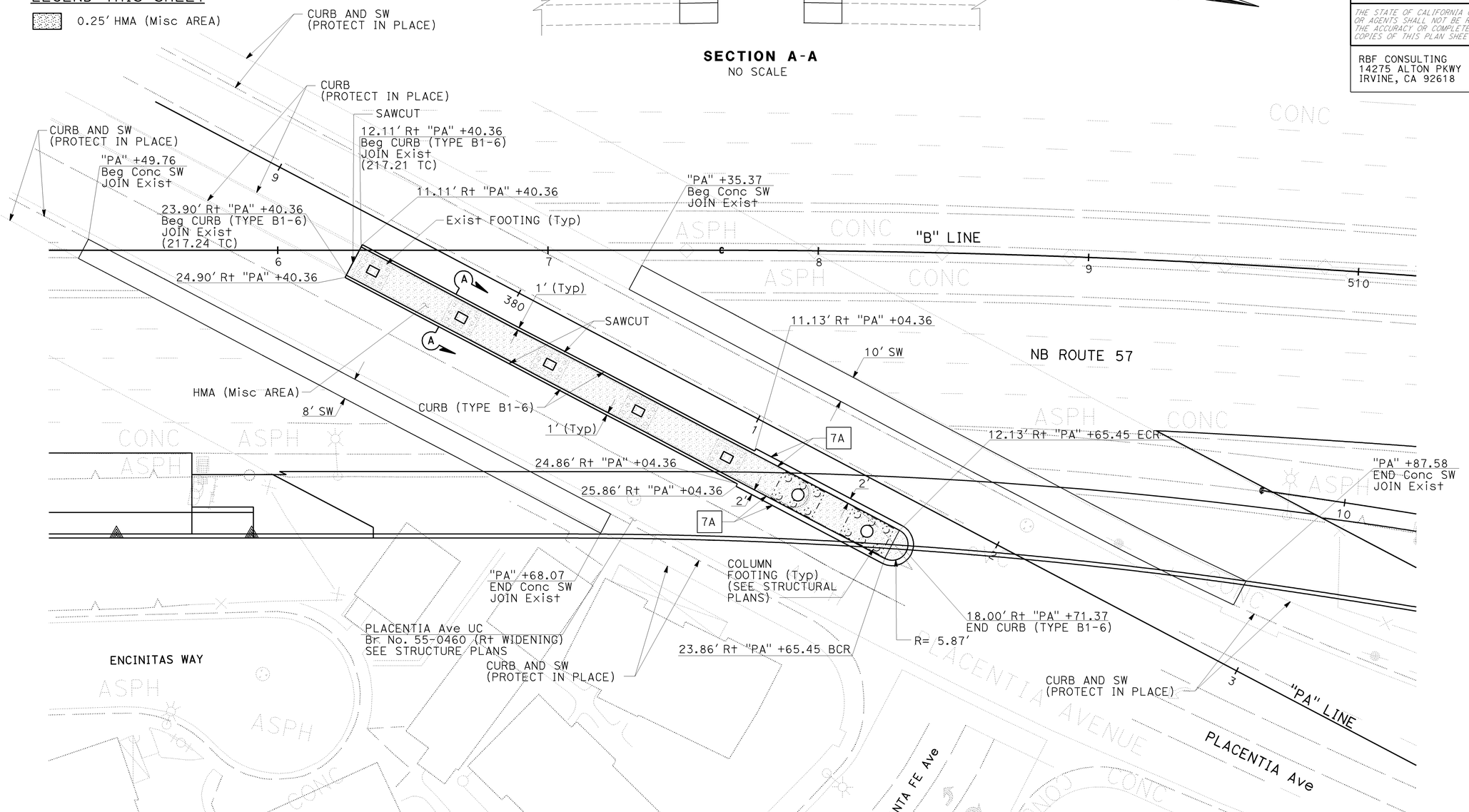

CONSTRUCTION DETAILS
(PLACENTIA Ave DETAILS)

SCALE: 1" = 20'

C-38

REVISED BY	DATE REVISED
JJV	12/03/09

CALCULATED-DESIGNED BY	CHECKED BY
JOHN CURTIS	JOSUE VAGLIENTY

CONSULTANT FUNCTIONAL SUPERVISOR: GONZALO PEÑA

STATE OF CALIFORNIA - DEPARTMENT OF TRANSPORTATION

Caltrans

LAST REVISION DATE PLOTTED => 16-DEC-2009
TIME PLOTTED => 14:30
08-01-08

J:\PSESubmit\0F0311\c0F031ga038.dgn
16-DEC-2009 14:30
trlenard

BORDER LAST REVISED 4/11/2008

RELATIVE BORDER SCALE IS IN INCHES 0 1 2 3

USERNAME => trlenard
DGN FILE => c0F031ga038.dgn

CU 12220

EA 0F0311

Dist	COUNTY	ROUTE	POST MILES TOTAL PROJECT	SHEET No.	TOTAL SHEETS
12	Ora	57	16.2/18.6	80	960

REGISTERED CIVIL ENGINEER — DATE 7/15/09

12-14-09
PLANS APPROVAL DATE

JOSUE J. VAGLIENTY No. 70783 Exp. 6-30-11 CIVIL — REGISTERED PROFESSIONAL ENGINEER — STATE OF CALIFORNIA

THE STATE OF CALIFORNIA OR ITS OFFICERS OR AGENTS SHALL NOT BE RESPONSIBLE FOR THE ACCURACY OR COMPLETENESS OF SCANNED COPIES OF THIS PLAN SHEET.

RBF CONSULTING
14275 ALTON PKWY
IRVINE, CA 92618

OCTA
550 S. MAIN STREET
ORANGE, CA 92863

NOTES:

1. FOR CURB AND DIKE TRANSITIONS AND DETAILS, SEE CONSTRUCTION DETAILS SHEET C-47.
2. FOR MAINTENANCE VEHICLE PULLOUT (MVP) DETAILS, SEE CONSTRUCTION DETAILS SHEET C-48.
3. FOR CROSS GUTTER DETAIL, SEE CONSTRUCTION DETAILS SHEET C-49.
4. FOR STRUCTURAL PAVEMENT SECTION TYPES, SEE TYPICAL CROSS SECTIONS SHEET X-1.

LEGEND THIS SHEET

MINOR CONCRETE (PATTERNED)

CURVE DATA				
No.	R	Δ	T	L
(31)	35.00′	56°33′31"	18.83′	34.55′

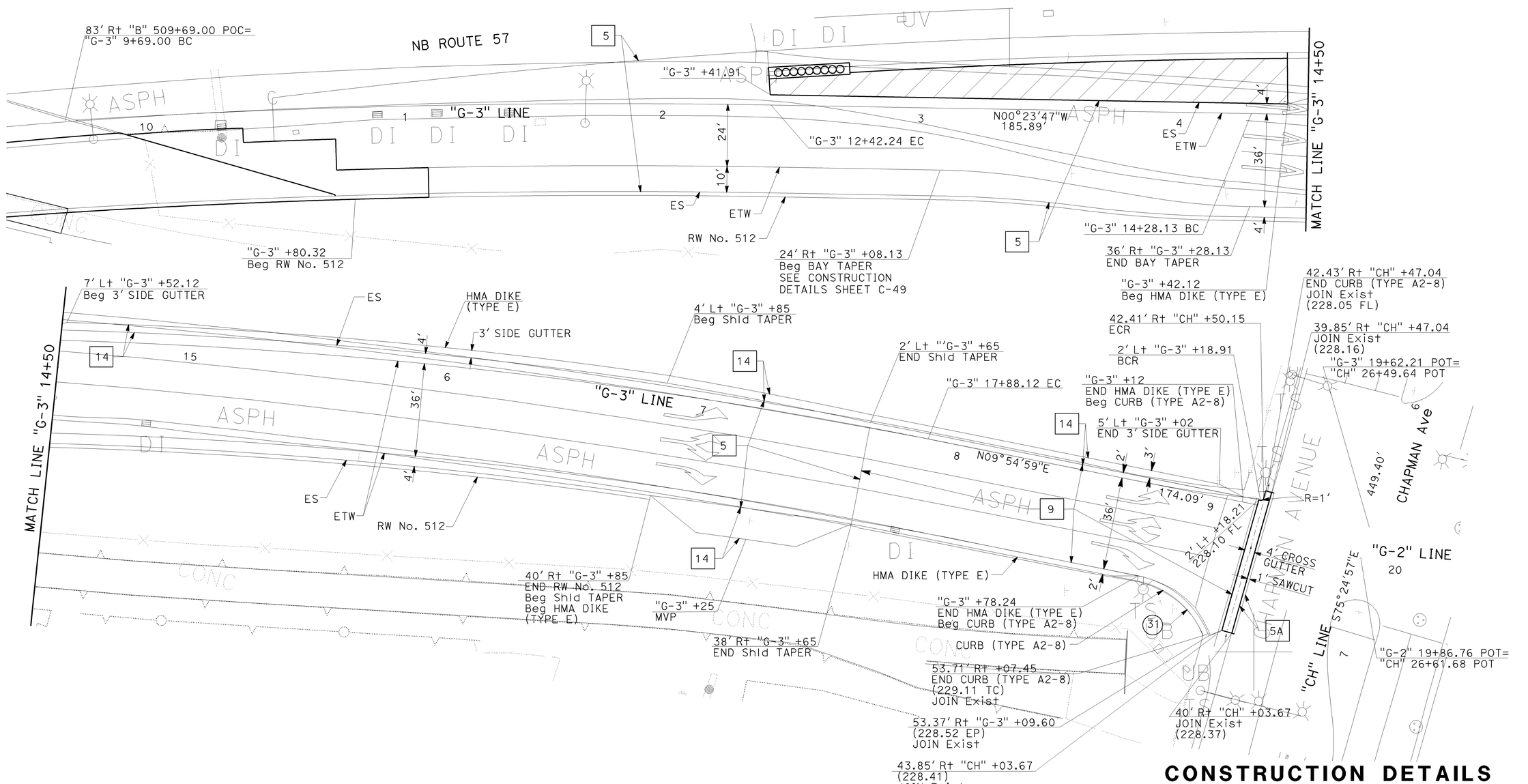

CONSTRUCTION DETAILS
(RAMP "G-3" DETAILS)

SCALE: 1" = 20′

C-39

STATE OF CALIFORNIA - DEPARTMENT OF TRANSPORTATION — Caltrans
CONSULTANT FUNCTIONAL SUPERVISOR: GONZALO PEÑA
CALCULATED-DESIGNED BY: SUSAN POMERLEAU
CHECKED BY: JOSUE VAGLIENTY
REVISED BY / DATE REVISED:
16-DEC-2009 14:30 trlenard
H:\pdata\10105878\CADD\TransPW\Div\Detail\c0F031ga039.dgn

LAST REVISION — DATE PLOTTED => 16-DEC-2009 / TIME PLOTTED => 14:30 / 08-01-08

BORDER LAST REVISED 4/11/2008 | RELATIVE BORDER SCALE IS IN INCHES (0 1 2 3) | USERNAME => trlenard | DGN FILE => c0F031ga039.dgn | CU 12220 | EA 0F0311

Dist	COUNTY	ROUTE	POST MILES TOTAL PROJECT	SHEET No.	TOTAL SHEETS
12	Ora	57	16.2/18.6	81	960

REGISTERED CIVIL ENGINEER — 12-08-09 DATE

JOSUE J. VAGLIENTY No. 70783 Exp. 6-30-11 CIVIL — REGISTERED PROFESSIONAL ENGINEER — STATE OF CALIFORNIA

12-14-09
PLANS APPROVAL DATE

THE STATE OF CALIFORNIA OR ITS OFFICERS OR AGENTS SHALL NOT BE RESPONSIBLE FOR THE ACCURACY OR COMPLETENESS OF SCANNED COPIES OF THIS PLAN SHEET.

RBF CONSULTING
14275 ALTON PKWY
IRVINE, CA 92618

OCTA
550 S. MAIN STREET
ORANGE, CA 92863

83' Rt "B" 522+65.00 POT=
"H-1" 22+65.00 POT

NB ROUTE 57

"B" 520+77.84
Beg RW No. 522

+5.69

RW No. 522

"H-1" LINE

N06°07'04"E 547.17'

ETW

ES

MATCH LINE "H-1" 25+50

"H-1" +70.63
Beg BAY TAPER
SEE CONSTRUCTION
DETAILS SHEET C-49

"H-1" +95

"H-1" +90.63
END BAY TAPER

16.03 Lt "H-1" +12.19
Beg CURB (TYPE B2-2 Mod)

"H-1" +02.20

CURB (TYPE B2-2 Mod)

14' Lt "H-1" +00
END Shld TAPER

16' Lt "H-1" +25
Beg Shld TAPER

"H-1" +91.26

"H-1" 30+21.26 EC
END CURB (TYPE B2-2 Mod)
END HMA (Misc AREA)
JOIN Exist
(235.05)

SAWCUT

SAWCUT & JOIN

RW No. 526

+73.29

"G-2" +73.07

RW No. 522

"G-2" LINE

N06°07'04"E 547.17'

+31

+03

20' Rt "H-1" +45
Beg Shld TAPER

"H-1" 28+12.17 BC

"H-1" +65
END RW No. 522

Exist CURB
(PROTECT IN PLACE)

13.66 Rt "H-1" +75
Beg CURB (TYPE B2-2 Mod)

14' Rt "H-1" +25
END Shld TAPER

"G-2" +24.53

MATCH LINE "H-1" 30+50

N08°46'48"E 441.26'

"H-1" 34+62.52 POT=
"NA" 114+40.43 POC

Exist CURB RAMP
(PROTECT IN PLACE)

"H-1" +18.96

"NA" LINE

"G-2" +23.21

N08°46'48"E 177.54'

"G-2" 32+89.00 EC

Exist CURB RAMP
(PROTECT IN PLACE)

"G-2" 34+66.54 POT=
"NA" 114+64.44 POC

NUTWOOD Ave

NOTES:

1. FOR CURB AND DIKE TRANSITIONS AND DETAILS, SEE CONSTRUCTION DETAILS SHEET C-47.
2. FOR STRUCTURAL PAVEMENT SECTION TYPES, SEE TYPICAL CROSS SECTIONS SHEET X-1.

LEGEND THIS SHEET

- 10 — 0.20' & Var HMA (TYPE A) OVERLAY
- 11 — 0.20' & Var COLD PLANE AC PAVEMENT 0.20' & Var HMA (TYPE A) OVERLAY
- MINOR CONCRETE (PATTERNED)

CONSTRUCTION DETAILS
(RAMP "H-1" DETAILS)

SCALE: 1" = 20'

C-40

REVISED BY	DATE REVISED
JJV	12/03/09

CALCULATED-DESIGNED BY	CHECKED BY
JOHN CURTIS	JOSUE VAGLIENTY

CONSULTANT FUNCTIONAL SUPERVISOR

STATE OF CALIFORNIA - DEPARTMENT OF TRANSPORTATION

Caltrans

J:\d0F031\mainline\4_RBF revision1\c0F031ga040.dgn

trlenard 16-DEC-2009 14:30

LAST REVISION 12-08-09
DATE PLOTTED => 16-DEC-2009
TIME PLOTTED => 14:30

BORDER LAST REVISED 4/11/2008

RELATIVE BORDER SCALE IS IN INCHES 0 1 2 3

USERNAME => trlenard
DGN FILE => c0F031ga040.dgn

CU 12220

EA 0F0311

Dist	COUNTY	ROUTE	POST MILES TOTAL PROJECT	SHEET No.	TOTAL SHEETS
12	Ora	57	16.2/18.6	82	960

12/8/09
REGISTERED CIVIL ENGINEER DATE

JOSUE J. VAGLIENTY No. 70783 Exp. 6-30-11 CIVIL
REGISTERED PROFESSIONAL ENGINEER * STATE OF CALIFORNIA *

12-14-09
PLANS APPROVAL DATE

THE STATE OF CALIFORNIA OR ITS OFFICERS OR AGENTS SHALL NOT BE RESPONSIBLE FOR THE ACCURACY OR COMPLETENESS OF SCANNED COPIES OF THIS PLAN SHEET.

RBF CONSULTING
14275 ALTON PKWY
IRVINE, CA 92618

OCTA
550 S. MAIN STREET
ORANGE, CA 92863

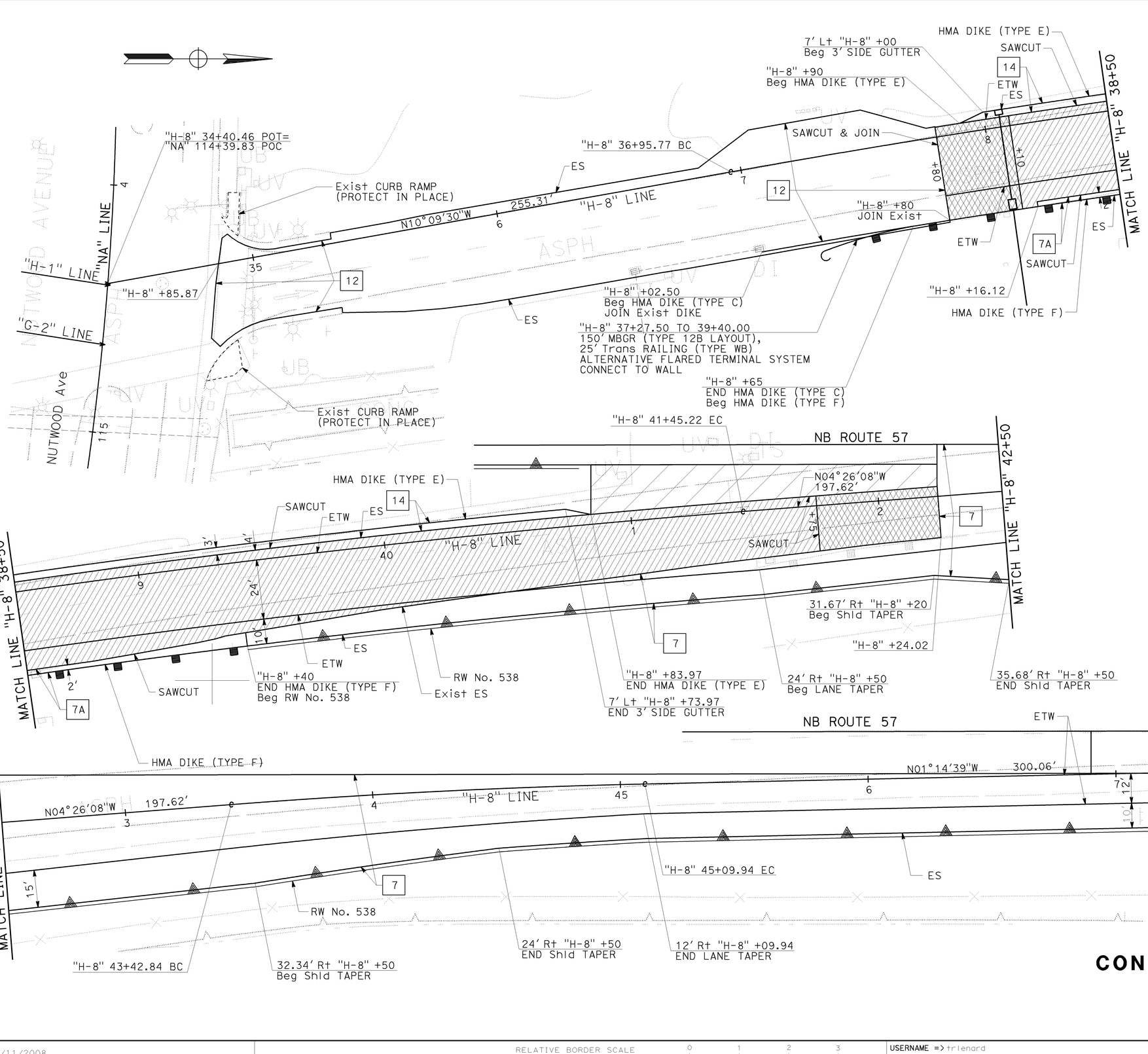

NOTES:

1. FOR CURB AND DIKE TRANSITIONS AND DETAILS, SEE CONSTRUCTION DETAILS SHEET C-47.
2. FOR STRUCTURAL PAVEMENT SECTION TYPES, SEE TYPICAL CROSS SECTIONS SHEET X-1.

LEGEND THIS SHEET

- 10 — 0.20' & Var HMA (TYPE A) OVERLAY
- 11 — 0.20' & Var COLD PLANE AC PAVEMENT 0.20' & Var HMA (TYPE A) OVERLAY
- MINOR CONCRETE (PATTERNED)

CONSTRUCTION DETAILS
(RAMP "H-8" DETAILS)
SCALE: 1" = 20'

C-41

J:\d0F031\mainline\4_RBF revision1\c0F031ga041.dgn
16-DEC-2009 14:31
trlenard

CALCULATED-DESIGNED BY	CHECKED BY	REVISED BY	DATE REVISED
JOHN CURTIS	JOSUE VAGLIENTY	JJV	12/03/09

CONSULTANT FUNCTIONAL SUPERVISOR

STATE OF CALIFORNIA - DEPARTMENT OF TRANSPORTATION
Caltrans

LAST REVISION => DATE PLOTTED => 16-DEC-2009
12-08-09 TIME PLOTTED => 14:31

BORDER LAST REVISED 4/11/2008 | RELATIVE BORDER SCALE IS IN INCHES 0 1 2 3 | USERNAME => trlenard DGN FILE => c0F031ga041.dgn | CU 12220 | EA 0F0311

Dist	COUNTY	ROUTE	POST MILES TOTAL PROJECT	SHEET No.	TOTAL SHEETS
12	Ora	57	16.2/18.6	83	960

REGISTERED CIVIL ENGINEER — DATE 7/15/09

12-14-09
PLANS APPROVAL DATE

REGISTERED PROFESSIONAL ENGINEER — JOSUE J. VAGLIENTY — No. 70783 — Exp. 6-30-11 — CIVIL — STATE OF CALIFORNIA

THE STATE OF CALIFORNIA OR ITS OFFICERS OR AGENTS SHALL NOT BE RESPONSIBLE FOR THE ACCURACY OR COMPLETENESS OF SCANNED COPIES OF THIS PLAN SHEET.

RBF CONSULTING
14275 ALTON PKWY
IRVINE, CA 92618

OCTA
550 S. MAIN STREET
ORANGE, CA 92863

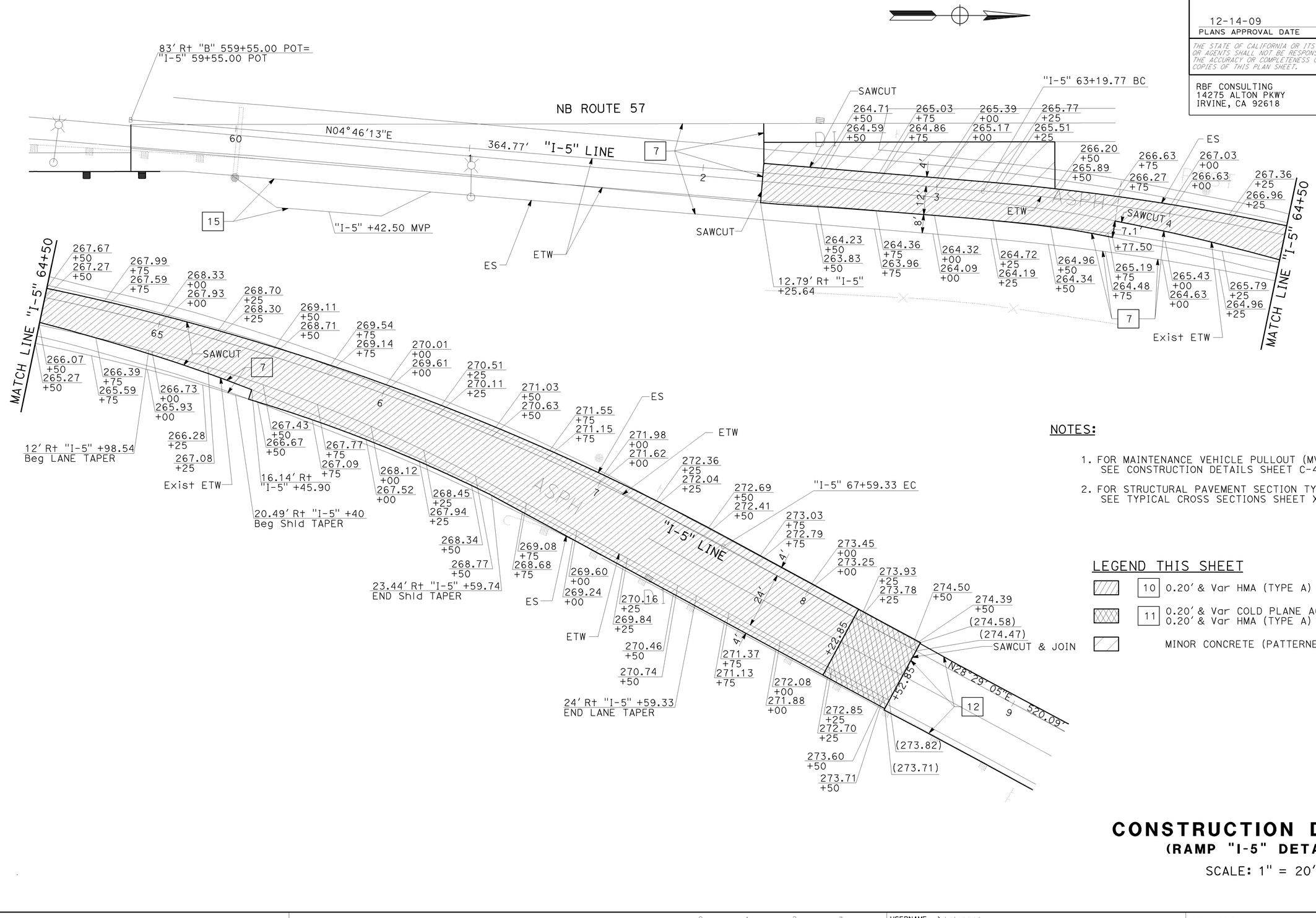

NOTES:

1. FOR MAINTENANCE VEHICLE PULLOUT (MVP) DETAILS, SEE CONSTRUCTION DETAILS SHEET C-48.
2. FOR STRUCTURAL PAVEMENT SECTION TYPES, SEE TYPICAL CROSS SECTIONS SHEET X-1.

LEGEND THIS SHEET

- 10 — 0.20' & Var HMA (TYPE A) OVERLAY
- 11 — 0.20' & Var COLD PLANE AC PAVEMENT; 0.20' & Var HMA (TYPE A) OVERLAY
- MINOR CONCRETE (PATTERNED)

CONSTRUCTION DETAILS
(RAMP "I-5" DETAILS)

SCALE: 1" = 20'

C-42

REVISED BY | DATE REVISED

CALCULATED-DESIGNED BY | CHECKED BY

CONSULTANT FUNCTIONAL SUPERVISOR

STATE OF CALIFORNIA - DEPARTMENT OF TRANSPORTATION

Caltrans

H:\pdata\10105878\CADD\TransPW\Div\Detail\c0F031ga042.dgn

16-DEC-2009 14:31

trlenard

LAST REVISION 08-01-08 | DATE PLOTTED => 16-DEC-2009 | TIME PLOTTED => 14:31

BORDER LAST REVISED 4/11/2008 | RELATIVE BORDER SCALE IS IN INCHES 0 1 2 3 | USERNAME => trlenard | DGN FILE => c0F031ga042.dgn | CU 12220 | EA 0F0311

Dist	COUNTY	ROUTE	POST MILES TOTAL PROJECT	SHEET No.	TOTAL SHEETS
12	Ora	57	16.2/18.6	84	960

7/15/09
REGISTERED CIVIL ENGINEER DATE

12-14-09
PLANS APPROVAL DATE

REGISTERED PROFESSIONAL ENGINEER
JOSUE J. VAGLIENTY
No. 70783
Exp. 6-30-11
CIVIL
STATE OF CALIFORNIA

THE STATE OF CALIFORNIA OR ITS OFFICERS OR AGENTS SHALL NOT BE RESPONSIBLE FOR THE ACCURACY OR COMPLETENESS OF SCANNED COPIES OF THIS PLAN SHEET.

RBF CONSULTING
14275 ALTON PKWY
IRVINE, CA 92618

OCTA
550 S. MAIN STREET
ORANGE, CA 92863

NOTES:

1. FOR CURB AND DIKE TRANSITIONS AND DETAILS, SEE CONSTRUCTION DETAILS SHEET C-47.
2. FOR STRUCTURAL PAVEMENT SECTION TYPES, SEE TYPICAL CROSS SECTIONS SHEET X-1.

LEGEND THIS SHEET

MINOR CONCRETE (PATTERNED)

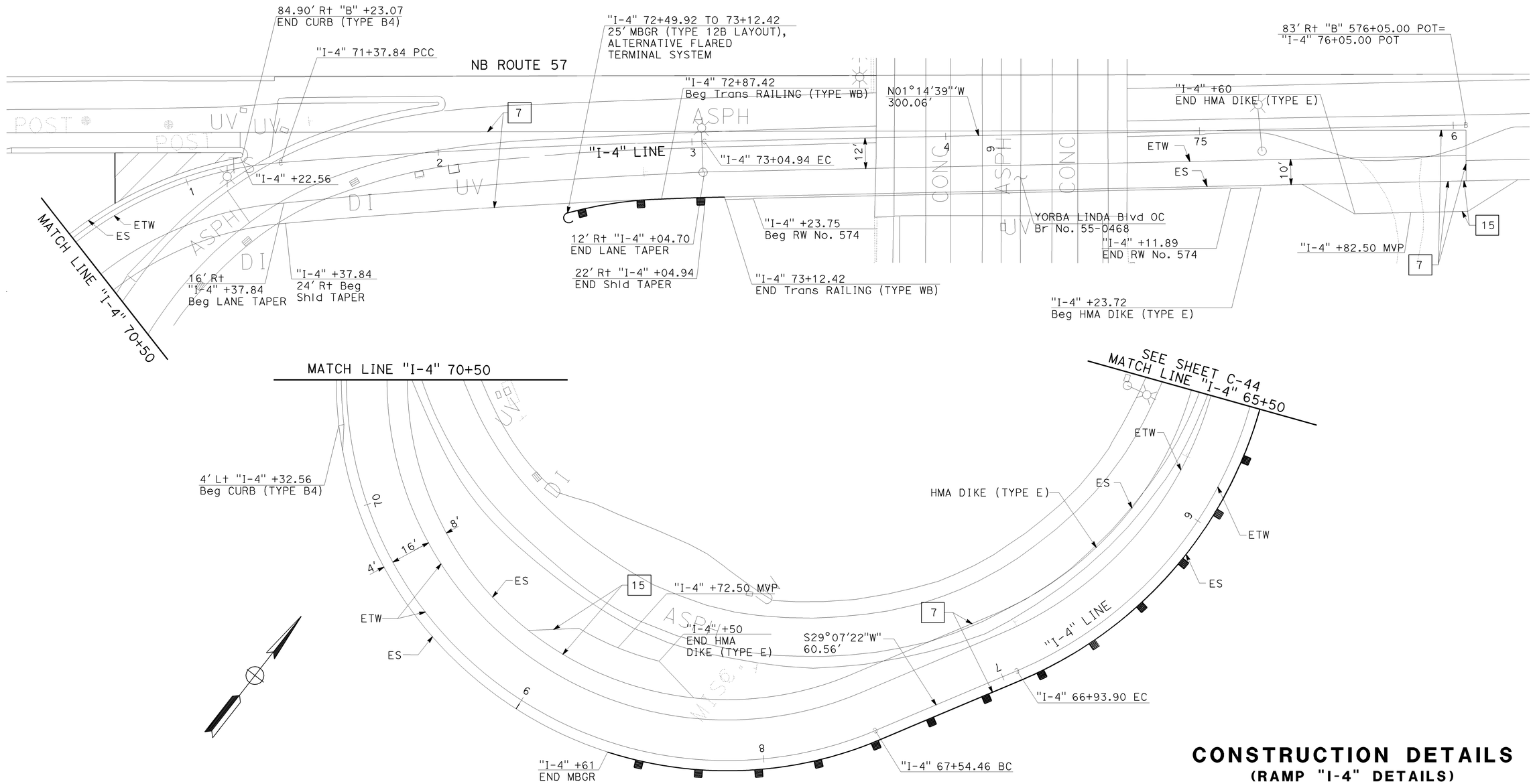

CONSTRUCTION DETAILS
(RAMP "I-4" DETAILS)

SCALE: 1" = 20'

C-43

REVISED BY	DATE REVISED

CALCULATED-DESIGNED BY: SUSAN POMERLEAU
CHECKED BY: JOSUE VAGLIENTY
CONSULTANT FUNCTIONAL SUPERVISOR: GONZALO PEÑA

STATE OF CALIFORNIA - DEPARTMENT OF TRANSPORTATION
Caltrans

LAST REVISION DATE PLOTTED => 16-DEC-2009
TIME PLOTTED => 14:31
08-01-08

H:\pdata\10105878\CADD\TransPW\Div\Detail\c0F031ga043.dgn
trlenard 16-DEC-2009 14:31

BORDER LAST REVISED 4/11/2008

RELATIVE BORDER SCALE IS IN INCHES 0 1 2 3

USERNAME => trlenard
DGN FILE => c0F031ga043.dgn

CU 12220

EA 0F0311

Dist	COUNTY	ROUTE	POST MILES TOTAL PROJECT	SHEET No.	TOTAL SHEETS
12	Ora	57	16.2/18.6	85	960

REGISTERED CIVIL ENGINEER 7/15/09 DATE

12-14-09
PLANS APPROVAL DATE

REGISTERED PROFESSIONAL ENGINEER JOSUE J. VAGLIENTY No. 70783 Exp. 6-30-11 CIVIL STATE OF CALIFORNIA

THE STATE OF CALIFORNIA OR ITS OFFICERS OR AGENTS SHALL NOT BE RESPONSIBLE FOR THE ACCURACY OR COMPLETENESS OF SCANNED COPIES OF THIS PLAN SHEET.

RBF CONSULTING
14275 ALTON PKWY
IRVINE, CA 92618

OCTA
550 S. MAIN STREET
ORANGE, CA 92863

NOTES:

1. FOR CURB AND DIKE TRANSITIONS AND DETAILS, SEE CONSTRUCTION DETAILS SHEET C-47.
2. FOR CURB RAMP DETAILS, SEE CONSTRUCTION DETAIL SHEET C-49.
3. FOR STRUCTURAL PAVEMENT SECTION TYPES, SEE TYPICAL CROSS SECTIONS SHEET X-1.

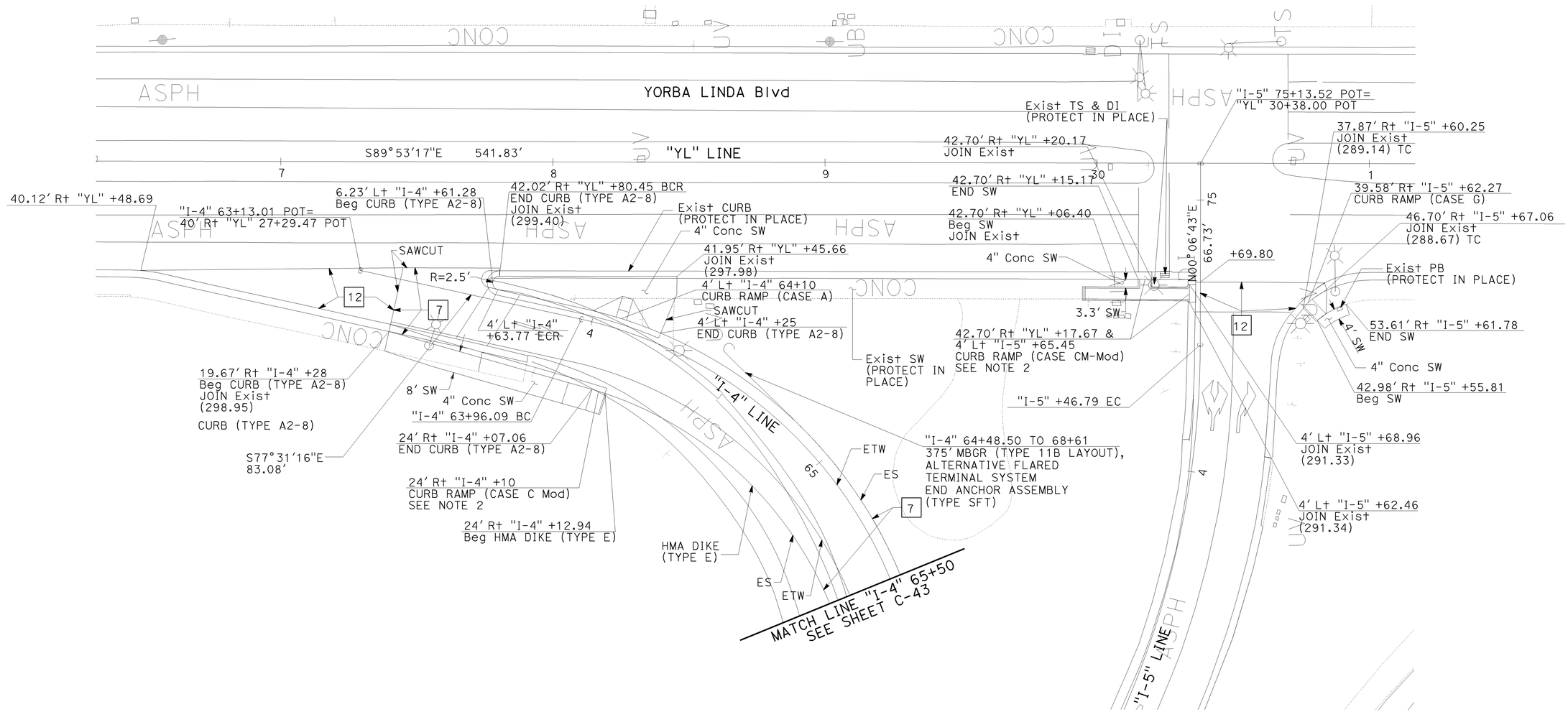

CONSTRUCTION DETAILS
(YORBA LINDA Blvd DETAILS)

SCALE: 1" = 20'

C-44

STATE OF CALIFORNIA - DEPARTMENT OF TRANSPORTATION
Caltrans

CONSULTANT FUNCTIONAL SUPERVISOR: GONZALO PEÑA
CALCULATED-DESIGNED BY: SUSAN POMERLEAU
CHECKED BY: JOSUE VAGLIENTY
REVISED BY
DATE REVISED

H:\pdata\10105878\CADD\TransPW\Div\Detail\c0F031ga044.dgn
trlenard 16-DEC-2009 14:31

LAST REVISION 08-01-08
DATE PLOTTED => 16-DEC-2009
TIME PLOTTED => 14:31

BORDER LAST REVISED 4/11/2008
RELATIVE BORDER SCALE IS IN INCHES 0 1 2 3
USERNAME => trlenard
DGN FILE => c0F031ga044.dgn
CU 12220
EA 0F0311

Dist	COUNTY	ROUTE	POST MILES TOTAL PROJECT	SHEET No.	TOTAL SHEETS
12	Ora	57	16.2/18.6	86	960

REGISTERED CIVIL ENGINEER — DATE 12/8/09

JOSUE J. VAGLIENTY No. 70783 Exp. 6-30-11 CIVIL — REGISTERED PROFESSIONAL ENGINEER — STATE OF CALIFORNIA

12-14-09
PLANS APPROVAL DATE

THE STATE OF CALIFORNIA OR ITS OFFICERS OR AGENTS SHALL NOT BE RESPONSIBLE FOR THE ACCURACY OR COMPLETENESS OF SCANNED COPIES OF THIS PLAN SHEET.

RBF CONSULTING
14275 ALTON PKWY
IRVINE, CA 92618

OCTA
550 S. MAIN STREET
ORANGE, CA 92863

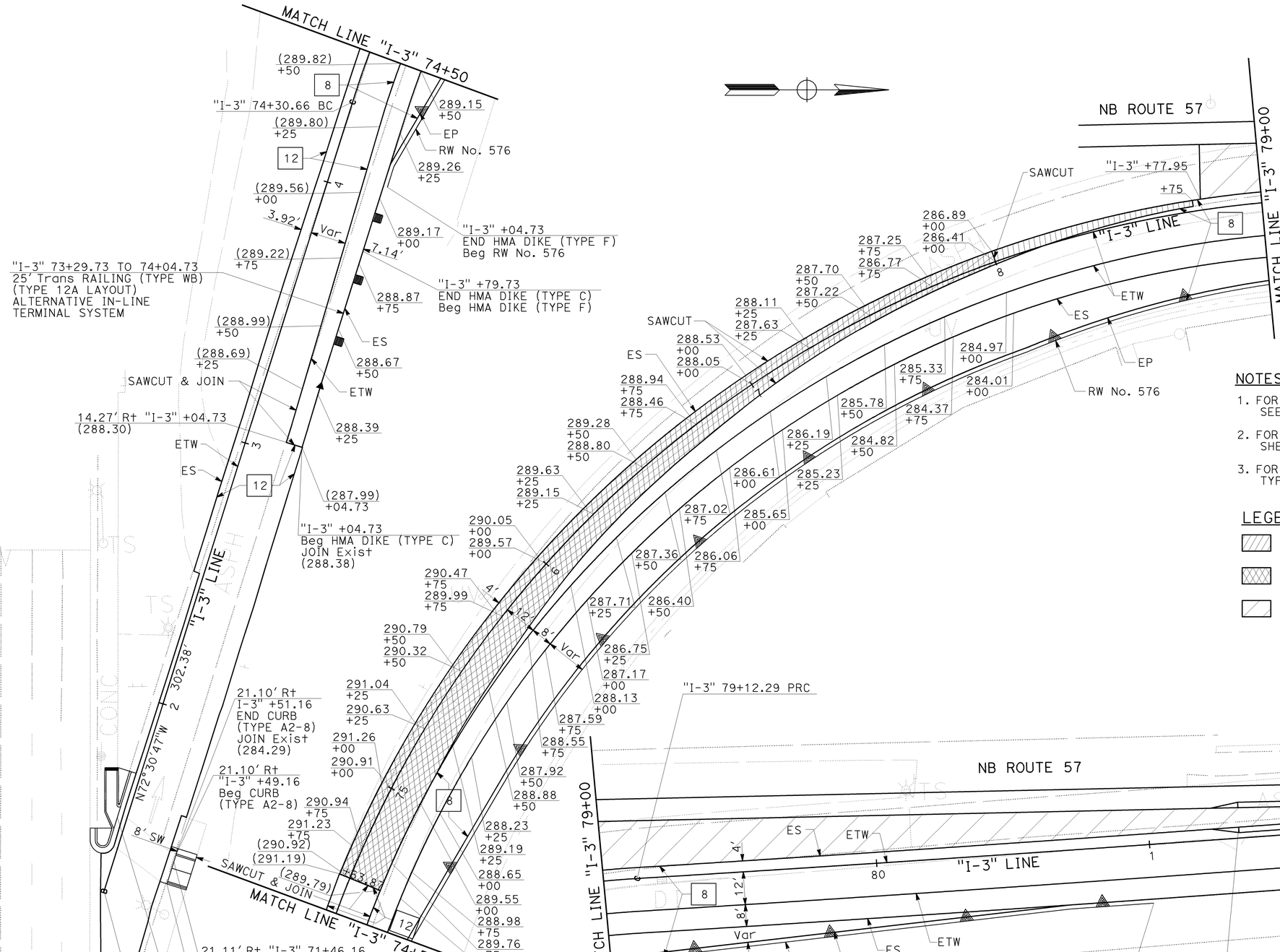

NOTES:

1. FOR CURB AND DIKE TRANSITIONS AND DETAILS, SEE CONSTRUCTION DETAILS SHEET C-47.
2. FOR CURB RAMP DETAILS, SEE CONSTRUCTION DETAILS SHEET C-49.
3. FOR STRUCTURAL PAVEMENT SECTION TYPES, SEE TYPICAL CROSS SECTIONS SHEET X-1.

LEGEND THIS SHEET

- 10 — 0.20' & Var HMA (TYPE A) OVERLAY
- 11 — 0.20' & Var COLD PLANE AC PAVEMENT; 0.20' & Var HMA (TYPE A) OVERLAY
- MINOR CONCRETE (PATTERNED)

CONSTRUCTION DETAILS
(RAMP "I-3" DETAILS)
SCALE: 1" = 20'

C-45

REVISED BY	DATE REVISED
JJV	12/03/09

CALCULATED-DESIGNED BY: JOHN CURTIS
CHECKED BY: JOSUE VAGLIENTY
CONSULTANT FUNCTIONAL SUPERVISOR: GONZALO PEÑA
STATE OF CALIFORNIA - DEPARTMENT OF TRANSPORTATION

J:\d0F031\mainline\4_RBF revision1\c0F031ga045.dgn
16-DEC-2009 14:31
trlenard

LAST REVISION DATE PLOTTED => 16-DEC-2009
TIME PLOTTED => 14:31

Dist	COUNTY	ROUTE	POST MILES TOTAL PROJECT	SHEET No.	TOTAL SHEETS
12	Ora	57	16.2/18.6	87	960

REGISTERED CIVIL ENGINEER — DATE 7/15/09

12-14-09
PLANS APPROVAL DATE

JOSUE J. VAGLIENTY No. 70783 Exp. 6-30-11 CIVIL — REGISTERED PROFESSIONAL ENGINEER — STATE OF CALIFORNIA

THE STATE OF CALIFORNIA OR ITS OFFICERS OR AGENTS SHALL NOT BE RESPONSIBLE FOR THE ACCURACY OR COMPLETENESS OF SCANNED COPIES OF THIS PLAN SHEET.

RBF CONSULTING
14275 ALTON PKWY
IRVINE, CA 92618

OCTA
550 S. MAIN STREET
ORANGE, CA 92863

NOTE:

FOR STRUCTURAL PAVEMENT SECTION TYPES,
SEE TYPICAL CROSS SECTIONS SHEET X-1.

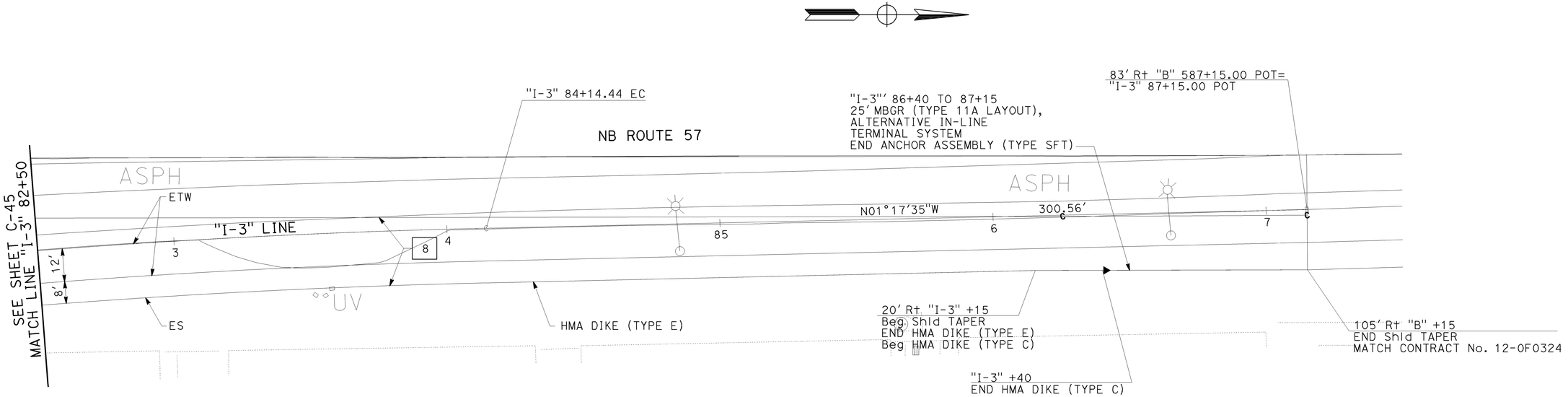

CONSTRUCTION DETAILS
(RAMP "I-3" DETAILS)

SCALE: 1" = 20'

C-46

H:\pdata\10105878\CADD\TransPW\Div\Detail\c0F031ga046.dgn

STATE OF CALIFORNIA - DEPARTMENT OF TRANSPORTATION

CONSULTANT FUNCTIONAL SUPERVISOR: GONZALO PEÑA

CALCULATED-DESIGNED BY: JOHN CURTIS

CHECKED BY: JOSUE VAGLIENTY

REVISED BY

DATE REVISED

trstrk 13-APR-2010 15:58

LAST REVISION DATE PLOTTED => 13-APR-2010
TIME PLOTTED => 15:58
08-01-08

BORDER LAST REVISED 4/11/2008

RELATIVE BORDER SCALE IS IN INCHES 0 1 2 3

USERNAME => trstrk
DGN FILE => c0F031ga046.dgn

CU 12220

EA 0F0311

Dist	COUNTY	ROUTE	POST MILES TOTAL PROJECT	SHEET No.	TOTAL SHEETS
12	Ora	57	16.2/18.6	88	960

REGISTERED CIVIL ENGINEER — DATE 7/15/09

12-14-09
PLANS APPROVAL DATE

REGISTERED PROFESSIONAL ENGINEER — JOSUE J. VAGLIENTY — No. 70783 — Exp. 6-30-11 — CIVIL — STATE OF CALIFORNIA

THE STATE OF CALIFORNIA OR ITS OFFICERS OR AGENTS SHALL NOT BE RESPONSIBLE FOR THE ACCURACY OR COMPLETENESS OF SCANNED COPIES OF THIS PLAN SHEET.

RBF CONSULTING
14275 ALTON PKWY
IRVINE, CA 92618

OCTA
550 S. MAIN STREET
ORANGE, CA 92863

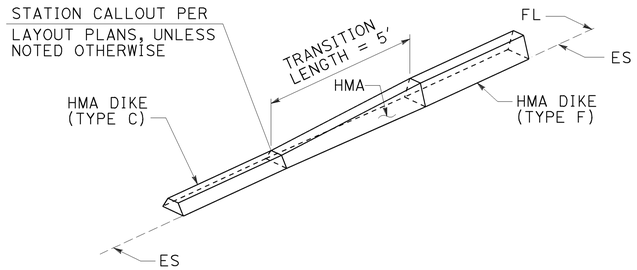

HMA DIKE (TYPE C) TO HMA DIKE (TYPE F)

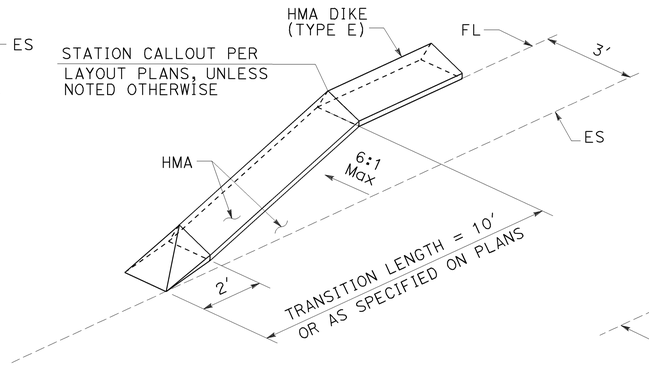

END DETAIL OF HMA DIKE (TYPE E) WITH SIDE GUTTER

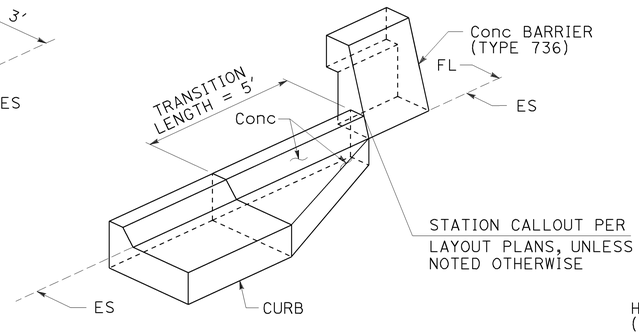

CURB TO CONCRETE BARRIER (TYPE 736)

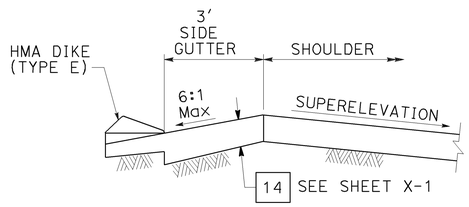

HMA DIKE (TYPE E) WITH SIDE GUTTER DETAIL

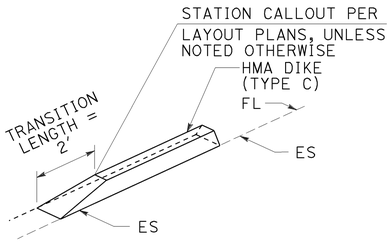

END DETAIL OF HMA DIKE (TYPE C)

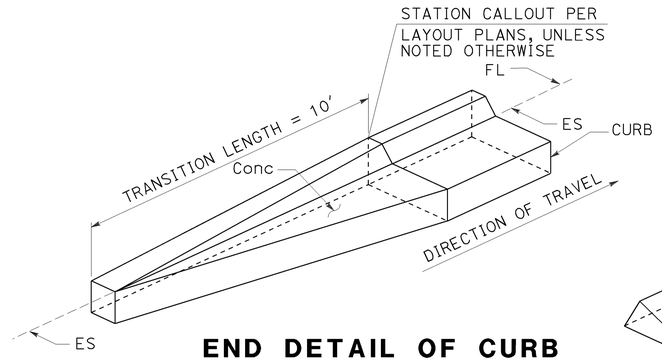

END DETAIL OF CURB

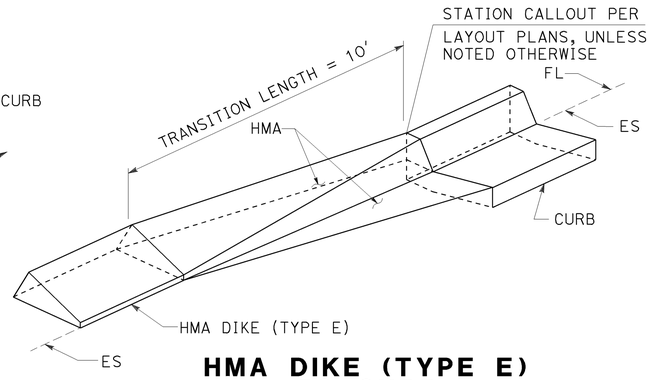

HMA DIKE (TYPE E) TO CURB

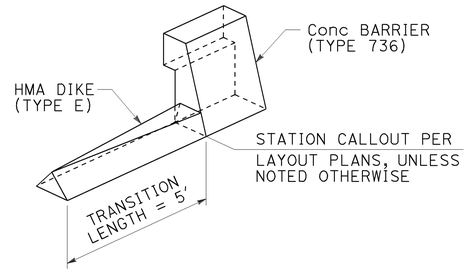

HMA DIKE (TYPE E) TO CONCRETE BARRIER (TYPE 736)

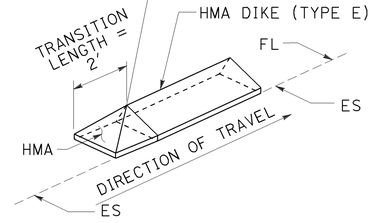

END DETAIL OF HMA DIKE (TYPE E)

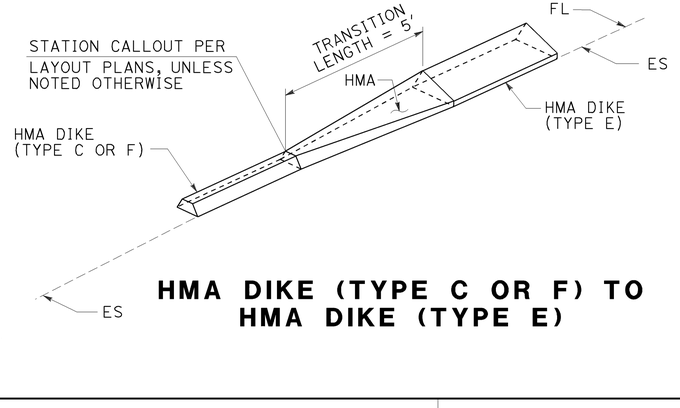

HMA DIKE (TYPE C OR F) TO HMA DIKE (TYPE E)

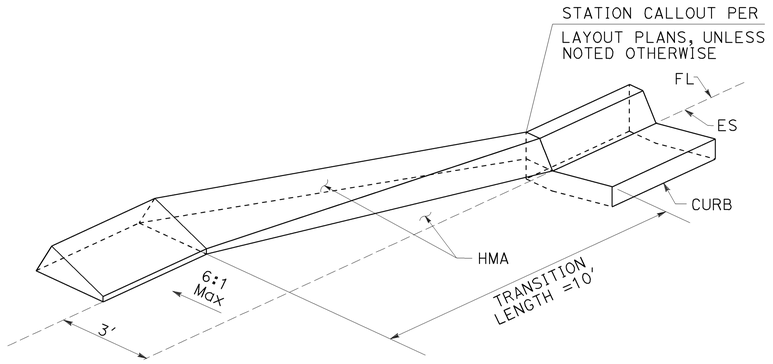

HMA DIKE (TYPE E) WITH SIDE GUTTER TO CURB

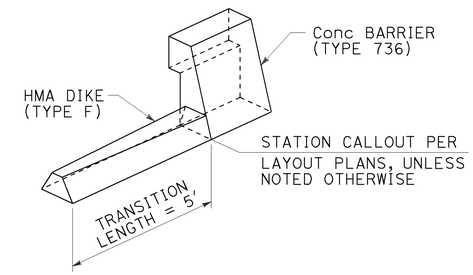

HMA DIKE (TYPE F) TO CONCRETE BARRIER (TYPE 736)

CONSTRUCTION DETAILS
(CURB AND HMA DIKE TRANSITIONS)

NO SCALE

C-47

LAST REVISION DATE PLOTTED => 16-DEC-2009
08-01-08 TIME PLOTTED => 14:31

trlenard 16-DEC-2009 14:31
H:\pdata\10105878\CADD\TransPW\Div\Detail\c0F031ga047.dgn

STATE OF CALIFORNIA - DEPARTMENT OF TRANSPORTATION
Caltrans

REVISED BY	DATE REVISED

CALCULATED-DESIGNED BY: JOHN CURTIS
CHECKED BY: JOSUE VAGLIENTY
CONSULTANT FUNCTIONAL SUPERVISOR: GONZALO PEÑA

BORDER LAST REVISED 4/11/2008

RELATIVE BORDER SCALE IS IN INCHES 0 1 2 3

USERNAME => trlenard
DGN FILE => c0F031ga047.dgn

CU 12220

EA 0F0311

Dist	COUNTY	ROUTE	POST MILES TOTAL PROJECT	SHEET No.	TOTAL SHEETS
12	Ora	57	16.2/18.6	89	960

REGISTERED CIVIL ENGINEER — DATE 7/15/09

JOSUE J. VAGLIENTY No. 70783 Exp. 6-30-11 CIVIL — REGISTERED PROFESSIONAL ENGINEER — STATE OF CALIFORNIA

12-14-09
PLANS APPROVAL DATE

THE STATE OF CALIFORNIA OR ITS OFFICERS OR AGENTS SHALL NOT BE RESPONSIBLE FOR THE ACCURACY OR COMPLETENESS OF SCANNED COPIES OF THIS PLAN SHEET.

RBF CONSULTING
14275 ALTON PKWY
IRVINE, CA 92618

OCTA
550 S. MAIN STREET
ORANGE, CA 92863

NOTE:

FOR STRUCTURAL PAVEMENT SECTION TYPES, SEE TYPICAL CROSS SECTIONS SHEET X-1.

MVP LOCATION TABLE

LINE	STATION, OFFSET	HMA DIKE TYPE	L1	L2	W	STRUCTURAL SECTION
"T"	69+95, 36′ Rt	NONE	40′	15′	9′	14
"G-3"	17+25, 51′ Rt	HMA DIKE (TYPE E)	40′	20′	12′	14
"I-5"	60+42.50, 32′ Rt	NONE	45′	20′	12′	15
"B"	565+97.50, 110′ Rt	NONE	55′	20′	17′	15
"B"	568+66, 107′ Rt	NONE	55′	20′	14′	15
"I-4"	68+72.50, 36′ Rt	NONE	45′	20′	12′	15
"I-4"	75+82.50, 34′ Rt	NONE	45′	20′	12′	15

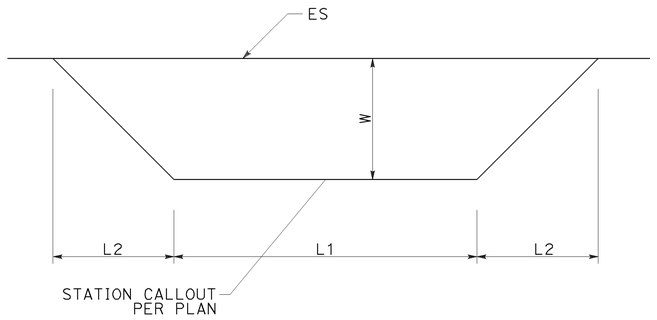

MAINTENANCE VEHICLE PULLOUT (MVP) PLAN

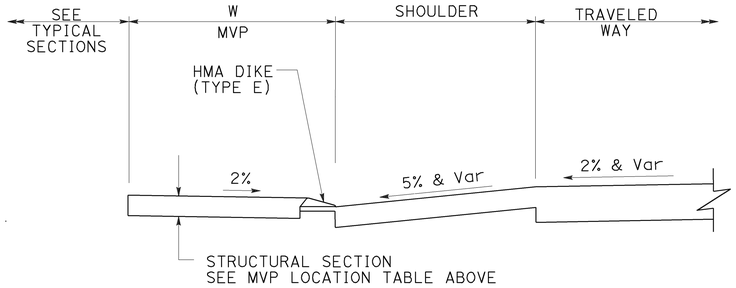

WITH HMA DIKE (TYPE E)

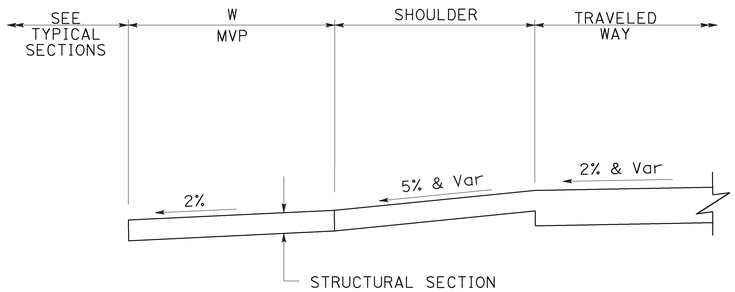

MAINTENANCE VEHICLE PULLOUT (MVP) WITHOUT HMA DIKE

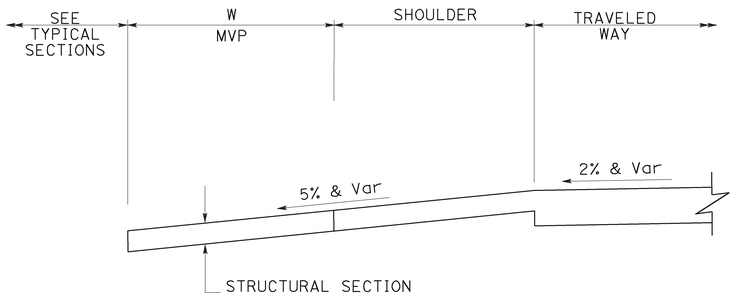

MVP ON RAMP "T"

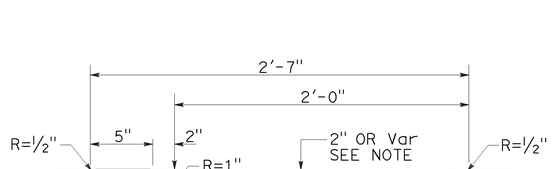

CURB (TYPE B2-2 MOD)

MODIFIED CURBS

NOTE: MATCH PAVEMENT CROSS SLOPE WHEN PLACED ON HIGH SIDE OF SUPERELEVATION OR TANGENT

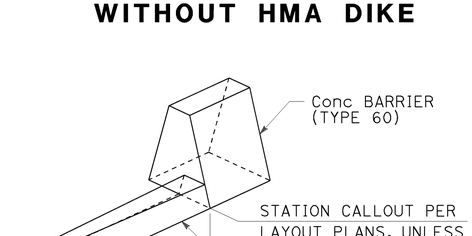

HMA DIKE (TYPE F) TO CONCRETE BARRIER (TYPE 60)

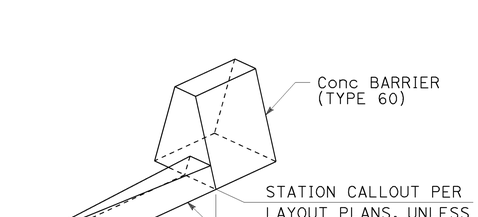

HMA DIKE (TYPE E) TO CONCRETE BARRIER (TYPE 60)

CONSTRUCTION DETAILS

(MVP, CURB AND HMA DIKE TRANSITIONS)

NO SCALE

C-48

REVISED BY | DATE REVISED
JOHN CURTIS | JOSUE VAGLIENTY
CALCULATED-DESIGNED BY | CHECKED BY
GONZALO PEÑA
CONSULTANT FUNCTIONAL SUPERVISOR
STATE OF CALIFORNIA - DEPARTMENT OF TRANSPORTATION
Caltrans
trlenard 16-DEC-2009 14:31
H:\pdata\10105878\CADD\TransPW\Div\Detail\c0F031ga048.dgn
LAST REVISION | DATE PLOTTED => 16-DEC-2009
08-01-08 | TIME PLOTTED => 14:31
BORDER LAST REVISED 4/11/2008
RELATIVE BORDER SCALE IS IN INCHES 0 1 2 3
USERNAME => trlenard
DGN FILE => c0F031ga048.dgn
CU 12220
EA 0F0311

Dist	COUNTY	ROUTE	POST MILES TOTAL PROJECT	SHEET No.	TOTAL SHEETS
12	Ora	57	16.2/18.6	90	960

REGISTERED CIVIL ENGINEER — 12-08-09 DATE

JOSUE J. VAGLIENTY No. 70783 Exp. 6-30-11 CIVIL — REGISTERED PROFESSIONAL ENGINEER — STATE OF CALIFORNIA

12-14-09
PLANS APPROVAL DATE

THE STATE OF CALIFORNIA OR ITS OFFICERS OR AGENTS SHALL NOT BE RESPONSIBLE FOR THE ACCURACY OR COMPLETENESS OF SCANNED COPIES OF THIS PLAN SHEET.

RBF CONSULTING
14275 ALTON PKWY
IRVINE, CA 92618

OCTA
550 S. MAIN STREET
ORANGE, CA 92863

NOTES:

1. SEE Std PLAN A88A AND A88B FOR ALL CURB RAMP DETAILS NOT SHOWN.
2. FOR CROSS GUTTER CONTACT JOINTS, DOWELS SHALL BE #4 BARS 18" LONG.

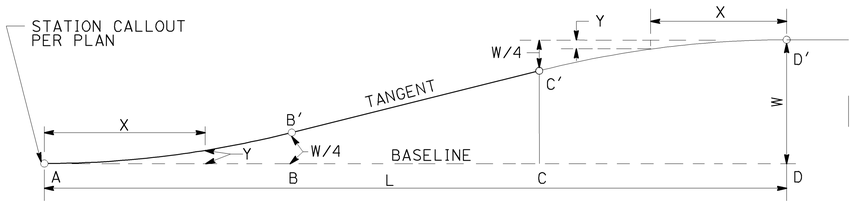

W = WIDTH OF LANE
L = LENGTH OF TAPER
X = DISTANCE FROM POINT "A" ALONG BASE LINE
Y = OFFSET FROM BASE LINE
AB = BC = CD = L/3
AB' AND C'D' ARE PARABOLIC CURVES

L=120' W=12'

L	0'	10'	20'	30'	40'	60'	80'	90'	100'	110'	120'
W	0'	0.19'	0.75'	1.69'	3.00'	6.00'	9.00'	10.31'	11.25'	11.81'	12.00'

BAY TAPER

RAMP "T" Sta 67+00
RAMP "G-3" Sta 13+08.13
RAMP "H-1" Sta 26+70.63

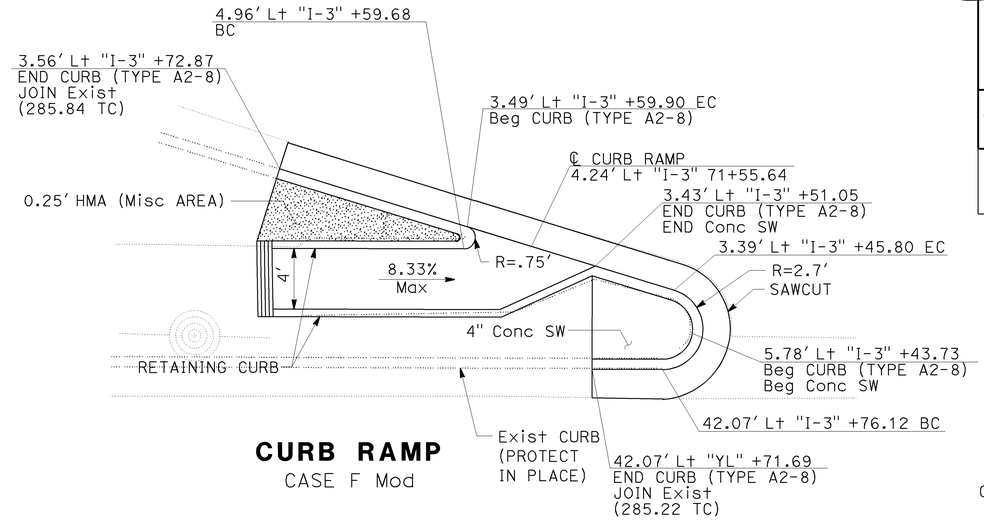

CURB RAMP

CASE F Mod

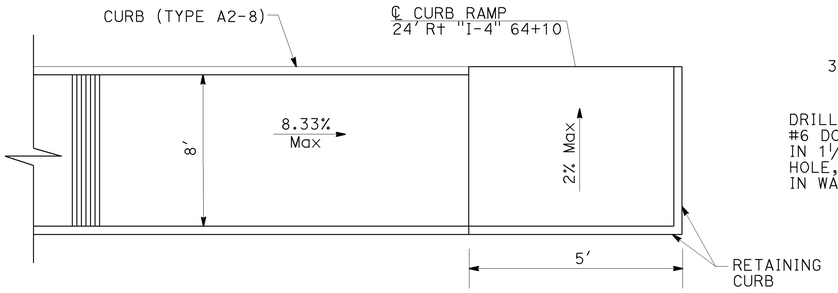

CURB RAMP

CASE C Mod

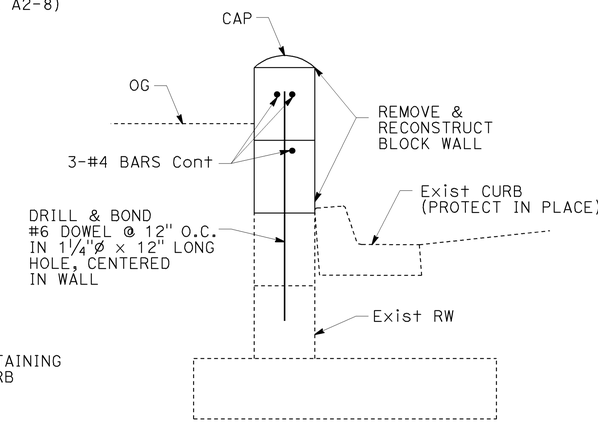

PRIVATE ALLEY BLOCK WALL

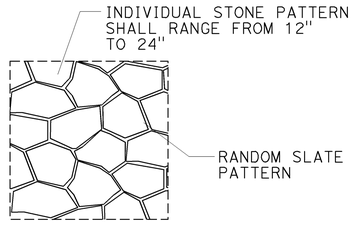

MINOR CONCRETE (PATTERNED)

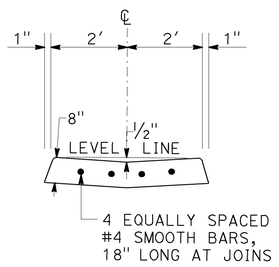

CONCRETE CROSS GUTTER DETAIL

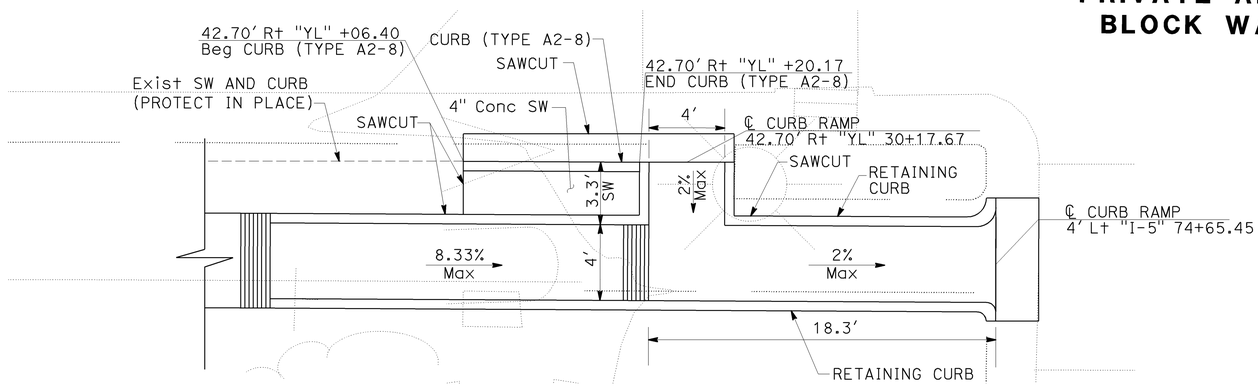

CURB RAMP

CASE CM Mod

CONSTRUCTION DETAILS
(BAY TAPER, CURB RAMP, CROSS GUTTER, AND BLOCK WALL DETAILS)

NO SCALE

C-49

STATE OF CALIFORNIA - DEPARTMENT OF TRANSPORTATION
CONSULTANT FUNCTIONAL SUPERVISOR: GONZALO PEÑA
CALCULATED-DESIGNED BY: SUSAN POMERLEAU
CHECKED BY: JOSUE VAGLIENTY
REVISED BY: JJV
DATE REVISED: 12/03/09

H:\pdata\10105878\Admin\submittals\2009-07-15 FINAL Electronic-Only Submittal\DGN\standard PLOT Files 2009\c0F031ga049.dgn

LAST REVISION DATE PLOTTED => 16-DEC-2009
TIME PLOTTED => 14:31

BORDER LAST REVISED 4/11/2008 | RELATIVE BORDER SCALE IS IN INCHES 0 1 2 3 | USERNAME => trienard | DGN FILE => c0F031ga049.dgn | CU 12220 | EA 0F0311

Dist	COUNTY	ROUTE	POST MILES TOTAL PROJECT	SHEET No.	TOTAL SHEETS
12	Ora	57	16.2/18.6	91	960

REGISTERED CIVIL ENGINEER 7/15/09 DATE

12-14-09
PLANS APPROVAL DATE

REGISTERED PROFESSIONAL ENGINEER JOSUE J. VAGLIENTY No. 70783 Exp. 6-30-11 CIVIL STATE OF CALIFORNIA

THE STATE OF CALIFORNIA OR ITS OFFICERS OR AGENTS SHALL NOT BE RESPONSIBLE FOR THE ACCURACY OR COMPLETENESS OF SCANNED COPIES OF THIS PLAN SHEET.

RBF CONSULTING
14275 ALTON PKWY
IRVINE, CA 92618

OCTA
550 S. MAIN STREET
ORANGE, CA 92863

NOTES:

1. FOR CURB AND DIKE TRANSITIONS AND DETAILS, SEE CONSTRUCTION DETAILS SHEET C-47.
2. FOR STRUCTURAL PAVEMENT SECTION TYPES, SEE TYPICAL CROSS SECTIONS SHEET X-1.

LEGEND THIS SHEET

MINOR CONCRETE

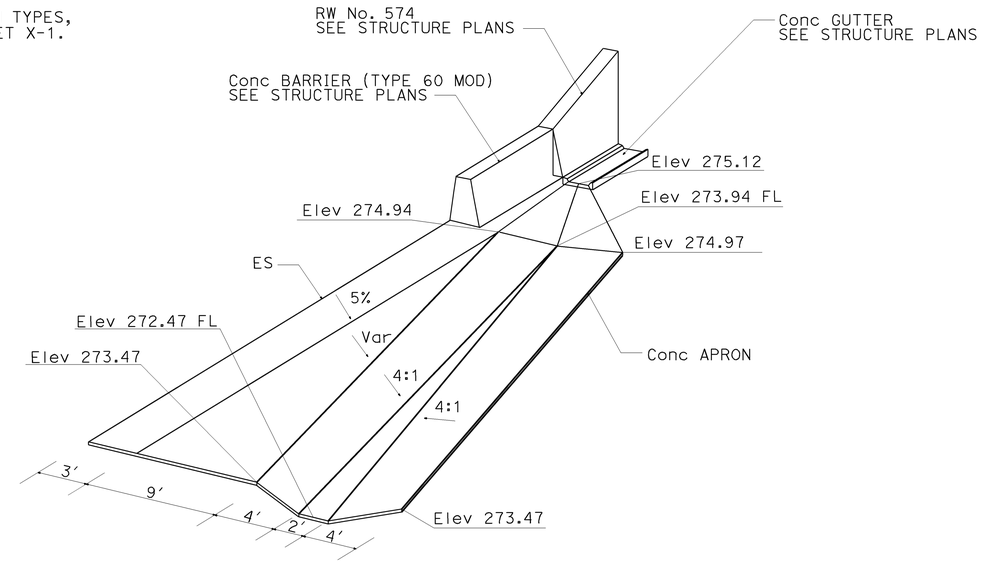

ISOMETRIC VIEW
NO SCALE

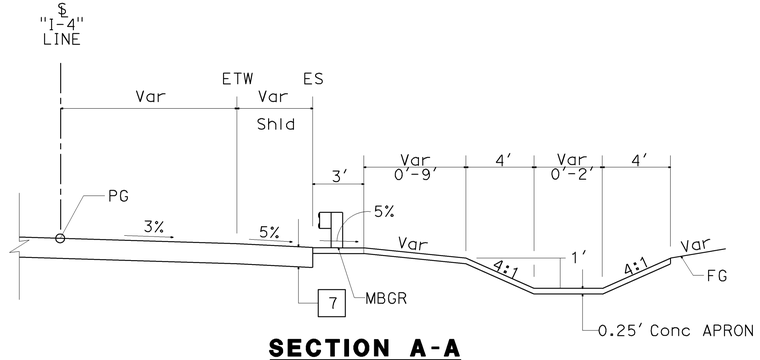

SECTION A-A
NO SCALE

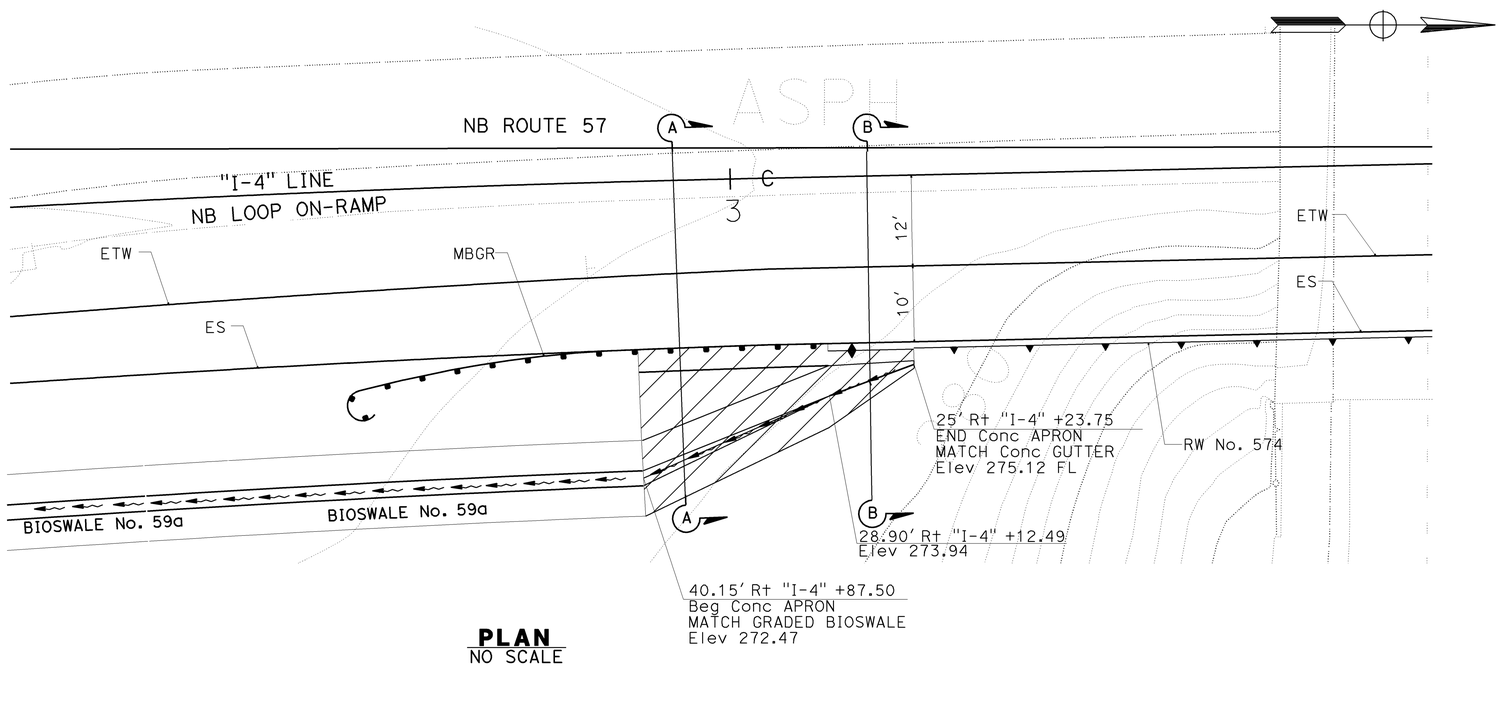

PLAN
NO SCALE

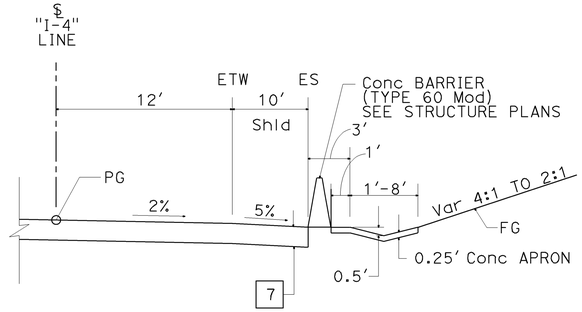

SECTION B-B
NO SCALE

CONSTRUCTION DETAILS
(RAMP "I-4" CONCRETE APRON DETAILS)

NO SCALE

C-50

STATE OF CALIFORNIA - DEPARTMENT OF TRANSPORTATION
Caltrans
CONSULTANT FUNCTIONAL SUPERVISOR: GONZALO PEÑA
CALCULATED-DESIGNED BY: SUSAN POMERLEAU
CHECKED BY: JOSUE VAGLIENTY
REVISED BY
DATE REVISED

H:\pdata\10105878\Admin\submittals\2009-07-15 FINAL Electronic-Only Submittal\DGN-lenard PLOT File: 16-DEC-2009 14:31 FINAL SUBMITTAL\c0F031ga050.dgn

LAST REVISION 08-01-08
DATE PLOTTED => 16-DEC-2009
TIME PLOTTED => 14:31

Dist	COUNTY	ROUTE	POST MILES TOTAL PROJECT	SHEET No.	TOTAL SHEETS
12	Ora	57	16.2/18.6	92	960

REGISTERED CIVIL ENGINEER — DATE 7/15/09

RICHARD LUCERA No. 58089 Exp. 6/30/10 CIVIL — REGISTERED PROFESSIONAL ENGINEER — STATE OF CALIFORNIA

12-14-09
PLANS APPROVAL DATE

THE STATE OF CALIFORNIA OR ITS OFFICERS OR AGENTS SHALL NOT BE RESPONSIBLE FOR THE ACCURACY OR COMPLETENESS OF SCANNED COPIES OF THIS PLAN SHEET.

RBF CONSULTING
14275 ALTON PKWY
IRVINE, CA 92618

OCTA
550 S. MAIN STREET
ORANGE, CA 92863

NOTE:

FOR ACCURATE RIGHT OF WAY AND ACCESS DATA, CONTACT RIGHT OF WAY ENGINEERING AT THE DISTRICT OFFICE.

ABBREVIATION:

TCE - TEMPORARY CONSTRUCTION EASEMENT

LEGEND

TEMPORARY DRAINAGE INLET PROTECTION	
TEMPORARY SILT FENCE	xx——xx——TSF——xx
TEMPORARY FIBER ROLL	TFR
TEMPORARY GRAVEL BAG BERM	TGBB
TEMPORARY CHECK DAM	
TEMPORARY CONSTRUCTION ENTRANCE	
TEMPORARY HYDRAULIC MULCH (BONDED FIBER MATRIX)	
CONCRETE WASTE MANAGEMENT	CWM
VEHICLE AND EQUIPMENT CLEANING	VEC
VEHICLE AND EQUIPMENT MAINTENANCE	VEM
STOCKPILE MANAGEMENT	CS

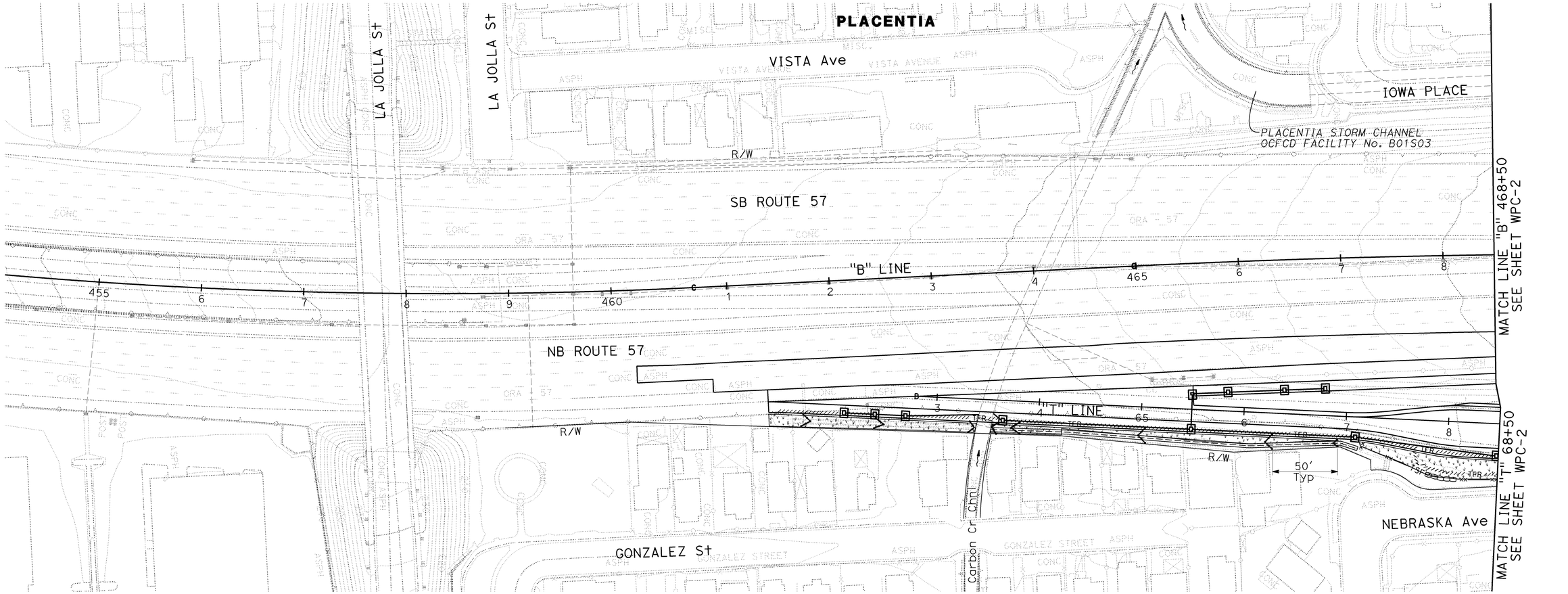

TEMPORARY WATER POLLUTION CONTROL PLAN

SCALE: 1" = 50'

WPC-1

THIS PLAN ACCURATE FOR TEMPORARY WATER POLLUTION CONTROL WORK ONLY.

LAST REVISION — DATE PLOTTED => 16-DEC-2009 — TIME PLOTTED => 08:19
08-01-08

STATE OF CALIFORNIA - DEPARTMENT OF TRANSPORTATION
CONSULTANT FUNCTIONAL SUPERVISOR: RICHARD LUCERA
CALCULATED-DESIGNED BY: SCOTT CARTWRIGHT
CHECKED BY: RICHARD LUCERA
REVISED BY
DATE REVISED

H:\PDATA\10105878\CADD\Strmwater\Div\Merged CADD Files\c0F031gb001.dgn trstrk
16-DEC-2009 08:19

BORDER LAST REVISED 4/11/2008

RELATIVE BORDER SCALE IS IN INCHES 0 1 2 3

USERNAME => trstrk
DGN FILE => c0F031gb001.dgn

CU 12220

EA 0F0311

NOTE:

FOR ACCURATE RIGHT OF WAY AND ACCESS DATA,
CONTACT RIGHT OF WAY ENGINEERING AT THE DISTRICT OFFICE.

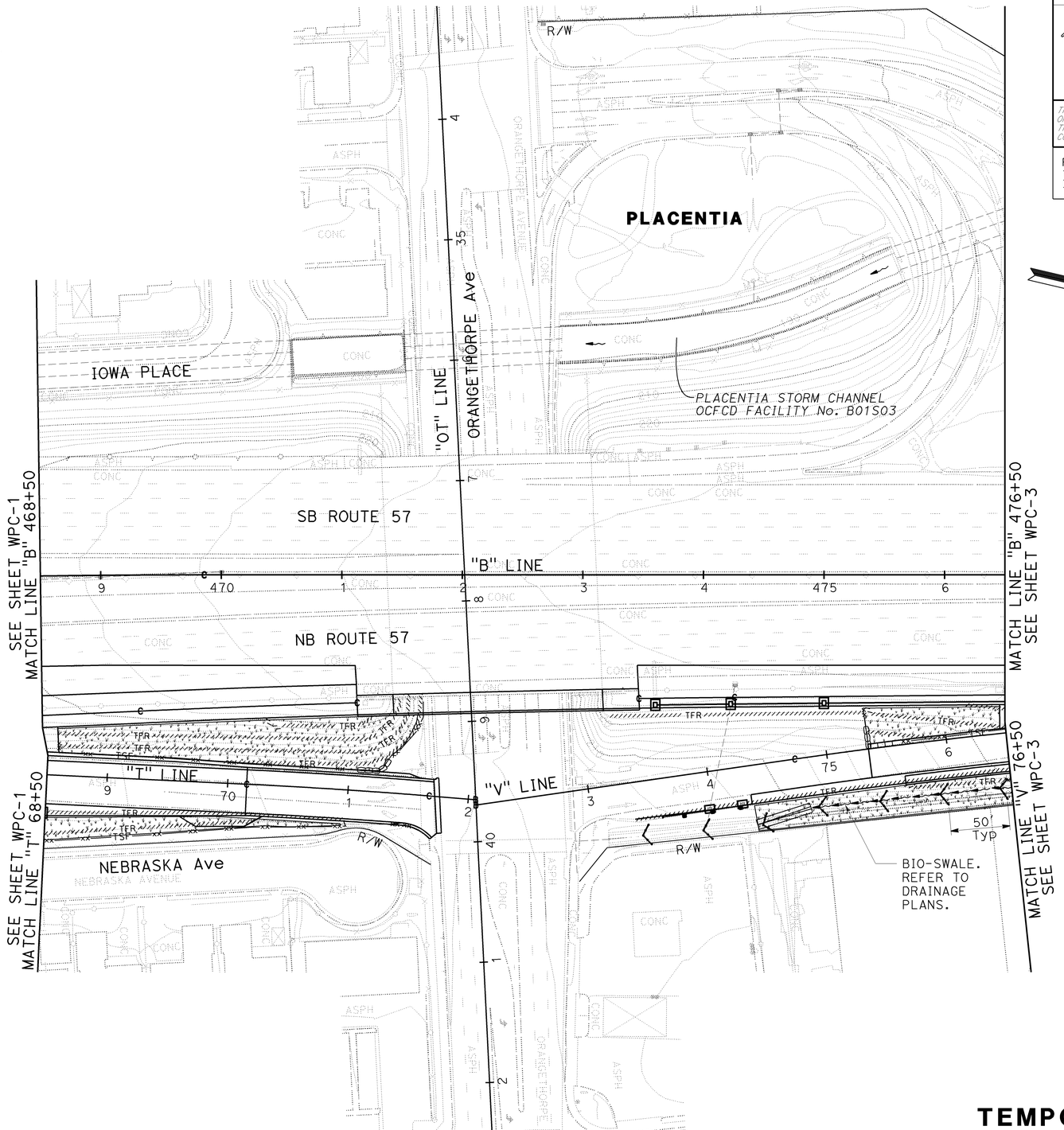

Dist	COUNTY	ROUTE	POST MILES TOTAL PROJECT	SHEET No.	TOTAL SHEETS
12	Ora	57	16.2/18.6	93	960

Richard Lucera 7/15/09
REGISTERED CIVIL ENGINEER DATE

RICHARD LUCERA No. 58089 Exp. 6/30/10 CIVIL
REGISTERED PROFESSIONAL ENGINEER * STATE OF CALIFORNIA *

12-14-09
PLANS APPROVAL DATE

THE STATE OF CALIFORNIA OR ITS OFFICERS OR AGENTS SHALL NOT BE RESPONSIBLE FOR THE ACCURACY OR COMPLETENESS OF SCANNED COPIES OF THIS PLAN SHEET.

RBF CONSULTING
14275 ALTON PKWY
IRVINE, CA 92618

OCTA
550 S. MAIN STREET
ORANGE, CA 92863

TEMPORARY WATER POLLUTION CONTROL PLAN

SCALE: 1" = 50'

WPC-2

THIS PLAN ACCURATE FOR TEMPORARY WATER POLLUTION CONTROL WORK ONLY.

REVISED BY	DATE REVISED

CALCULATED-DESIGNED BY
CHECKED BY
CONSULTANT FUNCTIONAL SUPERVISOR
STATE OF CALIFORNIA - DEPARTMENT OF TRANSPORTATION

SCOTT CARTWRIGHT
RICHARD LUCERA
RICHARD LUCERA

Caltrans

H:\PDATA\10105878\CADD\Strmwater\Div\Merged CADD Files\c0F031gb002.dgn trstrk 16-DEC-2009 08:19

LAST REVISION 08-01-08
DATE PLOTTED => 16-DEC-2009
TIME PLOTTED => 08:19

BORDER LAST REVISED 4/11/2008

RELATIVE BORDER SCALE IS IN INCHES 0 1 2 3

USERNAME => trstrk
DGN FILE => c0F031gb002.dgn

CU 12220

EA 0F0311

Dist	COUNTY	ROUTE	POST MILES TOTAL PROJECT	SHEET No.	TOTAL SHEETS
12	Ora	57	16.2/18.6	94	960

Richard Lucera 12/3/09
REGISTERED CIVIL ENGINEER DATE

12-14-09
PLANS APPROVAL DATE

RICHARD LUCERA No. 58089 Exp. 6/30/10 CIVIL — REGISTERED PROFESSIONAL ENGINEER — STATE OF CALIFORNIA

THE STATE OF CALIFORNIA OR ITS OFFICERS OR AGENTS SHALL NOT BE RESPONSIBLE FOR THE ACCURACY OR COMPLETENESS OF SCANNED COPIES OF THIS PLAN SHEET.

RBF CONSULTING
14275 ALTON PKWY
IRVINE, CA 92618

OCTA
550 S. MAIN STREET
ORANGE, CA 92863

NOTE:
FOR ACCURATE RIGHT OF WAY AND ACCESS DATA,
CONTACT RIGHT OF WAY ENGINEERING AT THE DISTRICT OFFICE.

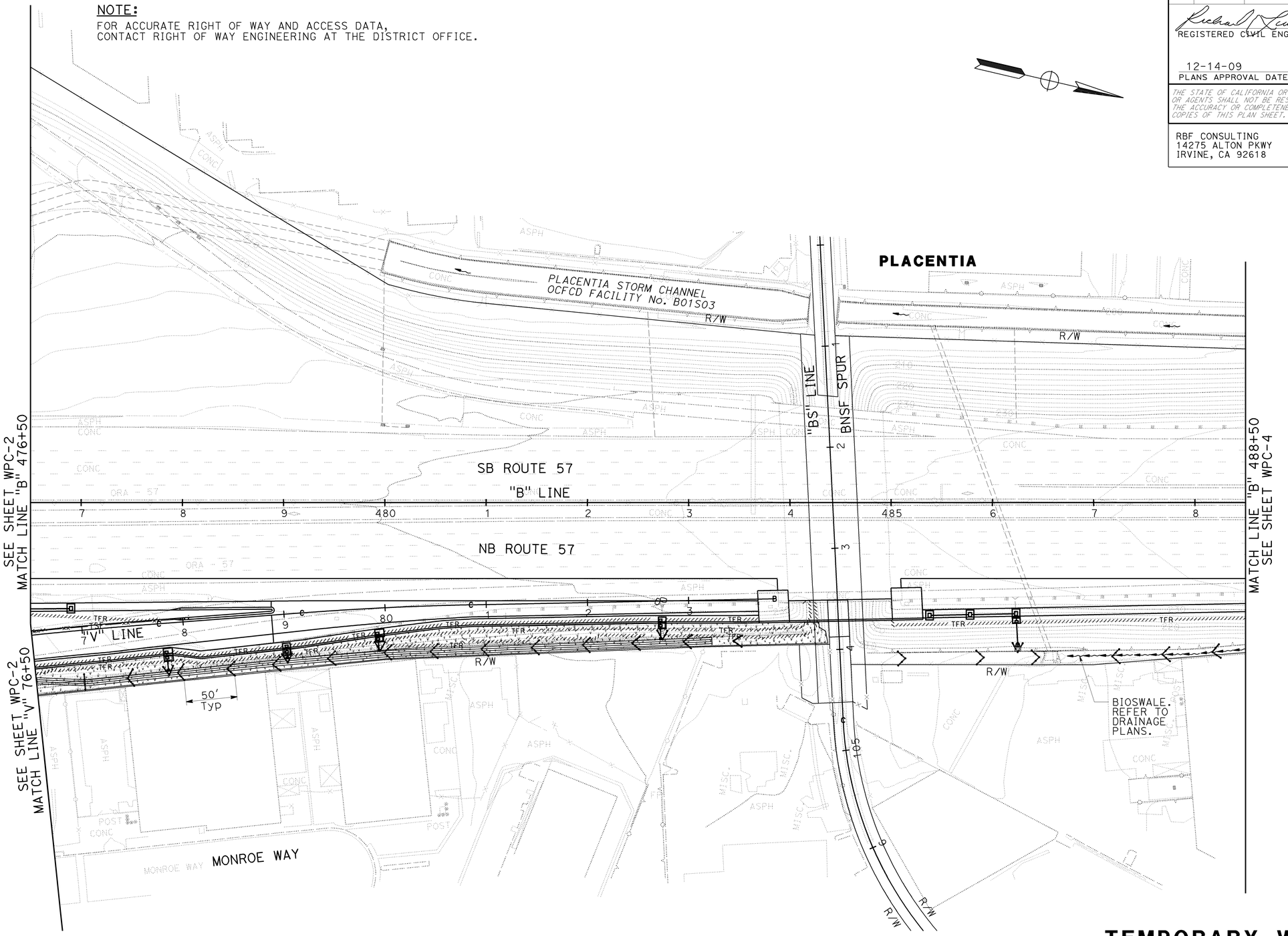

TEMPORARY WATER POLLUTION CONTROL PLAN

SCALE: 1" = 50'

WPC-3

THIS PLAN ACCURATE FOR TEMPORARY WATER POLLUTION CONTROL WORK ONLY.

LAST REVISION | DATE PLOTTED => 16-DEC-2009
08-01-08 | TIME PLOTTED => 08:52

	REVISED BY	DATE REVISED
	JJV	12/3/09

CALCULATED-DESIGNED BY: SCOTT CARTWRIGHT
CHECKED BY: RICHARD LUCERA
CONSULTANT FUNCTIONAL SUPERVISOR: RICHARD LUCERA
STATE OF CALIFORNIA - DEPARTMENT OF TRANSPORTATION
Caltrans

H:\PDATA\10105878\CADD\Strmwater\Dlv\Merged CADD Files\c0F031gb003.dgn 16-DEC-2009 08:52 trstrk

BORDER LAST REVISED 4/11/2008 | RELATIVE BORDER SCALE IS IN INCHES 0 1 2 3 | USERNAME => trstrk | DGN FILE => c0F031gb003.dgn | CU 12220 | EA 0F0311

NOTE:
FOR ACCURATE RIGHT OF WAY AND ACCESS DATA,
CONTACT RIGHT OF WAY ENGINEERING AT THE DISTRICT OFFICE.

Dist	COUNTY	ROUTE	POST MILES TOTAL PROJECT	SHEET No.	TOTAL SHEETS
12	Ora	57	16.2/18.6	95	960

REGISTERED CIVIL ENGINEER — DATE 12/3/09

RICHARD LUCERA No. 58089 Exp. 6/30/10 CIVIL — REGISTERED PROFESSIONAL ENGINEER — STATE OF CALIFORNIA

12-14-09
PLANS APPROVAL DATE

THE STATE OF CALIFORNIA OR ITS OFFICERS OR AGENTS SHALL NOT BE RESPONSIBLE FOR THE ACCURACY OR COMPLETENESS OF SCANNED COPIES OF THIS PLAN SHEET.

RBF CONSULTING
14275 ALTON PKWY
IRVINE, CA 92618

OCTA
550 S. MAIN STREET
ORANGE, CA 92863

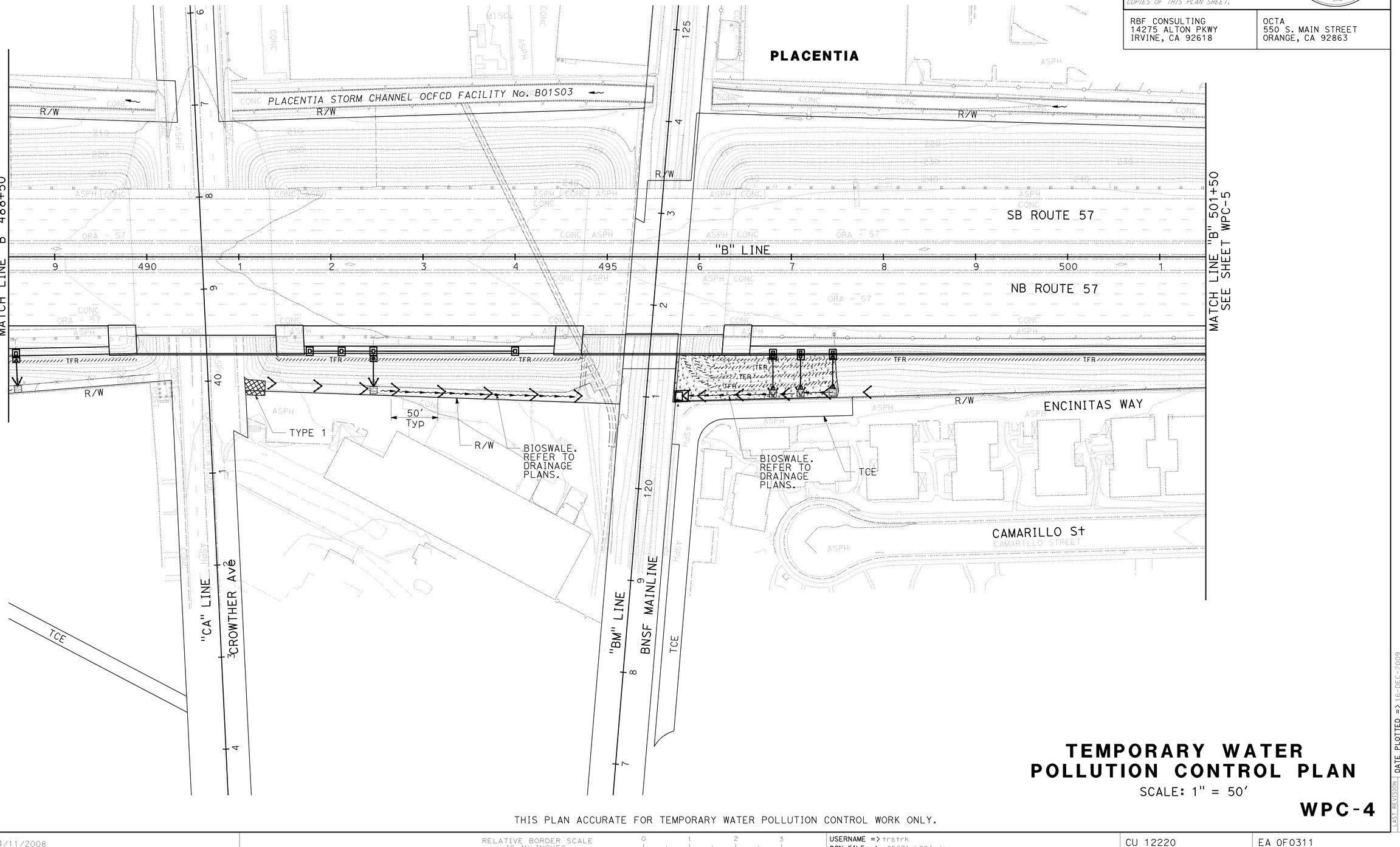

TEMPORARY WATER POLLUTION CONTROL PLAN

SCALE: 1" = 50'

WPC-4

THIS PLAN ACCURATE FOR TEMPORARY WATER POLLUTION CONTROL WORK ONLY.

H:\PDATA\10105878\CADD\Strmwater\Div\Merged CADD Files\c0F031gb004.dgn trstrk 16-DEC-2009 08:52

REVISED BY	DATE REVISED
JJV	12/3/09

CALCULATED-DESIGNED BY
CHECKED BY
CONSULTANT FUNCTIONAL SUPERVISOR
SCOTT CARTWRIGHT
RICHARD LUCERA
RICHARD LUCERA

STATE OF CALIFORNIA - DEPARTMENT OF TRANSPORTATION
Caltrans

BORDER LAST REVISED 4/11/2008

RELATIVE BORDER SCALE IS IN INCHES 0 1 2 3

USERNAME => trstrk
DGN FILE => c0F031gb004.dgn

CU 12220

EA 0F0311

LAST REVISION
DATE PLOTTED => 16-DEC-2009
TIME PLOTTED => 08:52
08-01-08

NOTE:
FOR ACCURATE RIGHT OF WAY AND ACCESS DATA,
CONTACT RIGHT OF WAY ENGINEERING AT THE DISTRICT OFFICE.

Dist	COUNTY	ROUTE	POST MILES TOTAL PROJECT	SHEET No.	TOTAL SHEETS
12	Ora	57	16.2/18.6	96	960

REGISTERED CIVIL ENGINEER — 7/15/09 DATE

RICHARD LUCERA No. 58089 Exp. 6/30/10 CIVIL — REGISTERED PROFESSIONAL ENGINEER — STATE OF CALIFORNIA

12-14-09
PLANS APPROVAL DATE

THE STATE OF CALIFORNIA OR ITS OFFICERS OR AGENTS SHALL NOT BE RESPONSIBLE FOR THE ACCURACY OR COMPLETENESS OF SCANNED COPIES OF THIS PLAN SHEET.

RBF CONSULTING
14275 ALTON PKWY
IRVINE, CA 92618

OCTA
550 S. MAIN STREET
ORANGE, CA 92863

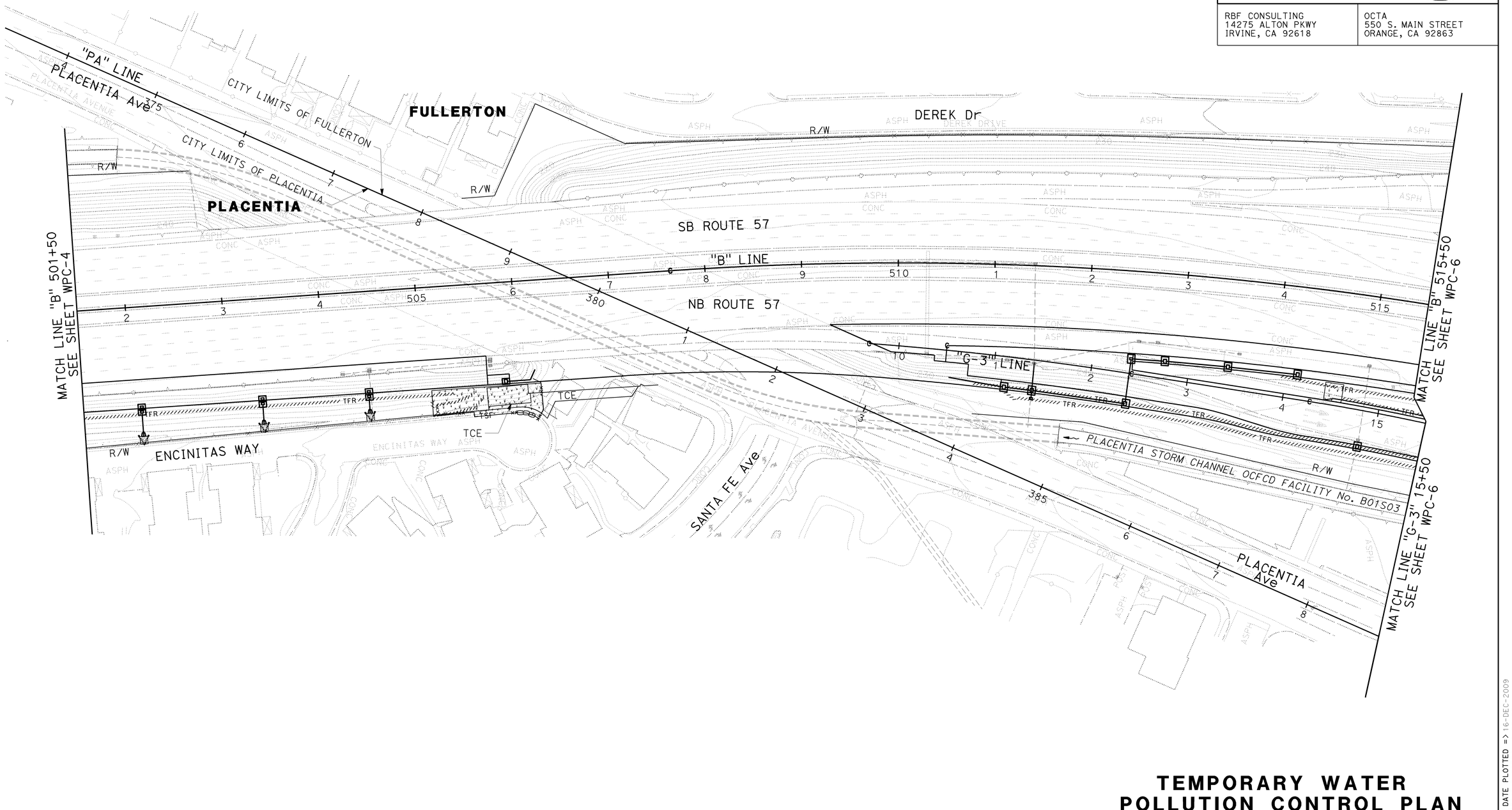

TEMPORARY WATER POLLUTION CONTROL PLAN

SCALE: 1" = 50'

WPC-5

THIS PLAN ACCURATE FOR TEMPORARY WATER POLLUTION CONTROL WORK ONLY.

STATE OF CALIFORNIA - DEPARTMENT OF TRANSPORTATION
CONSULTANT FUNCTIONAL SUPERVISOR: RICHARD LUCERA
CALCULATED-DESIGNED BY: SCOTT CARTWRIGHT
CHECKED BY: RICHARD LUCERA
REVISED BY
DATE REVISED

H:\PDATA\10105878\CADD\Strmwater\Div\Merged CADD Files\c0F031gb005.dgn trstrk 16-DEC-2009 08:20

BORDER LAST REVISED 4/11/2008
RELATIVE BORDER SCALE IS IN INCHES 0 1 2 3
USERNAME => trstrk
DGN FILE => c0F031gb005.dgn
CU 12220
EA 0F0311
LAST REVISION | DATE PLOTTED => 16-DEC-2009
TIME PLOTTED => 08:20
08-01-08

NOTE:
FOR ACCURATE RIGHT OF WAY AND ACCESS DATA,
CONTACT RIGHT OF WAY ENGINEERING AT THE DISTRICT OFFICE.

Dist	COUNTY	ROUTE	POST MILES TOTAL PROJECT	SHEET No.	TOTAL SHEETS
12	Ora	57	16.2/18.6	97	960

REGISTERED CIVIL ENGINEER — DATE 7/15/09

RICHARD LUCERA No. 58089 Exp. 6/30/10 CIVIL — REGISTERED PROFESSIONAL ENGINEER — STATE OF CALIFORNIA

12-14-09
PLANS APPROVAL DATE

THE STATE OF CALIFORNIA OR ITS OFFICERS OR AGENTS SHALL NOT BE RESPONSIBLE FOR THE ACCURACY OR COMPLETENESS OF SCANNED COPIES OF THIS PLAN SHEET.

RBF CONSULTING
14275 ALTON PKWY
IRVINE, CA 92618

OCTA
550 S. MAIN STREET
ORANGE, CA 92863

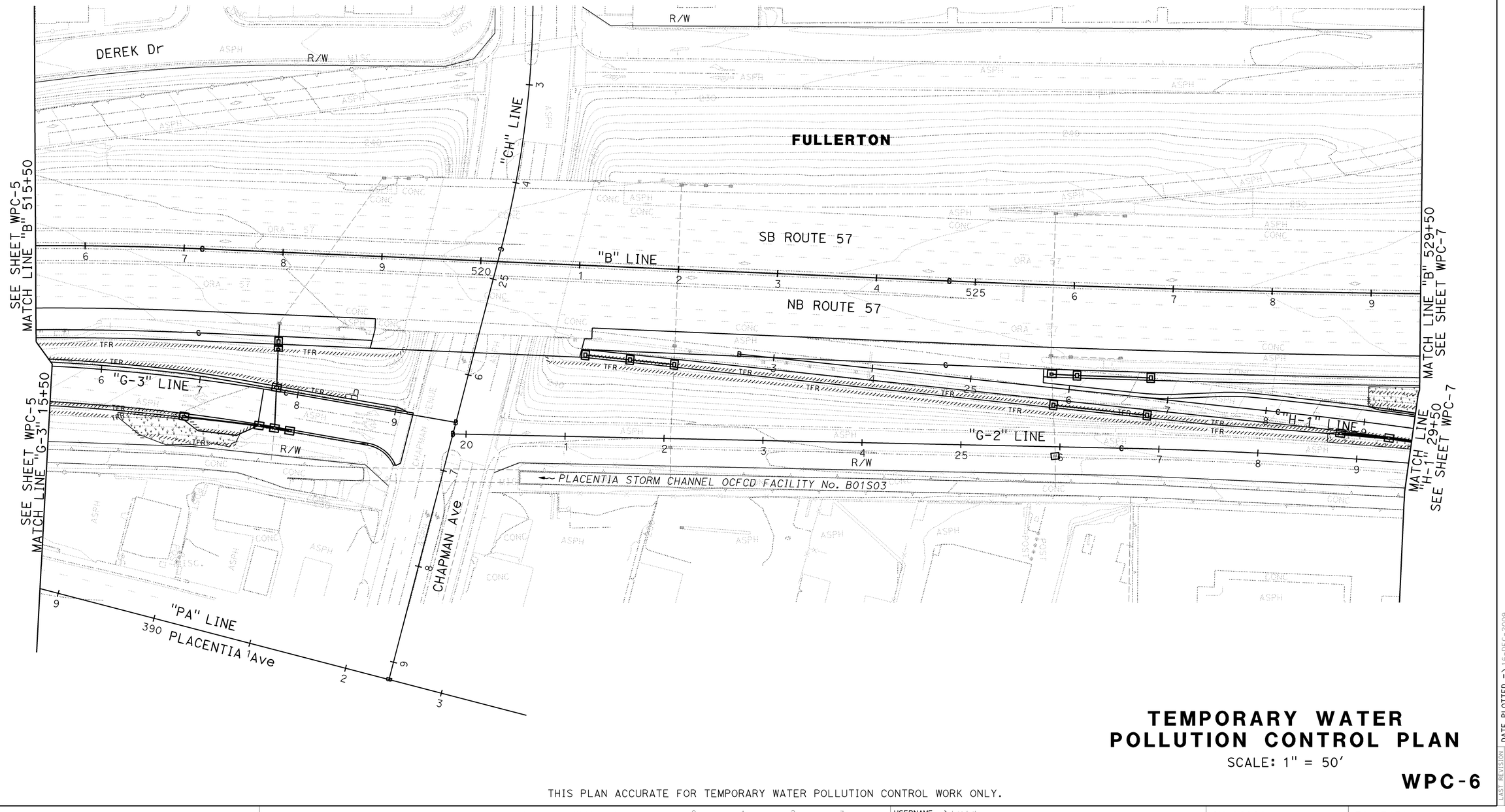

TEMPORARY WATER POLLUTION CONTROL PLAN

SCALE: 1" = 50'

WPC-6

THIS PLAN ACCURATE FOR TEMPORARY WATER POLLUTION CONTROL WORK ONLY.

STATE OF CALIFORNIA - DEPARTMENT OF TRANSPORTATION
Caltrans
CONSULTANT FUNCTIONAL SUPERVISOR: RICHARD LUCERA
CALCULATED-DESIGNED BY: SCOTT CARTWRIGHT
CHECKED BY: RICHARD LUCERA
REVISED BY
DATE REVISED

H:\PDATA\10105878\CADD\Strmwater\Div\Merged CADD Files\c0F031gb006.dgn
16-DEC-2009 08:20
trstrk

LAST REVISION | DATE PLOTTED => 16-DEC-2009
08-01-08 | TIME PLOTTED => 08:20

BORDER LAST REVISED 4/11/2008 | RELATIVE BORDER SCALE IS IN INCHES 0 1 2 3 | USERNAME => trstrk | DGN FILE => c0F031gb006.dgn | CU 12220 | EA 0F0311

NOTE:
FOR ACCURATE RIGHT OF WAY AND ACCESS DATA,
CONTACT RIGHT OF WAY ENGINEERING AT THE DISTRICT OFFICE.

Dist	COUNTY	ROUTE	POST MILES TOTAL PROJECT	SHEET No.	TOTAL SHEETS
12	Ora	57	16.2/18.6	98	960

REGISTERED CIVIL ENGINEER — DATE 7/15/09

RICHARD LUCERA No. 58089 Exp. 6/30/10 CIVIL — REGISTERED PROFESSIONAL ENGINEER — STATE OF CALIFORNIA

12-14-09
PLANS APPROVAL DATE

THE STATE OF CALIFORNIA OR ITS OFFICERS OR AGENTS SHALL NOT BE RESPONSIBLE FOR THE ACCURACY OR COMPLETENESS OF SCANNED COPIES OF THIS PLAN SHEET.

RBF CONSULTING
14275 ALTON PKWY
IRVINE, CA 92618

OCTA
550 S. MAIN STREET
ORANGE, CA 92863

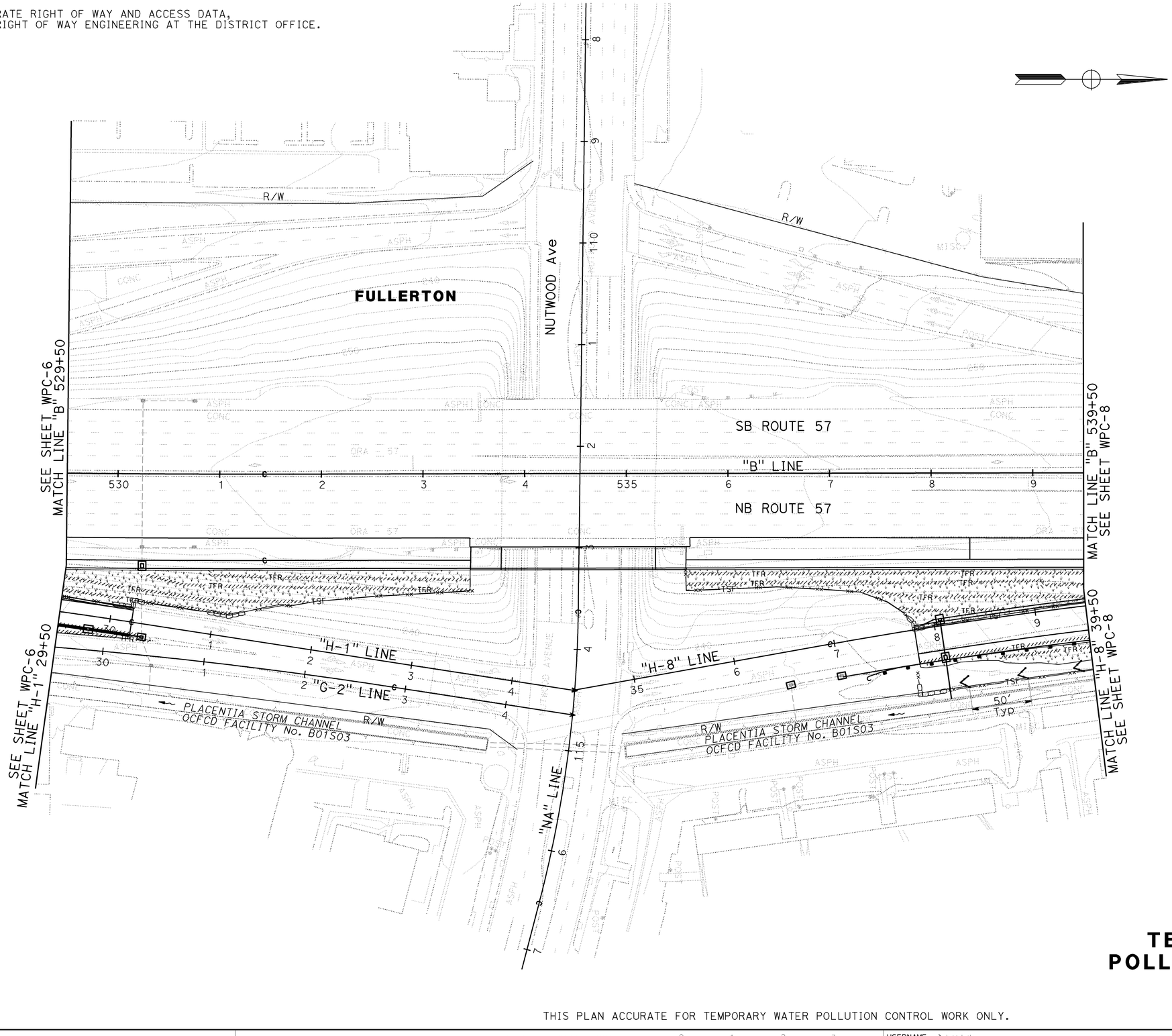

TEMPORARY WATER POLLUTION CONTROL PLAN

SCALE: 1" = 50'

WPC-7

THIS PLAN ACCURATE FOR TEMPORARY WATER POLLUTION CONTROL WORK ONLY.

LAST REVISION DATE PLOTTED => 16-DEC-2009
08-01-08 TIME PLOTTED => 08:20

H:\PDATA\10105878\CADD\Strmwater\Div\Merged CADD Files\c0F031gb007.dgn trstrk 16-DEC-2009 08:20

STATE OF CALIFORNIA - DEPARTMENT OF TRANSPORTATION	CONSULTANT FUNCTIONAL SUPERVISOR	CALCULATED-DESIGNED BY	CHECKED BY	REVISED BY	DATE REVISED
Caltrans	RICHARD LUCERA	SCOTT CARTWRIGHT	RICHARD LUCERA		

BORDER LAST REVISED 4/11/2008

RELATIVE BORDER SCALE IS IN INCHES 0 1 2 3

USERNAME => trstrk
DGN FILE => c0F031gb007.dgn

CU 12220

EA 0F0311

NOTE:
FOR ACCURATE RIGHT OF WAY AND ACCESS DATA,
CONTACT RIGHT OF WAY ENGINEERING AT THE DISTRICT OFFICE.

Dist	COUNTY	ROUTE	POST MILES TOTAL PROJECT	SHEET No.	TOTAL SHEETS
12	Ora	57	16.2/18.6	99	960

REGISTERED CIVIL ENGINEER — DATE 7/15/09

RICHARD LUCERA No. 58089 Exp. 6/30/10 CIVIL — REGISTERED PROFESSIONAL ENGINEER — STATE OF CALIFORNIA

12-14-09
PLANS APPROVAL DATE

THE STATE OF CALIFORNIA OR ITS OFFICERS OR AGENTS SHALL NOT BE RESPONSIBLE FOR THE ACCURACY OR COMPLETENESS OF SCANNED COPIES OF THIS PLAN SHEET.

RBF CONSULTING
14275 ALTON PKWY
IRVINE, CA 92618

OCTA
550 S. MAIN STREET
ORANGE, CA 92863

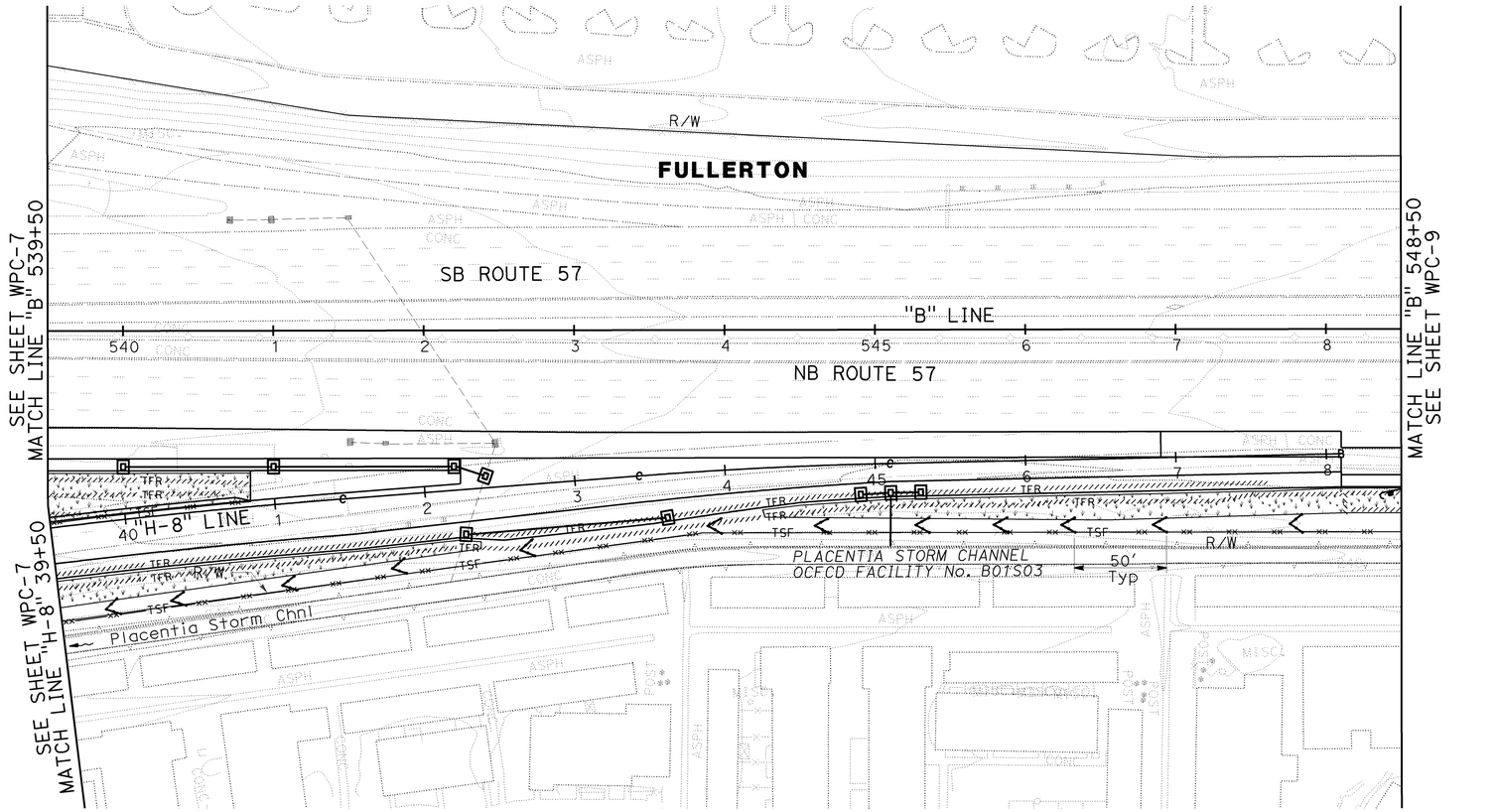

TEMPORARY WATER POLLUTION CONTROL PLAN

SCALE: 1" = 50'

WPC-8

THIS PLAN ACCURATE FOR TEMPORARY WATER POLLUTION CONTROL WORK ONLY.

STATE OF CALIFORNIA - DEPARTMENT OF TRANSPORTATION
CONSULTANT FUNCTIONAL SUPERVISOR: RICHARD LUCERA
CALCULATED-DESIGNED BY: SCOTT CARTWRIGHT
CHECKED BY: RICHARD LUCERA
REVISED BY
DATE REVISED

H:\PDATA\10105878\CADD\Strmwater\Div\Merged CADD Files\c0F031gb008.dgn trstrk
16-DEC-2009 08:20

LAST REVISION DATE PLOTTED => 16-DEC-2009
TIME PLOTTED => 08:20

BORDER LAST REVISED 4/11/2008
RELATIVE BORDER SCALE IS IN INCHES 0 1 2 3
USERNAME => trstrk
DGN FILE => c0F031gb008.dgn
CU 12220
EA 0F0311

NOTE:
FOR ACCURATE RIGHT OF WAY AND ACCESS DATA,
CONTACT RIGHT OF WAY ENGINEERING AT THE DISTRICT OFFICE.

Dist	COUNTY	ROUTE	POST MILES TOTAL PROJECT	SHEET No.	TOTAL SHEETS
12	Ora	57	16.2/18.6	100	960

REGISTERED CIVIL ENGINEER — DATE 7/15/09

RICHARD LUCERA No. 58089 Exp. 6/30/10 CIVIL — REGISTERED PROFESSIONAL ENGINEER — STATE OF CALIFORNIA

12-14-09
PLANS APPROVAL DATE

THE STATE OF CALIFORNIA OR ITS OFFICERS OR AGENTS SHALL NOT BE RESPONSIBLE FOR THE ACCURACY OR COMPLETENESS OF SCANNED COPIES OF THIS PLAN SHEET.

RBF CONSULTING
14275 ALTON PKWY
IRVINE, CA 92618

OCTA
550 S. MAIN STREET
ORANGE, CA 92863

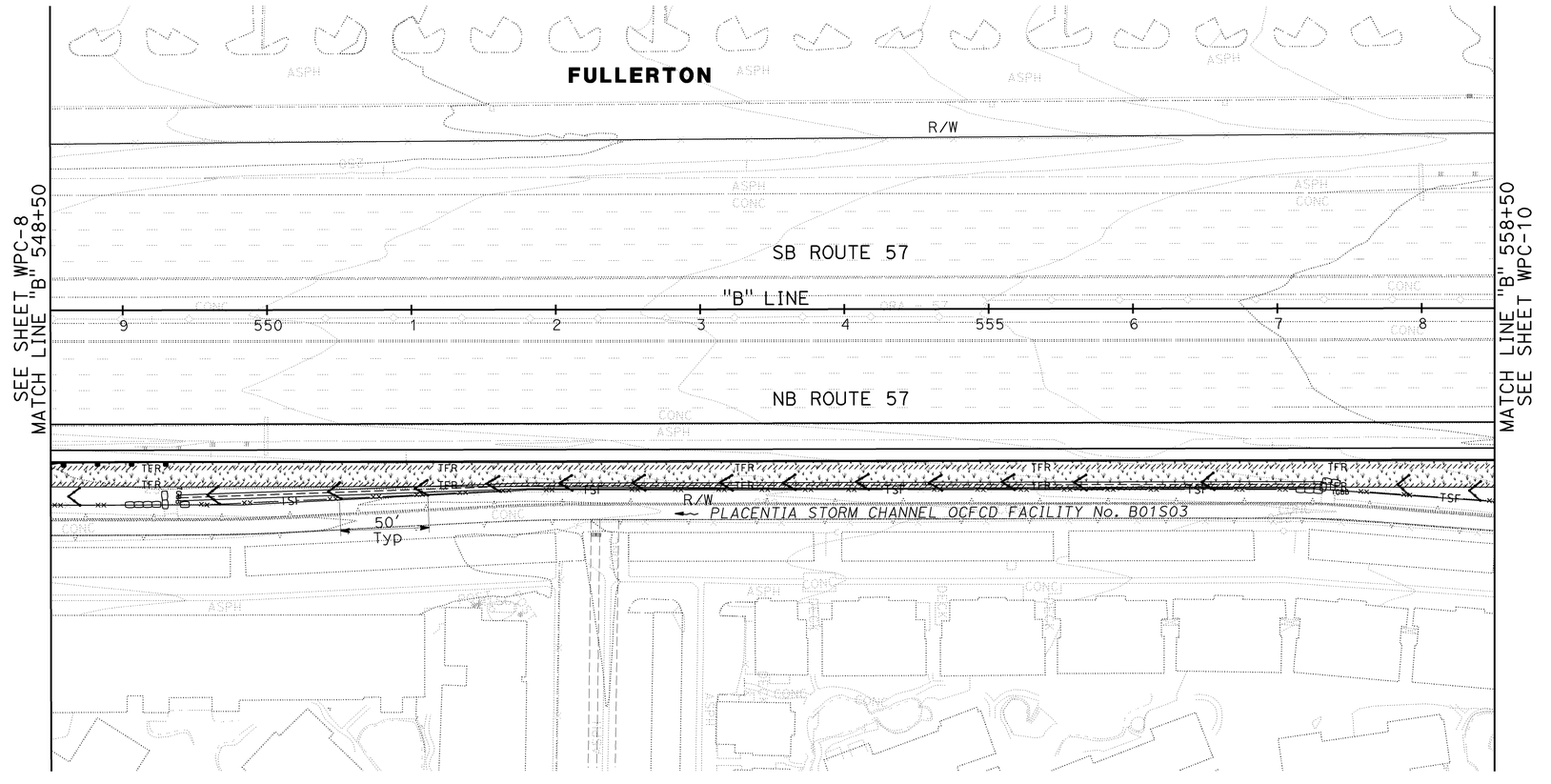

TEMPORARY WATER POLLUTION CONTROL PLAN

SCALE: 1" = 50'

WPC-9

THIS PLAN ACCURATE FOR TEMPORARY WATER POLLUTION CONTROL WORK ONLY.

LAST REVISION 08-01-08 | DATE PLOTTED => 16-DEC-2009 | TIME PLOTTED => 08:20

STATE OF CALIFORNIA - DEPARTMENT OF TRANSPORTATION | CONSULTANT FUNCTIONAL SUPERVISOR: RICHARD LUCERA | CHECKED BY: RICHARD LUCERA | CALCULATED-DESIGNED BY: SCOTT CARTWRIGHT | REVISED BY | DATE REVISED

H:\PDATA\10105878\CADD\Strmwater\Div\Merged CADD Files\c0F031gb009.dgn trstrk 16-DEC-2009 08:20

BORDER LAST REVISED 4/11/2008 | RELATIVE BORDER SCALE IS IN INCHES 0 1 2 3 | USERNAME => trstrk | DGN FILE => c0F031gb009.dgn | CU 12220 | EA 0F0311