Dist	COUNTY	ROUTE	POST MILES TOTAL PROJECT	SHEET No.	TOTAL SHEETS
12	Ora	91	0.9/5.4	1	885

STATE OF CALIFORNIA
DEPARTMENT OF TRANSPORTATION

PROJECT PLANS FOR CONSTRUCTION ON
STATE HIGHWAY

IN ORANGE COUNTY
IN ANAHEIM AND FULLERTON
FROM 0.3 MILE WEST OF BROOKHURST STREET TO 0.2 MILE EAST OF STATE COLLEGE BOULEVARD AND NEAR ANAHEIM AT ROUTE 55/91 SEPARATION AND IN IRVINE AT THE TRAFFIC MANAGEMENT CENTER AT 6681 MARINE WAY

TO BE SUPPLEMENTED BY STANDARD PLANS DATED 2010

LOCATION MAP

SHEET No.	INDEX OF PLANS DESCRIPTION
1	TITLE AND LOCATION MAP
2-12	TYPICAL CROSS SECTIONS
13	KEY MAP AND LINE INDEX
14-32	LAYOUTS
33-55	PROFILES AND SUPERELEVATION DIAGRAMS
56-100	CONSTRUCTION DETAILS
101-118	TEMPORARY WATER POLLUTION CONTROL PLANS AND QUANTITIES
119-136	CONTOUR GRADING
137-196	DRAINAGE PLANS, PROFILES, DETAILS AND QUANTITIES
197-209	EDGE DRAIN PLANS
210-228	UTILITY PLANS
229-230	CONSTRUCTION AREA SIGNS
231-298	STAGE CONSTRUCTION AND TRAFFIC HANDLING PLANS DETAILS AND QUANTITIES
299-318	TRAFFIC HANDLING (DETOUR) PLANS, DETAILS AND QUANTITIES
319-342	PAVEMENT DELINEATION PLANS, DETAILS AND QUANTITIES
343-400	SIGN PLANS, DETAILS AND QUANTITIES
401-409	SUMMARY OF QUANTITIES
410	RETAINING WALL KEY MAP
411-454	RETAINING WALL PLANS AND QUANTITIES
455-486	EROSION CONTROL AND HIGHWAY PLANTING
487-617	ELECTRICAL PLANS
618-633	REVISED STANDARD PLANS

STRUCTURE PLANS

634-660	NORTH ANAHEIM OH (WIDEN) Br No. 55-0216
661-690	ACACIA STREET UC (WIDEN) Br No. 55-0218
691-712	EAST STREET UC (WIDEN) Br No. 55-0245
713-733	EUCLID STREET UC (WIDEN) Br No. 55-0279
734-759	BROOKHURST Ave UC (WIDEN) Br No. 55-0280
760-779	STATE COLLEGE Blvd UC (WIDEN) Br No. 55-0852
780	SOUND WALL AND RETAINING WALL KEY PLAN
781-791	RETAINING WALL No. 173 Br No. 55E0122
792-808	RETAINING WALL No. 255 Br No. 55E0123
809-822	RETAINING WALL No. 315 Br No. 55E0124
823-843	RETAINING WALL No. 107 Br No. 55E0125
844-848	RETAINING WALL No. 159 Br No. 55E0126
849-873	RETAINING WALL No. 293 Br No. 55E0127
874-885	RETAINING WALL No. 307 Br No. 55E0128

THE STANDARD PLANS LIST APPLICABLE TO THIS CONTRACT IS INCLUDED IN THE NOTICE TO BIDDERS AND SPECIAL PROVISIONS BOOK.

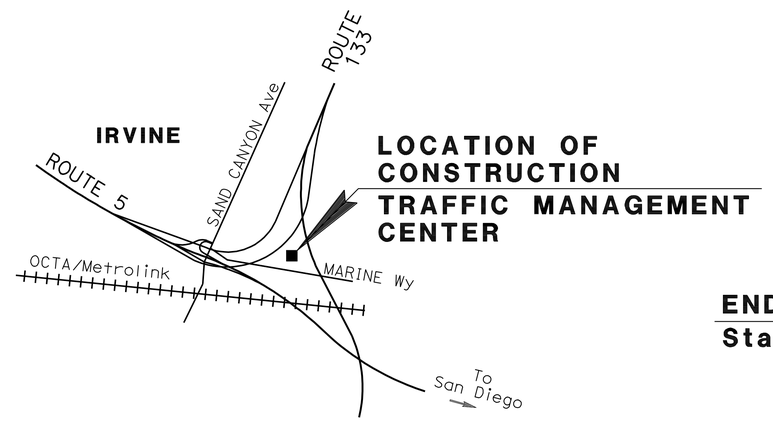

LOCATION OF CONSTRUCTION
TRAFFIC MANAGEMENT CENTER

END CONSTRUCTION
Sta "B" 341+50 PM 5.4

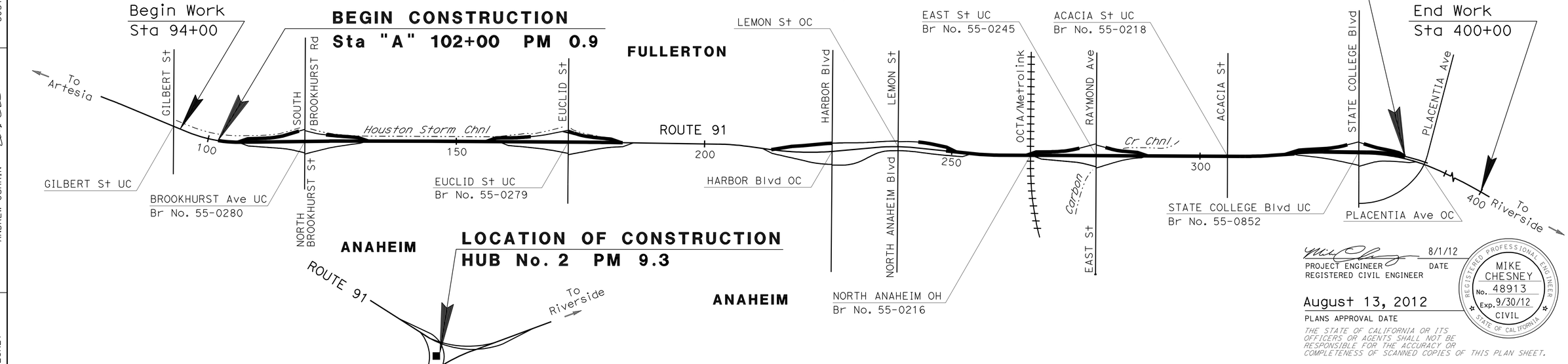

THE CONTRACTOR SHALL POSSESS THE CLASS (OR CLASSES) OF LICENSE AS SPECIFIED IN THE "NOTICE TO BIDDERS."

NO SCALE

APPROVED AS TO IMPACT ON STATE FACILITIES AND CONFORMANCE WITH APPLICABLE STATE STANDARDS AND PRACTICES AND THAT TECHNICAL OVERSIGHT WAS PERFORMED.

CONSULTANT DESIGN ENGINEER: MIKE CHESNEY
REGISTRATION No. C051748
LICENSE Exp DATE 06-30-14
DATE SIGNED 04-02-12
CALTRANS DESIGN OVERSIGHT APPROVAL: ANDREW OSHRIN

PROJECT ENGINEER REGISTERED CIVIL ENGINEER — DATE 8/1/12

August 13, 2012
PLANS APPROVAL DATE

REGISTERED PROFESSIONAL ENGINEER MIKE CHESNEY No. 48913 Exp. 9/30/12 CIVIL STATE OF CALIFORNIA

THE STATE OF CALIFORNIA OR ITS OFFICERS OR AGENTS SHALL NOT BE RESPONSIBLE FOR THE ACCURACY OR COMPLETENESS OF SCANNED COPIES OF THIS PLAN SHEET.

RBF CONSULTING
14725 ALTON PKWY
IRVINE, CA 92618

CONTRACT No.	12-0C5704
PROJECT ID	1200000079

LAST REVISION 00-00-00
DATE PLOTTED => 17-AUG-2012
TIME PLOTTED => 06:35

Dist	COUNTY	ROUTE	POST MILES TOTAL PROJECT	SHEET No.	TOTAL SHEETS
12	Ora	91	0.9/5.4	2	885

REGISTERED CIVIL ENGINEER 3/7/12 DATE

8-13-12
PLANS APPROVAL DATE

REGISTERED PROFESSIONAL ENGINEER JOSUE J. VAGLIENTY No. 70783 Exp. 6-30-13 CIVIL STATE OF CALIFORNIA

THE STATE OF CALIFORNIA OR ITS OFFICERS OR AGENTS SHALL NOT BE RESPONSIBLE FOR THE ACCURACY OR COMPLETENESS OF SCANNED COPIES OF THIS PLAN SHEET.

RBF CONSULTING
14725 ALTON PKWY
IRVINE, CA 92618

OCTA
550 S. MAIN STREET
ORANGE, CA 92863

NOTES:

1. DIMENSIONS OF THE PAVEMENT STRUCTURES (STRUCTURAL SECTIONS) ARE SUBJECT TO TOLERANCES SPECIFIED IN THE STANDARD SPECIFICATIONS.
2. SUPERELEVATION AS SHOWN ON SUPERELEVATION DIAGRAMS.
3. FOR CONCRETE PAVEMENT LANE SCHEMATICS, SEE STANDARD PLAN P18, CASE 1.
4. FOR RETAINING WALL AND SOUNDWALL LOCATIONS, SEE RETAINING WALL AND STRUCTURES PLANS.
5. FOR TYPE AND LOCATION OF CONCRETE BARRIERS, MBGR, CURB AND HMA DIKES, SEE LAYOUT PLANS, CONSTRUCTION DETAILS, AND SUMMARY OF QUANTITIES.
6. FOR LOCATIONS OF EDGE DRAINS, SEE EDGE DRAIN PLANS.

STRUCTURAL SECTION TYPES:

1A	1.05' JPCP 0.35' LCB
1B	1.05' JPCP 0.35' LCB 0.70' CLASS 2 AS
1C	1.05' JPCP (RSC) 0.35' LCBRS
1D	1.05' JPCP (RSC) 0.35' LCBRS 0.70' CLASS 2 AS
1E	0.20' RHMA-G 0.45' HMA (TYPE A) 0.25' ATPB 1.15' CLASS 2 AB
1F	0.20' RHMA-G 0.45' HMA (TYPE A) 0.25' ATPB 2.00' CLASS 2 AB
1G	0.10' RHMA-O 0.20' RHMA-G 0.65' HMA (TYPE A) 0.25' ATPB 1.15' CLASS 2 AB
1H	1.05' JPCP 0.35' ATPB 0.35' LCB
1I	0.20' RHMA-G 0.50' HMA (TYPE A) 1.40' CLASS 2 AB
1J	0.10' RHMA-O 0.20' RHMA-G 1.05' JPCP 0.35' LCB 0.70' CLASS 2 AS
1K	0.10' RHMA-O 0.20' RHMA-G 1.05' JPCP (RSC) 0.35' LCBRS 0.70' CLASS 2 AS
2A	0.20' RHMA-G 0.30' HMA (TYPE A) 0.80' CLASS 2 AB
2B	0.20' RHMA-G 0.30' HMA (TYPE A) 1.35' CLASS 2 AB
2C	0.20' RHMA-G 1.20' HMA (TYPE A)
2D	0.10' RHMA-O 0.20' RHMA-G 0.50' HMA (TYPE A) 0.80' CLASS 2 AB
2E	0.20' RHMA-G 0.30' HMA (TYPE A) 1.70' CLASS 2 AB
2F	0.10' RHMA-O 0.20' RHMA-G 0.50' HMA (TYPE A) 1.35' CLASS 2 AB
3A	0.20' RHMA-G 0.40' HMA (TYPE A) 1.15' CLASS 2 AB
3B	0.20' RHMA-G 0.45' HMA (TYPE A) 0.25' ATPB 0.85' CLASS 2 AB
3C	0.20' RHMA-G 0.40' HMA (TYPE A) 1.85' CLASS 2 AB
3D	0.20' RHMA-G 0.40' HMA (TYPE A) 1.00' CLASS 2 AB 1.10' CLASS 2 AS
3E	0.20' RHMA-G 0.45' HMA (TYPE A) 0.25' ATPB 0.60' CLASS 2 AB 1.10' CLASS 2 AS
3F	0.10' RHMA-O 0.20' RHMA-G 0.65' HMA (TYPE A) 0.25' ATPB 1.45' CLASS 2 AB
3G	0.10' RHMA-O 0.20' RHMA-G 0.65' HMA (TYPE A) 1.85' CLASS 2 AB
4	0.85' JPCP (RSC) 0.35' LCBRS 0.60' CLASS 2 AS
5	0.20' & Var RHMA-G OVERLAY
5A	0.10' RHMA-O 0.20' RHMA-G
6	0.20' & Var COLD PLANE AC Pvmt 0.20' & Var RHMA-G OVERLAY
7	0.55' HMA (TYPE A)
8	SLURRY SEAL
9	0.40' HMA (TYPE A) 0.65' CLASS 2 AB
10A	0.45' HMA (TYPE A) 0.35' CLASS 2 AB
10B	0.65' HMA (TYPE A) 0.35' CLASS 2 AB
10C	0.45' HMA (TYPE A) 0.35' CLASS 2 AB 0.55' CLASS 2 AS
11	1.00' HMA (TYPE A)
12	0.60' HMA (TYPE A) 1.20' CLASS 2 AB
13	1.00' HMA (TYPE A) 0.50' CLASS 2 AS
14	0.67' HMA (TYPE A)
15	1.00' HMA (TYPE A) 0.67' CLASS 2 AB

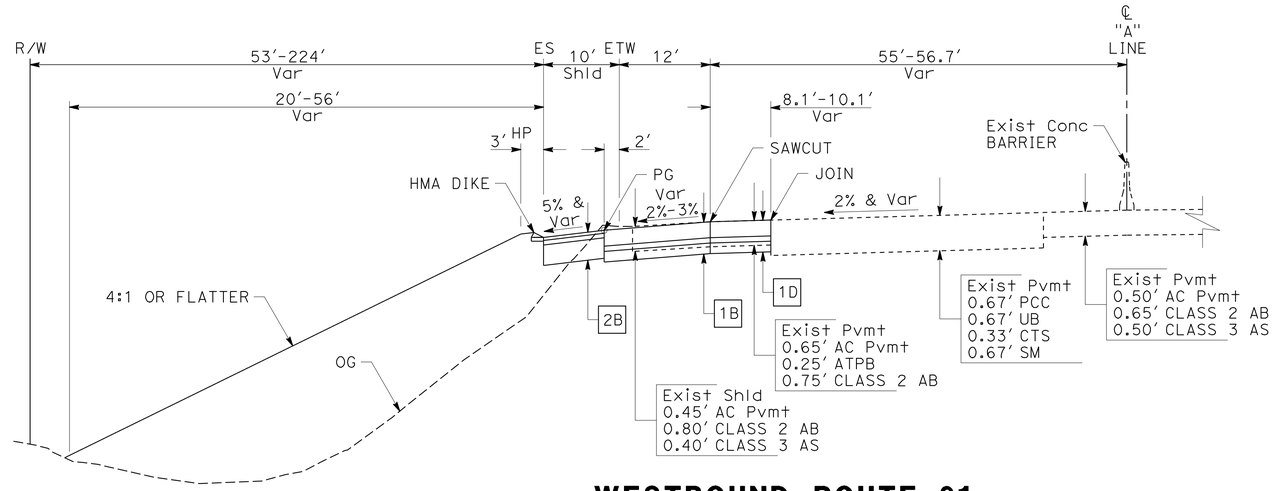

WESTBOUND ROUTE 91
"A" Sta 120+47.59 TO "A" Sta 127+54.92
"A" Sta 112+92.18 TO "A" Sta 118+51.14

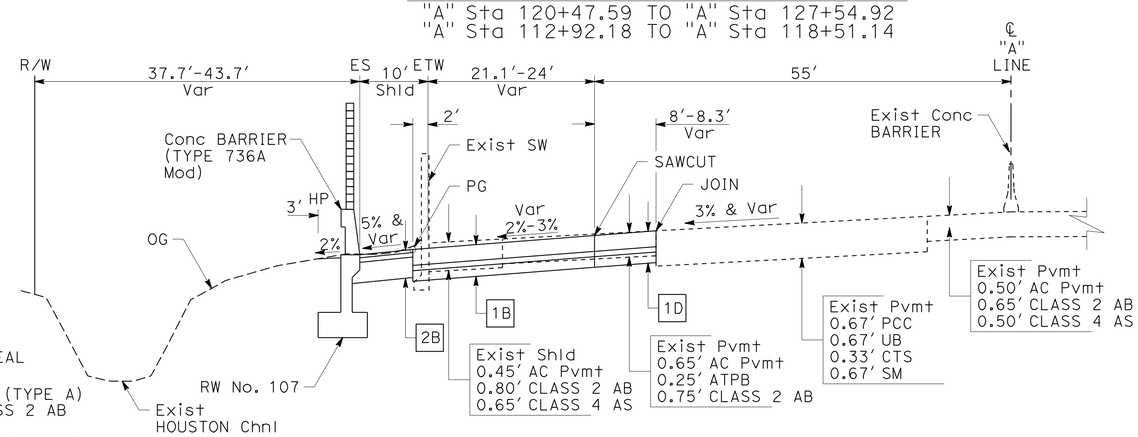

WESTBOUND ROUTE 91
"A" Sta 106+56.99 TO "A" Sta 108+00

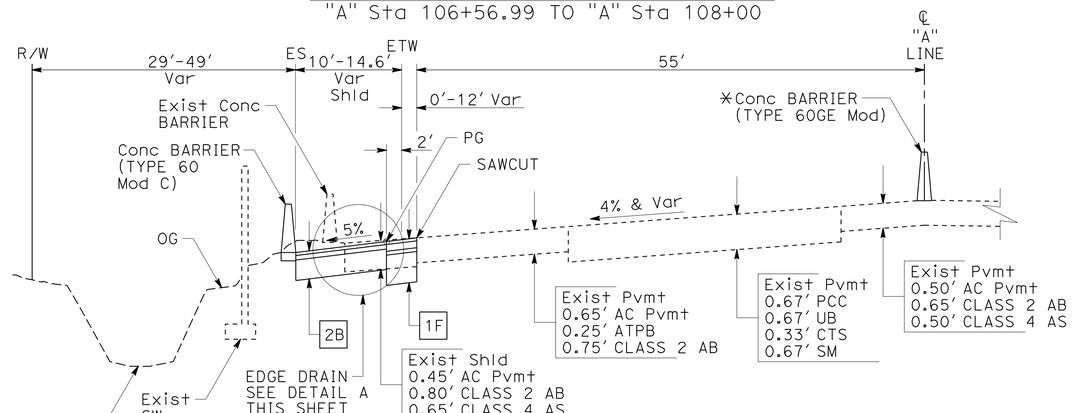

WESTBOUND ROUTE 91
"A" Sta 102+00 TO "A" Sta 106+56.99
*"A" Sta 104+40 TO "A" Sta 105+80

ABBREVIATIONS:

CHP - CALIFORNIA HIGHWAY PATROL
CTPB - CEMENT TREATED PERMEABLE BASE
CTS - CEMENT TREATED SUBGRADE
LCBRS - LEAN CONCRETE BASE RAPID SETTING
ML - MAINLINE
PMS - PLANT MIXED SURFACING
RSC - RAPID STRENGTH CONCRETE
UB - UNTREATED BASE

DESIGN DESIGNATION (WB ROUTE 91)

2008 ADT = 281,000 T = 9%
2035 ADT = 319,000 V = 70 MPH
ESAL = 132,000,000 TI = 16

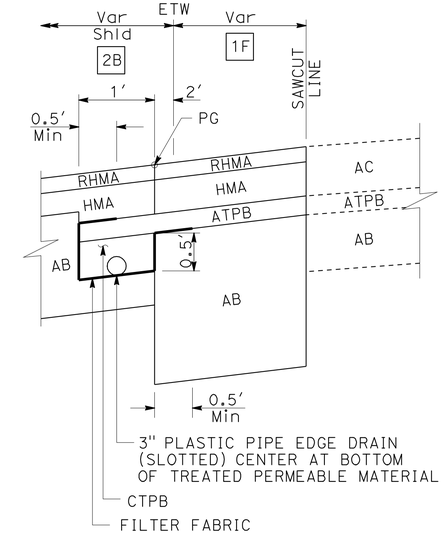

DETAIL A
FOR DETAILS NOT SHOWN, SEE Std PLAN No. D99A.

TYPICAL CROSS SECTIONS

NO SCALE

X-1

STATE OF CALIFORNIA - DEPARTMENT OF TRANSPORTATION
Caltrans

CONSULTANT FUNCTIONAL SUPERVISOR: MIKE CHESNEY
CALCULATED-DESIGNED BY: JOSUE VAGLIENTY
CHECKED BY: STEVEN NGUYEN
REVISED BY / DATE REVISED

LAST REVISION 06-08-10 | DATE PLOTTED => 13-AUG-2012 | TIME PLOTTED => 14:01

Dist	COUNTY	ROUTE	POST MILES TOTAL PROJECT	SHEET No.	TOTAL SHEETS
12	Ora	91	0.9/5.4	3	885

REGISTERED CIVIL ENGINEER 3/7/12 DATE

8-13-12
PLANS APPROVAL DATE

REGISTERED PROFESSIONAL ENGINEER JOSUE J. VAGLIENTY No. 70783 Exp. 6-30-13 CIVIL STATE OF CALIFORNIA

THE STATE OF CALIFORNIA OR ITS OFFICERS OR AGENTS SHALL NOT BE RESPONSIBLE FOR THE ACCURACY OR COMPLETENESS OF SCANNED COPIES OF THIS PLAN SHEET.

RBF CONSULTING
14725 ALTON PKWY
IRVINE, CA 92618

OCTA
550 S. MAIN STREET
ORANGE, CA 92863

NOTE:
1. ADJUST CLASS 2 AB DEPTH, AS REQUIRED FOR STRUCTURAL SECTION TYPE 1E ON "A" 131+66.88 TO "A" 147+85.

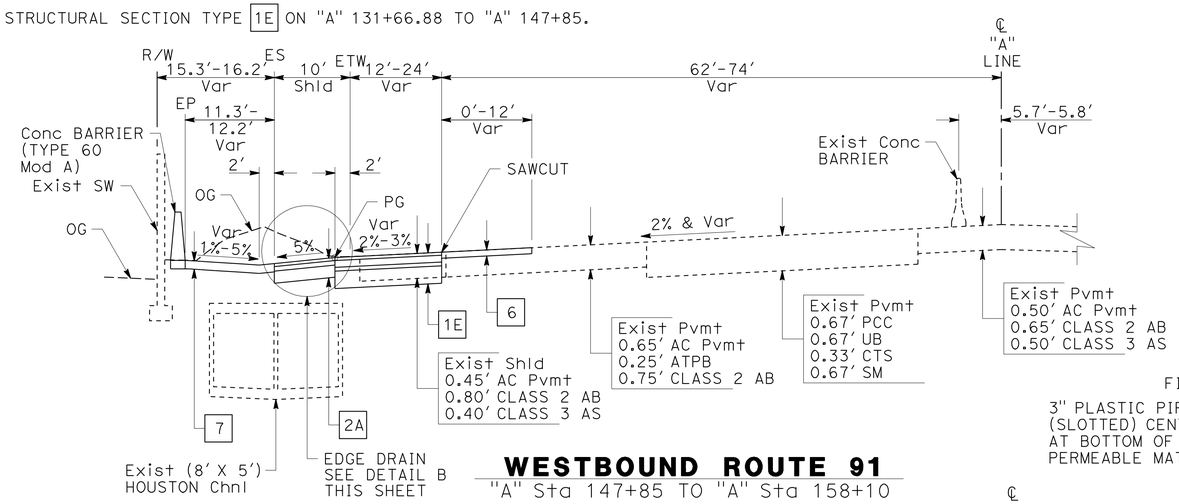

WESTBOUND ROUTE 91
"A" Sta 147+85 TO "A" Sta 158+10

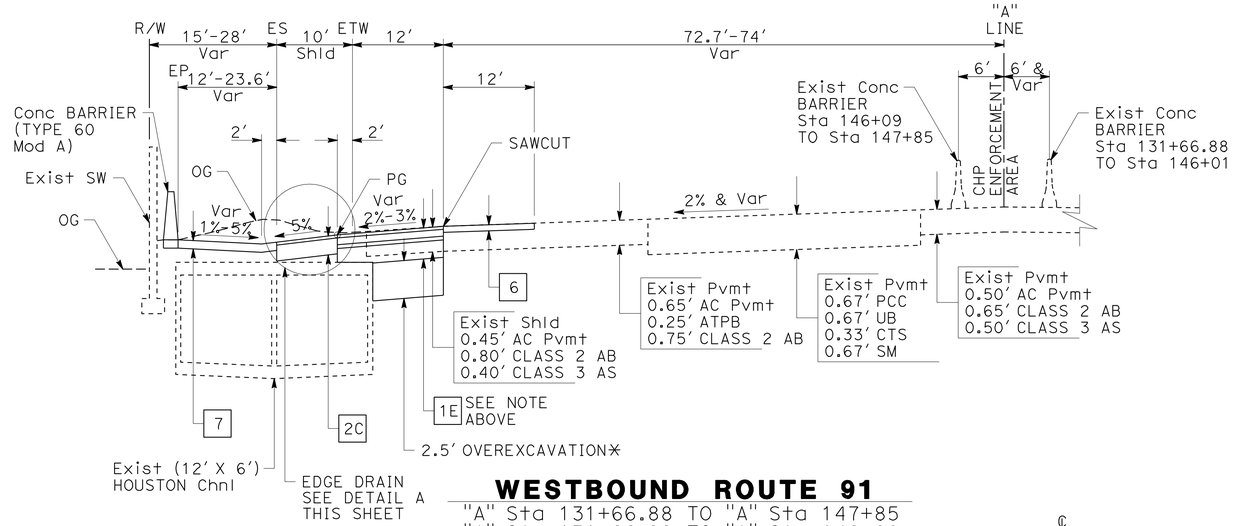

WESTBOUND ROUTE 91
"A" Sta 131+66.88 TO "A" Sta 147+85
*"A" Sta 131+66.88 TO "A" Sta 146+00

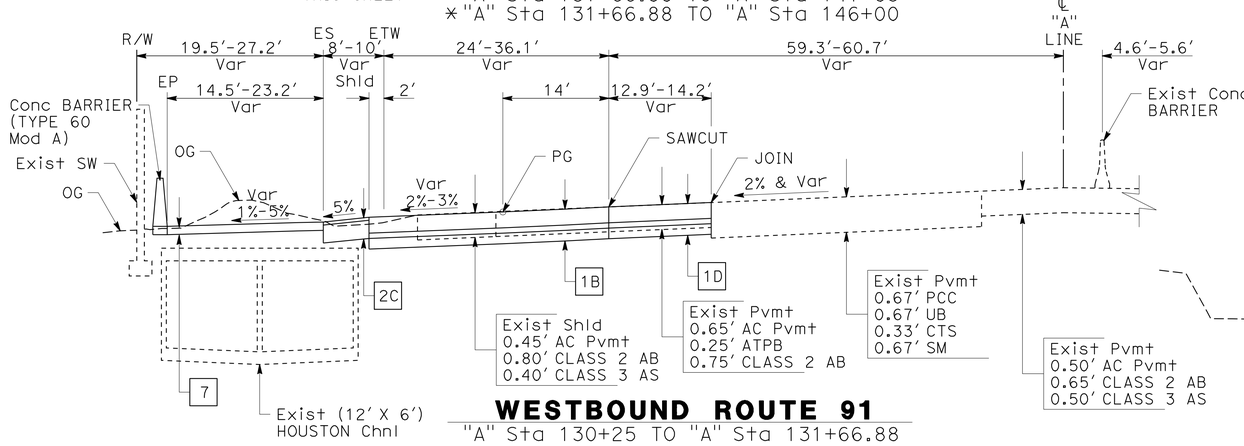

WESTBOUND ROUTE 91
"A" Sta 130+25 TO "A" Sta 131+66.88

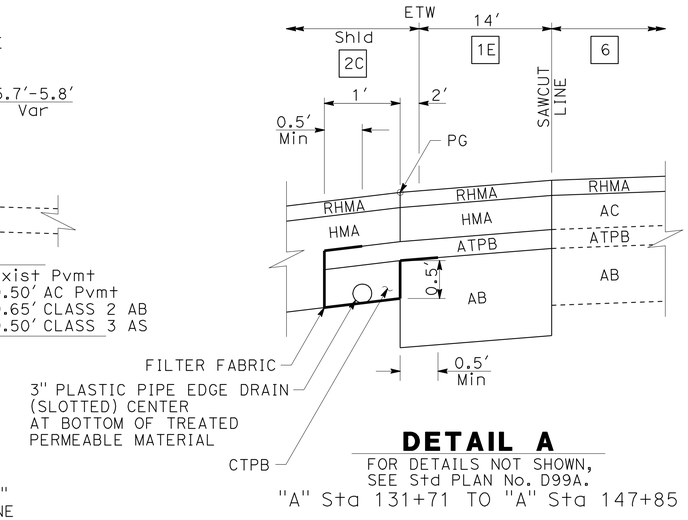

DETAIL A
FOR DETAILS NOT SHOWN, SEE Std PLAN No. D99A.
"A" Sta 131+71 TO "A" Sta 147+85

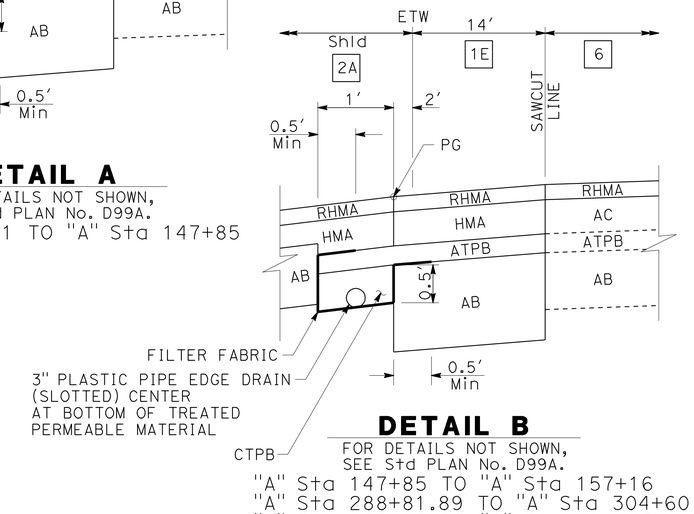

DETAIL B
FOR DETAILS NOT SHOWN, SEE Std PLAN No. D99A.
"A" Sta 147+85 TO "A" Sta 157+16
"A" Sta 288+81.89 TO "A" Sta 304+60
"A" Sta 306+50 TO "A" Sta 314+48

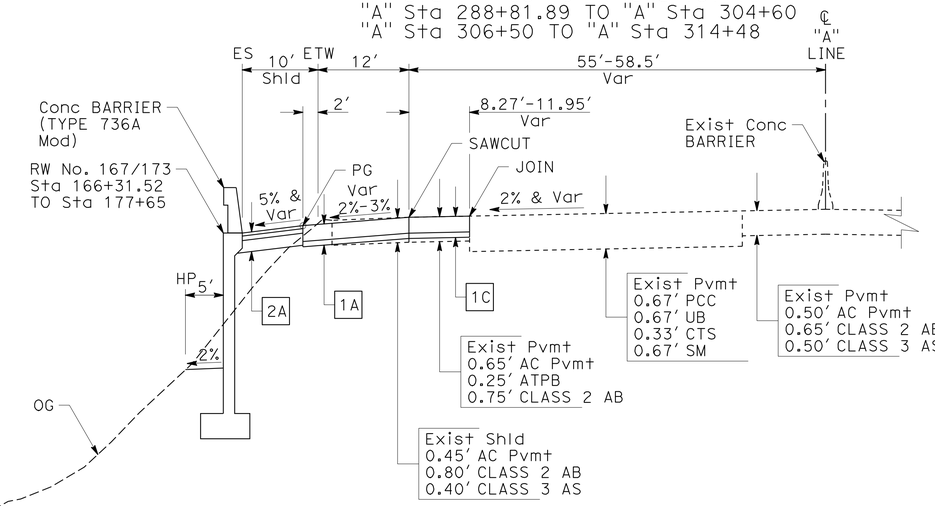

WESTBOUND ROUTE 91
"A" Sta 173+65.91 TO "A" Sta 179+53.38
"A" Sta 163+03.75 TO "A" Sta 171+43.45

TYPICAL CROSS SECTIONS
NO SCALE

X-2

STATE OF CALIFORNIA - DEPARTMENT OF TRANSPORTATION
Caltrans
CONSULTANT FUNCTIONAL SUPERVISOR: MIKE CHESNEY
CALCULATED-DESIGNED BY: STEVEN NGUYEN
CHECKED BY: JOSUE VAGLIENTY
REVISED BY
DATE REVISED

LAST REVISION 06-08-10
DATE PLOTTED => 13-AUG-2012
TIME PLOTTED => 14:01

NOTE:
1. FOR ADDITIONAL INFORMATION, SEE SAFETY PROJECT PLANS 12-0K5304.

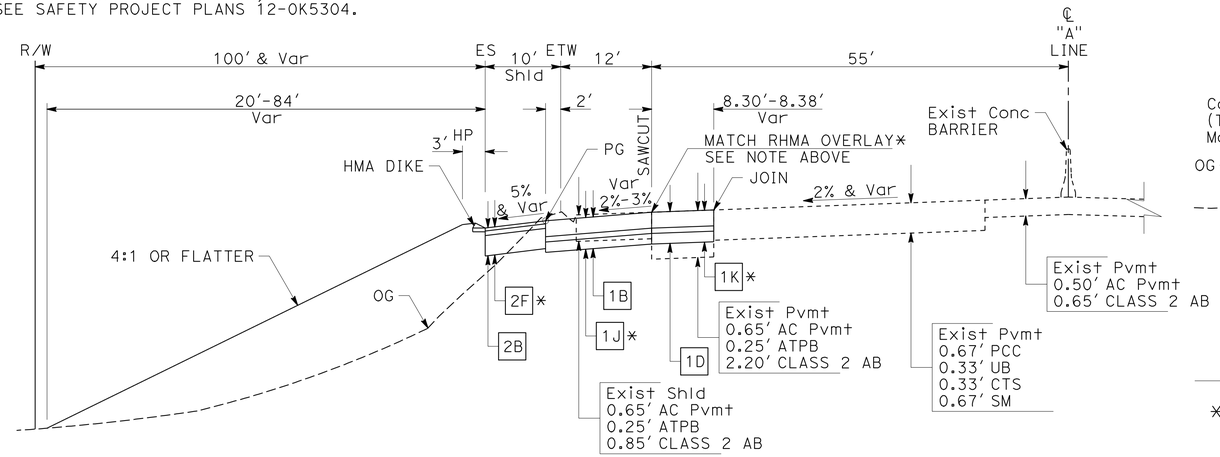

WESTBOUND ROUTE 91

"A" Sta 280+07.10 TO "A" Sta 284+70
"A" Sta 272+62.84 TO "A" Sta 278+11.92
*"A" Sta 272+62.84 TO "A" Sta 276+40

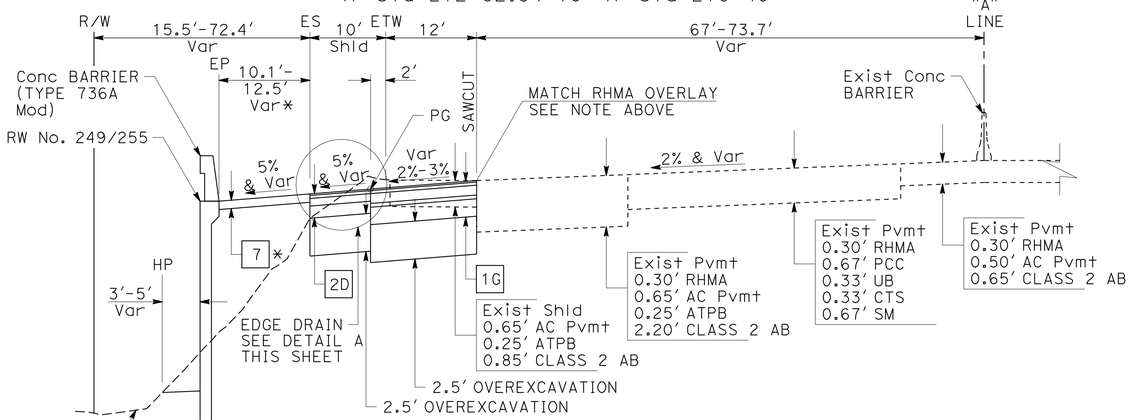

WESTBOUND ROUTE 91

"A" Sta 250+23 TO "A" Sta 264+02.93
*"A" Sta 250+23 TO "A" Sta 254+60.86

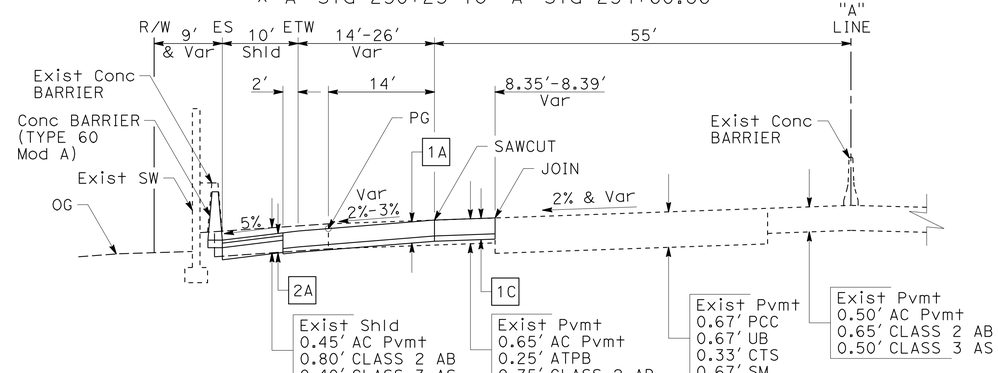

WESTBOUND ROUTE 91

"A" Sta 182+25 TO "A" Sta 183+70

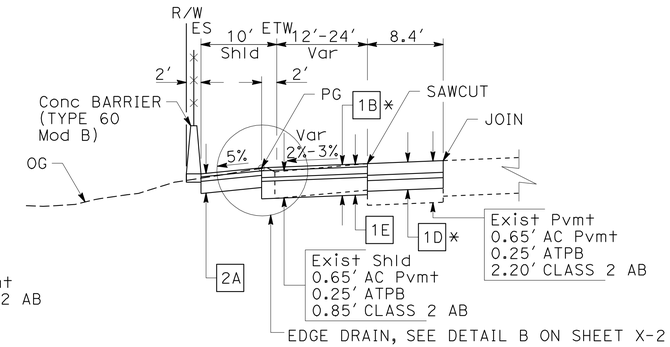

EDGE CONDITION

"A" Sta 288+58.75 TO "A" Sta 292+29
*"A" Sta 288+58.75 TO "A" Sta 288+81.89

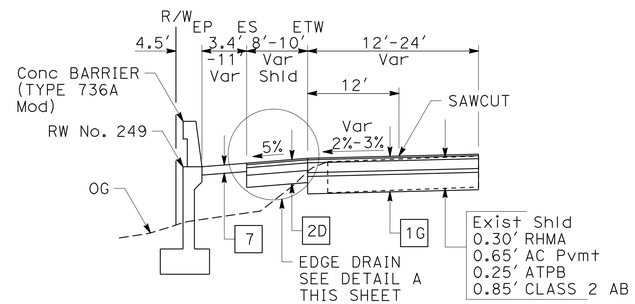

EDGE CONDITION

"A" Sta 248+81.65 TO "A" Sta 250+23

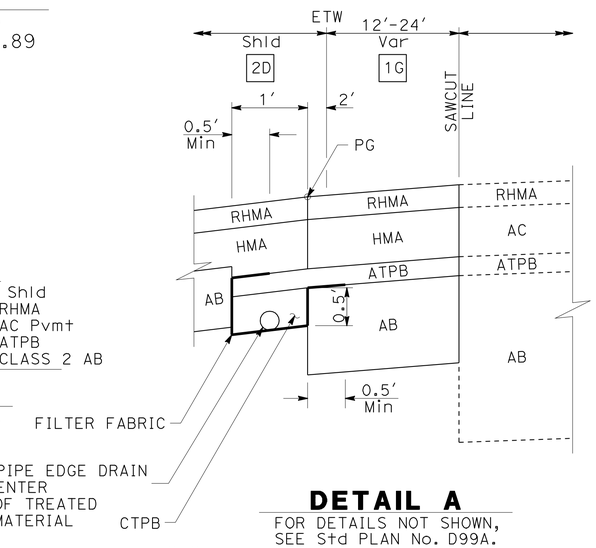

DETAIL A

FOR DETAILS NOT SHOWN, SEE Std PLAN No. D99A.
"A" Sta 248+81.65 TO "A" Sta 263+95

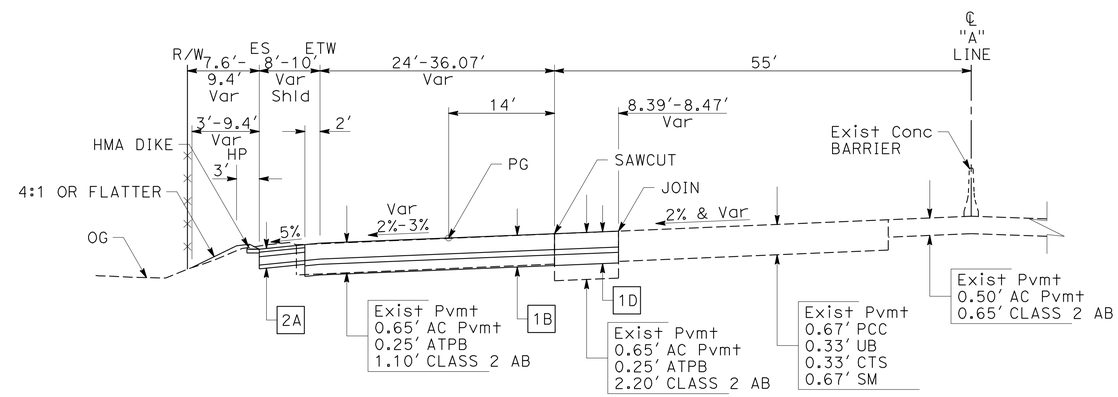

WESTBOUND ROUTE 91

"A" Sta 287+40 TO "A" Sta 288+81.89

TYPICAL CROSS SECTIONS

NO SCALE

X-3

Dist	COUNTY	ROUTE	POST MILES TOTAL PROJECT	SHEET No.	TOTAL SHEETS
12	Ora	91	0.9/5.4	4	885

REGISTERED CIVIL ENGINEER 6/21/12 DATE

8-13-12
PLANS APPROVAL DATE

REGISTERED PROFESSIONAL ENGINEER JOSUE J. VAGLIENTY No. 70783 Exp. 6-30-13 CIVIL STATE OF CALIFORNIA

THE STATE OF CALIFORNIA OR ITS OFFICERS OR AGENTS SHALL NOT BE RESPONSIBLE FOR THE ACCURACY OR COMPLETENESS OF SCANNED COPIES OF THIS PLAN SHEET.

RBF CONSULTING
14725 ALTON PKWY
IRVINE, CA 92618

OCTA
550 S. MAIN STREET
ORANGE, CA 92863

REVISED BY	DATE REVISED
STEVEN NGUYEN	JOSUE VAGLIENTY
CALCULATED-DESIGNED BY	CHECKED BY
CONSULTANT FUNCTIONAL SUPERVISOR	MIKE CHESNEY

STATE OF CALIFORNIA - DEPARTMENT OF TRANSPORTATION
Caltrans

LAST REVISION 06-08-10 | DATE PLOTTED => 17-AUG-2012 | TIME PLOTTED => 06:35

Dist	COUNTY	ROUTE	POST MILES TOTAL PROJECT	SHEET No.	TOTAL SHEETS
12	Ora	91	0.9/5.4	5	885

REGISTERED CIVIL ENGINEER 3/7/12 DATE

8-13-12
PLANS APPROVAL DATE

REGISTERED PROFESSIONAL ENGINEER JOSUE J. VAGLIENTY No. 70783 Exp. 6-30-13 CIVIL STATE OF CALIFORNIA

THE STATE OF CALIFORNIA OR ITS OFFICERS OR AGENTS SHALL NOT BE RESPONSIBLE FOR THE ACCURACY OR COMPLETENESS OF SCANNED COPIES OF THIS PLAN SHEET.

RBF CONSULTING
14725 ALTON PKWY
IRVINE, CA 92618

OCTA
550 S. MAIN STREET
ORANGE, CA 92863

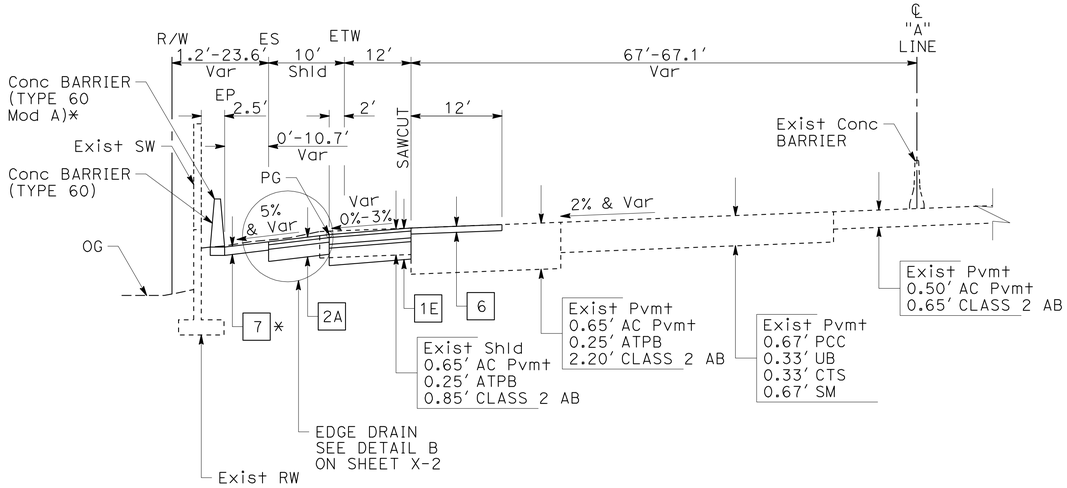

WESTBOUND ROUTE 91

"A" Sta 307+50 TO "A" Sta 316+62.50
*"A" Sta 307+50 TO "A" Sta 310+90

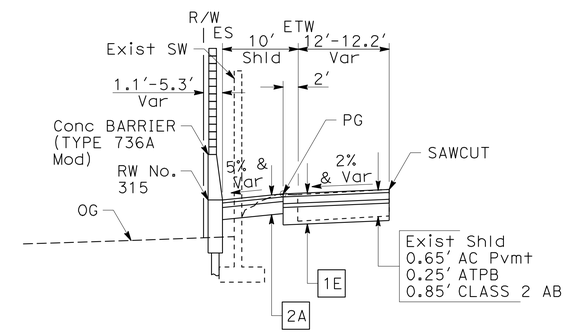

EDGE CONDITION

"A" Sta 314+10 TO "A" Sta 316+78

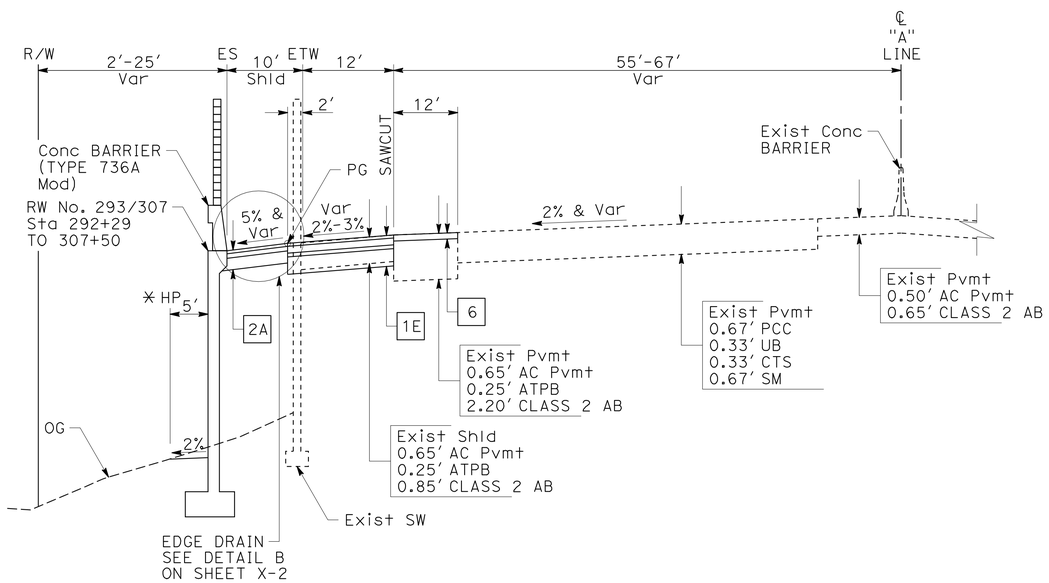

WESTBOUND ROUTE 91

"A" Sta 306+45.97 TO "A" Sta 307+50
"A" Sta 292+29 TO "A" Sta 304+63.78
*"A" Sta 300+54 TO "A" Sta 304+36

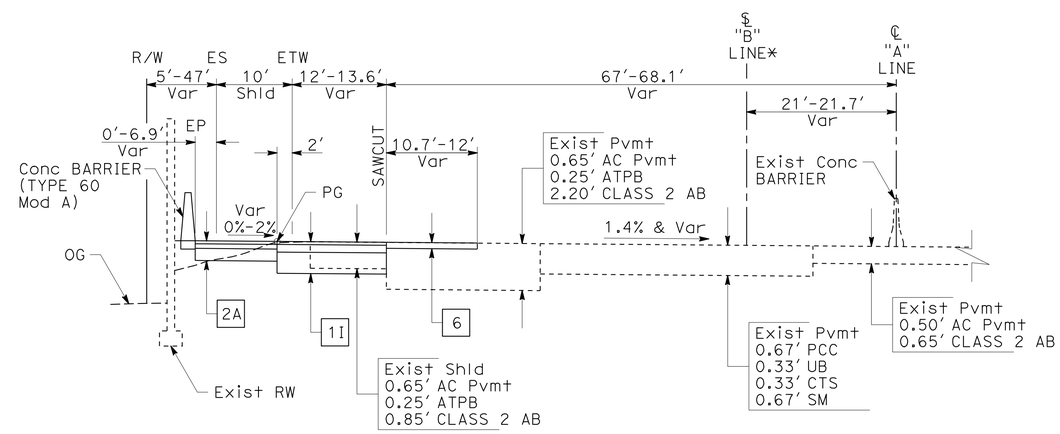

WESTBOUND ROUTE 91

"A" Sta 316+62.50 TO "B" Sta 320+00
*"B" Sta 319+02.37 TO "B" Sta 320+00

TYPICAL CROSS SECTIONS

NO SCALE

X-4

STATE OF CALIFORNIA - DEPARTMENT OF TRANSPORTATION
Caltrans

CONSULTANT FUNCTIONAL SUPERVISOR: MIKE CHESNEY
CALCULATED-DESIGNED BY: STEVEN NGUYEN
CHECKED BY: JOSUE VAGLIENTY
REVISED BY / DATE REVISED

LAST REVISION 06-08-10 | DATE PLOTTED => 13-AUG-2012 | TIME PLOTTED => 14:01

Dist	COUNTY	ROUTE	POST MILES TOTAL PROJECT	SHEET No.	TOTAL SHEETS
12	Ora	91	0.9/5.4	6	885

REGISTERED CIVIL ENGINEER 3/7/12 DATE

8-13-12
PLANS APPROVAL DATE

REGISTERED PROFESSIONAL ENGINEER JOSUE J. VAGLIENTY No. 70783 Exp. 6-30-13 CIVIL STATE OF CALIFORNIA

THE STATE OF CALIFORNIA OR ITS OFFICERS OR AGENTS SHALL NOT BE RESPONSIBLE FOR THE ACCURACY OR COMPLETENESS OF SCANNED COPIES OF THIS PLAN SHEET.

RBF CONSULTING
14725 ALTON PKWY
IRVINE, CA 92618

OCTA
550 S. MAIN STREET
ORANGE, CA 92863

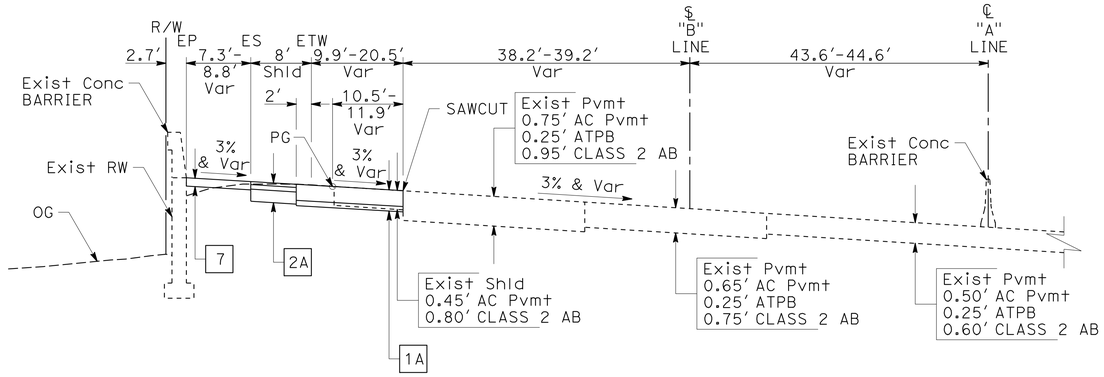

WESTBOUND ROUTE 91

"B" Sta 340+10 TO "B" Sta 341+50

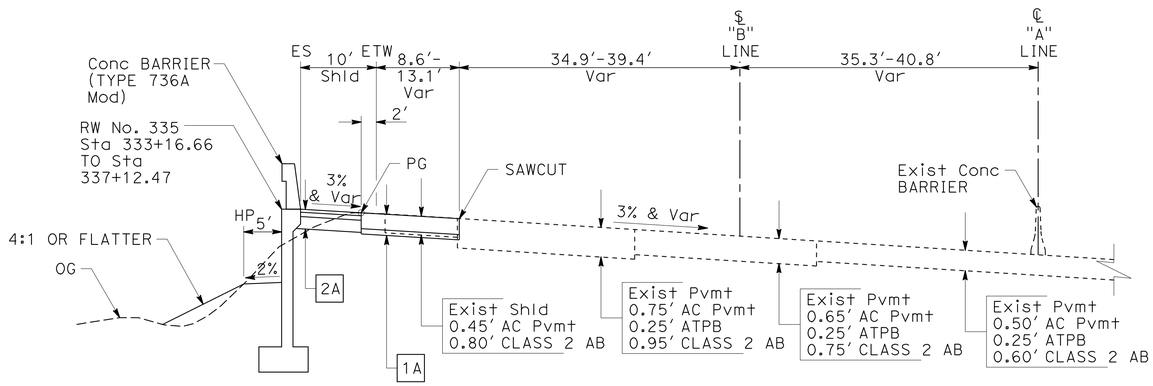

WESTBOUND ROUTE 91

"B" Sta 333+04 TO "B" Sta 337+43.55

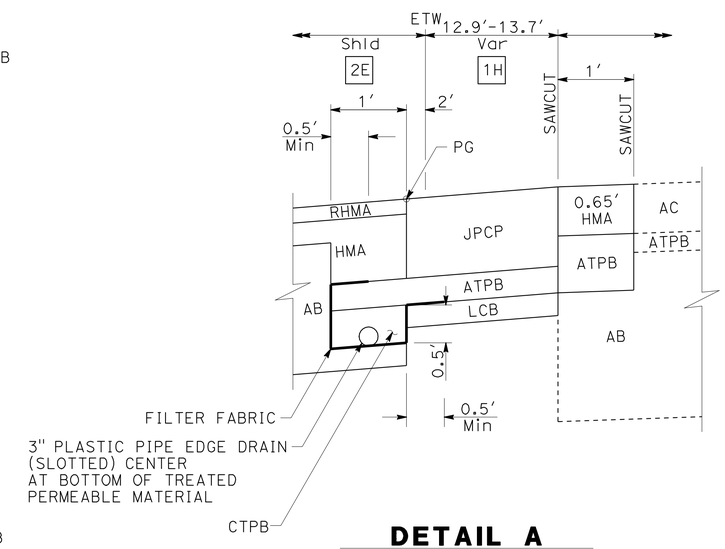

DETAIL A

FOR DETAILS NOT SHOWN, SEE Std PLAN No. D99A.

"B" Sta 327+63 TO "B" Sta 331+00

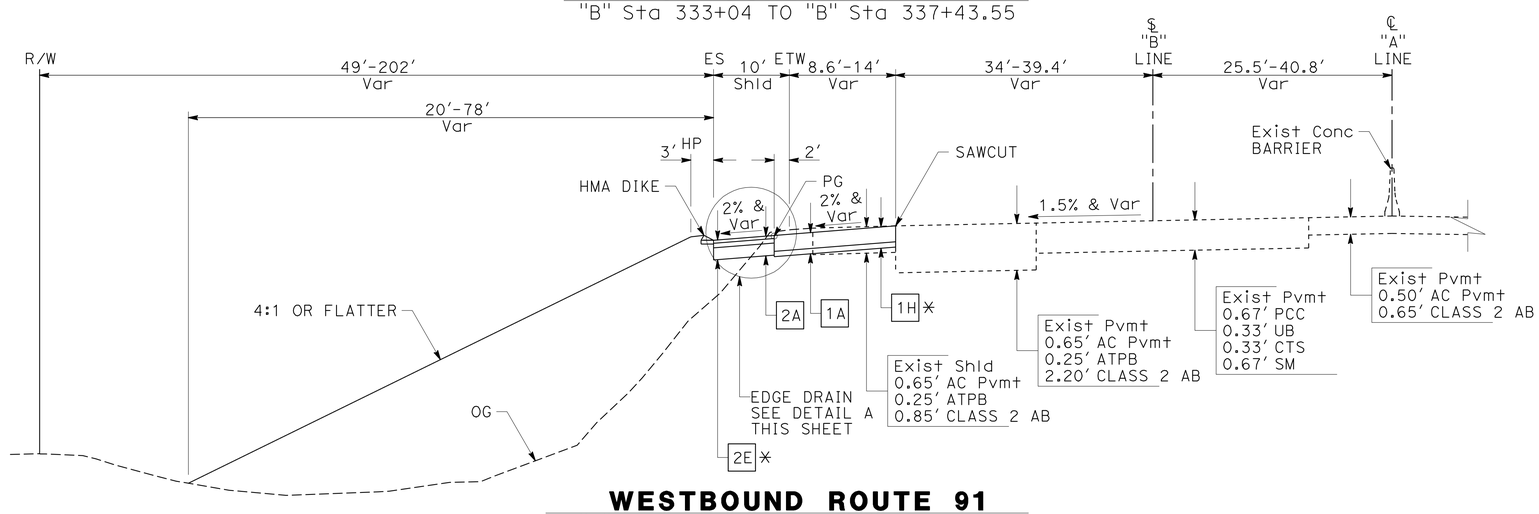

WESTBOUND ROUTE 91

"B" Sta 324+97.69 TO "B" Sta 331+00

✱"B" Sta 327+63 TO "B" Sta 331+00

TYPICAL CROSS SECTIONS

NO SCALE

X-5

STATE OF CALIFORNIA - DEPARTMENT OF TRANSPORTATION
Caltrans

CONSULTANT FUNCTIONAL SUPERVISOR: MIKE CHESNEY
CALCULATED-DESIGNED BY: STEVEN NGUYEN
CHECKED BY: JOSUE VAGLIENTY
REVISED BY
DATE REVISED

LAST REVISION 06-08-10
DATE PLOTTED => 17-AUG-2012
TIME PLOTTED => 06:35

NOTES:

1. ADJUST CLASS 2 AB DEPTH, AS REQUIRED FOR STRUCTURAL SECTION TYPE 3C ON "BH2" RAMP.
2. FOR PAVEMENT EDGE TREATMENT DETAILS, SEE DETAIL "B" ON REVISED STANDARD PLAN RSP P76.

Dist	COUNTY	ROUTE	POST MILES TOTAL PROJECT	SHEET No.	TOTAL SHEETS
12	Ora	91	0.9/5.4	7	885

REGISTERED CIVIL ENGINEER 3/7/12 DATE

8-13-12
PLANS APPROVAL DATE

REGISTERED PROFESSIONAL ENGINEER JOSUE J. VAGLIENTY No. 70783 Exp. 6-30-13 CIVIL STATE OF CALIFORNIA

THE STATE OF CALIFORNIA OR ITS OFFICERS OR AGENTS SHALL NOT BE RESPONSIBLE FOR THE ACCURACY OR COMPLETENESS OF SCANNED COPIES OF THIS PLAN SHEET.

RBF CONSULTING
14725 ALTON PKWY
IRVINE, CA 92618

OCTA
550 S. MAIN STREET
ORANGE, CA 92863

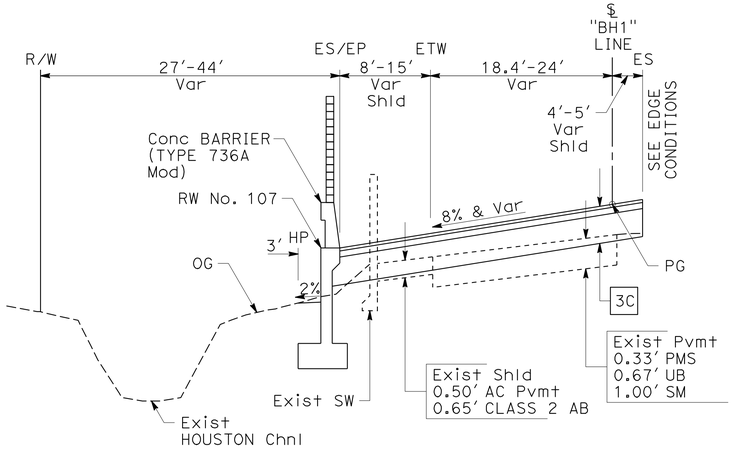

"BH1" RAMP

Sta 12+91.12 TO Sta 17+50

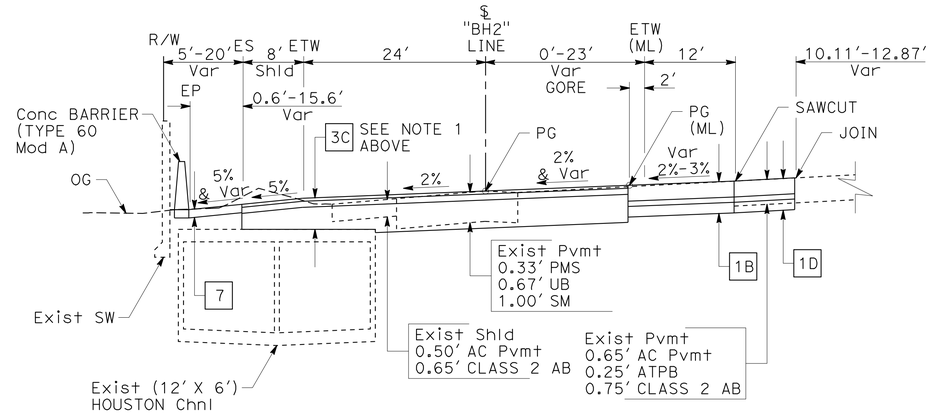

"BH2" RAMP

Sta 27+54.36 TO Sta 30+25

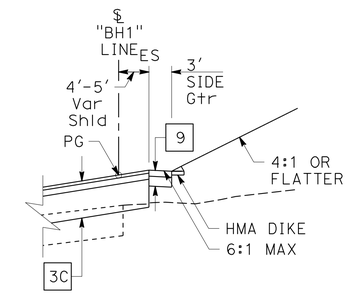

EDGE CONDITION

"BH1" Sta 14+35.10 TO "BH1" Sta 17+00

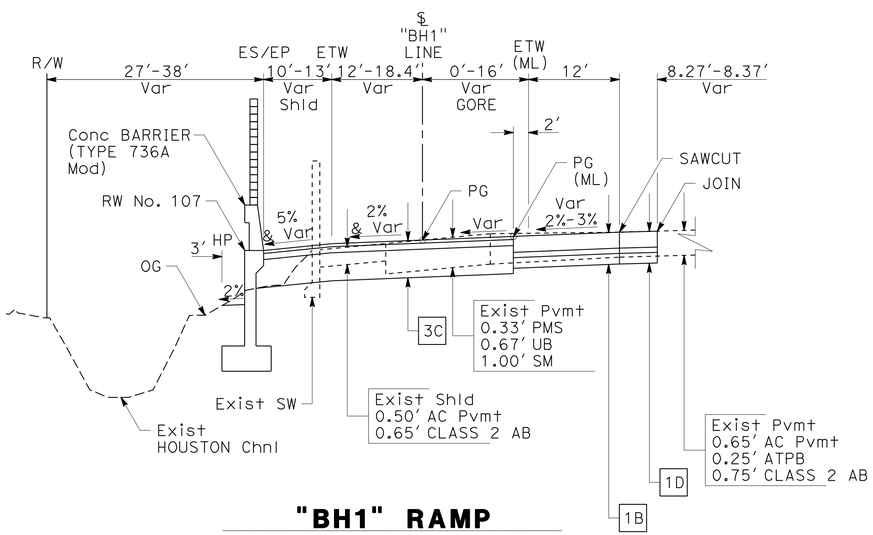

"BH1" RAMP

Sta 8+00 TO Sta 12+91.12

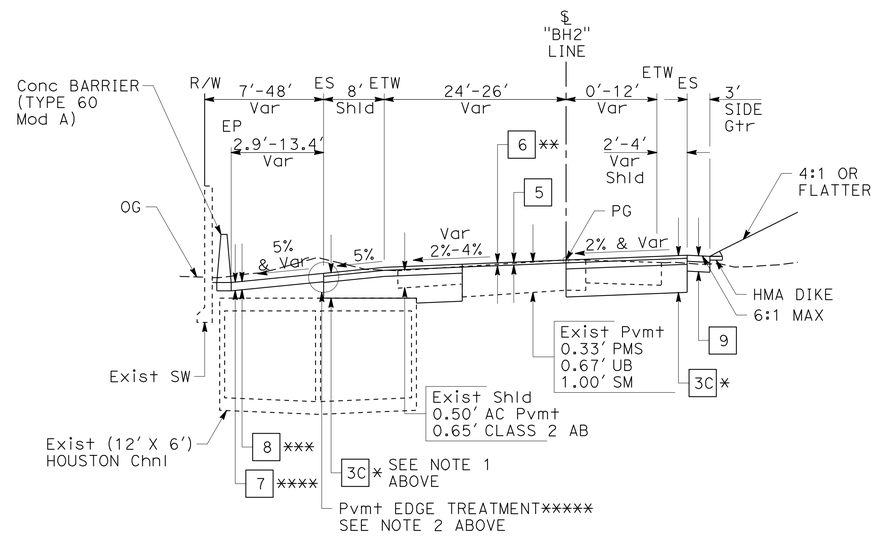

"BH2" RAMP

Sta 22+45.41 TO Sta 27+54.36
*Sta 24+00 TO Sta 27+54.36
**Sta 25+75 TO Sta 27+54.36
***Sta 22+45.41 TO Sta 23+50
****Sta 25+23.67 TO Sta 27+54.36
*****Sta 24+06.76 TO Sta 25+23.67

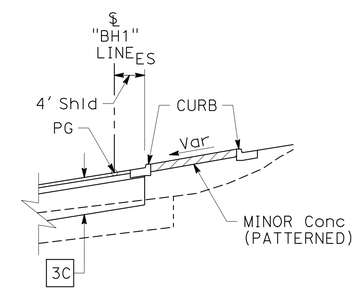

EDGE CONDITION

"BH1" Sta 12+91.12 TO "BH1" Sta 13+91.87

TYPICAL CROSS SECTIONS

NO SCALE

X-6

STATE OF CALIFORNIA - DEPARTMENT OF TRANSPORTATION

Caltrans

CONSULTANT FUNCTIONAL SUPERVISOR: MIKE CHESNEY

CALCULATED-DESIGNED BY: JOSUE VAGLIENTY

CHECKED BY: STEVEN NGUYEN

REVISED BY / DATE REVISED

LAST REVISION 06-08-10 | DATE PLOTTED => 13-AUG-2012 | TIME PLOTTED => 14:02

NOTE:
1. ADJUST CLASS 2 AB DEPTH, AS REQUIRED FOR STRUCTURAL SECTION TYPE 3A ON "EU2" RAMP.

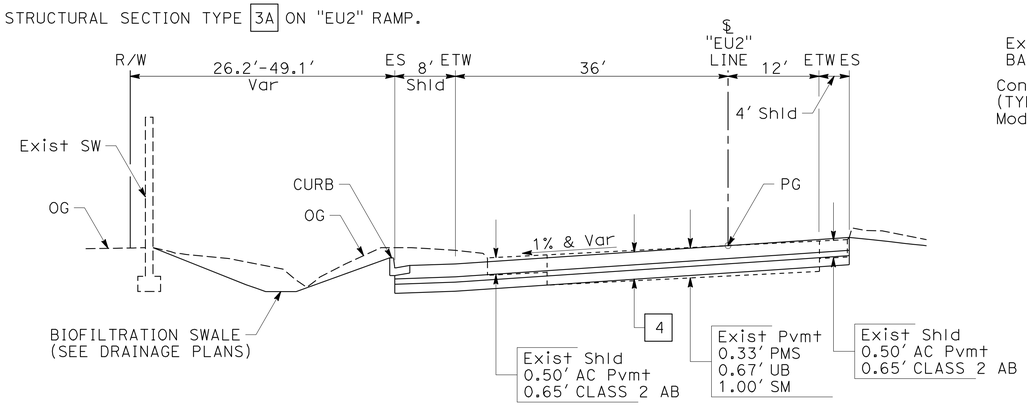

"EU2" RAMP
Sta 72+89.32 TO Sta 74+45

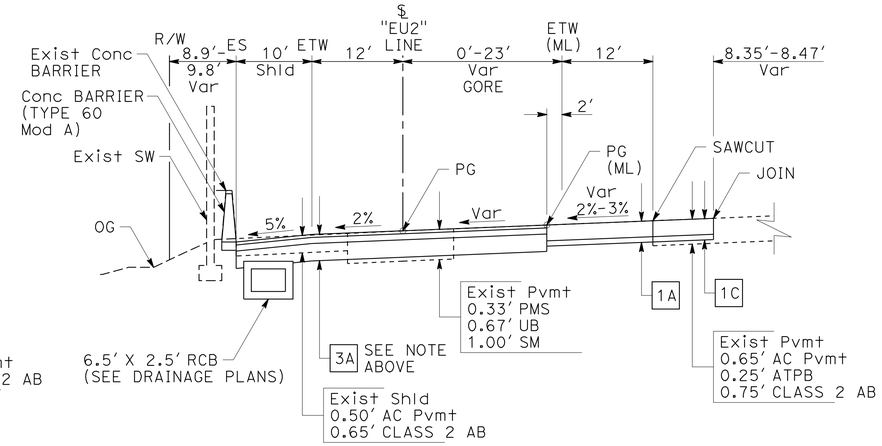

"EU2" RAMP
Sta 79+52.51 TO Sta 82+25

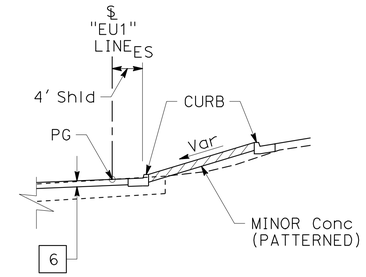

EDGE CONDITION
"EU1" Sta 63+02.65 TO "EU1" Sta 64+03.58

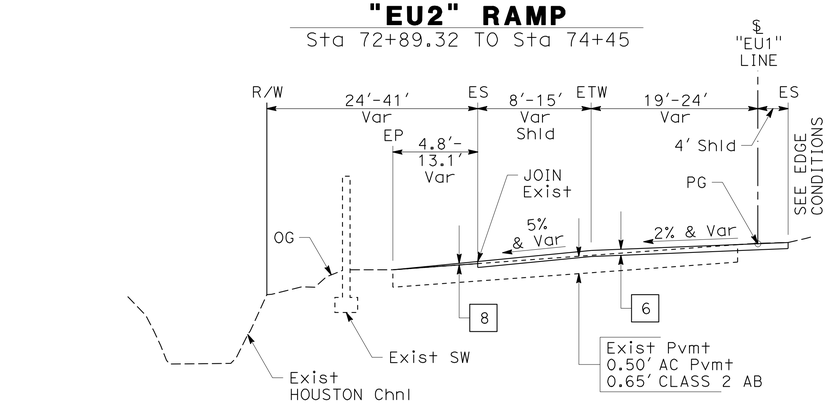

"EU1" RAMP
Sta 63+03.65 TO Sta 65+00

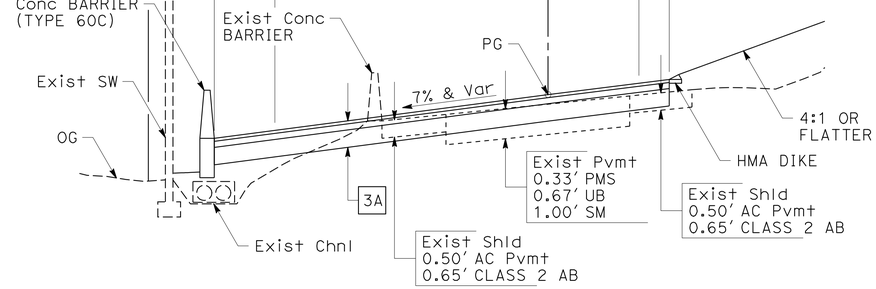

"EU2" RAMP
Sta 75+90 TO Sta 79+52.51

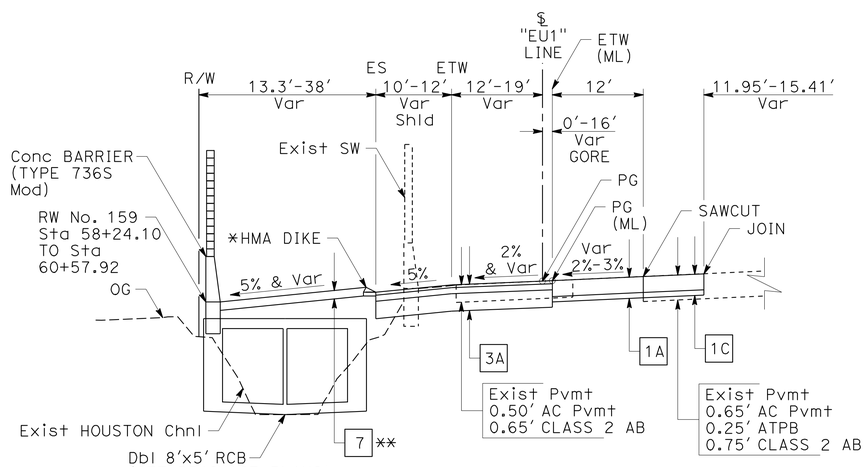

"EU1" RAMP
Sta 58+10 TO Sta 63+03.65
*Sta 59+53 TO Sta 60+76
**Sta 58+10 TO Sta 59+31

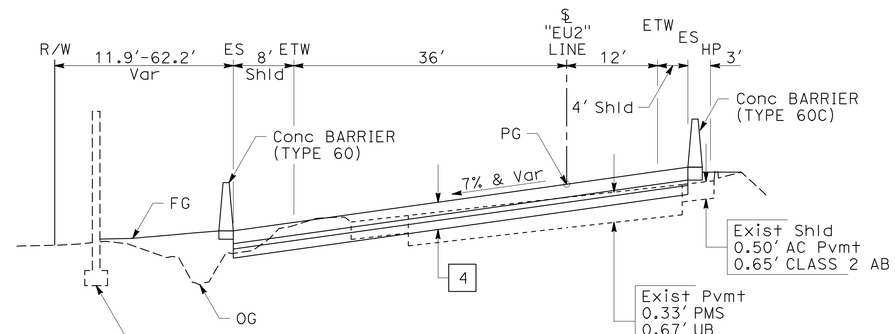

"EU2" RAMP
Sta 74+45 TO Sta 75+90

TYPICAL CROSS SECTIONS
NO SCALE

X-7

Dist	COUNTY	ROUTE	POST MILES TOTAL PROJECT	SHEET No.	TOTAL SHEETS
12	Ora	91	0.9/5.4	8	885

REGISTERED CIVIL ENGINEER 3/7/12 DATE
8-13-12
PLANS APPROVAL DATE

REGISTERED PROFESSIONAL ENGINEER JOSUE J. VAGLIENTY No. 70783 Exp. 6-30-13 CIVIL STATE OF CALIFORNIA

THE STATE OF CALIFORNIA OR ITS OFFICERS OR AGENTS SHALL NOT BE RESPONSIBLE FOR THE ACCURACY OR COMPLETENESS OF SCANNED COPIES OF THIS PLAN SHEET.

RBF CONSULTING
14725 ALTON PKWY
IRVINE, CA 92618

OCTA
550 S. MAIN STREET
ORANGE, CA 92863

STATE OF CALIFORNIA - DEPARTMENT OF TRANSPORTATION
Caltrans
CONSULTANT FUNCTIONAL SUPERVISOR: MIKE CHESNEY
CALCULATED-DESIGNED BY: JOSUE VAGLIENTY
CHECKED BY: STEVEN NGUYEN
REVISED BY
DATE REVISED

LAST REVISION 06-08-10
DATE PLOTTED => 13-AUG-2012
TIME PLOTTED => 14:02

Dist	COUNTY	ROUTE	POST MILES TOTAL PROJECT	SHEET No.	TOTAL SHEETS
12	Ora	91	0.9/5.4	9	885

REGISTERED CIVIL ENGINEER 3/7/12 DATE

8-13-12
PLANS APPROVAL DATE

REGISTERED PROFESSIONAL ENGINEER JOSUE J. VAGLIENTY No. 70783 Exp. 6-30-13 CIVIL STATE OF CALIFORNIA

THE STATE OF CALIFORNIA OR ITS OFFICERS OR AGENTS SHALL NOT BE RESPONSIBLE FOR THE ACCURACY OR COMPLETENESS OF SCANNED COPIES OF THIS PLAN SHEET.

RBF CONSULTING
14725 ALTON PKWY
IRVINE, CA 92618

OCTA
550 S. MAIN STREET
ORANGE, CA 92863

NOTE:
1. ADJUST CLASS 2 AB DEPTH, AS REQUIRED FOR STRUCTURAL SECTION TYPE 3B ON "HB1" RAMP.

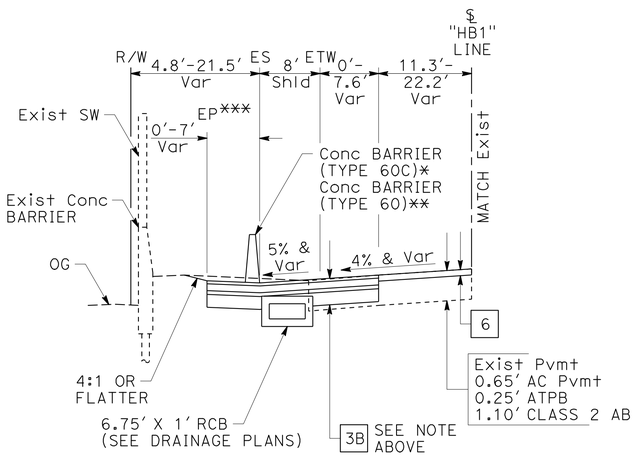

"HB1" RAMP

Sta 12+03.26 TO Sta 17+60
*Sta 15+70 TO Sta 16+50
**Sta 16+50 TO Sta 17+60
***Sta 12+03.26 TO Sta 14+38.26

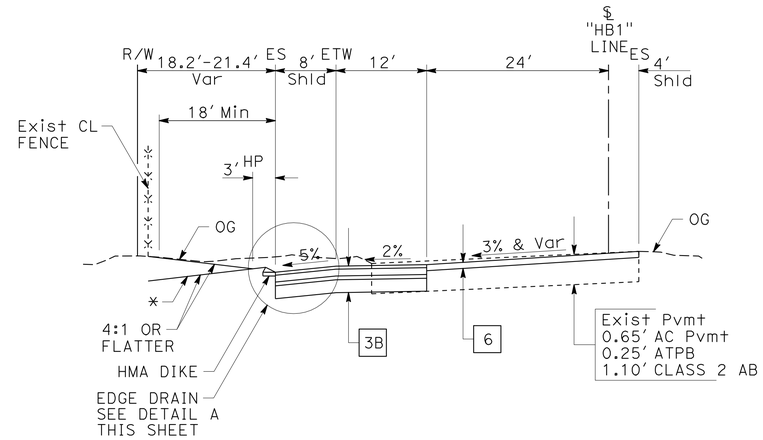

"HB1" RAMP

Sta 22+82 TO Sta 24+78.04
*Sta 23+44 TO Sta 24+78.04

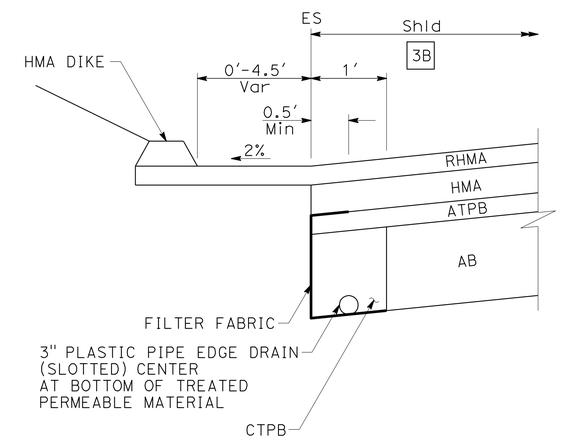

DETAIL A

FOR DETAILS NOT SHOWN, SEE Std PLAN No. D99A.

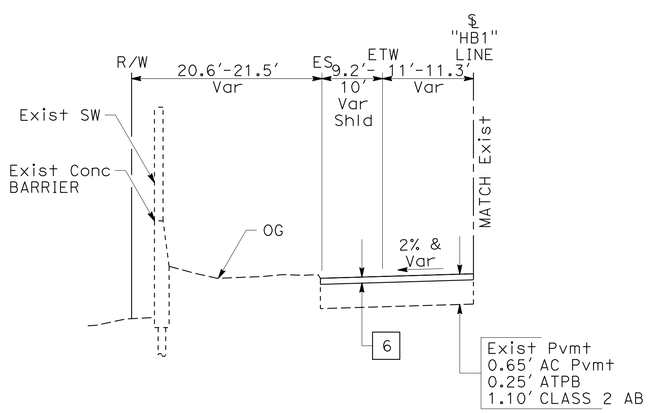

"HB1" RAMP

Sta 11+50 TO Sta 12+03.26

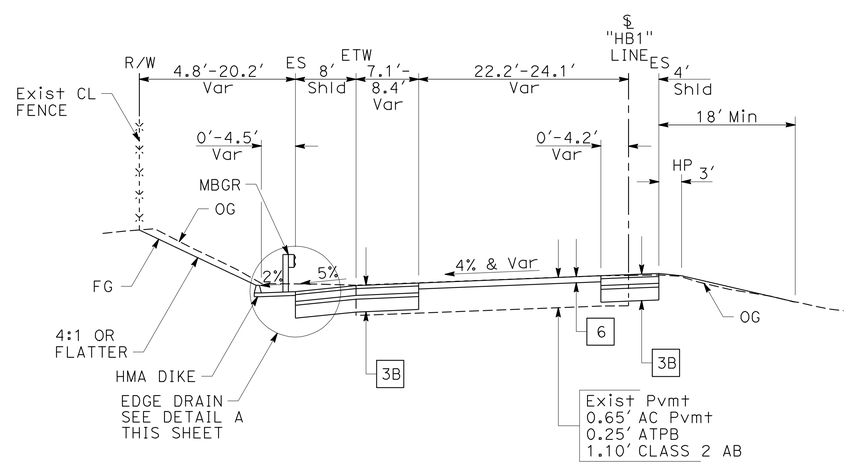

"HB1" RAMP

Sta 17+60 TO Sta 22+82

TYPICAL CROSS SECTIONS

NO SCALE

X-8

STATE OF CALIFORNIA - DEPARTMENT OF TRANSPORTATION
Caltrans
CONSULTANT FUNCTIONAL SUPERVISOR: MIKE CHESNEY
CALCULATED-DESIGNED BY: STEVEN NGUYEN
CHECKED BY: JOSUE VAGLIENTY
REVISED BY
DATE REVISED

LAST REVISION 06-08-10
DATE PLOTTED => 13-AUG-2012
TIME PLOTTED => 14:02

NOTE:
1. FOR ADDITIONAL INFORMATION,
SEE SAFETY PROJECT PLANS 12-0K5304.

Dist	COUNTY	ROUTE	POST MILES TOTAL PROJECT	SHEET No.	TOTAL SHEETS
12	Ora	91	0.9/5.4	10	885

REGISTERED CIVIL ENGINEER 3/7/12 DATE

8-13-12
PLANS APPROVAL DATE

REGISTERED PROFESSIONAL ENGINEER JOSUE J. VAGLIENTY No. 70783 Exp. 6-30-13 CIVIL STATE OF CALIFORNIA

THE STATE OF CALIFORNIA OR ITS OFFICERS OR AGENTS SHALL NOT BE RESPONSIBLE FOR THE ACCURACY OR COMPLETENESS OF SCANNED COPIES OF THIS PLAN SHEET.

RBF CONSULTING
14725 ALTON PKWY
IRVINE, CA 92618

OCTA
550 S. MAIN STREET
ORANGE, CA 92863

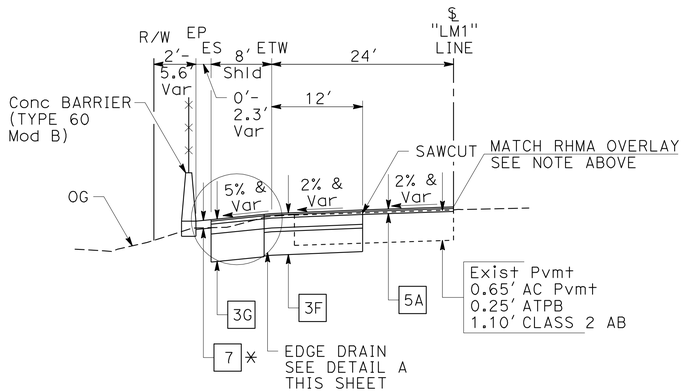

"LM1" RAMP

Sta 46+03.33 TO Sta 48+81.65
* Sta 48+50 TO Sta 48+81.65

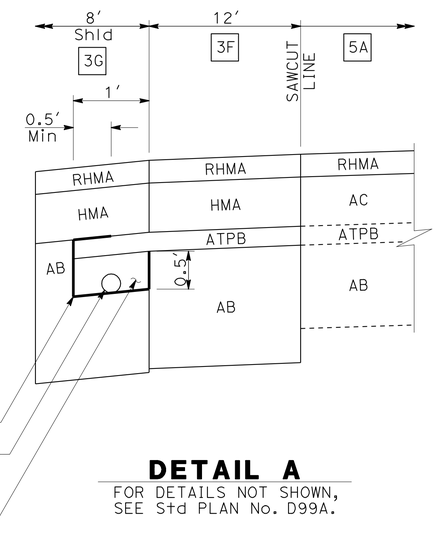

DETAIL A

FOR DETAILS NOT SHOWN,
SEE Std PLAN No. D99A.

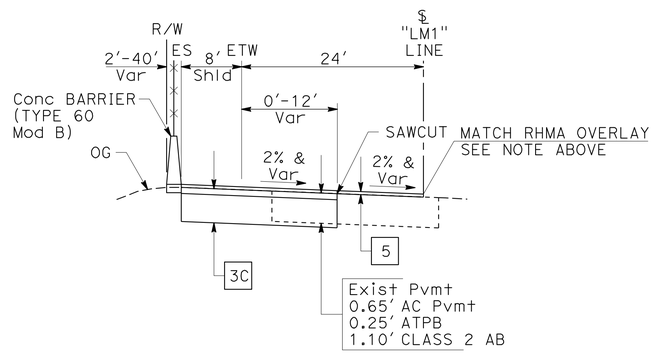

"LM1" RAMP

Sta 44+00 TO Sta 46+03.33

TYPICAL CROSS SECTIONS

NO SCALE

X-9

STATE OF CALIFORNIA - DEPARTMENT OF TRANSPORTATION
Caltrans

CONSULTANT FUNCTIONAL SUPERVISOR: MIKE CHESNEY
CALCULATED-DESIGNED BY: STEVEN NGUYEN
CHECKED BY: JOSUE VAGLIENTY
REVISED BY
DATE REVISED

LAST REVISION 06-08-10
DATE PLOTTED => 13-AUG-2012
TIME PLOTTED => 14:02

Dist	COUNTY	ROUTE	POST MILES TOTAL PROJECT	SHEET No.	TOTAL SHEETS
12	Ora	91	0.9/5.4	11	885

REGISTERED CIVIL ENGINEER 3/7/12 DATE

8-13-12
PLANS APPROVAL DATE

REGISTERED PROFESSIONAL ENGINEER JOSUE J. VAGLIENTY No. 70783 Exp. 6-30-13 CIVIL STATE OF CALIFORNIA

THE STATE OF CALIFORNIA OR ITS OFFICERS OR AGENTS SHALL NOT BE RESPONSIBLE FOR THE ACCURACY OR COMPLETENESS OF SCANNED COPIES OF THIS PLAN SHEET.

RBF CONSULTING
14725 ALTON PKWY
IRVINE, CA 92618

OCTA
550 S. MAIN STREET
ORANGE, CA 92863

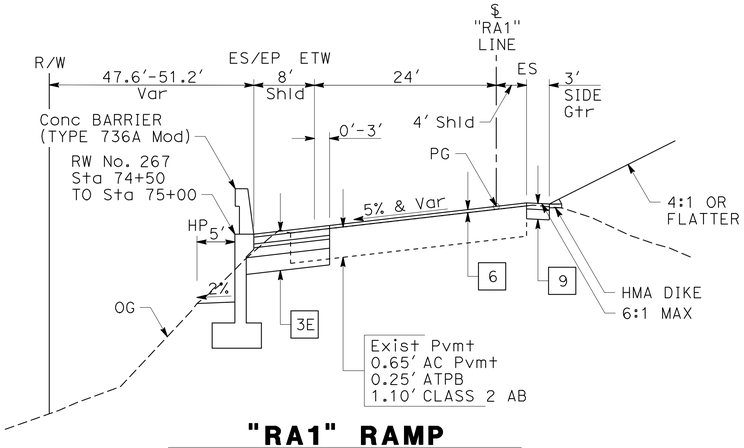

"RA1" RAMP
Sta 74+50 TO Sta 75+74.86

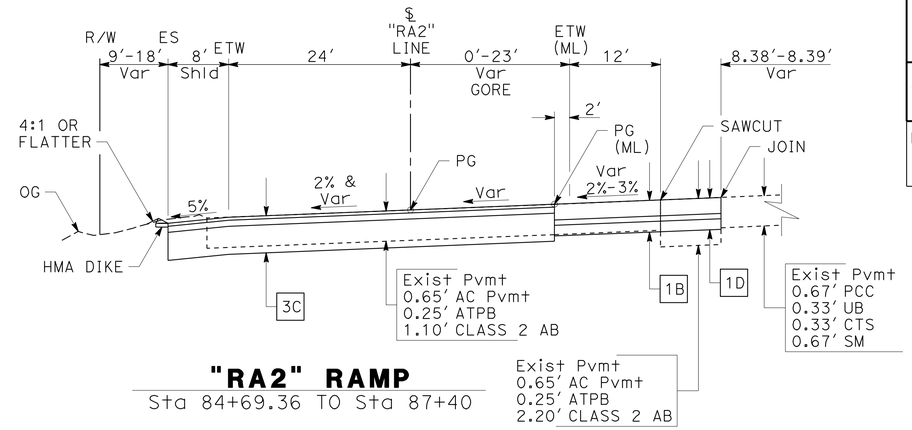

"RA2" RAMP
Sta 84+69.36 TO Sta 87+40

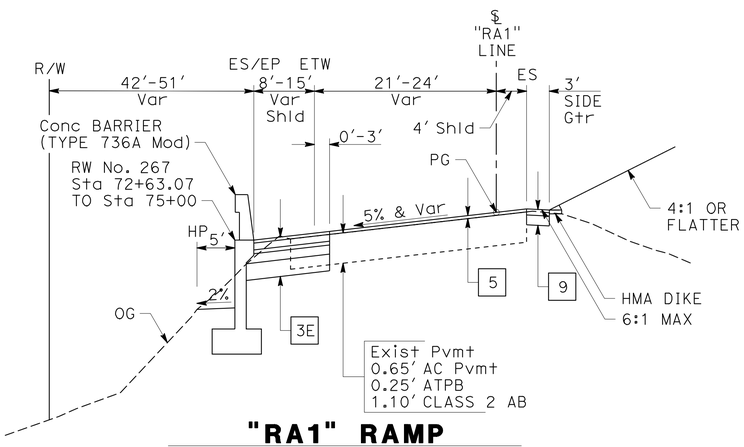

"RA1" RAMP
Sta 72+63.07 TO Sta 74+50

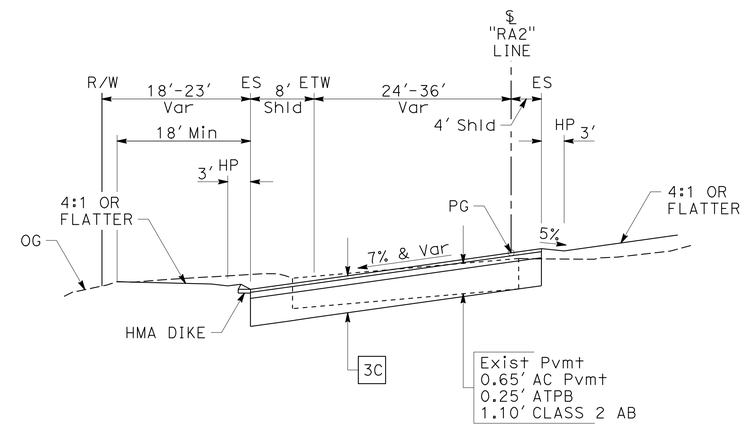

"RA2" RAMP
Sta 81+25 TO Sta 84+69.36

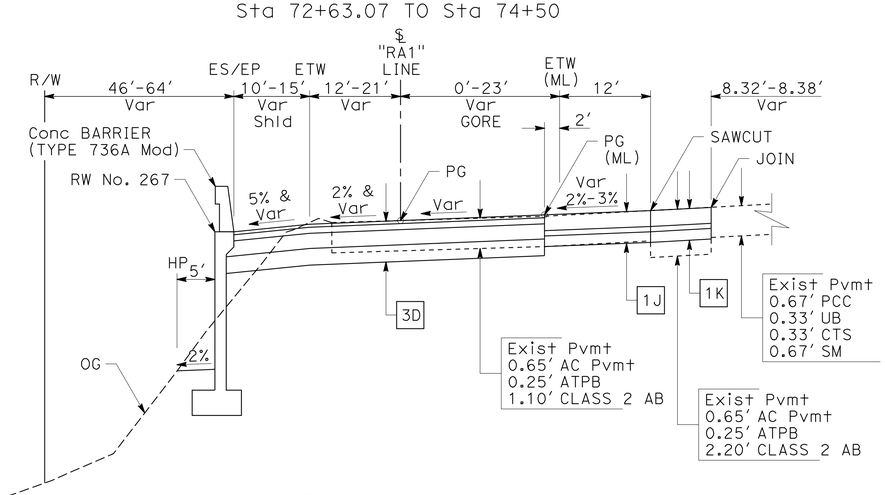

"RA1" RAMP
Sta 67+00 TO Sta 72+63.07

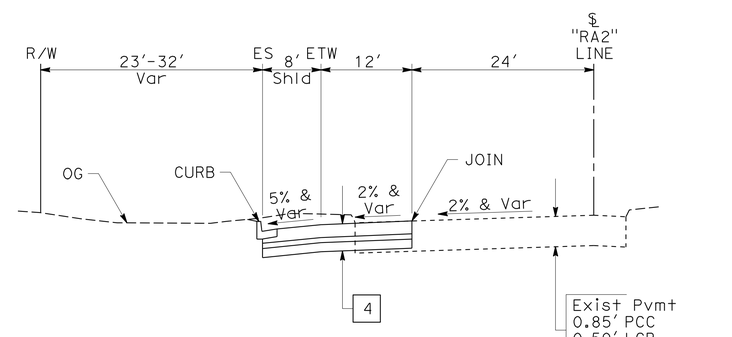

"RA2" RAMP
Sta 79+20.61 TO Sta 81+25

TYPICAL CROSS SECTIONS

NO SCALE

X-10

STATE OF CALIFORNIA - DEPARTMENT OF TRANSPORTATION
Caltrans

CONSULTANT FUNCTIONAL SUPERVISOR: MIKE CHESNEY
CALCULATED-DESIGNED BY: STEVEN NGUYEN
CHECKED BY: JOSUE VAGLIENTY
REVISED BY
DATE REVISED

LAST REVISION 06-08-10
DATE PLOTTED => 17-AUG-2012
TIME PLOTTED => 13:41

Dist	COUNTY	ROUTE	POST MILES TOTAL PROJECT	SHEET No.	TOTAL SHEETS
12	Ora	91	0.9/5.4	12	885

REGISTERED CIVIL ENGINEER 3/7/12 DATE

8-13-12
PLANS APPROVAL DATE

REGISTERED PROFESSIONAL ENGINEER JOSUE J. VAGLIENTY No. 70783 Exp. 6-30-13 CIVIL STATE OF CALIFORNIA

THE STATE OF CALIFORNIA OR ITS OFFICERS OR AGENTS SHALL NOT BE RESPONSIBLE FOR THE ACCURACY OR COMPLETENESS OF SCANNED COPIES OF THIS PLAN SHEET.

RBF CONSULTING
14725 ALTON PKWY
IRVINE, CA 92618

OCTA
550 S. MAIN STREET
ORANGE, CA 92863

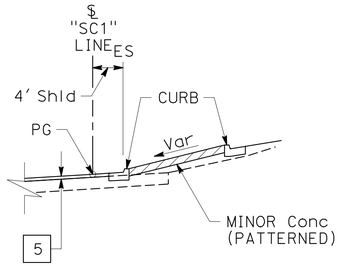

EDGE CONDITION
"SC1" Sta 25+01.38 TO "SC1" Sta 26+01.21

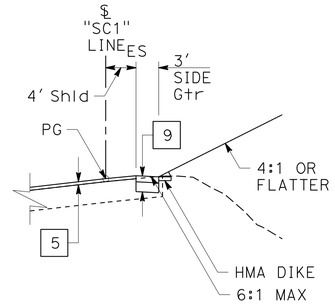

EDGE CONDITION
"SC1" Sta 26+92.80 TO "SC1" Sta 29+00

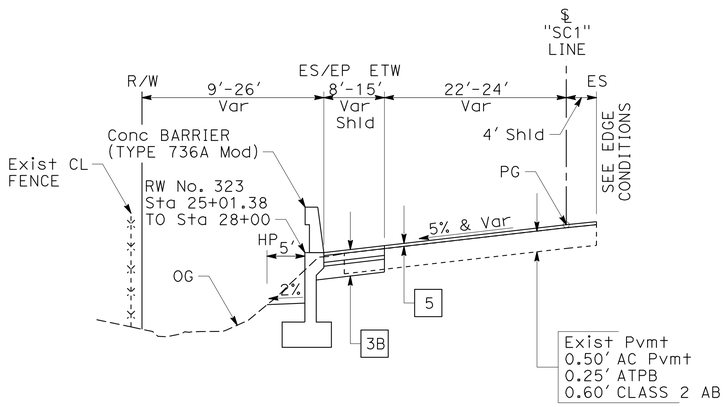

"SC1" RAMP
Sta 25+01.38 TO Sta 29+43.87

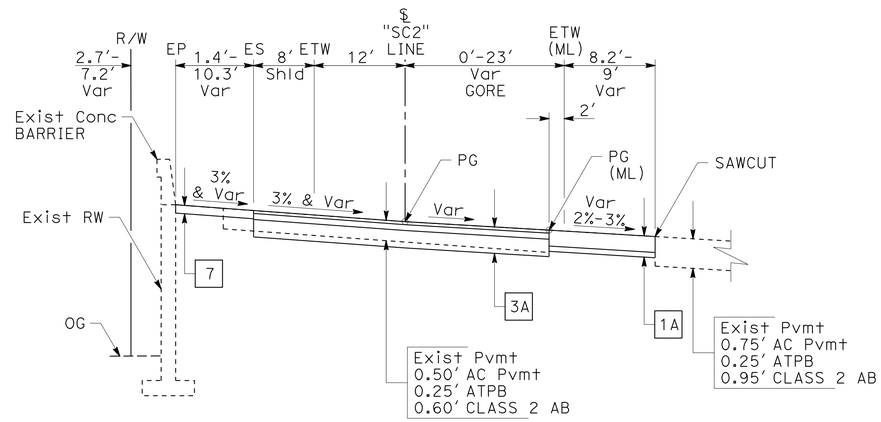

"SC2" RAMP
Sta 37+38.51 TO Sta 40+10

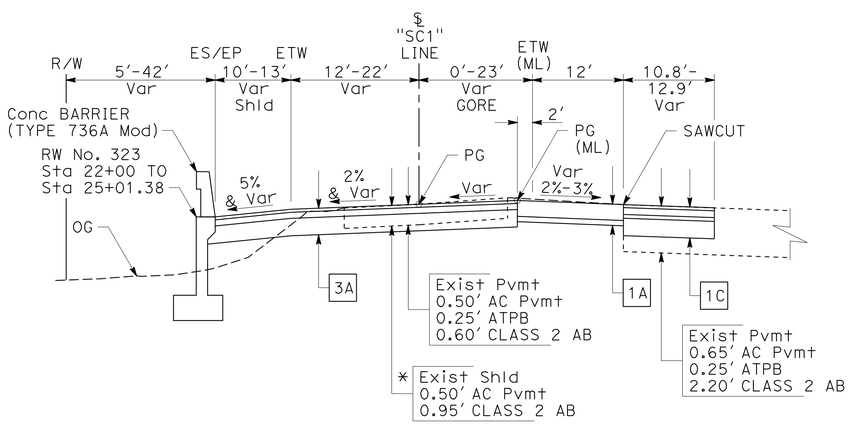

"SC1" RAMP
Sta 20+00 TO Sta 25+01.38
* Sta 20+00 TO Sta 23+10

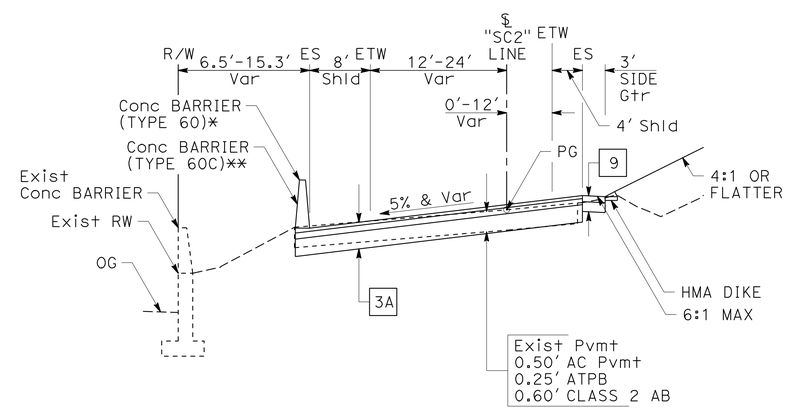

"SC2" RAMP
Sta 34+12.40 TO Sta 37+38.51
* Sta 34+12.40 TO Sta 36+00
** Sta 36+00 TO Sta 37+38.51

TYPICAL CROSS SECTIONS
NO SCALE

X-11

STATE OF CALIFORNIA - DEPARTMENT OF TRANSPORTATION
Caltrans
CONSULTANT FUNCTIONAL SUPERVISOR: MIKE CHESNEY
CALCULATED-DESIGNED BY: STEVEN NGUYEN
CHECKED BY: JOSUE VAGLIENTY
REVISED BY
DATE REVISED

LAST REVISION 06-08-10
DATE PLOTTED => 13-AUG-2012
TIME PLOTTED => 14:02

Dist	COUNTY	ROUTE	POST MILES TOTAL PROJECT	SHEET No.	TOTAL SHEETS
12	Ora	91	0.9/5.4	13	885

REGISTERED CIVIL ENGINEER 3/7/12 DATE

8-13-12
PLANS APPROVAL DATE

REGISTERED PROFESSIONAL ENGINEER JOSUE J. VAGLIENTY No. 70783 Exp. 6-30-13 CIVIL STATE OF CALIFORNIA

THE STATE OF CALIFORNIA OR ITS OFFICERS OR AGENTS SHALL NOT BE RESPONSIBLE FOR THE ACCURACY OR COMPLETENESS OF SCANNED COPIES OF THIS PLAN SHEET.

RBF CONSULTING
14725 ALTON PKWY
IRVINE, CA 92618

OCTA
550 S. MAIN STREET
ORANGE, CA 92863

LINE INDEX

LINE NAME	LINE DESCRIPTION	LINE NAME	LINE DESCRIPTION
"A" LINE	ROUTE 91	"LM1" LINE	WB OFF-RAMP TO LEMON St
"BH1" LINE	WB ON-RAMP FROM BROOKHURST St	"ML" LINE	OCTA/METROLINK (NORTH ANAHEIM OH)
"BH" LINE	BROOKHURST St/BROOKHURST Rd	"RA1" LINE	WB ON-RAMP FROM RAYMOND Ave
"BH2" LINE	WB OFF-RAMP TO BROOKHURST St	"RA" LINE	RAYMOND Ave/EAST St
"EU1" LINE	WB ON-RAMP FROM EUCLID St	"RA2" LINE	WB OFF-RAMP TO RAYMOND Ave
"EU" LINE	EUCLID St	"AC" LINE	ACACIA St
"EU2" LINE	WB OFF-RAMP TO EUCLID St	"SC1" LINE	WB ON-RAMP FROM STATE COLLEGE Blvd
"HB" LINE	HARBOR Blvd	"SC" LINE	STATE COLLEGE Blvd
"HB1" LINE	WB ON-RAMP FROM HARBOR Blvd	"SC2" LINE	WB OFF-RAMP TO STATE COLLEGE Blvd
"LM" LINE	LEMON St	"B" LINE	WB ROUTE 91

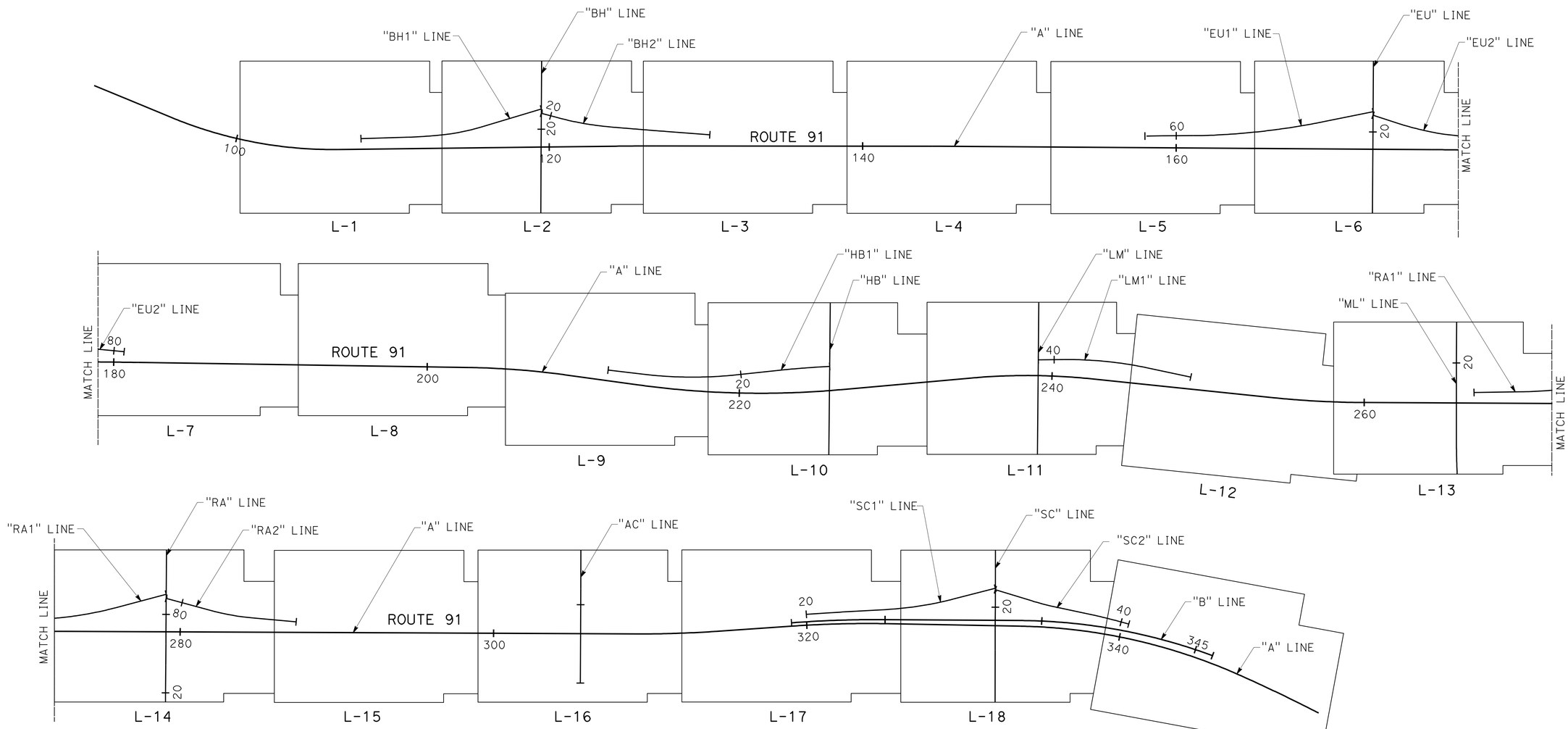

BEARINGS AND COORDINATES AS SHOWN HEREON ARE IN TERMS OF THE CALIFORNIA COORDINATE SYSTEM OF 1983 (CCS83, EPOCH 1991.35), ZONE 6; BASED LOCALLY UPON THE FOLLOWING CONTROL STATIONS PUBLISHED BY THE COUNTY OF ORANGE:
- 3511, N2,257,877.29 FT, E6,037,582.77 FT
- 5260, N2,257,149.07 FT, E6,063,970.03 FT

KEY MAP AND LINE INDEX

NO SCALE

K-1

STATE OF CALIFORNIA - DEPARTMENT OF TRANSPORTATION
Caltrans

CONSULTANT FUNCTIONAL SUPERVISOR: MIKE CHESNEY
CALCULATED-DESIGNED BY: JOSUE VAGLIENTY
CHECKED BY: REBECCA KELCHER
REVISED BY
DATE REVISED

LAST REVISION DATE PLOTTED => 13-AUG-2012
TIME PLOTTED => 14:02
06-08-10

Dist	COUNTY	ROUTE	POST MILES TOTAL PROJECT	SHEET No.	TOTAL SHEETS
12	Ora	91	0.9/5.4	14	885

REGISTERED CIVIL ENGINEER 3/7/12 DATE

8-13-12
PLANS APPROVAL DATE

REGISTERED PROFESSIONAL ENGINEER JOSUE J. VAGLIENTY No. 70783 Exp. 6-30-13 CIVIL STATE OF CALIFORNIA

THE STATE OF CALIFORNIA OR ITS OFFICERS OR AGENTS SHALL NOT BE RESPONSIBLE FOR THE ACCURACY OR COMPLETENESS OF SCANNED COPIES OF THIS PLAN SHEET.

RBF CONSULTING
14725 ALTON PKWY
IRVINE, CA 92618

OCTA
550 S. MAIN STREET
ORANGE, CA 92863

NOTES:

1. FOR ACCURATE RIGHT OF WAY DATA, CONTACT RIGHT OF WAY ENGINEERING AT THE DISTRICT OFFICE.
2. FOR REMOVAL OF EXISTING FACILITIES, SEE CONSTRUCTION DETAILS SHEETS.
3. FOR MAINTENANCE VEHICLE PULLOUT (MVP) DETAILS, SEE CONSTRUCTION DETAILS SHEETS.
4. FOR CONCRETE BARRIER, CURB AND DIKE TRANSITIONS, SEE CONSTRUCTION DETAILS SHEETS.
5. FOR IRRIGATION CROSSOVERS, SEE CONTOUR GRADING PLANS.
6. FOR PLACEMENT OF VEGETATION CONTROL AT MBGR AND TERMINAL SYSTEM END TREATMENT INSTALLATIONS, SEE STANDARD PLANS A77C5 AND A77C6.

LEGEND:

- MINOR CONCRETE (PATTERNED)
- [X] STRUCTURAL SECTION TYPE (SEE TYPICAL SECTIONS SHEET X-1)
- (X) CURVE DATA NUMBER
- C/F CUT/FILL
- F/C FILL/CUT
- C CUT
- F FILL

ABBREVIATIONS:

AP - ANGLE POINT
CHP - CALIFORNIA HIGHWAY PATROL

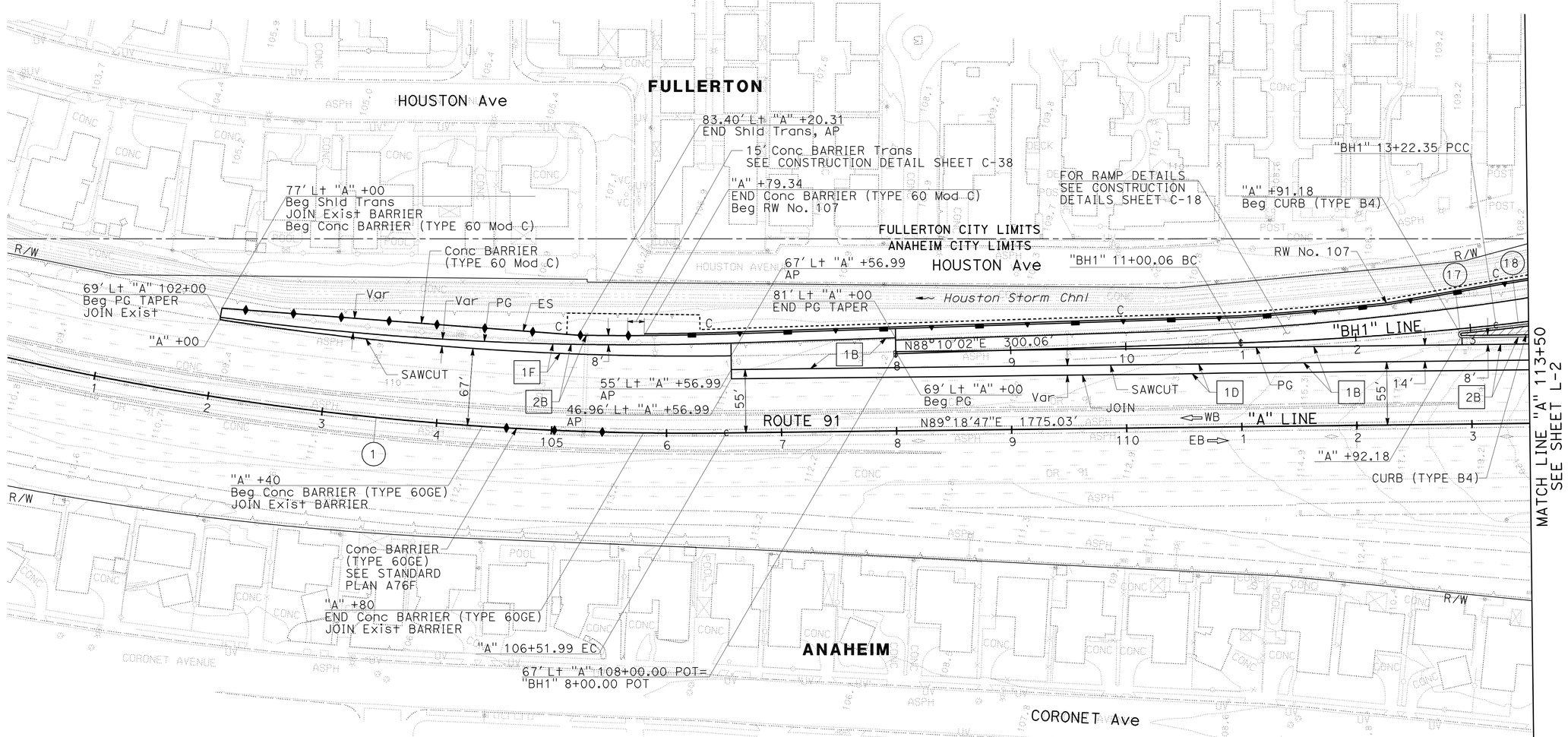

CURVE DATA

No. (X)	R	Δ	T	L
(1)	2700.00'	23°11'50"	554.16'	1093.14'
(17)	3000.00'	4°14'44"	111.20'	222.29'
(18)	1350.00'	10°35'29"	125.13'	249.56'

LAYOUT

SCALE: 1" = 50'

L-1

STATE OF CALIFORNIA - DEPARTMENT OF TRANSPORTATION
Caltrans

CONSULTANT FUNCTIONAL SUPERVISOR: MIKE CHESNEY
CALCULATED-DESIGNED BY: REBECCA KELCHER
CHECKED BY: JOSUE VAGLIENTY
REVISED BY
DATE REVISED

LAST REVISION: DATE PLOTTED => 13-AUG-2012
06-08-10 TIME PLOTTED => 14:02

Dist	COUNTY	ROUTE	POST MILES TOTAL PROJECT	SHEET No.	TOTAL SHEETS
12	Ora	91	0.9/5.4	15	885

REGISTERED CIVIL ENGINEER 3/7/12 DATE

8-13-12
PLANS APPROVAL DATE

REGISTERED PROFESSIONAL ENGINEER JOSUE J. VAGLIENTY No. 70783 Exp. 6-30-13 CIVIL STATE OF CALIFORNIA

THE STATE OF CALIFORNIA OR ITS OFFICERS OR AGENTS SHALL NOT BE RESPONSIBLE FOR THE ACCURACY OR COMPLETENESS OF SCANNED COPIES OF THIS PLAN SHEET.

RBF CONSULTING
14725 ALTON PKWY
IRVINE, CA 92618

OCTA
550 S. MAIN STREET
ORANGE, CA 92863

NOTES:

1. FOR ACCURATE RIGHT OF WAY DATA, CONTACT RIGHT OF WAY ENGINEERING AT THE DISTRICT OFFICE.
2. FOR BROOKHURST St DETAILS, SEE CONSTRUCTION DETAILS SHEET C-28.

CURVE DATA

No. (X)	R	Δ	T	L
(2)	20000.00′	0°43′51"	127.56′	255.11′
(18)	1350.00′	10°35′29"	125.13′	249.56′
(19)	2000.00′	9°22′12"	163.90′	327.07′
(20)	7801.12′	1°23′11"	94.39′	188.77′

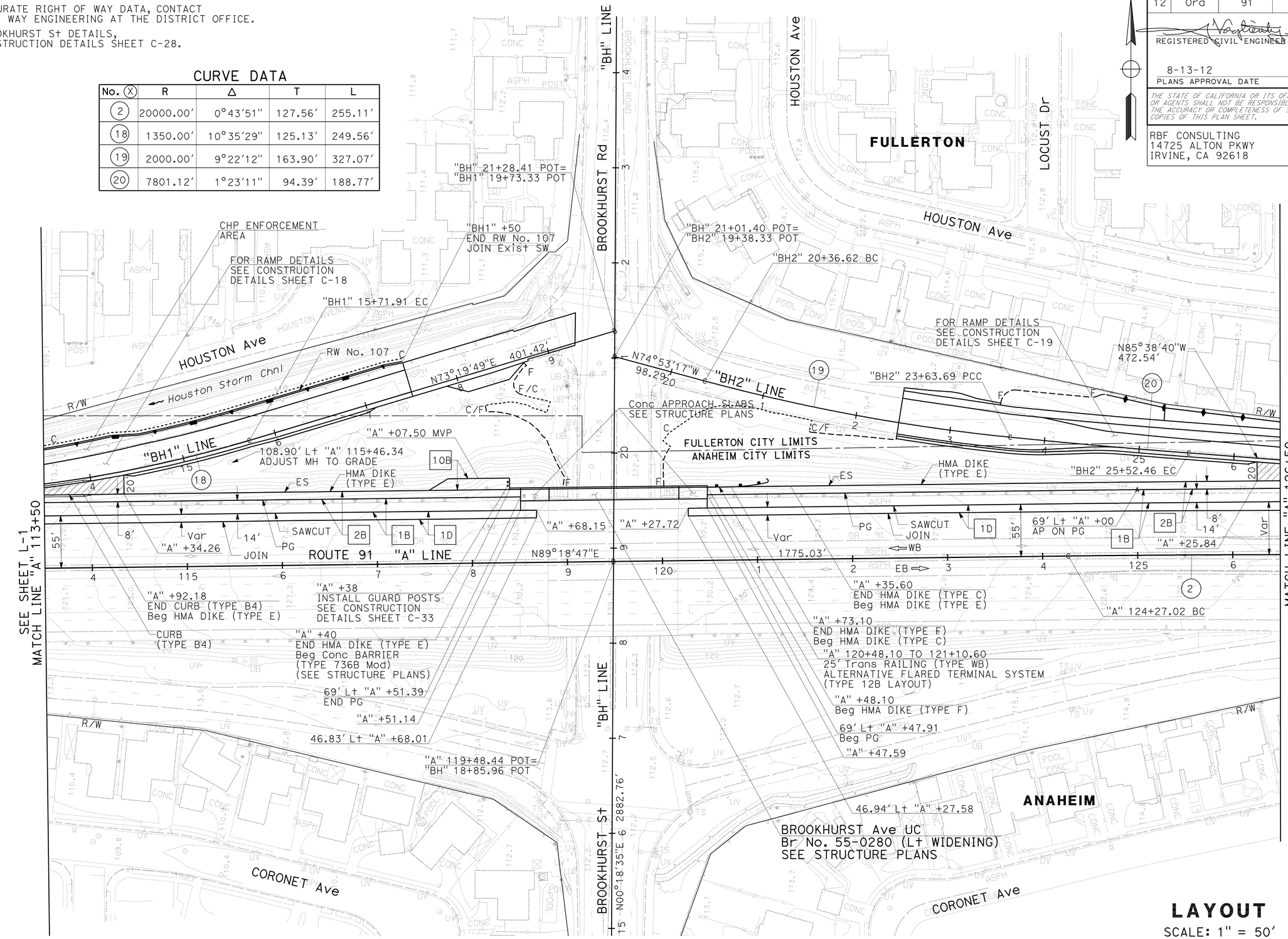

LAYOUT
SCALE: 1" = 50′

L-2

STATE OF CALIFORNIA - DEPARTMENT OF TRANSPORTATION
Caltrans

CONSULTANT FUNCTIONAL SUPERVISOR: MIKE CHESNEY
CALCULATED-DESIGNED BY: JOSUE VAGLIENTY
CHECKED BY: REBECCA KELCHER
REVISED BY
DATE REVISED

LAST REVISION 06-08-10
DATE PLOTTED => 13-AUG-2012
TIME PLOTTED => 14:03

NOTE:
1. FOR ACCURATE RIGHT OF WAY DATA, CONTACT RIGHT OF WAY ENGINEERING AT THE DISTRICT OFFICE.

Dist	COUNTY	ROUTE	POST MILES TOTAL PROJECT	SHEET No.	TOTAL SHEETS
12	Ora	91	0.9/5.4	16	885

REGISTERED CIVIL ENGINEER 3/7/12 DATE

8-13-12
PLANS APPROVAL DATE

REGISTERED PROFESSIONAL ENGINEER JOSUE J. VAGLIENTY No. 70783 Exp. 6-30-13 CIVIL STATE OF CALIFORNIA

THE STATE OF CALIFORNIA OR ITS OFFICERS OR AGENTS SHALL NOT BE RESPONSIBLE FOR THE ACCURACY OR COMPLETENESS OF SCANNED COPIES OF THIS PLAN SHEET.

RBF CONSULTING
14725 ALTON PKWY
IRVINE, CA 92618

OCTA
550 S. MAIN STREET
ORANGE, CA 92863

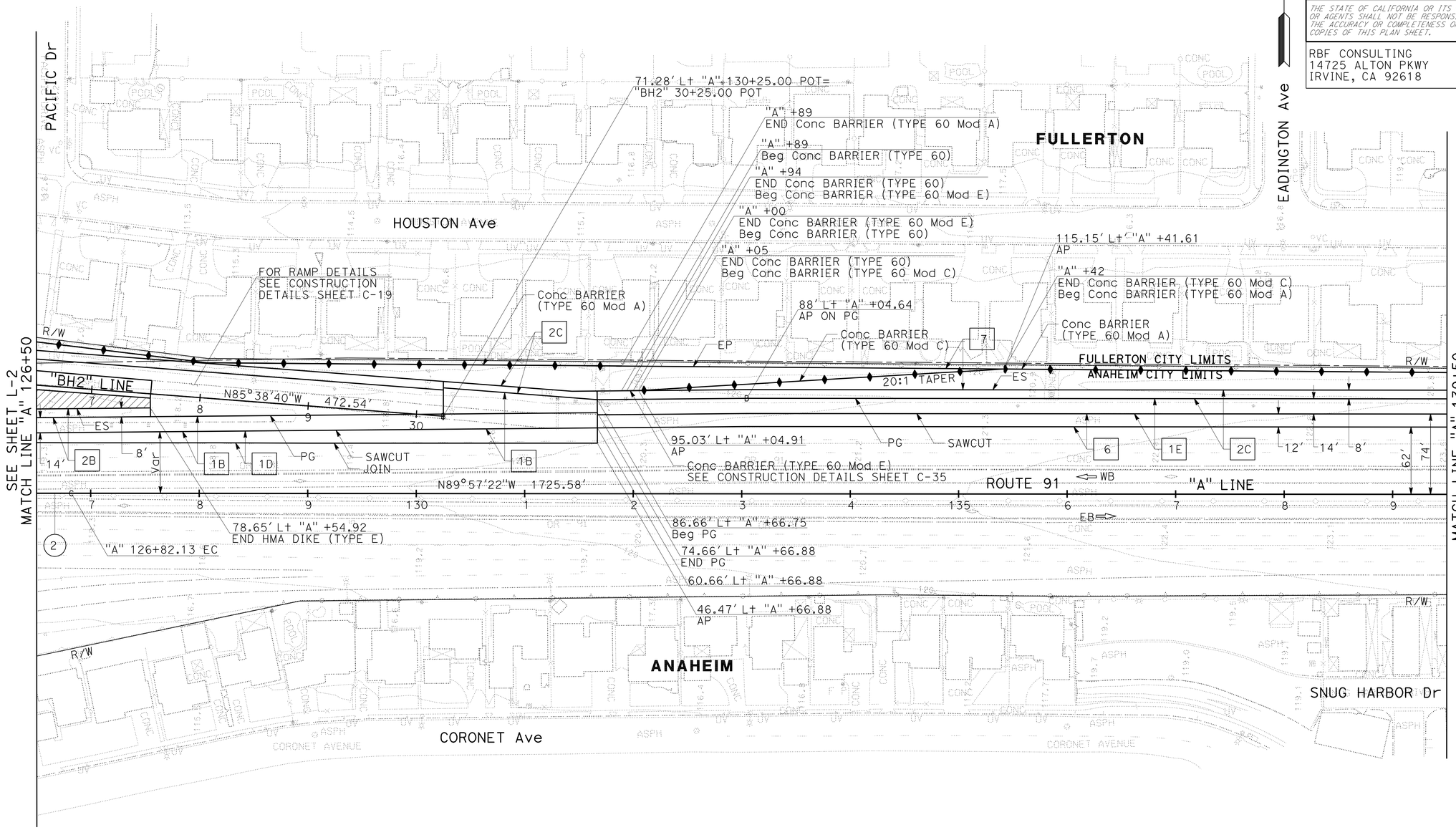

CURVE DATA

No. (X)	R	Δ	T	L
(2)	20000.00'	0°43'51"	127.56'	255.11'

LAYOUT
SCALE: 1" = 50'

L-3

STATE OF CALIFORNIA - DEPARTMENT OF TRANSPORTATION
Caltrans
CONSULTANT FUNCTIONAL SUPERVISOR: MIKE CHESNEY
REBECCA KELCHER / JOSUE VAGLIENTY
REVISED BY / DATE REVISED
CALCULATED-DESIGNED BY / CHECKED BY

LAST REVISION 06-08-10 | DATE PLOTTED => 13-AUG-2012 | TIME PLOTTED => 14:03

NOTE:
1. FOR ACCURATE RIGHT OF WAY DATA, CONTACT RIGHT OF WAY ENGINEERING AT THE DISTRICT OFFICE.

Dist	COUNTY	ROUTE	POST MILES TOTAL PROJECT	SHEET No.	TOTAL SHEETS
12	Ora	91	0.9/5.4	17	885

REGISTERED CIVIL ENGINEER 3/7/12 DATE

8-13-12
PLANS APPROVAL DATE

REGISTERED PROFESSIONAL ENGINEER JOSUE J. VAGLIENTY No. 70783 Exp. 6-30-13 CIVIL STATE OF CALIFORNIA

THE STATE OF CALIFORNIA OR ITS OFFICERS OR AGENTS SHALL NOT BE RESPONSIBLE FOR THE ACCURACY OR COMPLETENESS OF SCANNED COPIES OF THIS PLAN SHEET.

RBF CONSULTING
14725 ALTON PKWY
IRVINE, CA 92618

OCTA
550 S. MAIN STREET
ORANGE, CA 92863

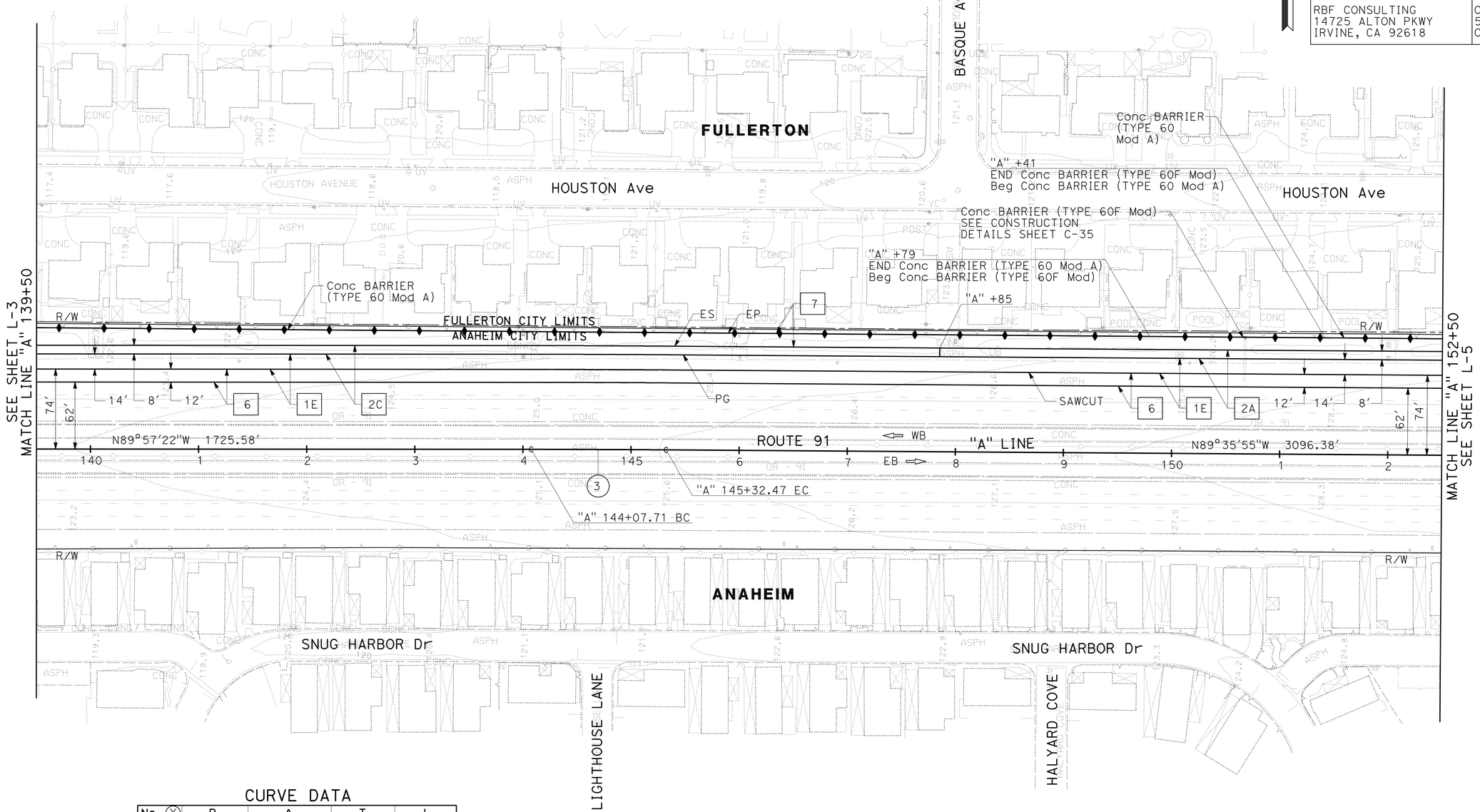

CURVE DATA

No. (X)	R	Δ	T	L
3	20000.00′	0°21′27"	62.38′	124.76′

LAYOUT

SCALE: 1" = 50′

L-4

STATE OF CALIFORNIA - DEPARTMENT OF TRANSPORTATION
Caltrans

CONSULTANT FUNCTIONAL SUPERVISOR: MIKE CHESNEY
CALCULATED-DESIGNED BY: REBECCA KELCHER
CHECKED BY: JOSUE VAGLIENTY
REVISED BY
DATE REVISED

LAST REVISION 06-08-10
DATE PLOTTED => 13-AUG-2012
TIME PLOTTED => 14:03

NOTE:
1. FOR ACCURATE RIGHT OF WAY DATA, CONTACT RIGHT OF WAY ENGINEERING AT THE DISTRICT OFFICE.

Dist	COUNTY	ROUTE	POST MILES TOTAL PROJECT	SHEET No.	TOTAL SHEETS
12	Ora	91	0.9/5.4	18	885

REGISTERED CIVIL ENGINEER 7/24/12 DATE

8-13-12
PLANS APPROVAL DATE

REGISTERED PROFESSIONAL ENGINEER JOSUE J. VAGLIENTY No. 70783 Exp. 6-30-13 CIVIL STATE OF CALIFORNIA

THE STATE OF CALIFORNIA OR ITS OFFICERS OR AGENTS SHALL NOT BE RESPONSIBLE FOR THE ACCURACY OR COMPLETENESS OF SCANNED COPIES OF THIS PLAN SHEET.

RBF CONSULTING
14725 ALTON PKWY
IRVINE, CA 92618

OCTA
550 S. MAIN STREET
ORANGE, CA 92863

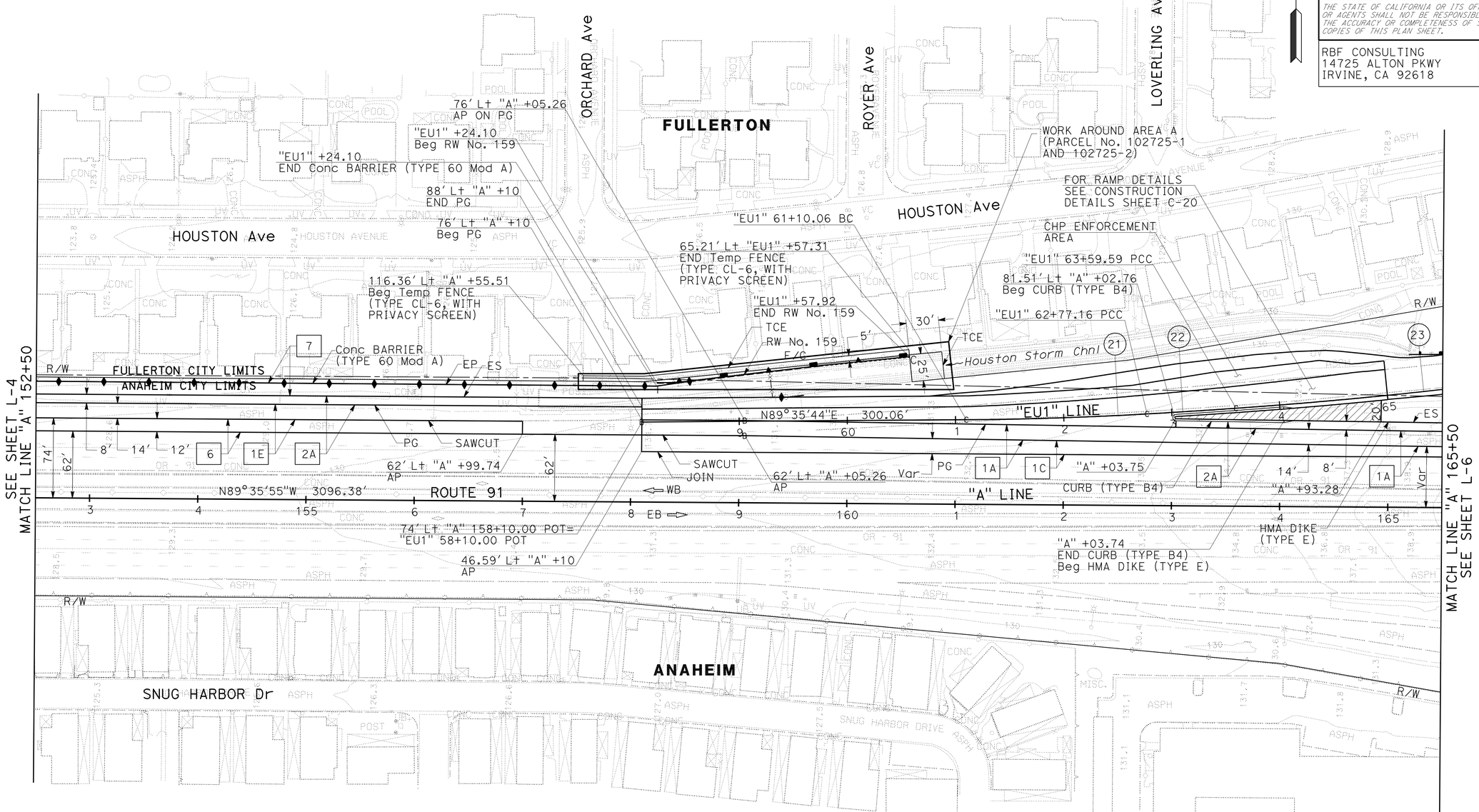

CURVE DATA

No. (X)	R	Δ	T	L
21	3323.80'	2°52'50"	83.57'	167.10'
22	6624.62'	0°42'47"	41.22'	82.43'
23	4550.00'	7°23'52"	294.14'	587.47'

LAYOUT
SCALE: 1" = 50'

L-5

REVISED BY | DATE REVISED
REBECCA KELCHER | JOSUE VAGLIENTY
CALCULATED-DESIGNED BY | CHECKED BY
CONSULTANT FUNCTIONAL SUPERVISOR | MIKE CHESNEY
STATE OF CALIFORNIA - DEPARTMENT OF TRANSPORTATION
Caltrans

LAST REVISION 06-08-10
DATE PLOTTED => 13-AUG-2012
TIME PLOTTED => 14:03

Dist	COUNTY	ROUTE	POST MILES TOTAL PROJECT	SHEET No.	TOTAL SHEETS
12	Ora	91	0.9/5.4	19	885

REGISTERED CIVIL ENGINEER 3/7/12 DATE

8-13-12
PLANS APPROVAL DATE

REGISTERED PROFESSIONAL ENGINEER JOSUE J. VAGLIENTY No. 70783 Exp. 6-30-13 CIVIL STATE OF CALIFORNIA

THE STATE OF CALIFORNIA OR ITS OFFICERS OR AGENTS SHALL NOT BE RESPONSIBLE FOR THE ACCURACY OR COMPLETENESS OF SCANNED COPIES OF THIS PLAN SHEET.

RBF CONSULTING
14725 ALTON PKWY
IRVINE, CA 92618

OCTA
550 S. MAIN STREET
ORANGE, CA 92863

NOTES:
1. FOR ACCURATE RIGHT OF WAY DATA, CONTACT RIGHT OF WAY ENGINEERING AT THE DISTRICT OFFICE.
2. FOR EUCLID St DETAILS, SEE CONSTRUCTION DETAILS SHEET C-28.

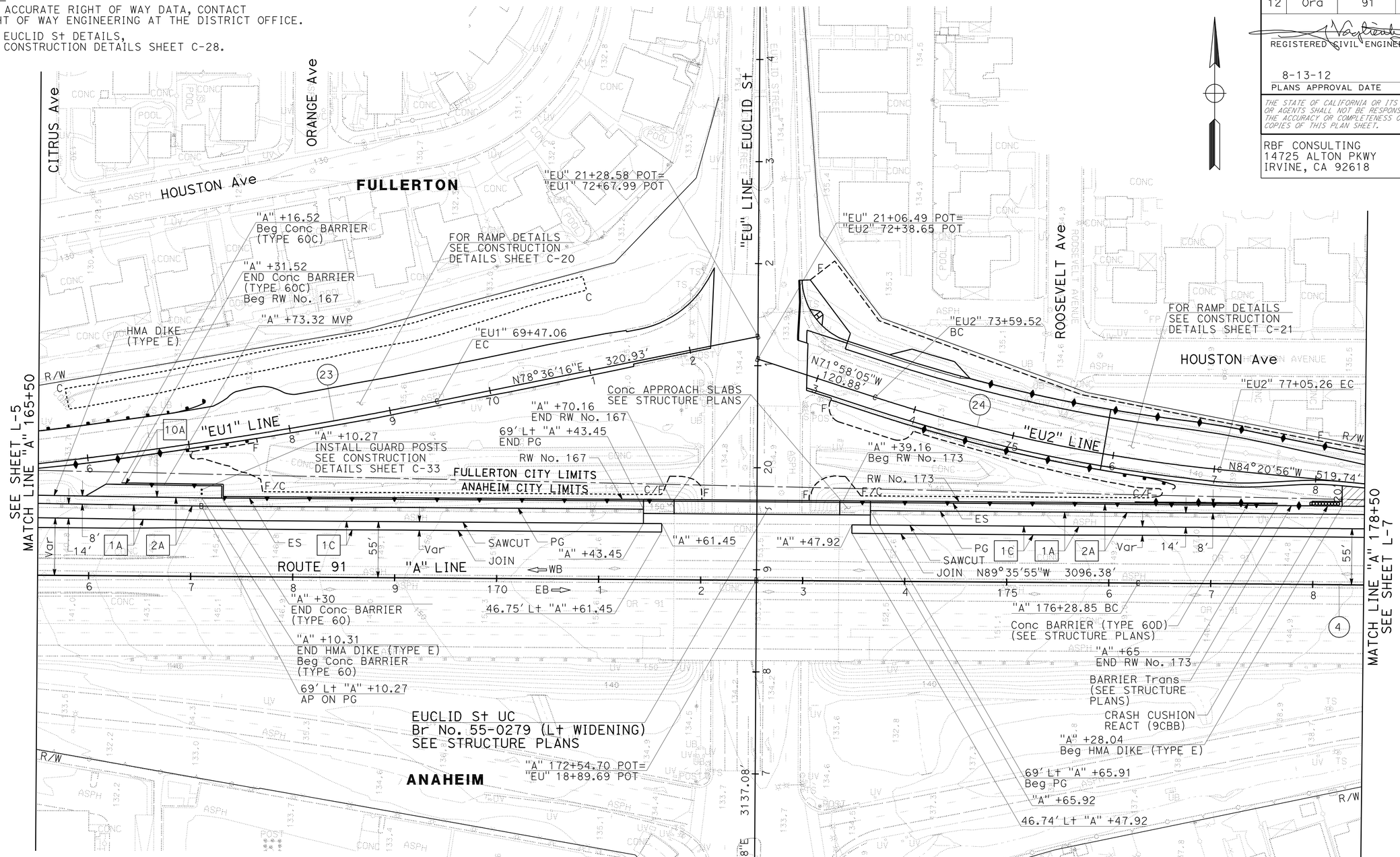

CURVE DATA

No. (X)	R	Δ	T	L
(4)	62000.00'	0°28'32"	257.30'	514.60'
(23)	4550.00'	7°23'52"	294.14'	587.47'
(24)	1600.00'	12°22'51"	173.55'	345.74'

LAYOUT

SCALE: 1" = 50'

L-6

STATE OF CALIFORNIA - DEPARTMENT OF TRANSPORTATION
Caltrans

CONSULTANT FUNCTIONAL SUPERVISOR: MIKE CHESNEY
CALCULATED-DESIGNED BY: JOSUE VAGLIENTY
CHECKED BY: REBECCA KELCHER
REVISED BY / DATE REVISED

LAST REVISION: DATE PLOTTED => 13-AUG-2012
06-08-10 TIME PLOTTED => 14:03

BORDER LAST REVISED 7/2/2010 | USERNAME => s109858 | DGN FILE => 1200000079ea006.dgn | RELATIVE BORDER SCALE IS IN INCHES 0 1 2 3 | UNIT 2295 | PROJECT NUMBER & PHASE 12000000791

NOTE:
1. FOR ACCURATE RIGHT OF WAY DATA, CONTACT RIGHT OF WAY ENGINEERING AT THE DISTRICT OFFICE.

Dist	COUNTY	ROUTE	POST MILES TOTAL PROJECT	SHEET No.	TOTAL SHEETS
12	Ora	91	0.9/5.4	20	885

REGISTERED CIVIL ENGINEER 3/7/12 DATE

8-13-12
PLANS APPROVAL DATE

REGISTERED PROFESSIONAL ENGINEER JOSUE J. VAGLIENTY No. 70783 Exp. 6-30-13 CIVIL STATE OF CALIFORNIA

THE STATE OF CALIFORNIA OR ITS OFFICERS OR AGENTS SHALL NOT BE RESPONSIBLE FOR THE ACCURACY OR COMPLETENESS OF SCANNED COPIES OF THIS PLAN SHEET.

RBF CONSULTING
14725 ALTON PKWY
IRVINE, CA 92618

OCTA
550 S. MAIN STREET
ORANGE, CA 92863

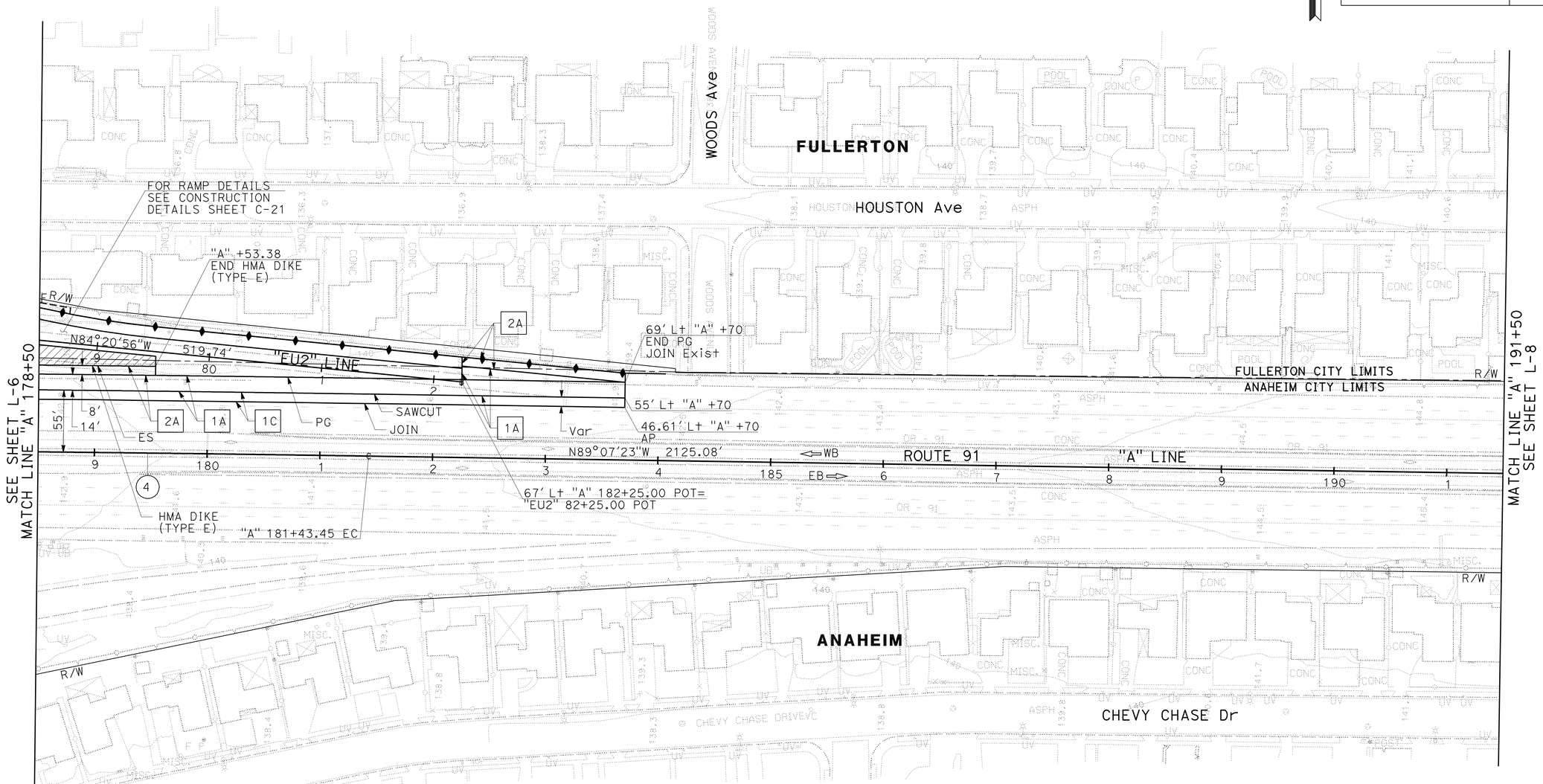

CURVE DATA

No. (X)	R	Δ	T	L
(4)	62000.00'	0°28'32"	257.30'	514.60'

LAYOUT
SCALE: 1" = 50'

L-7

STATE OF CALIFORNIA - DEPARTMENT OF TRANSPORTATION
Caltrans
CONSULTANT FUNCTIONAL SUPERVISOR: MIKE CHESNEY
CALCULATED-DESIGNED BY: REBECCA KELCHER
CHECKED BY: JOSUE VAGLIENTY
REVISED BY
DATE REVISED

LAST REVISION 06-08-10
DATE PLOTTED => 13-AUG-2012
TIME PLOTTED => 14:03

NOTE:
1. FOR ACCURATE RIGHT OF WAY DATA, CONTACT RIGHT OF WAY ENGINEERING AT THE DISTRICT OFFICE.

Dist	COUNTY	ROUTE	POST MILES TOTAL PROJECT	SHEET No.	TOTAL SHEETS
12	Ora	91	0.9/5.4	21	885

REGISTERED CIVIL ENGINEER 3/7/12 DATE

8-13-12
PLANS APPROVAL DATE

REGISTERED PROFESSIONAL ENGINEER JOSUE J. VAGLIENTY No. 70783 Exp. 6-30-13 CIVIL STATE OF CALIFORNIA

THE STATE OF CALIFORNIA OR ITS OFFICERS OR AGENTS SHALL NOT BE RESPONSIBLE FOR THE ACCURACY OR COMPLETENESS OF SCANNED COPIES OF THIS PLAN SHEET.

RBF CONSULTING
14725 ALTON PKWY
IRVINE, CA 92618

OCTA
550 S. MAIN STREET
ORANGE, CA 92863

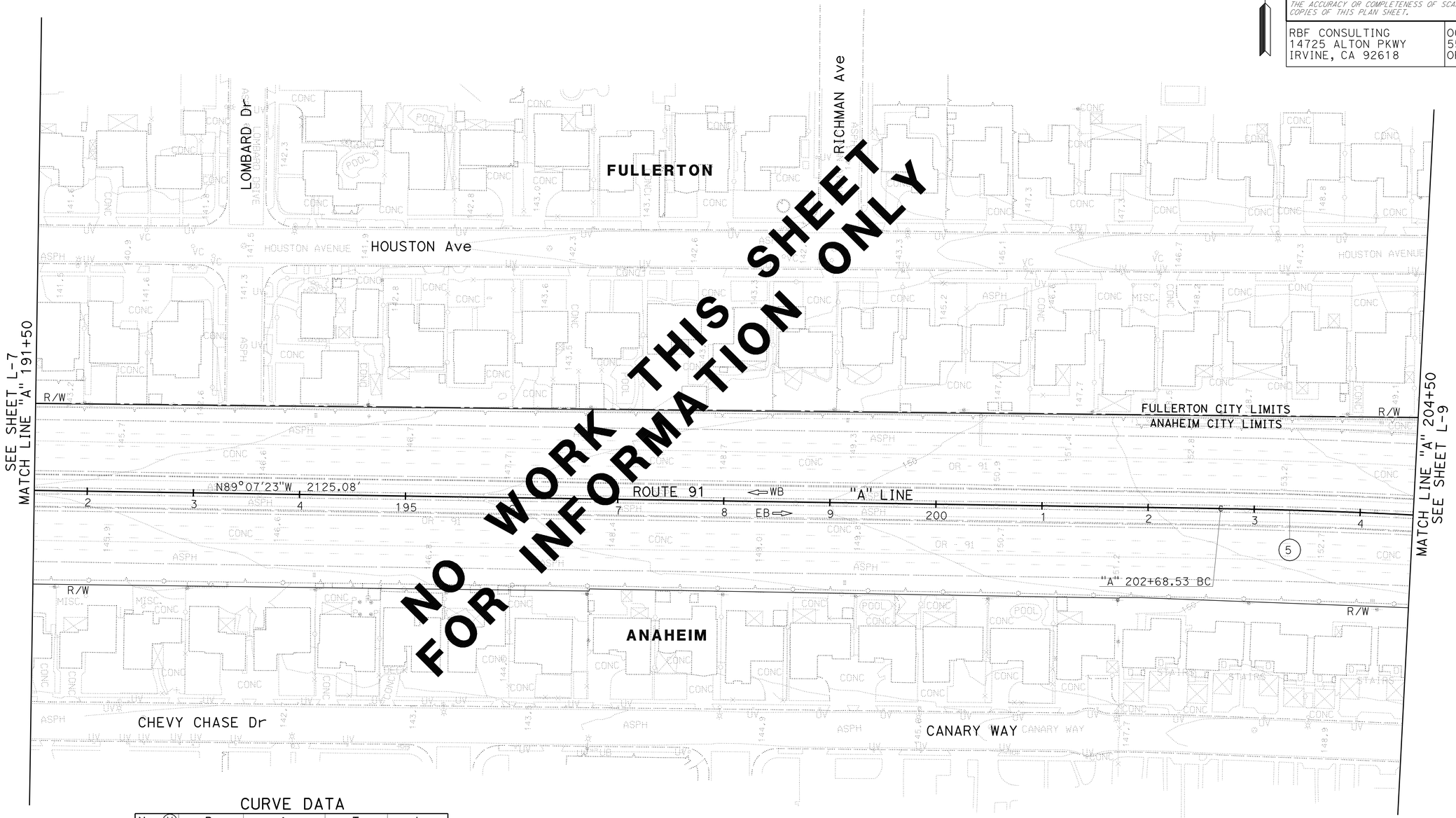

CURVE DATA

No. (X)	R	Δ	T	L
5	5060.00'	6°57'56"	307.95'	615.15'

LAYOUT
SCALE: 1" = 50'

L-8

STATE OF CALIFORNIA - DEPARTMENT OF TRANSPORTATION
Caltrans
CONSULTANT FUNCTIONAL SUPERVISOR: MIKE CHESNEY
CALCULATED-DESIGNED BY: REBECCA KELCHER
CHECKED BY: JOSUE VAGLIENTY
REVISED BY
DATE REVISED

LAST REVISION 06-08-10
DATE PLOTTED => 13-AUG-2012
TIME PLOTTED => 14:04

NOTE:
1. FOR ACCURATE RIGHT OF WAY DATA, CONTACT RIGHT OF WAY ENGINEERING AT THE DISTRICT OFFICE.

Dist	COUNTY	ROUTE	POST MILES TOTAL PROJECT	SHEET No.	TOTAL SHEETS
12	Ora	91	0.9/5.4	22	885

REGISTERED CIVIL ENGINEER 3/7/12 DATE

8-13-12
PLANS APPROVAL DATE

REGISTERED PROFESSIONAL ENGINEER JOSUE J. VAGLIENTY No. 70783 Exp. 6-30-13 CIVIL STATE OF CALIFORNIA

THE STATE OF CALIFORNIA OR ITS OFFICERS OR AGENTS SHALL NOT BE RESPONSIBLE FOR THE ACCURACY OR COMPLETENESS OF SCANNED COPIES OF THIS PLAN SHEET.

RBF CONSULTING
14725 ALTON PKWY
IRVINE, CA 92618

OCTA
550 S. MAIN STREET
ORANGE, CA 92863

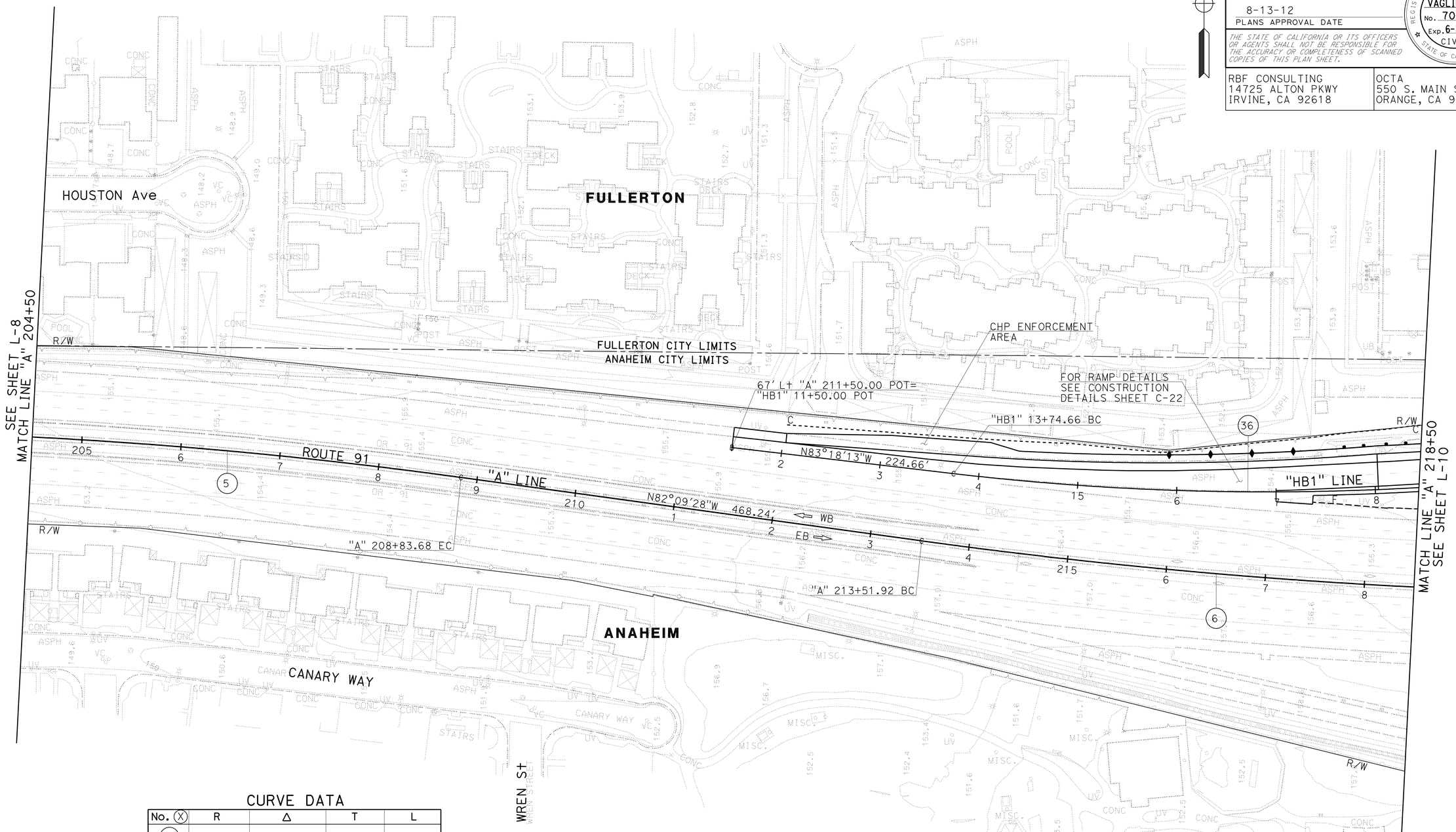

CURVE DATA

No. (X)	R	Δ	T	L
(5)	5060.00′	6°57′56"	307.95′	615.15′
(6)	5730.00′	12°56′33"	649.94′	1294.34′
(36)	2700.00′	12°46′07"	302.10′	601.70′

LAYOUT

SCALE: 1" = 50′

L-9

STATE OF CALIFORNIA - DEPARTMENT OF TRANSPORTATION
Caltrans

CONSULTANT FUNCTIONAL SUPERVISOR: MIKE CHESNEY
CALCULATED-DESIGNED BY: REBECCA KELCHER
CHECKED BY: JOSUE VAGLIENTY
REVISED BY
DATE REVISED

LAST REVISION 06-08-10
DATE PLOTTED => 13-AUG-2012
TIME PLOTTED => 14:04

NOTE:
1. FOR ACCURATE RIGHT OF WAY DATA, CONTACT RIGHT OF WAY ENGINEERING AT THE DISTRICT OFFICE.

Dist	COUNTY	ROUTE	POST MILES TOTAL PROJECT	SHEET No.	TOTAL SHEETS
12	Ora	91	0.9/5.4	23	885

REGISTERED CIVIL ENGINEER 3/7/12 DATE

8-13-12
PLANS APPROVAL DATE

REGISTERED PROFESSIONAL ENGINEER JOSUE J. VAGLIENTY No. 70783 Exp. 6-30-13 CIVIL STATE OF CALIFORNIA

THE STATE OF CALIFORNIA OR ITS OFFICERS OR AGENTS SHALL NOT BE RESPONSIBLE FOR THE ACCURACY OR COMPLETENESS OF SCANNED COPIES OF THIS PLAN SHEET.

RBF CONSULTING
14725 ALTON PKWY
IRVINE, CA 92618

OCTA
550 S. MAIN STREET
ORANGE, CA 92863

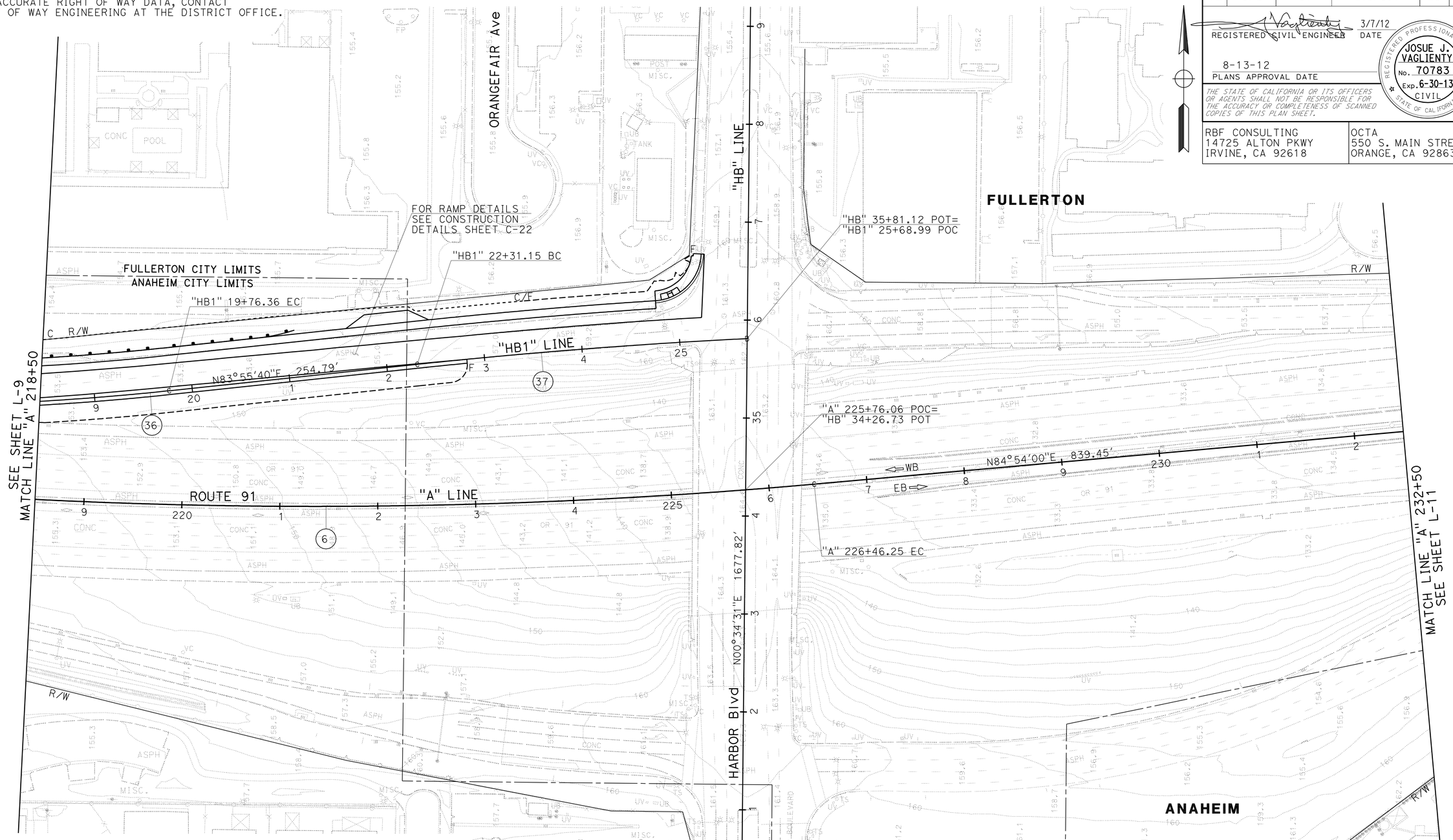

CURVE DATA

No. (X)	R	Δ	T	L
6	5730.00′	12°56′33″	649.94′	1294.34′
36	2700.00′	12°46′07″	302.10′	601.70′
37	6000.00′	3°13′34″	168.97′	337.84′

LAYOUT
SCALE: 1" = 50′

L-10

STATE OF CALIFORNIA - DEPARTMENT OF TRANSPORTATION
Caltrans
CONSULTANT FUNCTIONAL SUPERVISOR: MIKE CHESNEY
CALCULATED-DESIGNED BY: REBECCA KELCHER
CHECKED BY: JOSUE VAGLIENTY
REVISED BY
DATE REVISED

LAST REVISION 06-08-10
DATE PLOTTED => 13-AUG-2012
TIME PLOTTED => 14:04

NOTE:
1. FOR ACCURATE RIGHT OF WAY DATA, CONTACT RIGHT OF WAY ENGINEERING AT THE DISTRICT OFFICE.

Dist	COUNTY	ROUTE	POST MILES TOTAL PROJECT	SHEET No.	TOTAL SHEETS
12	Ora	91	0.9/5.4	24	885

REGISTERED CIVIL ENGINEER 7/24/12 DATE

8-13-12
PLANS APPROVAL DATE

REGISTERED PROFESSIONAL ENGINEER JOSUE J. VAGLIENTY No. 70783 Exp. 6-30-13 CIVIL STATE OF CALIFORNIA

THE STATE OF CALIFORNIA OR ITS OFFICERS OR AGENTS SHALL NOT BE RESPONSIBLE FOR THE ACCURACY OR COMPLETENESS OF SCANNED COPIES OF THIS PLAN SHEET.

RBF CONSULTING
14725 ALTON PKWY
IRVINE, CA 92618

OCTA
550 S. MAIN STREET
ORANGE, CA 92863

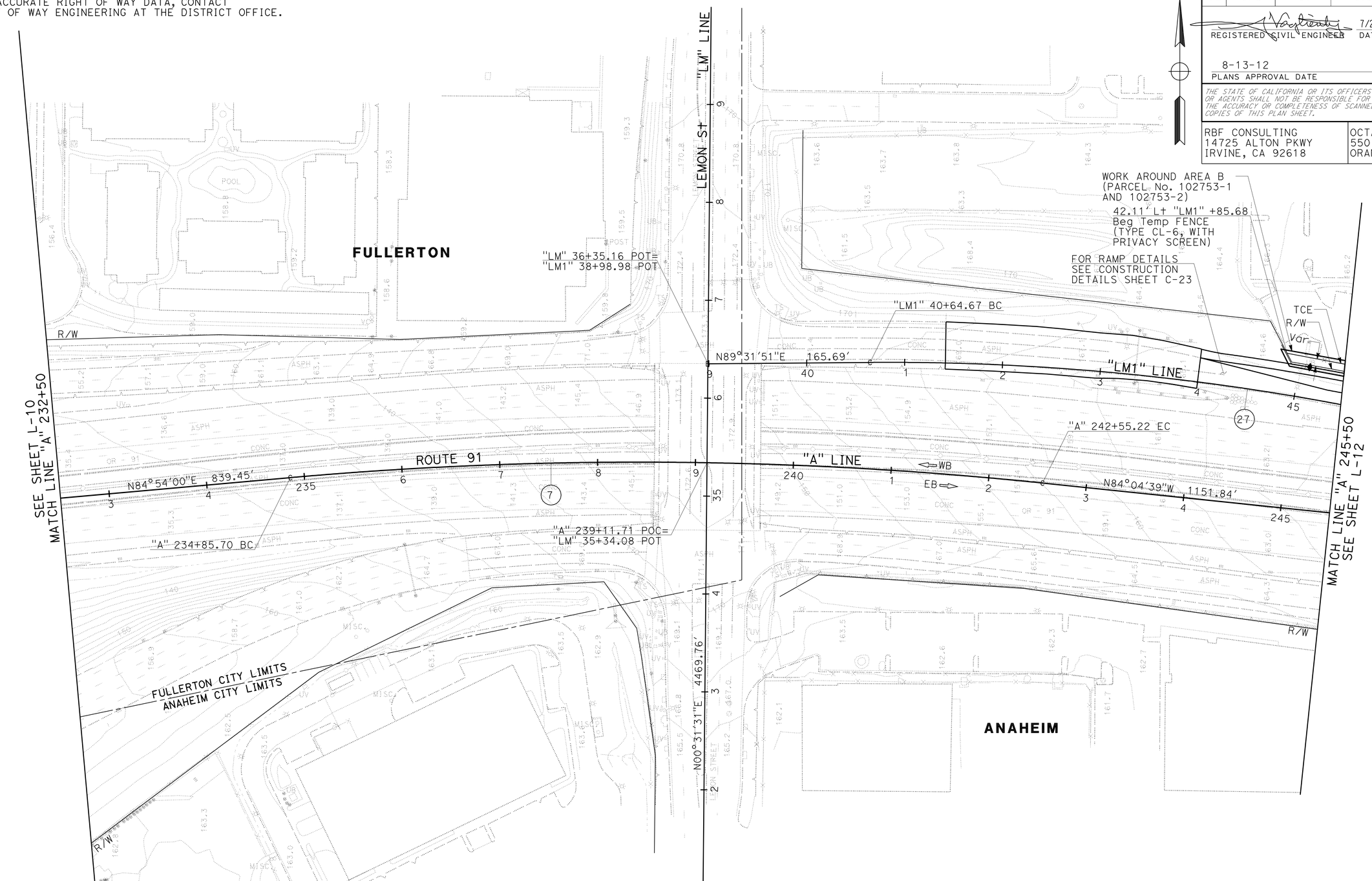

CURVE DATA

No. (X)	R	Δ	T	L
(7)	4000.00'	11°01'21"	385.95'	769.52'
(27)	2480.00'	12°26'41"	270.39'	538.66'

LAYOUT

SCALE: 1" = 50'

L-11

STATE OF CALIFORNIA - DEPARTMENT OF TRANSPORTATION
Caltrans

CONSULTANT FUNCTIONAL SUPERVISOR: MIKE CHESNEY
CALCULATED-DESIGNED BY: REBECCA KELCHER
CHECKED BY: JOSUE VAGLIENTY
REVISED BY
DATE REVISED

LAST REVISION DATE PLOTTED => 13-AUG-2012
06-08-10 TIME PLOTTED => 14:04

NOTE:
1. FOR ACCURATE RIGHT OF WAY DATA, CONTACT RIGHT OF WAY ENGINEERING AT THE DISTRICT OFFICE.

Dist	COUNTY	ROUTE	POST MILES TOTAL PROJECT	SHEET No.	TOTAL SHEETS
12	Ora	91	0.9/5.4	25	885

REGISTERED CIVIL ENGINEER 7/24/12 DATE

8-13-12
PLANS APPROVAL DATE

REGISTERED PROFESSIONAL ENGINEER JOSUE J. VAGLIENTY No. 70783 Exp. 6-30-13 CIVIL STATE OF CALIFORNIA

THE STATE OF CALIFORNIA OR ITS OFFICERS OR AGENTS SHALL NOT BE RESPONSIBLE FOR THE ACCURACY OR COMPLETENESS OF SCANNED COPIES OF THIS PLAN SHEET.

RBF CONSULTING
14725 ALTON PKWY
IRVINE, CA 92618

OCTA
550 S. MAIN STREET
ORANGE, CA 92863

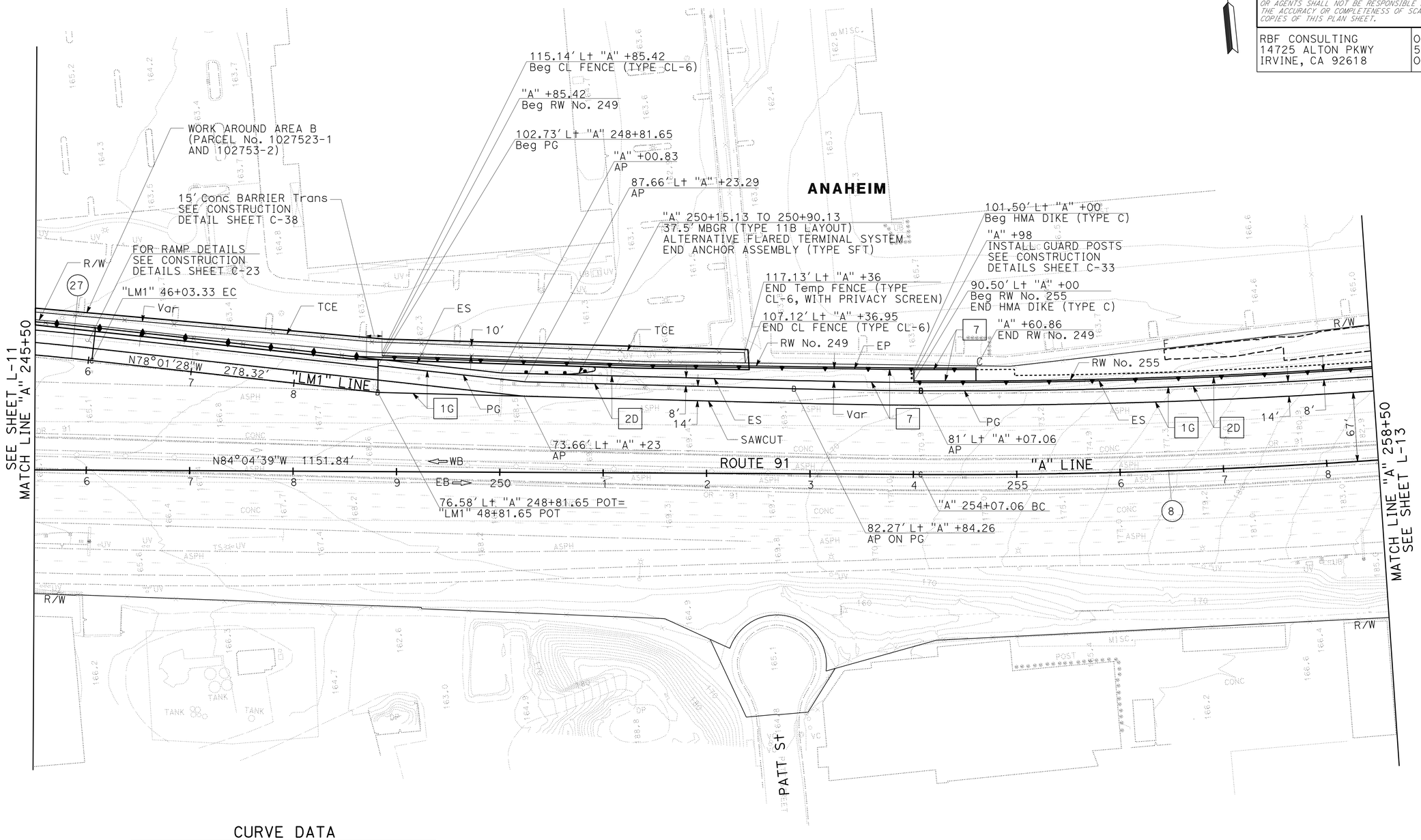

CURVE DATA

No. (X)	R	Δ	T	L
(8)	6030.00'	5°39'41"	298.16'	595.83'
(27)	2480.00'	12°26'41"	270.39'	538.66'

LAYOUT
SCALE: 1" = 50'

L-12

REVISED BY | DATE REVISED
REBECCA KELCHER | JOSUE VAGLIENTY
CALCULATED-DESIGNED BY | CHECKED BY
CONSULTANT FUNCTIONAL SUPERVISOR | MIKE CHESNEY
STATE OF CALIFORNIA - DEPARTMENT OF TRANSPORTATION
Caltrans

LAST REVISION 06-08-10 | DATE PLOTTED => 13-AUG-2012 | TIME PLOTTED => 14:04

NOTE:
1. FOR ACCURATE RIGHT OF WAY DATA, CONTACT RIGHT OF WAY ENGINEERING AT THE DISTRICT OFFICE.

Dist	COUNTY	ROUTE	POST MILES TOTAL PROJECT	SHEET No.	TOTAL SHEETS
12	Ora	91	0.9/5.4	26	885

REGISTERED CIVIL ENGINEER 8/1/12 DATE

8-13-12
PLANS APPROVAL DATE

REGISTERED PROFESSIONAL ENGINEER JOSUE J. VAGLIENTY No. 70783 Exp. 6-30-13 CIVIL STATE OF CALIFORNIA

THE STATE OF CALIFORNIA OR ITS OFFICERS OR AGENTS SHALL NOT BE RESPONSIBLE FOR THE ACCURACY OR COMPLETENESS OF SCANNED COPIES OF THIS PLAN SHEET.

RBF CONSULTING
14725 ALTON PKWY
IRVINE, CA 92618

OCTA
550 S. MAIN STREET
ORANGE, CA 92863

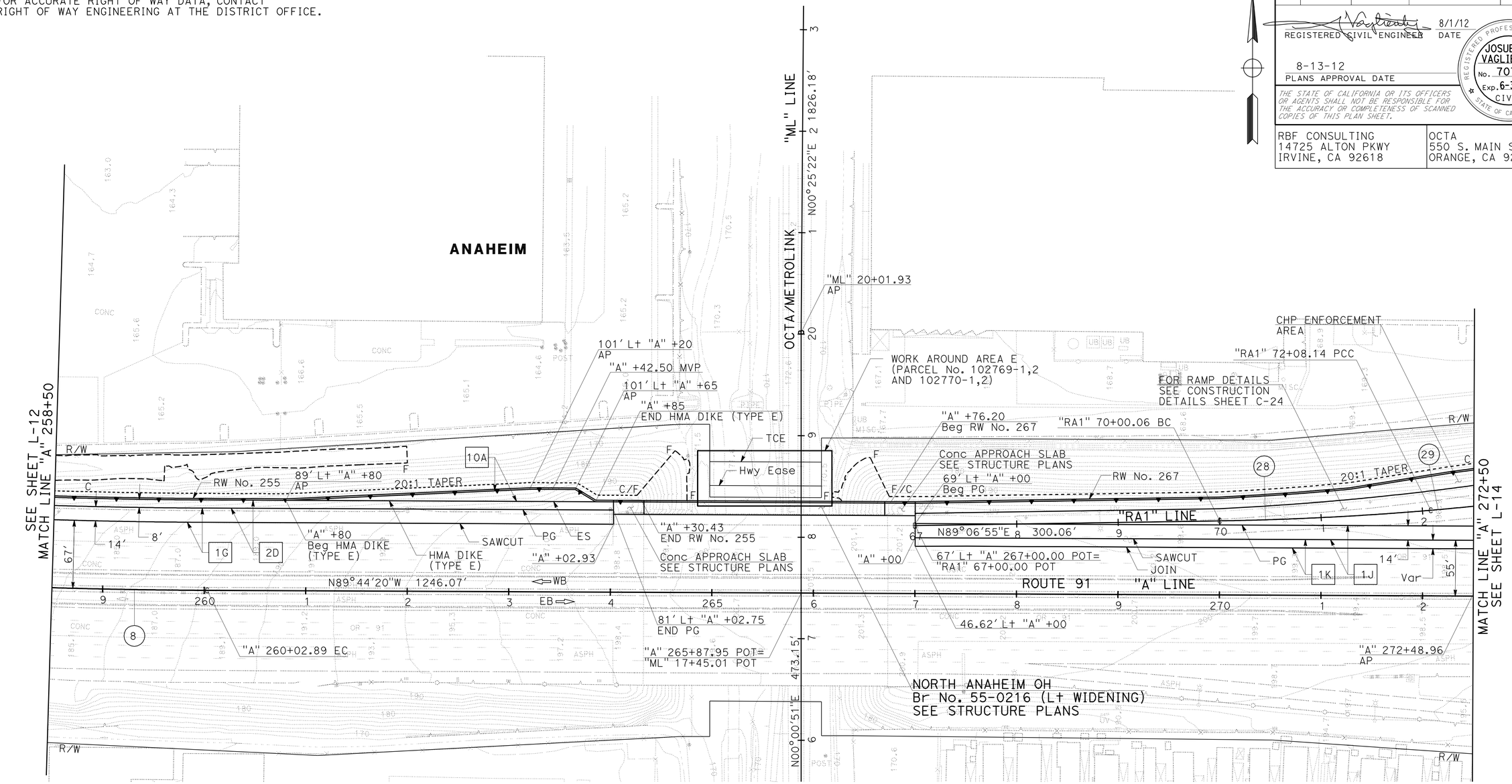

CURVE DATA

No. (X)	R	Δ	T	L
(8)	6030.00'	5°39'41"	298.16'	595.83'
(28)	3000.00'	3°58'26"	104.08'	208.08'
(29)	2200.00'	9°33'03"	183.79'	366.72'

LAYOUT

SCALE: 1" = 50'

L-13

STATE OF CALIFORNIA - DEPARTMENT OF TRANSPORTATION
Caltrans

CONSULTANT FUNCTIONAL SUPERVISOR: MIKE CHESNEY
CALCULATED-DESIGNED BY: REBECCA KELCHER
CHECKED BY: JOSUE VAGLIENTY
REVISED BY
DATE REVISED

LAST REVISION 06-08-10
DATE PLOTTED => 13-AUG-2012
TIME PLOTTED => 14:04

Dist	COUNTY	ROUTE	POST MILES TOTAL PROJECT	SHEET No.	TOTAL SHEETS
12	Ora	91	0.9/5.4	27	885

REGISTERED CIVIL ENGINEER 3/7/12 DATE

8-13-12
PLANS APPROVAL DATE

REGISTERED PROFESSIONAL ENGINEER JOSUE J. VAGLIENTY No. 70783 Exp. 6-30-13 CIVIL STATE OF CALIFORNIA

THE STATE OF CALIFORNIA OR ITS OFFICERS OR AGENTS SHALL NOT BE RESPONSIBLE FOR THE ACCURACY OR COMPLETENESS OF SCANNED COPIES OF THIS PLAN SHEET.

RBF CONSULTING
14725 ALTON PKWY
IRVINE, CA 92618

OCTA
550 S. MAIN STREET
ORANGE, CA 92863

NOTES:
1. FOR ACCURATE RIGHT OF WAY DATA, CONTACT RIGHT OF WAY ENGINEERING AT THE DISTRICT OFFICE.
2. FOR RAYMOND Ave DETAILS, SEE CONSTRUCTION DETAILS SHEET C-29.
3. FOR PAVEMENT TRANSITION DETAILS, SEE CONSTRUCTION DETAILS SHEET C-39.

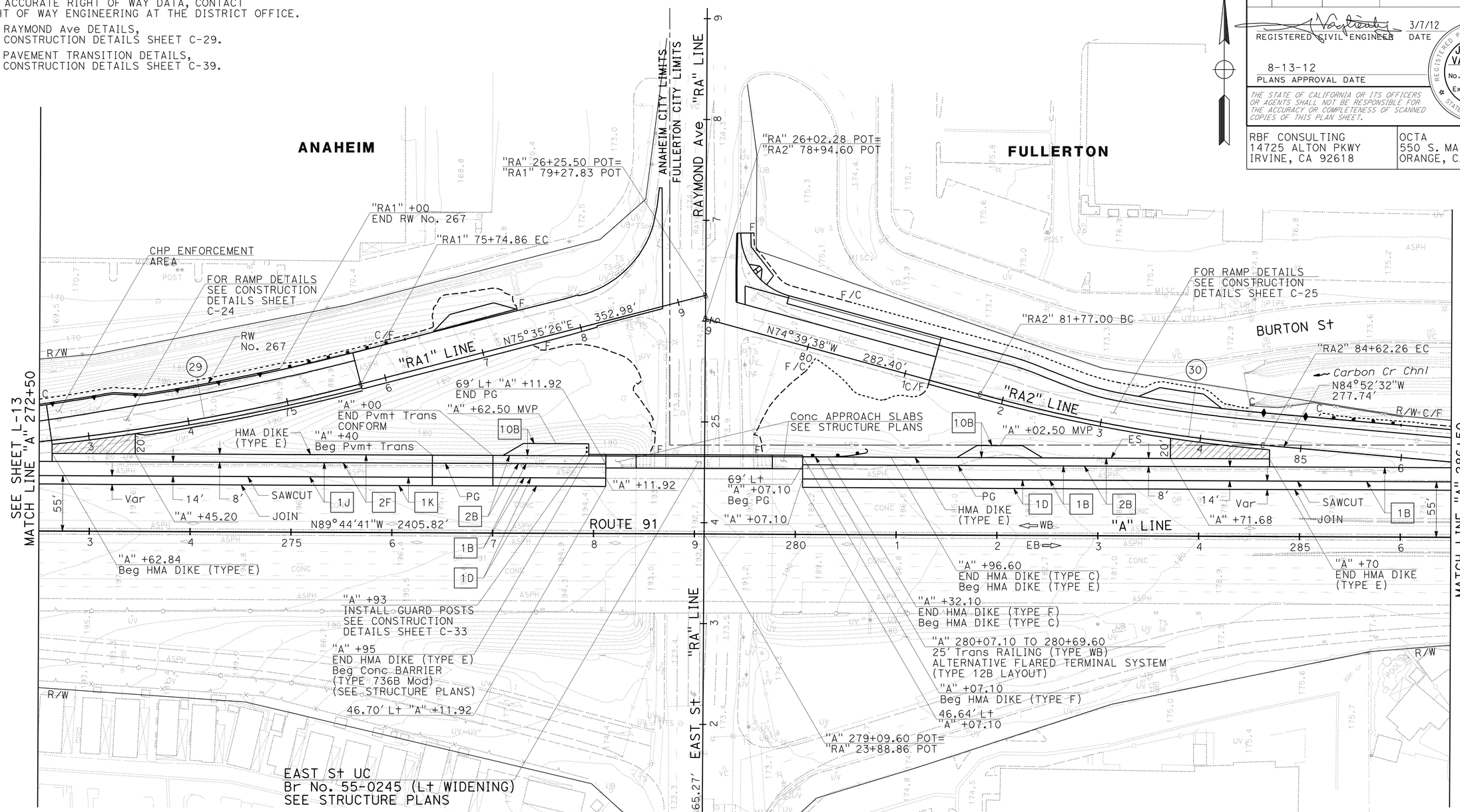

CURVE DATA

No. (X)	R	Δ	T	L
29	2200.00'	9°33'03"	183.79'	366.72'
30	1600.00'	10°12'54"	143.01'	285.26'

LAYOUT

SCALE: 1" = 50'

L-14

STATE OF CALIFORNIA - DEPARTMENT OF TRANSPORTATION
Caltrans

CONSULTANT FUNCTIONAL SUPERVISOR: MIKE CHESNEY
CALCULATED-DESIGNED BY: JOSUE VAGLIENTY
CHECKED BY: REBECCA KELCHER
REVISED BY / DATE REVISED

LAST REVISION 06-08-10 | DATE PLOTTED => 13-AUG-2012 | TIME PLOTTED => 14:04

NOTE:
1. FOR ACCURATE RIGHT OF WAY DATA, CONTACT RIGHT OF WAY ENGINEERING AT THE DISTRICT OFFICE.

Dist	COUNTY	ROUTE	POST MILES TOTAL PROJECT	SHEET No.	TOTAL SHEETS
12	Ora	91	0.9/5.4	28	885

REGISTERED CIVIL ENGINEER 7/24/12 DATE

8-13-12
PLANS APPROVAL DATE

REGISTERED PROFESSIONAL ENGINEER JOSUE J. VAGLIENTY No. 70783 Exp. 6-30-13 CIVIL STATE OF CALIFORNIA

THE STATE OF CALIFORNIA OR ITS OFFICERS OR AGENTS SHALL NOT BE RESPONSIBLE FOR THE ACCURACY OR COMPLETENESS OF SCANNED COPIES OF THIS PLAN SHEET.

RBF CONSULTING
14725 ALTON PKWY
IRVINE, CA 92618

OCTA
550 S. MAIN STREET
ORANGE, CA 92863

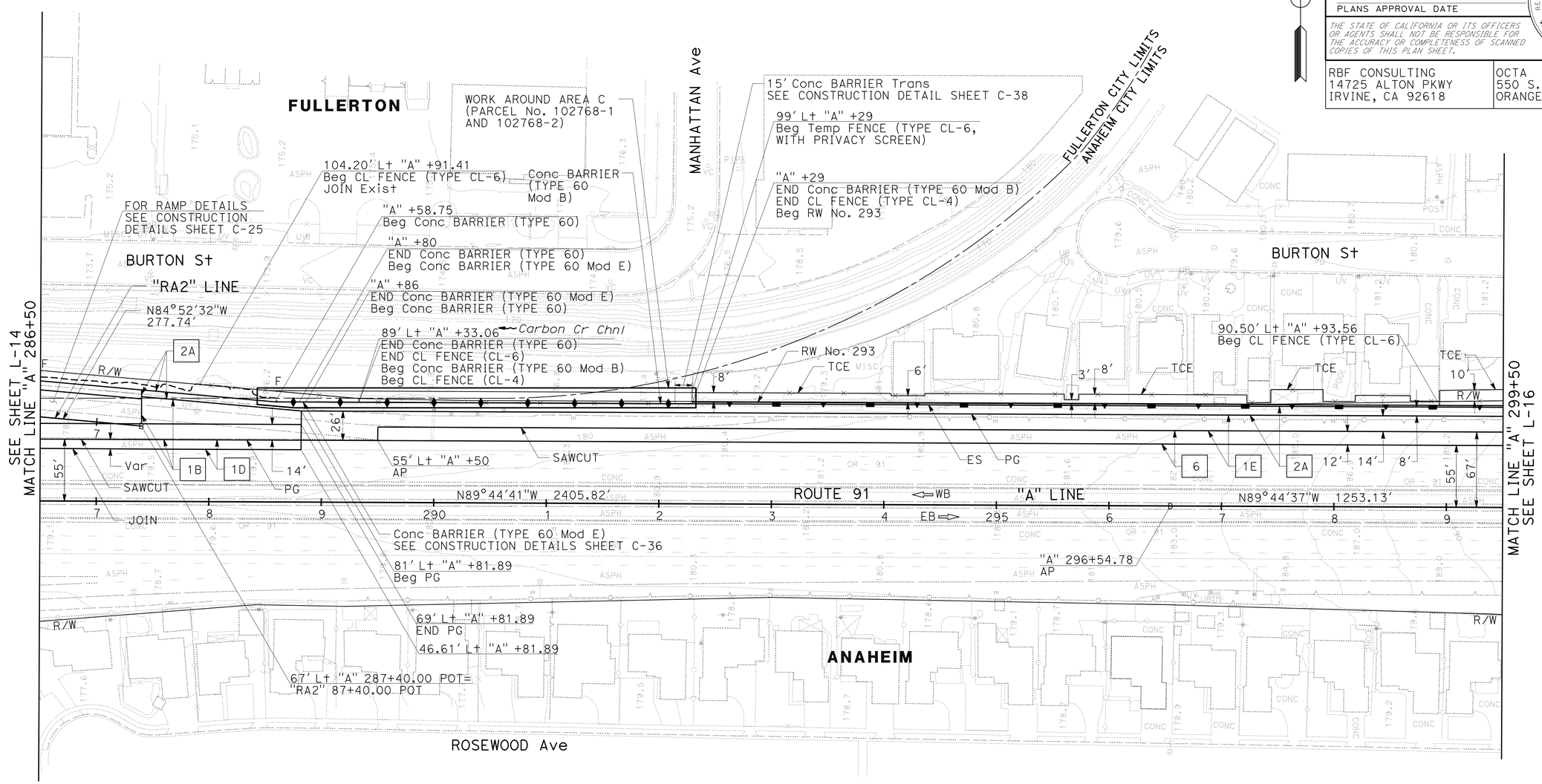

LAYOUT

SCALE: 1" = 50'

L-15

STATE OF CALIFORNIA - DEPARTMENT OF TRANSPORTATION
Caltrans

CONSULTANT FUNCTIONAL SUPERVISOR: MIKE CHESNEY
CALCULATED-DESIGNED BY: JOSUE VAGLIENTY
CHECKED BY: REBECCA KELCHER
REVISED BY
DATE REVISED

LAST REVISION DATE PLOTTED => 13-AUG-2012
06-08-10 TIME PLOTTED => 14:05

Dist	COUNTY	ROUTE	POST MILES TOTAL PROJECT	SHEET No.	TOTAL SHEETS
12	Ora	91	0.9/5.4	29	885

REGISTERED CIVIL ENGINEER 3/7/12 DATE

8-13-12
PLANS APPROVAL DATE

REGISTERED PROFESSIONAL ENGINEER JOSUE J. VAGLIENTY No. 70783 Exp. 6-30-13 CIVIL STATE OF CALIFORNIA

THE STATE OF CALIFORNIA OR ITS OFFICERS OR AGENTS SHALL NOT BE RESPONSIBLE FOR THE ACCURACY OR COMPLETENESS OF SCANNED COPIES OF THIS PLAN SHEET.

RBF CONSULTING
14725 ALTON PKWY
IRVINE, CA 92618

OCTA
550 S. MAIN STREET
ORANGE, CA 92863

NOTES:

1. FOR ACCURATE RIGHT OF WAY DATA, CONTACT RIGHT OF WAY ENGINEERING AT THE DISTRICT OFFICE.
2. FOR ACACIA St DETAILS, SEE CONSTRUCTION DETAILS SHEET C-29.
3. FOR Conc ANCHOR BLOCK AND CONNECTION DETAILS, SEE "CONNECTION DETAIL DD" ON Std PLAN A77J3.

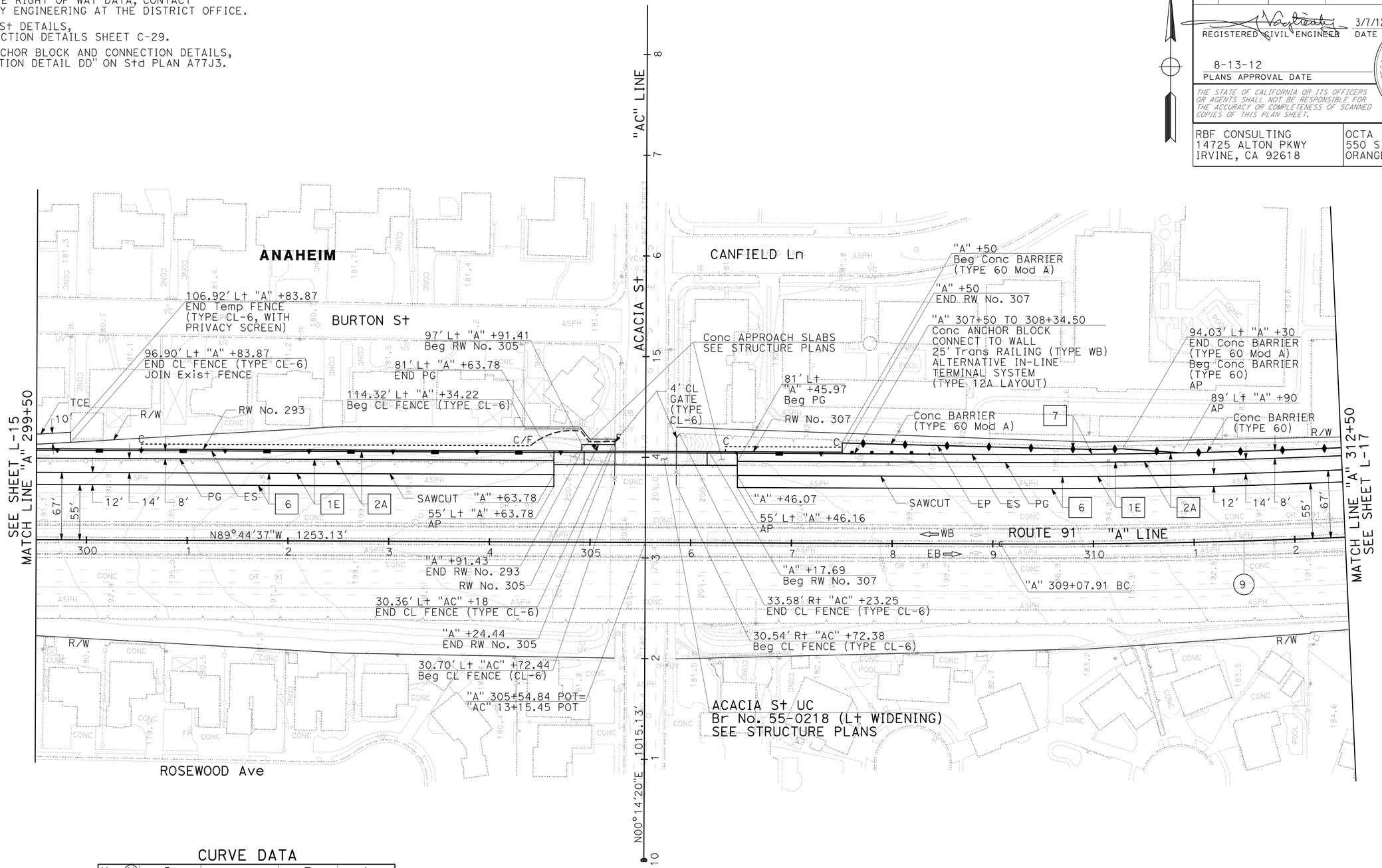

CURVE DATA

No. (X)	R	Δ	T	L
9	7010.00'	4°12'02"	257.09'	513.94'

LAYOUT

SCALE: 1" = 50'

L-16

STATE OF CALIFORNIA - DEPARTMENT OF TRANSPORTATION

Caltrans

CONSULTANT FUNCTIONAL SUPERVISOR: MIKE CHESNEY

CALCULATED-DESIGNED BY: REBECCA KELCHER

CHECKED BY: JOSUE VAGLIENTY

REVISED BY

DATE REVISED

LAST REVISION 06-08-10

DATE PLOTTED => 17-AUG-2012
TIME PLOTTED => 06:35

Dist	COUNTY	ROUTE	POST MILES TOTAL PROJECT	SHEET No.	TOTAL SHEETS
12	Ora	91	0.9/5.4	30	885

REGISTERED CIVIL ENGINEER 7/24/12 DATE

8-13-12
PLANS APPROVAL DATE

REGISTERED PROFESSIONAL ENGINEER JOSUE J. VAGLIENTY No. 70783 Exp. 6-30-13 CIVIL STATE OF CALIFORNIA

THE STATE OF CALIFORNIA OR ITS OFFICERS OR AGENTS SHALL NOT BE RESPONSIBLE FOR THE ACCURACY OR COMPLETENESS OF SCANNED COPIES OF THIS PLAN SHEET.

RBF CONSULTING
14725 ALTON PKWY
IRVINE, CA 92618

OCTA
550 S. MAIN STREET
ORANGE, CA 92863

NOTES:

1. FOR ACCURATE RIGHT OF WAY DATA, CONTACT RIGHT OF WAY ENGINEERING AT THE DISTRICT OFFICE.
2. FOR Conc BARRIER TERMINAL SECTION, SEE CONSTRUCTION DETAILS SHEET C-37.

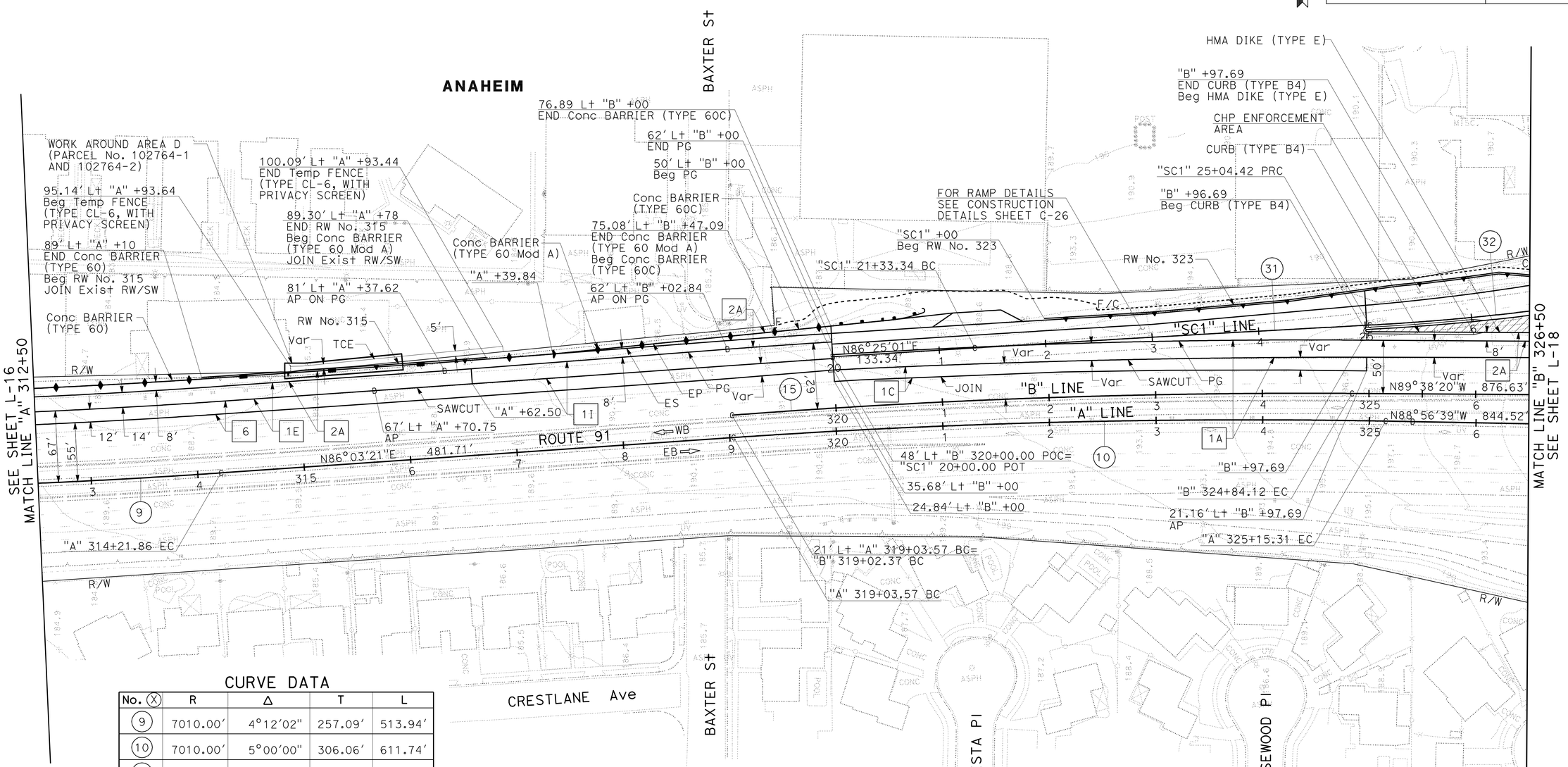

CURVE DATA

No. (X)	R	Δ	T	L
9	7010.00'	4°12'02"	257.09'	513.94'
10	7010.00'	5°00'00"	306.06'	611.74'
15	7032.80'	4°44'32"	291.04'	581.75'
31	39165.79'	0°32'34"	185.54'	371.08'
32	2200.00'	11°26'41"	220.46'	439.45'

LAYOUT

SCALE: 1" = 50'

L-17

STATE OF CALIFORNIA - DEPARTMENT OF TRANSPORTATION

Caltrans

CONSULTANT FUNCTIONAL SUPERVISOR: MIKE CHESNEY

CALCULATED-DESIGNED BY: REBECCA KELCHER

CHECKED BY: JOSUE VAGLIENTY

REVISED BY

DATE REVISED

LAST REVISION 06-08-10

DATE PLOTTED => 13-AUG-2012
TIME PLOTTED => 14:05

Dist	COUNTY	ROUTE	POST MILES TOTAL PROJECT	SHEET No.	TOTAL SHEETS
12	Ora	91	0.9/5.4	31	885

REGISTERED CIVIL ENGINEER 3/7/12 DATE

8-13-12
PLANS APPROVAL DATE

REGISTERED PROFESSIONAL ENGINEER JOSUE J. VAGLIENTY No. 70783 Exp. 6-30-13 CIVIL STATE OF CALIFORNIA

THE STATE OF CALIFORNIA OR ITS OFFICERS OR AGENTS SHALL NOT BE RESPONSIBLE FOR THE ACCURACY OR COMPLETENESS OF SCANNED COPIES OF THIS PLAN SHEET.

RBF CONSULTING
14725 ALTON PKWY
IRVINE, CA 92618

OCTA
550 S. MAIN STREET
ORANGE, CA 92863

NOTES:

1. FOR ACCURATE RIGHT OF WAY DATA, CONTACT RIGHT OF WAY ENGINEERING AT THE DISTRICT OFFICE.
2. FOR STATE COLLEGE Blvd DETAILS, SEE CONSTRUCTION DETAILS SHEET C-30.

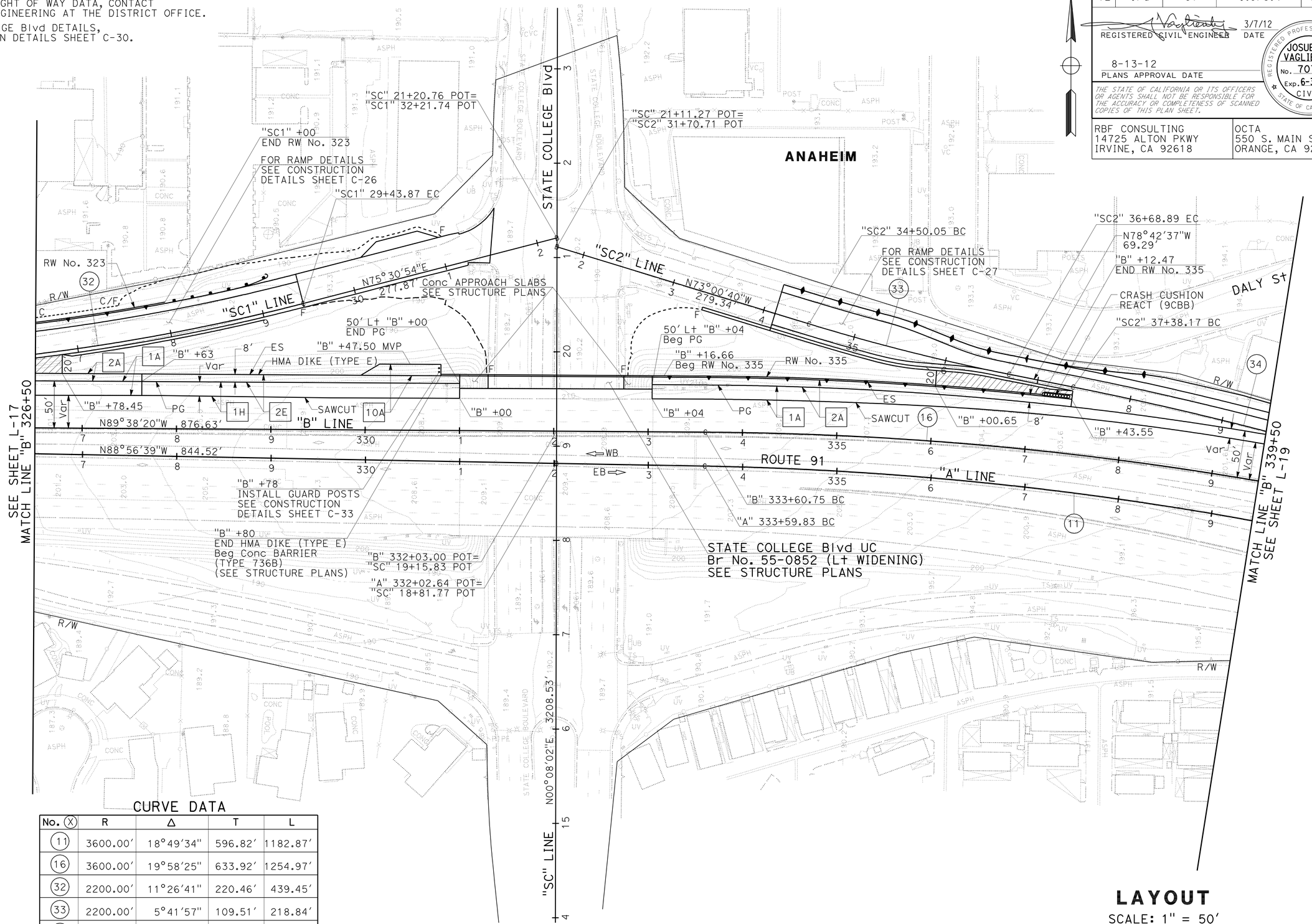

CURVE DATA

No. (X)	R	Δ	T	L
11	3600.00'	18°49'34"	596.82'	1182.87'
16	3600.00'	19°58'25"	633.92'	1254.97'
32	2200.00'	11°26'41"	220.46'	439.45'
33	2200.00'	5°41'57"	109.51'	218.84'
34	3648.00'	4°16'10"	135.98'	271.83'

LAYOUT

SCALE: 1" = 50'

L-18

STATE OF CALIFORNIA - DEPARTMENT OF TRANSPORTATION

Caltrans

CONSULTANT FUNCTIONAL SUPERVISOR: MIKE CHESNEY

CALCULATED-DESIGNED BY: JOSUE VAGLIENTY

CHECKED BY

REVISED BY

DATE REVISED

LAST REVISION 06-08-10

DATE PLOTTED => 13-AUG-2012
TIME PLOTTED => 14:05

NOTE:
1. FOR ACCURATE RIGHT OF WAY DATA, CONTACT RIGHT OF WAY ENGINEERING AT THE DISTRICT OFFICE.

Dist	COUNTY	ROUTE	POST MILES TOTAL PROJECT	SHEET No.	TOTAL SHEETS
12	Ora	91	0.9/5.4	32	885

REGISTERED CIVIL ENGINEER 3/7/12 DATE

8-13-12
PLANS APPROVAL DATE

REGISTERED PROFESSIONAL ENGINEER JOSUE J. VAGLIENTY No. 70783 Exp. 6-30-13 CIVIL STATE OF CALIFORNIA

THE STATE OF CALIFORNIA OR ITS OFFICERS OR AGENTS SHALL NOT BE RESPONSIBLE FOR THE ACCURACY OR COMPLETENESS OF SCANNED COPIES OF THIS PLAN SHEET.

RBF CONSULTING
14725 ALTON PKWY
IRVINE, CA 92618

OCTA
550 S. MAIN STREET
ORANGE, CA 92863

CURVE DATA

No. (X)	R	Δ	T	L
11	3600.00'	18°49'34"	596.82'	1182.87'
16	3600.00'	19°58'25"	633.92'	1254.97'
34	3648.00'	4°16'10"	135.98'	271.83'

LAYOUT
SCALE: 1" = 50'

L-19

STATE OF CALIFORNIA - DEPARTMENT OF TRANSPORTATION
Caltrans
CONSULTANT FUNCTIONAL SUPERVISOR: MIKE CHESNEY
CALCULATED-DESIGNED BY: REBECCA KELCHER
CHECKED BY: JOSUE VAGLIENTY
REVISED BY
DATE REVISED

LAST REVISION DATE PLOTTED => 13-AUG-2012
TIME PLOTTED => 14:05
06-08-10

Dist	COUNTY	ROUTE	POST MILES TOTAL PROJECT	SHEET No.	TOTAL SHEETS
12	Ora	91	0.9/5.4	33	885

REGISTERED CIVIL ENGINEER 3/7/12 DATE

8-13-12
PLANS APPROVAL DATE

REGISTERED PROFESSIONAL ENGINEER JOSUE J. VAGLIENTY No. 70783 Exp. 6-30-13 CIVIL STATE OF CALIFORNIA

THE STATE OF CALIFORNIA OR ITS OFFICERS OR AGENTS SHALL NOT BE RESPONSIBLE FOR THE ACCURACY OR COMPLETENESS OF SCANNED COPIES OF THIS PLAN SHEET.

RBF CONSULTING
14725 ALTON PKWY
IRVINE, CA 92618

OCTA
550 S. MAIN STREET
ORANGE, CA 92863

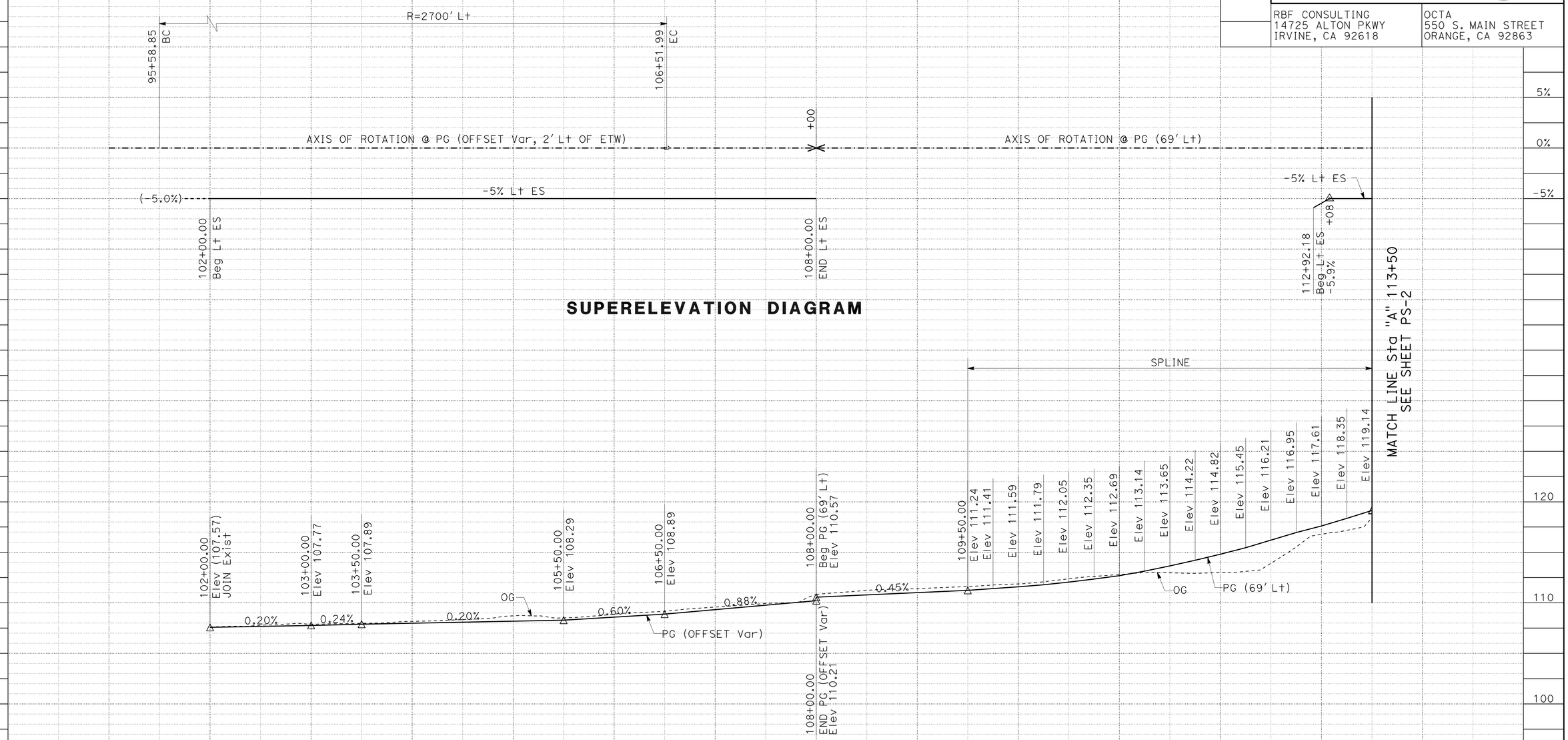

SUPERELEVATION DIAGRAM

ELEVATIONS AS SHOWN HEREON ARE IN TERMS OF THE NORTH AMERICAN VERTICAL DATUM OF 1988 (NAVD88) BASED LOCALLY UPON THE FOLLOWING COUNTY OF ORANGE BENCHMARKS:

- 2504, OCS BM 2F-25-04, 162.70, 2005
- 3586, OCS BM 2D-35-86, 188.58, 2006
- 6405, OCS BM 1G-164-05, 109.80, 2005

PROFILE

"A" LINE PG
WB ROUTE 91

PROFILE AND SUPERELEVATION DIAGRAM

SCALE: Horiz 1" = 50'
Vert 1" = 5'

PS-1

REVISED BY | DATE REVISED
REBECCA KELCHER | JOSUE VAGLIENTY
CALCULATED-DESIGNED BY | CHECKED BY
CONSULTANT FUNCTIONAL SUPERVISOR: MIKE CHESNEY
STATE OF CALIFORNIA - DEPARTMENT OF TRANSPORTATION
Caltrans

LAST REVISION 06-08-10 | DATE PLOTTED => 13-AUG-2012 | TIME PLOTTED => 14:05

Dist	COUNTY	ROUTE	POST MILES TOTAL PROJECT	SHEET No.	TOTAL SHEETS
12	Ora	91	0.9/5.4	34	885

REGISTERED CIVIL ENGINEER 3/7/12 DATE

8-13-12
PLANS APPROVAL DATE

REGISTERED PROFESSIONAL ENGINEER JOSUE J. VAGLIENTY No. 70783 Exp. 6-30-13 CIVIL STATE OF CALIFORNIA

THE STATE OF CALIFORNIA OR ITS OFFICERS OR AGENTS SHALL NOT BE RESPONSIBLE FOR THE ACCURACY OR COMPLETENESS OF SCANNED COPIES OF THIS PLAN SHEET.

RBF CONSULTING
14725 ALTON PKWY
IRVINE, CA 92618

OCTA
550 S. MAIN STREET
ORANGE, CA 92863

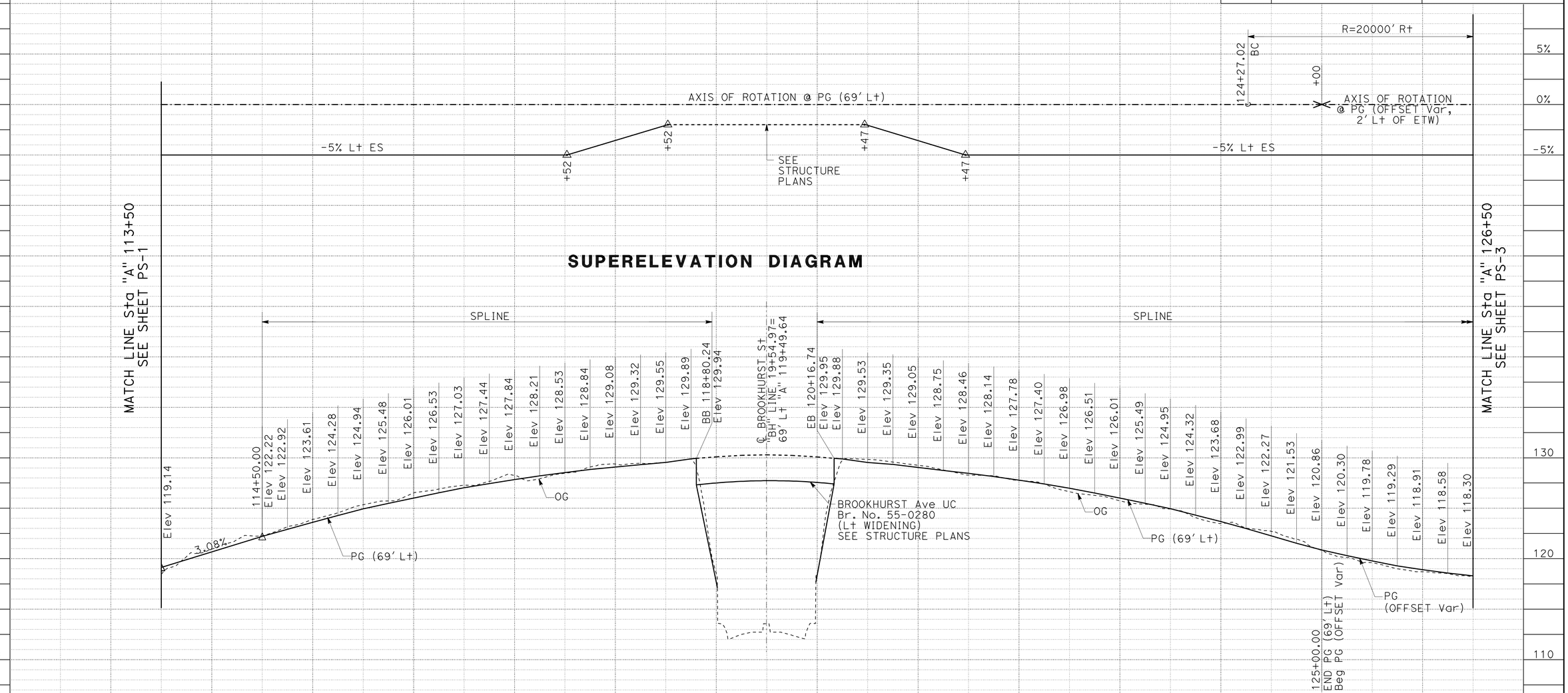

SUPERELEVATION DIAGRAM

PROFILE

"A" LINE PG
WB ROUTE 91

PROFILE AND SUPERELEVATION DIAGRAM

SCALE: Horiz 1" = 50'
Vert 1" = 5'

PS-2

STATE OF CALIFORNIA - DEPARTMENT OF TRANSPORTATION

Caltrans

CONSULTANT FUNCTIONAL SUPERVISOR: MIKE CHESNEY

CALCULATED-DESIGNED BY: REBECCA KELCHER

CHECKED BY: JOSUE VAGLIENTY

REVISED BY

DATE REVISED

LAST REVISION 06-08-10

DATE PLOTTED => 13-AUG-2012
TIME PLOTTED => 14:05

Dist	COUNTY	ROUTE	POST MILES TOTAL PROJECT	SHEET No.	TOTAL SHEETS
12	Ora	91	0.9/5.4	35	885

REGISTERED CIVIL ENGINEER 3/7/12 DATE

8-13-12
PLANS APPROVAL DATE

REGISTERED PROFESSIONAL ENGINEER JOSUE J. VAGLIENTY No. 70783 Exp. 6-30-13 CIVIL STATE OF CALIFORNIA

THE STATE OF CALIFORNIA OR ITS OFFICERS OR AGENTS SHALL NOT BE RESPONSIBLE FOR THE ACCURACY OR COMPLETENESS OF SCANNED COPIES OF THIS PLAN SHEET.

RBF CONSULTING
14725 ALTON PKWY
IRVINE, CA 92618

OCTA
550 S. MAIN STREET
ORANGE, CA 92863

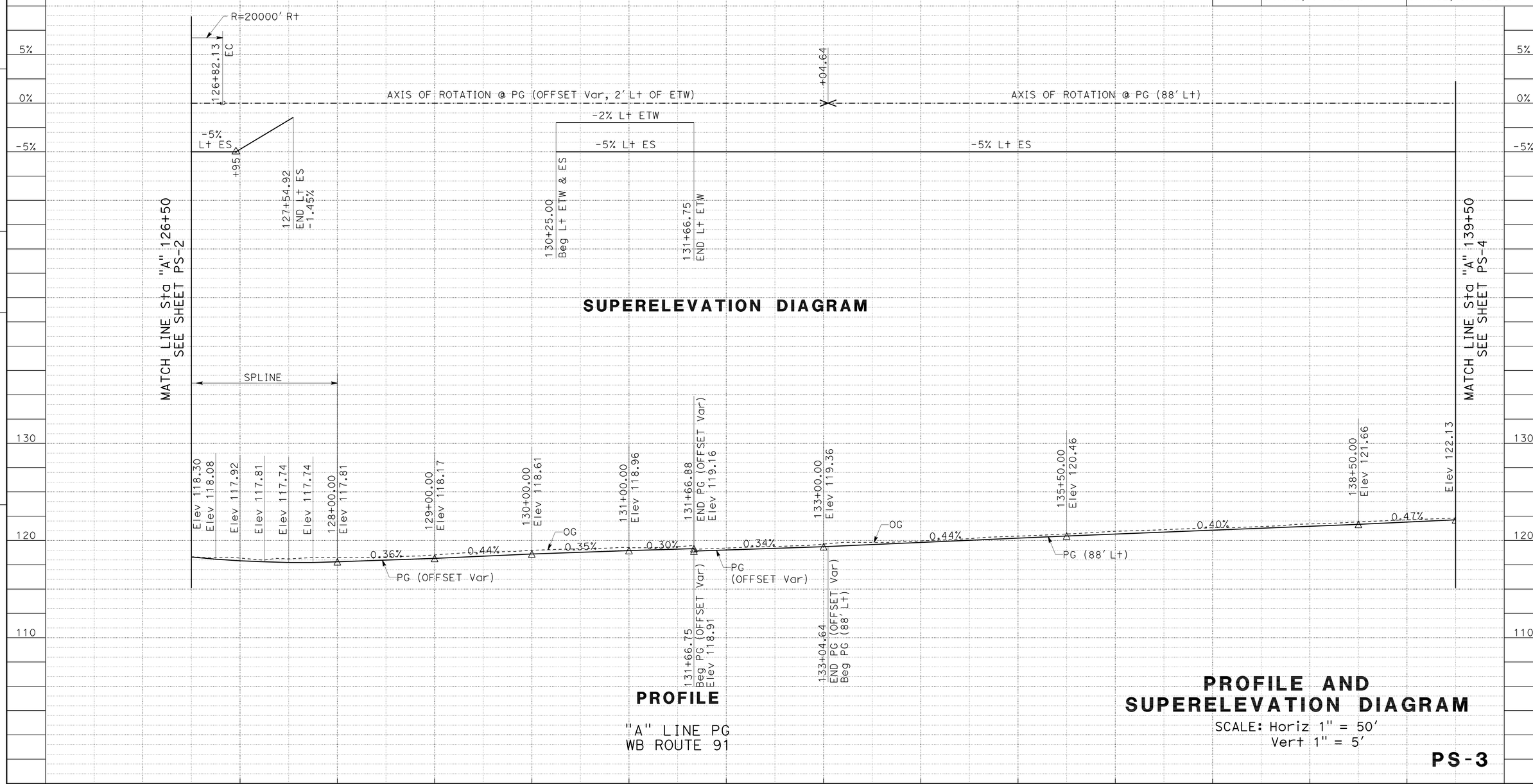

SUPERELEVATION DIAGRAM

PROFILE

"A" LINE PG
WB ROUTE 91

PROFILE AND SUPERELEVATION DIAGRAM

SCALE: Horiz 1" = 50'
Vert 1" = 5'

PS-3

REVISED BY | DATE REVISED
REBECCA KELCHER | JOSUE VAGLIENTY
CALCULATED-DESIGNED BY | CHECKED BY
CONSULTANT FUNCTIONAL SUPERVISOR: MIKE CHESNEY

STATE OF CALIFORNIA - DEPARTMENT OF TRANSPORTATION
Caltrans

LAST REVISION 06-08-10
DATE PLOTTED => 13-AUG-2012
TIME PLOTTED => 14:06

Dist	COUNTY	ROUTE	POST MILES TOTAL PROJECT	SHEET No.	TOTAL SHEETS
12	Ora	91	0.9/5.4	36	885

REGISTERED CIVIL ENGINEER 3/7/12 DATE

8-13-12
PLANS APPROVAL DATE

REGISTERED PROFESSIONAL ENGINEER JOSUE J. VAGLIENTY No. 70783 Exp. 6-30-13 CIVIL STATE OF CALIFORNIA

THE STATE OF CALIFORNIA OR ITS OFFICERS OR AGENTS SHALL NOT BE RESPONSIBLE FOR THE ACCURACY OR COMPLETENESS OF SCANNED COPIES OF THIS PLAN SHEET.

RBF CONSULTING
14725 ALTON PKWY
IRVINE, CA 92618

OCTA
550 S. MAIN STREET
ORANGE, CA 92863

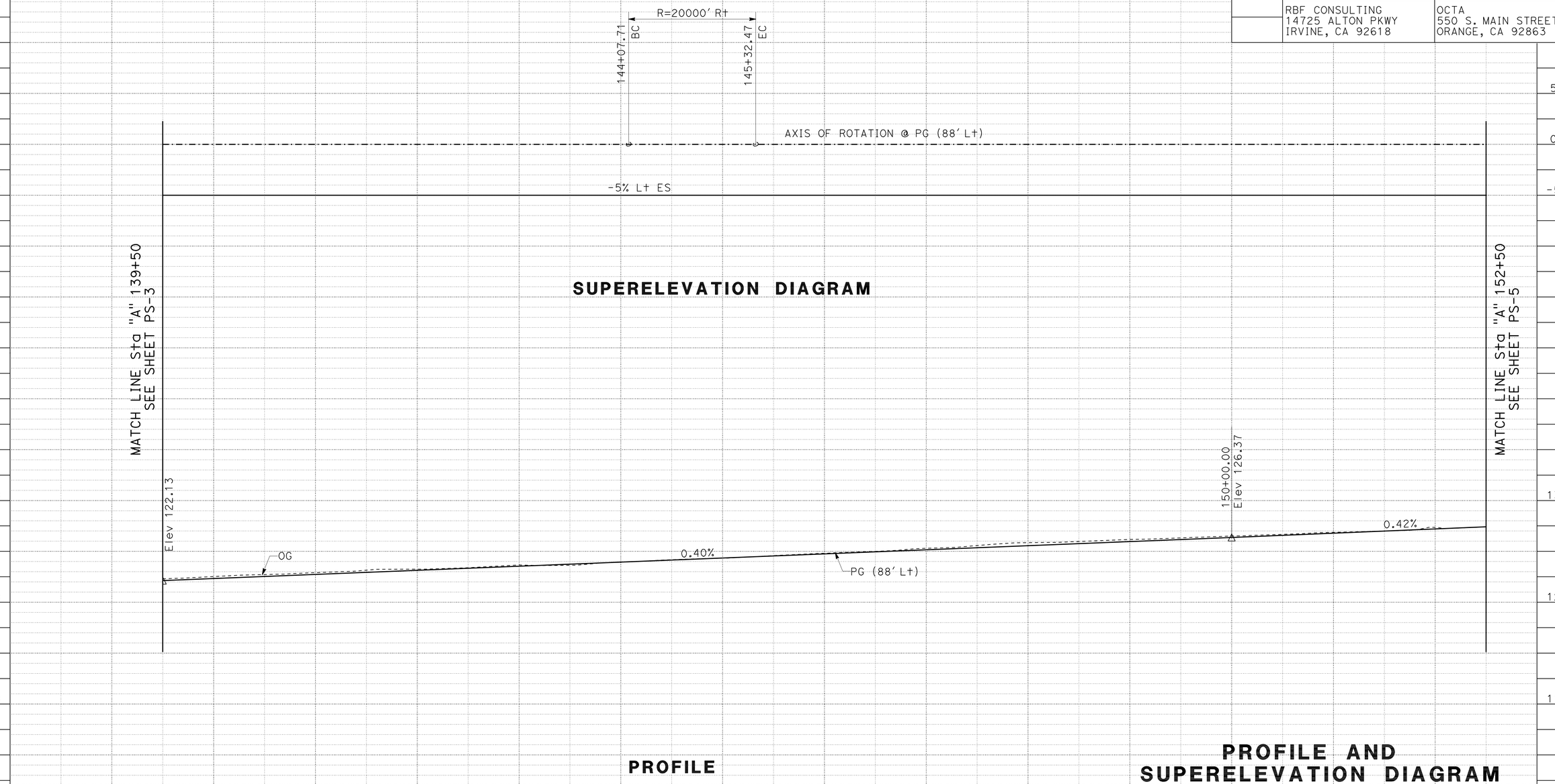

PROFILE

"A" LINE PG
WB ROUTE 91

PROFILE AND SUPERELEVATION DIAGRAM

SCALE: Horiz 1" = 50'
Vert 1" = 5'

PS-4

STATION		140+00	1	2	3	4	145+00	6	7	8	9	150+00	1	2	TOTAL
CY	Exc														
	Emb														

STATE OF CALIFORNIA - DEPARTMENT OF TRANSPORTATION
Caltrans

CONSULTANT FUNCTIONAL SUPERVISOR: MIKE CHESNEY
CALCULATED-DESIGNED BY: REBECCA KELCHER
CHECKED BY: JOSUE VAGLIENTY
REVISED BY
DATE REVISED

LAST REVISION DATE PLOTTED => 13-AUG-2012
06-08-10 TIME PLOTTED => 14:06

Dist	COUNTY	ROUTE	POST MILES TOTAL PROJECT	SHEET No.	TOTAL SHEETS
12	Ora	91	0.9/5.4	37	885

REGISTERED CIVIL ENGINEER 3/7/12 DATE

8-13-12
PLANS APPROVAL DATE

REGISTERED PROFESSIONAL ENGINEER JOSUE J. VAGLIENTY No. 70783 Exp. 6-30-13 CIVIL STATE OF CALIFORNIA

THE STATE OF CALIFORNIA OR ITS OFFICERS OR AGENTS SHALL NOT BE RESPONSIBLE FOR THE ACCURACY OR COMPLETENESS OF SCANNED COPIES OF THIS PLAN SHEET.

RBF CONSULTING
14725 ALTON PKWY
IRVINE, CA 92618

OCTA
550 S. MAIN STREET
ORANGE, CA 92863

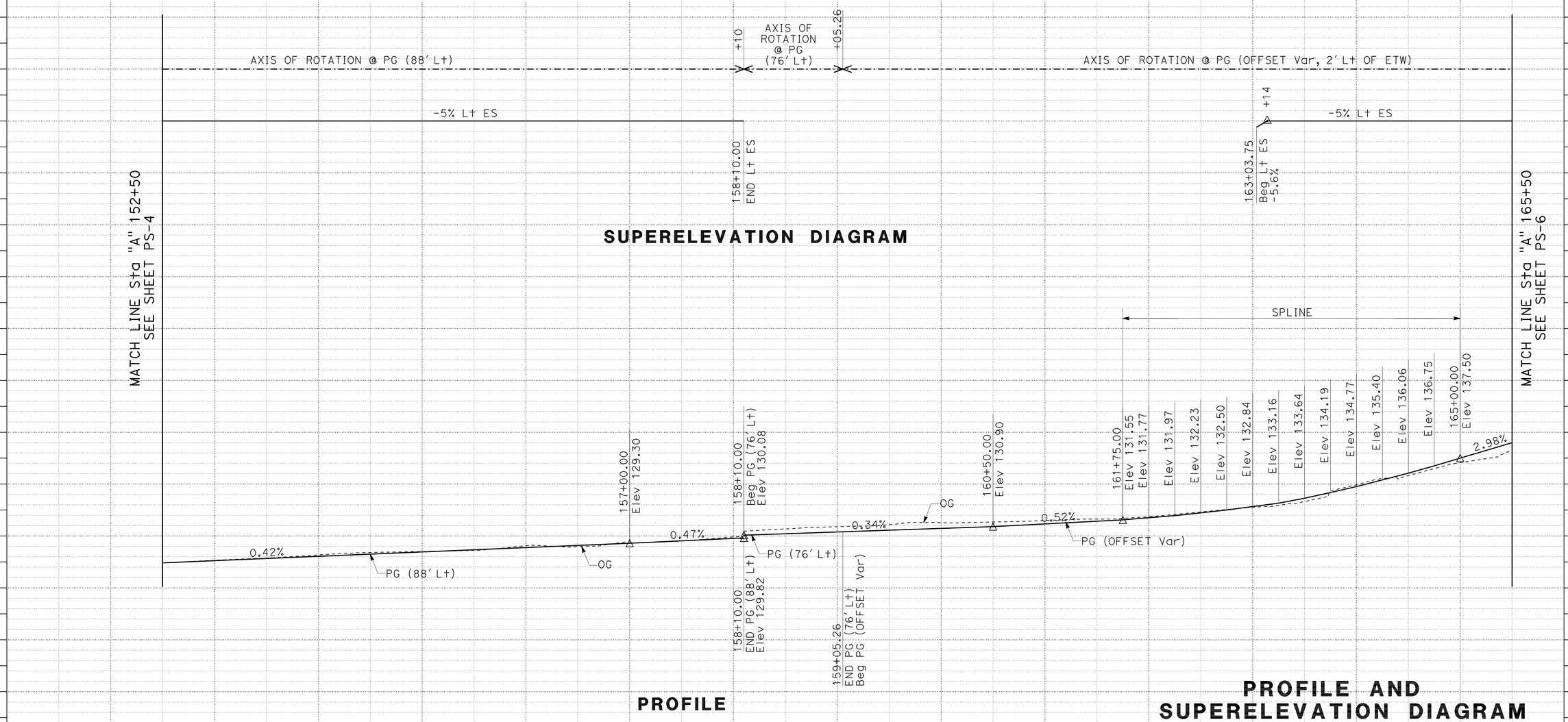

SUPERELEVATION DIAGRAM

PROFILE

"A" LINE PG
WB ROUTE 91

PROFILE AND SUPERELEVATION DIAGRAM

SCALE: Horiz 1" = 50'
Vert 1" = 5'

PS-5

STATE OF CALIFORNIA - DEPARTMENT OF TRANSPORTATION

Caltrans

CONSULTANT FUNCTIONAL SUPERVISOR: MIKE CHESNEY

CALCULATED-DESIGNED BY: JOSUE VAGLIENTY

CHECKED BY: REBECCA KELCHER

REVISED BY

DATE REVISED

LAST REVISION DATE PLOTTED => 13-AUG-2012
TIME PLOTTED => 14:06

06-08-10

Dist	COUNTY	ROUTE	POST MILES TOTAL PROJECT	SHEET No.	TOTAL SHEETS
12	Ora	91	0.9/5.4	38	885

REGISTERED CIVIL ENGINEER 3/7/12 DATE

8-13-12
PLANS APPROVAL DATE

REGISTERED PROFESSIONAL ENGINEER JOSUE J. VAGLIENTY No. 70783 Exp. 6-30-13 CIVIL STATE OF CALIFORNIA

THE STATE OF CALIFORNIA OR ITS OFFICERS OR AGENTS SHALL NOT BE RESPONSIBLE FOR THE ACCURACY OR COMPLETENESS OF SCANNED COPIES OF THIS PLAN SHEET.

RBF CONSULTING
14725 ALTON PKWY
IRVINE, CA 92618

OCTA
550 S. MAIN STREET
ORANGE, CA 92863

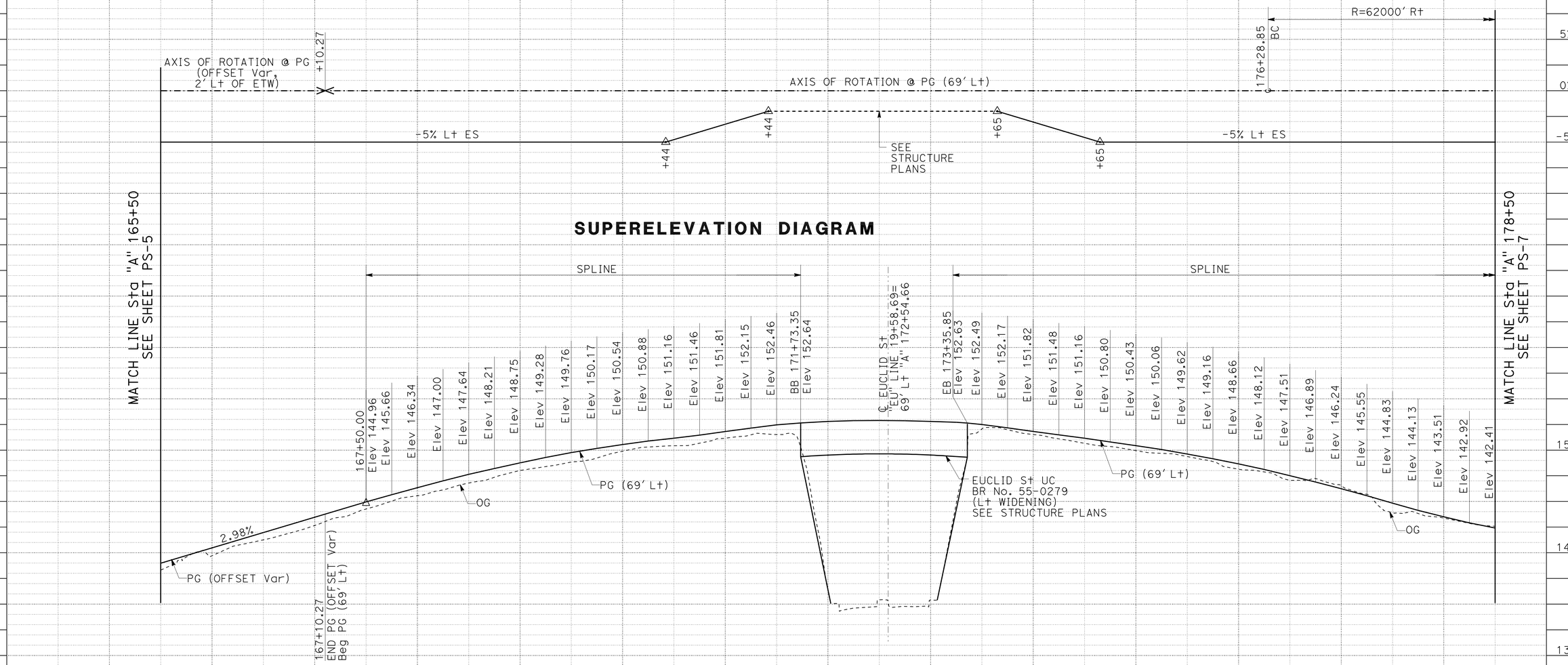

SUPERELEVATION DIAGRAM

PROFILE

"A" LINE PG
WB ROUTE 91

PROFILE AND SUPERELEVATION DIAGRAM

SCALE: Horiz 1" = 50'
Vert 1" = 5'

PS-6

REVISED BY | DATE REVISED
REBECCA KELCHER | JOSUE VAGLIENTY
CALCULATED-DESIGNED BY | CHECKED BY
CONSULTANT FUNCTIONAL SUPERVISOR
MIKE CHESNEY

STATE OF CALIFORNIA - DEPARTMENT OF TRANSPORTATION
Caltrans

LAST REVISION 06-08-10 | DATE PLOTTED => 13-AUG-2012 | TIME PLOTTED => 14:06

Dist	COUNTY	ROUTE	POST MILES TOTAL PROJECT	SHEET No.	TOTAL SHEETS
12	Ora	91	0.9/5.4	39	885

REGISTERED CIVIL ENGINEER 3/7/12 DATE

8-13-12
PLANS APPROVAL DATE

REGISTERED PROFESSIONAL ENGINEER JOSUE J. VAGLIENTY No. 70783 Exp. 6-30-13 CIVIL STATE OF CALIFORNIA

THE STATE OF CALIFORNIA OR ITS OFFICERS OR AGENTS SHALL NOT BE RESPONSIBLE FOR THE ACCURACY OR COMPLETENESS OF SCANNED COPIES OF THIS PLAN SHEET.

RBF CONSULTING
14725 ALTON PKWY
IRVINE, CA 92618

OCTA
550 S. MAIN STREET
ORANGE, CA 92863

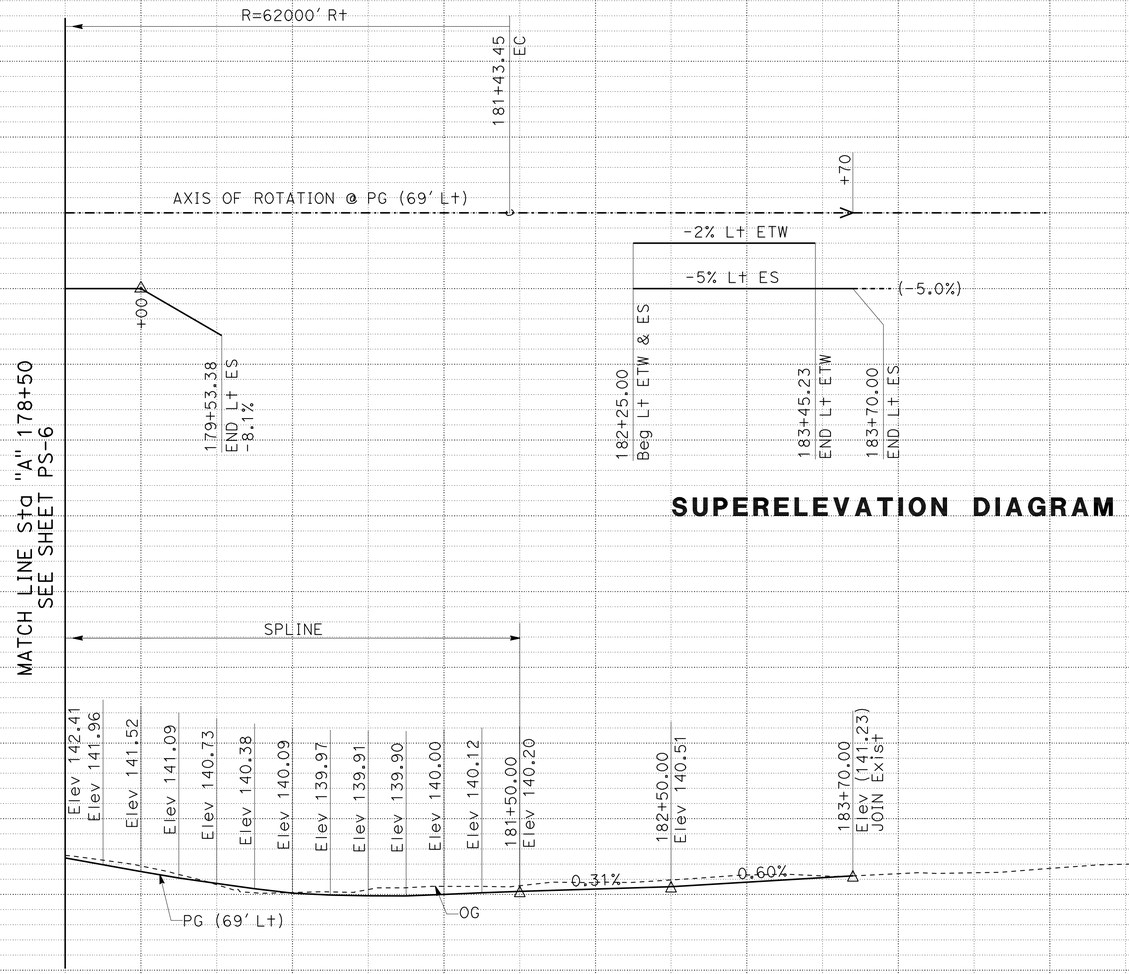

SUPERELEVATION DIAGRAM

PROFILE

"A" LINE PG
WB ROUTE 91

PROFILE AND SUPERELEVATION DIAGRAM

SCALE: Horiz 1" = 50'
Vert 1" = 5'

PS-7

STATION	9	180+00	1	2	3	4	185+00	6	7	8	9	190+00	1	TOTAL
CY Exc														
CY Emb														

STATE OF CALIFORNIA - DEPARTMENT OF TRANSPORTATION
Caltrans

CONSULTANT FUNCTIONAL SUPERVISOR: MIKE CHESNEY
CALCULATED-DESIGNED BY: REBECCA KELCHER
CHECKED BY: JOSUE VAGLIENTY
REVISED BY
DATE REVISED

LAST REVISION DATE PLOTTED => 13-AUG-2012
TIME PLOTTED => 14:06
06-08-10

Dist	COUNTY	ROUTE	POST MILES TOTAL PROJECT	SHEET No.	TOTAL SHEETS
12	Ora	91	0.9/5.4	40	885

REGISTERED CIVIL ENGINEER 3/7/12 DATE

8-13-12
PLANS APPROVAL DATE

REGISTERED PROFESSIONAL ENGINEER JOSUE J. VAGLIENTY No. 70783 Exp. 6-30-13 CIVIL STATE OF CALIFORNIA

THE STATE OF CALIFORNIA OR ITS OFFICERS OR AGENTS SHALL NOT BE RESPONSIBLE FOR THE ACCURACY OR COMPLETENESS OF SCANNED COPIES OF THIS PLAN SHEET.

RBF CONSULTING
14725 ALTON PKWY
IRVINE, CA 92618

OCTA
550 S. MAIN STREET
ORANGE, CA 92863

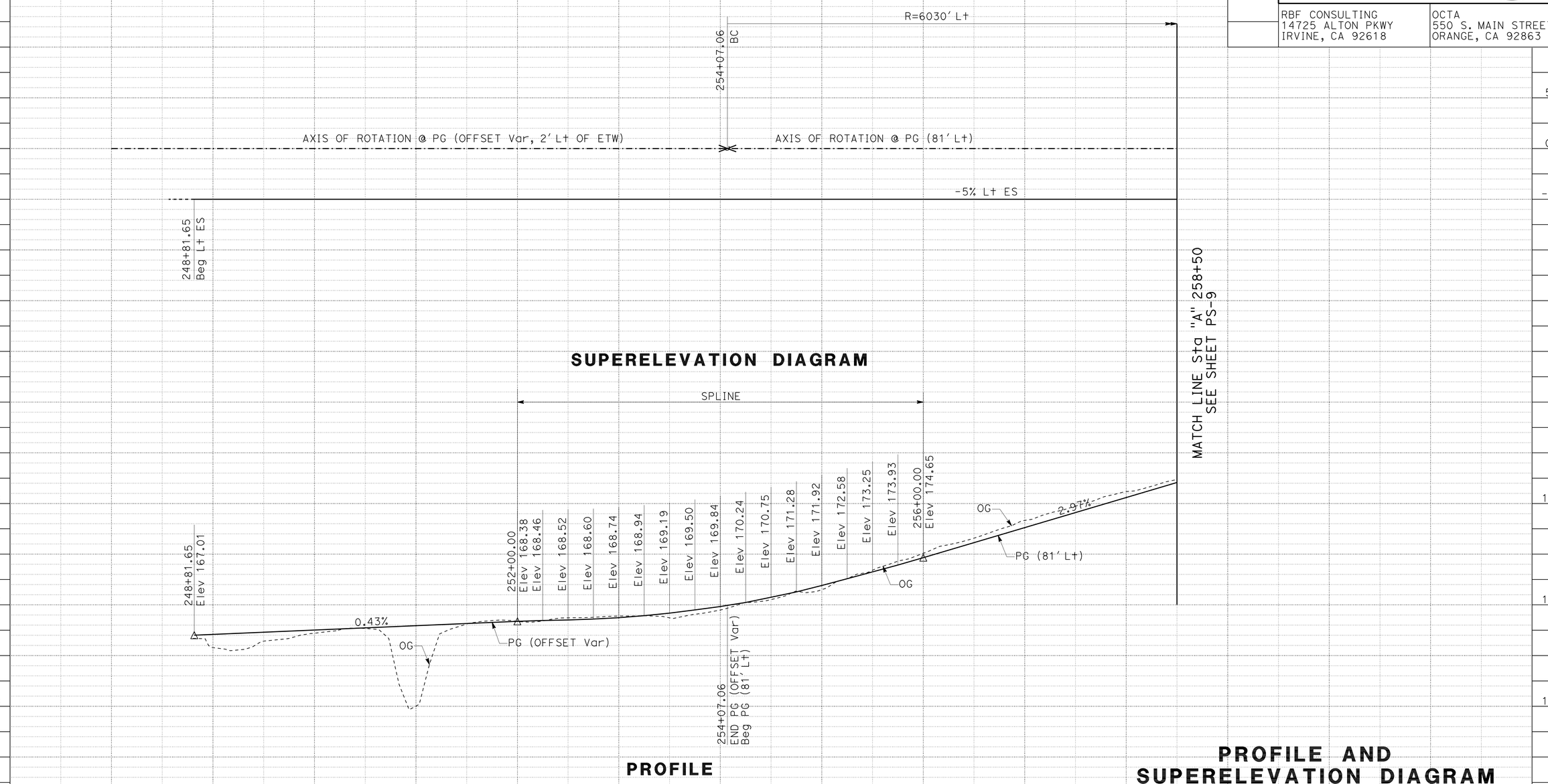

PROFILE AND SUPERELEVATION DIAGRAM

SCALE: Horiz 1" = 50'
Vert 1" = 5'

PS-8

REVISED BY | DATE REVISED
REBECCA KELCHER | JOSUE VAGLIENTY
CALCULATED-DESIGNED BY | CHECKED BY
CONSULTANT FUNCTIONAL SUPERVISOR
MIKE CHESNEY
STATE OF CALIFORNIA - DEPARTMENT OF TRANSPORTATION
Caltrans

LAST REVISION 06-08-10 | DATE PLOTTED => 13-AUG-2012 | TIME PLOTTED => 14:06

Dist	COUNTY	ROUTE	POST MILES TOTAL PROJECT	SHEET No.	TOTAL SHEETS
12	Ora	91	0.9/5.4	41	885

REGISTERED CIVIL ENGINEER 3/7/12 DATE

8-13-12
PLANS APPROVAL DATE

REGISTERED PROFESSIONAL ENGINEER JOSUE J. VAGLIENTY No. 70783 Exp. 6-30-13 CIVIL STATE OF CALIFORNIA

THE STATE OF CALIFORNIA OR ITS OFFICERS OR AGENTS SHALL NOT BE RESPONSIBLE FOR THE ACCURACY OR COMPLETENESS OF SCANNED COPIES OF THIS PLAN SHEET.

RBF CONSULTING
14725 ALTON PKWY
IRVINE, CA 92618

OCTA
550 S. MAIN STREET
ORANGE, CA 92863

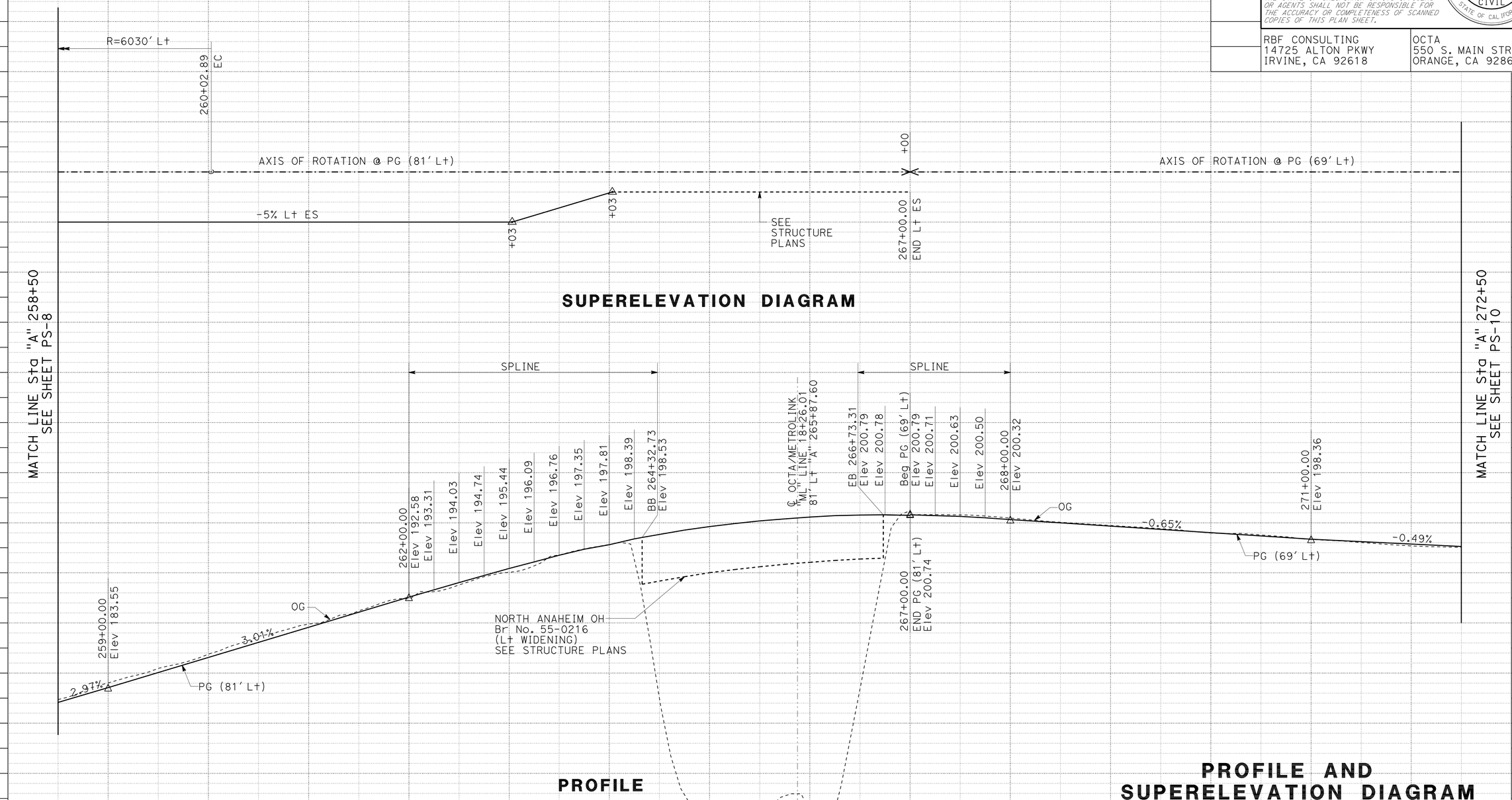

SUPERELEVATION DIAGRAM

PROFILE

"A" LINE PG
WB ROUTE 91

PROFILE AND SUPERELEVATION DIAGRAM

SCALE: Horiz 1" = 50'
Vert 1" = 5'

PS-9

REVISED BY | DATE REVISED
REBECCA KELCHER | JOSUE VAGLIENTY
CALCULATED-DESIGNED BY | CHECKED BY
CONSULTANT FUNCTIONAL SUPERVISOR
MIKE CHESNEY

STATE OF CALIFORNIA - DEPARTMENT OF TRANSPORTATION
Caltrans

LAST REVISION 06-08-10 | DATE PLOTTED => 13-AUG-2012 | TIME PLOTTED => 14:06

Dist	COUNTY	ROUTE	POST MILES TOTAL PROJECT	SHEET No.	TOTAL SHEETS
12	Ora	91	0.9/5.4	42	885

REGISTERED CIVIL ENGINEER 3/7/12 DATE

8-13-12
PLANS APPROVAL DATE

REGISTERED PROFESSIONAL ENGINEER JOSUE J. VAGLIENTY No. 70783 Exp. 6-30-13 CIVIL STATE OF CALIFORNIA

THE STATE OF CALIFORNIA OR ITS OFFICERS OR AGENTS SHALL NOT BE RESPONSIBLE FOR THE ACCURACY OR COMPLETENESS OF SCANNED COPIES OF THIS PLAN SHEET.

RBF CONSULTING
14725 ALTON PKWY
IRVINE, CA 92618

OCTA
550 S. MAIN STREET
ORANGE, CA 92863

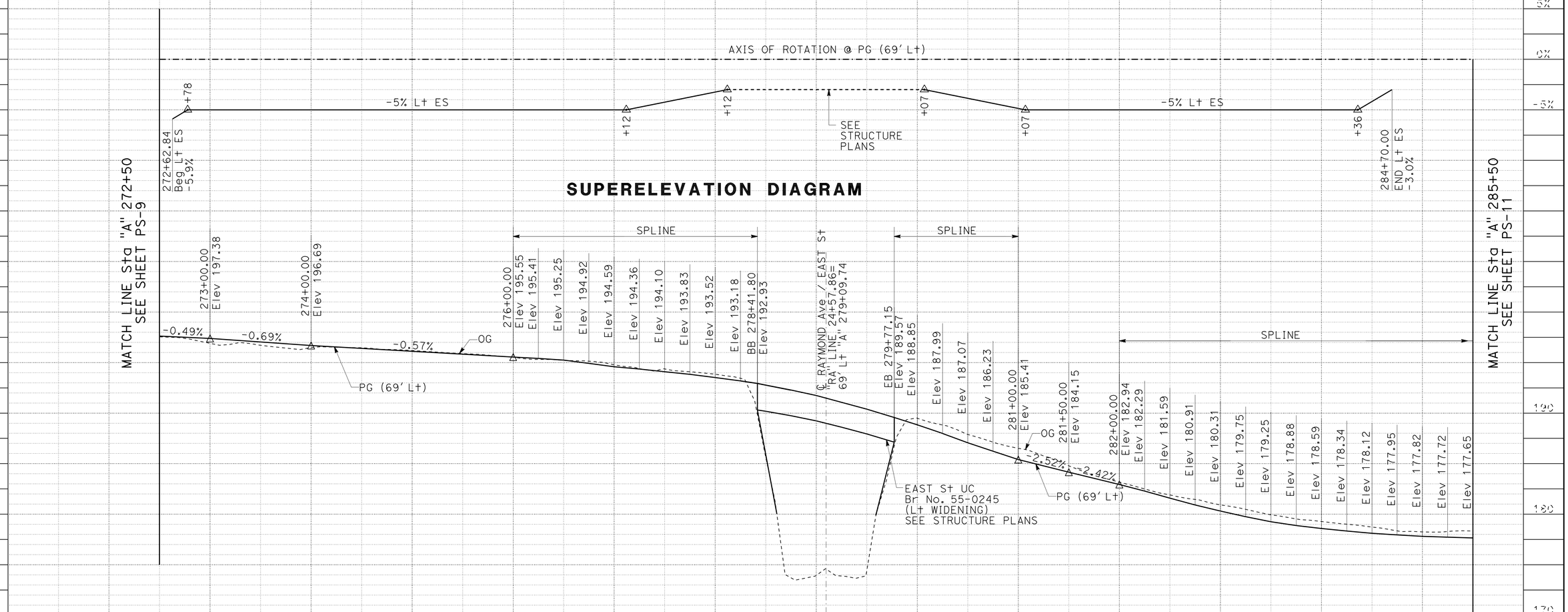

SUPERELEVATION DIAGRAM

PROFILE

"A" LINE PG
WB ROUTE 91

PROFILE AND SUPERELEVATION DIAGRAM

SCALE: Horiz 1" = 50'
Vert 1" = 5'

PS-10

STATION	3	4	275+00	6	7	8	9	280+00	1	2	3	4	285+00	TOTAL
CY Exc														
CY Emb														

STATE OF CALIFORNIA - DEPARTMENT OF TRANSPORTATION
Caltrans

CONSULTANT FUNCTIONAL SUPERVISOR: MIKE CHESNEY
CALCULATED-DESIGNED BY: JOSUE VAGLIENTY
CHECKED BY: REBECCA KELCHER
REVISED BY
DATE REVISED

LAST REVISION 06-08-10
DATE PLOTTED => 13-AUG-2012
TIME PLOTTED => 14:06

Dist	COUNTY	ROUTE	POST MILES TOTAL PROJECT	SHEET No.	TOTAL SHEETS
12	Ora	91	0.9/5.4	43	885

REGISTERED CIVIL ENGINEER 3/7/12 DATE

8-13-12
PLANS APPROVAL DATE

REGISTERED PROFESSIONAL ENGINEER JOSUE J. VAGLIENTY No. 70783 Exp. 6-30-13 CIVIL STATE OF CALIFORNIA

THE STATE OF CALIFORNIA OR ITS OFFICERS OR AGENTS SHALL NOT BE RESPONSIBLE FOR THE ACCURACY OR COMPLETENESS OF SCANNED COPIES OF THIS PLAN SHEET.

RBF CONSULTING
14725 ALTON PKWY
IRVINE, CA 92618

OCTA
550 S. MAIN STREET
ORANGE, CA 92863

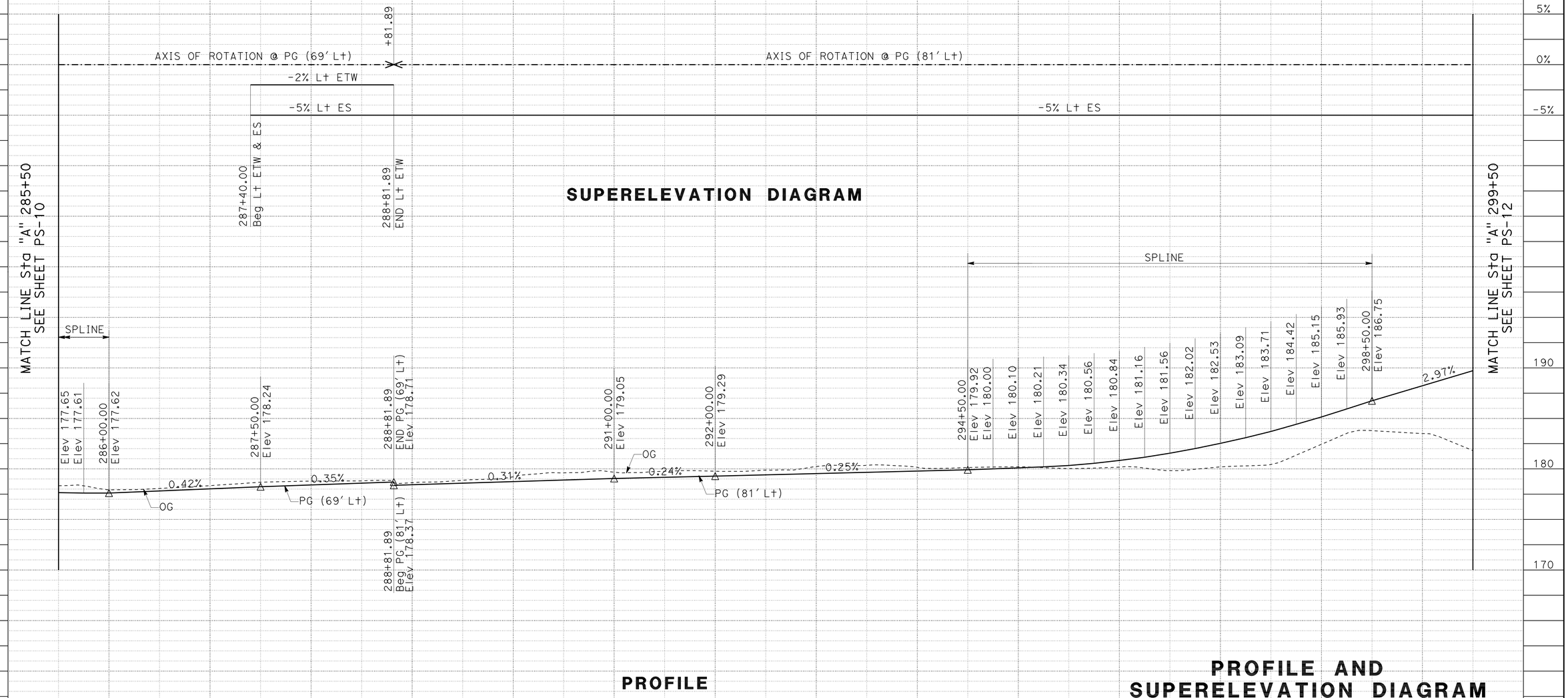

PROFILE

"A" LINE PG
WB ROUTE 91

PROFILE AND SUPERELEVATION DIAGRAM

SCALE: Horiz 1" = 50'
Vert 1" = 5'

PS-11

REVISED BY
DATE REVISED
REBECCA KELCHER
JOSUE VAGLIENTY
CALCULATED-DESIGNED BY
CHECKED BY
CONSULTANT FUNCTIONAL SUPERVISOR
MIKE CHESNEY
STATE OF CALIFORNIA - DEPARTMENT OF TRANSPORTATION
Caltrans

LAST REVISION 06-08-10
DATE PLOTTED => 13-AUG-2012
TIME PLOTTED => 14:06

Dist	COUNTY	ROUTE	POST MILES TOTAL PROJECT	SHEET No.	TOTAL SHEETS
12	Ora	91	0.9/5.4	44	885

REGISTERED CIVIL ENGINEER 3/7/12 DATE

8-13-12
PLANS APPROVAL DATE

REGISTERED PROFESSIONAL ENGINEER JOSUE J. VAGLIENTY No. 70783 Exp. 6-30-13 CIVIL STATE OF CALIFORNIA

THE STATE OF CALIFORNIA OR ITS OFFICERS OR AGENTS SHALL NOT BE RESPONSIBLE FOR THE ACCURACY OR COMPLETENESS OF SCANNED COPIES OF THIS PLAN SHEET.

RBF CONSULTING
14725 ALTON PKWY
IRVINE, CA 92618

OCTA
550 S. MAIN STREET
ORANGE, CA 92863

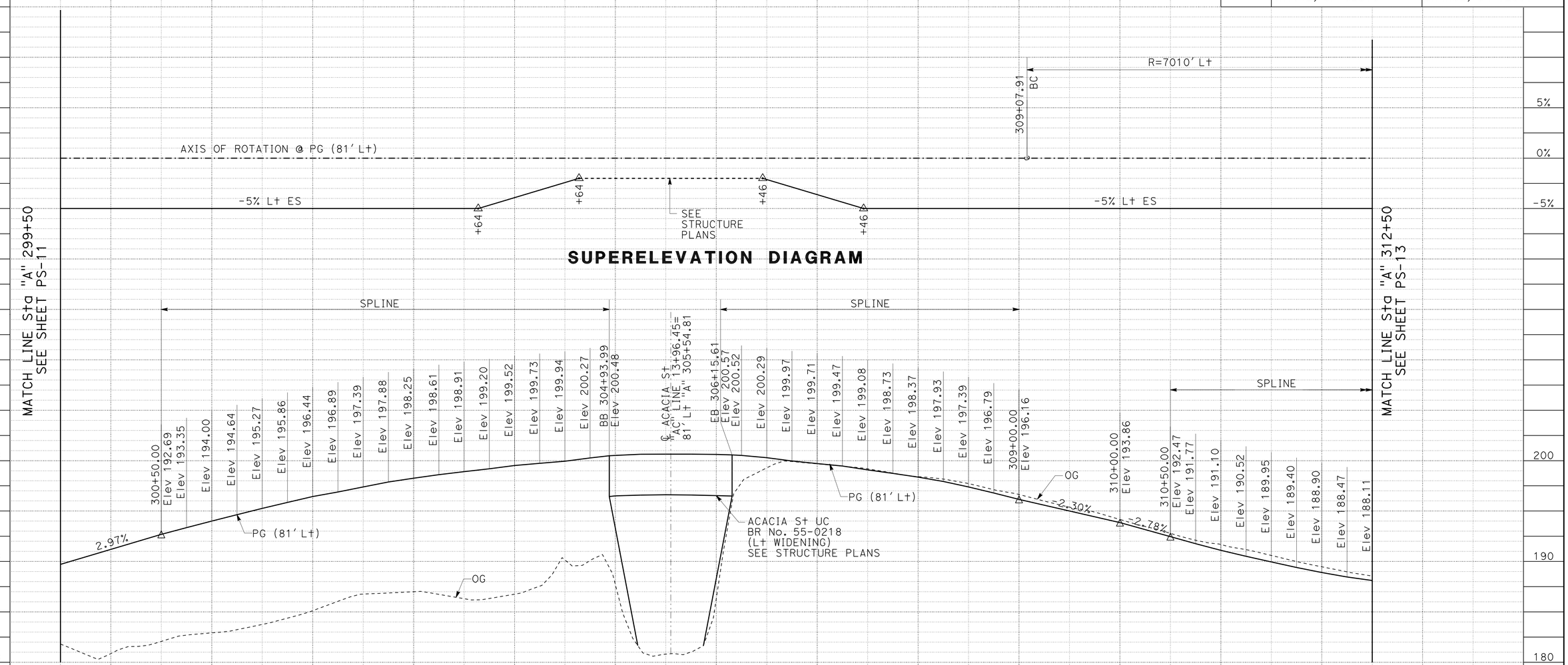

PROFILE

"A" LINE PG
WB ROUTE 91

PROFILE AND SUPERELEVATION DIAGRAM

SCALE: Horiz 1" = 50'
Vert 1" = 5'

PS-12

REVISED BY | DATE REVISED
REBECCA KELCHER | JOSUE VAGLIENTY
CALCULATED-DESIGNED BY | CHECKED BY
CONSULTANT FUNCTIONAL SUPERVISOR
MIKE CHESNEY

STATE OF CALIFORNIA - DEPARTMENT OF TRANSPORTATION
Caltrans

LAST REVISION 06-08-10 | DATE PLOTTED => 13-AUG-2012 | TIME PLOTTED => 14:06

Dist	COUNTY	ROUTE	POST MILES TOTAL PROJECT	SHEET No.	TOTAL SHEETS
12	Ora	91	0.9/5.4	45	885

REGISTERED CIVIL ENGINEER 3/7/12 DATE

8-13-12
PLANS APPROVAL DATE

REGISTERED PROFESSIONAL ENGINEER JOSUE J. VAGLIENTY No. 70783 Exp. 6-30-13 CIVIL STATE OF CALIFORNIA

THE STATE OF CALIFORNIA OR ITS OFFICERS OR AGENTS SHALL NOT BE RESPONSIBLE FOR THE ACCURACY OR COMPLETENESS OF SCANNED COPIES OF THIS PLAN SHEET.

RBF CONSULTING
14725 ALTON PKWY
IRVINE, CA 92618

OCTA
550 S. MAIN STREET
ORANGE, CA 92863

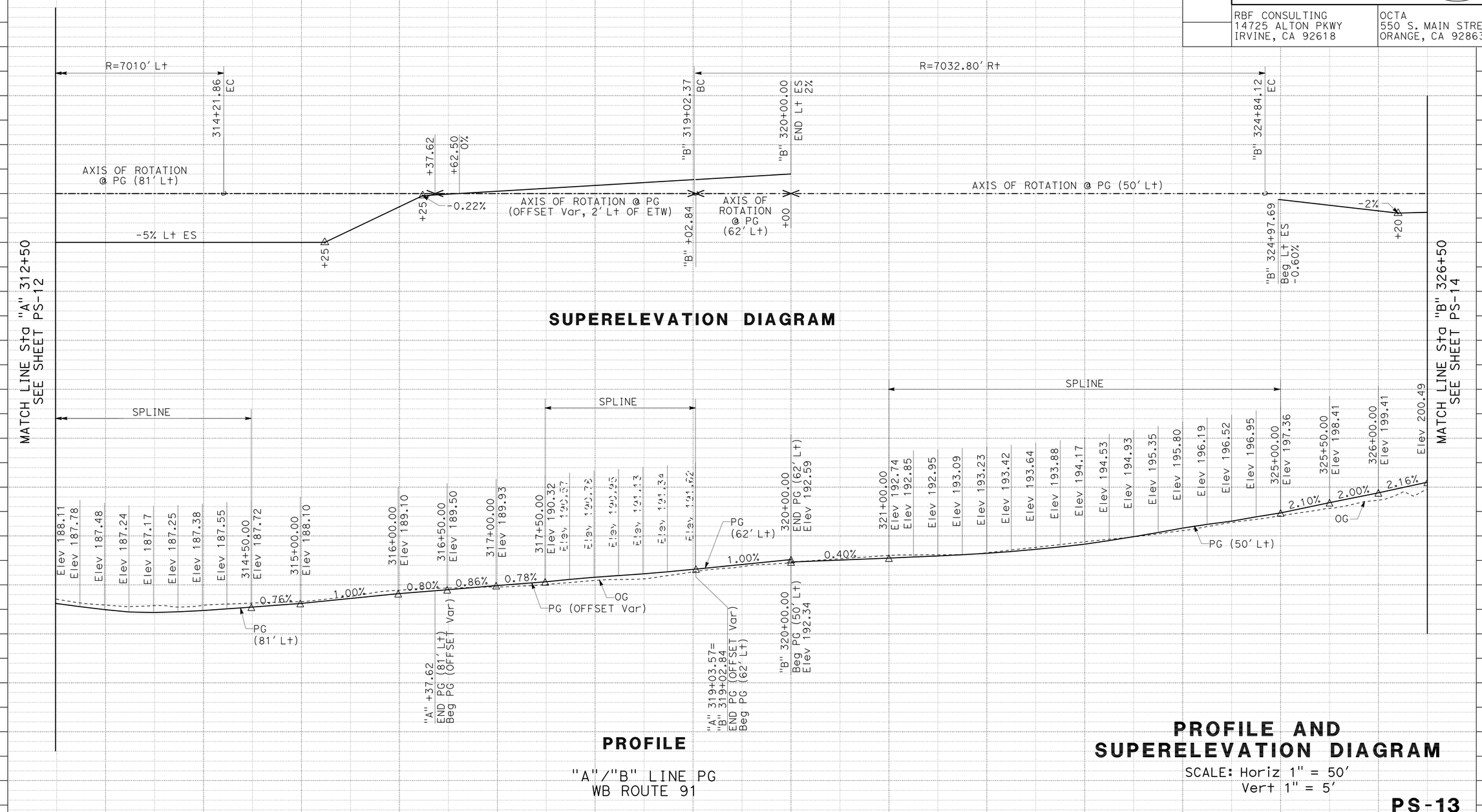

PROFILE AND SUPERELEVATION DIAGRAM

SCALE: Horiz 1" = 50'
Vert 1" = 5'

PS-13

STATE OF CALIFORNIA - DEPARTMENT OF TRANSPORTATION

Caltrans

CONSULTANT FUNCTIONAL SUPERVISOR: MIKE CHESNEY

CALCULATED-DESIGNED BY: JOSUE VAGLIENTY

CHECKED BY: REBECCA KELCHER

REVISED BY

DATE REVISED

LAST REVISION 06-08-10

DATE PLOTTED => 13-AUG-2012
TIME PLOTTED => 14:06

Dist	COUNTY	ROUTE	POST MILES TOTAL PROJECT	SHEET No.	TOTAL SHEETS
12	Ora	91	0.9/5.4	46	885

REGISTERED CIVIL ENGINEER 3/7/12 DATE

8-13-12
PLANS APPROVAL DATE

REGISTERED PROFESSIONAL ENGINEER JOSUE J. VAGLIENTY No. 70783 Exp. 6-30-13 CIVIL STATE OF CALIFORNIA

THE STATE OF CALIFORNIA OR ITS OFFICERS OR AGENTS SHALL NOT BE RESPONSIBLE FOR THE ACCURACY OR COMPLETENESS OF SCANNED COPIES OF THIS PLAN SHEET.

RBF CONSULTING
14725 ALTON PKWY
IRVINE, CA 92618

OCTA
550 S. MAIN STREET
ORANGE, CA 92863

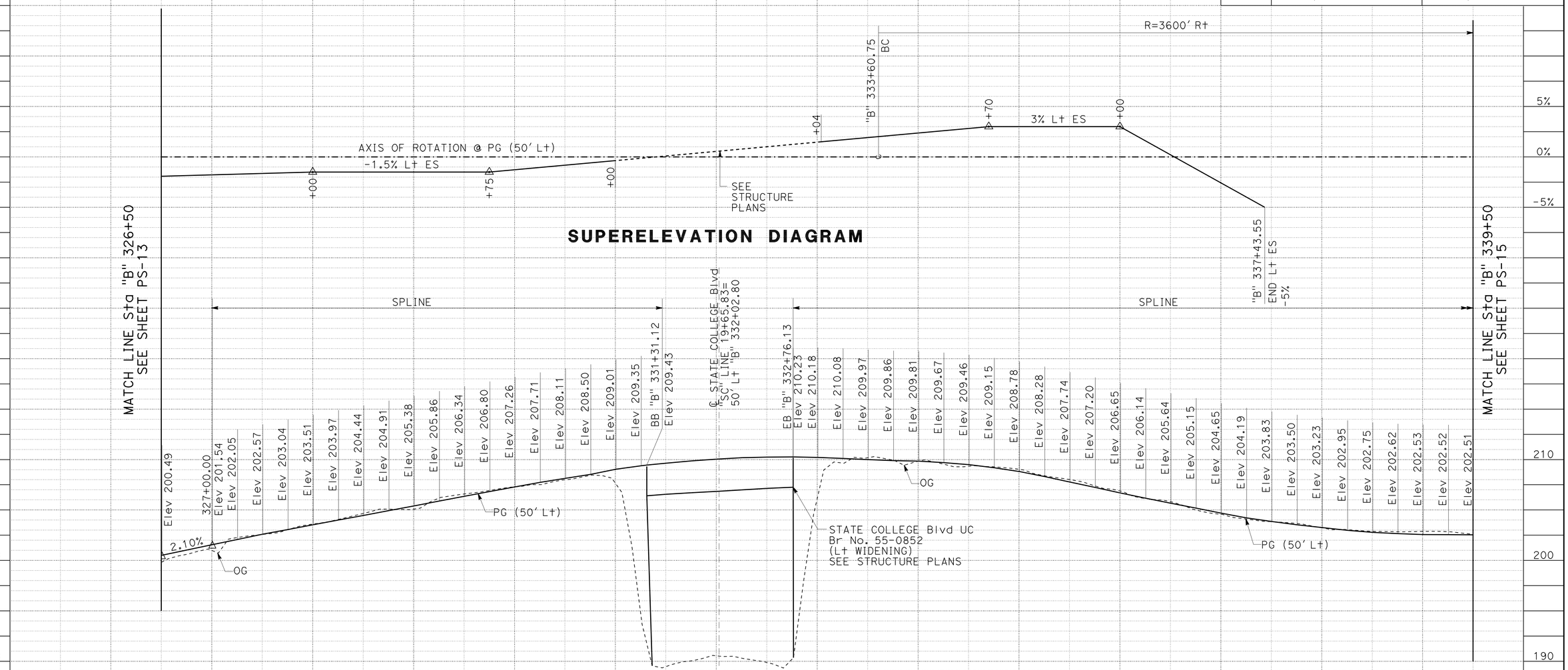

SUPERELEVATION DIAGRAM

PROFILE

"B" LINE PG
WB ROUTE 91

PROFILE AND SUPERELEVATION DIAGRAM

SCALE: Horiz 1" = 50'
Vert 1" = 5'

PS-14

STATE OF CALIFORNIA - DEPARTMENT OF TRANSPORTATION
Caltrans

CONSULTANT FUNCTIONAL SUPERVISOR: MIKE CHESNEY

CALCULATED-DESIGNED BY: REBECCA KELCHER
CHECKED BY: JOSUE VAGLIENTY

REVISED BY
DATE REVISED

LAST REVISION 06-08-10
DATE PLOTTED => 13-AUG-2012
TIME PLOTTED => 14:06

Dist	COUNTY	ROUTE	POST MILES TOTAL PROJECT	SHEET No.	TOTAL SHEETS
12	Ora	91	0.9/5.4	47	885

REGISTERED CIVIL ENGINEER 3/7/12 DATE

8-13-12
PLANS APPROVAL DATE

REGISTERED PROFESSIONAL ENGINEER JOSUE J. VAGLIENTY No. 70783 Exp. 6-30-13 CIVIL STATE OF CALIFORNIA

THE STATE OF CALIFORNIA OR ITS OFFICERS OR AGENTS SHALL NOT BE RESPONSIBLE FOR THE ACCURACY OR COMPLETENESS OF SCANNED COPIES OF THIS PLAN SHEET.

RBF CONSULTING
14725 ALTON PKWY
IRVINE, CA 92618

OCTA
550 S. MAIN STREET
ORANGE, CA 92863

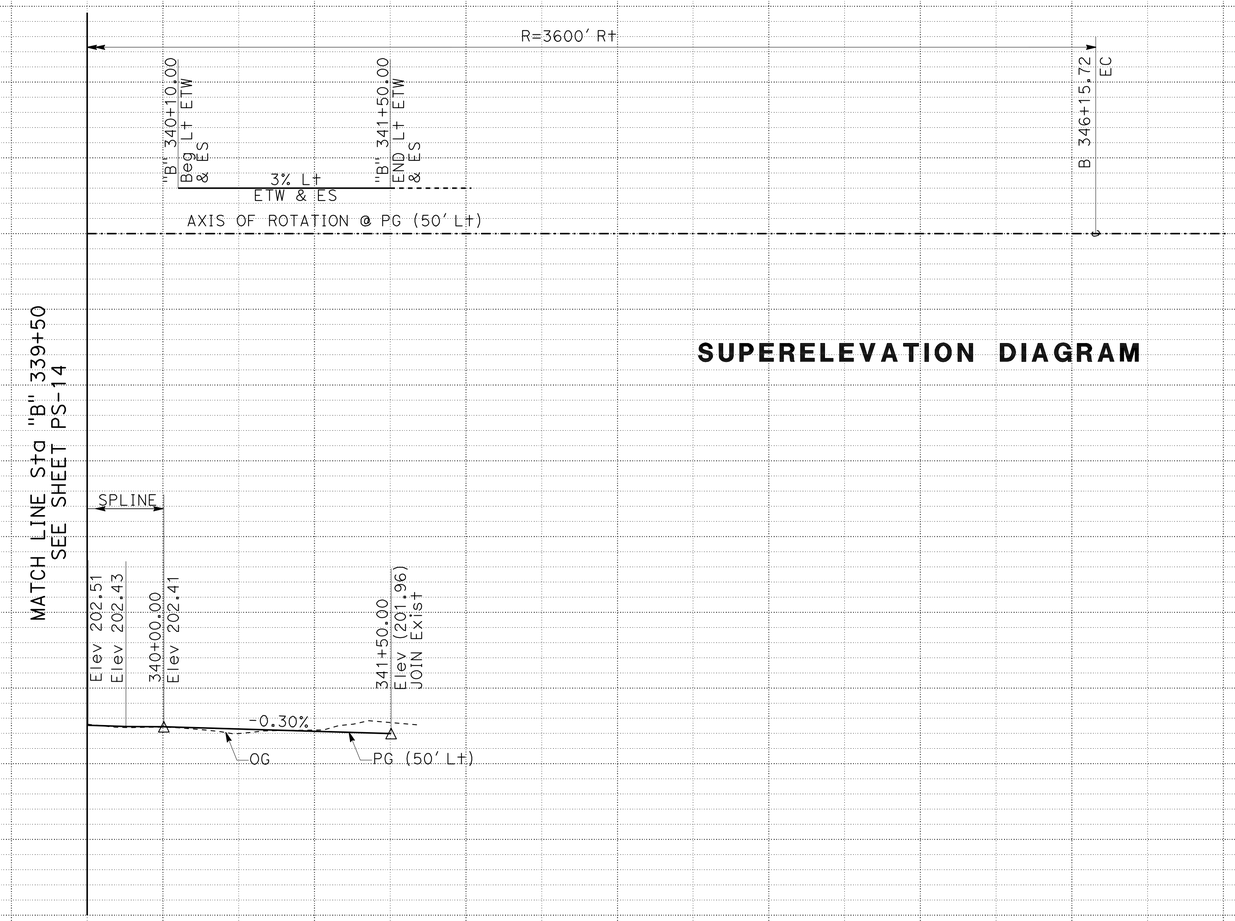

SUPERELEVATION DIAGRAM

PROFILE

"B" LINE PG
WB ROUTE 91

PROFILE AND SUPERELEVATION DIAGRAM

SCALE: Horiz 1" = 50'
Vert 1" = 5'

PS-15

5% 0% -5% 200 190 180

STATION: B 340+00 1 2 3 4 B 345+00 6 7 TOTAL

CY Exc
Emb

REVISED BY | DATE REVISED
REBECCA KELCHER | JOSUE VAGLIENTY
CALCULATED-DESIGNED BY | CHECKED BY
CONSULTANT FUNCTIONAL SUPERVISOR: MIKE CHESNEY
STATE OF CALIFORNIA - DEPARTMENT OF TRANSPORTATION
Caltrans

LAST REVISION 06-08-10
DATE PLOTTED => 13-AUG-2012
TIME PLOTTED => 14:07

Dist	COUNTY	ROUTE	POST MILES TOTAL PROJECT	SHEET No.	TOTAL SHEETS
12	Ora	91	0.9/5.4	48	885

REGISTERED CIVIL ENGINEER 3/7/12 DATE

8-13-12
PLANS APPROVAL DATE

REGISTERED PROFESSIONAL ENGINEER JOSUE J. VAGLIENTY No. 70783 Exp. 6-30-13 CIVIL STATE OF CALIFORNIA

THE STATE OF CALIFORNIA OR ITS OFFICERS OR AGENTS SHALL NOT BE RESPONSIBLE FOR THE ACCURACY OR COMPLETENESS OF SCANNED COPIES OF THIS PLAN SHEET.

RBF CONSULTING
14725 ALTON PKWY
IRVINE, CA 92618

OCTA
550 S. MAIN STREET
ORANGE, CA 92863

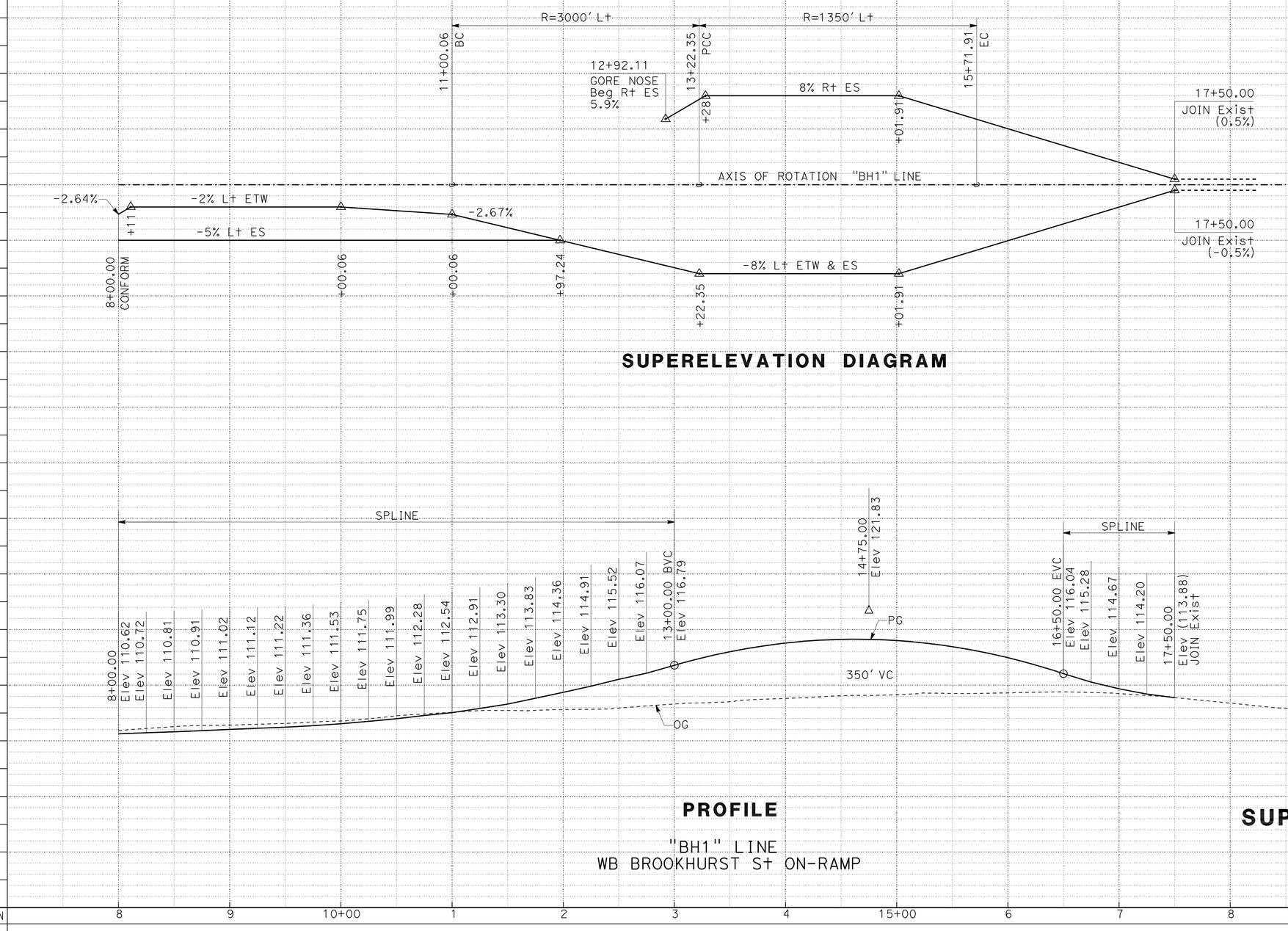

SUPERELEVATION DIAGRAM

PROFILE

"BH1" LINE
WB BROOKHURST St ON-RAMP

PROFILE AND SUPERELEVATION DIAGRAM

SCALE: Horiz 1" = 50'
Vert 1" = 5'

PS-16

REVISED BY | DATE REVISED
REBECCA KELCHER | JOSUE VAGLIENTY
CALCULATED-DESIGNED BY | CHECKED BY
CONSULTANT FUNCTIONAL SUPERVISOR
MIKE CHESNEY

STATE OF CALIFORNIA - DEPARTMENT OF TRANSPORTATION
Caltrans

LAST REVISION 06-08-10
DATE PLOTTED => 13-AUG-2012
TIME PLOTTED => 14:07

Dist	COUNTY	ROUTE	POST MILES TOTAL PROJECT	SHEET No.	TOTAL SHEETS
12	Ora	91	0.9/5.4	49	885

REGISTERED CIVIL ENGINEER 3/7/12 DATE

8-13-12
PLANS APPROVAL DATE

REGISTERED PROFESSIONAL ENGINEER JOSUE J. VAGLIENTY No. 70783 Exp. 6-30-13 CIVIL STATE OF CALIFORNIA

THE STATE OF CALIFORNIA OR ITS OFFICERS OR AGENTS SHALL NOT BE RESPONSIBLE FOR THE ACCURACY OR COMPLETENESS OF SCANNED COPIES OF THIS PLAN SHEET.

RBF CONSULTING
14725 ALTON PKWY
IRVINE, CA 92618

OCTA
550 S. MAIN STREET
ORANGE, CA 92863

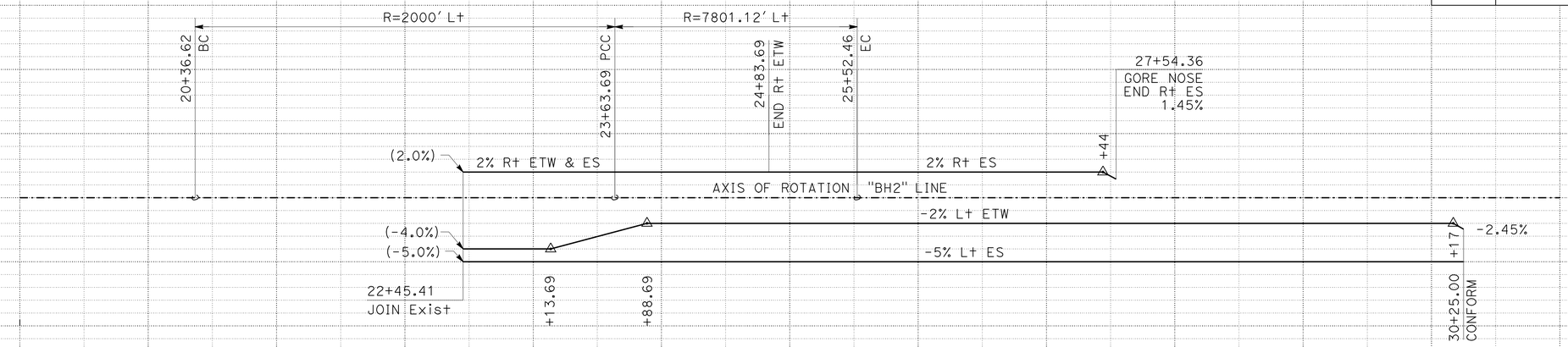

SUPERELEVATION DIAGRAM

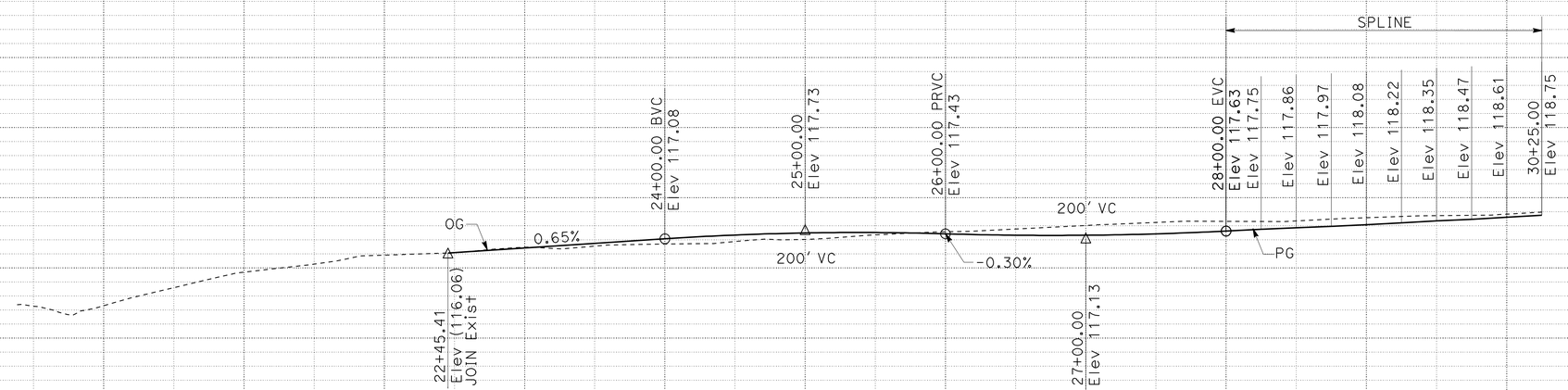

PROFILE

"BH2" LINE
WB BROOKHURST St OFF-RAMP

PROFILE AND SUPERELEVATION DIAGRAM

SCALE: Horiz 1" = 50'
Vert 1" = 5'

PS-17

STATION	9	20+00	1	2	3	4	25+00	6	7	8	9	30+00	1	2	TOTAL
CY Exc															
CY Emb															

STATE OF CALIFORNIA - DEPARTMENT OF TRANSPORTATION
Caltrans

CONSULTANT FUNCTIONAL SUPERVISOR: MIKE CHESNEY
CALCULATED-DESIGNED BY: JOSUE VAGLIENTY
CHECKED BY: REBECCA KELCHER
REVISED BY
DATE REVISED

LAST REVISION 06-08-10
DATE PLOTTED => 13-AUG-2012
TIME PLOTTED => 14:07

Dist	COUNTY	ROUTE	POST MILES TOTAL PROJECT	SHEET No.	TOTAL SHEETS
12	Ora	91	0.9/5.4	50	885

REGISTERED CIVIL ENGINEER 3/7/12 DATE

8-13-12
PLANS APPROVAL DATE

REGISTERED PROFESSIONAL ENGINEER JOSUE J. VAGLIENTY No. 70783 Exp. 6-30-13 CIVIL STATE OF CALIFORNIA

THE STATE OF CALIFORNIA OR ITS OFFICERS OR AGENTS SHALL NOT BE RESPONSIBLE FOR THE ACCURACY OR COMPLETENESS OF SCANNED COPIES OF THIS PLAN SHEET.

RBF CONSULTING
14725 ALTON PKWY
IRVINE, CA 92618

OCTA
550 S. MAIN STREET
ORANGE, CA 92863

REVISED BY | DATE REVISED
REBECCA KELCHER | JOSUE VAGLIENTY
CALCULATED-DESIGNED BY | CHECKED BY
CONSULTANT FUNCTIONAL SUPERVISOR: MIKE CHESNEY

STATE OF CALIFORNIA - DEPARTMENT OF TRANSPORTATION

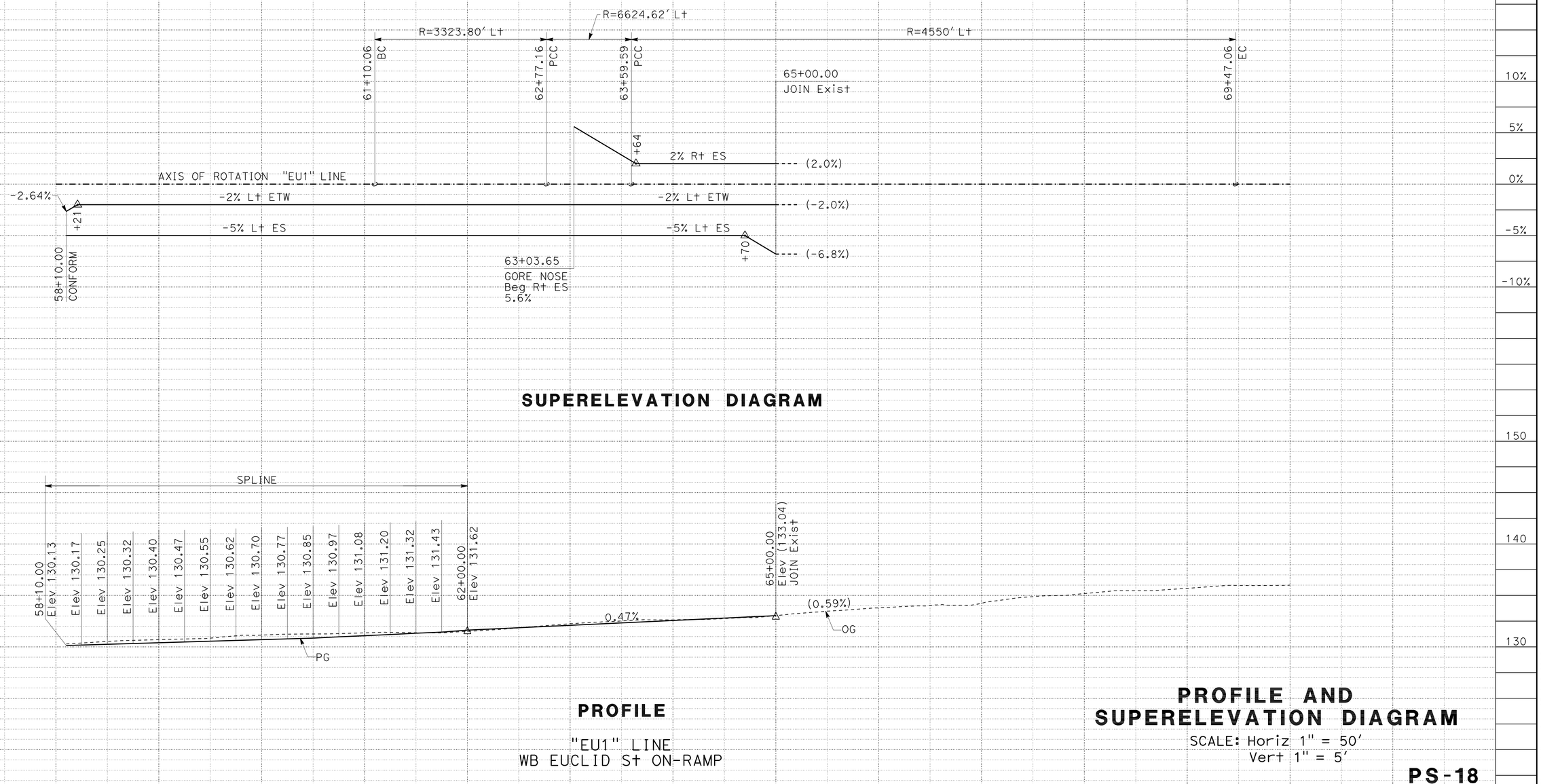

PROFILE AND SUPERELEVATION DIAGRAM

SCALE: Horiz 1" = 50'
Vert 1" = 5'

PS-18

LAST REVISION 06-08-10 | DATE PLOTTED => 13-AUG-2012 | TIME PLOTTED => 14:07

Dist	COUNTY	ROUTE	POST MILES TOTAL PROJECT	SHEET No.	TOTAL SHEETS
12	Ora	91	0.9/5.4	51	885

REGISTERED CIVIL ENGINEER 3/7/12 DATE

8-13-12
PLANS APPROVAL DATE

REGISTERED PROFESSIONAL ENGINEER JOSUE J. VAGLIENTY No. 70783 Exp. 6-30-13 CIVIL STATE OF CALIFORNIA

THE STATE OF CALIFORNIA OR ITS OFFICERS OR AGENTS SHALL NOT BE RESPONSIBLE FOR THE ACCURACY OR COMPLETENESS OF SCANNED COPIES OF THIS PLAN SHEET.

RBF CONSULTING
14725 ALTON PKWY
IRVINE, CA 92618

OCTA
550 S. MAIN STREET
ORANGE, CA 92863

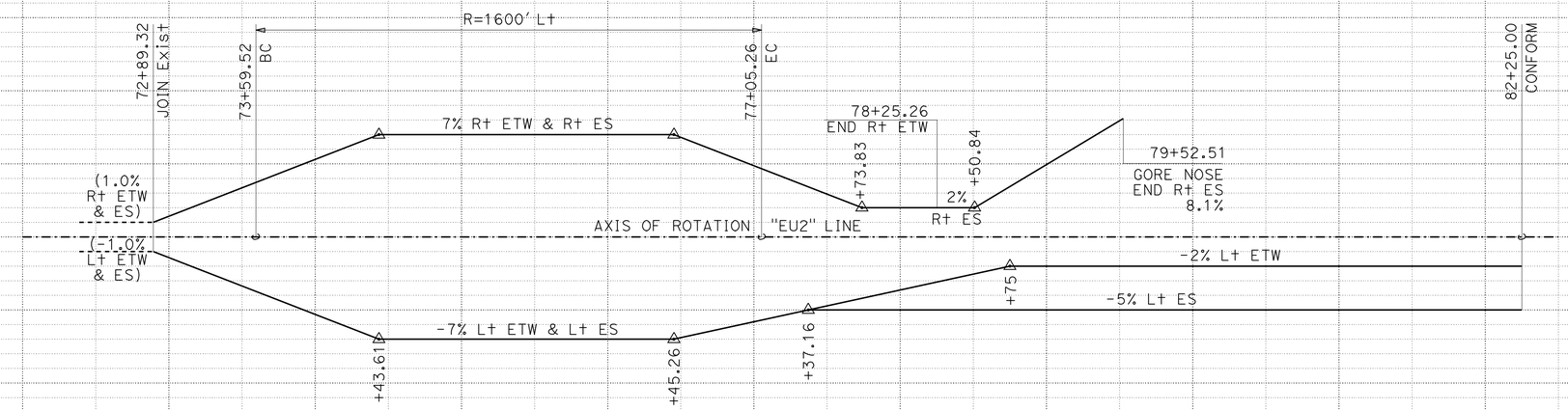

SUPERELEVATION DIAGRAM

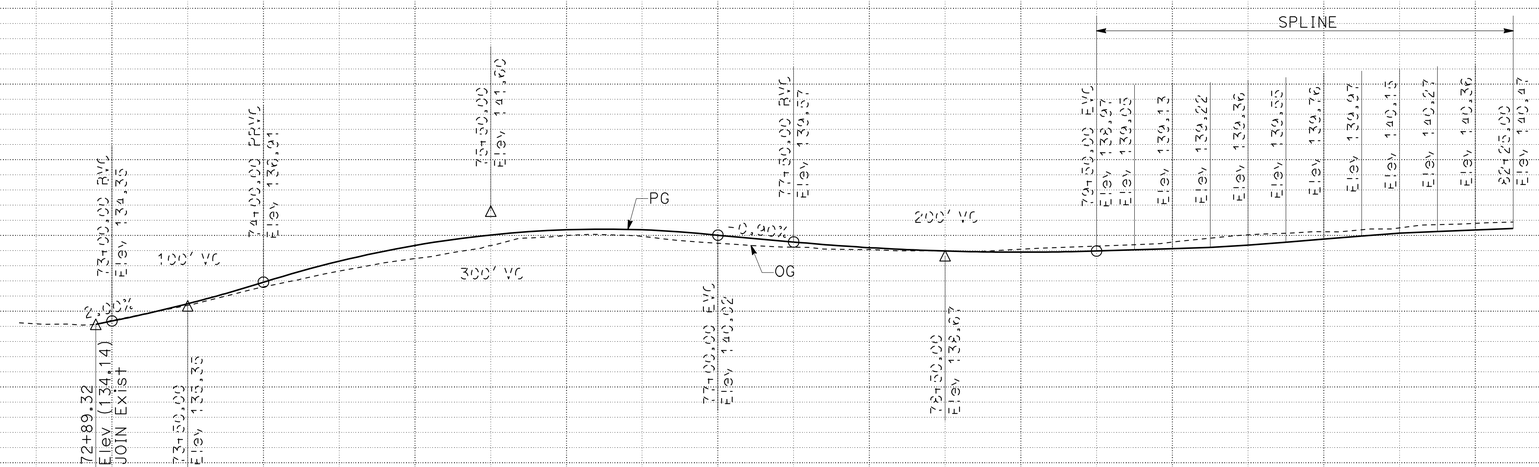

PROFILE

"EU2" LINE
WB EUCLID St OFF-RAMP

PROFILE AND SUPERELEVATION DIAGRAM

SCALE: Horiz 1" = 50'
Vert 1" = 5'

PS-19

STATION	2	3	4	75+00	6	7	8	9	80+00	1	2	TOTAL
CY Exc												
CY Emb												

REVISED BY | DATE REVISED
REBECCA KELCHER | JOSUE VAGLIENTY
CALCULATED-DESIGNED BY | CHECKED BY
CONSULTANT FUNCTIONAL SUPERVISOR: MIKE CHESNEY

STATE OF CALIFORNIA - DEPARTMENT OF TRANSPORTATION
Caltrans

LAST REVISION 06-08-10
DATE PLOTTED => 13-AUG-2012
TIME PLOTTED => 14:07

Dist	COUNTY	ROUTE	POST MILES TOTAL PROJECT	SHEET No.	TOTAL SHEETS
12	Ora	91	0.9/5.4	52	885

REGISTERED CIVIL ENGINEER 3/7/12 DATE

8-13-12
PLANS APPROVAL DATE

REGISTERED PROFESSIONAL ENGINEER JOSUE J. VAGLIENTY No. 70783 Exp. 6-30-13 CIVIL STATE OF CALIFORNIA

THE STATE OF CALIFORNIA OR ITS OFFICERS OR AGENTS SHALL NOT BE RESPONSIBLE FOR THE ACCURACY OR COMPLETENESS OF SCANNED COPIES OF THIS PLAN SHEET.

RBF CONSULTING
14725 ALTON PKWY
IRVINE, CA 92618

OCTA
550 S. MAIN STREET
ORANGE, CA 92863

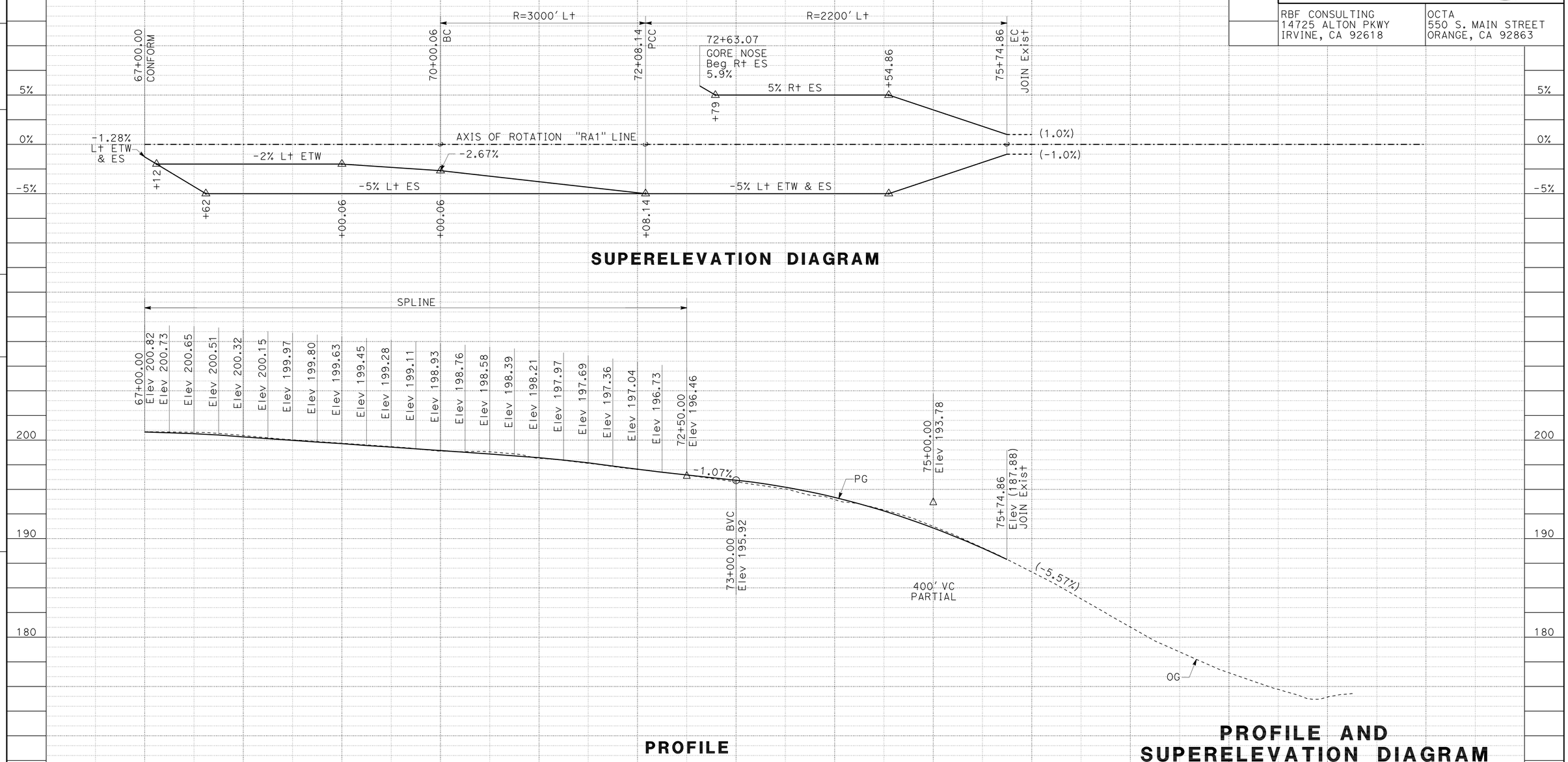

PROFILE AND SUPERELEVATION DIAGRAM

SCALE: Horiz 1" = 50'
Vert 1" = 5'

PS-20

REVISED BY | DATE REVISED
REBECCA KELCHER | JOSUE VAGLIENTY
CALCULATED-DESIGNED BY | CHECKED BY
CONSULTANT FUNCTIONAL SUPERVISOR
MIKE CHESNEY

STATE OF CALIFORNIA - DEPARTMENT OF TRANSPORTATION
Caltrans

LAST REVISION 06-08-10 | DATE PLOTTED => 13-AUG-2012 | TIME PLOTTED => 14:07

Dist	COUNTY	ROUTE	POST MILES TOTAL PROJECT	SHEET No.	TOTAL SHEETS
12	Ora	91	0.9/5.4	53	885

REGISTERED CIVIL ENGINEER 3/7/12 DATE

8-13-12
PLANS APPROVAL DATE

REGISTERED PROFESSIONAL ENGINEER JOSUE J. VAGLIENTY No. 70783 Exp. 6-30-13 CIVIL STATE OF CALIFORNIA

THE STATE OF CALIFORNIA OR ITS OFFICERS OR AGENTS SHALL NOT BE RESPONSIBLE FOR THE ACCURACY OR COMPLETENESS OF SCANNED COPIES OF THIS PLAN SHEET.

RBF CONSULTING
14725 ALTON PKWY
IRVINE, CA 92618

OCTA
550 S. MAIN STREET
ORANGE, CA 92863

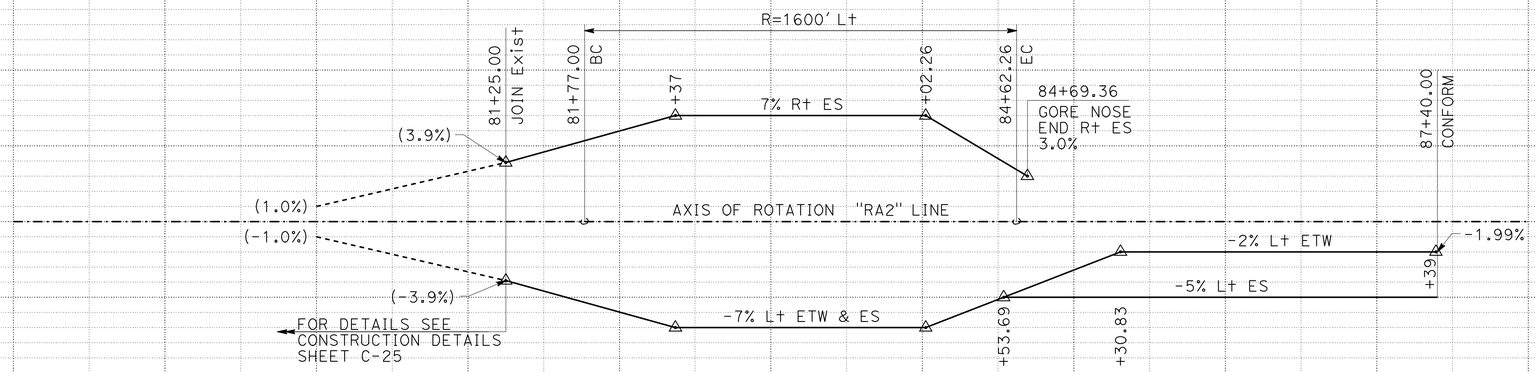

SUPERELEVATION DIAGRAM

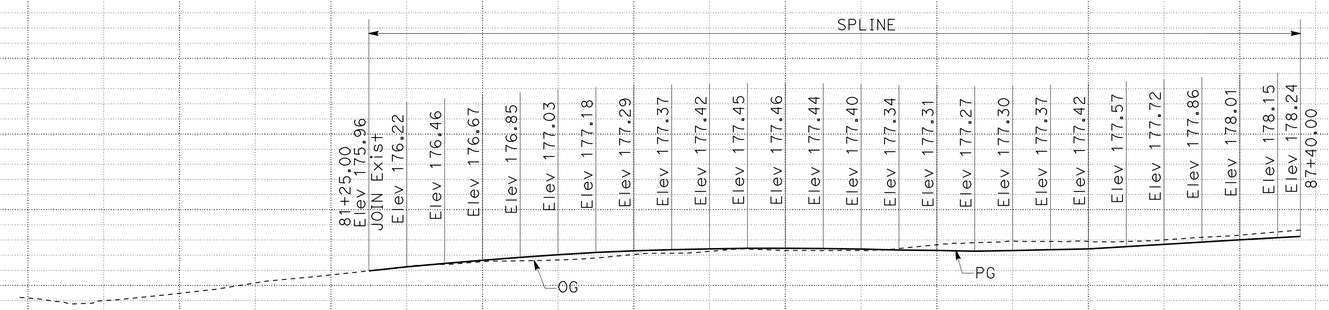

PROFILE

"RA2" LINE
WB RAYMOND Ave OFF-RAMP

PROFILE AND SUPERELEVATION DIAGRAM

SCALE: Horiz 1" = 50'
Vert 1" = 5'

PS-21

STATION	9	80+00	1	2	3	4	85+00	6	7	8	TOTAL
CY Exc											
CY Emb											

STATE OF CALIFORNIA - DEPARTMENT OF TRANSPORTATION
Caltrans

CONSULTANT FUNCTIONAL SUPERVISOR: MIKE CHESNEY
CALCULATED-DESIGNED BY: JOSUE VAGLIENTY
CHECKED BY: REBECCA KELCHER
REVISED BY
DATE REVISED

LAST REVISION 06-08-10
DATE PLOTTED => 13-AUG-2012
TIME PLOTTED => 14:07

Dist	COUNTY	ROUTE	POST MILES TOTAL PROJECT	SHEET No.	TOTAL SHEETS
12	Ora	91	0.9/5.4	54	885

REGISTERED CIVIL ENGINEER 3/7/12 DATE

8-13-12
PLANS APPROVAL DATE

REGISTERED PROFESSIONAL ENGINEER JOSUE J. VAGLIENTY No. 70783 Exp. 6-30-13 CIVIL STATE OF CALIFORNIA

THE STATE OF CALIFORNIA OR ITS OFFICERS OR AGENTS SHALL NOT BE RESPONSIBLE FOR THE ACCURACY OR COMPLETENESS OF SCANNED COPIES OF THIS PLAN SHEET.

RBF CONSULTING
14725 ALTON PKWY
IRVINE, CA 92618

OCTA
550 S. MAIN STREET
ORANGE, CA 92863

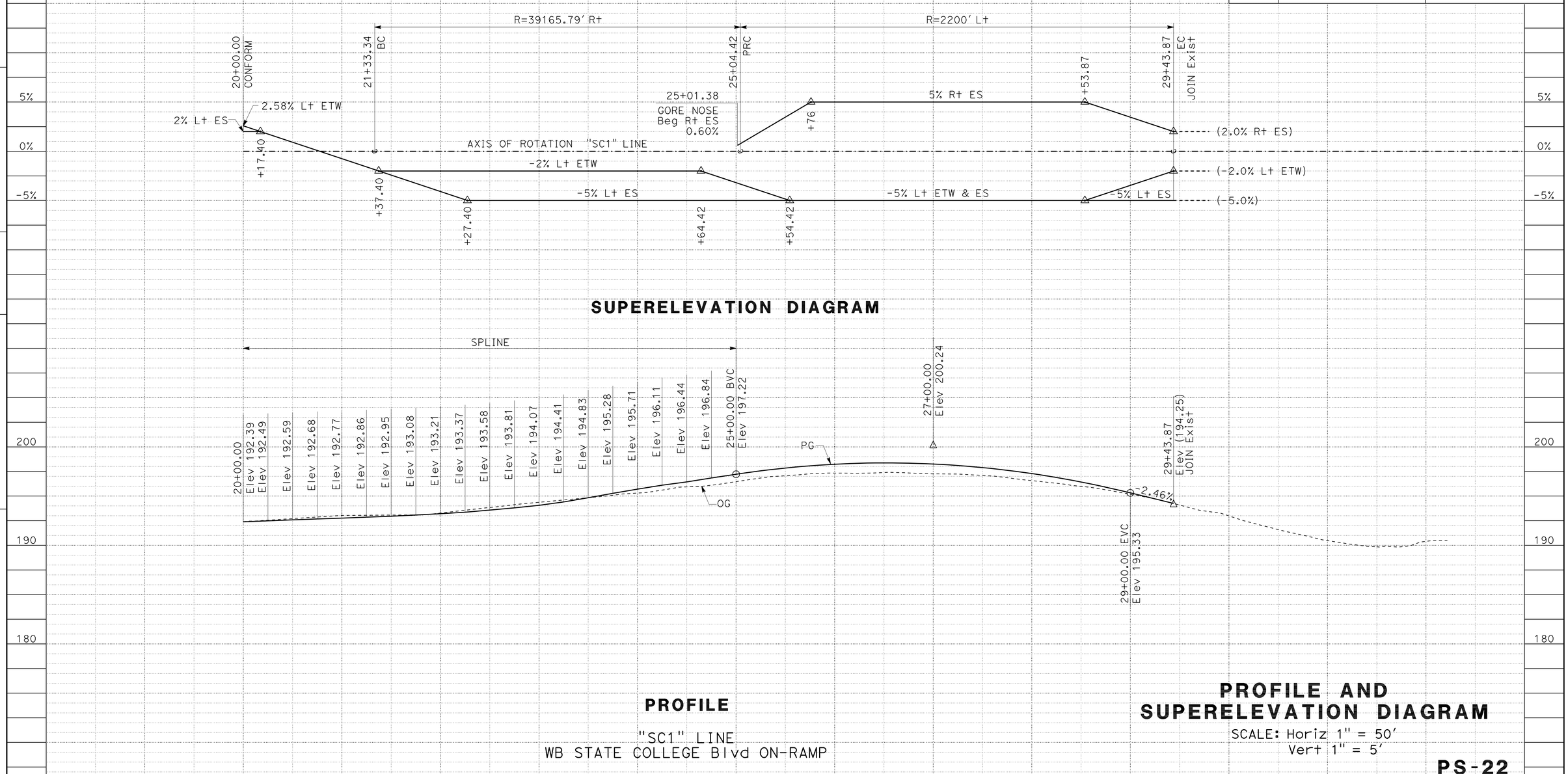

SUPERELEVATION DIAGRAM

PROFILE

"SC1" LINE
WB STATE COLLEGE Blvd ON-RAMP

PROFILE AND SUPERELEVATION DIAGRAM

SCALE: Horiz 1" = 50'
Vert 1" = 5'

PS-22

REVISED BY | DATE REVISED
REBECCA KELCHER | JOSUE VAGLIENTY
CALCULATED-DESIGNED BY | CHECKED BY
CONSULTANT FUNCTIONAL SUPERVISOR | MIKE CHESNEY
STATE OF CALIFORNIA - DEPARTMENT OF TRANSPORTATION
Caltrans

LAST REVISION 06-08-10
DATE PLOTTED => 13-AUG-2012
TIME PLOTTED => 14:07

Dist	COUNTY	ROUTE	POST MILES TOTAL PROJECT	SHEET No.	TOTAL SHEETS
12	Ora	91	0.9/5.4	55	885

REGISTERED CIVIL ENGINEER 3/7/12 DATE

8-13-12
PLANS APPROVAL DATE

REGISTERED PROFESSIONAL ENGINEER JOSUE J. VAGLIENTY No. 70783 Exp. 6-30-13 CIVIL STATE OF CALIFORNIA

THE STATE OF CALIFORNIA OR ITS OFFICERS OR AGENTS SHALL NOT BE RESPONSIBLE FOR THE ACCURACY OR COMPLETENESS OF SCANNED COPIES OF THIS PLAN SHEET.

RBF CONSULTING
14725 ALTON PKWY
IRVINE, CA 92618

OCTA
550 S. MAIN STREET
ORANGE, CA 92863

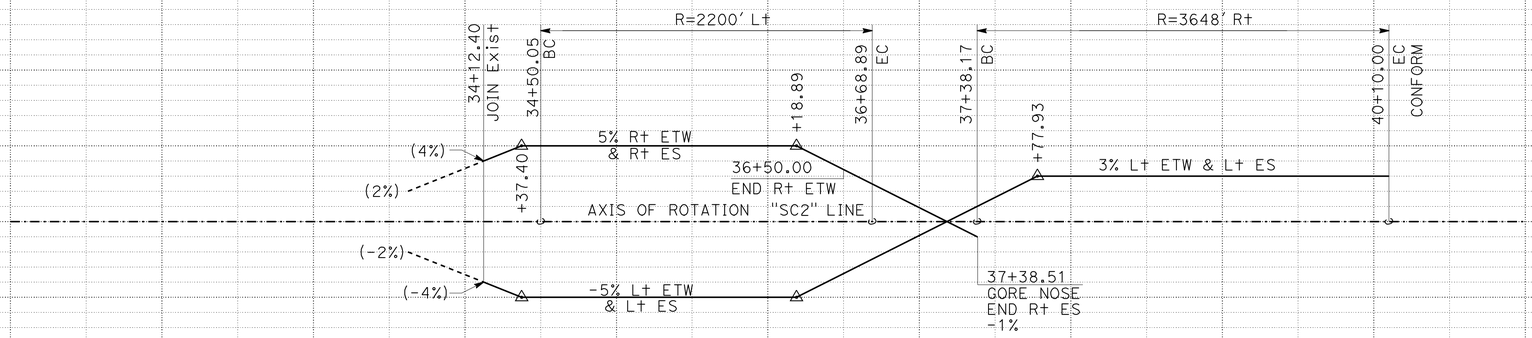

SUPERELEVATION DIAGRAM

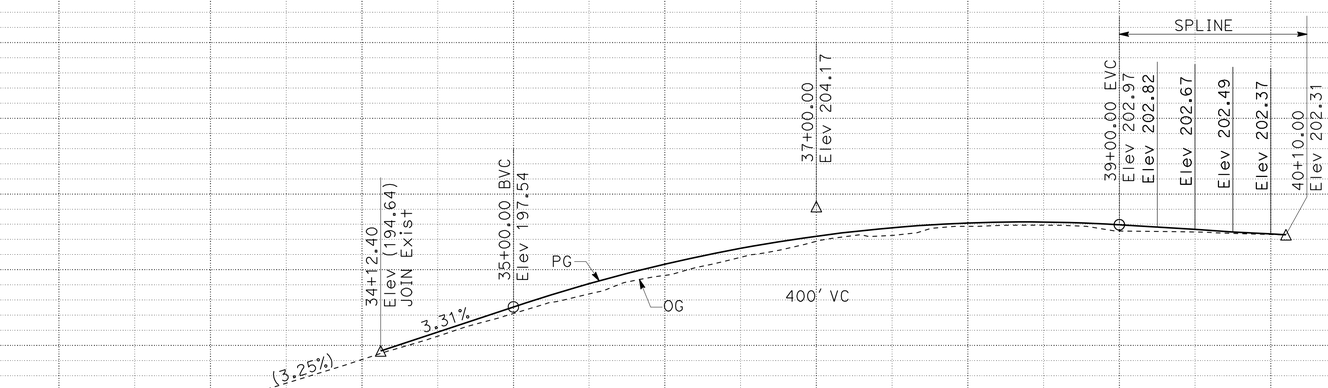

PROFILE

"SC2" LINE
WB STATE COLLEGE Blvd OFF-RAMP

PROFILE AND SUPERELEVATION DIAGRAM

SCALE: Horiz 1" = 50'
Vert 1" = 5'

PS-23

STATION	1	2	3	4	35+00	6	7	8	9	40+00	1	TOTAL
CY Exc												
CY Emb												

REVISED BY | DATE REVISED
REBECCA KELCHER | JOSUE VAGLIENTY
CALCULATED-DESIGNED BY | CHECKED BY
CONSULTANT FUNCTIONAL SUPERVISOR | MIKE CHESNEY
STATE OF CALIFORNIA - DEPARTMENT OF TRANSPORTATION
Caltrans

LAST REVISION 06-08-10
DATE PLOTTED => 13-AUG-2012
TIME PLOTTED => 14:07

Dist	COUNTY	ROUTE	POST MILES TOTAL PROJECT	SHEET No.	TOTAL SHEETS
12	Ora	91	0.9/5.4	56	885

REGISTERED CIVIL ENGINEER 3/7/12 DATE

8-13-12
PLANS APPROVAL DATE

REGISTERED PROFESSIONAL ENGINEER JOSUE J. VAGLIENTY No. 70783 Exp. 6-30-13 CIVIL STATE OF CALIFORNIA

THE STATE OF CALIFORNIA OR ITS OFFICERS OR AGENTS SHALL NOT BE RESPONSIBLE FOR THE ACCURACY OR COMPLETENESS OF SCANNED COPIES OF THIS PLAN SHEET.

RBF CONSULTING
14725 ALTON PKWY
IRVINE, CA 92618

OCTA
550 S. MAIN STREET
ORANGE, CA 92863

NOTE:
1. FOR ACCURATE RIGHT OF WAY DATA, CONTACT RIGHT OF WAY ENGINEERING AT THE DISTRICT OFFICE.

No.	REMOVAL ITEMS	UNITS	No.	REMOVAL ITEMS	UNITS
1	REMOVE METAL BEAM GUARD RAILING	LF	9	REMOVE CONCRETE (MISCELLANEOUS)	CY
2	REMOVE CHAIN LINK FENCE	LF	10	REMOVE GATE	EA
3	REMOVE RETAINING WALL	CY	11	NOT USED	
4	REMOVE SOUND WALL	SQFT	12	REMOVE ROCK BLANKET	CY
5	REMOVE CONCRETE PAVEMENT	SQYD	13	REMOVE CONCRETE BARRIER	LF
6	REMOVE CONCRETE CURB	LF	14	NOT USED	
7	REMOVE CONCRETE SIDEWALK	SQYD	15	REMOVE OVERSIDE DRAIN	EA
8	REMOVE CONCRETE (CHANNEL)	CY	16	NOT USED	

LEGEND: SHEET C-1 THROUGH C-17

- REMOVE CONCRETE PAVEMENT
- REMOVE CONCRETE (MISCELLANEOUS)
- REMOVE CONCRETE CHANNEL
- REMOVE CONCRETE SIDEWALK
- REMOVE ROCK BLANKET
- (X) REMOVAL ITEM CODE

ABBREVIATIONS:

CAPM	CAPITAL PREVENTIVE MAINTENANCE
BOW	BACK OF WALL

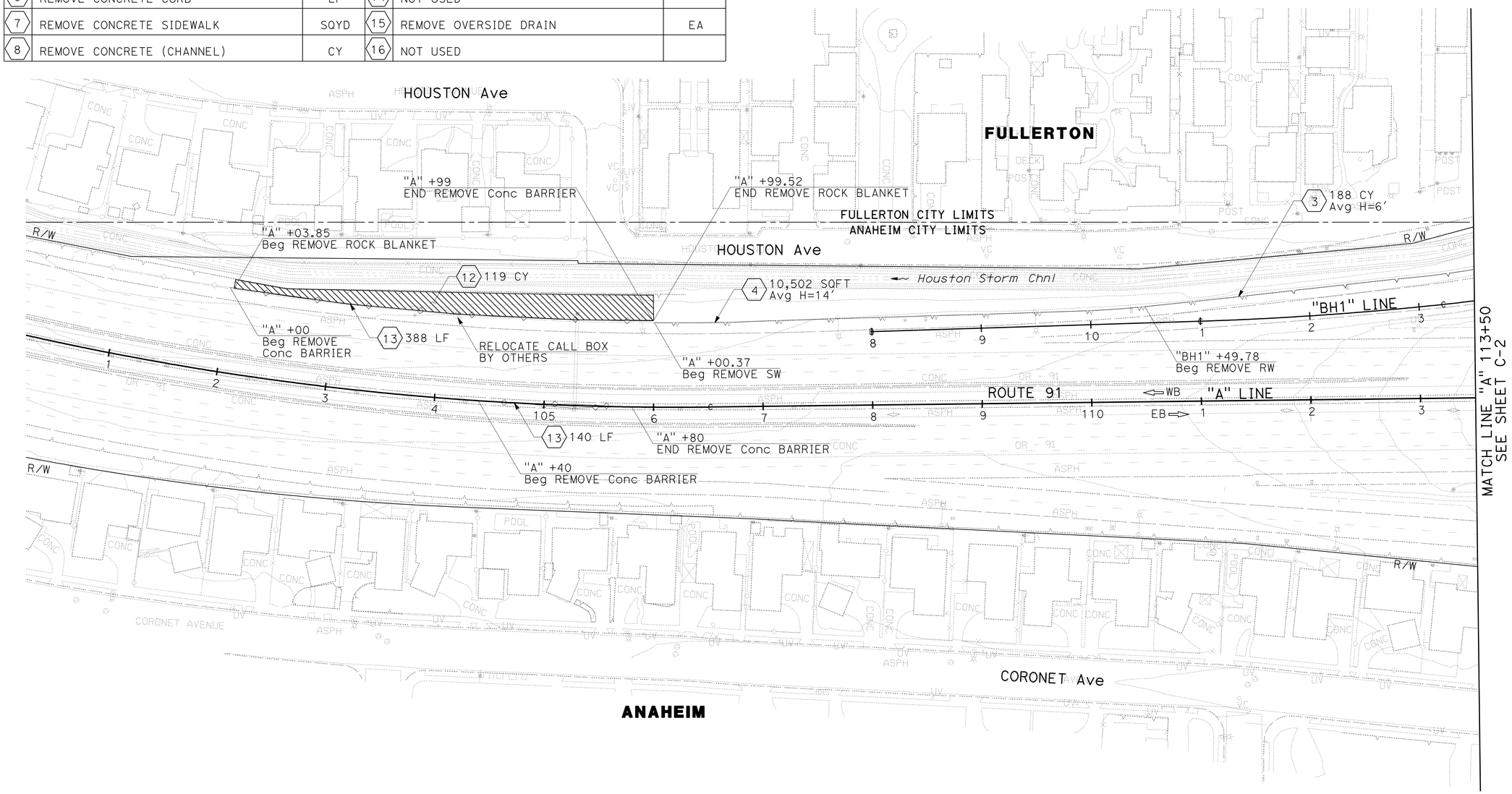

CONSTRUCTION DETAILS
(REMOVAL PLAN)
SCALE: 1" = 50'

C-1

STATE OF CALIFORNIA - DEPARTMENT OF TRANSPORTATION
Caltrans

CONSULTANT FUNCTIONAL SUPERVISOR: MIKE CHESNEY
CALCULATED-DESIGNED BY: STEVEN NGUYEN
CHECKED BY: JOSUE VAGLIENTY
REVISED BY
DATE REVISED

LAST REVISION 06-08-10
DATE PLOTTED => 13-AUG-2012
TIME PLOTTED => 14:07

NOTE:
1. FOR ACCURATE RIGHT OF WAY DATA, CONTACT RIGHT OF WAY ENGINEERING AT THE DISTRICT OFFICE.

Dist	COUNTY	ROUTE	POST MILES TOTAL PROJECT	SHEET No.	TOTAL SHEETS
12	Ora	91	0.9/5.4	57	885

REGISTERED CIVIL ENGINEER 3/7/12 DATE

8-13-12
PLANS APPROVAL DATE

REGISTERED PROFESSIONAL ENGINEER JOSUE J. VAGLIENTY No. 70783 Exp. 6-30-13 CIVIL STATE OF CALIFORNIA

THE STATE OF CALIFORNIA OR ITS OFFICERS OR AGENTS SHALL NOT BE RESPONSIBLE FOR THE ACCURACY OR COMPLETENESS OF SCANNED COPIES OF THIS PLAN SHEET.

RBF CONSULTING
14725 ALTON PKWY
IRVINE, CA 92618

OCTA
550 S. MAIN STREET
ORANGE, CA 92863

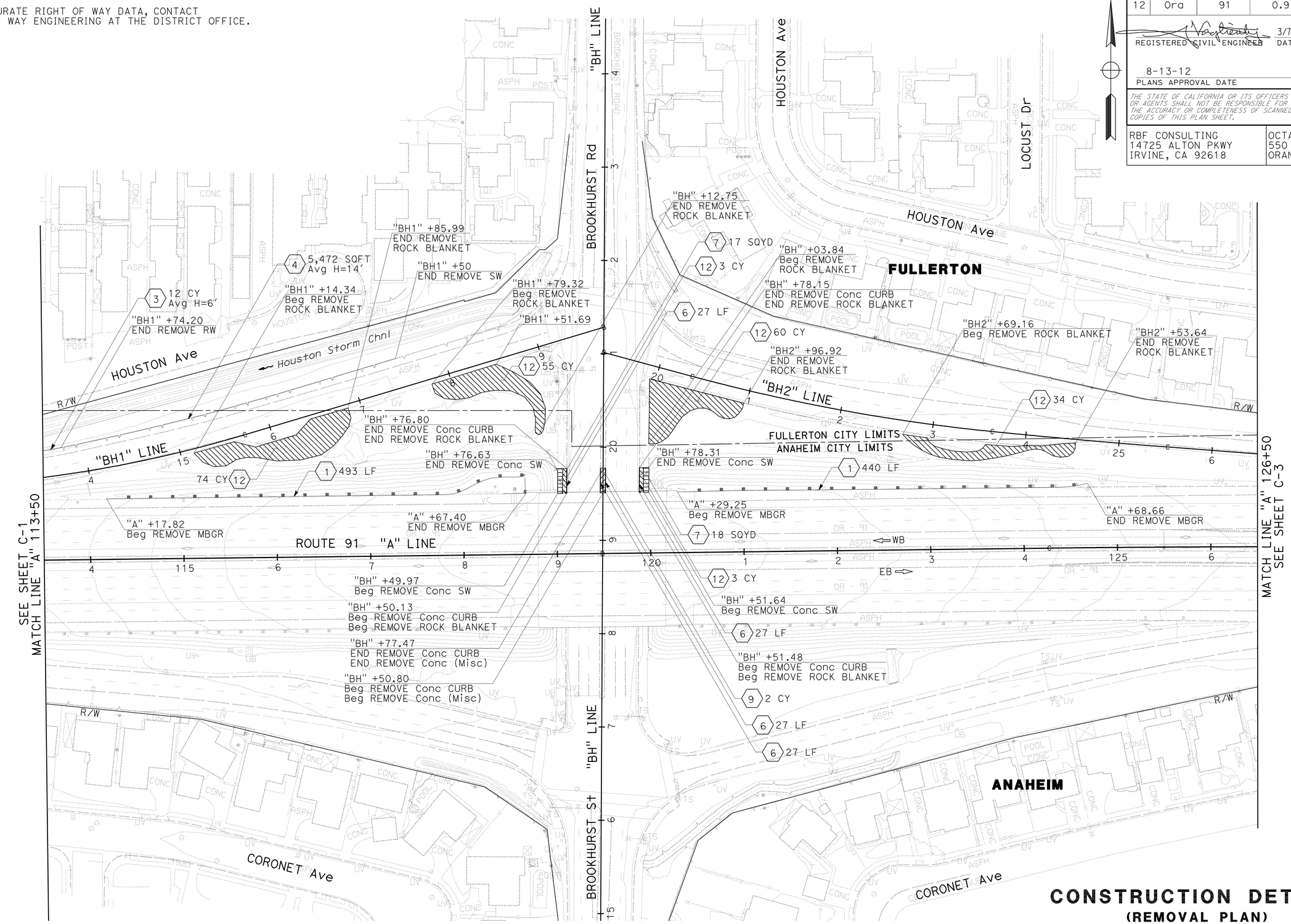

CONSTRUCTION DETAILS
(REMOVAL PLAN)
SCALE: 1" = 50'

C-2

STATE OF CALIFORNIA - DEPARTMENT OF TRANSPORTATION
Caltrans
CONSULTANT FUNCTIONAL SUPERVISOR: MIKE CHESNEY
CALCULATED-DESIGNED BY: STEVEN NGUYEN
CHECKED BY: JOSUE VAGLIENTY
REVISED BY
DATE REVISED

LAST REVISION 06-08-10
DATE PLOTTED => 13-AUG-2012
TIME PLOTTED => 14:08

NOTE:
1. FOR ACCURATE RIGHT OF WAY DATA, CONTACT RIGHT OF WAY ENGINEERING AT THE DISTRICT OFFICE.

Dist	COUNTY	ROUTE	POST MILES TOTAL PROJECT	SHEET No.	TOTAL SHEETS
12	Ora	91	0.9/5.4	58	885

REGISTERED CIVIL ENGINEER 3/7/12 DATE

8-13-12
PLANS APPROVAL DATE

REGISTERED PROFESSIONAL ENGINEER JOSUE J. VAGLIENTY No. 70783 Exp. 6-30-13 CIVIL STATE OF CALIFORNIA

THE STATE OF CALIFORNIA OR ITS OFFICERS OR AGENTS SHALL NOT BE RESPONSIBLE FOR THE ACCURACY OR COMPLETENESS OF SCANNED COPIES OF THIS PLAN SHEET.

RBF CONSULTING
14725 ALTON PKWY
IRVINE, CA 92618

OCTA
550 S. MAIN STREET
ORANGE, CA 92863

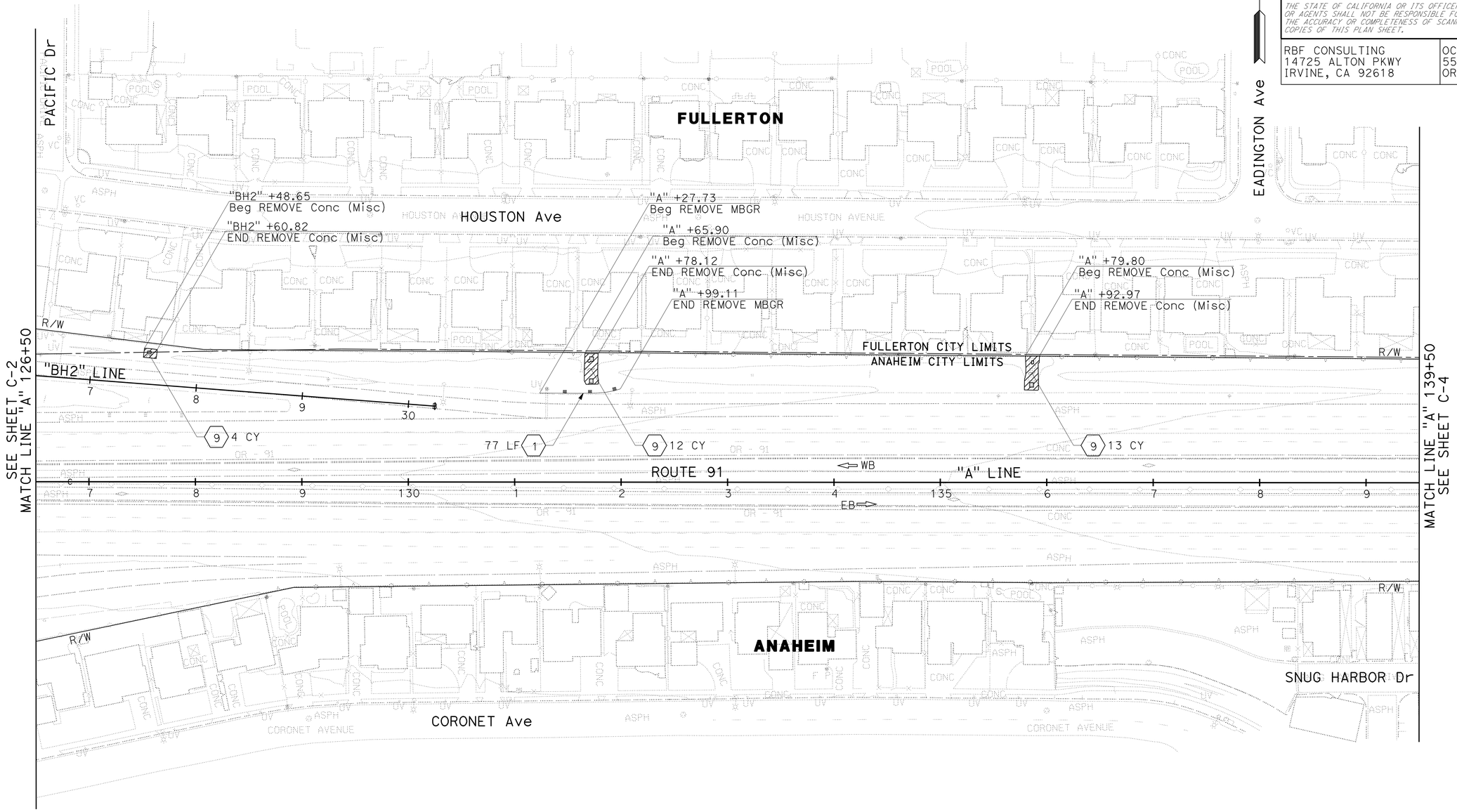

CONSTRUCTION DETAILS
(REMOVAL PLAN)
SCALE: 1" = 50'

C-3

STATE OF CALIFORNIA - DEPARTMENT OF TRANSPORTATION
Caltrans

CONSULTANT FUNCTIONAL SUPERVISOR: MIKE CHESNEY
CALCULATED-DESIGNED BY: STEVEN NGUYEN
CHECKED BY: JOSUE VAGLIENTY
REVISED BY
DATE REVISED

LAST REVISION 06-08-10
DATE PLOTTED => 13-AUG-2012
TIME PLOTTED => 14:08

NOTE:
1. FOR ACCURATE RIGHT OF WAY DATA, CONTACT RIGHT OF WAY ENGINEERING AT THE DISTRICT OFFICE.

Dist	COUNTY	ROUTE	POST MILES TOTAL PROJECT	SHEET No.	TOTAL SHEETS
12	Ora	91	0.9/5.4	59	885

REGISTERED CIVIL ENGINEER 3/7/12 DATE

8-13-12
PLANS APPROVAL DATE

REGISTERED PROFESSIONAL ENGINEER JOSUE J. VAGLIENTY No. 70783 Exp. 6-30-13 CIVIL STATE OF CALIFORNIA

THE STATE OF CALIFORNIA OR ITS OFFICERS OR AGENTS SHALL NOT BE RESPONSIBLE FOR THE ACCURACY OR COMPLETENESS OF SCANNED COPIES OF THIS PLAN SHEET.

RBF CONSULTING
14725 ALTON PKWY
IRVINE, CA 92618

OCTA
550 S. MAIN STREET
ORANGE, CA 92863

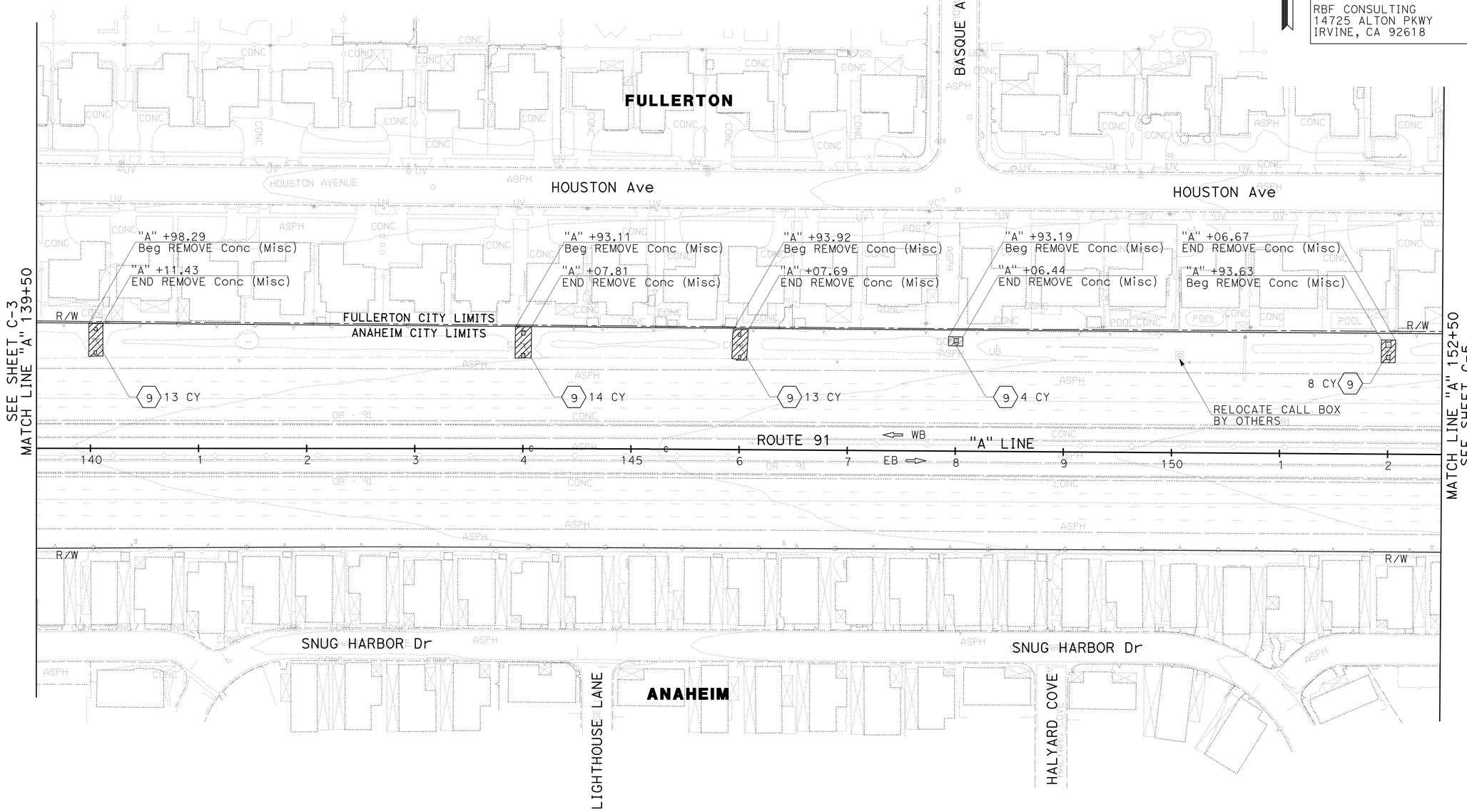

CONSTRUCTION DETAILS
(REMOVAL PLAN)
SCALE: 1" = 50'

C-4

STATE OF CALIFORNIA - DEPARTMENT OF TRANSPORTATION
Caltrans

CONSULTANT FUNCTIONAL SUPERVISOR: MIKE CHESNEY
CALCULATED-DESIGNED BY: STEVEN NGUYEN
CHECKED BY: JOSUE VAGLIENTY
REVISED BY
DATE REVISED

LAST REVISION 06-08-10
DATE PLOTTED => 13-AUG-2012
TIME PLOTTED => 14:08

NOTE:
1. FOR ACCURATE RIGHT OF WAY DATA, CONTACT RIGHT OF WAY ENGINEERING AT THE DISTRICT OFFICE.

Dist	COUNTY	ROUTE	POST MILES TOTAL PROJECT	SHEET No.	TOTAL SHEETS
12	Ora	91	0.9/5.4	60	885

REGISTERED CIVIL ENGINEER 3/7/12 DATE

8-13-12
PLANS APPROVAL DATE

REGISTERED PROFESSIONAL ENGINEER JOSUE J. VAGLIENTY No. 70783 Exp. 6-30-13 CIVIL STATE OF CALIFORNIA

THE STATE OF CALIFORNIA OR ITS OFFICERS OR AGENTS SHALL NOT BE RESPONSIBLE FOR THE ACCURACY OR COMPLETENESS OF SCANNED COPIES OF THIS PLAN SHEET.

RBF CONSULTING
14725 ALTON PKWY
IRVINE, CA 92618

OCTA
550 S. MAIN STREET
ORANGE, CA 92863

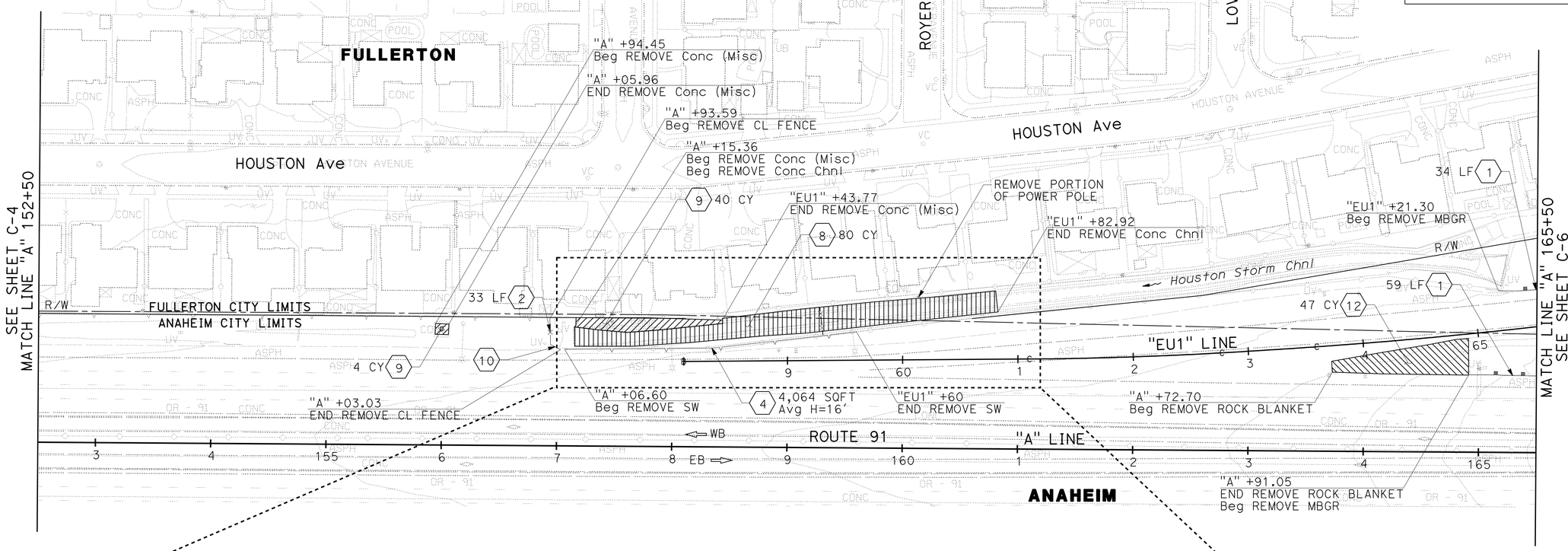

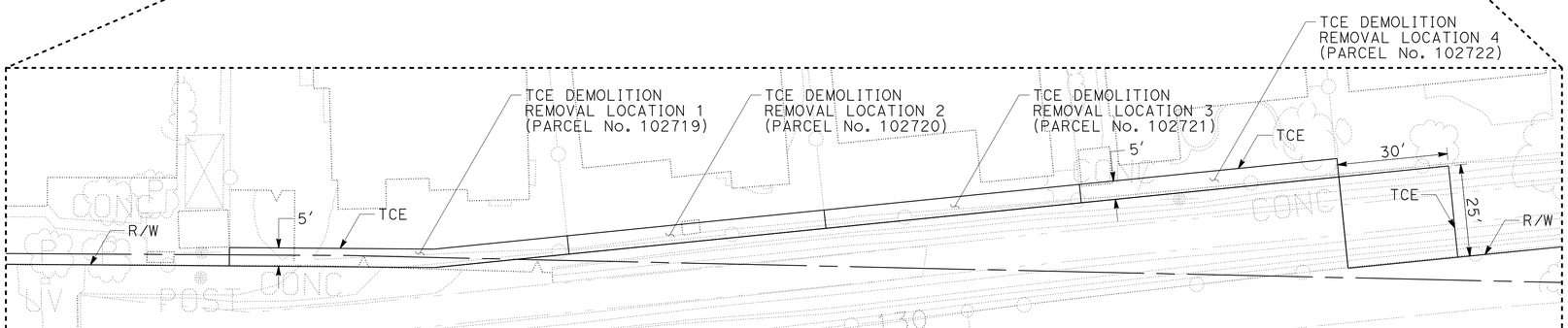

DETAIL
SCALE: 1"=20'

CONSTRUCTION DETAILS
(REMOVAL PLAN)
SCALE: 1" = 50'

C-5

STATE OF CALIFORNIA - DEPARTMENT OF TRANSPORTATION
Caltrans

CONSULTANT FUNCTIONAL SUPERVISOR: MIKE CHESNEY
CALCULATED-DESIGNED BY: STEVEN NGUYEN
CHECKED BY: JOSUE VAGLIENTY
REVISED BY
DATE REVISED

LAST REVISION 06-08-10
DATE PLOTTED => 13-AUG-2012
TIME PLOTTED => 14:08

NOTE:
1. FOR ACCURATE RIGHT OF WAY DATA, CONTACT RIGHT OF WAY ENGINEERING AT THE DISTRICT OFFICE.

Dist	COUNTY	ROUTE	POST MILES TOTAL PROJECT	SHEET No.	TOTAL SHEETS
12	Ora	91	0.9/5.4	61	885

REGISTERED CIVIL ENGINEER 3/7/12 DATE

8-13-12
PLANS APPROVAL DATE

REGISTERED PROFESSIONAL ENGINEER JOSUE J. VAGLIENTY No. 70783 Exp. 6-30-13 CIVIL STATE OF CALIFORNIA

THE STATE OF CALIFORNIA OR ITS OFFICERS OR AGENTS SHALL NOT BE RESPONSIBLE FOR THE ACCURACY OR COMPLETENESS OF SCANNED COPIES OF THIS PLAN SHEET.

RBF CONSULTING
14725 ALTON PKWY
IRVINE, CA 92618

OCTA
550 S. MAIN STREET
ORANGE, CA 92863

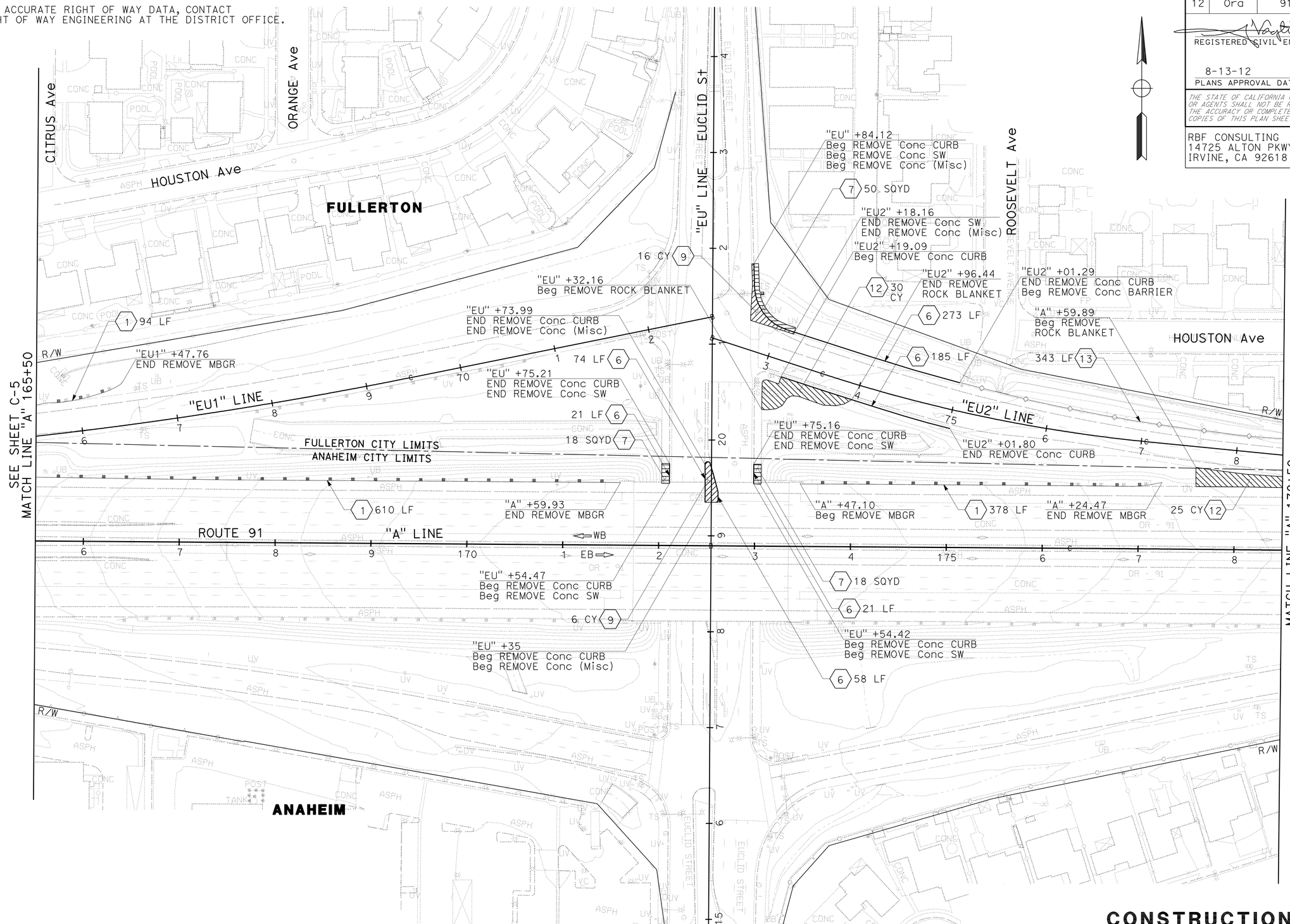

CONSTRUCTION DETAILS
(REMOVAL PLAN)
SCALE: 1" = 50'

C-6

STATE OF CALIFORNIA - DEPARTMENT OF TRANSPORTATION
Caltrans

CONSULTANT FUNCTIONAL SUPERVISOR: MIKE CHESNEY
CALCULATED-DESIGNED BY: STEVEN NGUYEN
CHECKED BY: JOSUE VAGLIENTY
REVISED BY
DATE REVISED

LAST REVISION | DATE PLOTTED => 13-AUG-2012
06-08-10 | TIME PLOTTED => 14:08

NOTE:
1. FOR ACCURATE RIGHT OF WAY DATA, CONTACT RIGHT OF WAY ENGINEERING AT THE DISTRICT OFFICE.

Dist	COUNTY	ROUTE	POST MILES TOTAL PROJECT	SHEET No.	TOTAL SHEETS
12	Ora	91	0.9/5.4	62	885

REGISTERED CIVIL ENGINEER 3/7/12 DATE

8-13-12
PLANS APPROVAL DATE

REGISTERED PROFESSIONAL ENGINEER JOSUE J. VAGLIENTY No. 70783 Exp. 6-30-13 CIVIL STATE OF CALIFORNIA

THE STATE OF CALIFORNIA OR ITS OFFICERS OR AGENTS SHALL NOT BE RESPONSIBLE FOR THE ACCURACY OR COMPLETENESS OF SCANNED COPIES OF THIS PLAN SHEET.

RBF CONSULTING
14725 ALTON PKWY
IRVINE, CA 92618

OCTA
550 S. MAIN STREET
ORANGE, CA 92863

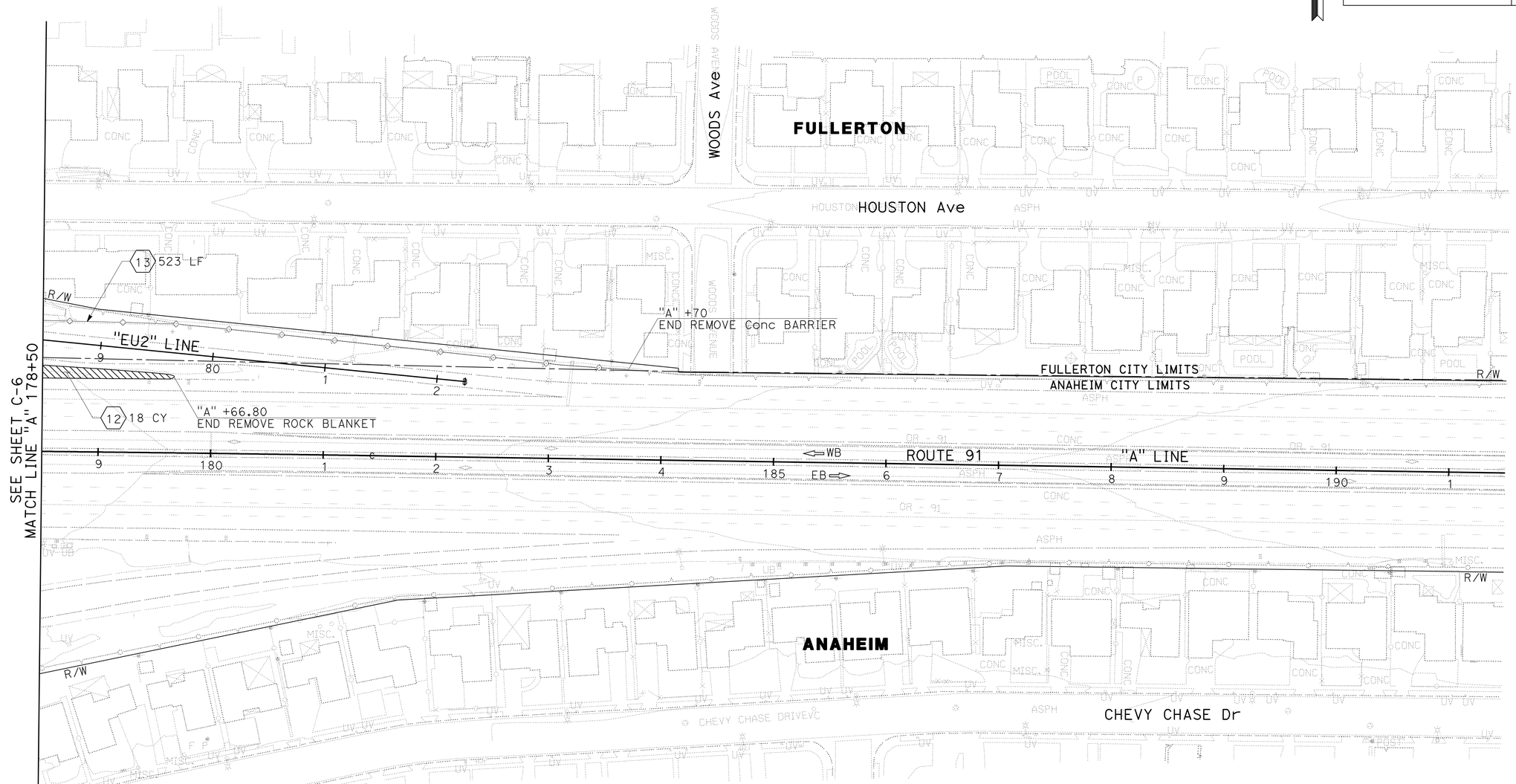

CONSTRUCTION DETAILS
(REMOVAL PLAN)
SCALE: 1" = 50'

C-7

STATE OF CALIFORNIA - DEPARTMENT OF TRANSPORTATION
Caltrans

CONSULTANT FUNCTIONAL SUPERVISOR: MIKE CHESNEY
CALCULATED-DESIGNED BY: STEVEN NGUYEN
CHECKED BY: JOSUE VAGLIENTY
REVISED BY
DATE REVISED

LAST REVISION 06-08-10
DATE PLOTTED => 13-AUG-2012
TIME PLOTTED => 14:08

NOTE:
1. FOR ACCURATE RIGHT OF WAY DATA, CONTACT RIGHT OF WAY ENGINEERING AT THE DISTRICT OFFICE.

Dist	COUNTY	ROUTE	POST MILES TOTAL PROJECT	SHEET No.	TOTAL SHEETS
12	Ora	91	0.9/5.4	63	885

REGISTERED CIVIL ENGINEER 3/7/12 DATE

8-13-12
PLANS APPROVAL DATE

REGISTERED PROFESSIONAL ENGINEER JOSUE J. VAGLIENTY No. 70783 Exp. 6-30-13 CIVIL STATE OF CALIFORNIA

THE STATE OF CALIFORNIA OR ITS OFFICERS OR AGENTS SHALL NOT BE RESPONSIBLE FOR THE ACCURACY OR COMPLETENESS OF SCANNED COPIES OF THIS PLAN SHEET.

RBF CONSULTING
14725 ALTON PKWY
IRVINE, CA 92618

OCTA
550 S. MAIN STREET
ORANGE, CA 92863

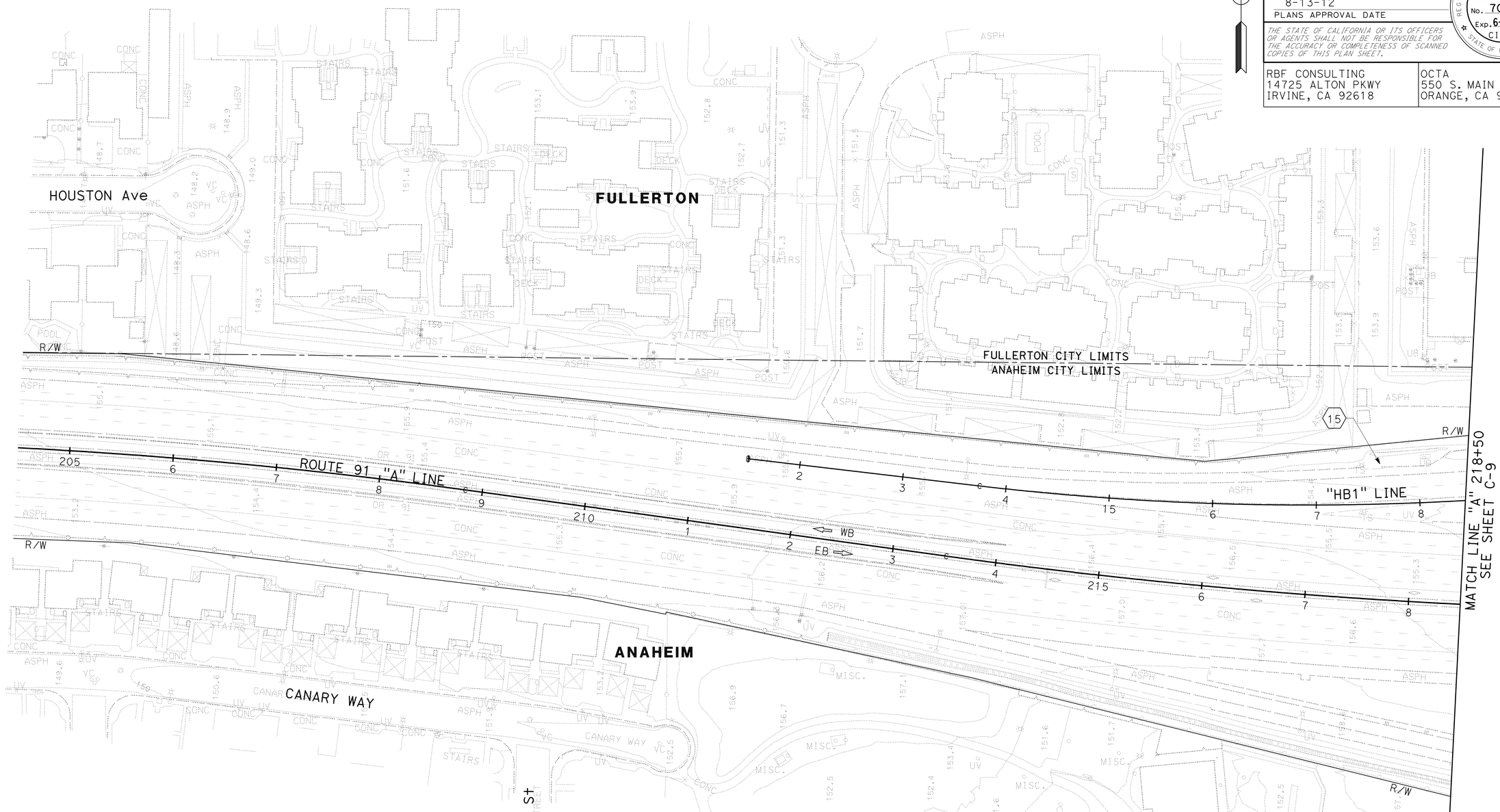

CONSTRUCTION DETAILS
(REMOVAL PLAN)
SCALE: 1" = 50'

C-8

STATE OF CALIFORNIA - DEPARTMENT OF TRANSPORTATION
Caltrans

CONSULTANT FUNCTIONAL SUPERVISOR: MIKE CHESNEY
CALCULATED-DESIGNED BY: STEVEN NGUYEN
CHECKED BY: JOSUE VAGLIENTY
REVISED BY
DATE REVISED

LAST REVISION 06-08-10
DATE PLOTTED => 13-AUG-2012
TIME PLOTTED => 14:08

NOTE:
1. FOR ACCURATE RIGHT OF WAY DATA, CONTACT RIGHT OF WAY ENGINEERING AT THE DISTRICT OFFICE.

Dist	COUNTY	ROUTE	POST MILES TOTAL PROJECT	SHEET No.	TOTAL SHEETS
12	Ora	91	0.9/5.4	64	885

REGISTERED CIVIL ENGINEER 3/7/12 DATE

8-13-12
PLANS APPROVAL DATE

REGISTERED PROFESSIONAL ENGINEER JOSUE J. VAGLIENTY No. 70783 Exp. 6-30-13 CIVIL STATE OF CALIFORNIA

THE STATE OF CALIFORNIA OR ITS OFFICERS OR AGENTS SHALL NOT BE RESPONSIBLE FOR THE ACCURACY OR COMPLETENESS OF SCANNED COPIES OF THIS PLAN SHEET.

RBF CONSULTING
14725 ALTON PKWY
IRVINE, CA 92618

OCTA
550 S. MAIN STREET
ORANGE, CA 92863

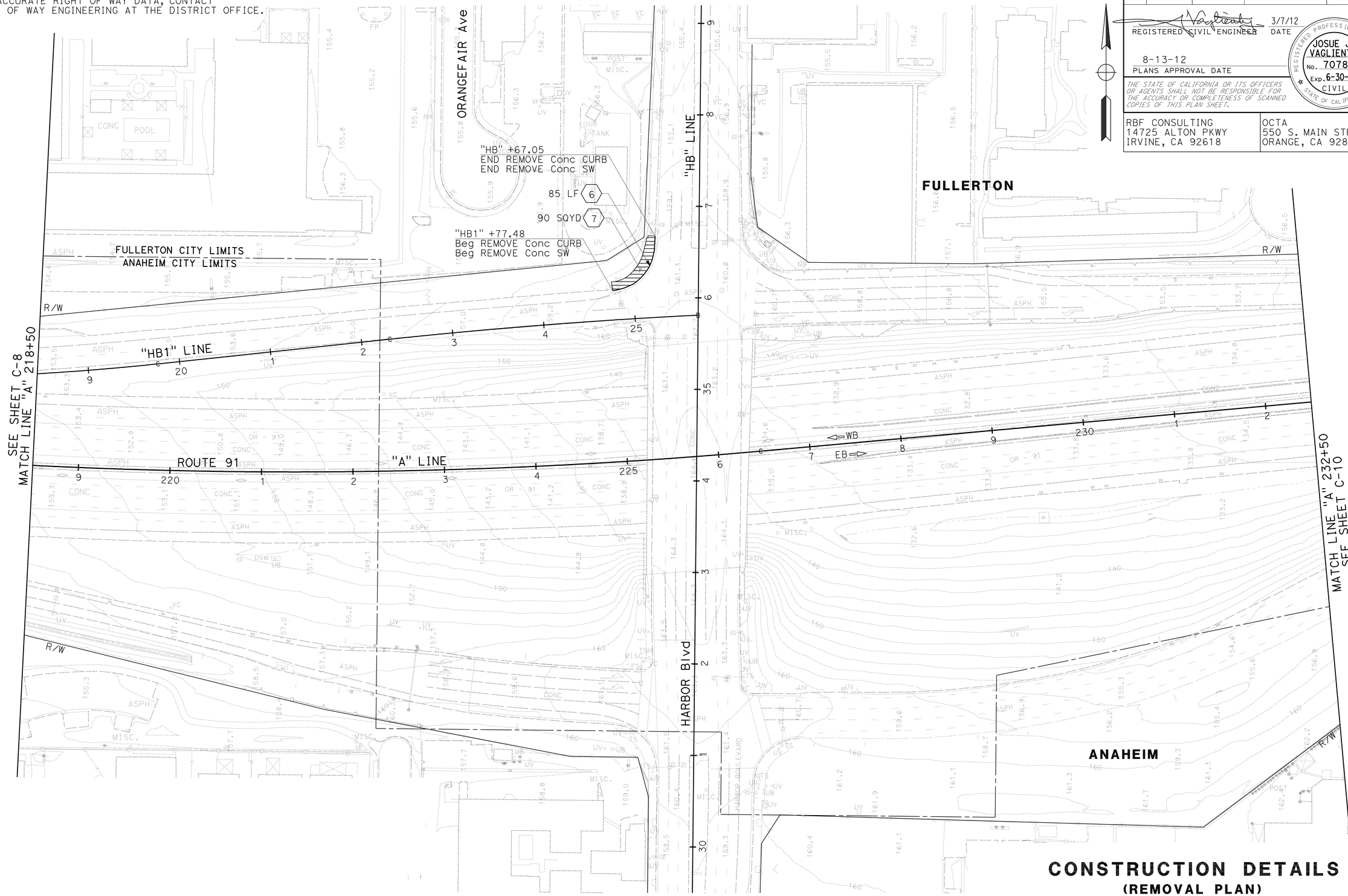

CONSTRUCTION DETAILS
(REMOVAL PLAN)
SCALE: 1" = 50'

C-9

STATE OF CALIFORNIA - DEPARTMENT OF TRANSPORTATION
Caltrans
CONSULTANT FUNCTIONAL SUPERVISOR: MIKE CHESNEY
CALCULATED-DESIGNED BY: STEVEN NGUYEN
CHECKED BY: JOSUE VAGLIENTY
REVISED BY
DATE REVISED

LAST REVISION 06-08-10
DATE PLOTTED => 13-AUG-2012
TIME PLOTTED => 14:08

NOTE:
1. FOR ACCURATE RIGHT OF WAY DATA, CONTACT RIGHT OF WAY ENGINEERING AT THE DISTRICT OFFICE.

Dist	COUNTY	ROUTE	POST MILES TOTAL PROJECT	SHEET No.	TOTAL SHEETS
12	Ora	91	0.9/5.4	65	885

REGISTERED CIVIL ENGINEER 3/7/12 DATE

8-13-12
PLANS APPROVAL DATE

REGISTERED PROFESSIONAL ENGINEER JOSUE J. VAGLIENTY No. 70783 Exp. 6-30-13 CIVIL STATE OF CALIFORNIA

THE STATE OF CALIFORNIA OR ITS OFFICERS OR AGENTS SHALL NOT BE RESPONSIBLE FOR THE ACCURACY OR COMPLETENESS OF SCANNED COPIES OF THIS PLAN SHEET.

RBF CONSULTING
14725 ALTON PKWY
IRVINE, CA 92618

OCTA
550 S. MAIN STREET
ORANGE, CA 92863

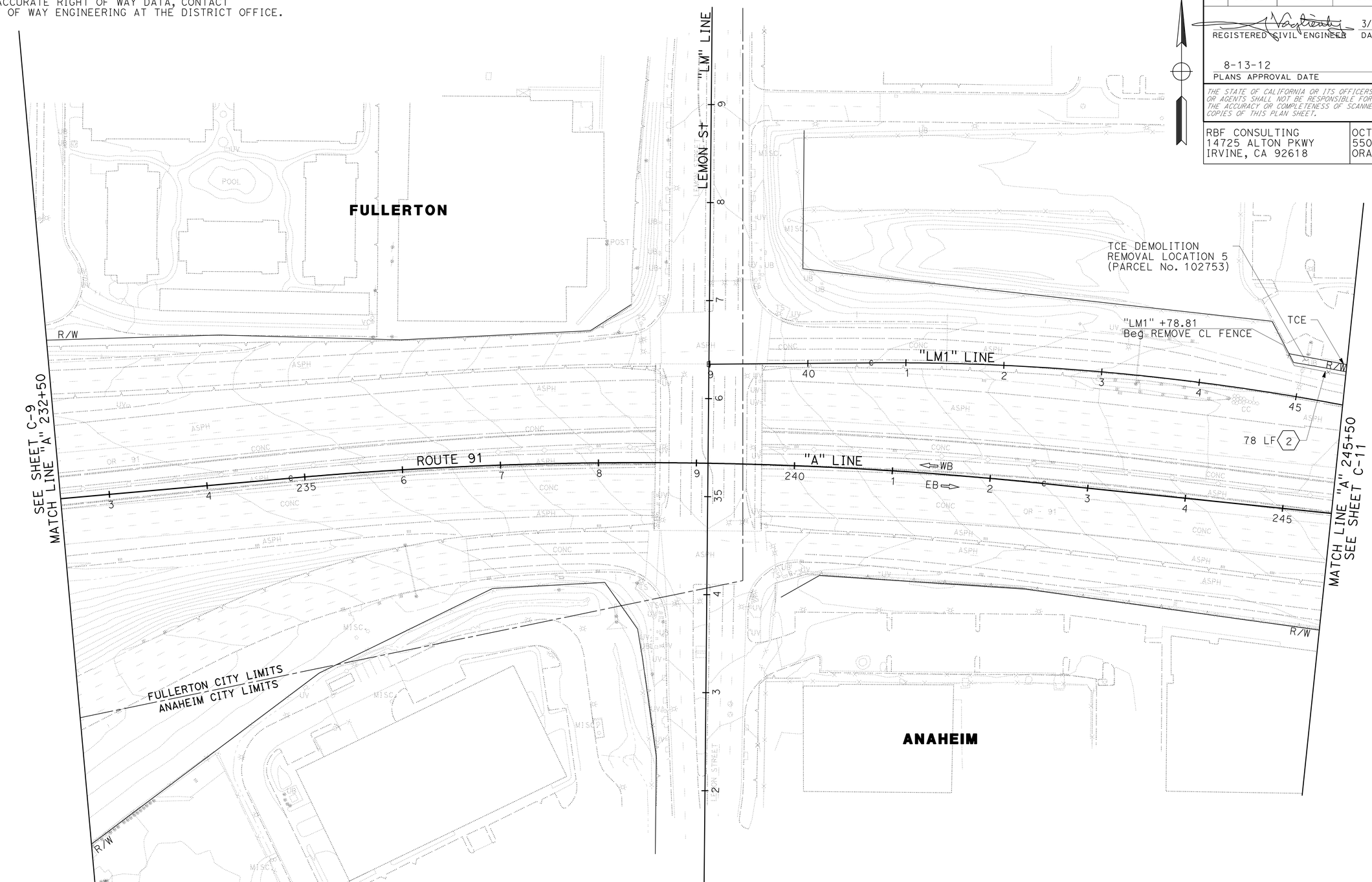

CONSTRUCTION DETAILS
(REMOVAL PLAN)
SCALE: 1" = 50'

C-10

STATE OF CALIFORNIA - DEPARTMENT OF TRANSPORTATION
Caltrans

CONSULTANT FUNCTIONAL SUPERVISOR: MIKE CHESNEY
CALCULATED-DESIGNED BY: STEVEN NGUYEN
CHECKED BY: JOSUE VAGLIENTY
REVISED BY
DATE REVISED

LAST REVISION 06-08-10
DATE PLOTTED => 13-AUG-2012
TIME PLOTTED => 14:09

NOTE:
1. FOR ACCURATE RIGHT OF WAY DATA, CONTACT RIGHT OF WAY ENGINEERING AT THE DISTRICT OFFICE.

Dist	COUNTY	ROUTE	POST MILES TOTAL PROJECT	SHEET No.	TOTAL SHEETS
12	Ora	91	0.9/5.4	66	885

REGISTERED CIVIL ENGINEER 3/7/12 DATE

8-13-12
PLANS APPROVAL DATE

REGISTERED PROFESSIONAL ENGINEER JOSUE J. VAGLIENTY No. 70783 Exp. 6-30-13 CIVIL STATE OF CALIFORNIA

THE STATE OF CALIFORNIA OR ITS OFFICERS OR AGENTS SHALL NOT BE RESPONSIBLE FOR THE ACCURACY OR COMPLETENESS OF SCANNED COPIES OF THIS PLAN SHEET.

RBF CONSULTING
14725 ALTON PKWY
IRVINE, CA 92618

OCTA
550 S. MAIN STREET
ORANGE, CA 92863

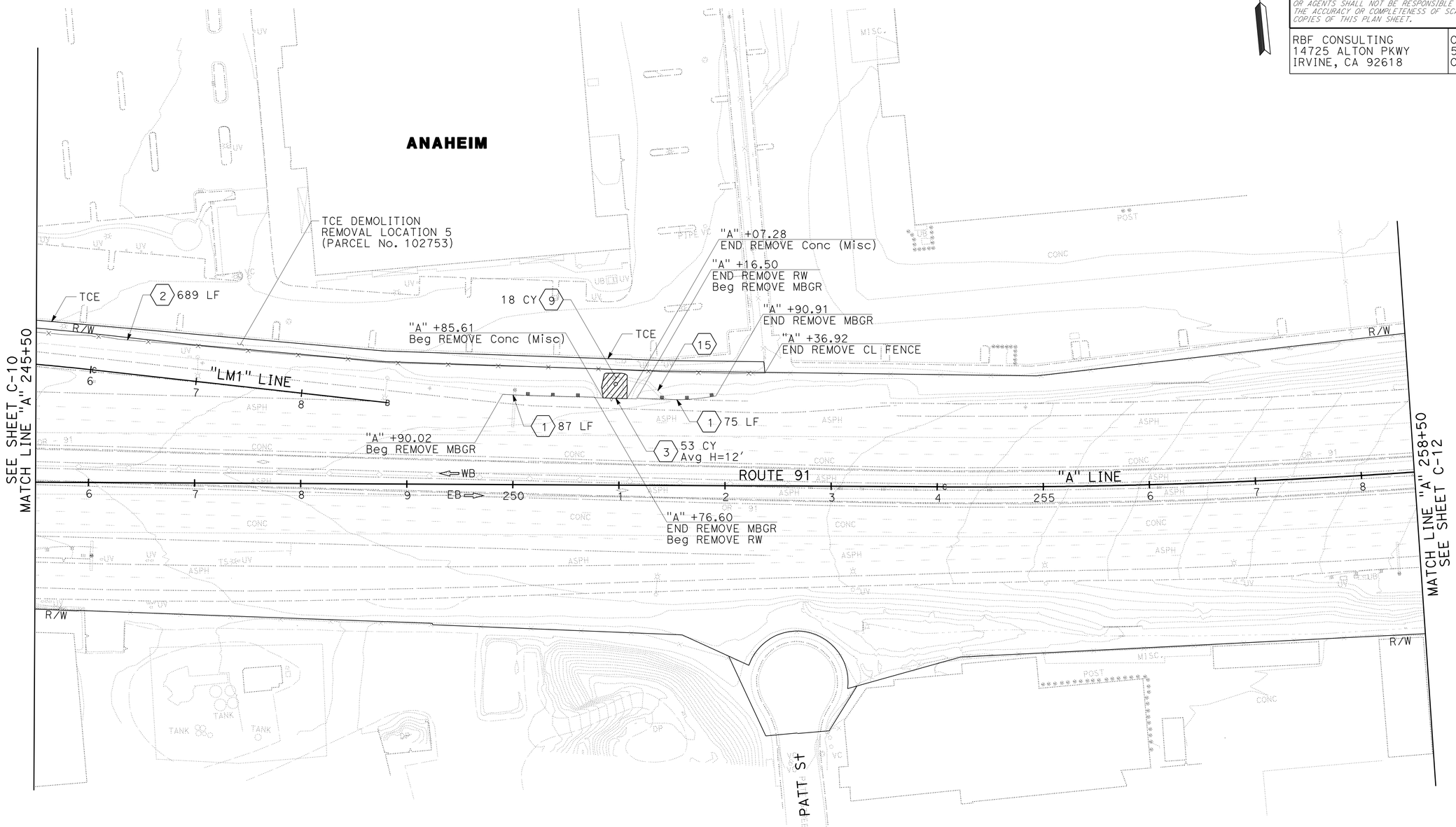

CONSTRUCTION DETAILS
(REMOVAL PLAN)
SCALE: 1" = 50'

C-11

STATE OF CALIFORNIA - DEPARTMENT OF TRANSPORTATION
Caltrans
CONSULTANT FUNCTIONAL SUPERVISOR: MIKE CHESNEY
CALCULATED-DESIGNED BY: JOSUE VAGLIENTY
CHECKED BY: STEVEN NGUYEN
REVISED BY
DATE REVISED

LAST REVISION 06-08-10
DATE PLOTTED => 13-AUG-2012
TIME PLOTTED => 12:48

NOTE:
1. FOR ACCURATE RIGHT OF WAY DATA, CONTACT RIGHT OF WAY ENGINEERING AT THE DISTRICT OFFICE.

Dist	COUNTY	ROUTE	POST MILES TOTAL PROJECT	SHEET No.	TOTAL SHEETS
12	Ora	91	0.9/5.4	67	885

REGISTERED CIVIL ENGINEER 3/7/12 DATE

8-13-12
PLANS APPROVAL DATE

REGISTERED PROFESSIONAL ENGINEER JOSUE J. VAGLIENTY No. 70783 Exp. 6-30-13 CIVIL STATE OF CALIFORNIA

THE STATE OF CALIFORNIA OR ITS OFFICERS OR AGENTS SHALL NOT BE RESPONSIBLE FOR THE ACCURACY OR COMPLETENESS OF SCANNED COPIES OF THIS PLAN SHEET.

RBF CONSULTING
14725 ALTON PKWY
IRVINE, CA 92618

OCTA
550 S. MAIN STREET
ORANGE, CA 92863

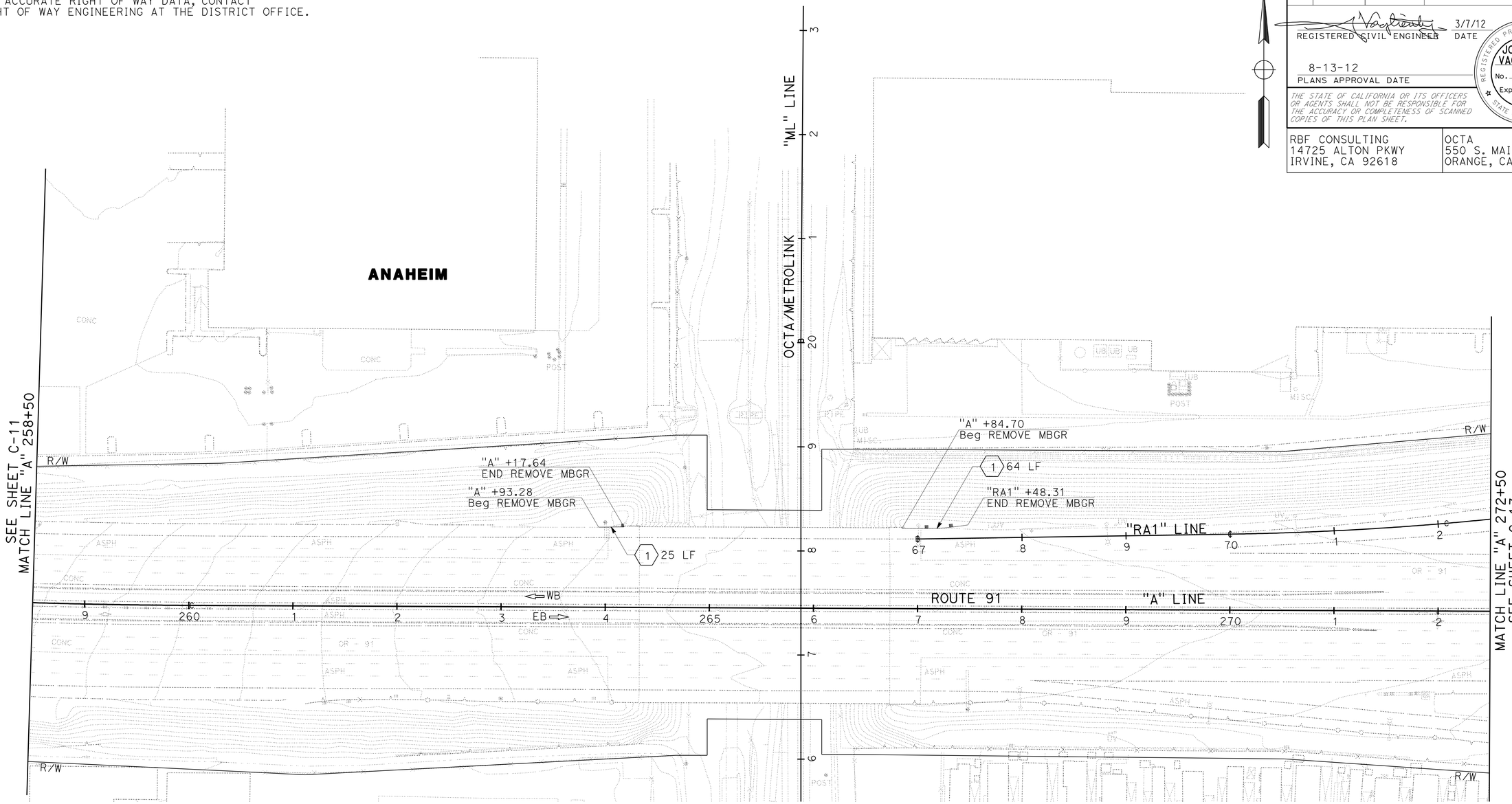

CONSTRUCTION DETAILS
(REMOVAL PLAN)
SCALE: 1" = 50'

C-12

STATE OF CALIFORNIA - DEPARTMENT OF TRANSPORTATION
Caltrans
CONSULTANT FUNCTIONAL SUPERVISOR: MIKE CHESNEY
CALCULATED-DESIGNED BY: STEVEN NGUYEN
CHECKED BY: JOSUE VAGLIENTY
REVISED BY
DATE REVISED

LAST REVISION 06-08-10
DATE PLOTTED => 13-AUG-2012
TIME PLOTTED => 12:48

NOTE:
1. FOR ACCURATE RIGHT OF WAY DATA, CONTACT RIGHT OF WAY ENGINEERING AT THE DISTRICT OFFICE.

Dist	COUNTY	ROUTE	POST MILES TOTAL PROJECT	SHEET No.	TOTAL SHEETS
12	Ora	91	0.9/5.4	68	885

REGISTERED CIVIL ENGINEER 3/7/12 DATE

8-13-12
PLANS APPROVAL DATE

REGISTERED PROFESSIONAL ENGINEER JOSUE J. VAGLIENTY No. 70783 Exp. 6-30-13 CIVIL STATE OF CALIFORNIA

THE STATE OF CALIFORNIA OR ITS OFFICERS OR AGENTS SHALL NOT BE RESPONSIBLE FOR THE ACCURACY OR COMPLETENESS OF SCANNED COPIES OF THIS PLAN SHEET.

RBF CONSULTING
14725 ALTON PKWY
IRVINE, CA 92618

OCTA
550 S. MAIN STREET
ORANGE, CA 92863

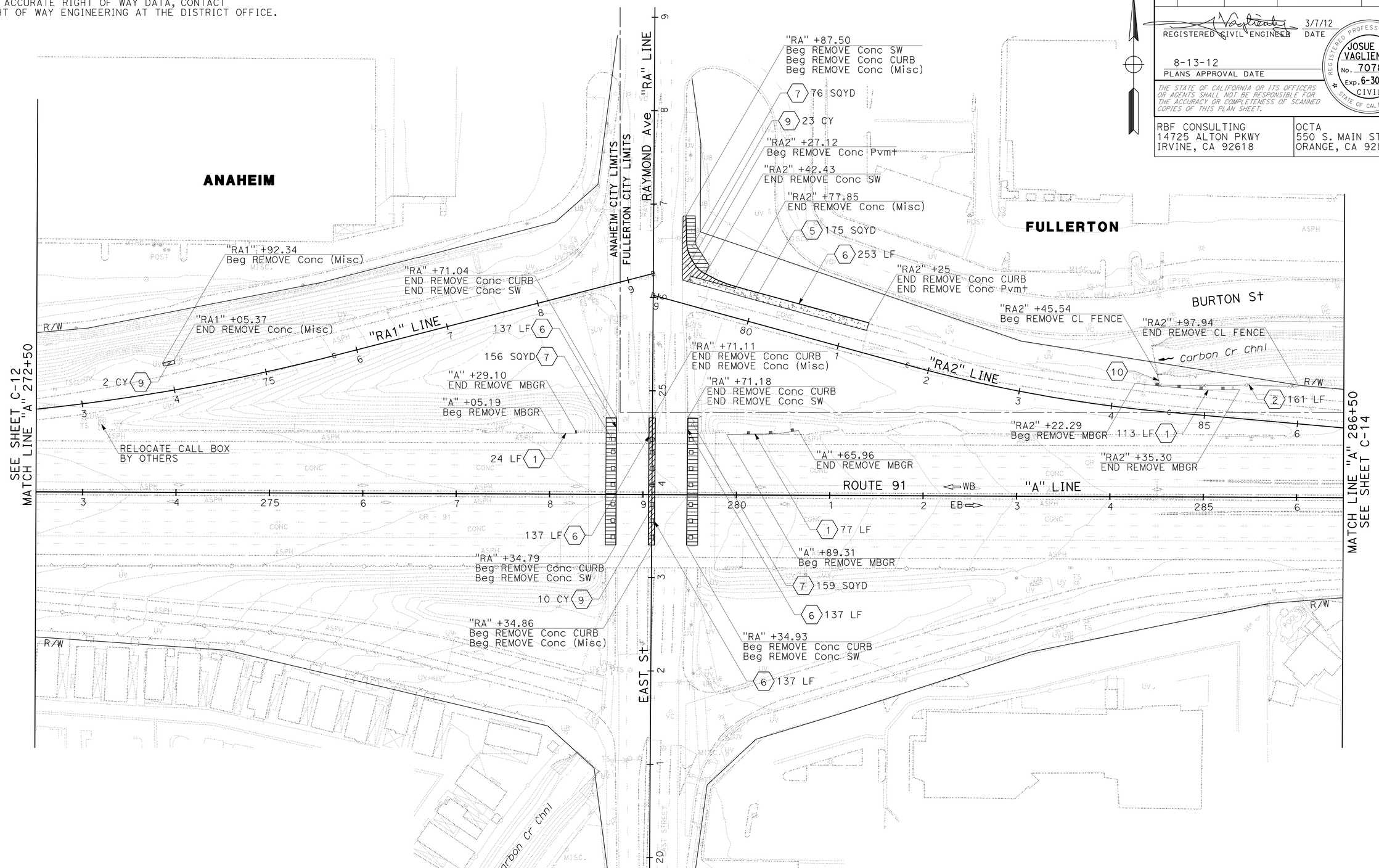

CONSTRUCTION DETAILS
(REMOVAL PLAN)
SCALE: 1" = 50'

C-13

STATE OF CALIFORNIA - DEPARTMENT OF TRANSPORTATION
Caltrans

CONSULTANT FUNCTIONAL SUPERVISOR: MIKE CHESNEY
CALCULATED-DESIGNED BY: STEVEN NGUYEN
CHECKED BY: JOSUE VAGLIENTY
REVISED BY
DATE REVISED

LAST REVISION 06-08-10
DATE PLOTTED => 13-AUG-2012
TIME PLOTTED => 12:48

Dist	COUNTY	ROUTE	POST MILES TOTAL PROJECT	SHEET No.	TOTAL SHEETS
12	Ora	91	0.9/5.4	69	885

REGISTERED CIVIL ENGINEER 3/7/12 DATE

8-13-12
PLANS APPROVAL DATE

REGISTERED PROFESSIONAL ENGINEER JOSUE J. VAGLIENTY No. 70783 Exp. 6-30-13 CIVIL STATE OF CALIFORNIA

THE STATE OF CALIFORNIA OR ITS OFFICERS OR AGENTS SHALL NOT BE RESPONSIBLE FOR THE ACCURACY OR COMPLETENESS OF SCANNED COPIES OF THIS PLAN SHEET.

RBF CONSULTING
14725 ALTON PKWY
IRVINE, CA 92618

OCTA
550 S. MAIN STREET
ORANGE, CA 92863

NOTES:
1. FOR ACCURATE RIGHT OF WAY DATA, CONTACT RIGHT OF WAY ENGINEERING AT THE DISTRICT OFFICE.
2. TCE OFFSETS ARE FROM RETAINING WALL LAYOUT LINE, EXCEPT PARCEL 102761.

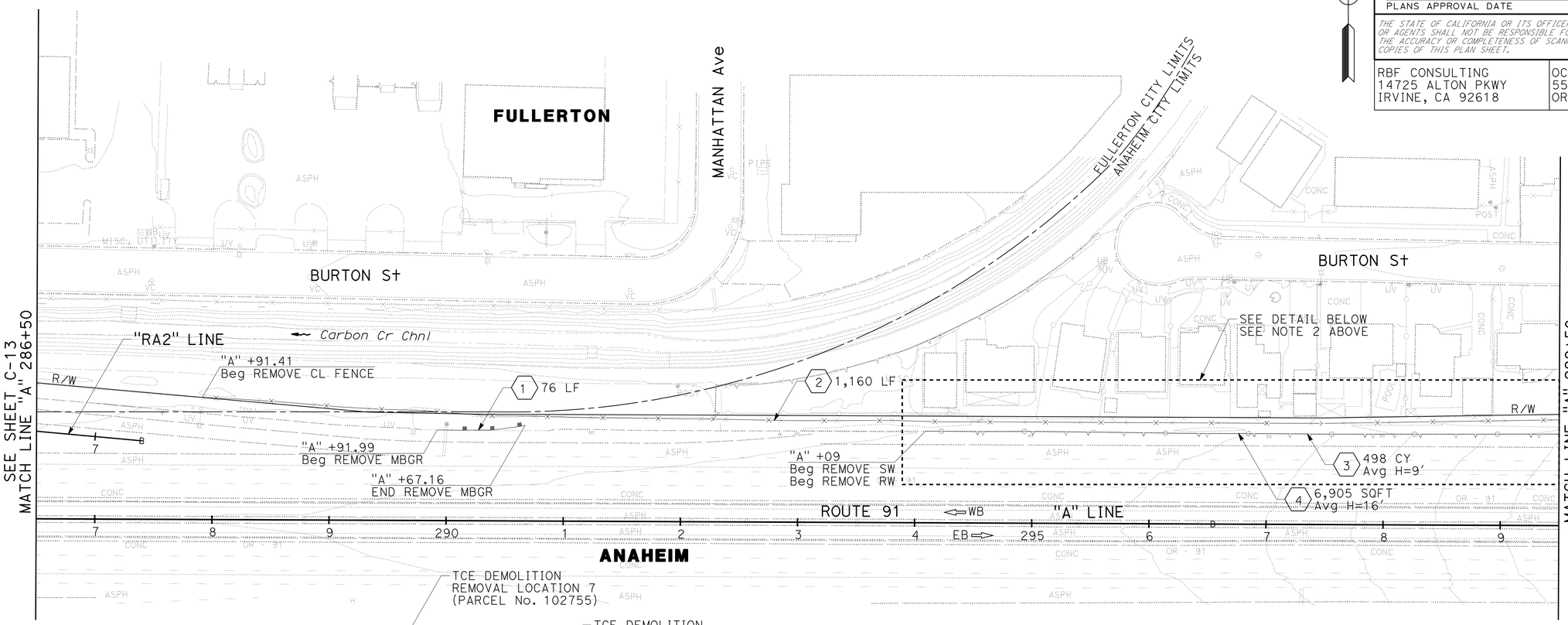

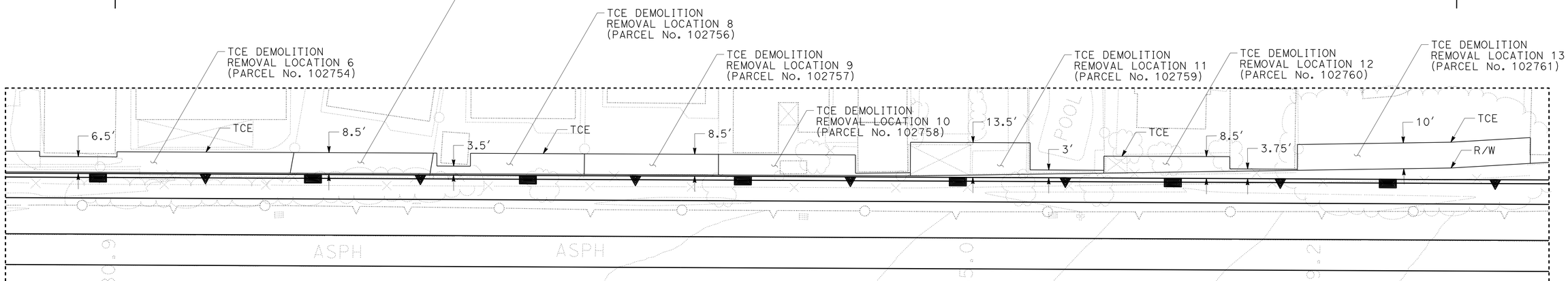

DETAIL
SCALE: 1"=20'

CONSTRUCTION DETAILS
(REMOVAL PLAN)
SCALE: 1" = 50'

C-14

STATE OF CALIFORNIA - DEPARTMENT OF TRANSPORTATION
Caltrans

CONSULTANT FUNCTIONAL SUPERVISOR: MIKE CHESNEY
CALCULATED-DESIGNED BY: STEVEN NGUYEN
CHECKED BY: JOSUE VAGLIENTY
REVISED BY
DATE REVISED

LAST REVISION 06-08-10
DATE PLOTTED => 13-AUG-2012
TIME PLOTTED => 12:49

NOTE:
1. FOR ACCURATE RIGHT OF WAY DATA, CONTACT RIGHT OF WAY ENGINEERING AT THE DISTRICT OFFICE.

Dist	COUNTY	ROUTE	POST MILES TOTAL PROJECT	SHEET No.	TOTAL SHEETS
12	Ora	91	0.9/5.4	70	885

REGISTERED CIVIL ENGINEER 3/7/12 DATE

8-13-12
PLANS APPROVAL DATE

REGISTERED PROFESSIONAL ENGINEER JOSUE J. VAGLIENTY No. 70783 Exp. 6-30-13 CIVIL STATE OF CALIFORNIA

THE STATE OF CALIFORNIA OR ITS OFFICERS OR AGENTS SHALL NOT BE RESPONSIBLE FOR THE ACCURACY OR COMPLETENESS OF SCANNED COPIES OF THIS PLAN SHEET.

RBF CONSULTING
14725 ALTON PKWY
IRVINE, CA 92618

OCTA
550 S. MAIN STREET
ORANGE, CA 92863

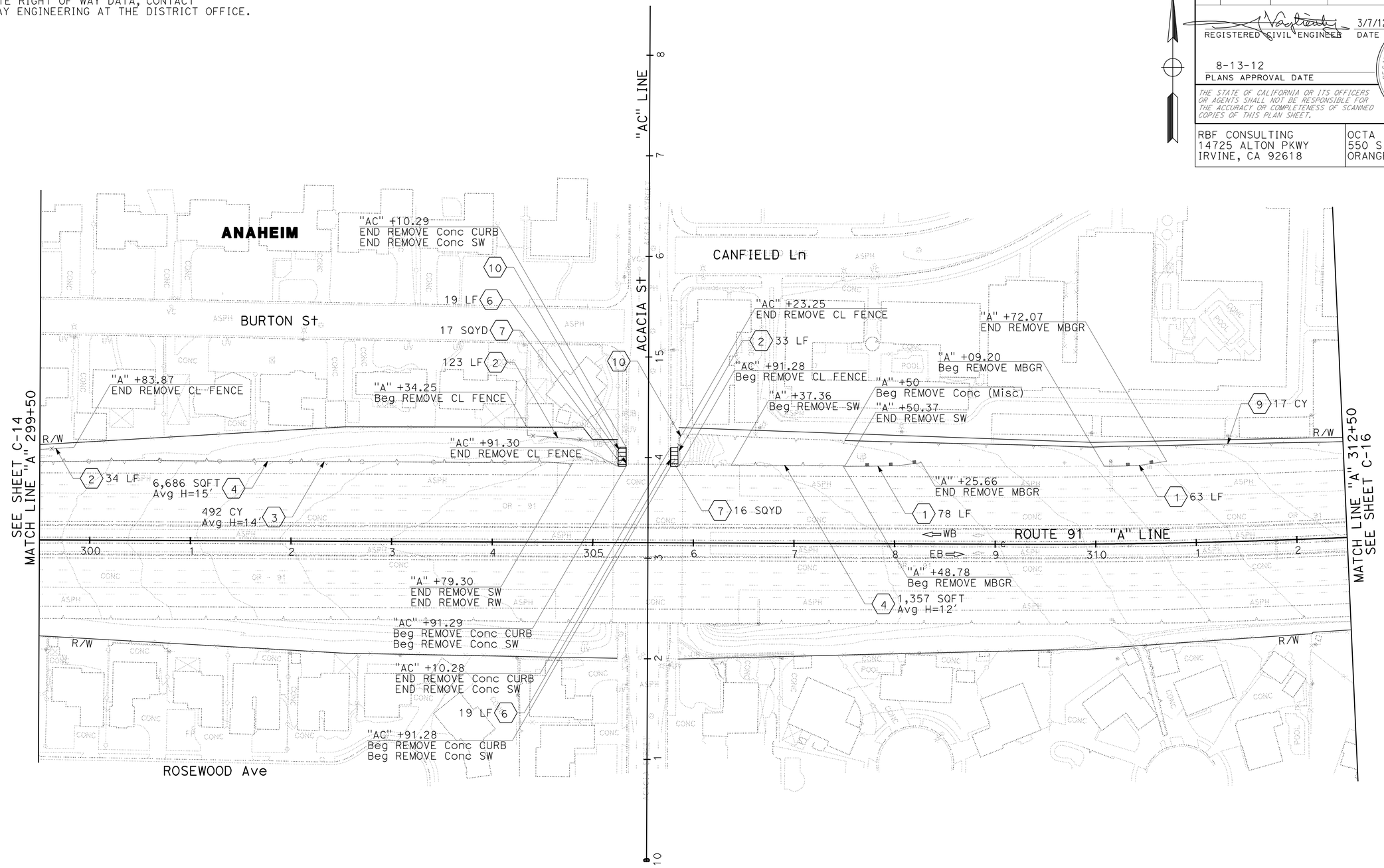

CONSTRUCTION DETAILS
(REMOVAL PLAN)
SCALE: 1" = 50'

C-15

STATE OF CALIFORNIA - DEPARTMENT OF TRANSPORTATION
Caltrans

CONSULTANT FUNCTIONAL SUPERVISOR: MIKE CHESNEY
CALCULATED-DESIGNED BY: STEVEN NGUYEN
CHECKED BY: JOSUE VAGLIENTY
REVISED BY
DATE REVISED

LAST REVISION 06-08-10
DATE PLOTTED => 13-AUG-2012
TIME PLOTTED => 12:49

NOTE:
1. FOR ACCURATE RIGHT OF WAY DATA, CONTACT RIGHT OF WAY ENGINEERING AT THE DISTRICT OFFICE.

Dist	COUNTY	ROUTE	POST MILES TOTAL PROJECT	SHEET No.	TOTAL SHEETS
12	Ora	91	0.9/5.4	71	885

REGISTERED CIVIL ENGINEER 3/7/12 DATE

8-13-12
PLANS APPROVAL DATE

REGISTERED PROFESSIONAL ENGINEER JOSUE J. VAGLIENTY No. 70783 Exp. 6-30-13 CIVIL STATE OF CALIFORNIA

THE STATE OF CALIFORNIA OR ITS OFFICERS OR AGENTS SHALL NOT BE RESPONSIBLE FOR THE ACCURACY OR COMPLETENESS OF SCANNED COPIES OF THIS PLAN SHEET.

RBF CONSULTING
14725 ALTON PKWY
IRVINE, CA 92618

OCTA
550 S. MAIN STREET
ORANGE, CA 92863

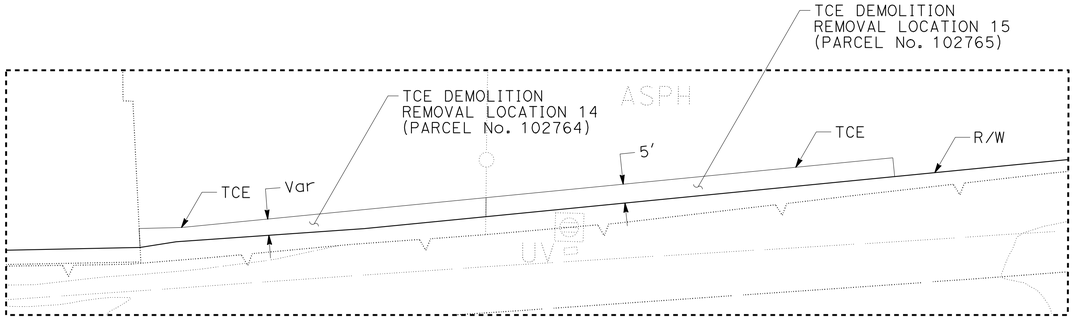

DETAIL
SCALE: 1"=20'

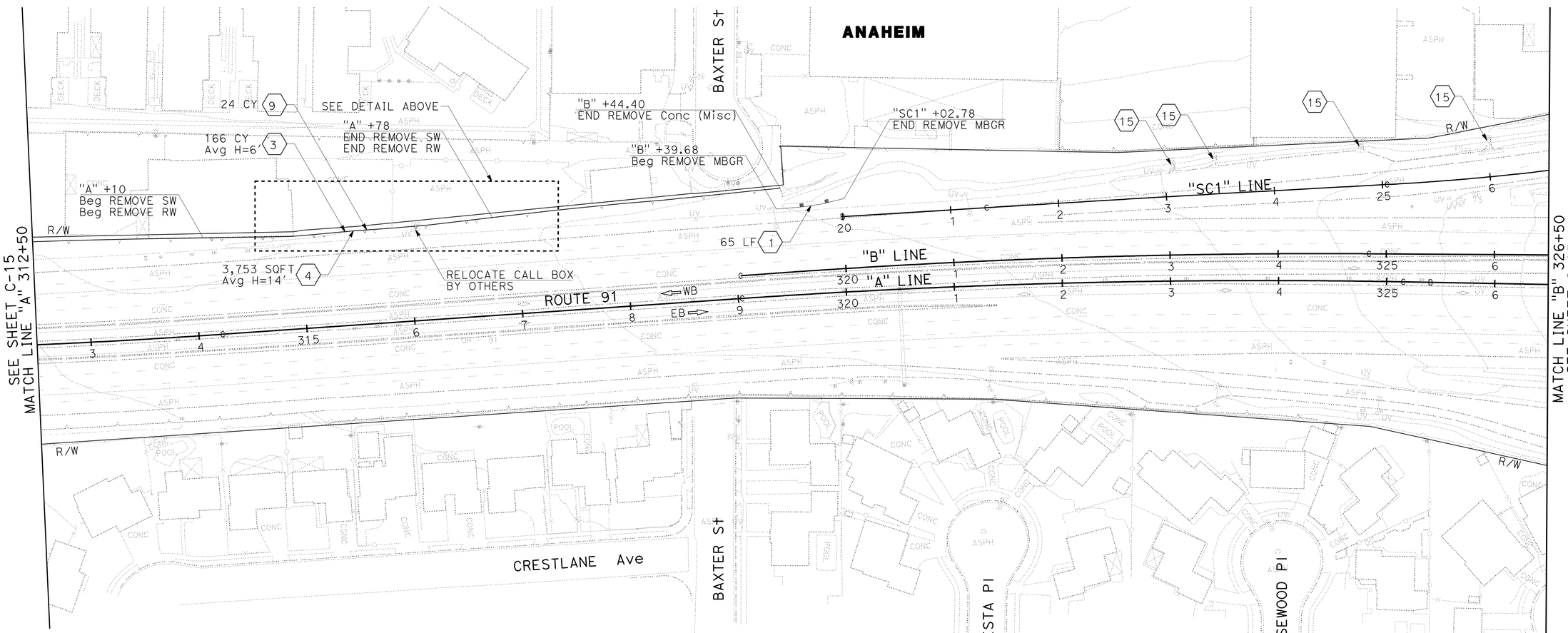

CONSTRUCTION DETAILS
(REMOVAL PLAN)
SCALE: 1" = 50'

C-16

STATE OF CALIFORNIA - DEPARTMENT OF TRANSPORTATION
Caltrans
CONSULTANT FUNCTIONAL SUPERVISOR: MIKE CHESNEY
CALCULATED-DESIGNED BY: STEVEN NGUYEN
CHECKED BY: JOSUE VAGLIENTY
REVISED BY
DATE REVISED

LAST REVISION 06-08-10
DATE PLOTTED => 13-AUG-2012
TIME PLOTTED => 12:49

NOTE:
1. FOR ACCURATE RIGHT OF WAY DATA, CONTACT RIGHT OF WAY ENGINEERING AT THE DISTRICT OFFICE.

Dist	COUNTY	ROUTE	POST MILES TOTAL PROJECT	SHEET No.	TOTAL SHEETS
12	Ora	91	0.9/5.4	72	885

REGISTERED CIVIL ENGINEER 3/7/12 DATE

8-13-12
PLANS APPROVAL DATE

REGISTERED PROFESSIONAL ENGINEER JOSUE J. VAGLIENTY No. 70783 Exp. 6-30-13 CIVIL STATE OF CALIFORNIA

THE STATE OF CALIFORNIA OR ITS OFFICERS OR AGENTS SHALL NOT BE RESPONSIBLE FOR THE ACCURACY OR COMPLETENESS OF SCANNED COPIES OF THIS PLAN SHEET.

RBF CONSULTING
14725 ALTON PKWY
IRVINE, CA 92618

OCTA
550 S. MAIN STREET
ORANGE, CA 92863

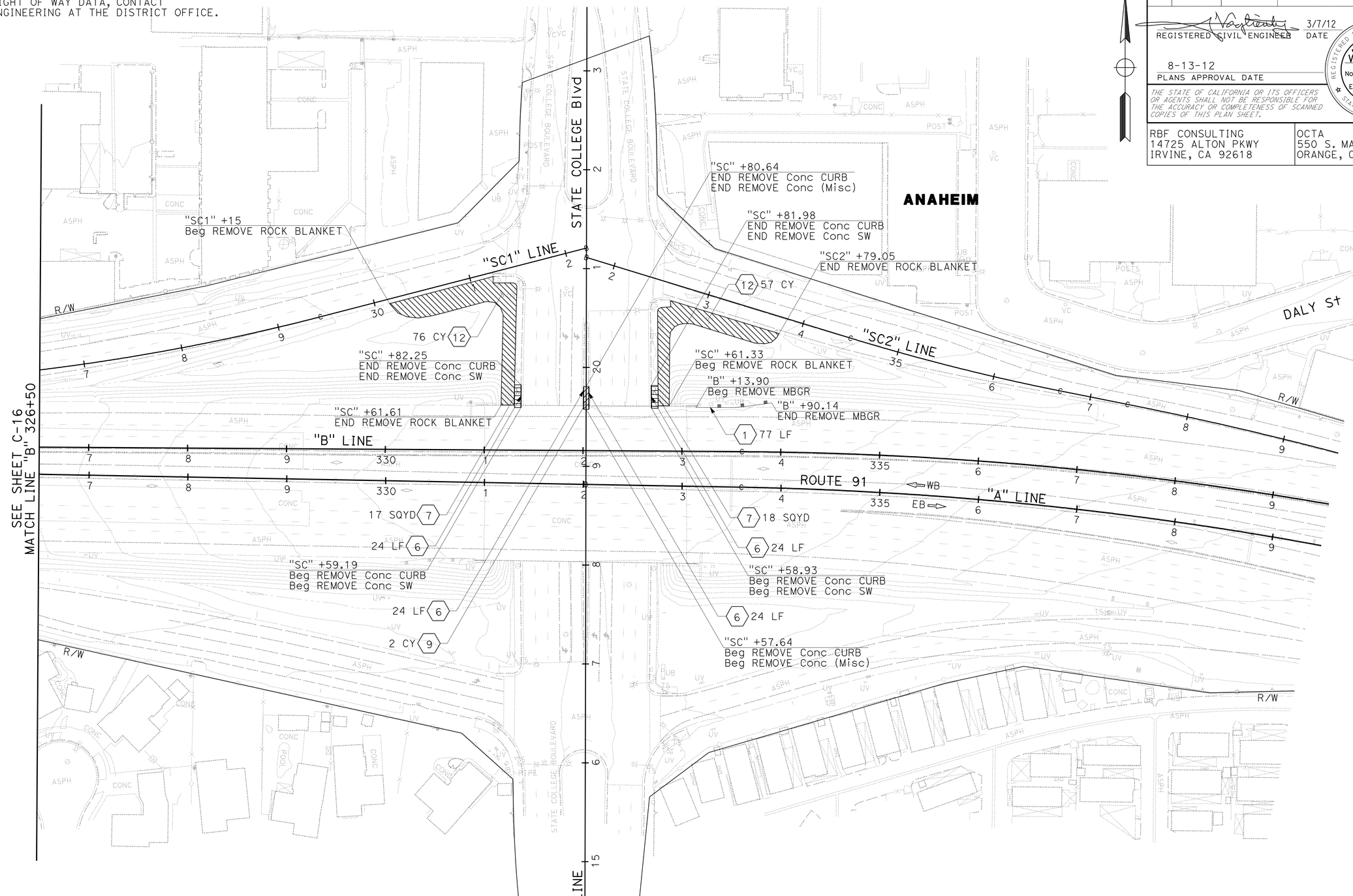

CONSTRUCTION DETAILS
(REMOVAL PLAN)
SCALE: 1" = 50'

C-17

STATE OF CALIFORNIA - DEPARTMENT OF TRANSPORTATION
Caltrans

CONSULTANT FUNCTIONAL SUPERVISOR: MIKE CHESNEY
CALCULATED-DESIGNED BY: JOSUE VAGLIENTY
CHECKED BY: STEVEN NGUYEN
REVISED BY
DATE REVISED

LAST REVISION 06-08-10 | DATE PLOTTED => 13-AUG-2012 | TIME PLOTTED => 12:49

Dist	COUNTY	ROUTE	POST MILES TOTAL PROJECT	SHEET No.	TOTAL SHEETS
12	Ora	91	0.9/5.4	73	885

REGISTERED CIVIL ENGINEER 3/7/12 DATE

8-13-12
PLANS APPROVAL DATE

REGISTERED PROFESSIONAL ENGINEER JOSUE J. VAGLIENTY No. 70783 Exp. 6-30-13 CIVIL STATE OF CALIFORNIA

THE STATE OF CALIFORNIA OR ITS OFFICERS OR AGENTS SHALL NOT BE RESPONSIBLE FOR THE ACCURACY OR COMPLETENESS OF SCANNED COPIES OF THIS PLAN SHEET.

RBF CONSULTING
14725 ALTON PKWY
IRVINE, CA 92618

OCTA
550 S. MAIN STREET
ORANGE, CA 92863

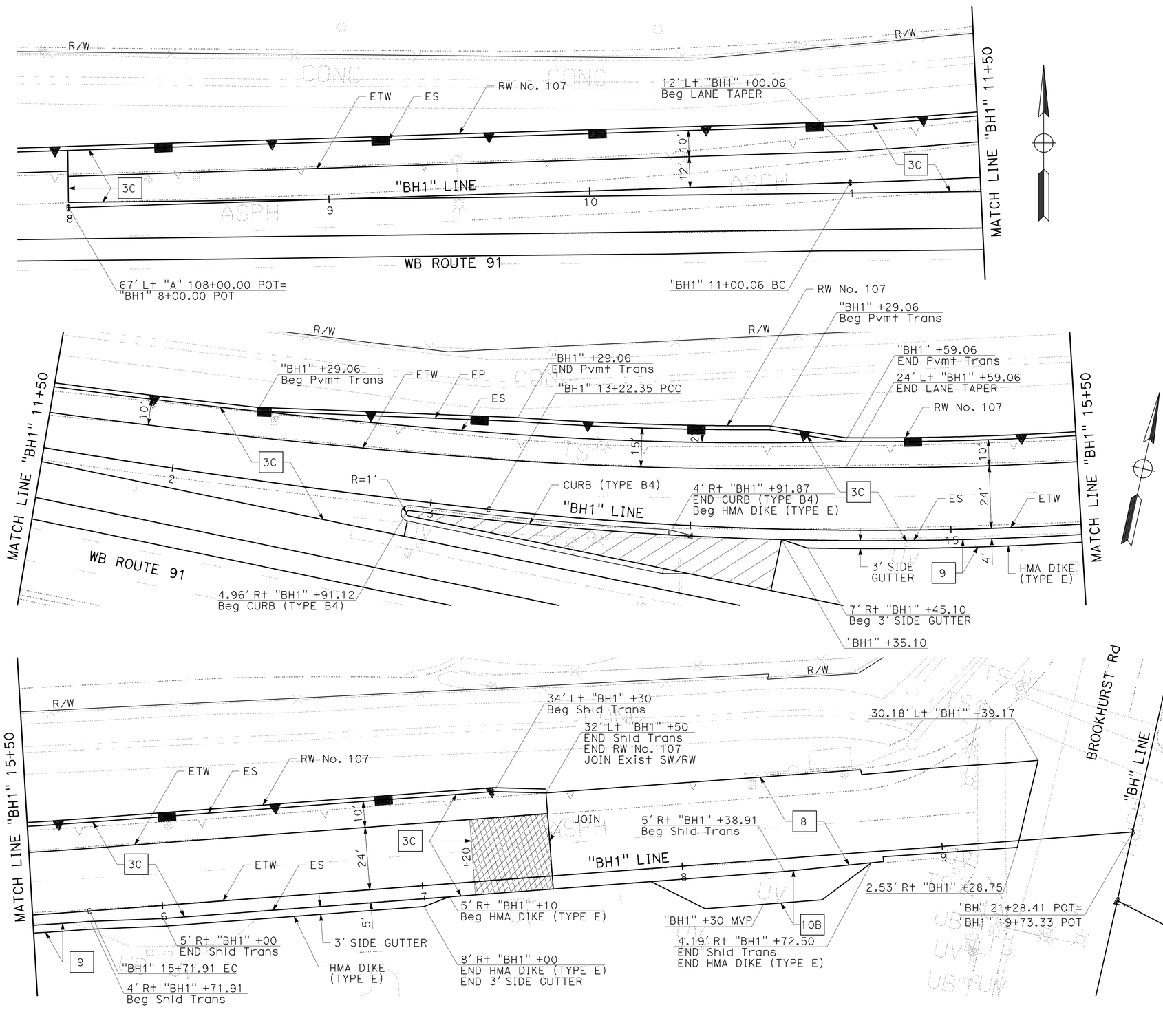

NOTES:

1. FOR CURB AND DIKE TRANSITIONS AND DETAILS, SEE CONSTRUCTION DETAILS SHEET C-31 & C-32.
2. FOR STRUCTURAL PAVEMENT SECTION TYPES, SEE TYPICAL CROSS SECTIONS SHEET X-1.
3. FOR MAINTENANCE VEHICLE PULLOUT (MVP) DETAILS, SEE CONSTRUCTION DETAILS SHEET C-32.
4. FOR MAINLINE DETAILS, SEE LAYOUT SHEETS.

LEGEND THIS SHEET:

6 — 0.20' & Var COLD PLANE AC PAVEMENT
0.20' & Var RHMA-G OVERLAY

MINOR Conc (PATTERNED)

CONSTRUCTION DETAILS
(RAMP "BH1" DETAILS)

SCALE: 1" = 20'

C-18

STATE OF CALIFORNIA - DEPARTMENT OF TRANSPORTATION
Caltrans

CONSULTANT FUNCTIONAL SUPERVISOR: MIKE CHESNEY
CALCULATED-DESIGNED BY: STEVEN NGUYEN
CHECKED BY: JOSUE VAGLIENTY
REVISED BY
DATE REVISED

LAST REVISION 06-08-10
DATE PLOTTED => 13-AUG-2012
TIME PLOTTED => 12:49

Dist	COUNTY	ROUTE	POST MILES TOTAL PROJECT	SHEET No.	TOTAL SHEETS
12	Ora	91	0.9/5.4	74	885

REGISTERED CIVIL ENGINEER 3/7/12 DATE

8-13-12
PLANS APPROVAL DATE

REGISTERED PROFESSIONAL ENGINEER JOSUE J. VAGLIENTY No. 70783 Exp. 6-30-13 CIVIL STATE OF CALIFORNIA

THE STATE OF CALIFORNIA OR ITS OFFICERS OR AGENTS SHALL NOT BE RESPONSIBLE FOR THE ACCURACY OR COMPLETENESS OF SCANNED COPIES OF THIS PLAN SHEET.

RBF CONSULTING
14725 ALTON PKWY
IRVINE, CA 92618

OCTA
550 S. MAIN STREET
ORANGE, CA 92863

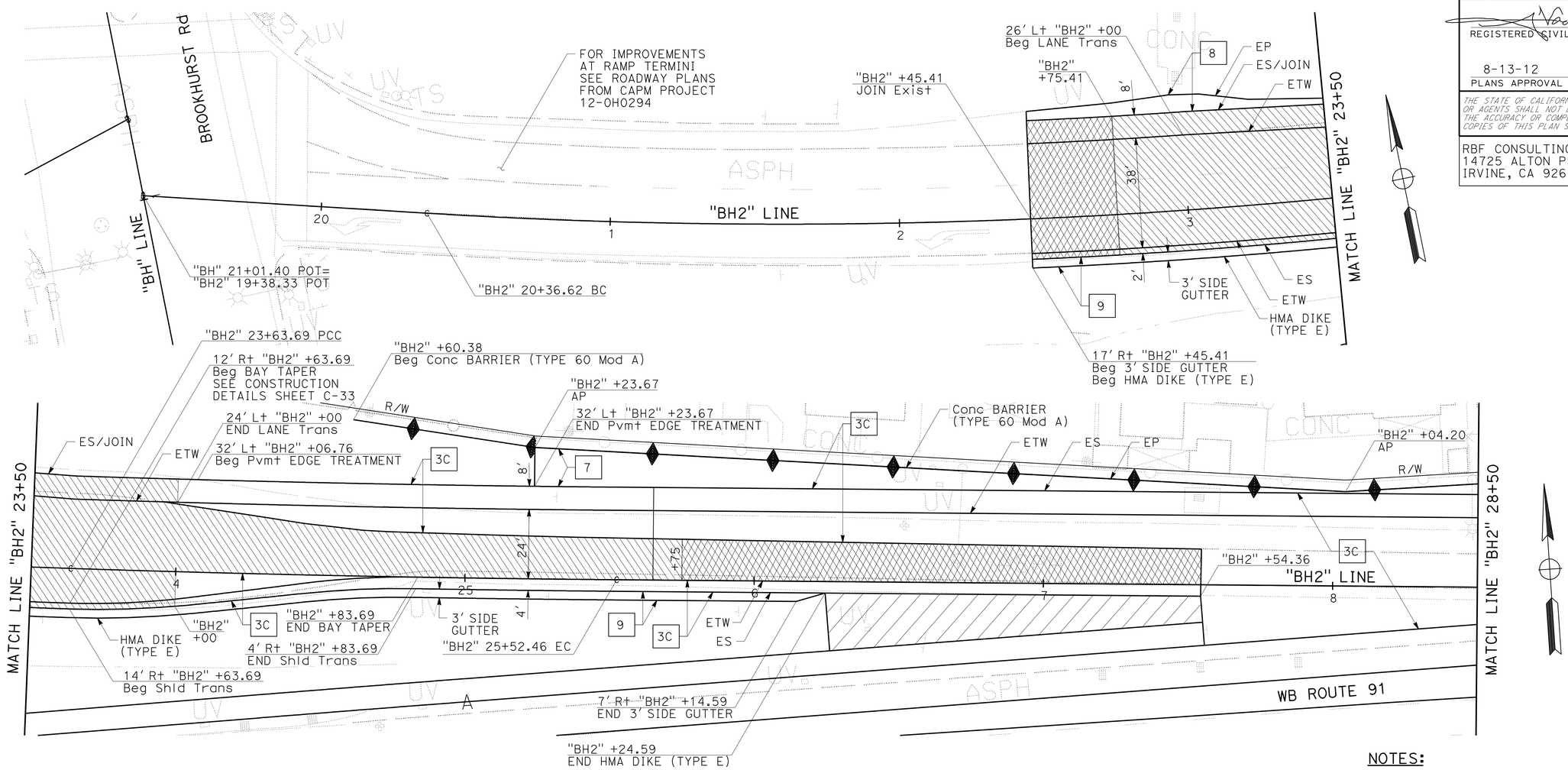

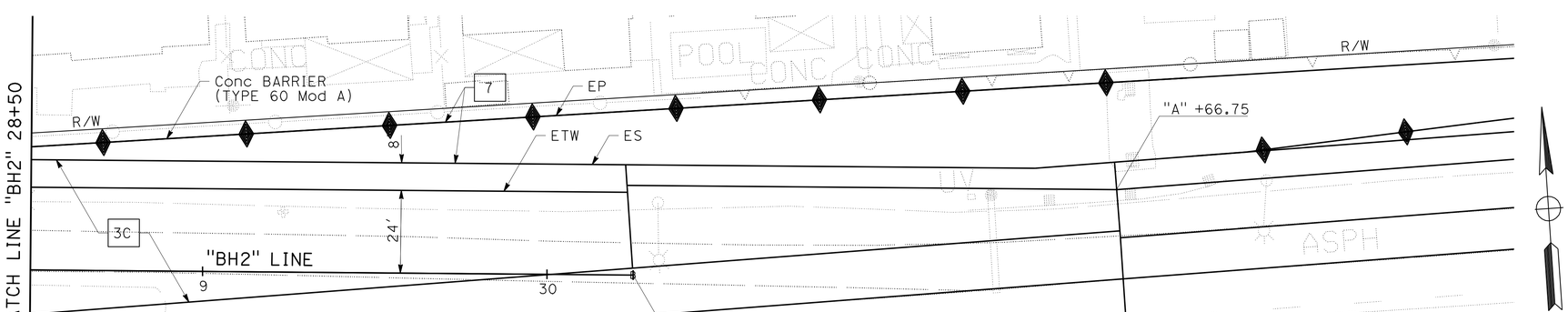

NOTES:

1. FOR CURB AND DIKE TRANSITIONS AND DETAILS, SEE CONSTRUCTION DETAILS SHEET C-31 & C-32.
2. FOR STRUCTURAL PAVEMENT SECTION TYPES, SEE TYPICAL CROSS SECTIONS SHEET X-1.
3. FOR MAINTENANCE VEHICLE PULLOUT (MVP) DETAILS, SEE CONSTRUCTION DETAILS SHEET C-32.
4. FOR MAINLINE DETAILS, SEE LAYOUT SHEETS.

LEGEND THIS SHEET:

- 5 — 0.20' & Var RHMA-G OVERLAY
- 6 — 0.20' & Var COLD PLANE AC PAVEMENT; 0.20' & Var RHMA-G OVERLAY
- MINOR Conc (PATTERNED)

CONSTRUCTION DETAILS
(RAMP "BH2" DETAILS)

SCALE: 1" = 20'

C-19

STATE OF CALIFORNIA - DEPARTMENT OF TRANSPORTATION
Caltrans

CONSULTANT FUNCTIONAL SUPERVISOR: MIKE CHESNEY
CALCULATED-DESIGNED BY: STEVEN NGUYEN
CHECKED BY: JOSUE VAGLIENTY
REVISED BY
DATE REVISED

LAST REVISION 06-08-10
DATE PLOTTED => 13-AUG-2012
TIME PLOTTED => 12:49

Dist	COUNTY	ROUTE	POST MILES TOTAL PROJECT	SHEET No.	TOTAL SHEETS
12	Ora	91	0.9/5.4	75	885

REGISTERED CIVIL ENGINEER 6/21/12 DATE

8-13-12
PLANS APPROVAL DATE

REGISTERED PROFESSIONAL ENGINEER JOSUE J. VAGLIENTY No. 70783 Exp. 6-30-13 CIVIL STATE OF CALIFORNIA

THE STATE OF CALIFORNIA OR ITS OFFICERS OR AGENTS SHALL NOT BE RESPONSIBLE FOR THE ACCURACY OR COMPLETENESS OF SCANNED COPIES OF THIS PLAN SHEET.

RBF CONSULTING
14725 ALTON PKWY
IRVINE, CA 92618

OCTA
550 S. MAIN STREET
ORANGE, CA 92863

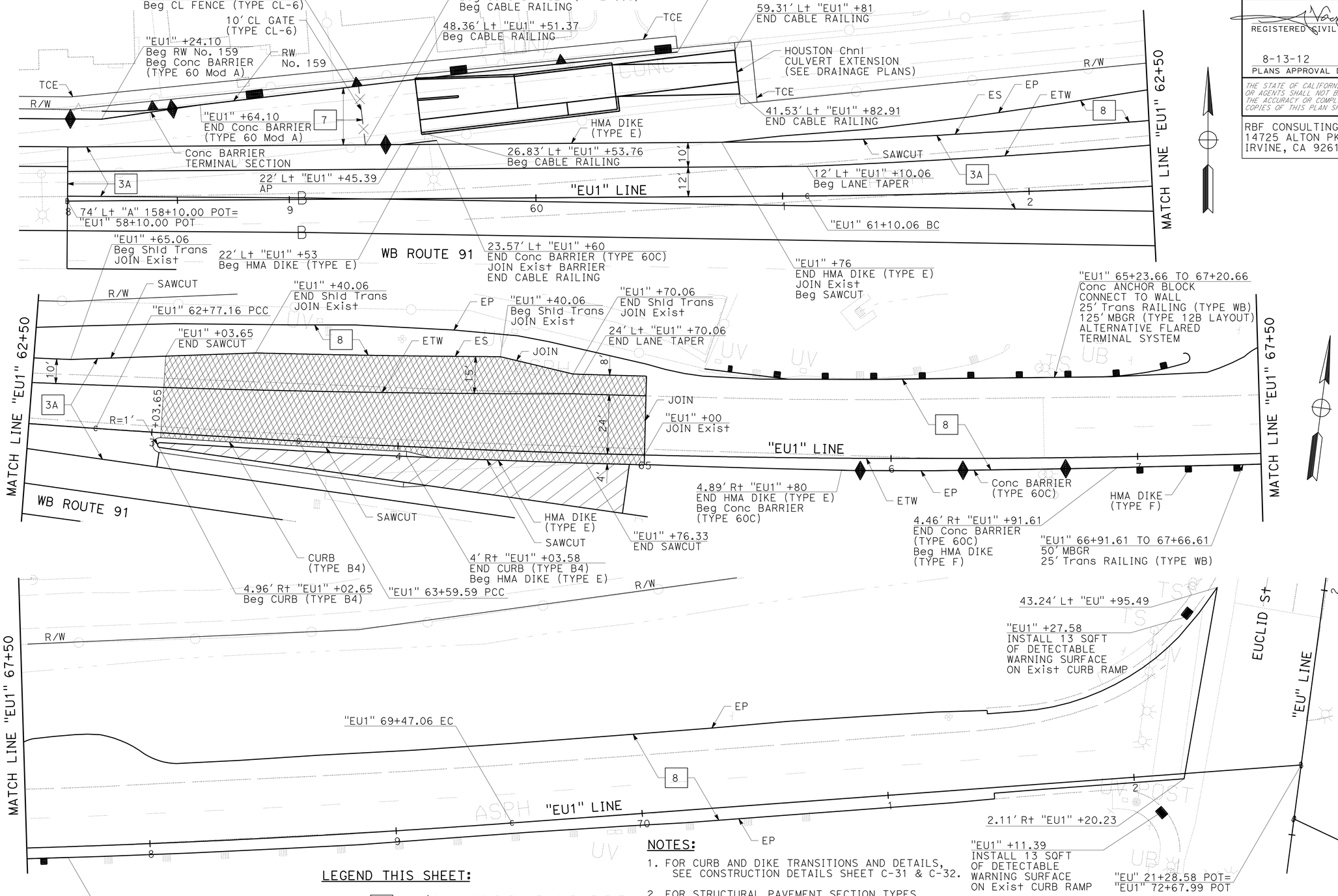

LEGEND THIS SHEET:

- 6 — 0.20' & Var COLD PLANE AC PAVEMENT; 0.20' & Var RHMA-G OVERLAY
- MINOR Conc (PATTERNED)

NOTES:

1. FOR CURB AND DIKE TRANSITIONS AND DETAILS, SEE CONSTRUCTION DETAILS SHEET C-31 & C-32.
2. FOR STRUCTURAL PAVEMENT SECTION TYPES, SEE TYPICAL CROSS SECTIONS SHEET X-1.
3. FOR MAINLINE DETAILS, SEE LAYOUT SHEETS.
4. FOR Conc BARRIER TERMINAL SECTION, SEE CONSTRUCTION DETAILS SHEET C-37.
5. FOR Conc ANCHOR BLOCK AND CONNECTION DETAILS, SEE "CONNECTION DETAIL DD" ON Std PLAN A77J3.

CONSTRUCTION DETAILS
(RAMP "EU1" DETAILS)

SCALE: 1" = 20'

C-20

STATE OF CALIFORNIA - DEPARTMENT OF TRANSPORTATION
Caltrans

CONSULTANT FUNCTIONAL SUPERVISOR: MIKE CHESNEY
CALCULATED-DESIGNED BY: STEVEN NGUYEN
CHECKED BY: JOSUE VAGLIENTY
REVISED BY
DATE REVISED

LAST REVISION 06-08-10
DATE PLOTTED => 17-AUG-2012
TIME PLOTTED => 06:36

Dist	COUNTY	ROUTE	POST MILES TOTAL PROJECT	SHEET No.	TOTAL SHEETS
12	Ora	91	0.9/5.4	76	885

REGISTERED CIVIL ENGINEER 6/21/12 DATE

8-13-12
PLANS APPROVAL DATE

REGISTERED PROFESSIONAL ENGINEER JOSUE J. VAGLIENTY No. 70783 Exp. 6-30-13 CIVIL STATE OF CALIFORNIA

THE STATE OF CALIFORNIA OR ITS OFFICERS OR AGENTS SHALL NOT BE RESPONSIBLE FOR THE ACCURACY OR COMPLETENESS OF SCANNED COPIES OF THIS PLAN SHEET.

RBF CONSULTING
14725 ALTON PKWY
IRVINE, CA 92618

OCTA
550 S. MAIN STREET
ORANGE, CA 92863

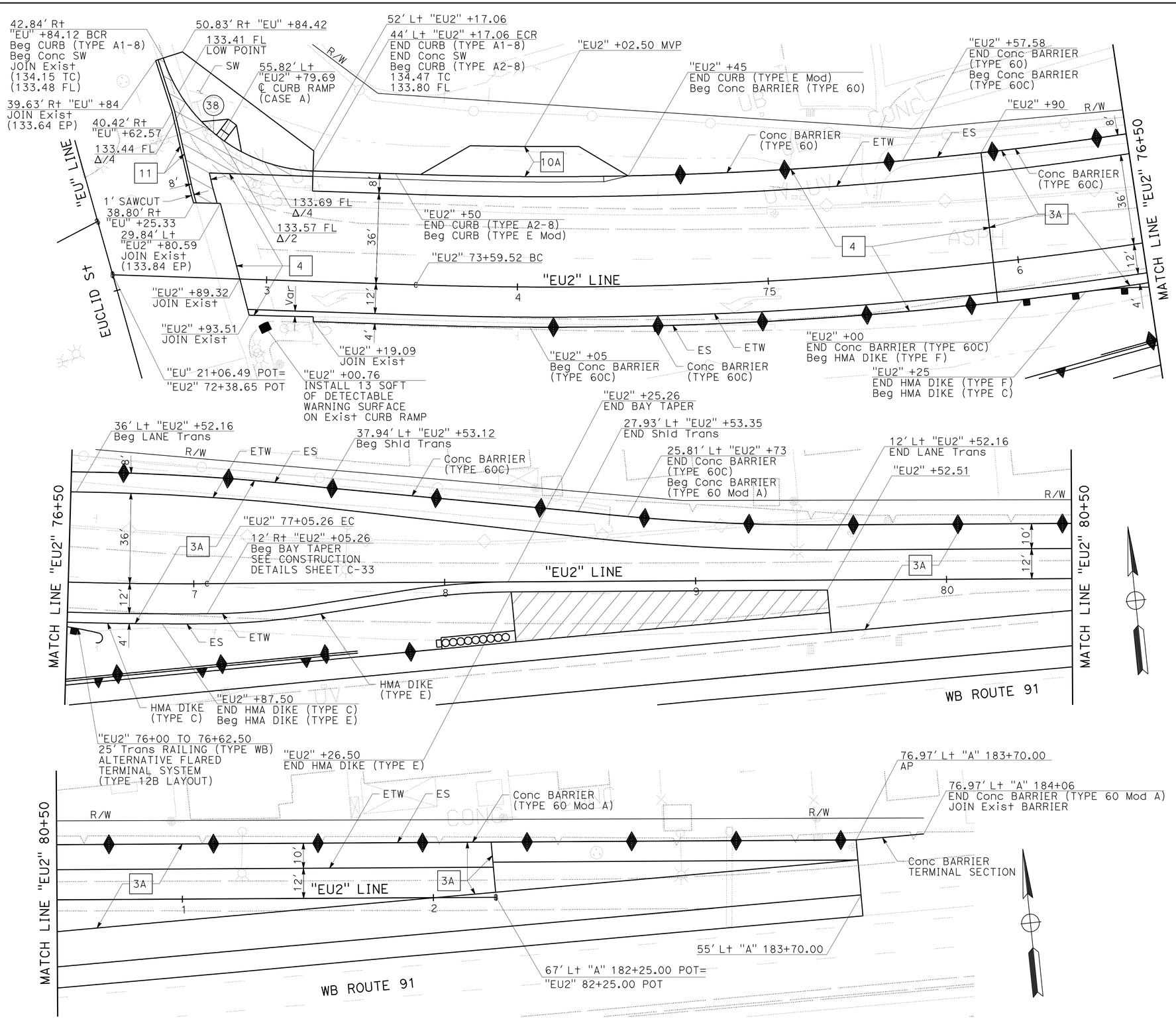

NOTES:

1. FOR CURB AND DIKE TRANSITIONS AND DETAILS, SEE CONSTRUCTION DETAILS SHEET C-31 & C-32.
2. FOR STRUCTURAL PAVEMENT SECTION TYPES, SEE TYPICAL CROSS SECTIONS SHEET X-1.
3. FOR MAINTENANCE VEHICLE PULLOUT (MVP) DETAILS, SEE CONSTRUCTION DETAILS SHEET C-32.
4. FOR MAINLINE DETAILS, SEE LAYOUT SHEETS.
5. FOR MINOR Conc (GUTTER) DETAILS, SEE CONSTRUCTION DETAILS SHEET C-39.
6. FOR Conc BARRIER TERMINAL SECTION, SEE CONSTRUCTION DETAILS SHEET C-37.

LEGEND THIS SHEET:

MINOR Conc (PATTERNED)

MINOR Conc (GUTTER)

CURVE DATA

No. (X)	R	Δ	T	L
38	65.00'	19°48'33"	45.68'	79.63'

CONSTRUCTION DETAILS
(RAMP "EU2" DETAILS)

SCALE: 1" = 20'

C-21

STATE OF CALIFORNIA - DEPARTMENT OF TRANSPORTATION

Caltrans

CONSULTANT FUNCTIONAL SUPERVISOR: MIKE CHESNEY

CALCULATED-DESIGNED BY: STEVEN NGUYEN

CHECKED BY: JOSUE VAGLIENTY

REVISED BY / DATE REVISED

LAST REVISION 06-08-10 | DATE PLOTTED => 13-AUG-2012 | TIME PLOTTED => 12:50

Dist	COUNTY	ROUTE	POST MILES TOTAL PROJECT	SHEET No.	TOTAL SHEETS
12	Ora	91	0.9/5.4	77	885

REGISTERED CIVIL ENGINEER 6/21/12 DATE

8-13-12
PLANS APPROVAL DATE

REGISTERED PROFESSIONAL ENGINEER JOSUE J. VAGLIENTY No. 70783 Exp. 6-30-13 CIVIL STATE OF CALIFORNIA

THE STATE OF CALIFORNIA OR ITS OFFICERS OR AGENTS SHALL NOT BE RESPONSIBLE FOR THE ACCURACY OR COMPLETENESS OF SCANNED COPIES OF THIS PLAN SHEET.

RBF CONSULTING
14725 ALTON PKWY
IRVINE, CA 92618

OCTA
550 S. MAIN STREET
ORANGE, CA 92863

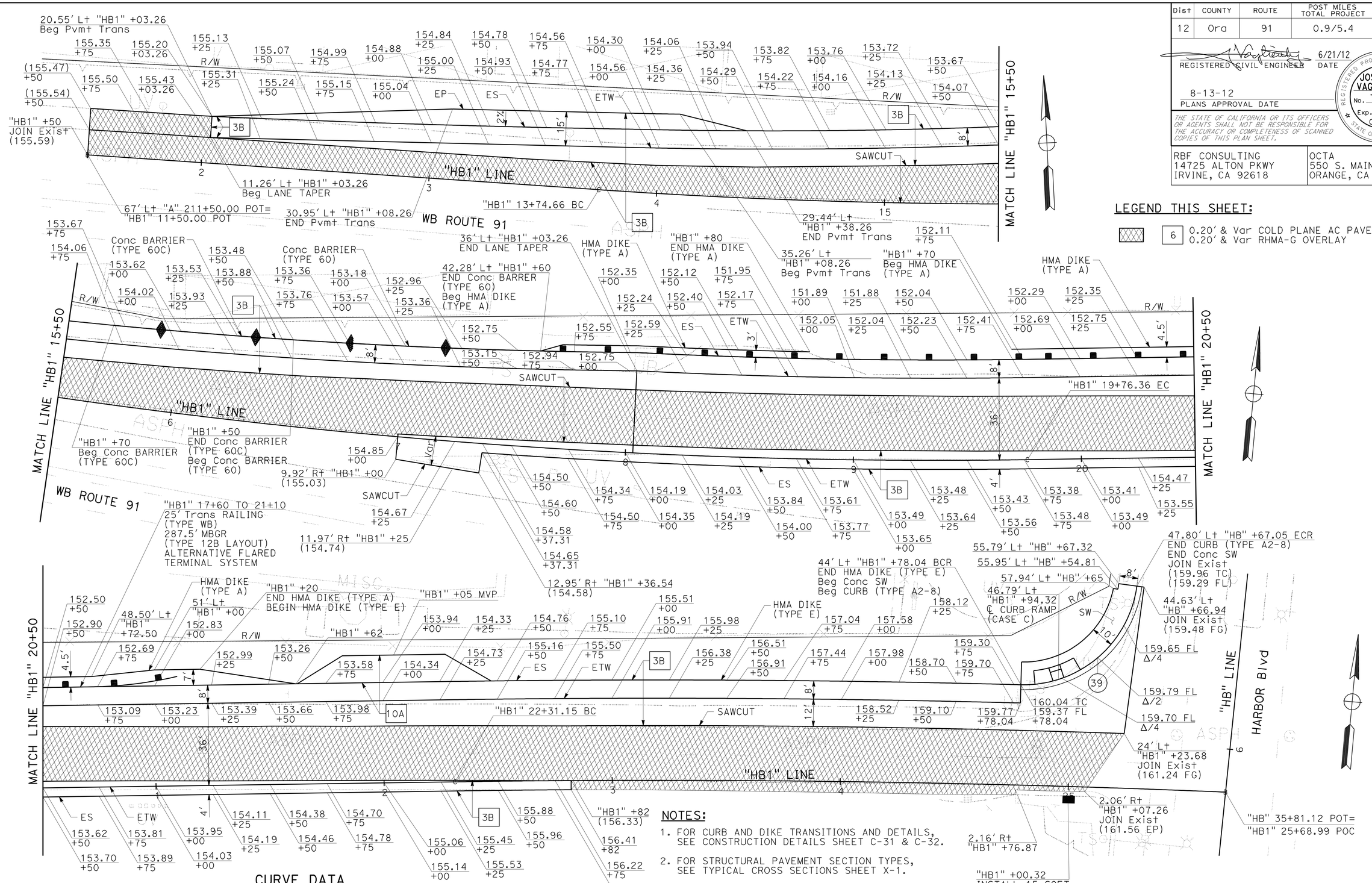

LEGEND THIS SHEET:

6 — 0.20' & Var COLD PLANE AC PAVEMENT
0.20' & Var RHMA-G OVERLAY

CURVE DATA

No. (X)	R	Δ	T	L
39	50.00'	06°14'01"	44.84'	73.10'

NOTES:

1. FOR CURB AND DIKE TRANSITIONS AND DETAILS, SEE CONSTRUCTION DETAILS SHEET C-31 & C-32.
2. FOR STRUCTURAL PAVEMENT SECTION TYPES, SEE TYPICAL CROSS SECTIONS SHEET X-1.
3. FOR MAINTENANCE VEHICLE PULLOUT (MVP) DETAILS, SEE CONSTRUCTION DETAILS SHEET C-32.
4. FOR MAINLINE DETAILS, SEE LAYOUT SHEETS.
5. FOR Conc BARRIER TRANSITIONS, SEE CONSTRUCTION DETAILS SHEET C-36.

CONSTRUCTION DETAILS
(RAMP "HB1" DETAILS)

SCALE: 1" = 20'

C-22

STATE OF CALIFORNIA - DEPARTMENT OF TRANSPORTATION
Caltrans

CONSULTANT FUNCTIONAL SUPERVISOR: MIKE CHESNEY
CALCULATED-DESIGNED BY: STEVEN NGUYEN
CHECKED BY: JOSUE VAGLIENTY
REVISED BY / DATE REVISED

LAST REVISION 06-08-10 | DATE PLOTTED => 17-AUG-2012 | TIME PLOTTED => 06:36

Dist	COUNTY	ROUTE	POST MILES TOTAL PROJECT	SHEET No.	TOTAL SHEETS
12	Ora	91	0.9/5.4	78	885

REGISTERED CIVIL ENGINEER 3/7/12 DATE

8-13-12
PLANS APPROVAL DATE

REGISTERED PROFESSIONAL ENGINEER JOSUE J. VAGLIENTY No. 70783 Exp. 6-30-13 CIVIL STATE OF CALIFORNIA

THE STATE OF CALIFORNIA OR ITS OFFICERS OR AGENTS SHALL NOT BE RESPONSIBLE FOR THE ACCURACY OR COMPLETENESS OF SCANNED COPIES OF THIS PLAN SHEET.

RBF CONSULTING
14725 ALTON PKWY
IRVINE, CA 92618

OCTA
550 S. MAIN STREET
ORANGE, CA 92863

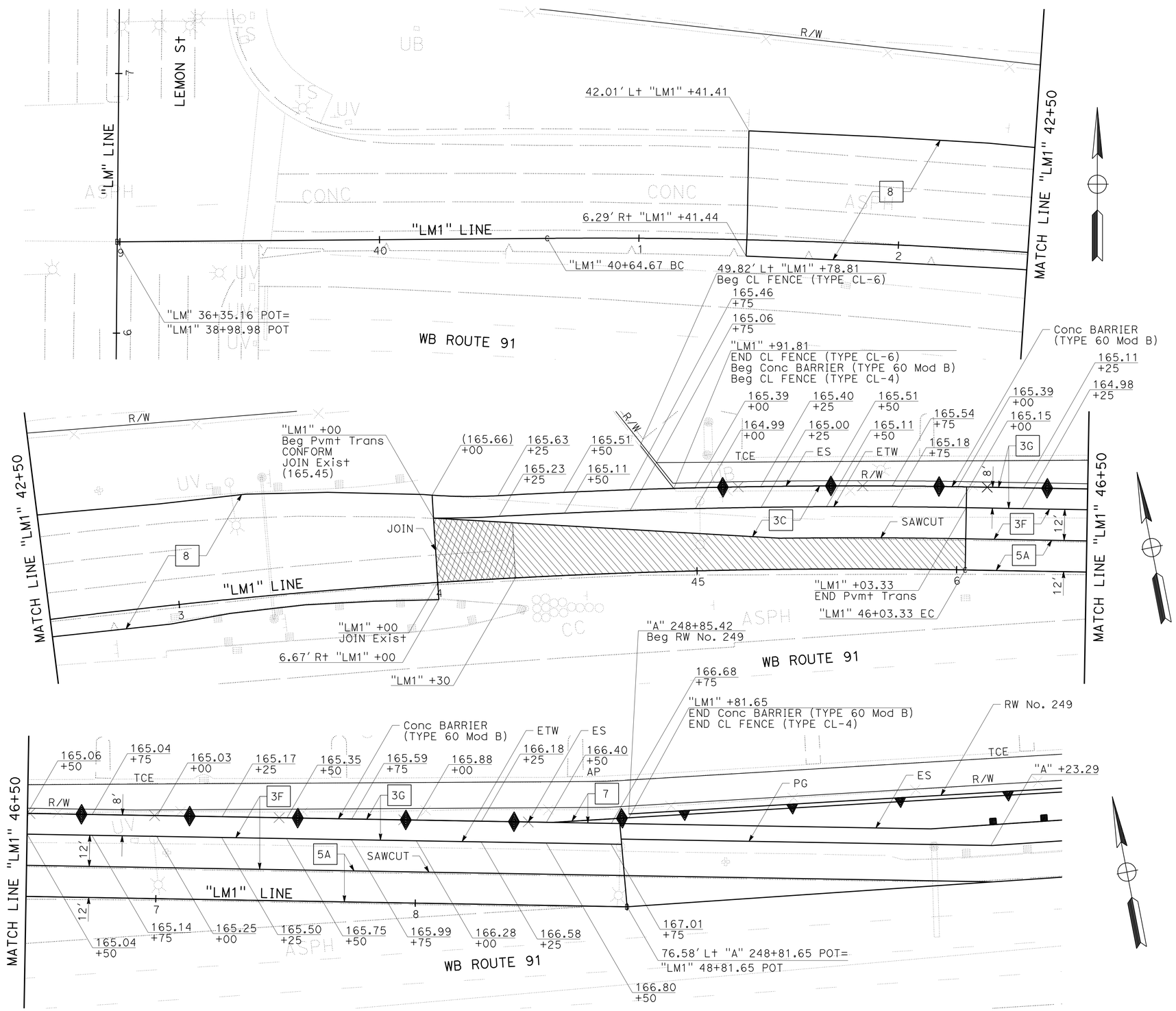

NOTES:

1. FOR CURB AND DIKE TRANSITIONS AND DETAILS, SEE CONSTRUCTION DETAILS SHEETS C-31 & C-32.
2. FOR STRUCTURAL PAVEMENT SECTION TYPES, SEE TYPICAL CROSS SECTIONS SHEET X-1.
3. FOR MAINLINE DETAILS, SEE LAYOUT SHEETS.
4. FOR PAVEMENT TRANSITION DETAILS, SEE CONSTRUCTION DETAILS SHEET C-39.

LEGEND THIS SHEET:

- 5 — 0.20' & Var HMA (TYPE A) OVERLAY
- 6 — 0.20' & Var COLD PLANE AC PAVEMENT; 0.20' & Var RHMA-G OVERLAY

CONSTRUCTION DETAILS
(RAMP "LM1" DETAILS)

SCALE: 1" = 20'

C-23

STATE OF CALIFORNIA - DEPARTMENT OF TRANSPORTATION

CONSULTANT FUNCTIONAL SUPERVISOR: MIKE CHESNEY

CALCULATED-DESIGNED BY: STEVEN NGUYEN | CHECKED BY: JOSUE VAGLIENTY

REVISED BY | DATE REVISED

LAST REVISION 06-08-10 | DATE PLOTTED => 13-AUG-2012 | TIME PLOTTED => 13:03

Dist	COUNTY	ROUTE	POST MILES TOTAL PROJECT	SHEET No.	TOTAL SHEETS
12	Ora	91	0.9/5.4	79	885

REGISTERED CIVIL ENGINEER 3/7/12 DATE

8-13-12
PLANS APPROVAL DATE

REGISTERED PROFESSIONAL ENGINEER JOSUE J. VAGLIENTY No. 70783 Exp. 6-30-13 CIVIL STATE OF CALIFORNIA

THE STATE OF CALIFORNIA OR ITS OFFICERS OR AGENTS SHALL NOT BE RESPONSIBLE FOR THE ACCURACY OR COMPLETENESS OF SCANNED COPIES OF THIS PLAN SHEET.

RBF CONSULTING
14725 ALTON PKWY
IRVINE, CA 92618

OCTA
550 S. MAIN STREET
ORANGE, CA 92863

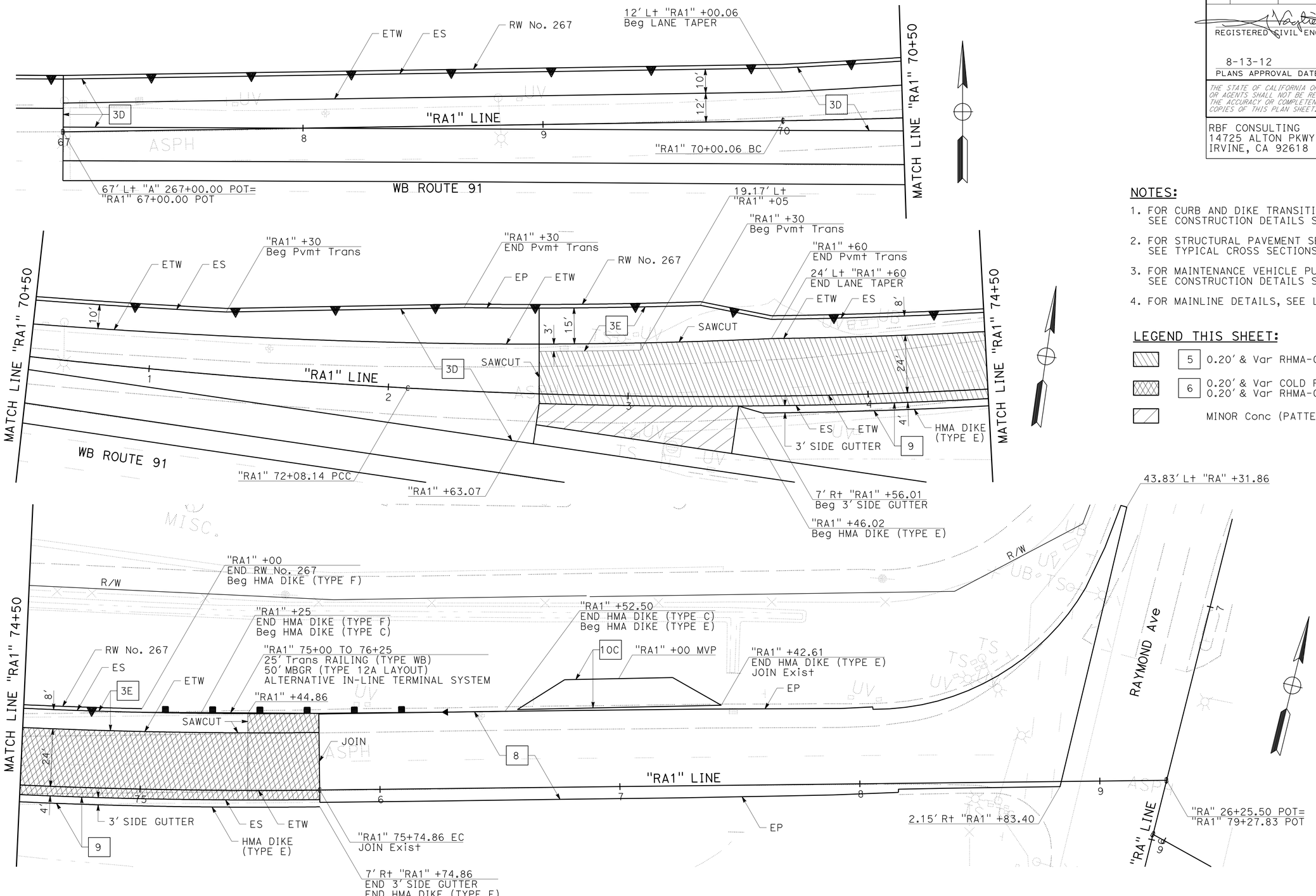

NOTES:

1. FOR CURB AND DIKE TRANSITIONS AND DETAILS, SEE CONSTRUCTION DETAILS SHEET C-31 & C-32.
2. FOR STRUCTURAL PAVEMENT SECTION TYPES, SEE TYPICAL CROSS SECTIONS SHEET X-1.
3. FOR MAINTENANCE VEHICLE PULLOUT (MVP) DETAILS, SEE CONSTRUCTION DETAILS SHEET C-32.
4. FOR MAINLINE DETAILS, SEE LAYOUT SHEETS.

LEGEND THIS SHEET:

- 5 — 0.20' & Var RHMA-G OVERLAY
- 6 — 0.20' & Var COLD PLANE AC PAVEMENT; 0.20' & Var RHMA-G OVERLAY
- MINOR Conc (PATTERNED)

CONSTRUCTION DETAILS
(RAMP "RA1" DETAILS)

SCALE: 1" = 20'

C-24

STATE OF CALIFORNIA - DEPARTMENT OF TRANSPORTATION
Caltrans

CONSULTANT FUNCTIONAL SUPERVISOR: MIKE CHESNEY
CALCULATED-DESIGNED BY: JOSUE VAGLIENTY
CHECKED BY: STEVEN NGUYEN
REVISED BY
DATE REVISED

LAST REVISION 06-08-10
DATE PLOTTED => 13-AUG-2012
TIME PLOTTED => 12:50

Dist	COUNTY	ROUTE	POST MILES TOTAL PROJECT	SHEET No.	TOTAL SHEETS
12	Ora	91	0.9/5.4	80	885

REGISTERED CIVIL ENGINEER 6/21/12 DATE

8-13-12
PLANS APPROVAL DATE

REGISTERED PROFESSIONAL ENGINEER JOSUE J. VAGLIENTY No. 70783 Exp. 6-30-13 CIVIL STATE OF CALIFORNIA

THE STATE OF CALIFORNIA OR ITS OFFICERS OR AGENTS SHALL NOT BE RESPONSIBLE FOR THE ACCURACY OR COMPLETENESS OF SCANNED COPIES OF THIS PLAN SHEET.

RBF CONSULTING
14725 ALTON PKWY
IRVINE, CA 92618

OCTA
550 S. MAIN STREET
ORANGE, CA 92863

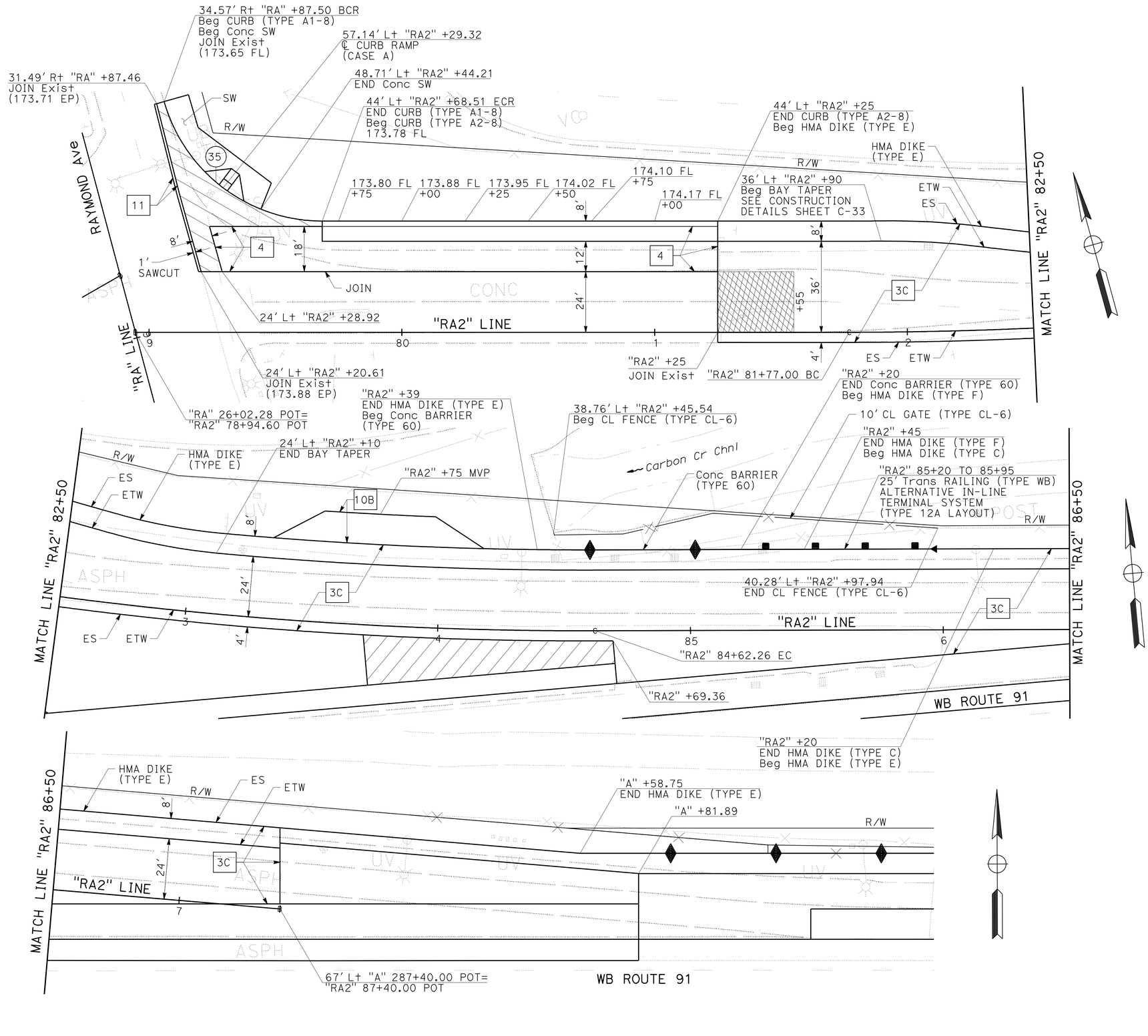

CURVE DATA

No. (X)	R	Δ	T	L
35	65.00'	74°09'44"	49.13'	84.13'

NOTES:

1. FOR CURB AND DIKE TRANSITIONS AND DETAILS, SEE CONSTRUCTION DETAILS SHEETS C-31 & C-32.
2. FOR STRUCTURAL PAVEMENT SECTION TYPES, SEE TYPICAL CROSS SECTIONS SHEET X-1.
3. FOR MAINTENANCE VEHICLE PULLOUT (MVP) DETAILS, SEE CONSTRUCTION DETAILS SHEET C-32.
4. FOR MAINLINE DETAILS, SEE LAYOUT SHEETS.
5. FOR MINOR Conc (GUTTER) DETAILS, SEE CONSTRUCTION DETAILS SHEET C-39.

LEGEND THIS SHEET:

- 6 — 0.20' & Var COLD PLANE AC PAVEMENT; 0.20' & Var RHMA-G OVERLAY
- MINOR Conc (PATTERNED)
- MINOR Conc (GUTTER)

CONSTRUCTION DETAILS
(RAMP "RA2" DETAILS)

SCALE: 1" = 20'

C-25

STATE OF CALIFORNIA - DEPARTMENT OF TRANSPORTATION
Caltrans

CONSULTANT FUNCTIONAL SUPERVISOR: MIKE CHESNEY
CALCULATED-DESIGNED BY: STEVEN NGUYEN
CHECKED BY: JOSUE VAGLIENTY
REVISED BY
DATE REVISED

LAST REVISION 06-08-10
DATE PLOTTED => 17-AUG-2012
TIME PLOTTED => 06:36

Dist	COUNTY	ROUTE	POST MILES TOTAL PROJECT	SHEET No.	TOTAL SHEETS
12	Ora	91	0.9/5.4	81	885

REGISTERED CIVIL ENGINEER 3/7/12 DATE

8-13-12
PLANS APPROVAL DATE

REGISTERED PROFESSIONAL ENGINEER JOSUE J. VAGLIENTY No. 70783 Exp. 6-30-13 CIVIL STATE OF CALIFORNIA

THE STATE OF CALIFORNIA OR ITS OFFICERS OR AGENTS SHALL NOT BE RESPONSIBLE FOR THE ACCURACY OR COMPLETENESS OF SCANNED COPIES OF THIS PLAN SHEET.

RBF CONSULTING
14725 ALTON PKWY
IRVINE, CA 92618

OCTA
550 S. MAIN STREET
ORANGE, CA 92863

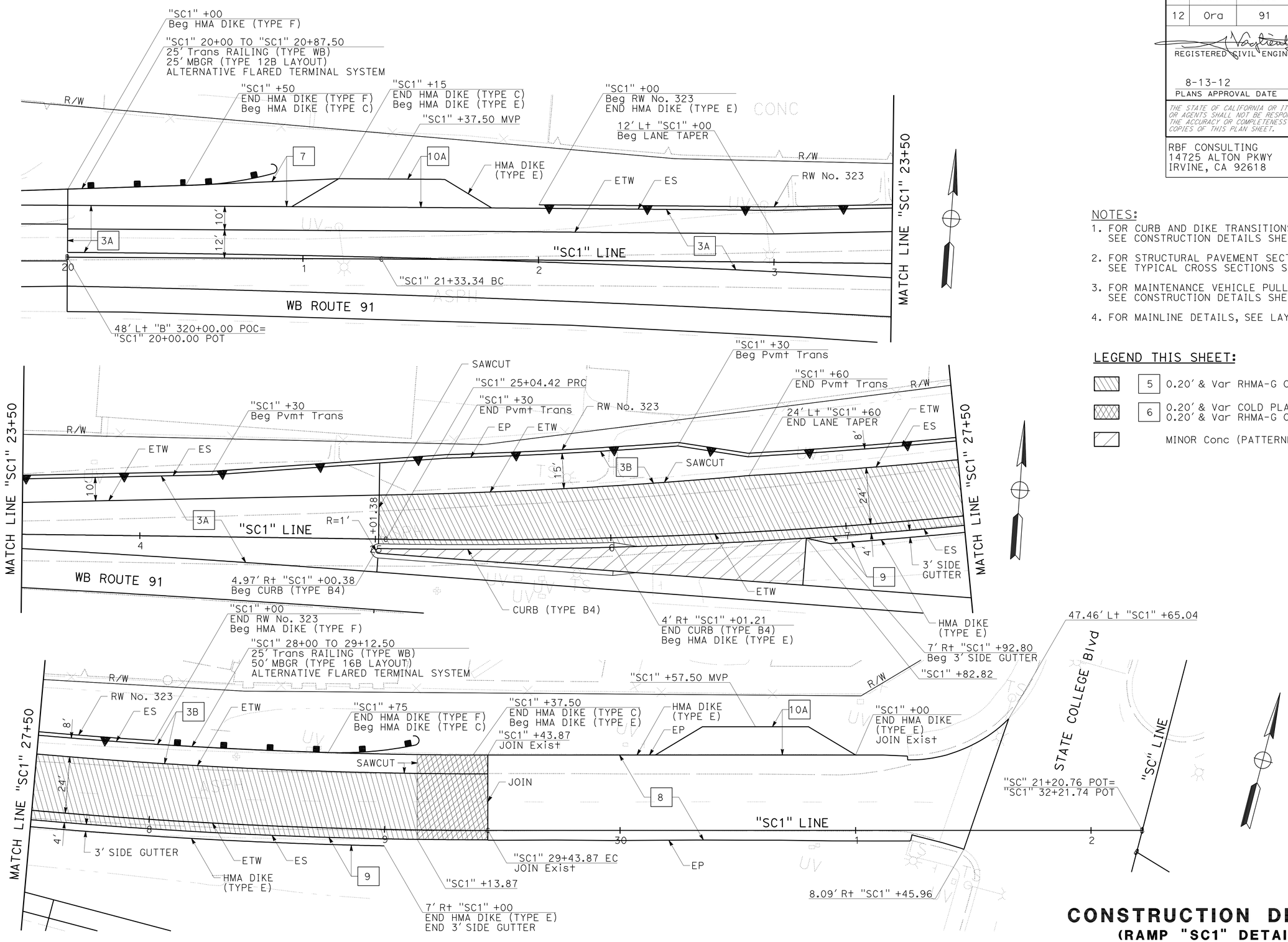

NOTES:

1. FOR CURB AND DIKE TRANSITIONS AND DETAILS, SEE CONSTRUCTION DETAILS SHEETS C-31 & C-32.
2. FOR STRUCTURAL PAVEMENT SECTION TYPES, SEE TYPICAL CROSS SECTIONS SHEET X-1.
3. FOR MAINTENANCE VEHICLE PULLOUT (MVP) DETAILS, SEE CONSTRUCTION DETAILS SHEET C-32.
4. FOR MAINLINE DETAILS, SEE LAYOUT SHEETS.

LEGEND THIS SHEET:

- 5 — 0.20' & Var RHMA-G OVERLAY
- 6 — 0.20' & Var COLD PLANE AC PAVEMENT; 0.20' & Var RHMA-G OVERLAY
- MINOR Conc (PATTERNED)

CONSTRUCTION DETAILS
(RAMP "SC1" DETAILS)

SCALE: 1" = 20'

C-26

STATE OF CALIFORNIA - DEPARTMENT OF TRANSPORTATION

STEVEN NGUYEN | JOSUE VAGLIENTY | MIKE CHESNEY

REVISED BY | DATE REVISED | CALCULATED-DESIGNED BY | CHECKED BY | CONSULTANT FUNCTIONAL SUPERVISOR

LAST REVISION 06-08-10 | DATE PLOTTED => 13-AUG-2012 | TIME PLOTTED => 12:54

Dist	COUNTY	ROUTE	POST MILES TOTAL PROJECT	SHEET No.	TOTAL SHEETS
12	Ora	91	0.9/5.4	82	885

REGISTERED CIVIL ENGINEER 3/7/12 DATE

8-13-12
PLANS APPROVAL DATE

REGISTERED PROFESSIONAL ENGINEER JOSUE J. VAGLIENTY No. 70783 Exp. 6-30-13 CIVIL STATE OF CALIFORNIA

THE STATE OF CALIFORNIA OR ITS OFFICERS OR AGENTS SHALL NOT BE RESPONSIBLE FOR THE ACCURACY OR COMPLETENESS OF SCANNED COPIES OF THIS PLAN SHEET.

RBF CONSULTING
14725 ALTON PKWY
IRVINE, CA 92618

OCTA
550 S. MAIN STREET
ORANGE, CA 92863

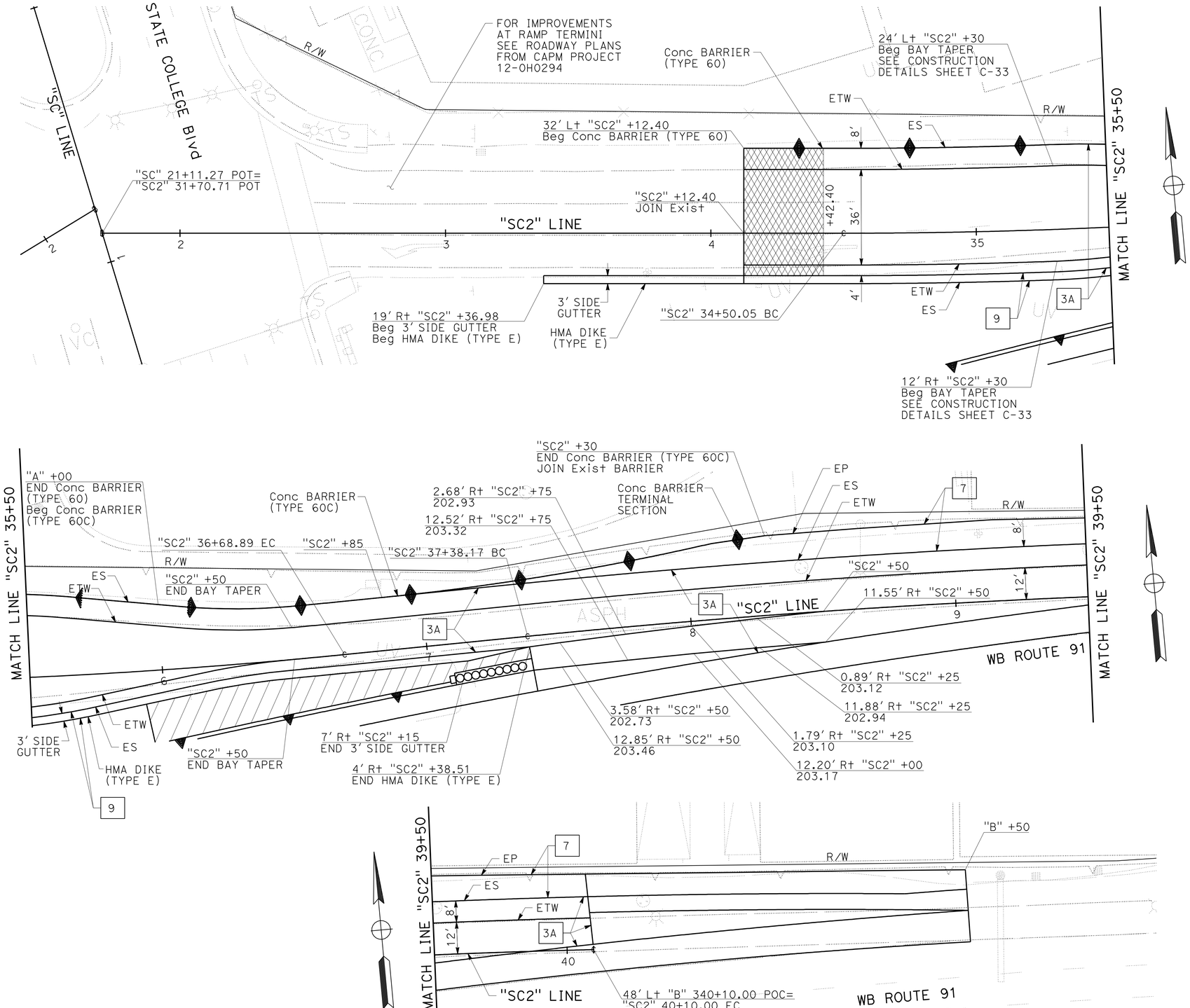

NOTES:

1. FOR CURB AND DIKE TRANSITIONS AND DETAILS, SEE CONSTRUCTION DETAILS SHEETS C-31 & C-32.
2. FOR STRUCTURAL PAVEMENT SECTION TYPES, SEE TYPICAL CROSS SECTIONS SHEET X-1.
3. FOR MAINLINE DETAILS, SEE LAYOUT SHEETS.
4. FOR Conc BARRIER TERMINAL SECTION, SEE CONSTRUCTION DETAILS SHEET C-37.

LEGEND THIS SHEET:

- 6 — 0.20' & Var COLD PLANE AC PAVEMENT; 0.20' & Var RHMA-G OVERLAY
- MINOR Conc (PATTERNED)

CONSTRUCTION DETAILS
(RAMP "SC2" DETAILS)

SCALE: 1" = 20'

C-27

STATE OF CALIFORNIA - DEPARTMENT OF TRANSPORTATION
Caltrans

CONSULTANT FUNCTIONAL SUPERVISOR: MIKE CHESNEY
CALCULATED-DESIGNED BY: JOSUE VAGLIENTY
CHECKED BY: STEVEN NGUYEN
REVISED BY / DATE REVISED

LAST REVISION 06-08-10
DATE PLOTTED => 13-AUG-2012
TIME PLOTTED => 12:50

Dist	COUNTY	ROUTE	POST MILES TOTAL PROJECT	SHEET No.	TOTAL SHEETS
12	Ora	91	0.9/5.4	83	885

REGISTERED CIVIL ENGINEER 3/7/12 DATE

8-13-12
PLANS APPROVAL DATE

REGISTERED PROFESSIONAL ENGINEER JOSUE J. VAGLIENTY No. 70783 Exp. 6-30-13 CIVIL STATE OF CALIFORNIA

THE STATE OF CALIFORNIA OR ITS OFFICERS OR AGENTS SHALL NOT BE RESPONSIBLE FOR THE ACCURACY OR COMPLETENESS OF SCANNED COPIES OF THIS PLAN SHEET.

RBF CONSULTING
14725 ALTON PKWY
IRVINE, CA 92618

OCTA
550 S. MAIN STREET
ORANGE, CA 92863

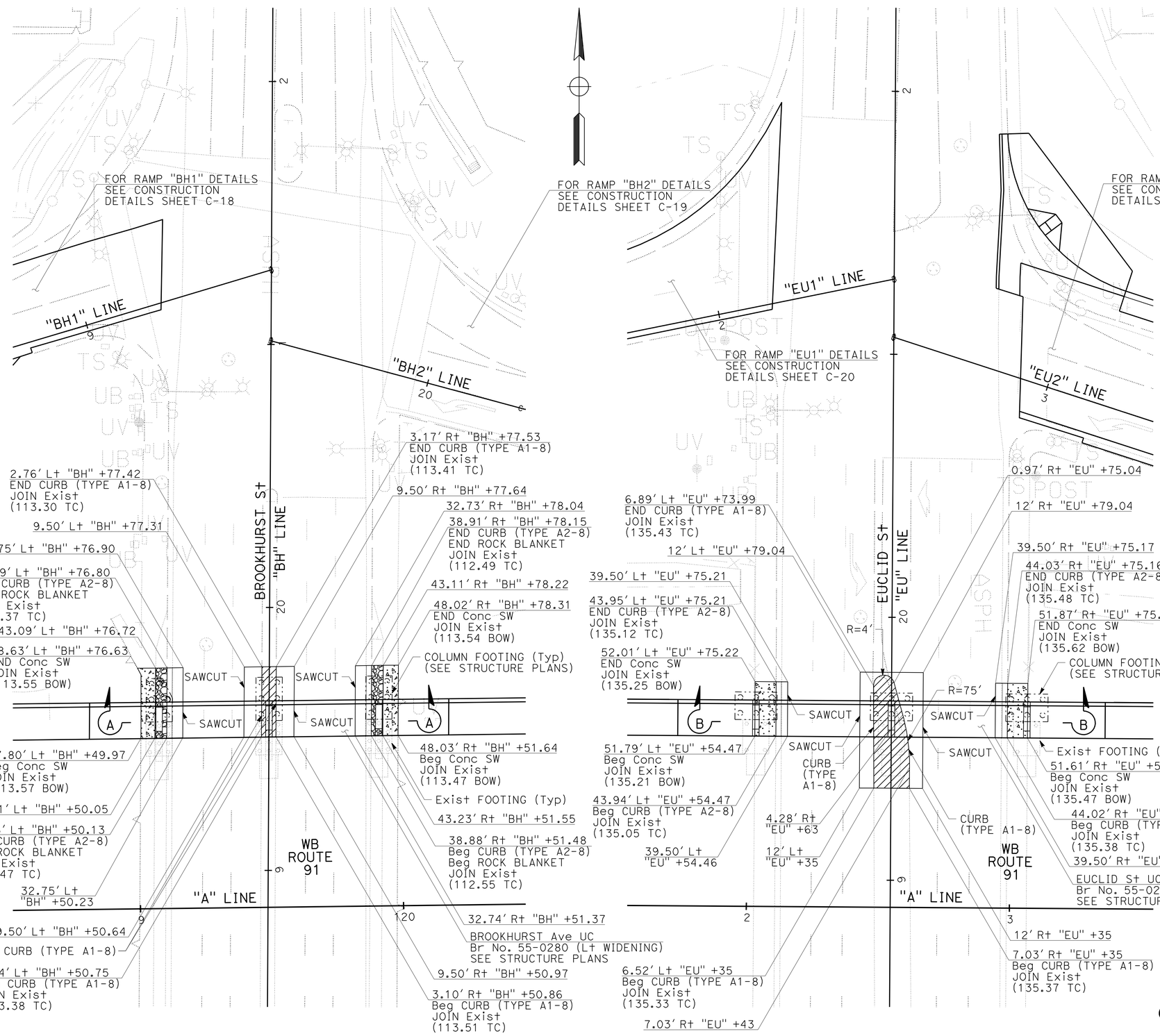

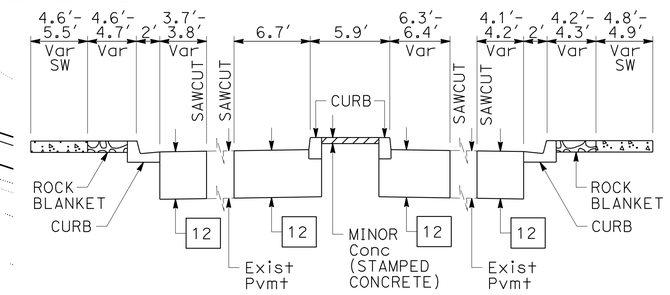

SECTION A-A
NO SCALE

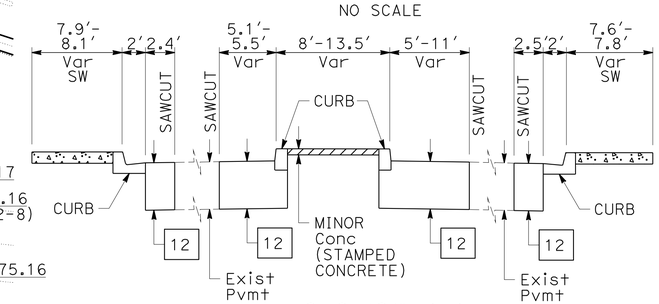

SECTION B-B
NO SCALE

NOTES:

1. FOR STRUCTURE INFORMATION AND DETAILS, SEE STRUCTURE PLANS.
2. FOR STRUCTURAL PAVEMENT SECTION TYPES, SEE TYPICAL CROSS SECTIONS SHEET X-1.
3. FOR MINOR Conc (STAMPED CONCRETE) DETAILS, SEE CONSTRUCTION DETAILS SHEET C-39. INSTALL ½" EXPANSION PAPER AROUND BRIDGE EXISTING COLUMNS.

LEGEND THIS SHEET:

- ROCK BLANKET
- MINOR Conc (STAMPED CONCRETE)
- MINOR Conc (SIDEWALK)

CONSTRUCTION DETAILS
(BROOKHURST St/EUCLID St DETAILS)

SCALE: 1" = 20'

C-28

SHN	08/23/11		
REVISED BY	DATE REVISED		
STEVEN NGUYEN	JOSUE VAGLIENTY		
CALCULATED-DESIGNED BY	CHECKED BY		
CONSULTANT FUNCTIONAL SUPERVISOR	MIKE CHESNEY		

STATE OF CALIFORNIA - DEPARTMENT OF TRANSPORTATION

Caltrans

LAST REVISION 06-08-10 | DATE PLOTTED => 17-AUG-2012 | TIME PLOTTED => 06:36

Dist	COUNTY	ROUTE	POST MILES TOTAL PROJECT	SHEET No.	TOTAL SHEETS
12	Ora	91	0.9/5.4	84	885

REGISTERED CIVIL ENGINEER 3/7/12 DATE

8-13-12
PLANS APPROVAL DATE

REGISTERED PROFESSIONAL ENGINEER JOSUE J. VAGLIENTY No. 70783 Exp. 6-30-13 CIVIL STATE OF CALIFORNIA

THE STATE OF CALIFORNIA OR ITS OFFICERS OR AGENTS SHALL NOT BE RESPONSIBLE FOR THE ACCURACY OR COMPLETENESS OF SCANNED COPIES OF THIS PLAN SHEET.

RBF CONSULTING
14725 ALTON PKWY
IRVINE, CA 92618

OCTA
550 S. MAIN STREET
ORANGE, CA 92863

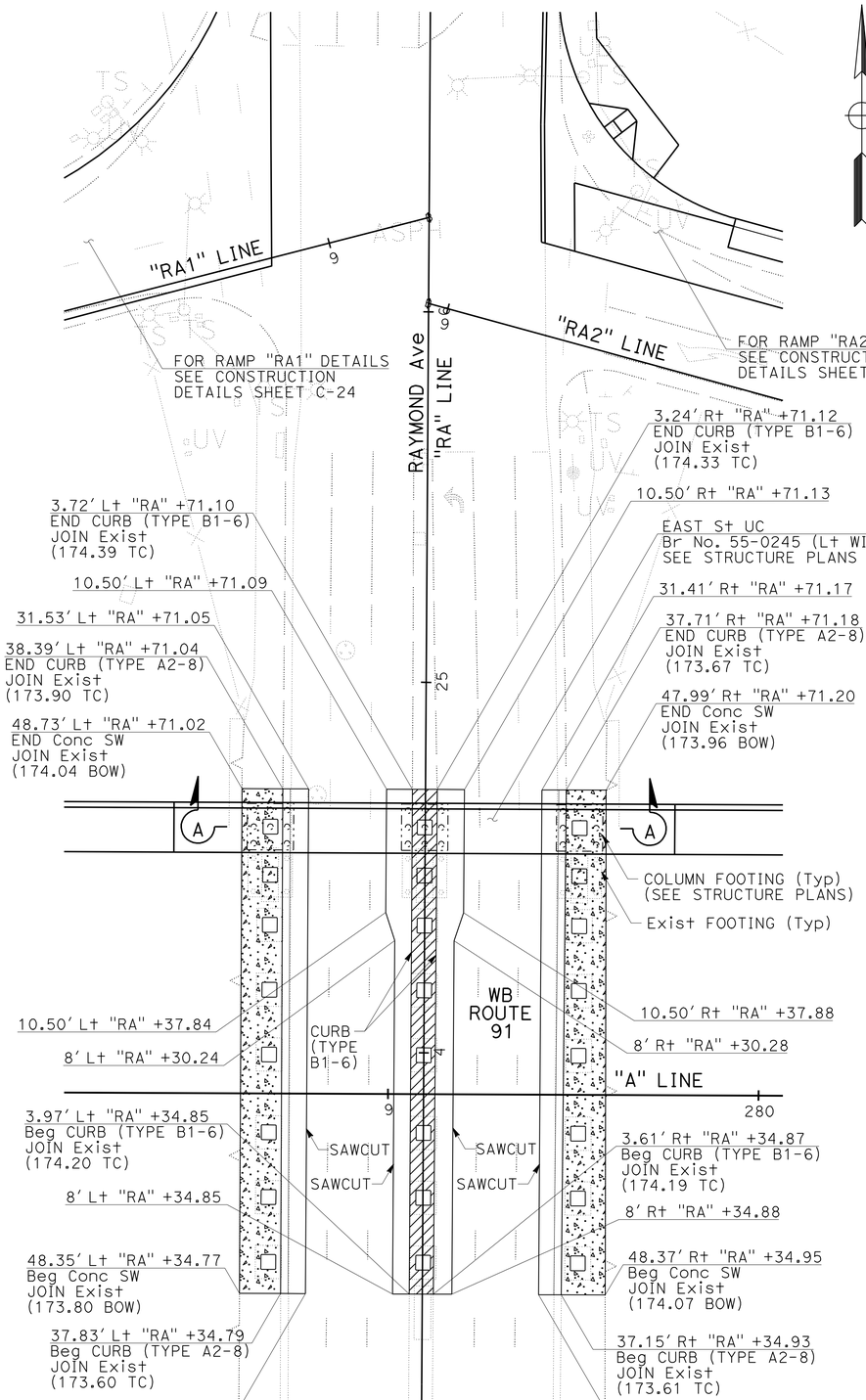

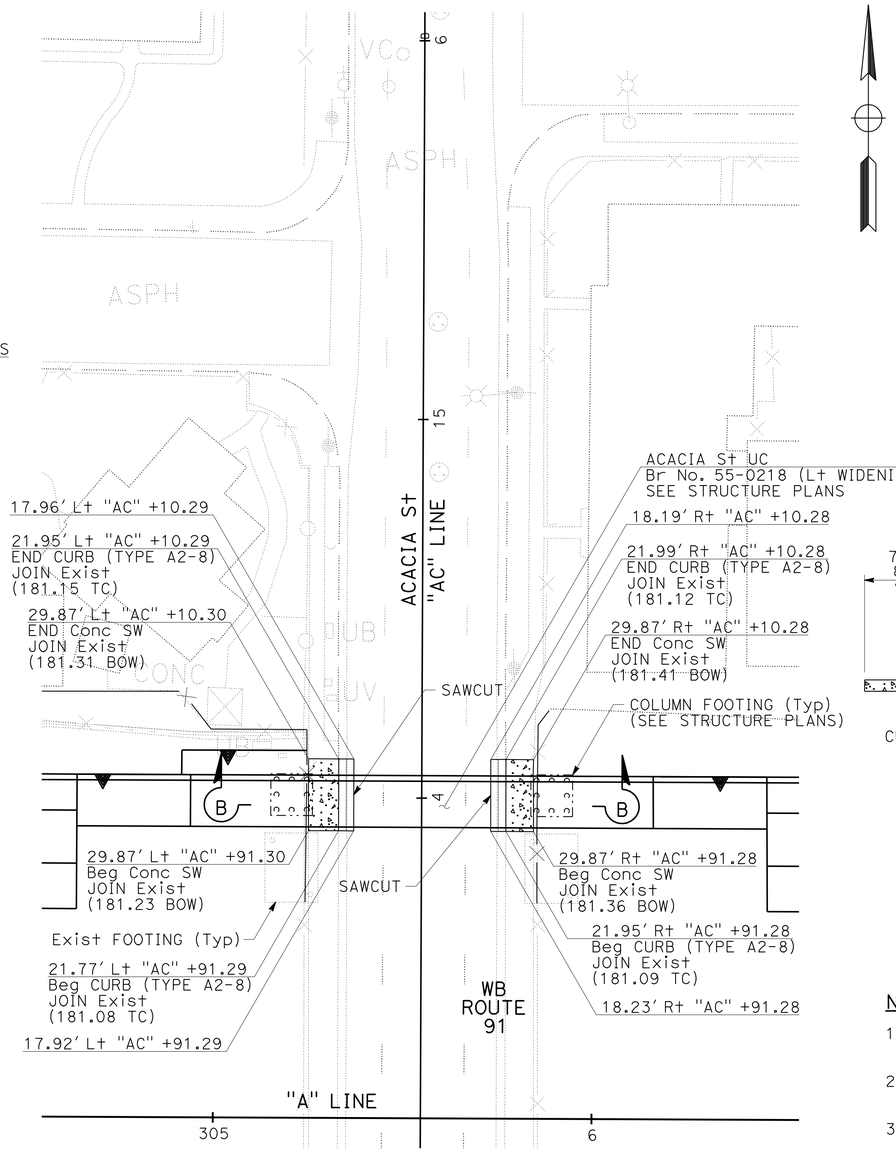

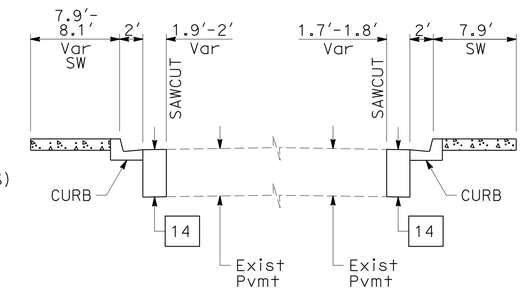

SECTION B-B
NO SCALE

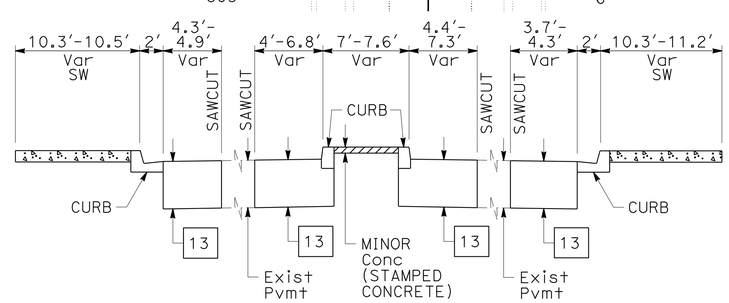

SECTION A-A
NO SCALE

NOTES:

1. FOR STRUCTURE INFORMATION AND DETAILS, SEE STRUCTURE PLANS.
2. FOR STRUCTURAL PAVEMENT SECTION TYPES, SEE TYPICAL CROSS SECTIONS SHEET X-1.
3. FOR MINOR Conc (STAMPED CONCRETE) DETAILS, SEE CONSTRUCTION DETAILS SHEET C-39. INSTALL ½" EXPANSION PAPER AROUND BRIDGE EXISTING COLUMNS.

LEGEND THIS SHEET:

- MINOR Conc (STAMPED CONCRETE)
- MINOR Conc (SIDEWALK)

CONSTRUCTION DETAILS
(RAYMOND Ave/ ACACIA St DETAILS)

SCALE: 1" = 20'

C-29

STATE OF CALIFORNIA - DEPARTMENT OF TRANSPORTATION
Caltrans
CONSULTANT FUNCTIONAL SUPERVISOR: MIKE CHESNEY
CALCULATED-DESIGNED BY: STEVEN NGUYEN
CHECKED BY: JOSUE VAGLIENTY
REVISED BY
DATE REVISED

LAST REVISION 06-08-10
DATE PLOTTED => 17-AUG-2012
TIME PLOTTED => 13:42

Dist	COUNTY	ROUTE	POST MILES TOTAL PROJECT	SHEET No.	TOTAL SHEETS
12	Ora	91	0.9/5.4	85	885

REGISTERED CIVIL ENGINEER 3/7/12 DATE

8-13-12
PLANS APPROVAL DATE

REGISTERED PROFESSIONAL ENGINEER JOSUE J. VAGLIENTY No. 70783 Exp. 6-30-13 CIVIL STATE OF CALIFORNIA

THE STATE OF CALIFORNIA OR ITS OFFICERS OR AGENTS SHALL NOT BE RESPONSIBLE FOR THE ACCURACY OR COMPLETENESS OF SCANNED COPIES OF THIS PLAN SHEET.

RBF CONSULTING
14725 ALTON PKWY
IRVINE, CA 92618

OCTA
550 S. MAIN STREET
ORANGE, CA 92863

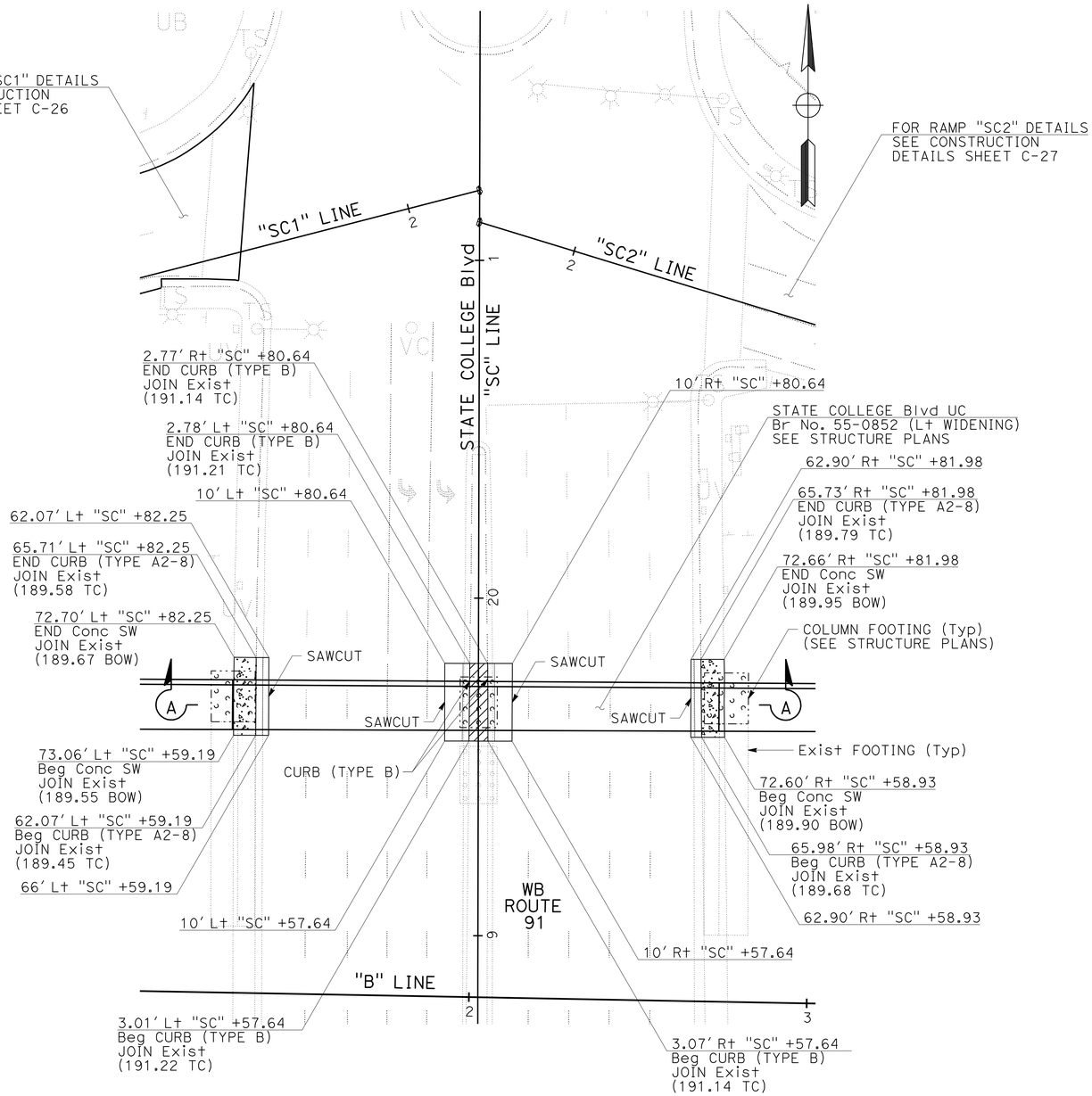

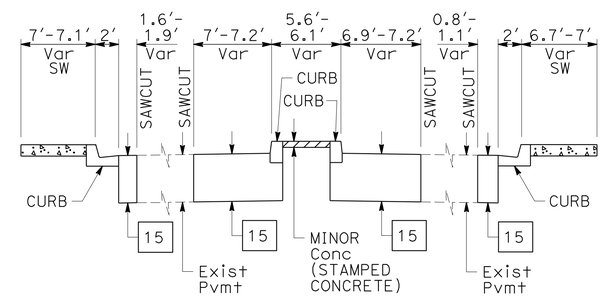

SECTION A-A
NO SCALE

NOTES:

1. FOR STRUCTURE INFORMATION AND DETAILS, SEE STRUCTURE PLANS.
2. FOR STRUCTURAL PAVEMENT SECTION TYPES, SEE TYPICAL CROSS SECTIONS SHEET X-1.
3. FOR MINOR Conc (STAMPED CONCRETE) DETAILS, SEE CONSTRUCTION DETAILS SHEET C-39. INSTALL ½" EXPANSION PAPER AROUND BRIDGE EXISTING COLUMNS.
4. FOR CURB (TYPE B) DETAILS, SEE CONSTRUCTION DETAILS SHEET C-31.

LEGEND THIS SHEET:

MINOR Conc (STAMPED CONCRETE)

MINOR Conc (SIDEWALK)

CONSTRUCTION DETAILS
(STATE COLLEGE Blvd DETAILS)

SCALE: 1" = 20'

C-30

STATE OF CALIFORNIA - DEPARTMENT OF TRANSPORTATION
Caltrans

CONSULTANT FUNCTIONAL SUPERVISOR: MIKE CHESNEY
CALCULATED-DESIGNED BY: JOSUE VAGLIENTY
CHECKED BY: STEVEN NGUYEN
REVISED BY
DATE REVISED

LAST REVISION 06-08-10
DATE PLOTTED => 17-AUG-2012
TIME PLOTTED => 13:42

Dist	COUNTY	ROUTE	POST MILES TOTAL PROJECT	SHEET No.	TOTAL SHEETS
12	Ora	91	0.9/5.4	86	885

REGISTERED CIVIL ENGINEER 3/7/12 DATE

8-13-12
PLANS APPROVAL DATE

REGISTERED PROFESSIONAL ENGINEER JOSUE J. VAGLIENTY No. 70783 Exp. 6-30-13 CIVIL STATE OF CALIFORNIA

THE STATE OF CALIFORNIA OR ITS OFFICERS OR AGENTS SHALL NOT BE RESPONSIBLE FOR THE ACCURACY OR COMPLETENESS OF SCANNED COPIES OF THIS PLAN SHEET.

RBF CONSULTING
14725 ALTON PKWY
IRVINE, CA 92618

OCTA
550 S. MAIN STREET
ORANGE, CA 92863

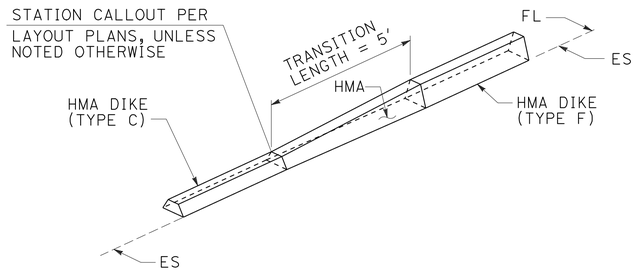

HMA DIKE (TYPE C) TO HMA DIKE (TYPE F)

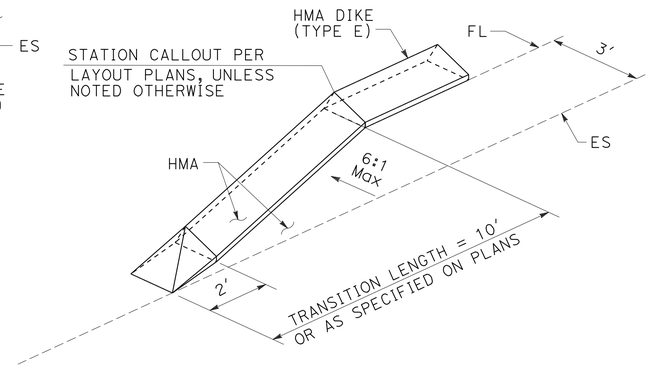

END DETAIL OF HMA DIKE (TYPE E) WITH SIDE GUTTER

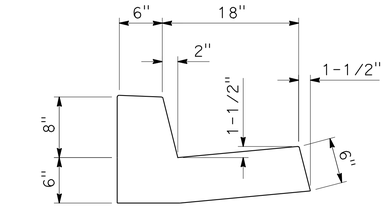

CURB (TYPE B)

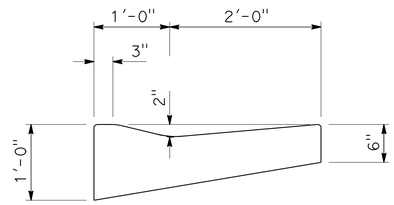

CURB (TYPE E Mod)

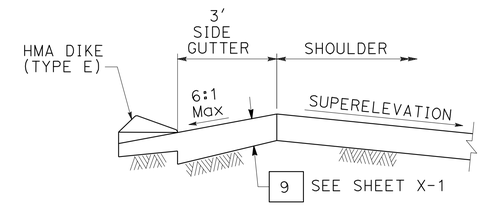

HMA DIKE (TYPE E) WITH SIDE GUTTER DETAIL

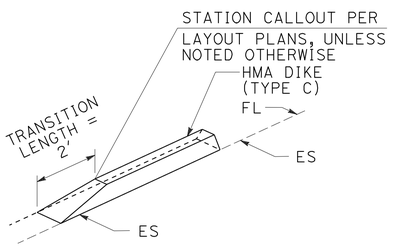

END DETAIL OF HMA DIKE (TYPE C OR TYPE A)

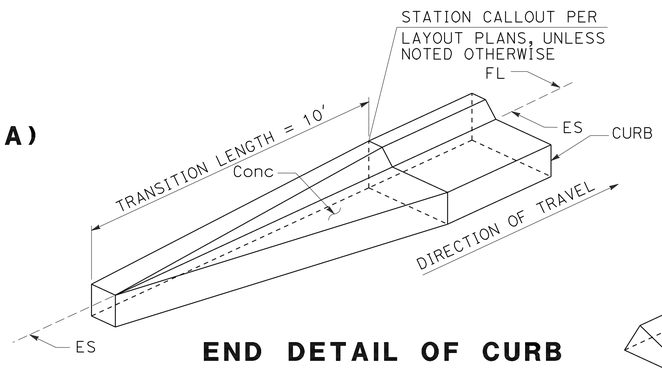

END DETAIL OF CURB

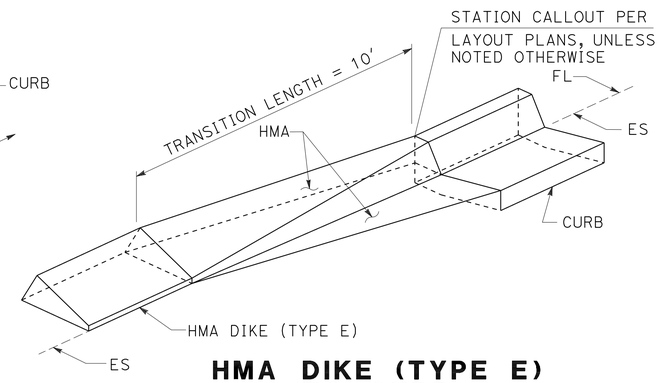

HMA DIKE (TYPE E) TO CURB

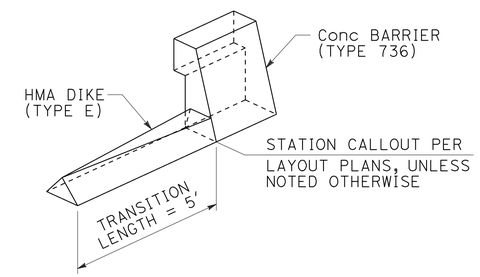

HMA DIKE (TYPE E) TO CONCRETE BARRIER (TYPE 736)

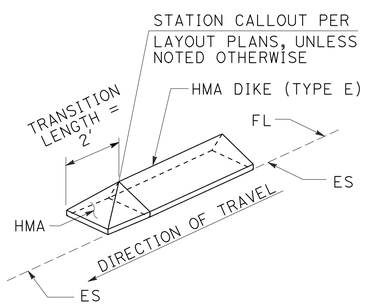

END DETAIL OF HMA DIKE (TYPE E)

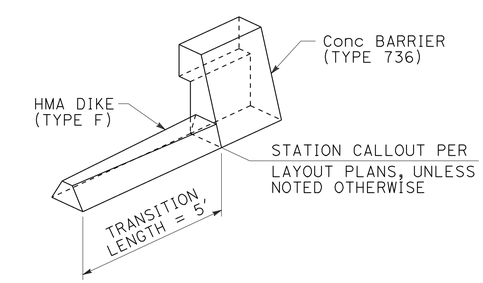

HMA DIKE (TYPE F) TO CONCRETE BARRIER (TYPE 736)

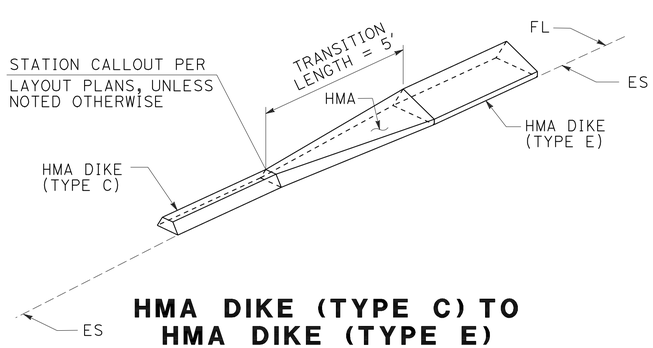

HMA DIKE (TYPE C) TO HMA DIKE (TYPE E)

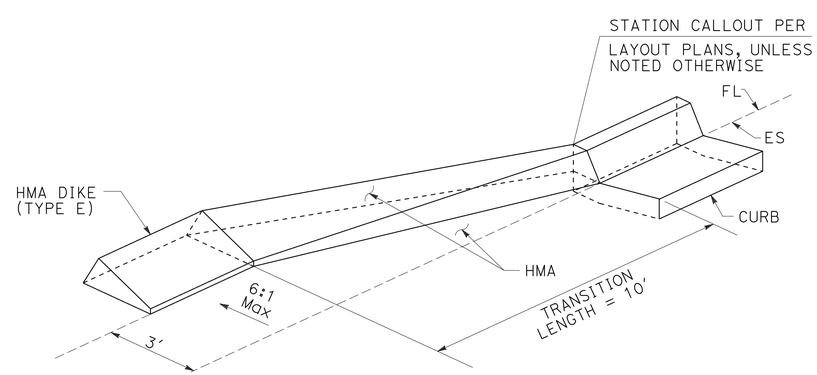

HMA DIKE (TYPE E) WITH SIDE GUTTER TO CURB

CONSTRUCTION DETAILS
(CURB AND HMA DIKE TRANSITIONS)

NO SCALE

C-31

STATE OF CALIFORNIA - DEPARTMENT OF TRANSPORTATION
Caltrans

CONSULTANT FUNCTIONAL SUPERVISOR: MIKE CHESNEY
CALCULATED-DESIGNED BY: REBECCA KELCHER
CHECKED BY: JOSUE VAGLIENTY
REVISED BY
DATE REVISED

LAST REVISION 06-08-10
DATE PLOTTED => 13-AUG-2012
TIME PLOTTED => 12:48

NOTE:
1. FOR STRUCTURAL PAVEMENT SECTION TYPES, SEE TYPICAL CROSS SECTIONS SHEET X-1.

MVP LOCATION TABLE

LINE	STATION, OFFSET	HMA DIKE TYPE	L1	L2	L3	W	STRUCTURAL SECTION TYPE
"BH1"	18+30, 17' R+	TYPE E	45'	20'	20'	12'	10B
"A"	118+07.50, 89' L+	TYPE E	65'	20'	0'	12'	10B
"A"	166+73.32, 89.32' L+	TYPE E	113.5'	20'	0'	12'	10A
"EU2"	74+02.50, 56' L+	CURB (TYPE E Mod)	45'	20'	20'	12'	10A
"HB1"	22+05, 56' L+	TYPE E	45'	20'	20'	12'	10A
"A"	263+42.50, 101' L+	TYPE E	45'	240'	20'	12'	10A
"RA1"	77+00, 45' L+	TYPE E	45'	20'	20'	12'	10C
"A"	277+62.50, 89' L+	TYPE E	65'	20'	0'	12'	10B
"A"	282+02.50, 89' L+	TYPE E	45'	20'	20'	12'	10B
"RA2"	83+75, 44' L+	TYPE E	45'	20'	20'	12'	10B
"SC1"	21+37.50, 34' L+	NONE	45'	20'	20'	12'	10A
"SC1"	30+57.50, 44' L+	TYPE E	45'	20'	20'	12'	10A
"B"	330+47.50, 70' L+	TYPE E	65'	20'	0'	12'	10A

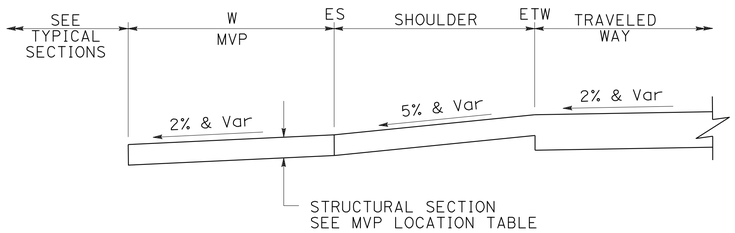

MAINTENANCE VEHICLE PULLOUT (MVP) WITHOUT HMA DIKE

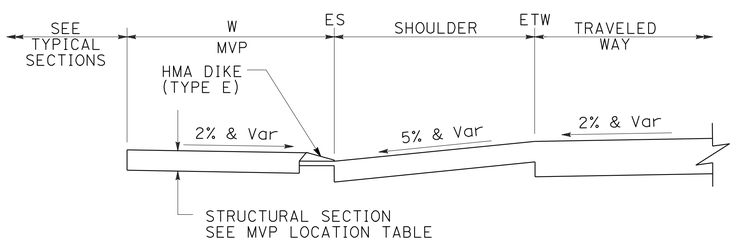

MAINTENANCE VEHICLE PULLOUT (MVP) WITH HMA DIKE

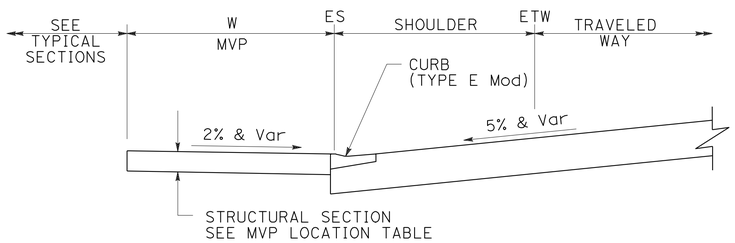

MAINTENANCE VEHICLE PULLOUT (MVP) WITH CURB

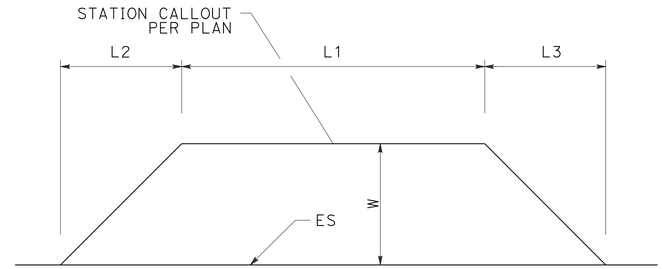

MAINTENANCE VEHICLE PULLOUT (MVP) PLAN

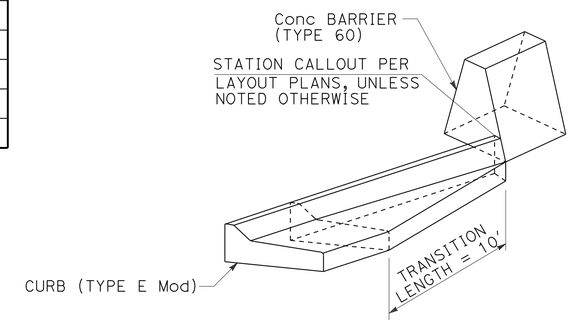

CURB (TYPE E Mod) TO CONCRETE BARRIER (TYPE 60)

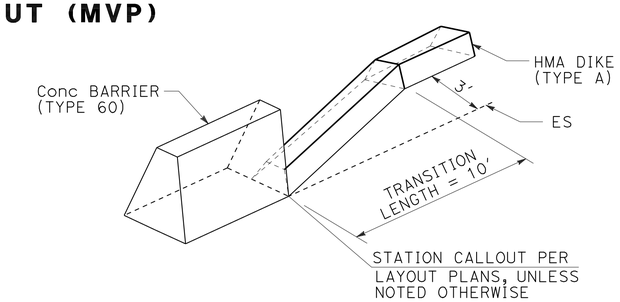

CONCRETE BARRIER (TYPE 60) TO HMA DIKE (TYPE A)

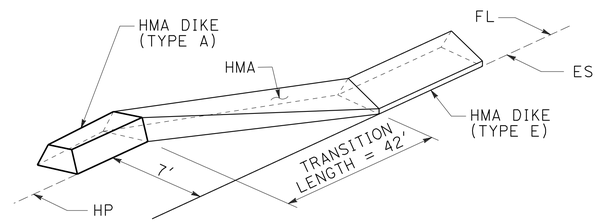

HMA DIKE (TYPE A) TO HMA DIKE (TYPE E)

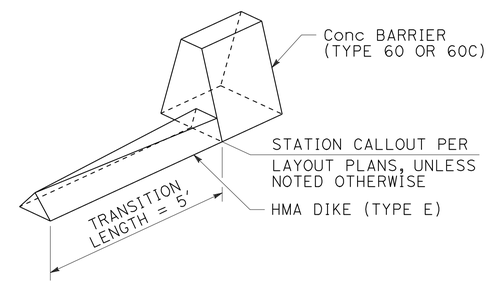

HMA DIKE (TYPE E) TO CONCRETE BARRIER (TYPE 60 OR 60C)

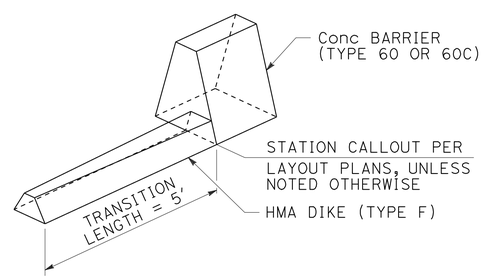

HMA DIKE (TYPE F) TO CONCRETE BARRIER (TYPE 60 OR 60C)

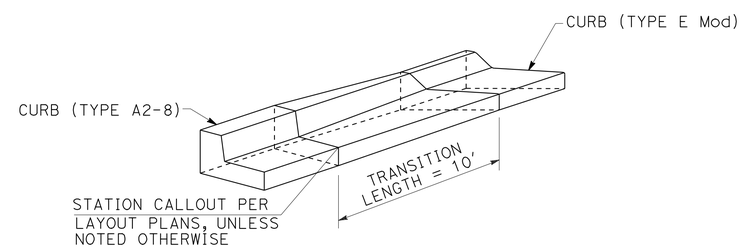

CURB (TYPE A2-8) TO CURB (TYPE E Mod)

CONSTRUCTION DETAILS
(MVP, CURB, AND HMA DIKE TRANSITIONS)

NO SCALE

C-32

Dist	COUNTY	ROUTE	POST MILES TOTAL PROJECT	SHEET No.	TOTAL SHEETS
12	Ora	91	0.9/5.4	87	885

REGISTERED CIVIL ENGINEER 3/7/12 DATE

8-13-12
PLANS APPROVAL DATE

REGISTERED PROFESSIONAL ENGINEER JOSUE J. VAGLIENTY No. 70783 Exp. 6-30-13 CIVIL STATE OF CALIFORNIA

THE STATE OF CALIFORNIA OR ITS OFFICERS OR AGENTS SHALL NOT BE RESPONSIBLE FOR THE ACCURACY OR COMPLETENESS OF SCANNED COPIES OF THIS PLAN SHEET.

RBF CONSULTING
14725 ALTON PKWY
IRVINE, CA 92618

OCTA
550 S. MAIN STREET
ORANGE, CA 92863

STATE OF CALIFORNIA - DEPARTMENT OF TRANSPORTATION
Caltrans
CONSULTANT FUNCTIONAL SUPERVISOR: MIKE CHESNEY
CALCULATED-DESIGNED BY: REBECCA KELCHER
CHECKED BY: JOSUE VAGLIENTY
REVISED BY
DATE REVISED

Dist	COUNTY	ROUTE	POST MILES TOTAL PROJECT	SHEET No.	TOTAL SHEETS
12	Ora	91	0.9/5.4	88	885

REGISTERED CIVIL ENGINEER 3/7/12 DATE

8-13-12
PLANS APPROVAL DATE

REGISTERED PROFESSIONAL ENGINEER JOSUE J. VAGLIENTY No. 70783 Exp. 6-30-13 CIVIL STATE OF CALIFORNIA

THE STATE OF CALIFORNIA OR ITS OFFICERS OR AGENTS SHALL NOT BE RESPONSIBLE FOR THE ACCURACY OR COMPLETENESS OF SCANNED COPIES OF THIS PLAN SHEET.

RBF CONSULTING
14725 ALTON PKWY
IRVINE, CA 92618

OCTA
550 S. MAIN STREET
ORANGE, CA 92863

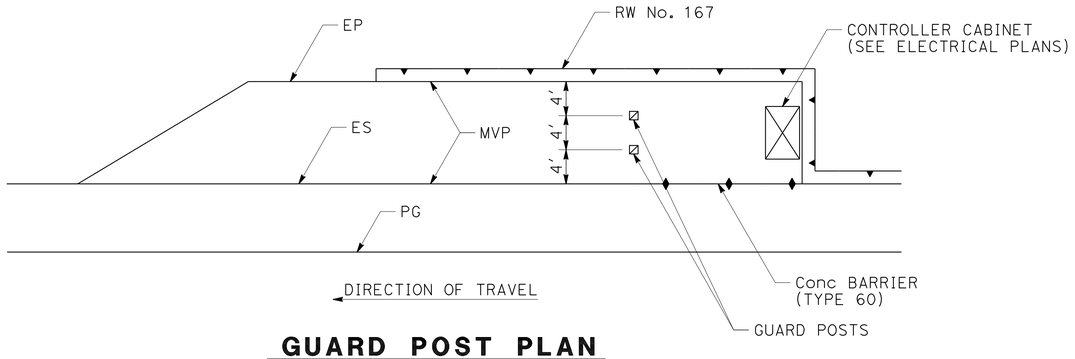

GUARD POST PLAN
Sta "A" 167+10.27

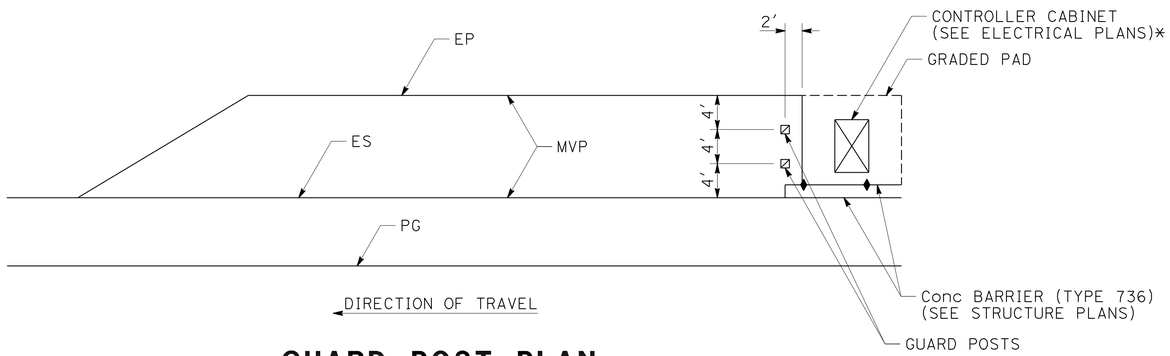

GUARD POST PLAN
Sta "A" 118+38
Sta "A" 277+93
*Sta "B" 330+78

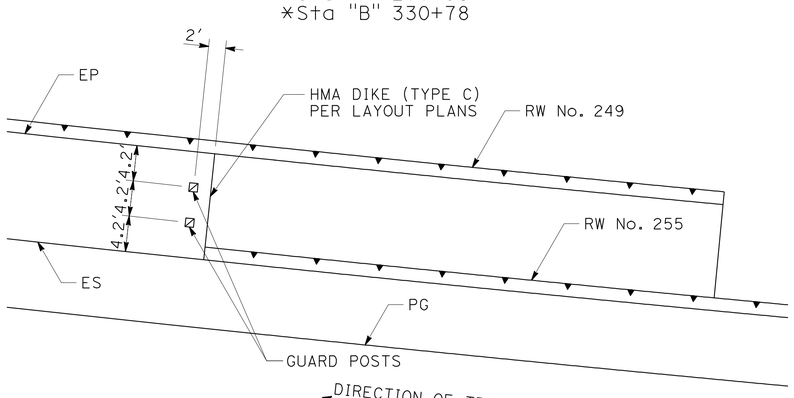

GUARD POST PLAN
Sta "A" 253+98

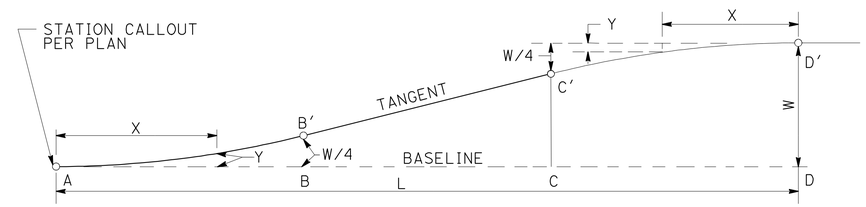

W = WIDTH OF LANE
L = LENGTH OF TAPER
X = DISTANCE FROM POINT "A" ALONG BASE LINE
Y = OFFSET FROM BASE LINE
AB = BC = CD = L/3
AB' AND C'D' ARE PARABOLIC CURVES

L=120' W=12'

L	0'	10'	20'	30'	40'	60'	80'	90'	100'	110'	120'
W	0'	0.19'	0.75'	1.69'	3.00'	6.00'	9.00'	10.31'	11.25'	11.81'	12.00'

BAY TAPER
RAMP "BH2" Sta 23+63.69, Rt
RAMP "EU2" Sta 77+05.26, Rt
RAMP "RA2" Sta 81+90, Lt
RAMP "SC2" Sta 35+30, Rt
RAMP "SC2" Sta 35+30, Lt

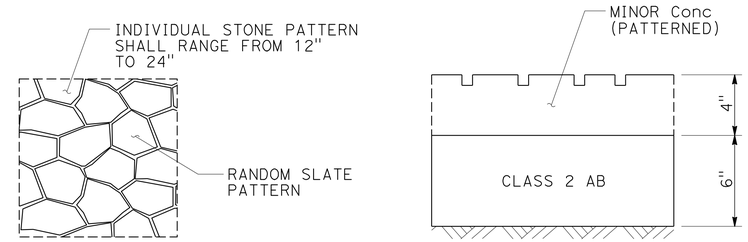

PLAN **SECTION**

MINOR CONCRETE (PATTERNED)

CONSTRUCTION DETAILS
(BAY TAPER, GUARD POST AND MINOR CONCRETE (PATTERNED))
NO SCALE

C-33

STATE OF CALIFORNIA - DEPARTMENT OF TRANSPORTATION
Caltrans
CONSULTANT FUNCTIONAL SUPERVISOR: MIKE CHESNEY
CALCULATED-DESIGNED BY: REBECCA KELCHER
CHECKED BY: JOSUE VAGLIENTY
REVISED BY
DATE REVISED

LAST REVISION DATE PLOTTED => 13-AUG-2012
06-08-10 TIME PLOTTED => 12:49

Dist	COUNTY	ROUTE	POST MILES TOTAL PROJECT	SHEET No.	TOTAL SHEETS
12	Ora	91	0.9/5.4	89	885

REGISTERED CIVIL ENGINEER 3/7/12 DATE

8-13-12
PLANS APPROVAL DATE

REGISTERED PROFESSIONAL ENGINEER JOSUE J. VAGLIENTY No. 70783 Exp. 6-30-13 CIVIL STATE OF CALIFORNIA

THE STATE OF CALIFORNIA OR ITS OFFICERS OR AGENTS SHALL NOT BE RESPONSIBLE FOR THE ACCURACY OR COMPLETENESS OF SCANNED COPIES OF THIS PLAN SHEET.

RBF CONSULTING
14725 ALTON PKWY
IRVINE, CA 92618

OCTA
550 S. MAIN STREET
ORANGE, CA 92863

NOTE:
1. FOR DETAILS AND NOTES NOT SHOWN, SEE STD PLAN No. A76A.

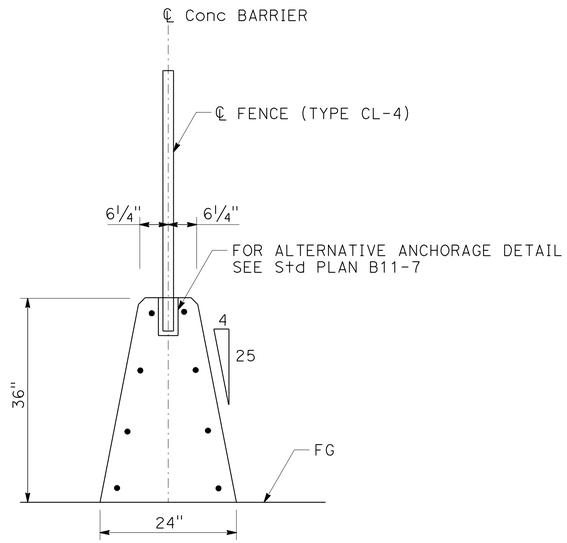

CONCRETE BARRIER (TYPE 60 Mod B)

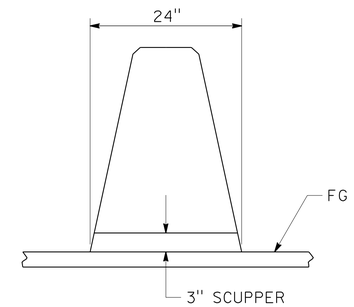

SECTION A-A

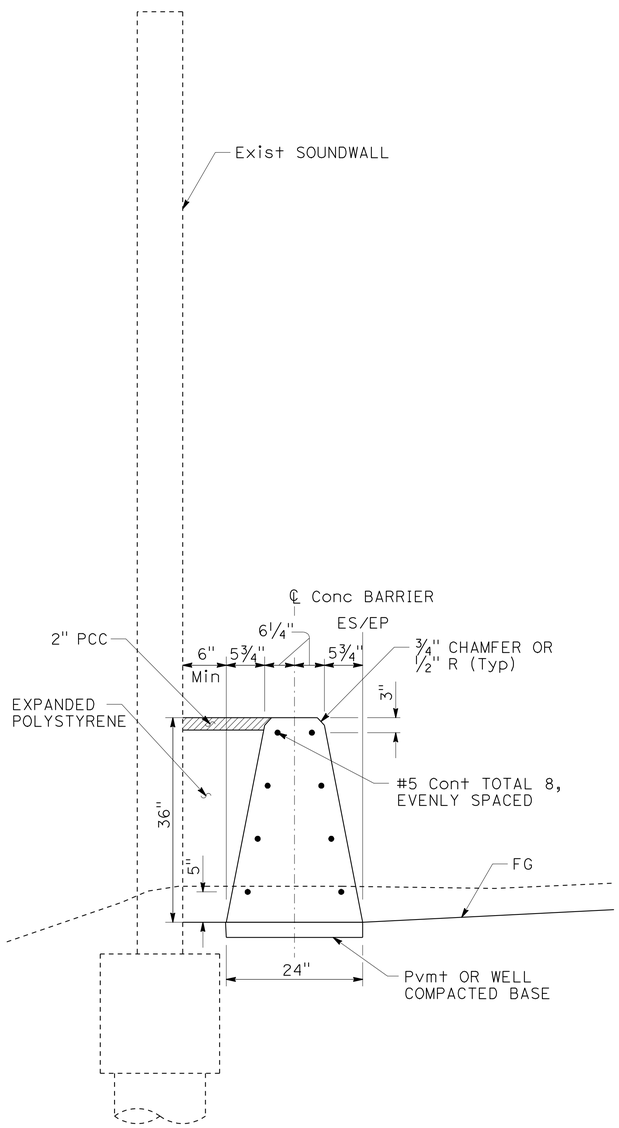

CONCRETE BARRIER (TYPE 60 Mod A)

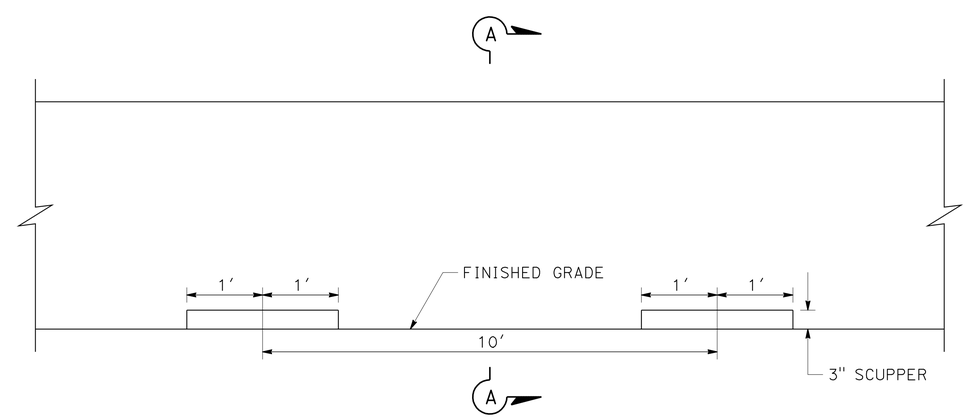

CONCRETE BARRIER (TYPE 60 Mod C)

CONSTRUCTION DETAILS
(CONCRETE BARRIER TYPE 60)
NO SCALE

C-34

STATE OF CALIFORNIA - DEPARTMENT OF TRANSPORTATION
Caltrans

CONSULTANT FUNCTIONAL SUPERVISOR: MIKE CHESNEY
CALCULATED-DESIGNED BY: STEVEN NGUYEN
CHECKED BY: JOSUE VAGLIENTY
REVISED BY
DATE REVISED

LAST REVISION 06-08-10
DATE PLOTTED => 13-AUG-2012
TIME PLOTTED => 12:49

NOTE:
1. SEE SIGN PLANS FOR SIGN PEDESTAL ELEVATIONS ON NEW CONSTRUCTION.

Dist	COUNTY	ROUTE	POST MILES TOTAL PROJECT	SHEET No.	TOTAL SHEETS
12	Ora	91	0.9/5.4	90	885

REGISTERED CIVIL ENGINEER 3/7/12 DATE

8-13-12
PLANS APPROVAL DATE

REGISTERED PROFESSIONAL ENGINEER JOSUE J. VAGLIENTY No. 70783 Exp. 6-30-13 CIVIL STATE OF CALIFORNIA

THE STATE OF CALIFORNIA OR ITS OFFICERS OR AGENTS SHALL NOT BE RESPONSIBLE FOR THE ACCURACY OR COMPLETENESS OF SCANNED COPIES OF THIS PLAN SHEET.

RBF CONSULTING
14725 ALTON PKWY
IRVINE, CA 92618

OCTA
550 S. MAIN STREET
ORANGE, CA 92863

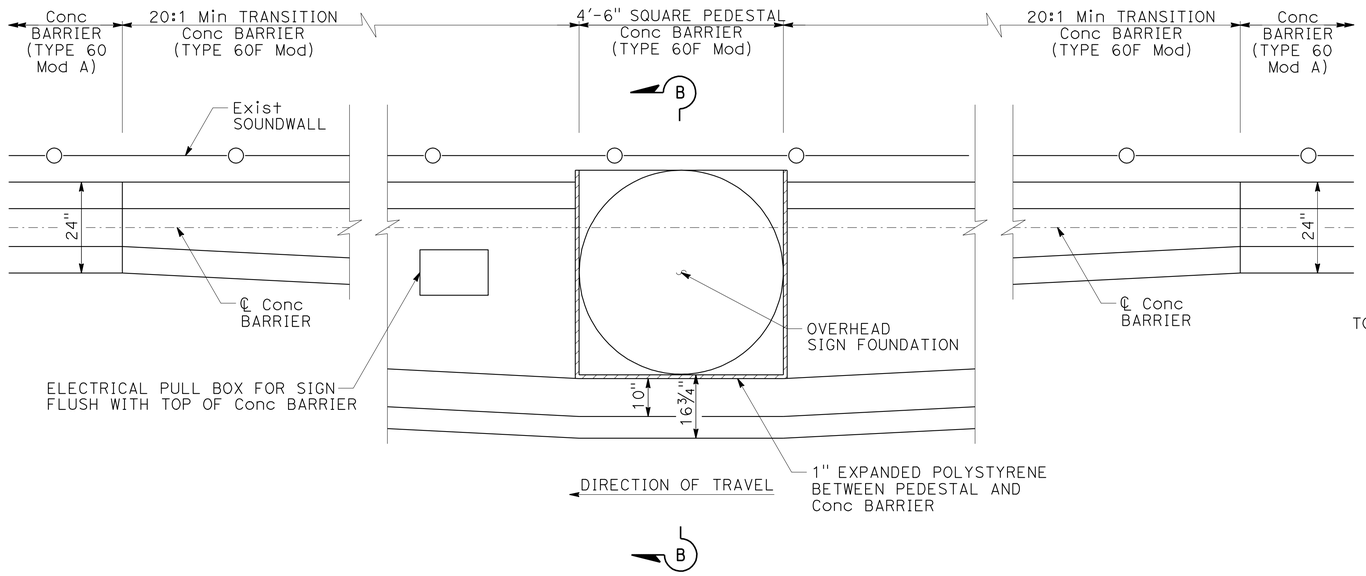

CONCRETE BARRIER TRANSITION
"A" Sta 150+60

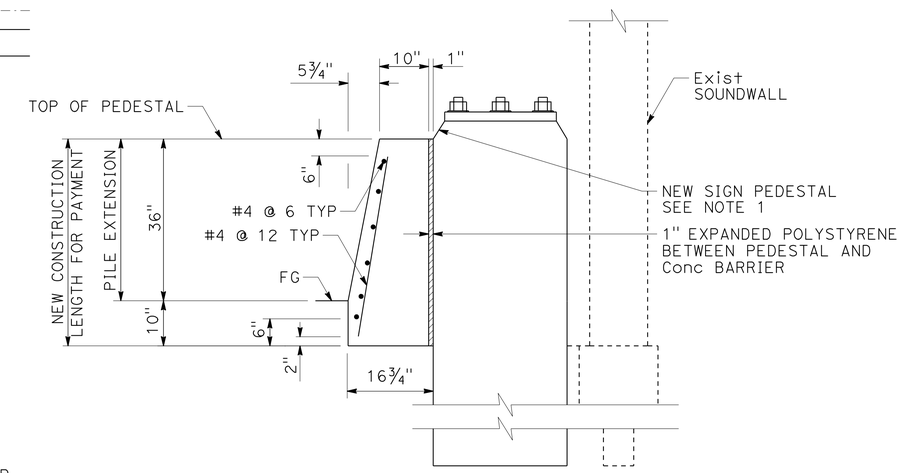

SECTION B-B

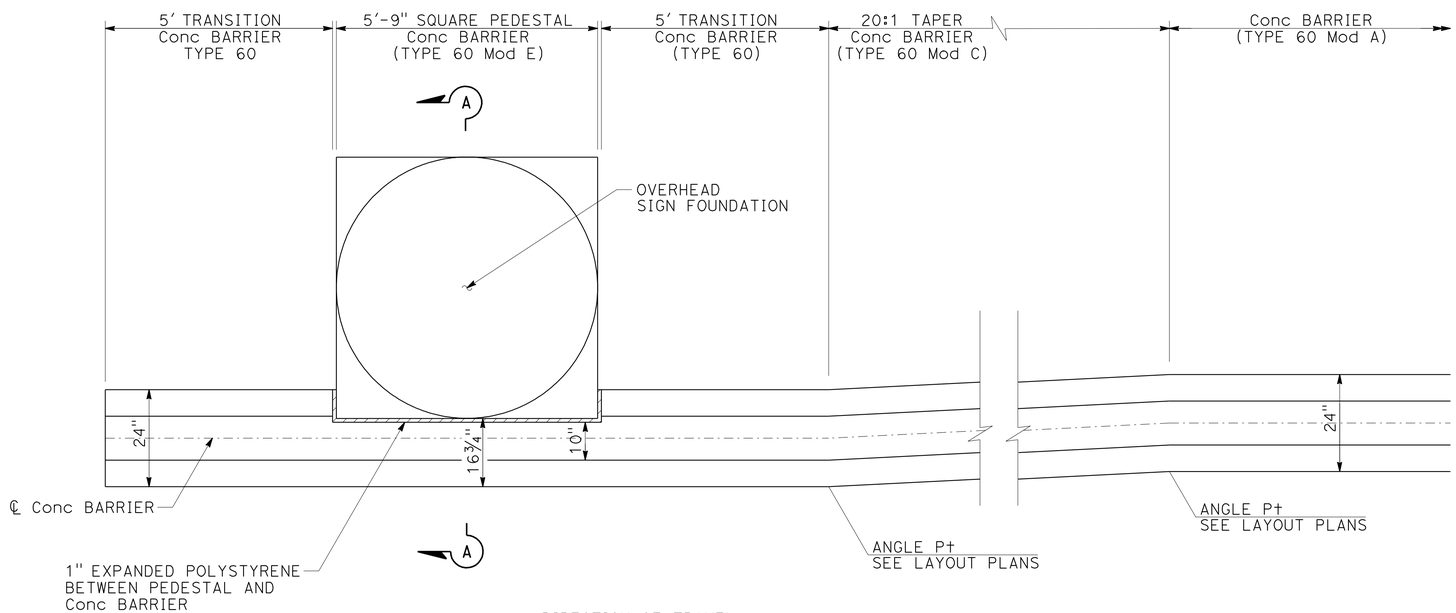

CONCRETE BARRIER TRANSITION
"A" Sta 131+97

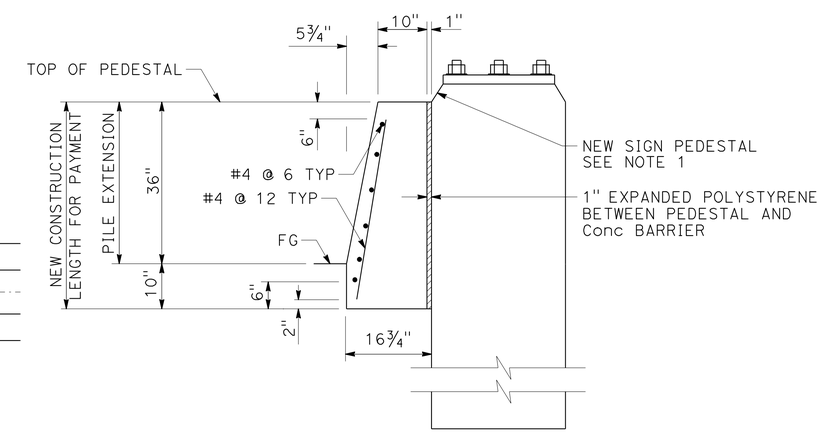

SECTION A-A

CONSTRUCTION DETAILS
(CONCRETE BARRIER TRANSITIONS)
NO SCALE

C-35

STATE OF CALIFORNIA - DEPARTMENT OF TRANSPORTATION
Caltrans
CONSULTANT FUNCTIONAL SUPERVISOR: MIKE CHESNEY
CALCULATED-DESIGNED BY: STEVEN NGUYEN
CHECKED BY: JOSUE VAGLIENTY
REVISED BY / DATE REVISED

LAST REVISION 06-08-10
DATE PLOTTED => 13-AUG-2012
TIME PLOTTED => 12:49

NOTES:

1. SEE SIGN PLANS FOR SIGN PEDESTAL ELEVATIONS ON NEW CONSTRUCTION.
2. DRILL AND TAP FOR 1/4" DIA HEX HEAD BOLT WITH FLAT WASHER, TOTAL 4.
3. CLOSURE ⅊, COVER ⅊, BOLTS AND OTHER HARDWARE TO BE GALVANIZED.
4. CONTRACTOR SHALL VERIFY ALL DEPENDENT DIMENSIONS IN THE FIELD BEFORE ORDERING AND/OR FABRICATING MATERIALS.

Dist	COUNTY	ROUTE	POST MILES TOTAL PROJECT	SHEET No.	TOTAL SHEETS
12	Ora	91	0.9/5.4	91	885

REGISTERED CIVIL ENGINEER 3/7/12 DATE

8-13-12
PLANS APPROVAL DATE

REGISTERED PROFESSIONAL ENGINEER JOSUE J. VAGLIENTY No. 70783 Exp. 6-30-13 CIVIL STATE OF CALIFORNIA

THE STATE OF CALIFORNIA OR ITS OFFICERS OR AGENTS SHALL NOT BE RESPONSIBLE FOR THE ACCURACY OR COMPLETENESS OF SCANNED COPIES OF THIS PLAN SHEET.

RBF CONSULTING
14725 ALTON PKWY
IRVINE, CA 92618

OCTA
550 S. MAIN STREET
ORANGE, CA 92863

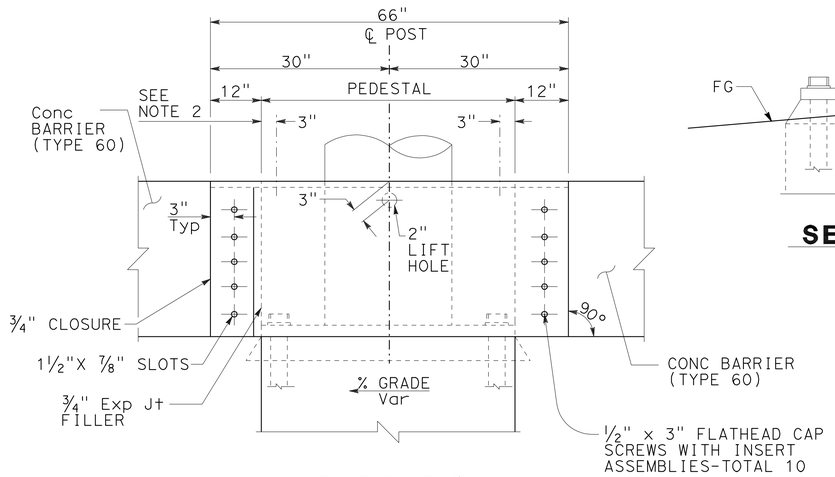

ELEVATION

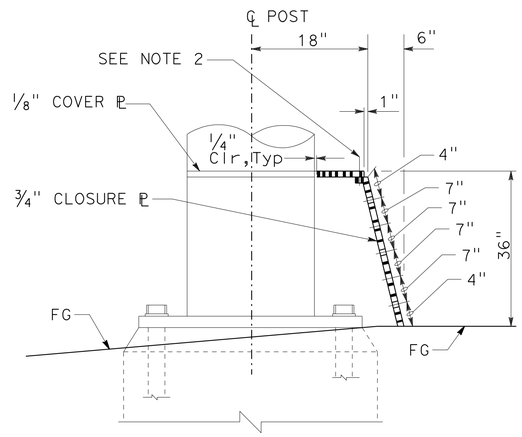

SECTION A-A

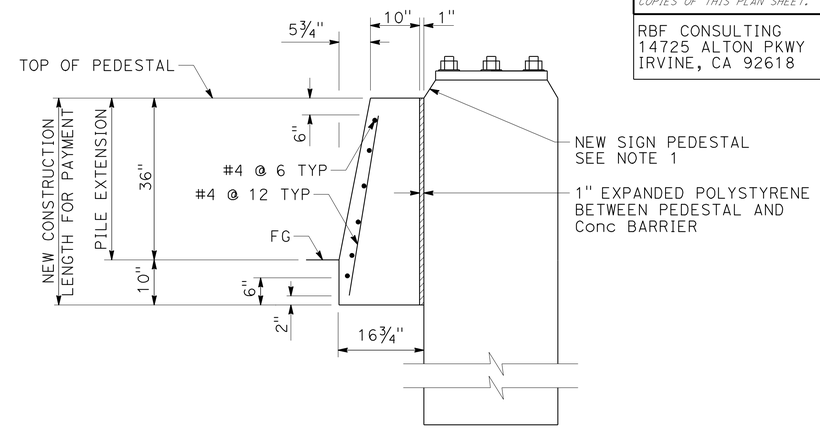

SECTION B-B

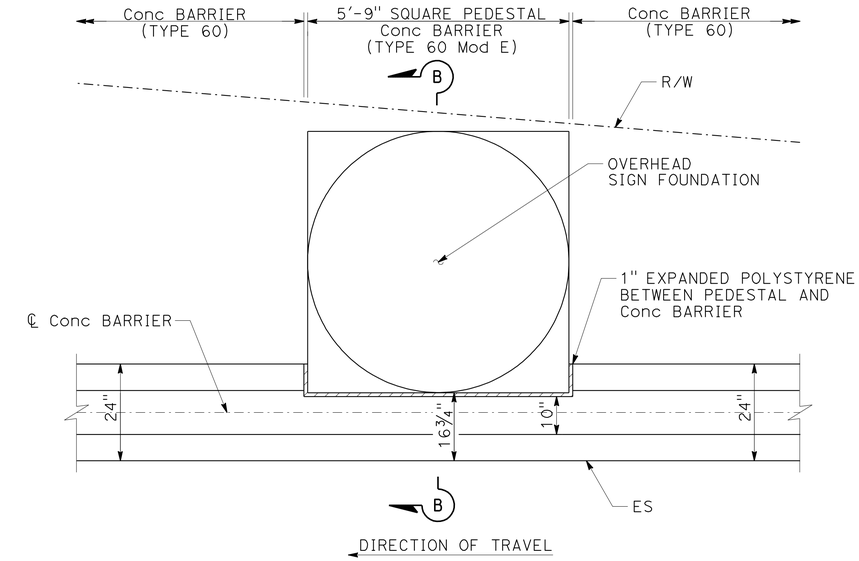

PLAN
CONCRETE BARRIER TRANSITION
"A" Sta 288+83

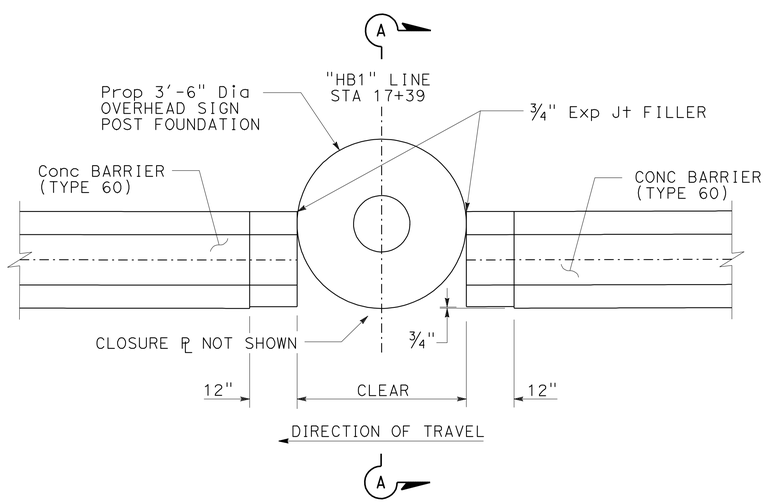

PLAN
CONCRETE BARRIER TRANSITION
"HB1" Sta 17+39

CONSTRUCTION DETAILS
(CONCRETE BARRIER TRANSITIONS)
NO SCALE

C-36

STATE OF CALIFORNIA - DEPARTMENT OF TRANSPORTATION

Caltrans

CONSULTANT FUNCTIONAL SUPERVISOR: MIKE CHESNEY

CALCULATED-DESIGNED BY: STEVEN NGUYEN

CHECKED BY: JOSUE VAGLIENTY

REVISED BY

DATE REVISED

LAST REVISION 06-08-10

DATE PLOTTED => 13-AUG-2012
TIME PLOTTED => 12:49

Dist	COUNTY	ROUTE	POST MILES TOTAL PROJECT	SHEET No.	TOTAL SHEETS
12	Ora	91	0.9/5.4	92	885

REGISTERED CIVIL ENGINEER 3/7/12 DATE

8-13-12
PLANS APPROVAL DATE

REGISTERED PROFESSIONAL ENGINEER JOSUE J. VAGLIENTY No. 70783 Exp. 6-30-13 CIVIL STATE OF CALIFORNIA

THE STATE OF CALIFORNIA OR ITS OFFICERS OR AGENTS SHALL NOT BE RESPONSIBLE FOR THE ACCURACY OR COMPLETENESS OF SCANNED COPIES OF THIS PLAN SHEET.

RBF CONSULTING
14725 ALTON PKWY
IRVINE, CA 92618

OCTA
550 S. MAIN STREET
ORANGE, CA 92863

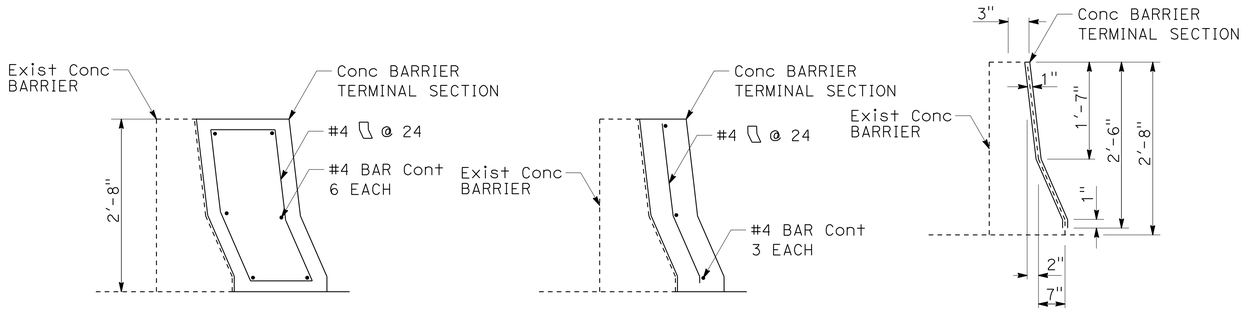

SECTION A-A SECTION B-B SECTION C-C

CONCRETE BARRIER TERMINAL SECTION
"SC2" Sta 38+30

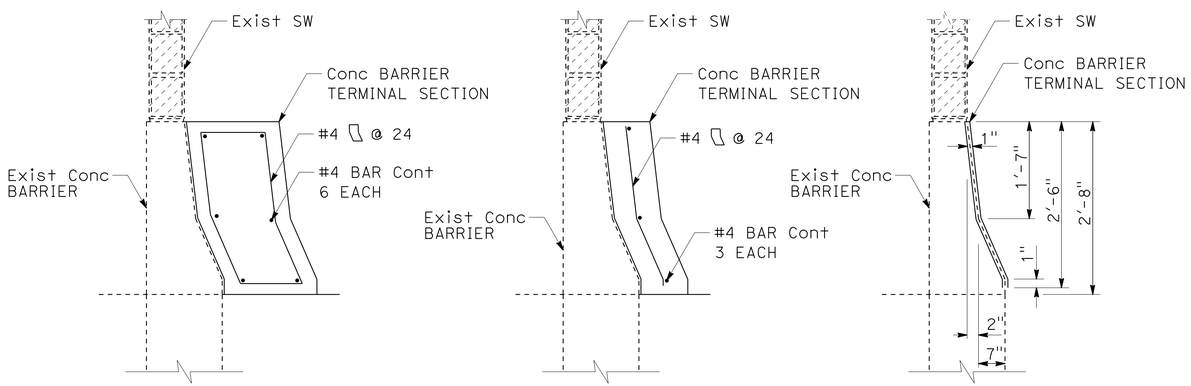

SECTION A-A SECTION B-B SECTION C-C

CONCRETE BARRIER TERMINAL SECTION
"A" Sta 184+06
"A" Sta 314+10
"A" Sta 316+78

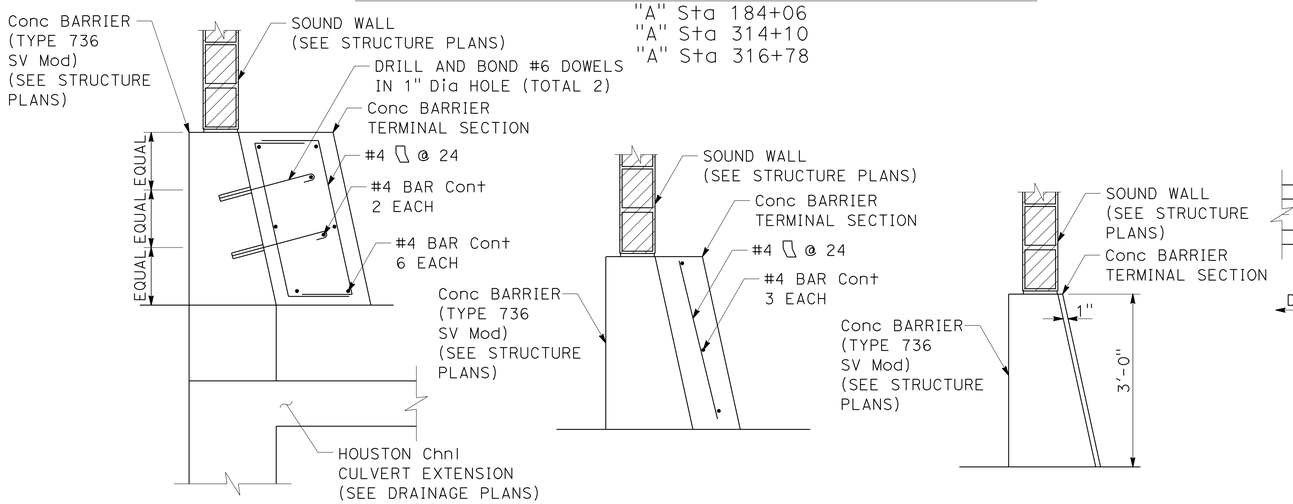

SECTION A-A SECTION B-B SECTION C-C

CONCRETE BARRIER TERMINAL SECTION
"EU1" Sta 58+64.10

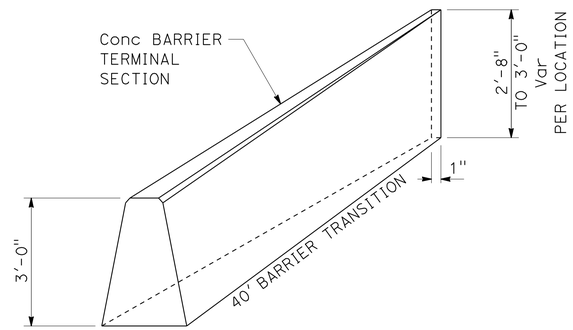

ISOMETRIC VIEW

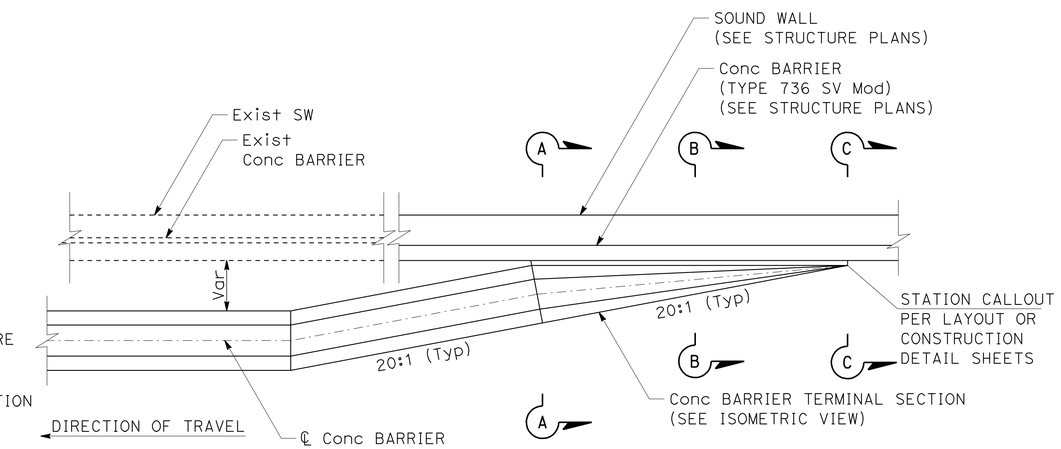

PLAN
CONCRETE BARRIER TERMINAL SECTION

CONSTRUCTION DETAILS
(CONCRETE BARRIER TERMINAL SECTIONS)
NO SCALE

C-37

STATE OF CALIFORNIA - DEPARTMENT OF TRANSPORTATION
Caltrans
CONSULTANT FUNCTIONAL SUPERVISOR: MIKE CHESNEY
CALCULATED-DESIGNED BY: STEVEN NGUYEN
CHECKED BY: JOSUE VAGLIENTY
REVISED BY
DATE REVISED

LAST REVISION 06-08-10
DATE PLOTTED => 13-AUG-2012
TIME PLOTTED => 12:49

Dist	COUNTY	ROUTE	POST MILES TOTAL PROJECT	SHEET No.	TOTAL SHEETS
12	Ora	91	0.9/5.4	93	885

REGISTERED CIVIL ENGINEER 3/7/12 DATE

8-13-12
PLANS APPROVAL DATE

REGISTERED PROFESSIONAL ENGINEER JOSUE J. VAGLIENTY No. 70783 Exp. 6-30-13 CIVIL STATE OF CALIFORNIA

THE STATE OF CALIFORNIA OR ITS OFFICERS OR AGENTS SHALL NOT BE RESPONSIBLE FOR THE ACCURACY OR COMPLETENESS OF SCANNED COPIES OF THIS PLAN SHEET.

RBF CONSULTING
14725 ALTON PKWY
IRVINE, CA 92618

OCTA
550 S. MAIN STREET
ORANGE, CA 92863

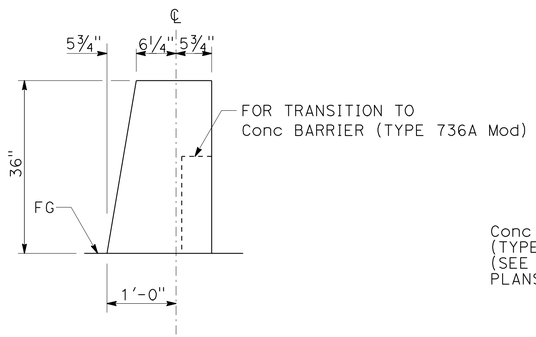

SECTION A-A

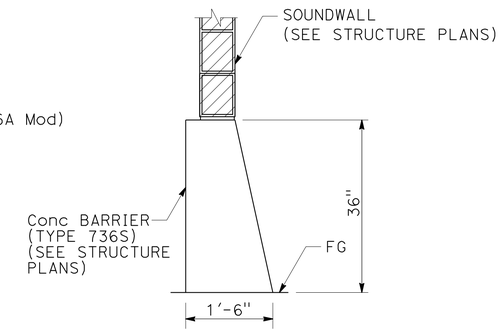

SECTION B-B

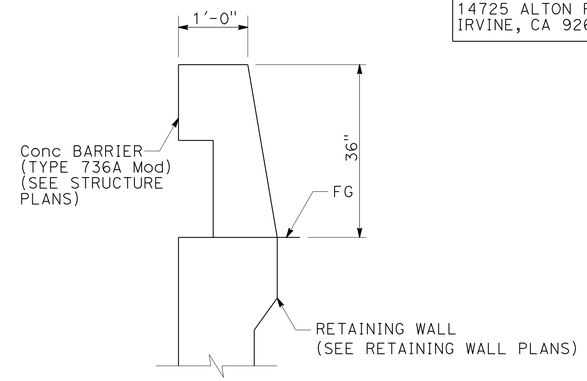

SECTION C-C

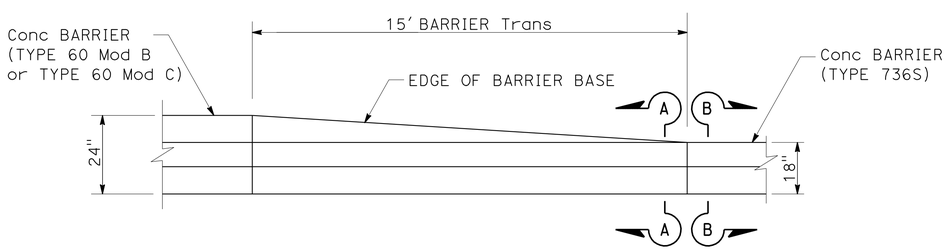

TRANSITION TYPE 60 Mod B / Mod C BARRIER TO TYPE 736S BARRIER

FOR TYPE 736S BARRIER,
SEE STRUCTURE PLANS

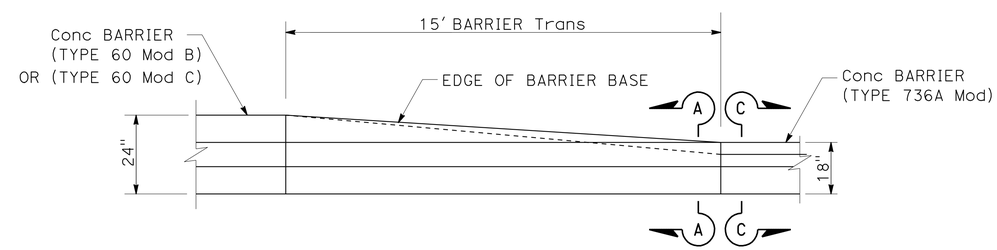

TRANSITION TYPE 60 Mod B/Mod C BARRIER TO TYPE 736A Mod BARRIER

FOR TYPE 736A Mod BARRIER,
SEE STRUCTURE PLANS

CONSTRUCTION DETAILS
(CONCRETE BARRIER TRANSITIONS)

NO SCALE

C-38

STATE OF CALIFORNIA - DEPARTMENT OF TRANSPORTATION
Caltrans

CONSULTANT FUNCTIONAL SUPERVISOR: MIKE CHESNEY
CALCULATED-DESIGNED BY: STEVEN NGUYEN
CHECKED BY: JOSUE VAGLIENTY
REVISED BY
DATE REVISED

LAST REVISION 06-08-10
DATE PLOTTED => 17-AUG-2012
TIME PLOTTED => 13:42

Dist	COUNTY	ROUTE	POST MILES TOTAL PROJECT	SHEET No.	TOTAL SHEETS
12	Ora	91	0.9/5.4	94	885

REGISTERED CIVIL ENGINEER 3/7/12 DATE

8-13-12
PLANS APPROVAL DATE

REGISTERED PROFESSIONAL ENGINEER JOSUE J. VAGLIENTY No. 70783 Exp. 6-30-13 CIVIL STATE OF CALIFORNIA

THE STATE OF CALIFORNIA OR ITS OFFICERS OR AGENTS SHALL NOT BE RESPONSIBLE FOR THE ACCURACY OR COMPLETENESS OF SCANNED COPIES OF THIS PLAN SHEET.

RBF CONSULTING
14725 ALTON PKWY
IRVINE, CA 92618

OCTA
550 S. MAIN STREET
ORANGE, CA 92863

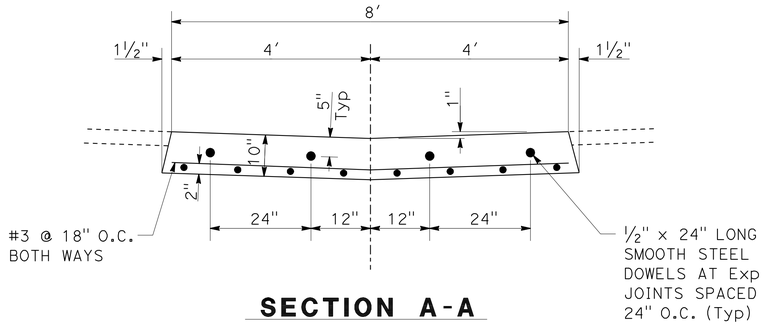

SECTION A-A

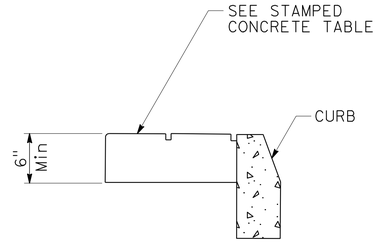

SECTION B-B

STAMPED CONCRETE TABLE		
PATTERN	AREA	INTEGRAL COLOR
BASKETWEAVE	NON-RESORT	CRESENDA BROWN
SLATE	RESORT	NONE

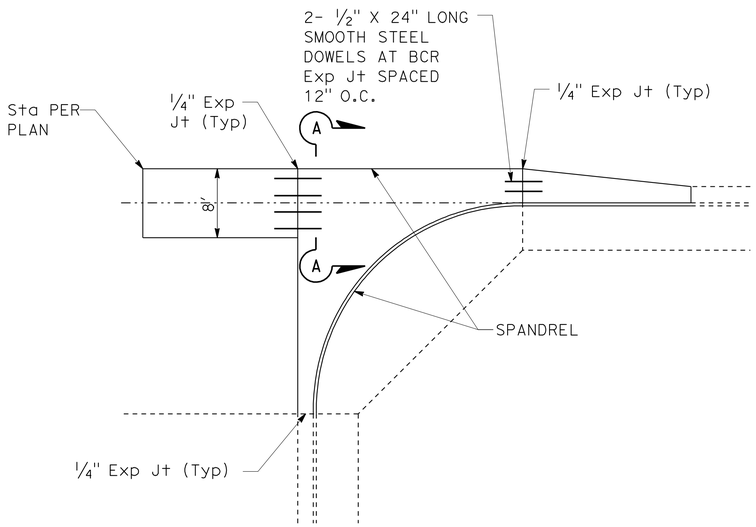

PLAN
MINOR CONCRETE (GUTTER)

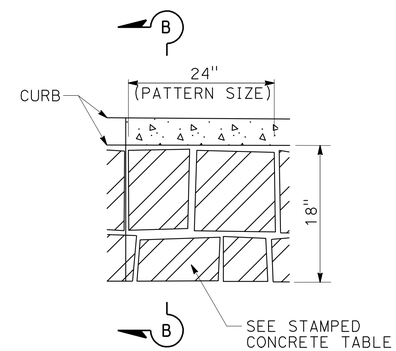

PLAN
MINOR CONCRETE (STAMPED CONCRETE)

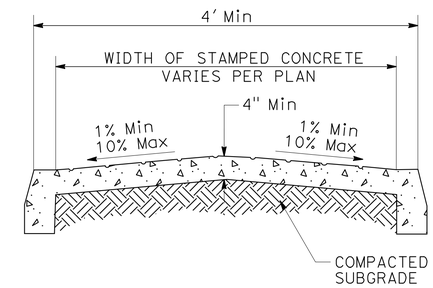

NOSE CROSS SECTION

ABBREVIATIONS:

O.C. ON CENTER

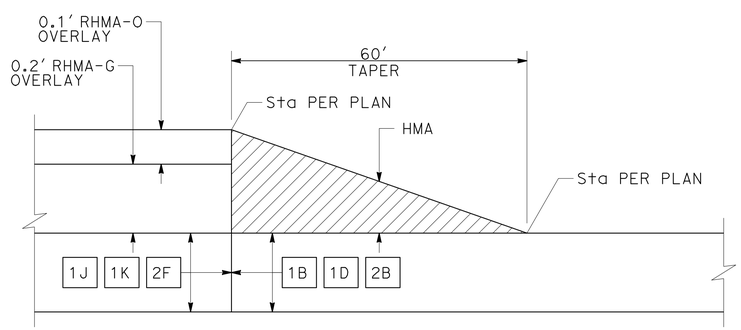

PAVEMENT TRANSITION DETAIL
"A" Sta 276+40 TO "A" Sta 277+00

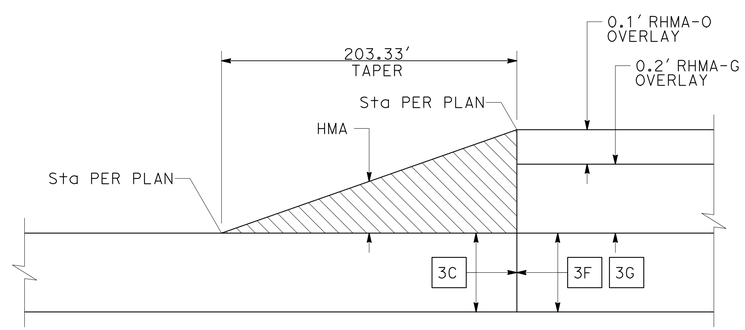

PAVEMENT TRANSITION DETAIL
"LM1" Sta 44+00 TO "LM1" Sta 46+03.33

CONSTRUCTION DETAILS
(MINOR CONCRETE (GUTTER), STAMPED CONCRETE AND PAVEMENT TRANSITION)
NO SCALE

C-39

STATE OF CALIFORNIA - DEPARTMENT OF TRANSPORTATION
Caltrans
CONSULTANT FUNCTIONAL SUPERVISOR: MIKE CHESNEY
CALCULATED-DESIGNED BY: STEVEN NGUYEN
CHECKED BY: JOSUE VAGLIENTY
REVISED BY
DATE REVISED

LAST REVISION 06-08-10
DATE PLOTTED => 13-AUG-2012
TIME PLOTTED => 12:50

Dist	COUNTY	ROUTE	POST MILES TOTAL PROJECT	SHEET No.	TOTAL SHEETS
12	Ora	91	0.9/5.4	95	885

REGISTERED CIVIL ENGINEER 8/8/12 DATE

8-13-12
PLANS APPROVAL DATE

REGISTERED PROFESSIONAL ENGINEER JOSUE J. VAGLIENTY No. 70783 Exp. 6-30-13 CIVIL STATE OF CALIFORNIA

THE STATE OF CALIFORNIA OR ITS OFFICERS OR AGENTS SHALL NOT BE RESPONSIBLE FOR THE ACCURACY OR COMPLETENESS OF SCANNED COPIES OF THIS PLAN SHEET.

RBF CONSULTING
14725 ALTON PKWY
IRVINE, CA 92618

OCTA
550 S. MAIN STREET
ORANGE, CA 92863

TABLE A

POST OFFSET DIMENSIONS		
Post No.	3'-0" System End Offset	3'-6" System End Offset
1	36"	42"
2	22¼"	27¾"
3	11¾"	16¼"
4	6¾"	10⅝"
5	3"	6"
6	¾"	2¾"
7	0"	¾"
8	0"	0"

See Note 12

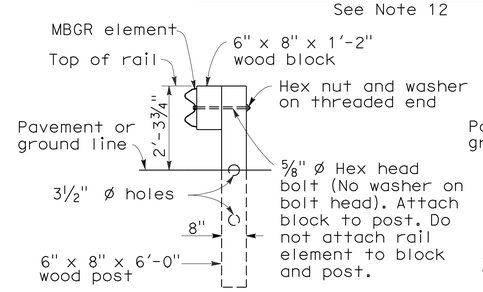

SECTION A-A

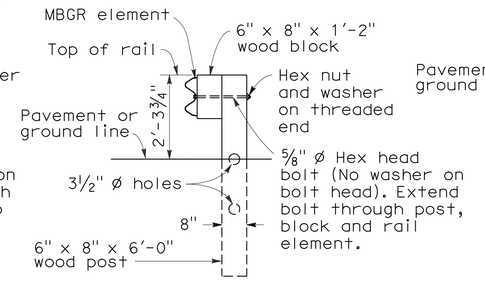

SECTION B-B

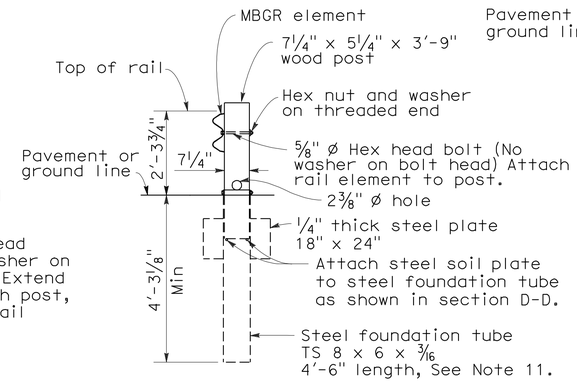

SECTION C-C

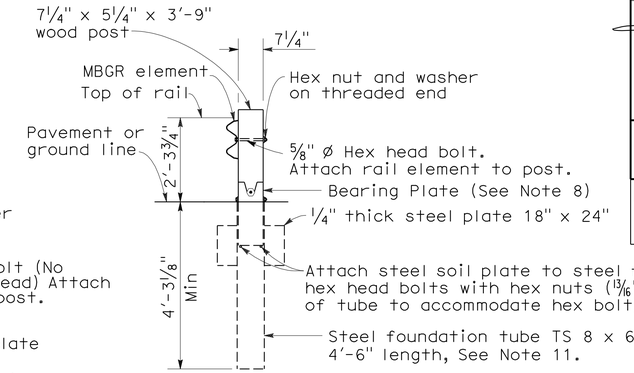

SECTION D-D

(Terminal Section not shown)

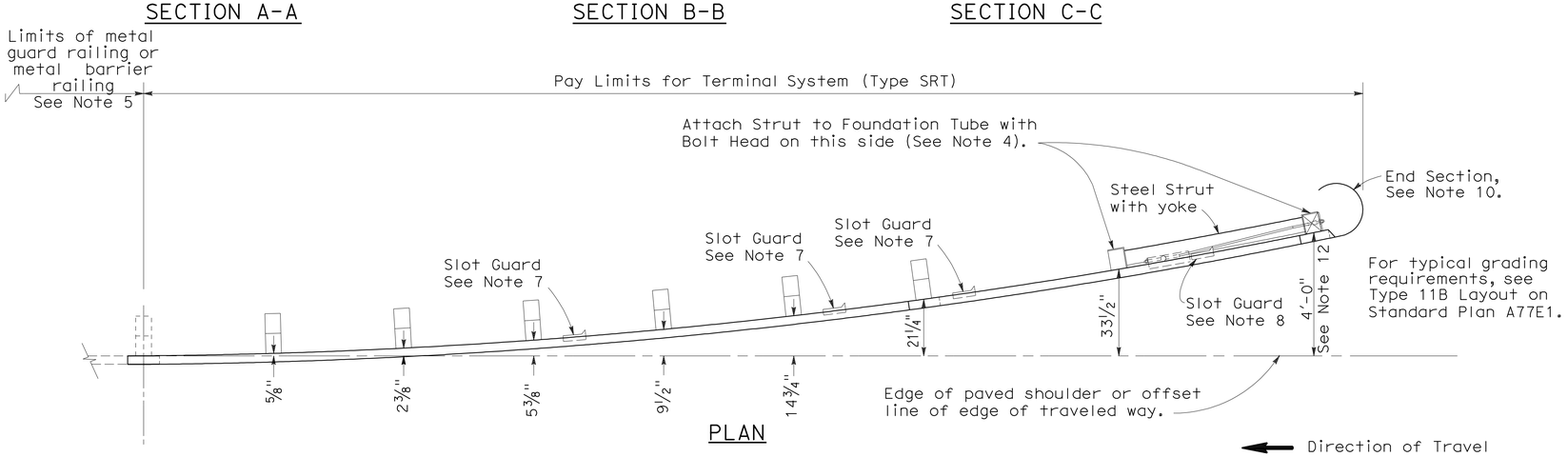

PLAN

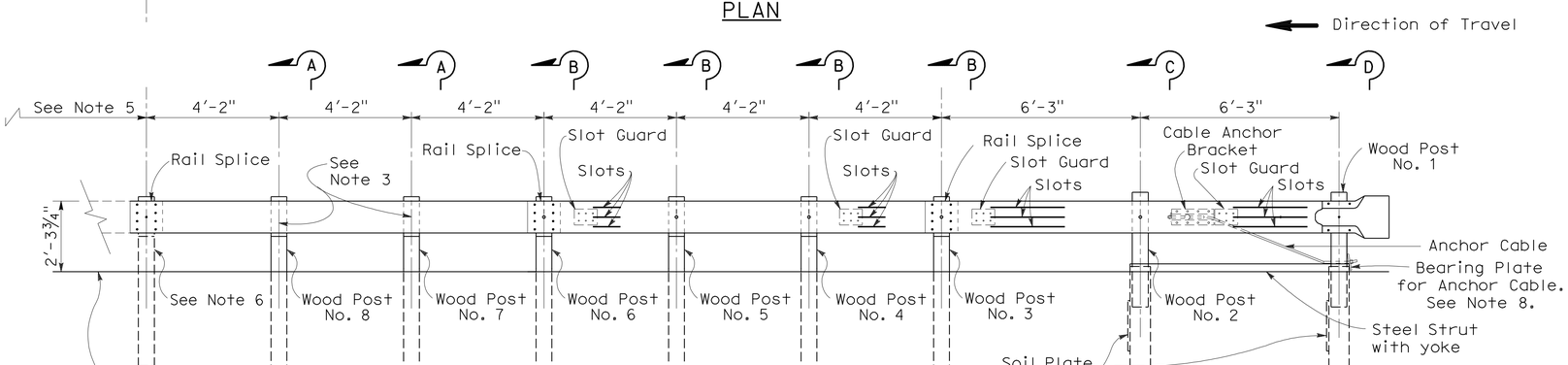

ELEVATION

TERMINAL SYSTEM (TYPE SRT)

(8 Post System)
See Note 9

NOTES:

1. For additional details of Terminal System (Type SRT), refer to the manufacturer's installation instructions.
2. The post offset dimensions are given to the center of the traffic face of the block, except at the first two posts, where the dimension is to the center of the traffic face of the post. Offset points are to be located by chord measurements at the back of the rail equal to the nominal post spacings shown. Posts are to be set approximately radial to the railing at each post locations.
3. Do not attach rail elements to posts 7 and 8.
4. Attach strut to Post Nos. 1 and 2 foundation tubes with ⅝" ø hex head bolts, washers and hex nuts. Bolts extend through the strut, steel foundation tube, and wood posts.
5. For the length and type of metal beam guard railing or metal barrier railing the terminal system is attached to, see the Project Plans.
6. Attach rail element to this post and block. Payment for this post, block and hardware is included in payment for the type of railing or barrier the terminal system is attached to, not part of payment for Terminal System (Type SRT).
7. The deflector angle of the slot guard is to be positioned immediately downstream of the slots.
8. For bearing plate orientation, refer to the manufacturer's installation instructions.
9. For typical use of this terminal system with guard railing, see the A77E, A77F and A77G Series of Standard Plans.
10. A complete wrap around end section may continued to be used in existing installations. New installations shall be constructed with the ¾ wrap end section shown.
11. A 6'-0" length steel foundation tube, TS 8 x 6 x 3/16 without a soil plate, may be furnished and installed in place of the 4'-6" length steel foundation tube and soil plate shown. Minimum embedment of the 6'-0" length tube shall be 5'-9". A ⅝" ø hex head bolt and nut shall be installed in the hole in 6'-0" length tube to keep the wood post from dropping into the tube.
12. Where site conditions will not accommodate use of the standard 4'-0" system end offset, 3'-6" or 3'-0" system end offsets, as applicable, may be used. See Table A for post offset dimensions for 3'-6" and 3'-0" system end offsets.

CONSTRUCTION DETAILS
(ALTERNATIVE FLARED TERMINAL SYSTEM)

NO SCALE

C-40

STATE OF CALIFORNIA - DEPARTMENT OF TRANSPORTATION
Caltrans

CONSULTANT FUNCTIONAL SUPERVISOR: MIKE CHESNEY
CALCULATED-DESIGNED BY: STEVEN NGUYEN
CHECKED BY: JOSUE VAGLIENTY
REVISED BY
DATE REVISED

LAST REVISION 06-08-10
DATE PLOTTED => 13-AUG-2012
TIME PLOTTED => 12:50

Dist	COUNTY	ROUTE	POST MILES TOTAL PROJECT	SHEET No.	TOTAL SHEETS
12	Ora	91	0.9/5.4	96	885

REGISTERED CIVIL ENGINEER 8/8/12 DATE

8-13-12
PLANS APPROVAL DATE

REGISTERED PROFESSIONAL ENGINEER JOSUE J. VAGLIENTY No. 70783 Exp. 6-30-13 CIVIL STATE OF CALIFORNIA

THE STATE OF CALIFORNIA OR ITS OFFICERS OR AGENTS SHALL NOT BE RESPONSIBLE FOR THE ACCURACY OR COMPLETENESS OF SCANNED COPIES OF THIS PLAN SHEET.

RBF CONSULTING
14725 ALTON PKWY
IRVINE, CA 92618

OCTA
550 S. MAIN STREET
ORANGE, CA 92863

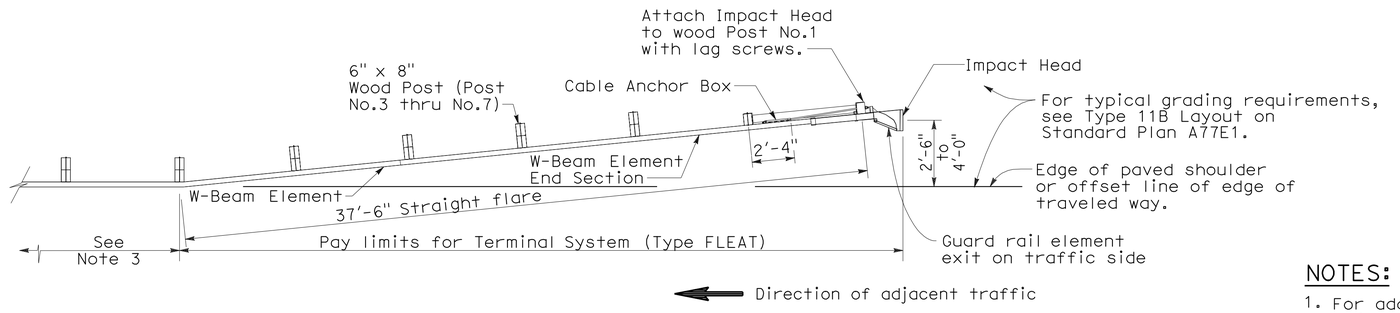

PLAN

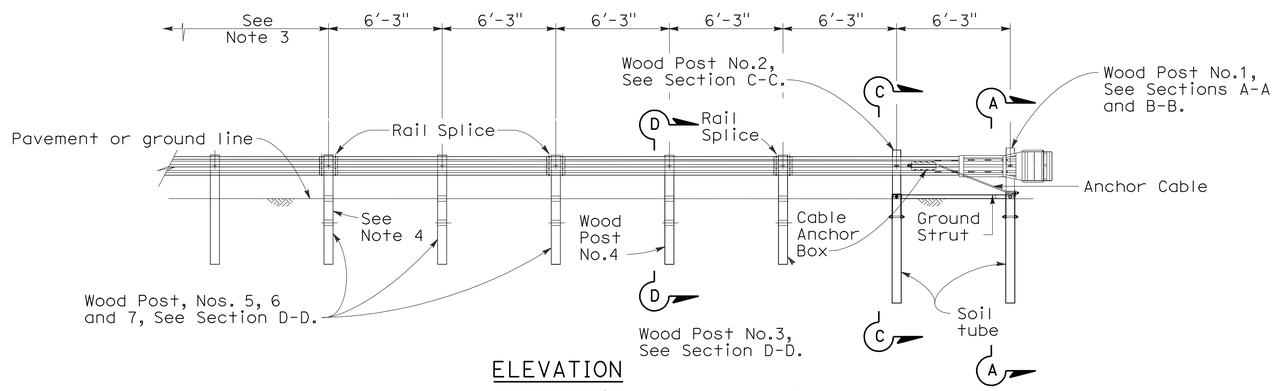

ELEVATION

TERMINAL SYSTEM (TYPE FLEAT)

NOTES:

1. For additional details of Terminal System (Type FLEAT), refer to the manufacturer's installation instructions.
2. Terminal System (Type FLEAT) not to be used where extrusion of the rail on the front side of the installation would be in the path of pedestrian traffic.
3. For the length and type of metal beam guard railing or metal barrier railing the terminal system is attached to, see Project Plans. For typical use of this terminal system with guard railing, see the A77E, A77F and A77G Series of the Standard Plans.
4. Attach rail element to this post and block. Payment for this post, block and attaching hardware is included in payment for Terminal System (Type FLEAT).

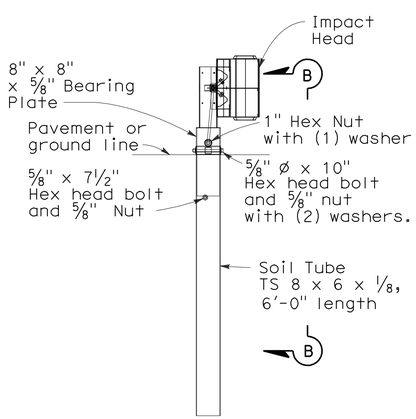

SECTION A-A

Post No.1

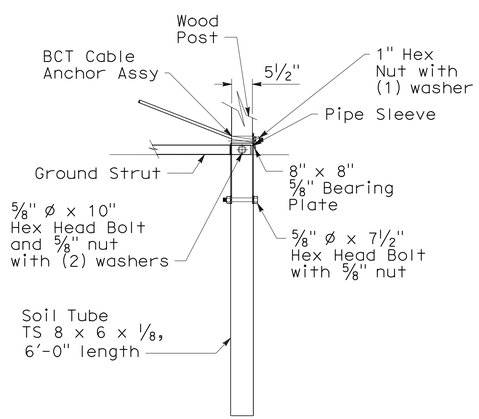

SECTION B-B

Partial view Post No.1

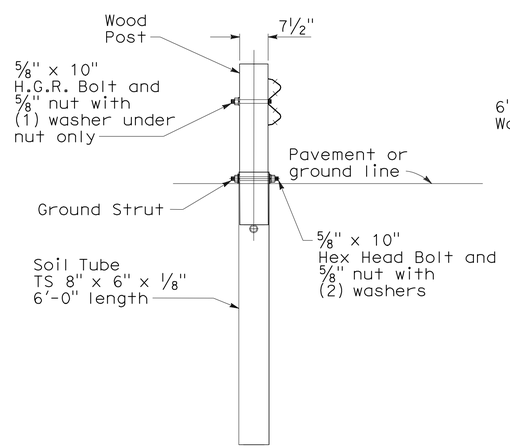

SECTION C-C

at Post No.2

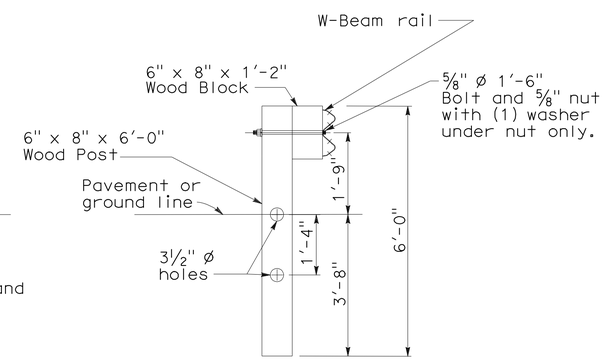

SECTION D-D

Post No.3 through No.7.

CONSTRUCTION DETAILS
(ALTERNATIVE FLARED TERMINAL SYSTEM)

NO SCALE

C-41

STATE OF CALIFORNIA - DEPARTMENT OF TRANSPORTATION
Caltrans

CONSULTANT FUNCTIONAL SUPERVISOR: MIKE CHESNEY
CALCULATED-DESIGNED BY: STEVEN NGUYEN
CHECKED BY: JOSUE VAGLIENTY
REVISED BY
DATE REVISED

LAST REVISION 06-08-10
DATE PLOTTED => 13-AUG-2012
TIME PLOTTED => 12:50

Dist	COUNTY	ROUTE	POST MILES TOTAL PROJECT	SHEET No.	TOTAL SHEETS
12	Ora	91	0.9/5.4	97	885

REGISTERED CIVIL ENGINEER 8/8/12 DATE

8-13-12
PLANS APPROVAL DATE

REGISTERED PROFESSIONAL ENGINEER JOSUE J. VAGLIENTY No. 70783 Exp. 6-30-13 CIVIL STATE OF CALIFORNIA

THE STATE OF CALIFORNIA OR ITS OFFICERS OR AGENTS SHALL NOT BE RESPONSIBLE FOR THE ACCURACY OR COMPLETENESS OF SCANNED COPIES OF THIS PLAN SHEET.

RBF CONSULTING
14725 ALTON PKWY
IRVINE, CA 92618

OCTA
550 S. MAIN STREET
ORANGE, CA 92863

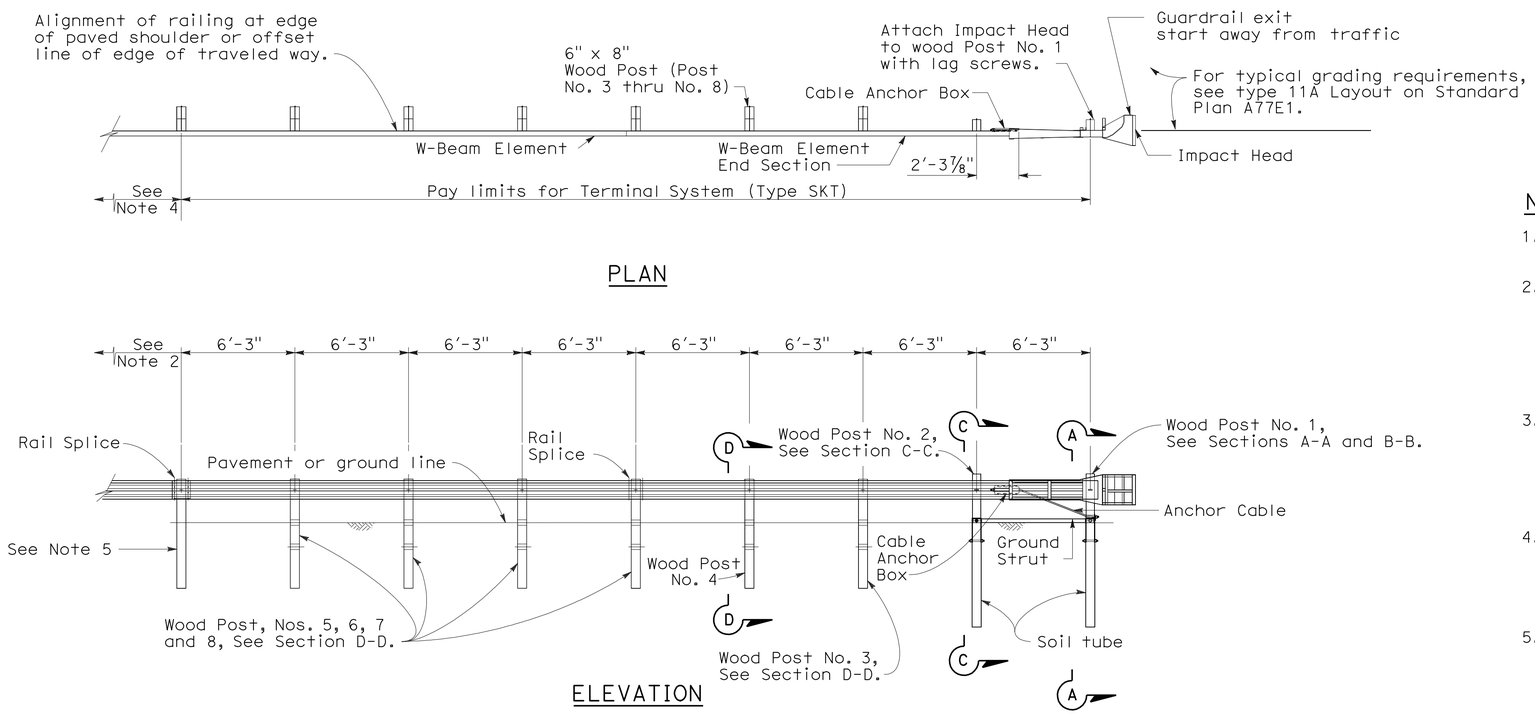

NOTES:

1. For additional details of Terminal System (Type SKT), refer to the manufacturer's installation instructions.
2. Terminal System (Type SKT) must be constructed so that the full length of the terminal system guard railing is in straight alignment. Terminal System (Type SKT) can be flared at a maximum rate of 25:1 to prevent the impact head from encroaching on the shoulder. The flare is not required and may be decreased or eliminated for specific installations.
3. Terminal System (Type SKT) not to be used where extrusion of the rail on the back side of the installation would be in the path of pedestrian traffic or where there is less than 25'-0" between the outlet side of the Impacted Head and any adjacent vehicle traffic.
4. For the length and type of metal beam guard railing or metal barrier railing the terminal system is attached to, see Project Plans. For typical use of this terminal system with guard railing, see the A77E, A77F and A77G Series of the Standard Plans.
5. Attach rail element to this post and block. Payment for this post, block and hardware is included in payment for the type of railing or barrier the terminal system is attached to, not part of payment for Terminal System (Type SKT).

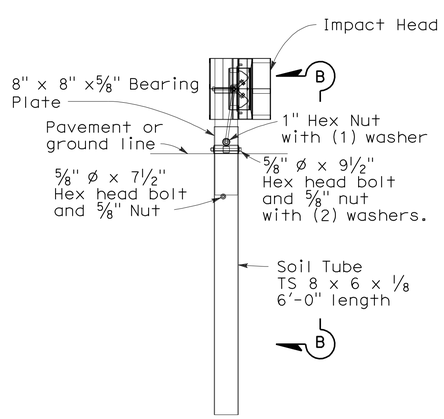

SECTION A-A
Post No. 1

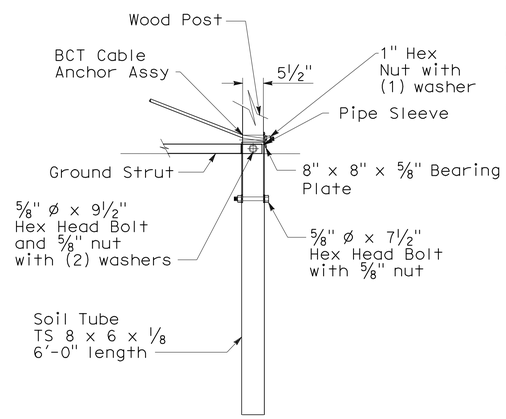

SECTION B-B
Partial view Post No. 1

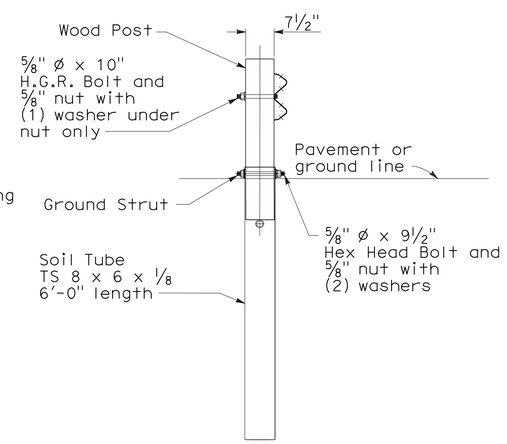

SECTION C-C
at Post No. 2

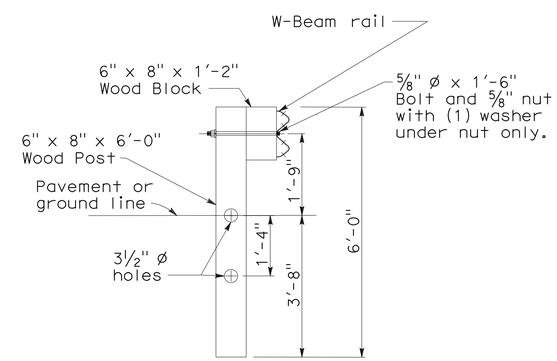

SECTION D-D
Post No. 3 through No. 8

CONSTRUCTION DETAILS
(ALTERNATIVE IN-LINE TERMINAL SYSTEM)
NO SCALE

C-42

STATE OF CALIFORNIA - DEPARTMENT OF TRANSPORTATION
Caltrans
CONSULTANT FUNCTIONAL SUPERVISOR: MIKE CHESNEY
CALCULATED-DESIGNED BY: STEVEN NGUYEN
CHECKED BY: JOSUE VAGLIENTY
REVISED BY
DATE REVISED

LAST REVISION 06-08-10
DATE PLOTTED => 13-AUG-2012
TIME PLOTTED => 12:50

Dist	COUNTY	ROUTE	POST MILES TOTAL PROJECT	SHEET No.	TOTAL SHEETS
12	Ora	91	0.9/5.4	98	885

REGISTERED CIVIL ENGINEER 8/8/12 DATE

8-13-12
PLANS APPROVAL DATE

REGISTERED PROFESSIONAL ENGINEER JOSUE J. VAGLIENTY No. 70783 Exp. 6-30-13 CIVIL STATE OF CALIFORNIA

THE STATE OF CALIFORNIA OR ITS OFFICERS OR AGENTS SHALL NOT BE RESPONSIBLE FOR THE ACCURACY OR COMPLETENESS OF SCANNED COPIES OF THIS PLAN SHEET.

RBF CONSULTING
14725 ALTON PKWY
IRVINE, CA 92618

OCTA
550 S. MAIN STREET
ORANGE, CA 92863

NOTES:

1. For additional details of Terminal System (Type ET), refer to the manufacturer's installation instructions.
2. Terminal System (Type ET) must be constructed so that the full length of the terminal system guard railing is in straight alignment. The Guard Rail Extruder head of the terminal system shall not encroach upon the adjacent paved shoulder or lane. A traffic approach flare of 50:1 or 25:1 for the full length of Terminal System (Type ET) installation may be used where the Guard Rail Extruder head would encroach upon the adjacent paved shoulder or lane.
3. Slide Guard Rail Extruder over the end of the rail element and attach to Post No.1 with lag screws. Do not bolt rail element to post. Guard Rail Extruder attachment brackets have 3 holes in each bracket to provide tolerance adjustment. Use the holes in the bracket closest to center of Post No.1. Drill 1/4" pilot holes to accommodate lag screws.
4. Attach strut to Post Nos. 1 and 2 foundation tubes with hex head bolts, washers and hex nuts. Bolts extend through the strut, steel foundation tube, and wood posts. Channel side of strut to face downward.
5. For length and type of metal beam guard railing or metal barrier railing the terminal system is attached to, see Project Plans. For typical use of this terminal system, see the A77E, A77F and A77G Series of the Standard Plans.
6. Attach rail element to this post and block. Payment for this post, block and hardware included in payment for the type of railing or barrier the terminal system is attached to, not part of the payment for Terminal System (Type ET).
7. Yellow retroreflective sheeting, as provided by Terminal System (Type ET) manufacturer, shall be adhered to the face of extruder head. The sheeting shall be consistent with the design pattern and colors of a Type P object marker panel.
8. Attach rail to Post No.2 (no wood block) in same manner shown in section A-A. Do not bolt rail to Post No.1, See Note 3.
9. Terminal System (Type ET) not to be used where extrusion of the rail on the back side of the installation would be in the path of pedestrian or vehicular traffic.
10. A continuous rail element section between Post Nos.1 and 5 (no intermediate rail splices) may continue to be used in existing installations. New installations shall be constructed as shown with two rail element sections between Post Nos.1 and 5.
11. A 6'-0" length steel foundation tube, TS 8 x 6 x 3/16", without soil plate, may be used in place of the 4'-6" length steel foundation tube and soil plate shown. Minimum embedment of the 6'-0" length tube shall be 5'-9". A 5/8" ø hex head bolt and nuts shall be installed in the hole in the 6'-0" length tube to keep the wood post from dropping into the tube.

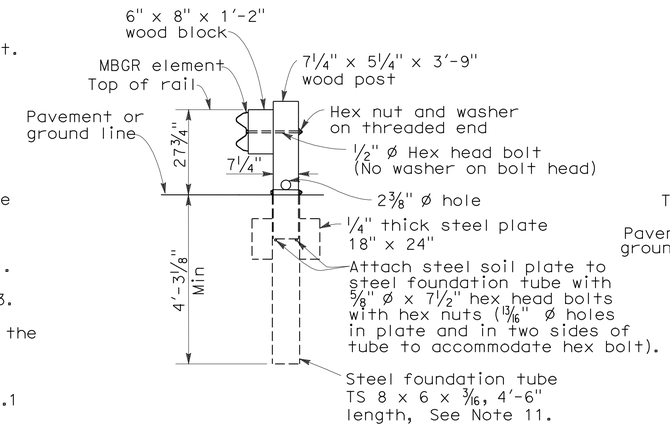

SECTION A-A

Soil plate and wood post attachment to steel foundation tube similar for Post Nos. 1, 2 and 4. Wood blocks not used with Post Nos.1 and 2. See Note 8.

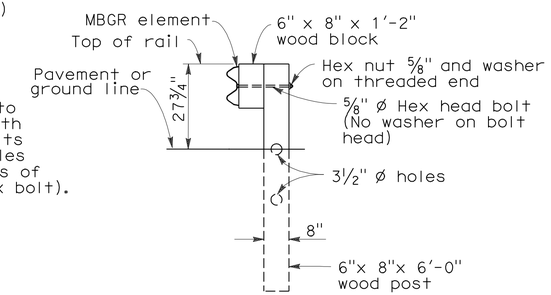

SECTION B-B

Post Nos. 5, 7 and 8 similar except rail elements are not attached to Post Nos. 5 and 7

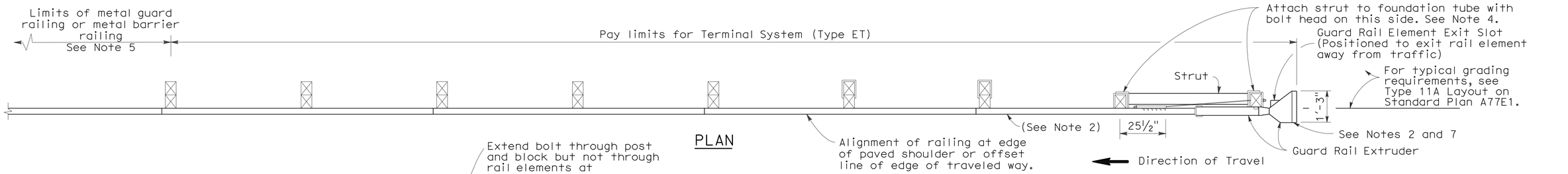

PLAN

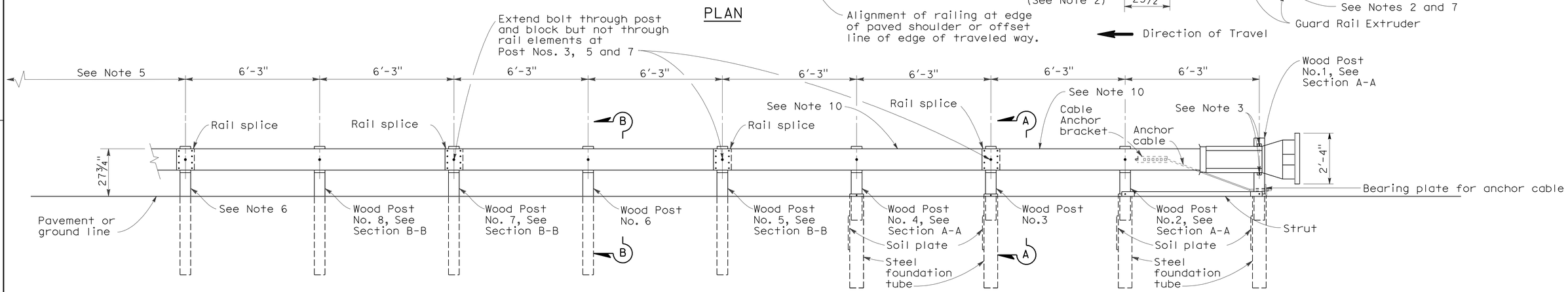

ELEVATION

TERMINAL SYSTEM (TYPE ET)

(Type ET PLUS shown)
See Notes 9 and 10

CONSTRUCTION DETAILS
(ALTERNATIVE IN-LINE TERMINAL SYSTEM)

NO SCALE

C-43

STATE OF CALIFORNIA - DEPARTMENT OF TRANSPORTATION
Caltrans
CONSULTANT FUNCTIONAL SUPERVISOR: MIKE CHESNEY
CALCULATED-DESIGNED BY: STEVEN NGUYEN
CHECKED BY: JOSUE VAGLIENTY
REVISED BY
DATE REVISED

LAST REVISION 06-08-10
DATE PLOTTED => 13-AUG-2012
TIME PLOTTED => 12:50

Dist	COUNTY	ROUTE	POST MILES TOTAL PROJECT	SHEET No.	TOTAL SHEETS
12	Ora	91	0.9/5.4	99	885

REGISTERED CIVIL ENGINEER 8/8/12 DATE

8-13-12
PLANS APPROVAL DATE

REGISTERED PROFESSIONAL ENGINEER JOSUE J. VAGLIENTY No. 70783 Exp. 6-30-13 CIVIL STATE OF CALIFORNIA

THE STATE OF CALIFORNIA OR ITS OFFICERS OR AGENTS SHALL NOT BE RESPONSIBLE FOR THE ACCURACY OR COMPLETENESS OF SCANNED COPIES OF THIS PLAN SHEET.

RBF CONSULTING
14725 ALTON PKWY
IRVINE, CA 92618

OCTA
550 S. MAIN STREET
ORANGE, CA 92863

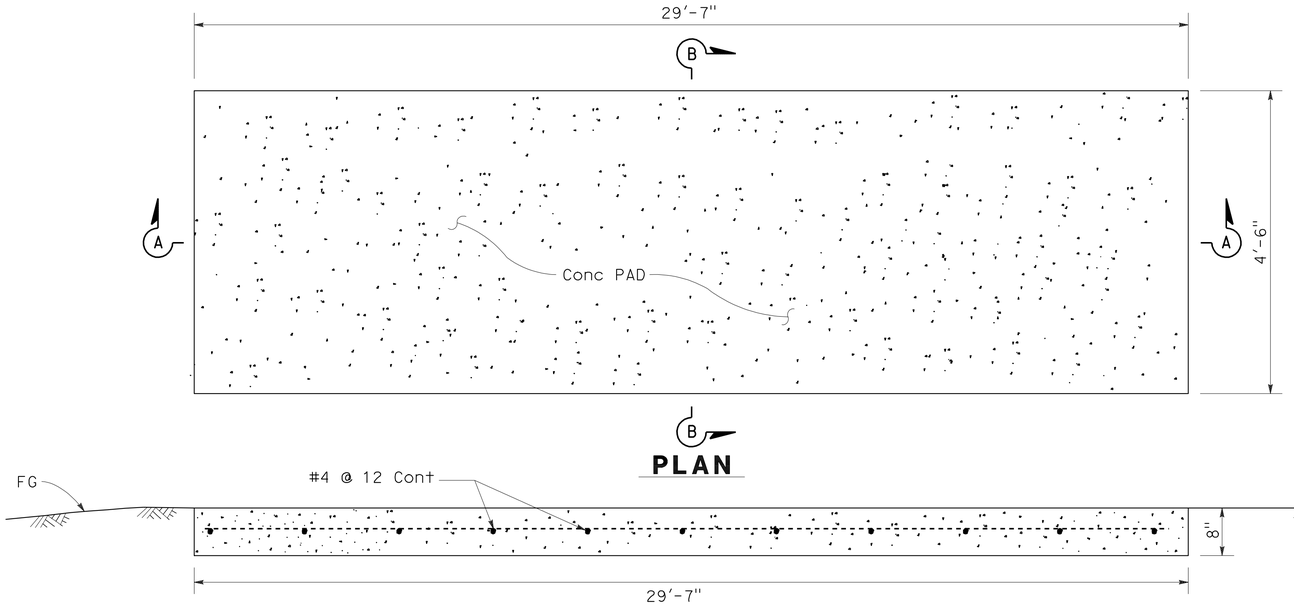

PLAN

SECTION A-A
CONCRETE ANCHOR SLAB

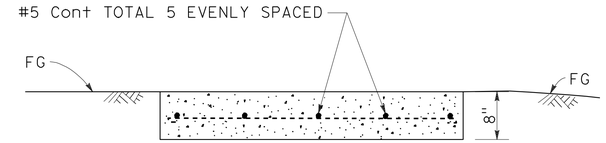

SECTION B-B

NOTES:

1. For additional details of this crash cushion, refer to manufacturer's installation instructions.
2. The base track frame with cylinders attached comes from the manufacturer as a completely pre-assembled unit.
3. Place the crash cushion unit on the cured concrete anchor slab and use the base track frame of the crash cushion as a template for drilling anchor bolt holes. Drill holes in slab and attach crash cushion with wedge anchor bolts supplied by the manufacturer.
4. Attach last cylinder to concrete backup block with manufacturer supplied fastener in such manner as recommended by the manufacturer.
5. Attach the manufacturer supplied side cable anchor plates to the cured concrete backup block with the manufacturer supplied bolts in such manner as recommended by the manufacturer.
6. Place manufacturer supplied cover over cylinders and attach cover to cylinders with manufacturer supplied fasteners.

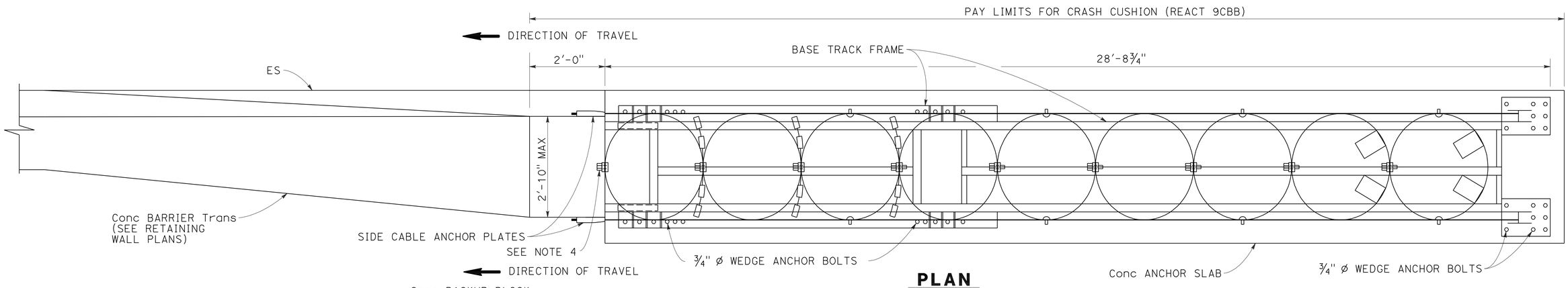

PLAN

LEGEND:
9CBB = 9 CYLINDER CUSHION WITH CONCRETE BACKUP BLOCK

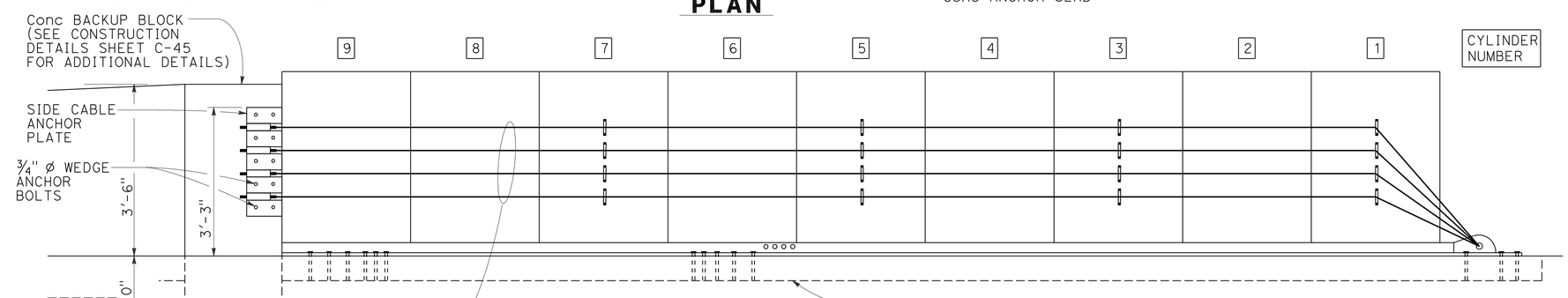

ELEVATION
CRASH CUSHION (REACT 9CBB)

CONSTRUCTION DETAILS
(CRASH CUSHION REACT 9CBB)
NO SCALE

C-44

STATE OF CALIFORNIA - DEPARTMENT OF TRANSPORTATION
Caltrans
CONSULTANT FUNCTIONAL SUPERVISOR: MIKE CHESNEY
CALCULATED-DESIGNED BY: STEVEN NGUYEN
CHECKED BY: JOSUE VAGLIENTY
REVISED BY
DATE REVISED

LAST REVISION 06-08-10 | DATE PLOTTED => 13-AUG-2012 | TIME PLOTTED => 12:50

Dist	COUNTY	ROUTE	POST MILES TOTAL PROJECT	SHEET No.	TOTAL SHEETS
12	Ora	91	0.9/5.4	100	885

REGISTERED CIVIL ENGINEER 8/8/12 DATE

8-13-12
PLANS APPROVAL DATE

REGISTERED PROFESSIONAL ENGINEER JOSUE J. VAGLIENTY No. 70783 Exp. 6-30-13 CIVIL STATE OF CALIFORNIA

THE STATE OF CALIFORNIA OR ITS OFFICERS OR AGENTS SHALL NOT BE RESPONSIBLE FOR THE ACCURACY OR COMPLETENESS OF SCANNED COPIES OF THIS PLAN SHEET.

RBF CONSULTING
14725 ALTON PKWY
IRVINE, CA 92618

OCTA
550 S. MAIN STREET
ORANGE, CA 92863

NOTE:

1. For additional details of Crash Cushion (Type REACT 9CBB), see Construction Details Sheet C-44.

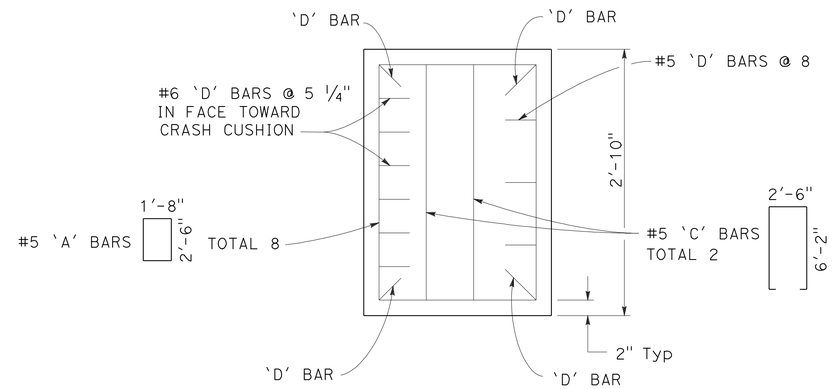

PLAN

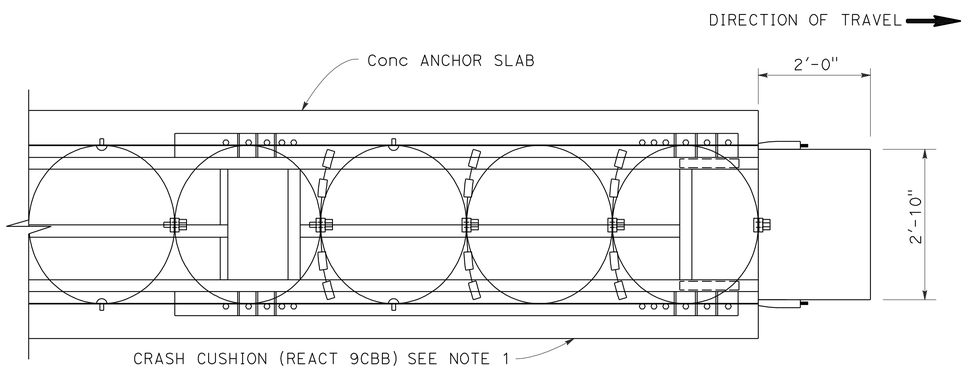

PLAN

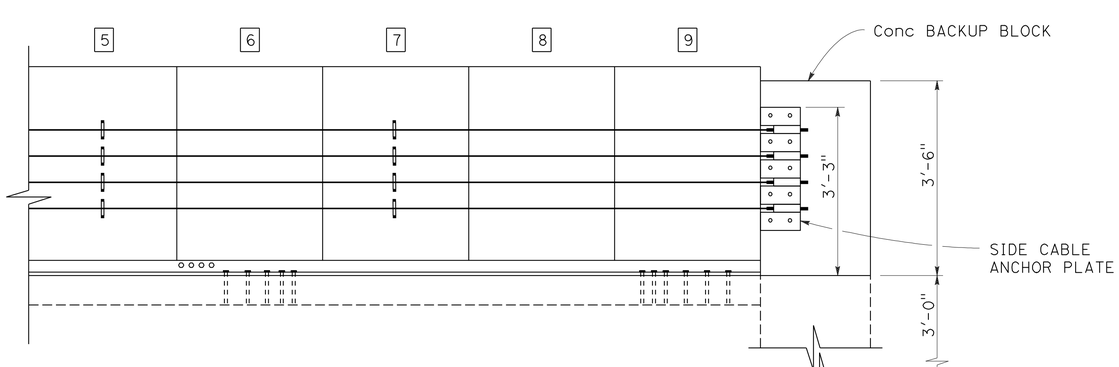

ELEVATION

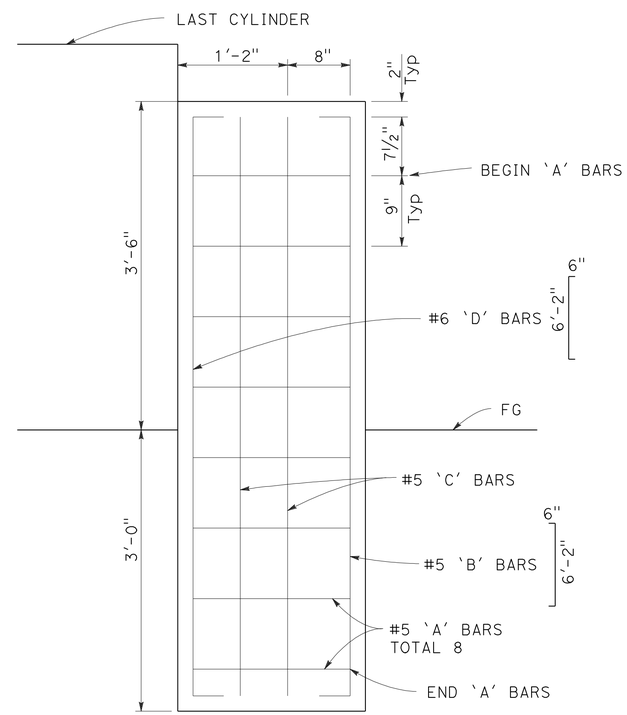

ELEVATION
CONCRETE BACKUP BLOCK

CONSTRUCTION DETAILS
(CRASH CUSHION REACT 9CBB)
NO SCALE

C-45

STATE OF CALIFORNIA - DEPARTMENT OF TRANSPORTATION
Caltrans

CONSULTANT FUNCTIONAL SUPERVISOR: MIKE CHESNEY
CALCULATED-DESIGNED BY: STEVEN NGUYEN
CHECKED BY: JOSUE VAGLIENTY
REVISED BY
DATE REVISED

LAST REVISION 06-08-10 | DATE PLOTTED => 13-AUG-2012 | TIME PLOTTED => 12:50