DIST	COUNTY	ROUTE	POST MILES TOTAL PROJECT	SHEET No.	TOTAL SHEETS
12	Ora	91	8.1/9.3,10.1	301	357

Quanyan Liao 1-29-13
REGISTERED CIVIL ENGINEER DATE

4-15-13
PLANS APPROVAL DATE

REGISTERED PROFESSIONAL ENGINEER Quanyan Liao No. C68870 Exp. 9-30-13 CIVIL STATE OF CALIFORNIA

The State of California or its officers or agents shall not be responsible for the accuracy or completeness of electronic copies of this plan sheet.

This LOTB sheet was prepared in accordance with the Caltrans Soil & Rock Logging, Classification, & Presentation Manual (2010 Edition).

See 2010 Standard Plans A10F and A10G for Soil Legend, and A10H for Rock Legend.

FOR PLAN VIEW, SEE
"LOG OF TEST BORINGS 1 OF 8"

Notes:

1. Ground water was encountered, but elevation was not measured.
2. Top of surface water was measured at elevations 233.3′ and 233.6′ for Boring Nos. R-12-026 and R-12-027 respectively, on 5/15/12.

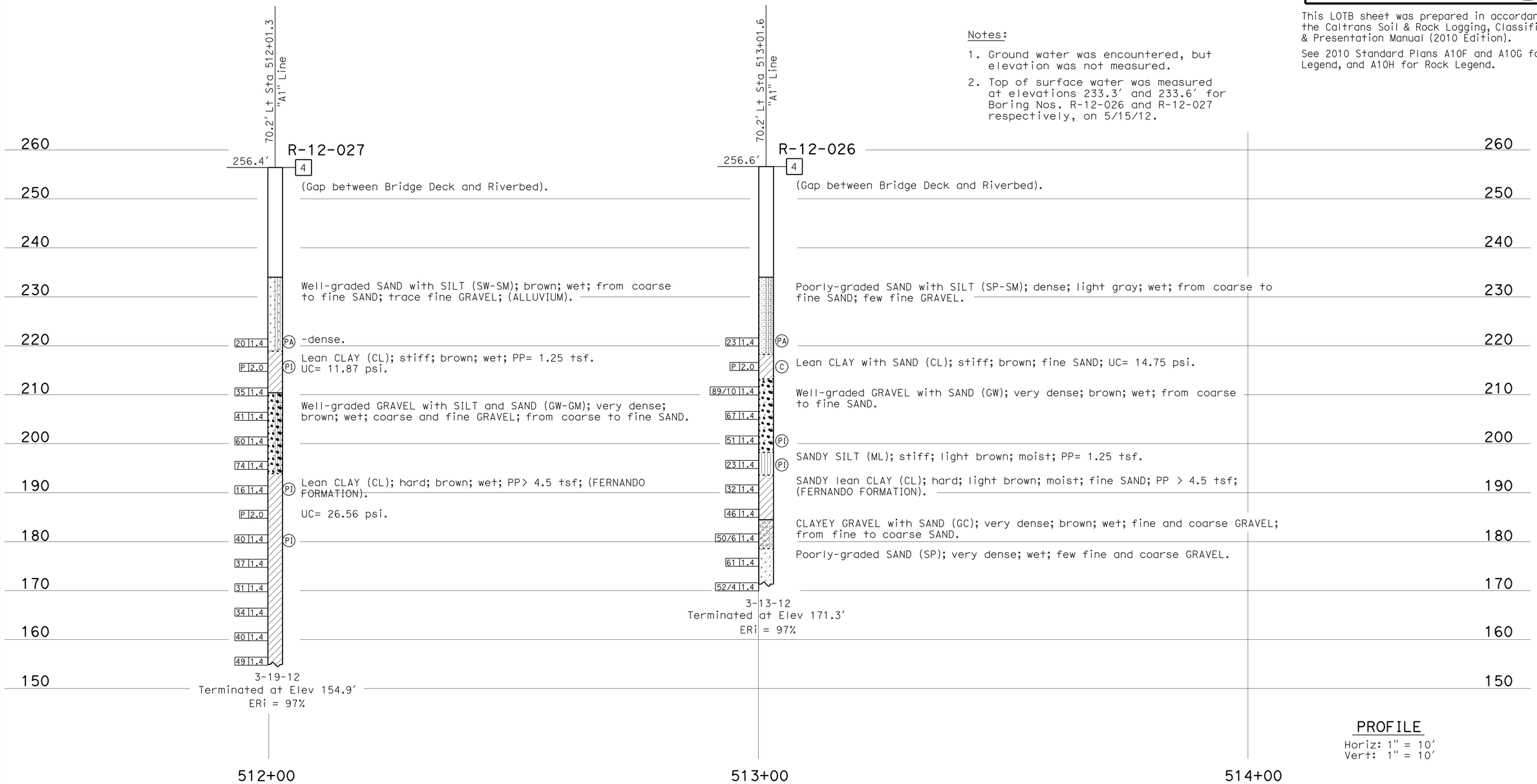

PROFILE
Horiz: 1" = 10′
Vert: 1" = 10′

ENGINEERING SERVICES	MATERIALS AND GEOTECHNICAL SERVICES	STATE OF CALIFORNIA DEPARTMENT OF TRANSPORTATION	DIVISION OF ENGINEERING SERVICES STRUCTURE DESIGN DESIGN BRANCH 19	BRIDGE NO. 55-0106R/L POST MILE 8.57	SANTA ANA RIVER BRIDGE (WIDEN) LOG OF TEST BORINGS 4 OF 8
FUNCTIONAL SUPERVISOR NAME: S. Karimi	DRAWN BY: F. Nguyen CHECKED BY: A. Mehrazar	FIELD INVESTIGATION BY: Q. Liao, M. Ahmed			

OGS CIVIL LOG OF TEST BORINGS SHEET

ORIGINAL SCALE IN INCHES FOR REDUCED PLANS 0 1 2 3

UNIT: 3643
PROJECT NUMBER & PHASE: 12000000781 CONTRACT NO.: 12-0C5601

DISREGARD PRINTS BEARING EARLIER REVISION DATES

REVISION DATES: 11-06-12 01-29-13 12-18-12 01-22-13

SHEET 41 OF 45

FILE => 55-0106-z-ltb04.dgn

USERNAME => s121614 DATE PLOTTED => 24-APR-2013 TIME PLOTTED => 11:48

DIST	COUNTY	ROUTE	POST MILES TOTAL PROJECT	SHEET No.	TOTAL SHEETS
12	Ora	91	8.1/9.3,10.1	302	357

REGISTERED CIVIL ENGINEER 1-29-13 DATE

4-15-13
PLANS APPROVAL DATE

REGISTERED PROFESSIONAL ENGINEER M. Mushtaq Ahmed No. C056390 Exp. 6-30-13 CIVIL STATE OF CALIFORNIA

The State of California or its officers or agents shall not be responsible for the accuracy or completeness of electronic copies of this plan sheet.

This LOTB sheet was prepared in accordance with the Caltrans Soil & Rock Logging, Classification, & Presentation Manual (2010 Edition).

See 2010 Standard Plans A10F and A10G for Soil Legend, and A10H for Rock Legend.

FOR PLAN VIEW, SEE
"LOG OF TEST BORINGS 1 OF 8"

Notes:

1. Ground water was encountered, but elevation was not measured.
2. Top of surface water was measured at elevation 233.3′ for Boring No. R-12-025 on 5/15/12.

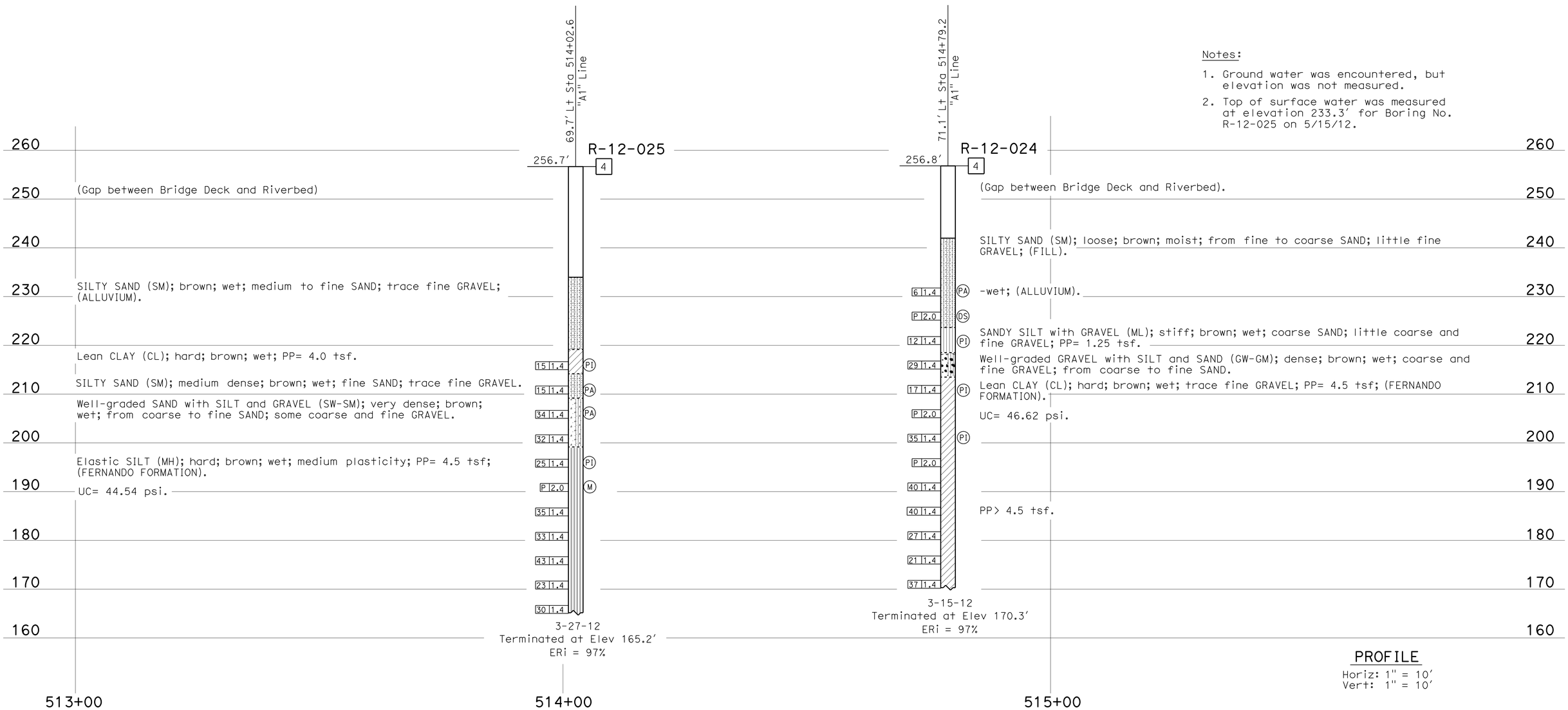

PROFILE
Horiz: 1" = 10′
Vert: 1" = 10′

ENGINEERING SERVICES	MATERIALS AND GEOTECHNICAL SERVICES	STATE OF CALIFORNIA DEPARTMENT OF TRANSPORTATION	DIVISION OF ENGINEERING SERVICES STRUCTURE DESIGN DESIGN BRANCH 19	BRIDGE NO. 55-0106R/L POST MILE 8.57	SANTA ANA RIVER BRIDGE (WIDEN) LOG OF TEST BORINGS 5 OF 8
FUNCTIONAL SUPERVISOR NAME: S. Karimi	DRAWN BY: F. Nguyen CHECKED BY: A. Mehrazar	FIELD INVESTIGATION BY: M. Ahmed			

OGS CIVIL LOG OF TEST BORINGS SHEET

ORIGINAL SCALE IN INCHES FOR REDUCED PLANS 0 1 2 3

UNIT: 3643
PROJECT NUMBER & PHASE: 12000000781 CONTRACT NO.: 12-0C5601

DISREGARD PRINTS BEARING EARLIER REVISION DATES

REVISION DATES 11-06-12 01-29-13 12-18-12 01-22-13

SHEET 42 OF 45

FILE => 55-0106-z-ltb05.dgn

USERNAME => s121614 DATE PLOTTED => 24-APR-2013 TIME PLOTTED => 11:48

DIST	COUNTY	ROUTE	POST MILES TOTAL PROJECT	SHEET No.	TOTAL SHEETS
12	Ora	91	8.1/9.3,10.1	303	357

REGISTERED CIVIL ENGINEER 1-29-13 DATE

4-15-13
PLANS APPROVAL DATE

REGISTERED PROFESSIONAL ENGINEER
Quanyan Liao
No. C68870
Exp. 9-30-13
CIVIL
STATE OF CALIFORNIA

The State of California or its officers or agents shall not be responsible for the accuracy or completeness of electronic copies of this plan sheet.

This LOTB sheet was prepared in accordance with the Caltrans Soil & Rock Logging, Classification, & Presentation Manual (2010 Edition).

See 2010 Standard Plans A10F and A10G for Soil Legend, and A10H for Rock Legend.

FOR PLAN VIEW, SEE
"LOG OF TEST BORINGS 1 OF 8"

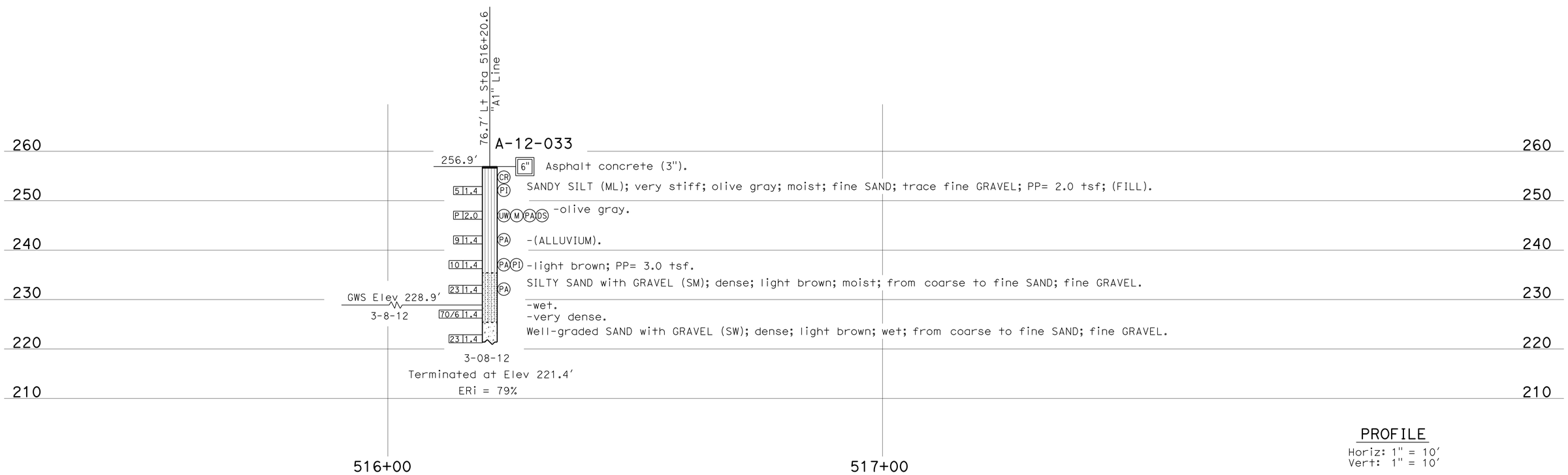

PROFILE
Horiz: 1" = 10'
Vert: 1" = 10'

ENGINEERING SERVICES	MATERIALS AND GEOTECHNICAL SERVICES	STATE OF CALIFORNIA DEPARTMENT OF TRANSPORTATION	DIVISION OF ENGINEERING SERVICES STRUCTURE DESIGN DESIGN BRANCH 19	BRIDGE NO. 55-0106R/L POST MILE 8.57	SANTA ANA RIVER BRIDGE (WIDEN) LOG OF TEST BORINGS 6 OF 8
FUNCTIONAL SUPERVISOR NAME: S. Karimi	DRAWN BY: F. Nguyen CHECKED BY: A. Mehrazar	FIELD INVESTIGATION BY: M. Islam			

OGS CIVIL LOG OF TEST BORINGS SHEET

ORIGINAL SCALE IN INCHES FOR REDUCED PLANS 0 1 2 3

UNIT: 3643
PROJECT NUMBER & PHASE: 12000000781 CONTRACT NO.: 12-0C5601

DISREGARD PRINTS BEARING EARLIER REVISION DATES

REVISION DATES: 11-06-12 01-29-13 12-18-12 01-22-13

SHEET 43 OF 45

FILE => 55-0106-z-1tb06.dgn

USERNAME => s12614 DATE PLOTTED => 24-APR-2013 TIME PLOTTED => 11:48

Grade	Prefix	Number	Suffix	Sheet No.	Total Sheets
07	040	91	31/R	314	323

Signature on file

Date signed: April 19, 1965

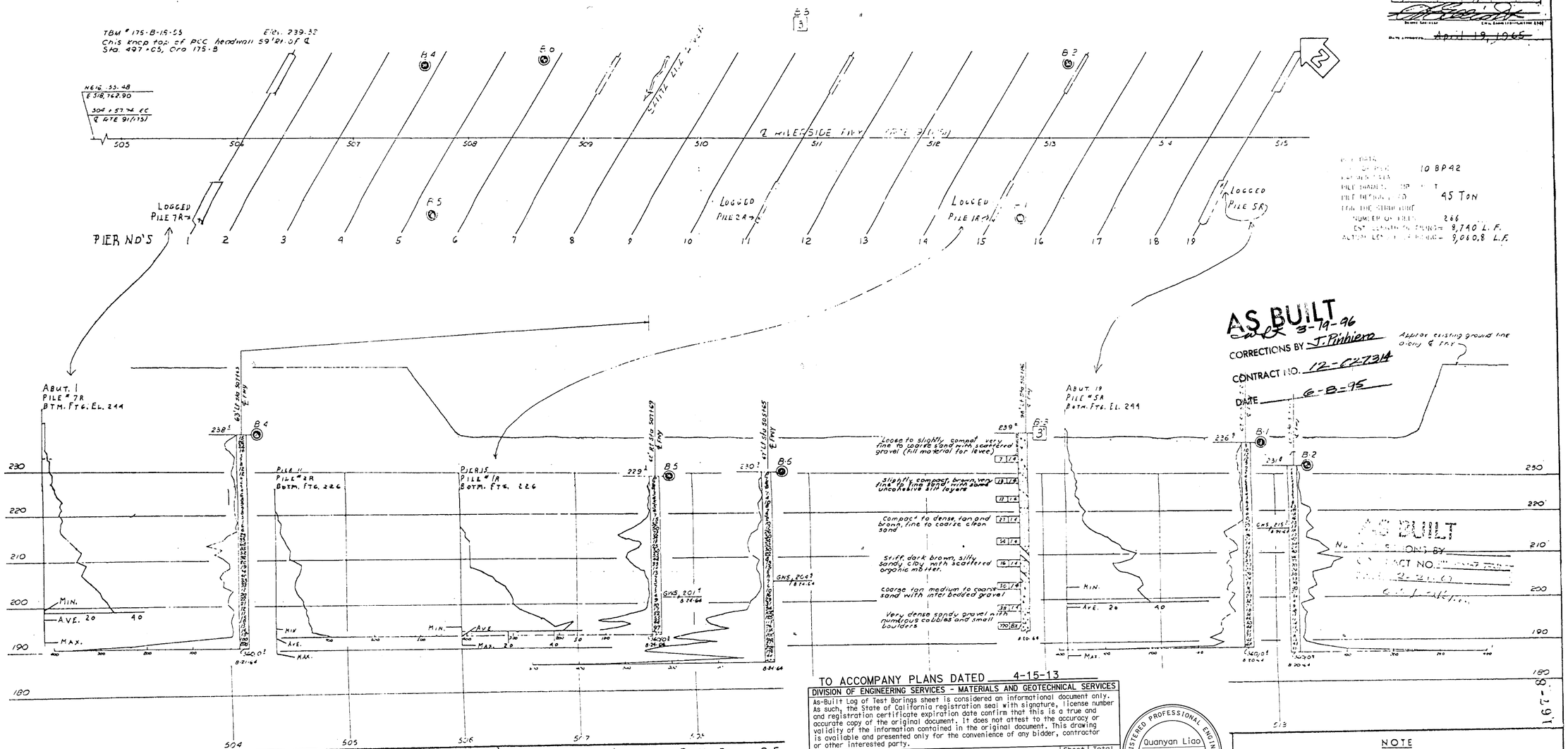

TO ACCOMPANY PLANS DATED 4-15-13

DIVISION OF ENGINEERING SERVICES - MATERIALS AND GEOTECHNICAL SERVICES

As-Built Log of Test Borings sheet is considered an informational document only. As such, the State of California registration seal with signature, license number and registration certificate expiration date confirm that this is a true and accurate copy of the original document. It does not attest to the accuracy or validity of the information contained in the original document. This drawing is available and presented only for the convenience of any bidder, contractor or other interested party.

DIST.	COUNTY	ROUTE	POST MILE-TOTAL PROJECT	Sheet No.	Total Sheets
12	Ora	91	8.1/9.3,10.1	304	357

Quanyan Liao 1/29/2013
REGISTERED CIVIL ENGINEER DATE

REGISTERED PROFESSIONAL ENGINEER — Quanyan Liao — No. C68870 — Exp. 9-30-13 — CIVIL — STATE OF CALIFORNIA

SANTA ANA RIVER BRIDGE (WIDEN)

LOG OF TEST BORINGS 7 OF 8

UNIT: 3643	CONTRACT No.	BRIDGE No.
PROJ. No. & PHASE: 12000000781	12-0C5601	55-0106R/L

VERT DATUM: NGVD29 CONVERSION: NAVD88= NGVD29 +2.0 FT — Sheet 44 of 45

NOTE: A COPY OF THIS LOG OF TEST BORINGS IS AVAILABLE AT OFFICE OF STRUCTURE MAINTENANCE AND INVESTIGATIONS, SACRAMENTO, CALIFORNIA

NOTE

Classification of earth material as shown on this sheet is based upon field inspection and is not to be construed to imply mechanical analysis.

STATE OF CALIFORNIA
DEPARTMENT OF PUBLIC WORKS
DIVISION OF HIGHWAYS

SANTA ANA RIVER BRIDGE (WIDEN)

LOG OF TEST BORINGS.

SCALE NONE | BRIDGE 55-106 R/L | FILE | DRAWING 55106-15.

CLASSIFICATION OF MATERIAL BASED ON STANDARD GRADE SIZE LIMITS

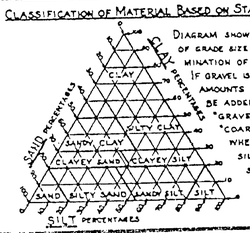

DIAGRAM SHOWING THE BASIS FOR ESTIMATES OF GRADE SIZE DISTRIBUTION USED IN DETERMINATION OF CLASS NAMES. IF GRAVEL IS PRESENT IN APPRECIABLE AMOUNTS THE TERM "GRAVELLY" MAY BE ADDED TO THE CLASS NAME, VIZ. "GRAVELLY SAND." THE TERMS "COARSE", "MEDIUM" AND "FINE" WHEN USED TO DESCRIBE SAND, SILT AND GRAVEL REFER TO STANDARD GRADE SIZE LIMITS.

LEGEND OF EARTH MATERIALS

- Gravel
- Sand
- Silt
- Clay
- Sandy Clay or Clayey Sand
- Sandy Silt or Silty Sand
- Silty Clay or Clayey Silt
- Peat and/or Organic Matter
- Fill Material
- Igneous Rock
- Sedimentary Rock
- Metamorphic Rock

LEGEND OF

- Penetrometer
- 2¼" Cone Penetrometer
- Sampler boring (dry)
- Rotary boring (wet)
- Auger boring (dry)
- Jet boring
- Core boring
- Test pit

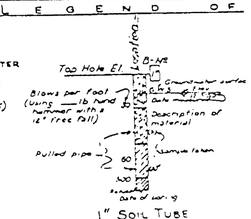

NOTE:
ADDITIONAL AS-BUILT FOUNDATION DATA MAY BE AVAILABLE AT THE DIVISION OF NEW TECHNOLOGY, MATERIALS AND RESEARCH 5900 FOLSOM BOULEVARD, SACRAMENTO, CALIFORNIA 95819

DESIGN OVERSIGHT
10/31/92
SIGN OFF DATE

DESIGN	BY	CHECKED
DETAILS	BY	CHECKED
QUANTITIES	BY	CHECKED

ORIGINAL SCALE IN INCHES FOR REDUCED PLANS 0 1 2 3

PREPARED FOR THE STATE OF CALIFORNIA DEPARTMENT OF TRANSPORTATION

ANDY CHEN
PROJECT ENGINEER

CU 12207
EA 027311

BRIDGE NO. 55-106 R/L
POST MILE 8.57

SANTA ANA RIVER BRIDGE (WIDEN)
AS-BUILT LOG OF TEST BORINGS

DISREGARD PRINTS BEARING EARLIER REVISION DATES →
REVISION DATES (PRELIMINARY STAGE ONLY) SHEET OF

55-0106-z-ltb07.tif

DIST.	COUNTY	ROUTE	SECTION	SHEET NO.	TOTAL SHEETS
VII	ORA	175	B	10	10

June 1, 1953

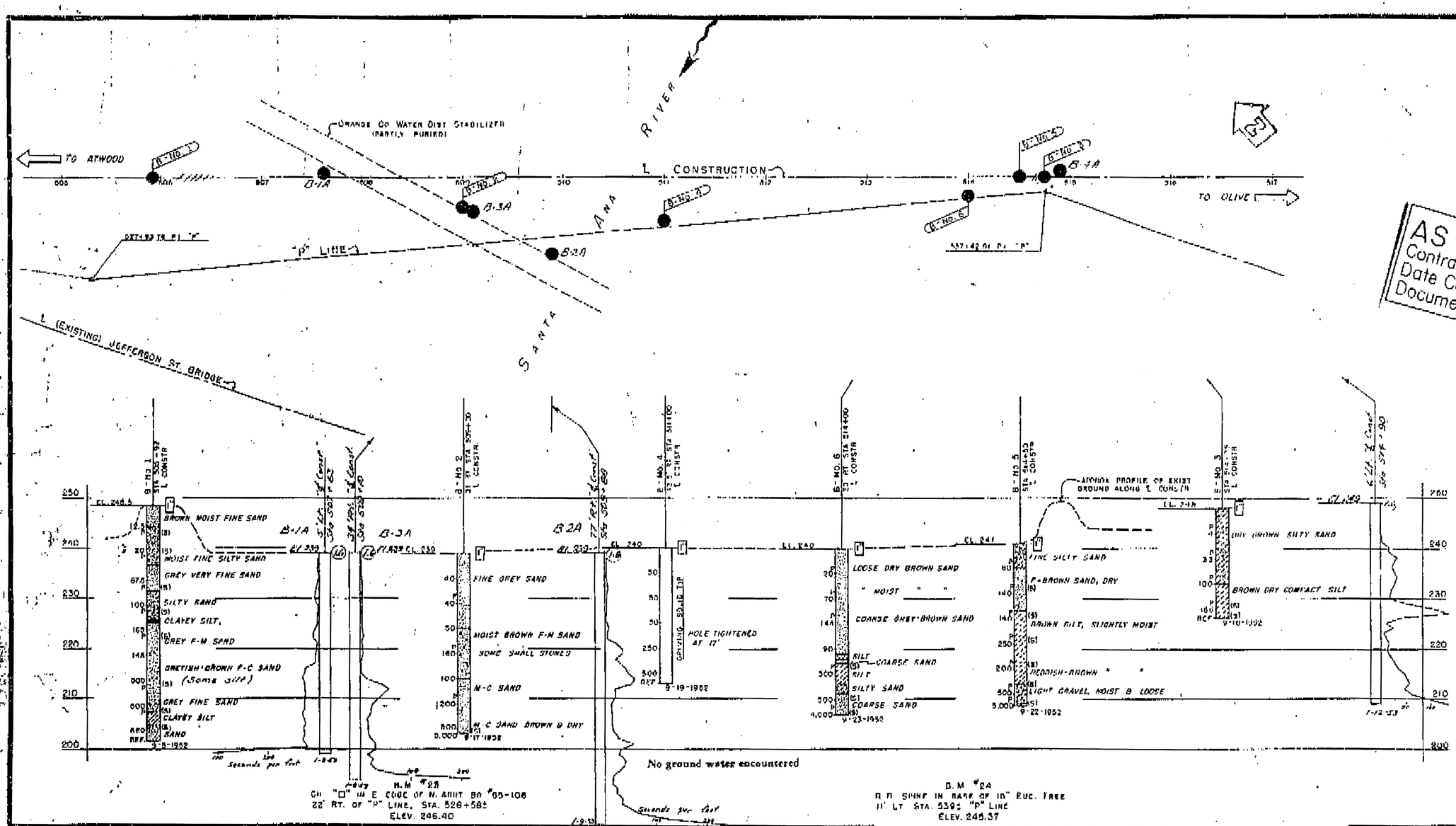

AS BUILT PLANS
Contract No. 54-14466
Date Completed
Document No. 7000-2063

Test Boring By Bridge Dept.
SEPT 1952 JAN 1953

AS BUILT
CORRECTIONS BY
DATE July 15, 1954
No Change

TO ACCOMPANY PLANS DATED 4-15-13

DIVISION OF ENGINEERING SERVICES - MATERIALS AND GEOTECHNICAL SERVICES

As-Built Log of Test Borings sheet is considered an informational document only. As such, the State of California registration seal with signature, license number and registration certificate expiration date confirm that this is a true and accurate copy of the original document. It does not attest to the accuracy or validity of the information contained in the original document. This drawing is available and presented only for the convenience of any bidder, contractor or other interested party.

DIST.	COUNTY	ROUTE	POST MILE-TOTAL PROJECT	Sheet No.	Total Sheets
12	Ora	91	8.1/9.3,10.1	305	357

Quanyan Liao 1/29/2013
REGISTERED CIVIL ENGINEER DATE

REGISTERED PROFESSIONAL ENGINEER
Quanyan Liao
No. C68870
Exp. 9-30-13
CIVIL
STATE OF CALIFORNIA

SANTA ANA RIVER BRIDGE (WIDEN)

LOG OF TEST BORINGS 8 OF 8

UNIT: 3643	CONTRACT No. 12-0C5601	BRIDGE No. 55-0106R/L
PROJ. No. & PHASE: 12000000781		

VERT DATUM: NGVD29 CONVERSION: NAVD88= NGVD29 +2.0 FT Sheet 45 of 45

NOTE: A COPY OF THIS LOG OF TEST BORINGS IS AVAILABLE AT OFFICE OF STRUCTURE MAINTENANCE AND INVESTIGATIONS, SACRAMENTO, CALIFORNIA

CLASSIFICATION OF MATERIAL, BASED ON STANDARD GRADE SIZE LIMITS

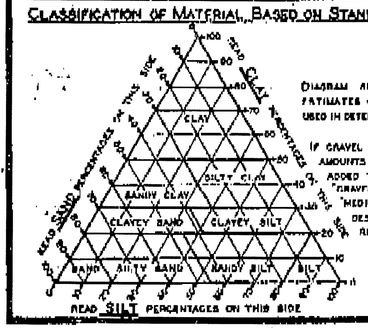

DIAGRAM SHOWING THE BASIS FOR ESTIMATES OF GRADE SIZE DISTRIBUTION USED IN DETERMINATION OF CLASS NAMES

IF GRAVEL IS PRESENT IN APPRECIABLE AMOUNTS THE TERM "GRAVELLY" MAY BE ADDED TO THE CLASS NAME, VIA "GRAVELLY SAND". THE TERMS "COARSE", "MEDIUM" AND "FINE" WHICH USED TO DESCRIBE GRAVEL, SAND AND SILT REFER TO STANDARD GRADE SIZE LIMITS.

LEGEND OF EARTH MATERIALS

- GRAVEL
- SAND
- SILT
- CLAY
- SANDY CLAY OR CLAYEY SAND
- SANDY SILT OR SILTY SAND
- SILTY CLAY OR CLAYEY SILT
- PEAT AND/OR ORGANIC CLAY
- FILLED MATERIAL
- IGNEOUS ROCK
- SEDIMENTARY ROCK
- METAMORPHIC ROCK

- PLAN OF ANY BORING
- PENETROMETER
- 2¼" CONE PENETROMETER
- SAMPLER BORING (DRY)
- ROTARY BORING (WET)
- AUGER BORING (DRY)
- JET BORING
- CORE BORING
- TEST PIT

NOTES

THE CONTRACTOR'S ATTENTION IS DIRECTED TO SECTION 2, ARTICLE (c) OF THE STANDARD SPECIFICATIONS AND TO THE SPECIAL PROVISIONS ACCOMPANYING THIS SET OF PLANS.

CLASSIFICATION OF EARTH MATERIAL AS SHOWN ON THIS SHEET IS BASED UPON FIELD INSPECTION AND IS NOT TO BE CONSTRUED TO IMPLY MECHANICAL ANALYSIS.

PENETROMETER BORINGS HAVING A RATE OF PENETRATION MEASURED IN SECONDS PER FOOT ARE DRIVEN WITH A NO. 8 WEMPLEMAN-TERRY AIR HAMMER AT 115 PSI.

STATE OF CALIFORNIA
DEPARTMENT OF PUBLIC WORKS
DIVISION OF HIGHWAYS

SANTA ANA RIVER

LOG OF TEST BORINGS

SCALE: HORIZ. 1" = 50' VERT. 1" = 10' | BRIDGE 55-106 | FILE | DRAWING L-2974-10

BRIDGE DEPARTMENT

55-0106-z-ltb08.tif

DIST	COUNTY	ROUTE	POST MILES TOTAL PROJECT	SHEET No.	TOTAL SHEETS
12	Ora	91	8.1/9.3,10.1	306	357

REGISTERED CIVIL ENGINEER 01-25-13 DATE

4-15-13
PLANS APPROVAL DATE

REGISTERED PROFESSIONAL ENGINEER WIE-KUNG HSIA No. C50210 Exp. 06-30-13 CIVIL STATE OF CALIFORNIA

The State of California or its officers or agents shall not be responsible for the accuracy or completeness of electronic copies of this plan sheet.

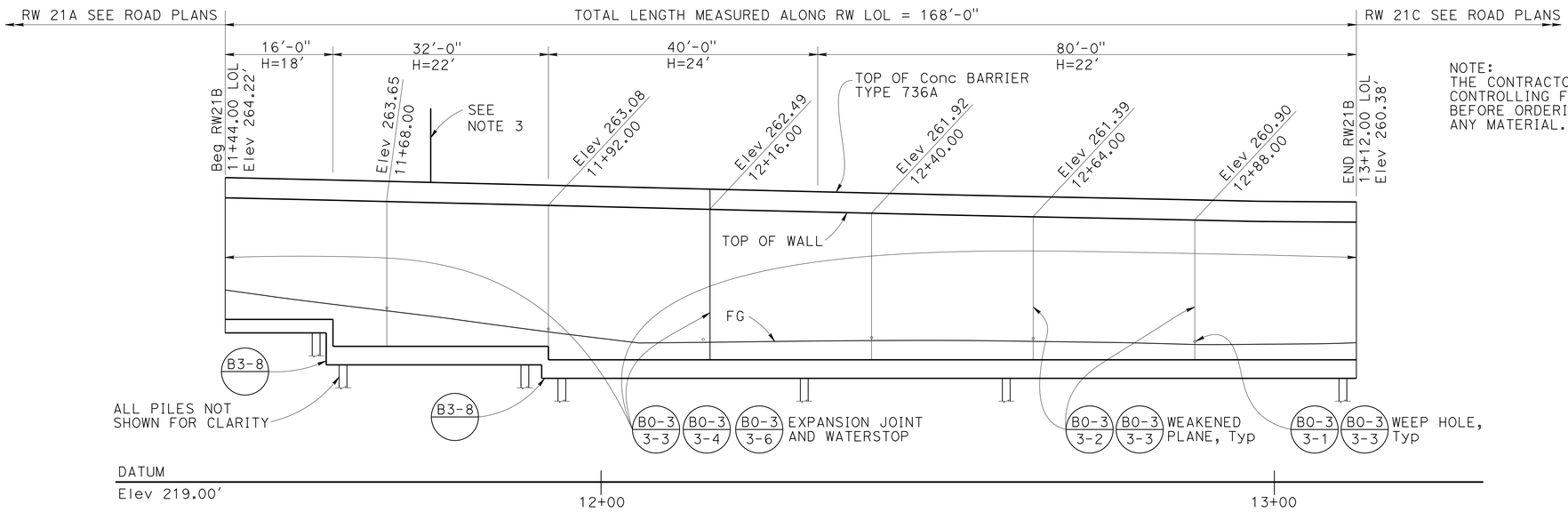

NOTE:
THE CONTRACTOR SHALL VERIFY ALL CONTROLLING FIELD DIMENSIONS BEFORE ORDERING OR FABRICATING ANY MATERIAL.

MIRRORED DEVELOPED ELEVATION

1"=10'

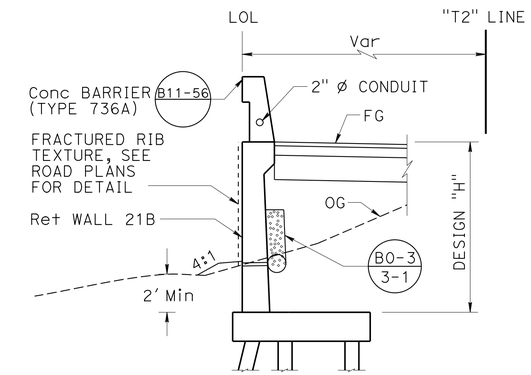

TYPICAL SECTION

NO SCALE

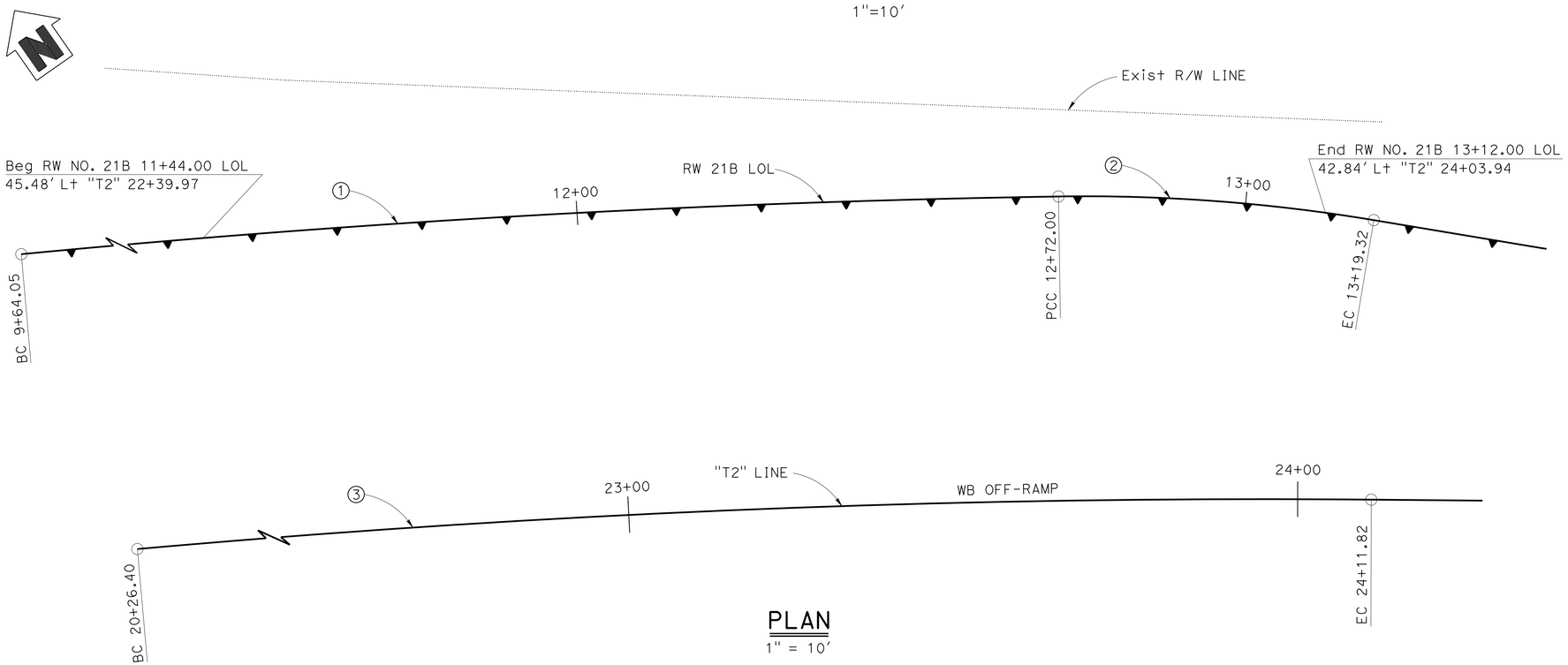

PLAN

1" = 10'

NOTES:

1. ALL DIMENSIONS MEASURED ALONG RETAINING WALL LOL.
2. TOP OF WALL ELEVATIONS MEASURED ALONG RETAINING WALL LOL.
3. ELECTROLIER, SEE ROAD PLANS

CURVE DATA

No.	R	Δ	T	L
1	1945.48'	09°04'10"	154.30'	307.95'
2	261.48'	10°22'09"	23.73'	47.32'
3	1900.00'	11°37'22"	193.38'	385.43'

QUANTITIES

STRUCTURE EXCAVATION (RETAINING WALL)	633	CY
STRUCTURE EXCAVATION (TYPE Y-1) (AERIALLY DEPOSITED LEAD)	51	CY
STRUCTURE BACKFILL (RETAINING WALL)	1,628	CY
PREVIOUS BACKFILL MATERIAL (RETAINING WALL)	93	CY
FURNISH PILING (CLASS 200) (ALTERNATIVE X)	6,015	LF
DRIVE PILE (CLASS 200) (ALTERNATIVE X)	119	EA
STRUCTURAL CONCRETE, RETAINING WALL	442	CY
FRACTURED RIB TEXTURE	3,554	SQFT
BAR REINFORCING STEEL (RETAINING WALL)	93,305	LB
CONCRETE BARRIER (TYPE 736)	168	LF

BARTT GUNTER
DESIGN ENGINEER

	BY	CHECKED
DESIGN	CHARLES LOMICKA	ARNEL VEGA
DETAILS	HENGAMEH MAHBOOBI	ARNEL VEGA
QUANTITIES	CHARLES LOMICKA	ARNEL VEGA

LOAD & RESISTANCE FACTOR DESIGN — LIVE LOADING: HL93 W/"LOW-BOY"; PERMIT DESIGN VEHICLE

	BY	CHECKED
LAYOUT	CHARLES LOMICKA	ARNEL VEGA
SPECIFICATIONS	THERESA NEDWICK	PLANS AND SPECS COMPARED X

ORIGINAL SCALE IN INCHES FOR REDUCED PLANS 0 1 2 3

STATE OF CALIFORNIA
DEPARTMENT OF TRANSPORTATION

DIVISION OF ENGINEERING SERVICES
STRUCTURE DESIGN
DESIGN BRANCH 19

BRIDGE NO. 55E0146
POST MILE 8.41

RETAINING WALL NO. 21B
GENERAL PLAN

UNIT: 3621
PROJECT NUMBER & PHASE: 1200000078 - 1 CONTRACT NO.: 0C5601

DISREGARD PRINTS BEARING EARLIER REVISION DATES

REVISION DATES: 10-02-12 01-25-13 01-28-13

SHEET 1 OF 6

USERNAME => s12614 DATE PLOTTED => 24-APR-2013 TIME PLOTTED => 11:48

STRUCTURES DESIGN GENERAL PLAN SHEET (ENGLISH) (REV.09-01-10)

FILE => 55e-0146-rw21b-a-gp01.dgn

DIST	COUNTY	ROUTE	POST MILES TOTAL PROJECT	SHEET No.	TOTAL SHEETS
12	Ora	91	8.1/9.3,10.1	307	357

REGISTERED CIVIL ENGINEER 01-25-13 DATE

4-15-13
PLANS APPROVAL DATE

REGISTERED PROFESSIONAL ENGINEER WEI-KUNG HSIA No. C50210 Exp. 06-30-13 CIVIL STATE OF CALIFORNIA

The State of California or its officers or agents shall not be responsible for the accuracy or completeness of electronic copies of this plan sheet.

DESIGN DATA

Design: AASHTO LRFD Bridge Design Specifications 4th edition with California Amendments

WS: 33 psf on barrier

LS: Varied surcharge on level ground surface

CT: 54 kip maximum traffic impact loading evenly distributed over 10 feet at top of the barrier and 1:1 distribution down and outward

EQE: Mononabe-Okabe Method
K_h = 0.3
K_v = 0.0

Retained Soil Behind Retaining wall: Ø = 34°
γ = 120 pcf

Reinforced Concrete: f'c = 3600 psi
fy = 60,000 psi

Load Combinations and Limit States

Service I Q=1.00DC+1.00EV+1.00EH+1.00LS+0.30WS

Service II Q=1.00DC+1.00EV+1.00EH+1.00WS

Strength I Q=aDC+BEV+1.50EH+1.75LS
Q=1.25DC+1.35EV+0.90EH+1.75LS (for piles at heel)

Strength III Q=aDC+BEV+1.50EH+1.40WS

Strength V Q=aDC+BEV+1.50EH+1.35LS+0.40WS

Extreme I Q=1.00DC+1.00EV+1.00EH+1.00EQD+1.00EQE

Extreme II Q=1.00DC+1.00EV+1.00EH+1.00CT

Where:

Q: Force Effects
a: 1.25 or 0.90, Which ever Controls Design
B: 1.35 or 1.00, which ever Controls Design
DC: Dead Load of Structure Components
EV: Vertical Earth Fill Pressure
LS: Live Load Surcharge
EQE: Seismic Earth Pressure
EQD: Soil and Structure Components Inertia. Soil inertia ignored for stem design
WS: Wind Load on Sound Wall and Barrier
CT: Vehicular Collision Force

PILE DATA TABLE

LOCATION	WALL HEIGHT (ft)	PILE TYPE	NOMINAL RESISTANCE (kips)		DESIGN TIP ELEVATION (ft) *	SPECIFIED TIP ELEVATION (ft)	NOMINAL DRIVING RESISTANCE REQUIRED (kips)
			COMPRESSION	TENSION			
Sta 11+44.00 TO Sta 11+60.00	18	CLASS 200 Alt X	180	0	189.0	189.0	340
Sta 11+60.00 TO Sta 11+92.00	22		180	0	189.0	189.0	340
Sta 11+92.00 TO Sta 12+32.00	24		180	80	189.0	189.0	340
Sta 12+32.00 TO Sta 13+12.00	22		180	0	189.0	189.0	340

NOTE: * DESIGN TIP ELEVATIONS ARE CONTROLLED BY COMPRESSION.

INDEX TO PLANS

No.	SHEET NAME
1	GENERAL PLAN
2	INDEX TO PLANS
3	FOUNDATION PLAN
4	PILE LAYOUT
5	RETAINING WALL DETAILS
6	LOG OF TEST BORINGS 1 of 1

LEGEND

STRUCTURE EXCAVATION (RETAINING WALL)

STRUCTURE BACKFILL (RETAINING WALL)

STRUCTURE EXCAVATION (TYPE Y-1) (AERIALLY DEPOSITED LEAD)

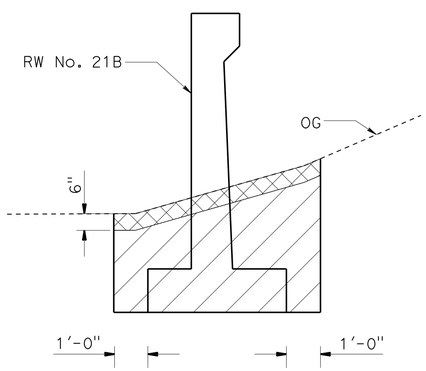

STRUCTURE EXCAVATION

(RETAINING WALL)
NO SCALE

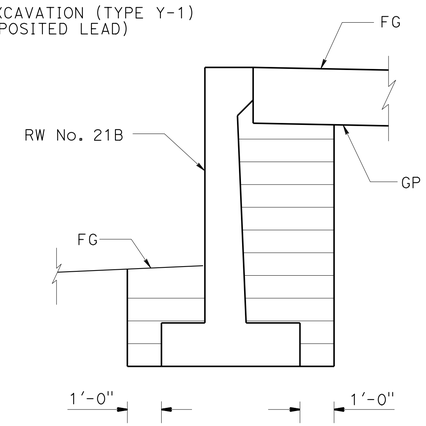

STRUCTURE BACKFILL

(RETAINING WALL)
NO SCALE

STANDARD PLANS DATED 2010

A10A	ACRONYMS AND ABBREVIATIONS (A-L)
A10B	ACRONYMS AND ABBREVIATIONS (M-Z)
A10C	SYMBOLS (SHEET 1 OF 2)
A10D	SYMBOLS (SHEET 2 OF 2)
A10F	LEGEND-SOIL (SHEET 1 OF 2)
A10G	LEGEND-SOIL (SHEET 2 OF 2)
A10H	LEGEND-ROCK
A62B	LIMITS OF PAYMENT FOR EXCAVATION AND BACKFILL - BRIDGE SURCHARGE AND WALL
B0-3	BRIDGE DETAILS
B2-8	PILE DETAILS CLASS 200
RSP B3-5	RETAINING WALL DETAILS NO.1
B11-56	CONCRETE BARRIER TYPE 736

STANDARD PLAN SHEET NO.

DETAIL NO.

NOTE:
THE CONTRACTOR SHALL VERIFY ALL CONTROLLING FIELD DIMENSIONS BEFORE ORDERING OR FABRICATING ANY MATERIAL.

	BY	CHECKED
DESIGN	CHARLES LOMICKA	ARNEL VEGA
DETAILS	HENGAMEH MAHBOOBI	ARNEL VEGA
QUANTITIES	CHARLES LOMICKA	ARNEL VEGA

STATE OF CALIFORNIA
DEPARTMENT OF TRANSPORTATION

DIVISION OF ENGINEERING SERVICES
STRUCTURE DESIGN
DESIGN BRANCH 19

BRIDGE NO. 55E0146
POST MILE 8.41

RETAINING WALL NO. 21B
INDEX TO PLANS

STRUCTURES DESIGN DETAIL SHEET (ENGLISH) (REV. 09-01-10)

ORIGINAL SCALE IN INCHES FOR REDUCED PLANS 0 1 2 3

UNIT: 3621
PROJECT NUMBER & PHASE: 1200000078 - 1 CONTRACT NO.: 12-0C5601

DISREGARD PRINTS BEARING EARLIER REVISION DATES

REVISION DATES: 10-01-12 01-28-13 01-25-13

SHEET 2 OF 6

FILE => 55e-0146-rw21b-a-itp.dgn

USERNAME => s121614 DATE PLOTTED => 24-APR-2013 TIME PLOTTED => 11:48

DIST	COUNTY	ROUTE	POST MILES TOTAL PROJECT	SHEET No.	TOTAL SHEETS
12	Ora	91	8.1/9.3,10.1	308	357

REGISTERED CIVIL ENGINEER 01-25-13 DATE

4-15-13
PLANS APPROVAL DATE

REGISTERED PROFESSIONAL ENGINEER
WEI-KUNG HSIA
No. C50210
Exp. 06-30-13
CIVIL
STATE OF CALIFORNIA

The State of California or its officers or agents shall not be responsible for the accuracy or completeness of electronic copies of this plan sheet.

CURVE DATA				
No.	R	Δ	T	L
1	1945.48	03°46′11"	64.02	128.00
2	261.48	21°54′44"	20.04	40.00
3	1900.00	11°37′22"	193.38	385.43

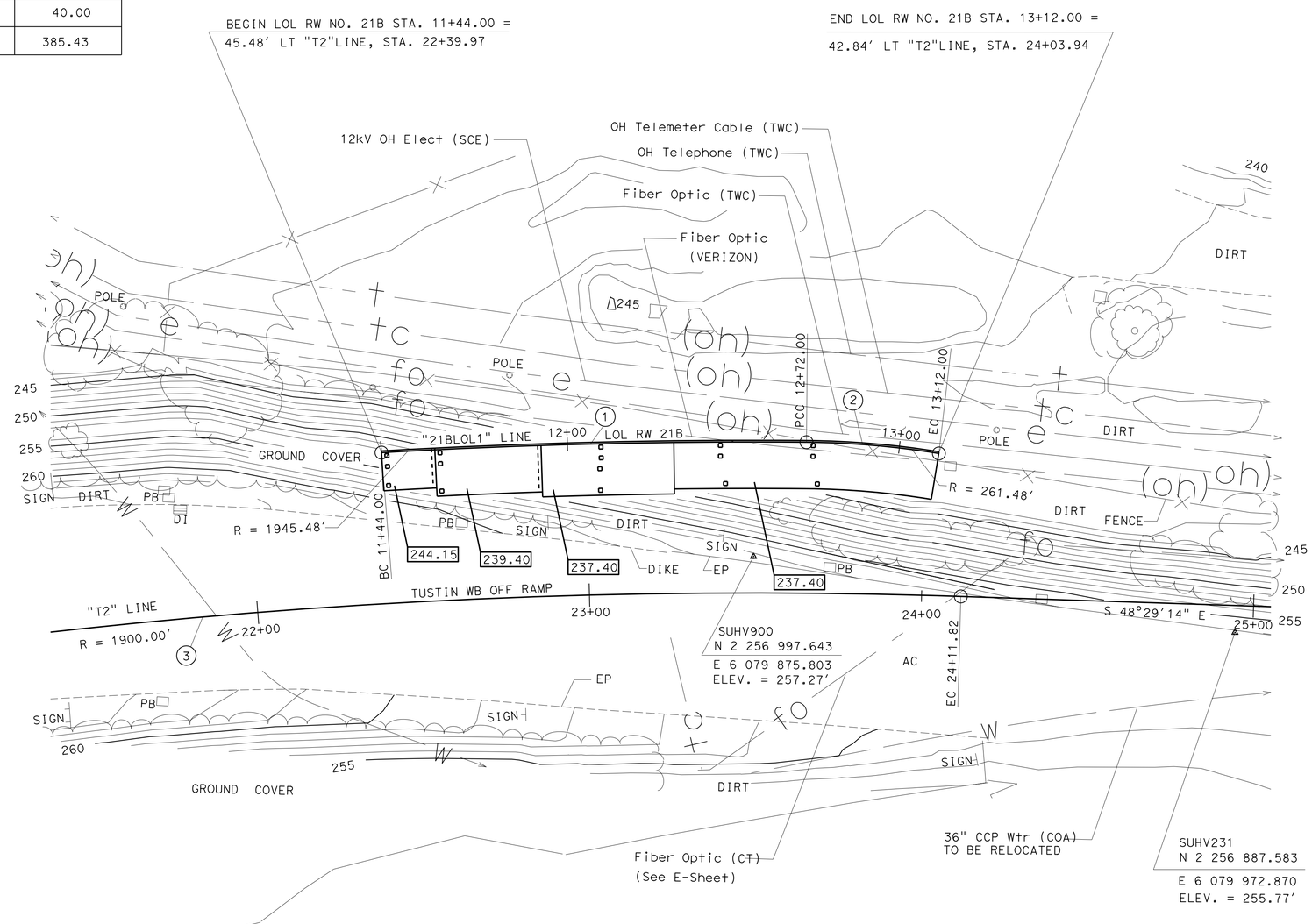

SURVEY CONTROL

SUHV231
PK ON OFF RAMP SHOULDER
8.14 FT Rt. "T2"LINE
Sta.24+94.67
N 2 256 887.583
E 6 079 972.870
ELEV. = 255.77′

SUHV900
PK ON OFF RAMP SHOULDER
10.97 FT Lt. "T2" LINE
Sta. 23+49.39
N 2 256 997.643
E 6 079 875.803
ELEV. = 257.27′

NOTES:

1. UNDERGROUND UTILITIES AS SHOWN ARE APPROXIMATE.
2. ▭ INDICATES BOTTOM OF FOOTING ELEVATION.

PRELIMINARY INVESTIGATION SECTION

SCALE 1"=20′	VERT.DATUM NAVD 88	PHOTOGRAMMETRY AS OF: X		
	HORZ.DATUM NAD 83 (1991.35)	SURVEYED	BY C.STEWART / T.PHUNG	CHECKED BY C. STEWART 09/2012
ALIGNMENT TIES Dist. Traverse Sheet		DRAFTED	BY S. ABASSY 09/2012	CHECKED BY S. ALIVIO 09/2012

DESIGN	BY CHARLES LOMICKA	CHECKED ARNEL VEGA
DETAILS	BY HENGAMEH MAHBOOBI	CHECKED ARNEL VEGA
QUANTITIES	BY CHARLES LOMICKA	CHECKED ARNEL VEGA

STATE OF CALIFORNIA
DEPARTMENT OF TRANSPORTATION

DIVISION OF ENGINEERING SERVICES
STRUCTURE DESIGN
DESIGN BRANCH 19

BRIDGE NO. 55E0146
POST MILE 8.41

RETAINING WALL NO. 21B
FOUNDATION PLAN

STRUCTURES FOUNDATION PLAN SHEET (ENGLISH) (REV. 09-01-10)

ORIGINAL SCALE IN INCHES FOR REDUCED PLANS 0 1 2 3

UNIT: 3647
PROJECT NUMBER & PHASE: 1200000078 - 1 CONTRACT NO.: 0C5601

DISREGARD PRINTS BEARING EARLIER REVISION DATES

REVISION DATES: 10/08/12 01/28/13 01/28/13

SHEET 3 OF 6

FILE => 55e-0146-rw21b-e-fdp1.dgn

DIST	COUNTY	ROUTE	POST MILES TOTAL PROJECT	SHEET No.	TOTAL SHEETS
12	Ora	91	8.1/9.3,10.1	309	357

REGISTERED CIVIL ENGINEER 01-25-13 DATE

4-15-13
PLANS APPROVAL DATE

REGISTERED PROFESSIONAL ENGINEER WEI-KUNG HSIA No. C50210 Exp. 06-30-13 CIVIL STATE OF CALIFORNIA

The State of California or its officers or agents shall not be responsible for the accuracy or completeness of electronic copies of this plan sheet.

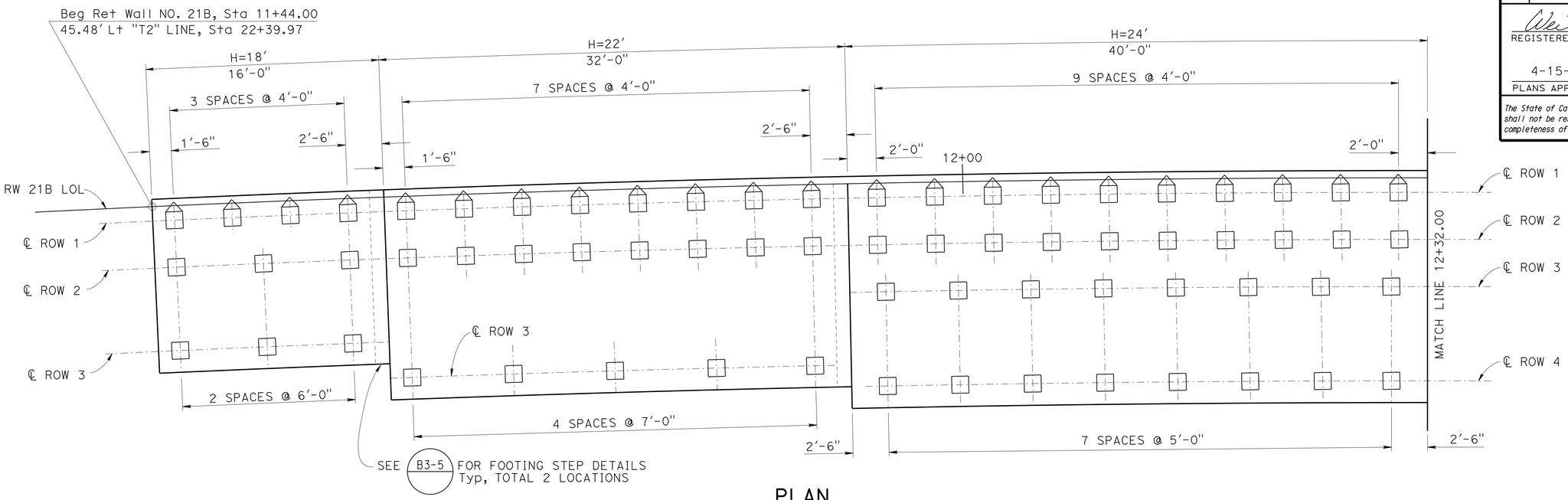

PLAN
1/4" = 1'-0"

LEGEND:

- INDICATES 1:4 BATTERED PILE
- INDICATES PLUMB PILE

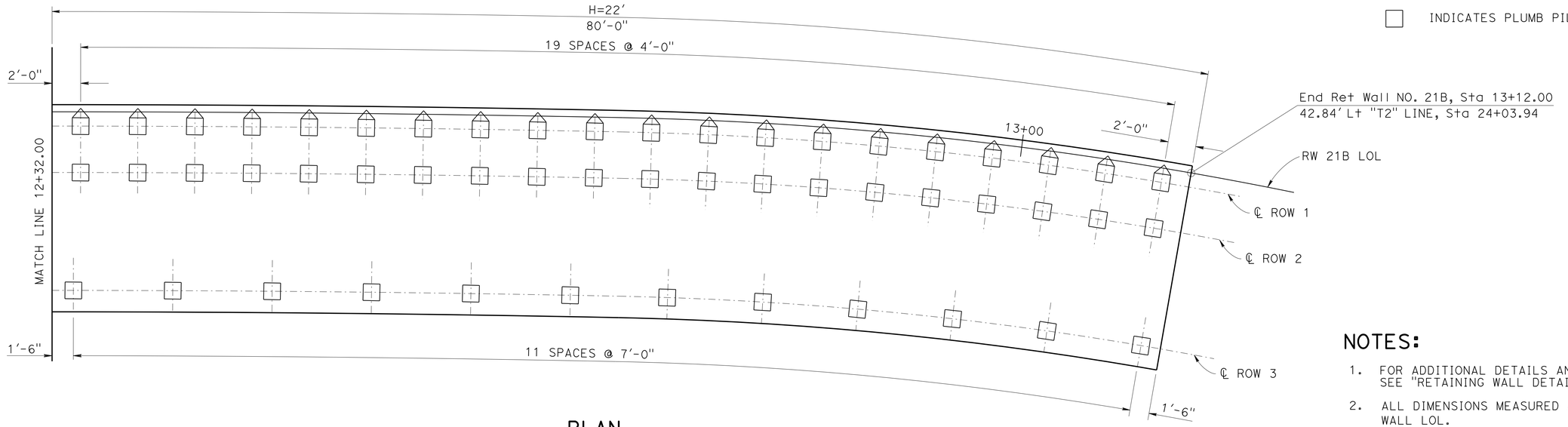

PLAN
1/4" = 1'-0"

NOTES:

1. FOR ADDITIONAL DETAILS AND DIMENSIONS, SEE "RETAINING WALL DETAILS" SHEET.
2. ALL DIMENSIONS MEASURED ALONG RETAINING WALL LOL.
3. ALL PILES ARE CLASS 200. FOR PILE DATA TABLE, SEE "INDEX TO PLANS" SHEET.

NOTE:
THE CONTRACTOR SHALL VERIFY ALL CONTROLLING FIELD DIMENSIONS BEFORE ORDERING OR FABRICATING ANY MATERIAL.

	BY	CHECKED
DESIGN	CHARLES LOMICKA	ARNEL VEGA
DETAILS	HENGAMEH MAHBOOBI	ARNEL VEGA
QUANTITIES	CHARLES LOMICKA	ARNEL VEGA

STATE OF CALIFORNIA
DEPARTMENT OF TRANSPORTATION

DIVISION OF ENGINEERING SERVICES
STRUCTURE DESIGN
DESIGN BRANCH 19

BRIDGE NO. 55E0146
POST MILE 8.41

RETAINING WALL NO. 21B
PILE LAYOUT

STRUCTURES DESIGN DETAIL SHEET (ENGLISH) (REV. 09-01-10)

ORIGINAL SCALE IN INCHES FOR REDUCED PLANS 0 1 2 3

UNIT: 3621
PROJECT NUMBER & PHASE: 1200000078 - 1 CONTRACT NO.: 12-0C5601

DISREGARD PRINTS BEARING EARLIER REVISION DATES

REVISION DATES: 10/22/12 01/28/13 01/23/13

SHEET 4 OF 6

FILE => 55e-0146-rw21b-k-tpdet_01.dgn

USERNAME => s121614 DATE PLOTTED => 24-APR-2013 TIME PLOTTED => 11:48

DIST	COUNTY	ROUTE	POST MILES TOTAL PROJECT	SHEET No.	TOTAL SHEETS
12	Ora	91	8.1/9.3,10.1	310	357

REGISTERED CIVIL ENGINEER 01-25-13 DATE

4-15-13
PLANS APPROVAL DATE

REGISTERED PROFESSIONAL ENGINEER WEI-KUNG HSIA No. C50210 Exp. 06-30-13 CIVIL STATE OF CALIFORNIA

The State of California or its officers or agents shall not be responsible for the accuracy or completeness of electronic copies of this plan sheet.

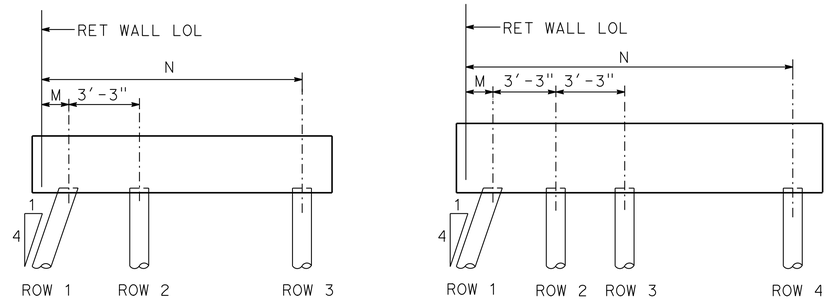

2

H = 18' THROUGH 22'

H = 24'

PILE PATTERN

No scale

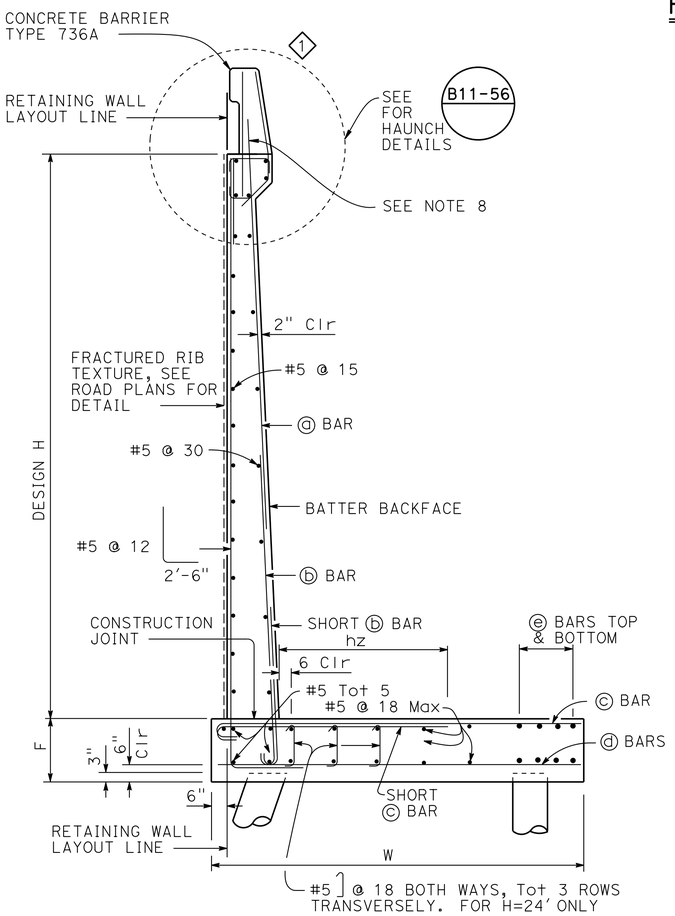

PILE FOOTING SECTION

No scale
All piles are not shown

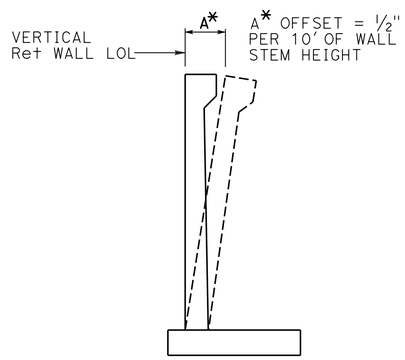

WALL OFFSET

No scale

Values for offsetting forms to be determined by the engineer

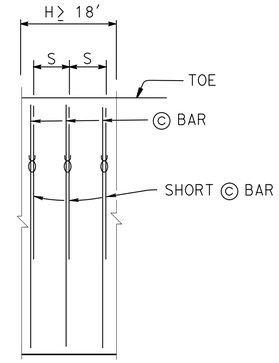

PLAN

NO SCALE

4

NOTES:

Only ⓒ bars shown
"S" is ⓒ bar spacing, see table
ȣ indicates 2 bar bundle.

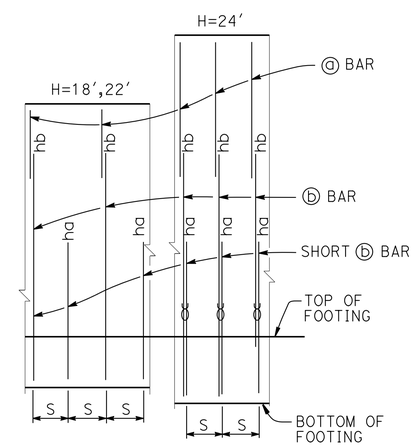

ELEVATION

No scale

3

NOTES:

"ha" and "hb" above ⓑ bars indicate distance from top of footing to upper end of ⓑ bars, see table.
"S" is ⓑ bar spacing, see table.
ȣ indicates 2 bar bundle.

NOTES: 5

1. All piles are class 200 concrete piles.
2. Pile batter shown are 1:4.
3. Minimum distance between center pile and edge of footing is 1'-6".
4. Lateral resistance of each pile:
   30 kip for strength limit states.
   40 kip for extreme limit states.
5. For details not shown and drainage notes, see B3-5
6. Footing cover, 2'-0" minimum.
7. For barrier reinforcement, see B11-56
8. Extend ⓐ bars 10" into barrier.

6

TABLE OF REINFORCING STEEL AND DIMENSION DATA

DESIGN H	18'	22'	24'
W	12'-0"	14'-6"	16'-0"
F PILE FOOTING	2'-0"	2'-9"	2'-9"
M	1'-0"	1'-0"	1'-0"
N	10'-0"	12'-6"	14'-0"
STEM BATTER	1/2:12	1/2:12	5/8:12
ⓐ BARS	#7@12	#8@12	#6@6
ⓑ BARS	#9@6	#10@6	#8@6 ȣ
ha	6'-0"	7'-0"	7'-6"
hb	12'-0"	16'-0"	15'-6"
ⓒ BARS	#8@6 ȣ	#9@6 ȣ	#10@6 ȣ
hz	4'-9"	6'-3"	7'-6"
ⓓ BARS	#5@12	#6@12	#5@12
ⓔ BARS	8-#5@12	#5@18	#5@18

NOTES:

1. ȣ indicates 2 bar bundle.
2. Total ⓔ bars are top and bottom combined.

REVISED STANDARD DRAWING

FILE NO. xs14-370-1

APPROVAL DATE July 2011

1 REVISED DETAIL
2 DELETED DETAIL
3 MODIFIED ELEVATION
4 MODIFIED PLAN
5 REVISED NOTES
6 REVISED TABLE

STATE OF CALIFORNIA
DEPARTMENT OF TRANSPORTATION

DIVISION OF ENGINEERING SERVICES

BRIDGE NO. 55E0146
POST MILE 8.41

RETAINING WALL NO. 21B
RETAINING WALL DETAILS

DS OSD 2147A (ENGLISH STANDARD DRAWING "XS" BORDER REV. (02-02-11)

ORIGINAL SCALE IN INCHES FOR REDUCED PLANS 0 1 2 3

UNIT: 3621
PROJECT NUMBER & PHASE: 1200000078 - 1 CONTRACT NO.: 0C5601

DISREGARD PRINTS BEARING EARLIER REVISION DATES

REVISION DATES 10-01-12 01-25-13 01-28-13

SHEET 5 OF 6

FILE => 55e-0146-rw21b-u-miscdt01.dgn

USERNAME => s121614 DATE PLOTTED => 24-APR-2013 TIME PLOTTED => 11:48

DIST	COUNTY	ROUTE	POST MILES TOTAL PROJECT	SHEET No.	TOTAL SHEETS
12	Ora	91	8.1/9.3,10.1	311	357

Quanyan Liao 12-5-12
REGISTERED CIVIL ENGINEER DATE

4-15-13
PLANS APPROVAL DATE

REGISTERED PROFESSIONAL ENGINEER Quanyan Liao No. C68870 Exp. 9-30-13 CIVIL STATE OF CALIFORNIA

The State of California or its officers or agents shall not be responsible for the accuracy or completeness of electronic copies of this plan sheet.

This LOTB sheet was prepared in accordance with the Caltrans Soil & Rock Logging, Classification, & Presentation Manual (2010 Edition).

See 2010 Standard Plans A10F and A10G for Soil Legend, and A10H for Rock Legend.

BENCH MARK

Described by OCS 2002-Found 3¾" OCS Aluminum benchmark disk stamped "1L-64-82", set in the top of a 6"by 6" concrete post. Monument is located along the southerly side of the Santa Ana River, 0.25 miles northerly along the southerly Levee from the centerline of Tustin Avenue, 17.8′ southerly of the centerline of the bike trail and 1.5′ northerly from an OCS steel witness post. Monument is set level with the sidewalk.
Elev: 252.454′ (NAVD 88)
OCS control Index map: Q07-02
City/location: Anaheim

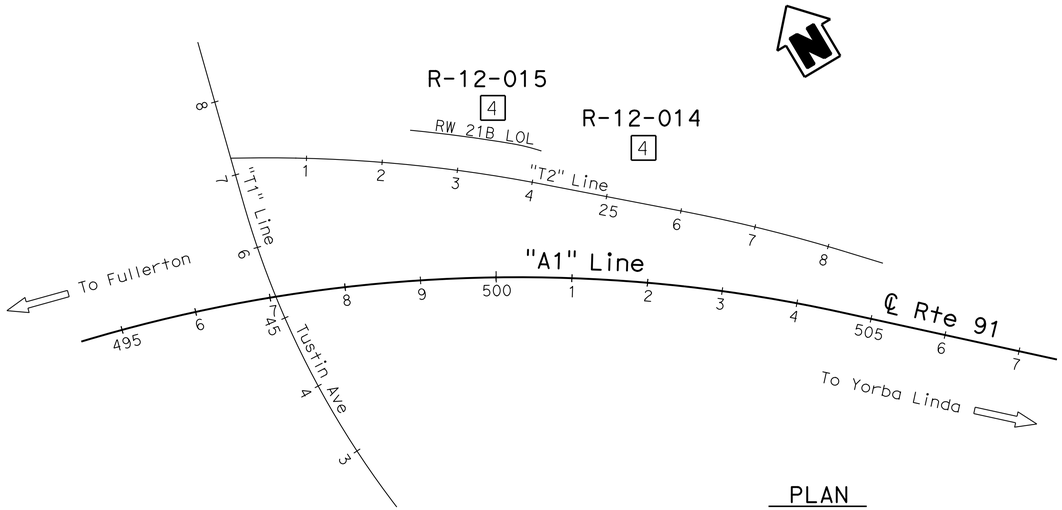

PLAN
1" = 100′

Note: Ground water encountered but not measured during field investigation.

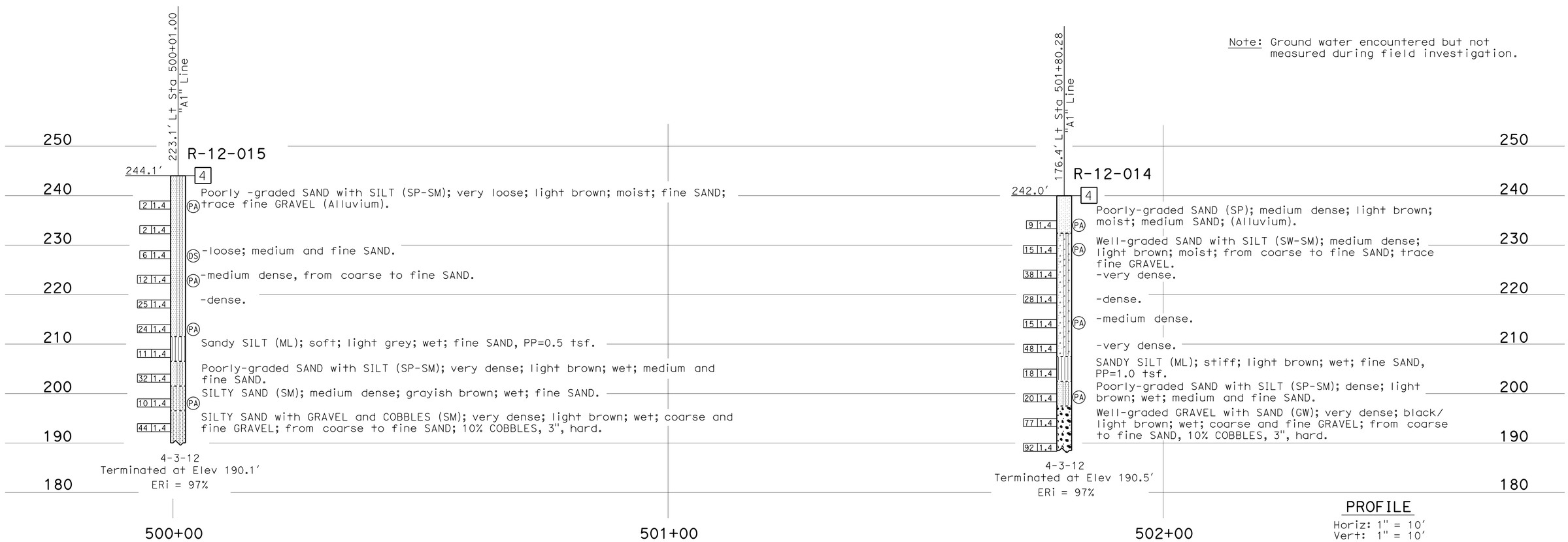

PROFILE
Horiz: 1" = 10′
Vert: 1" = 10′

ENGINEERING SERVICES	MATERIALS AND GEOTECHNICAL SERVICES	STATE OF CALIFORNIA DEPARTMENT OF TRANSPORTATION	DIVISION OF ENGINEERING SERVICES STRUCTURE DESIGN DESIGN BRANCH 19	BRIDGE NO. 55E0146 POST MILE 8.41	RETAINING WALL NO. 21B LOG OF TEST BORINGS
FUNCTIONAL SUPERVISOR NAME: S. Karim	DRAWN BY: W, Tang 10/12 CHECKED BY: A. Mehrazar	FIELD INVESTIGATION BY: T. Chu			

OGS CIVIL LOG OF TEST BORINGS SHEET

ORIGINAL SCALE IN INCHES FOR REDUCED PLANS 0 1 2 3

UNIT: 3643
PROJECT NUMBER & PHASE: 1200000078 - 1 CONTRACT NO.: 12-0C5601

DISREGARD PRINTS BEARING EARLIER REVISION DATES

REVISION DATES: 11-26-12 12-04-12 12-05-12

SHEET 6 OF 6

FILE => 55e-0146-rw21b-z-l1tb01.dgn

USERNAME => s12614 DATE PLOTTED => 24-APR-2013 TIME PLOTTED => 11:49

DIST	COUNTY	ROUTE	POST MILES TOTAL PROJECT	SHEET No.	TOTAL SHEETS
12	Ora	91	8.1/9.3,10.1	312	357

REGISTERED CIVIL ENGINEER 01-25-13 DATE

4-15-13
PLANS APPROVAL DATE

REGISTERED PROFESSIONAL ENGINEER WEI-KUNG HSIA No. C50210 Exp. 06-30-13 CIVIL STATE OF CALIFORNIA

The State of California or its officers or agents shall not be responsible for the accuracy or completeness of electronic copies of this plan sheet.

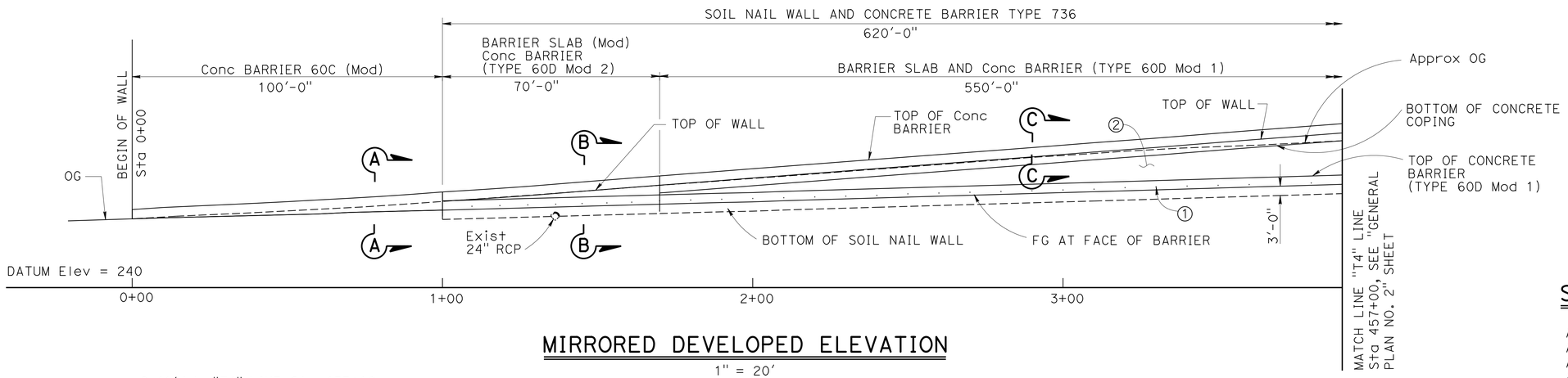

MIRRORED DEVELOPED ELEVATION

1" = 20'

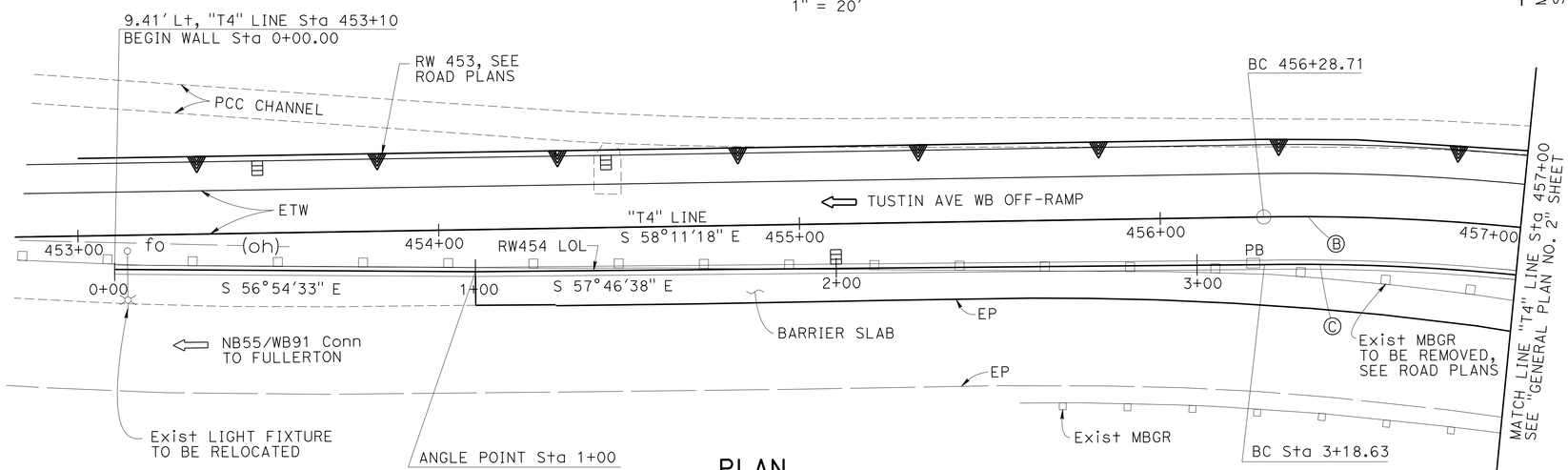

PLAN

1" = 20'

STANDARD PLANS DATED 2010

	A10A	ABBREVIATIONS (SHEET 1 OF 2)
	A10B	ABBREVIATIONS (SHEET 2 OF 2)
	A10C	LINES AND SYMBOLS (SHEET 1 OF 3)
	A10D	LINES AND SYMBOLS (SHEET 2 OF 3)
	A10E	LINES AND SYMBOLS (SHEET 3 OF 3)
	A10F	LEGEND-SOIL (SHEET 1 OF 2)
	A10G	LEGEND-SOIL (SHEET 2 OF 2)
	A10H	LEGEND-ROCK
	A76A	CONCRETE BARRIER TYPE 60
	B0-3	BRIDGE DETAILS
	B3-6	RETAINING WALL DETAIL NO.2
RSP	B11-47	CABLE RAILING
	B11-56	CONCRETE BARRIER TYPE 736
RSP	P18	CONCRETE PAVEMENT - LANE SCHEMATICS AND ISOLATION JOINT DETAIL

QUANTITIES

STRUCTURE EXCAVATION (RETAINING WALL)	63	CY
STRUCTURE EXCAVATION (SOIL NAIL WALL)	764	CY
STRUCTURE EXCAVATION (TYPE Y-1) (AERIALLY DEPOSITED LEAD)	27	CY
STRUCTURE BACKFILL (RETAINING WALL)	3	CY
STRUCTURE BACKFILL (SOIL NAIL WALL)	91	CY
SOIL NAIL	13,410	LF
60" CAST-IN-DRILLED-HOLE CONCRETE PILING	328	LF
STRUCTURAL CONCRETE, RETAINING WALL	302	CY
STRUCTURAL CONCRETE, BARRIER SLAB	565	CY
CONCRETE SURFACE TEXTURE	7,800	SQFT
DRILL AND BOND DOWEL	265	LF
BAR REINFORCING STEEL (BRIDGE)	30,496	LB
BAR REINFORCING STEEL (RETAINING WALL)	62,724	LB
STRUCTURAL SHOTCRETE	162	CY
MINOR CONCRETE (GUTTER) (CY)	2	CY
CABLE RAILING	65	LF
CONCRETE BARRIER (TYPE 60C MODIFIED)	100	LF
CONCRETE BARRIER (TYPE 60D MODIFIED 1)	600	LF
CONCRETE BARRIER (TYPE 60D MODIFIED 2)	80	LF
CONCRETE BARRIER (TYPE 736)	620	LF

NOTES

1. FOR GENERAL NOTES, SEE "CONCRETE BARRIER TYPE 60C(Mod)" SHEET.
2. FOR INDEX TO PLANS, SEE "GENERAL PLAN NO. 2" SHEET.
3. FOR SECTION A-A, SEE "CONCRETE BARRIER TYPE 60C (MOD)" SHEET.
4. FOR SECTIONS B-B AND C-C, SEE "CONCRETE BARRIER SLAB DETAILS" SHEET.

① WEEPHOLE BETWEEN SOIL NAILS, SEE "MISCELLANEOUS DETAILS" SHEET.

② CONCRETE SURFACE TEXTURE, SEE "CONCRETE SURFACE TEXTURE" SHEETS.

CURVE DATA				
No.	R	Δ	T	L
Ⓑ	625.00	22°58'58"	127.06	250.70
Ⓒ	611.79	22°58'57"	124.37	245.40

NOTE:
THE CONTRACTOR SHALL VERIFY ALL CONTROLLING FIELD DIMENSIONS BEFORE ORDERING OR FABRICATING ANY MATERIAL.

BARTT GUNTER
DESIGN ENGINEER

	BY	CHECKED
DESIGN	WEI-KUNG HSIA	RUI WANG
DETAILS	H. MAHBOOBI / H. INIGUEZ	RUI WANG
QUANTITIES	DARYOUSH BALBAS	A. VEGA / C. LOMICKA

LOAD & RESISTANCE FACTOR DESIGN — LIVE LOADING: HL93 W/"LOW-BOY": PERMIT DESIGN VEHICLE

	BY	CHECKED
LAYOUT	WEI-KUNG HSIA	RUI WANG
SPECIFICATIONS	THERESA NEDWICK	THERESA NEDWICK (PLANS AND SPECS COMPARED)

ORIGINAL SCALE IN INCHES FOR REDUCED PLANS 0 1 2 3

STATE OF CALIFORNIA
DEPARTMENT OF TRANSPORTATION

DIVISION OF ENGINEERING SERVICES
STRUCTURE DESIGN
DESIGN BRANCH 19

BRIDGE NO. 55E0147
POST MILE 8.9

RETAINING WALL NO. 454
GENERAL PLAN NO. 1

UNIT: 3621
PROJECT NUMBER & PHASE: 1200000078 - 1 CONTRACT NO.: 12-0C5601

DISREGARD PRINTS BEARING EARLIER REVISION DATES

REVISION DATES: 03-26-12 01-25-13 01-30-13

SHEET 1 OF 29

USERNAME => s121614 DATE PLOTTED => 24-APR-2013 TIME PLOTTED => 11:49

DIST	COUNTY	ROUTE	POST MILES TOTAL PROJECT	SHEET No.	TOTAL SHEETS
12	Ora	91	8.1/9.3,10.1	313	357

REGISTERED CIVIL ENGINEER 01-25-13 DATE

4-15-13
PLANS APPROVAL DATE

REGISTERED PROFESSIONAL ENGINEER WEI-KUNG HSIA No. C50210 Exp. 06-30-13 CIVIL STATE OF CALIFORNIA

The State of California or its officers or agents shall not be responsible for the accuracy or completeness of electronic copies of this plan sheet.

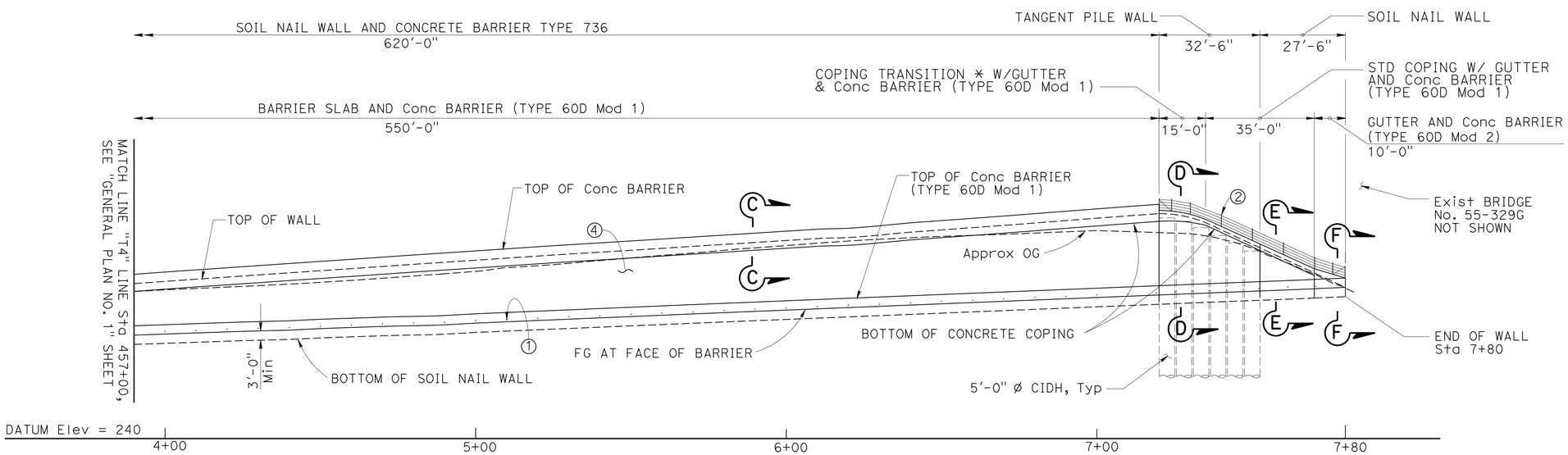

MIRRORED DEVELOPED ELEVATION

1" = 20'

✳ = PROVIDE PARABOLIC CURVES AT TOP AND BOTTOM OF COPING TRANSITION.

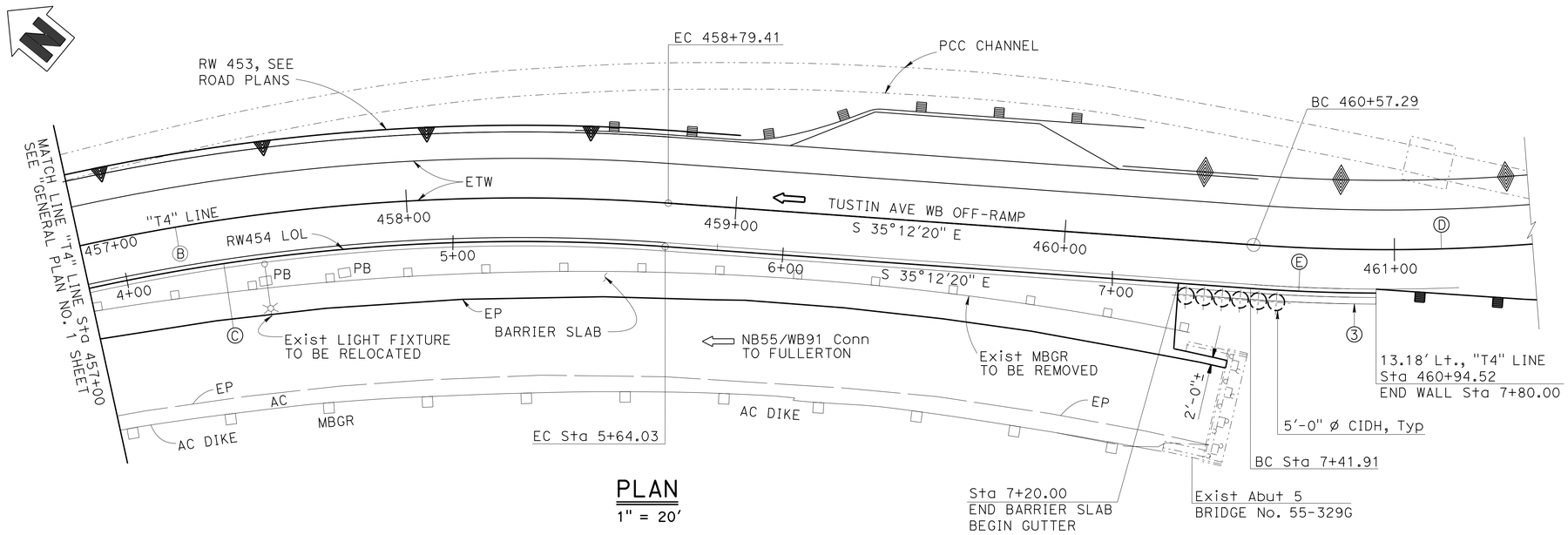

PLAN

1" = 20'

NOTE:
THE CONTRACTOR SHALL VERIFY ALL CONTROLLING FIELD DIMENSIONS BEFORE ORDERING OR FABRICATING ANY MATERIAL.

INDEX TO PLANS

NO.	SHEET NAME
1	GENERAL PLAN 1 OF 2
2	GENERAL PLAN 2 OF 2
3	FOUNDATION PLAN NO.1
4	FOUNDATION PLAN NO.2
5	SOIL NAIL ELEVATION NO. 1
6	SOIL NAIL ELEVATION NO. 2
7	SOIL NAIL ELEVATION NO. 3
8	CONCRETE BARRIER TYPE 60C (MOD)
9	CONCRETE BARRIER SLAB DETAILS
10	COPING DETAILS
11	SOIL NAIL WALL DETAILS
12	SOIL NAIL ASSEMBLY
13	TANGENT PILE WALL DETAILS NO. 1
14	TANGENT PILE WALL DETAILS NO. 2
15	MISCELLANEOUS DETAILS
16	CONCRETE SURFACE TEXTURE NO. 1
17	CONCRETE SURFACE TEXTURE NO. 2
18	CONCRETE SURFACE TEXTURE NO. 3
19	CONCRETE SURFACE TEXTURE NO. 4
20	CONCRETE SURFACE TEXTURE NO. 5
21	CONCRETE SURFACE TEXTURE NO. 6
22	CONCRETE SURFACE TEXTURE NO. 7
23	CONCRETE SURFACE TEXTURE NO. 8
24	CONCRETE SURFACE TEXTURE NO. 9
25	CONCRETE SURFACE TEXTURE NO. 10
26	CONCRETE SURFACE TEXTURE NO. 11
27	CONCRETE SURFACE TEXTURE NO. 12
28	LOG OF TEST BORINGS 1 OF 2
29	LOG OF TEST BORINGS 2 OF 2

NOTES:

1. FOR SECTION C-C, SEE "CONCRETE BARRIER SLAB DETAILS" SHEET.
2. FOR SECTIONS D-D, E-E, AND F-F, SEE "COPING DETAILS" SHEET.

① WEEPHOLE BETWEEN SOIL NAIL AND CIDH PILES, SEE "MISCELLANEOUS DETAILS" SHEET.

② CABLE RAILING B11-47 RSP

③ Gutter B3-6

④ CONCRETE SURFACE TEXTURE, SEE "CONCRETE SURFACE TEXTURE" SHEETS.

CURVE DATA				
No.	R	Δ	T	L
Ⓑ	625.00	22°58'58"	127.06	250.70
Ⓒ	611.79	22°58'57"	124.37	245.40
Ⓓ	570.00	41°12'16"	214.27	409.92
Ⓔ	568.77	03°50'13"	19.05	38.09

BARTT GUNTER
DESIGN ENGINEER

	BY	CHECKED
DESIGN	WEI-KUNG HSIA	RUI WANG
DETAILS	H. MAHBOOBI / H. INIGUEZ	RUI WANG
QUANTITIES	DARYOUSH BALBAS	A. VEGA / C. LOMICKA

LOAD & RESISTANCE FACTOR DESIGN — LIVE LOADING: HL93 W/"LOW-BOY"; PERMIT DESIGN VEHICLE

	BY	CHECKED
LAYOUT	WEI-KUNG HSIA	RUI WANG
SPECIFICATIONS	THERESA NEDWICK	THERESA NEDWICK

PLANS AND SPECS COMPARED

ORIGINAL SCALE IN INCHES FOR REDUCED PLANS 0 1 2 3

STATE OF CALIFORNIA
DEPARTMENT OF TRANSPORTATION

DIVISION OF ENGINEERING SERVICES
STRUCTURE DESIGN
DESIGN BRANCH 19

BRIDGE NO. 55E0147
POST MILE 8.9

RETAINING WALL NO. 454
GENERAL PLAN NO. 2

UNIT: 3621
PROJECT NUMBER & PHASE: 1200000078 - 1 CONTRACT NO.: 12-0C5601

DISREGARD PRINTS BEARING EARLIER REVISION DATES

REVISION DATES: 01-26-12 01-30-13 01-28-13

SHEET 2 OF 29

USERNAME => s12161d DATE PLOTTED => 24-APR-2013 TIME PLOTTED => 11:49

STRUCTURES DESIGN GENERAL PLAN SHEET (ENGLISH) (REV.09-01-10)

FILE => 55e-0147-rw454-a-gp_02.dgn

DIST	COUNTY	ROUTE	POST MILES TOTAL PROJECT	SHEET No.	TOTAL SHEETS
12	Ora	91	8.1/9.3,10.1	314	357

REGISTERED CIVIL ENGINEER 01-25-13 DATE

4-15-13
PLANS APPROVAL DATE

REGISTERED PROFESSIONAL ENGINEER
WEI-KUNG HSIA
No. C50210
Exp. 06-30-13
CIVIL
STATE OF CALIFORNIA

The State of California or its officers or agents shall not be responsible for the accuracy or completeness of electronic copies of this plan sheet.

CURVE DATA				
No.	R	Δ	T	L
A	1500.00	09°25'19"	123.61	246.67
B	625.00	22°58'58"	127.06	250.70
C	611.79	22°58'57"	124.37	245.40

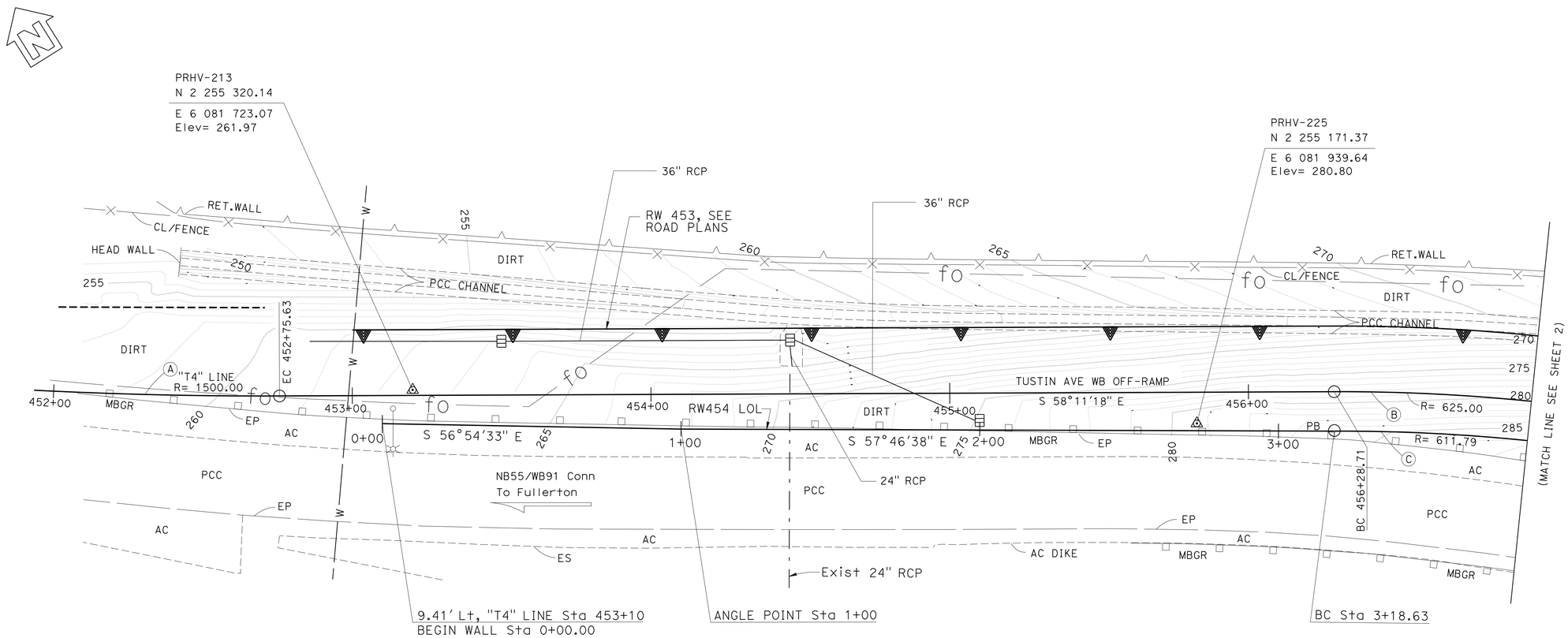

SURVEY CONTROL

PRHV-213

Fnd SPK./DIRT
1.82 Lt of "T4" LINE
Sta 453+20.23
N 2 255 320.14
E 6 081 723.07
Elev= 261.97

PRHV-225

Fnd SPK./DIRT
10.44 Rt of "T4" LINE
Sta 455+82.69
N 2 255 171.37
E 6 081 939.64
Elev= 280.80

NOTES:

UNDERGROUND UTILITIES AS SHOWN ARE APPROXIMATE

PRELIMINARY INVESTIGATION SECTION

SCALE 1"=20'	VERT.DATUM NAVD88	PHOTOGRAMMETRY AS OF: X		
	HORZ.DATUM NAD83 (1991.35)	SURVEYED	BY DISTRICT 12	CHECKED BY T.PHUNG 01/2012
ALIGNMENT TIES Dist. Traverse Sheet		DRAFTED	BY V.PHAM 01/2012	CHECKED BY S.ALIVIO 01/2012

DESIGN	BY WEI-KUNG HSIA	CHECKED RUI WANG
DETAILS	BY HECTOR INIGUEZ	CHECKED RUI WANG
QUANTITIES	BY DARYOUSH BALBAS	CHECKED A. VEGA / C. LOMICKA

STATE OF CALIFORNIA
DEPARTMENT OF TRANSPORTATION

DIVISION OF ENGINEERING SERVICES
STRUCTURE DESIGN
DESIGN BRANCH 19

BRIDGE NO. 55E0147
POST MILE 8.9

RETAINING WALL NO. 454
FOUNDATION PLAN NO. 1

STRUCTURES FOUNDATION PLAN SHEET (ENGLISH) (REV. 09-01-10)

ORIGINAL SCALE IN INCHES FOR REDUCED PLANS 0 1 2 3

UNIT: 3647
PROJECT NUMBER & PHASE: 1200000078 - 1 CONTRACT NO.: 12-0C5601

DISREGARD PRINTS BEARING EARLIER REVISION DATES

REVISION DATES 01/26/12 01/27/13 01/28/13

SHEET 3 OF 29

FILE => 55e-0147-rw454-e-fdpl_01.dgn

DIST	COUNTY	ROUTE	POST MILES TOTAL PROJECT	SHEET No.	TOTAL SHEETS
12	Ora	91	8.1/9.3,10.1	315	357

REGISTERED CIVIL ENGINEER 01-25-13 DATE

4-15-13
PLANS APPROVAL DATE

REGISTERED PROFESSIONAL ENGINEER
WEI-KUNG HSIA
No. C50210
Exp. 06-30-13
CIVIL
STATE OF CALIFORNIA

The State of California or its officers or agents shall not be responsible for the accuracy or completeness of electronic copies of this plan sheet.

CURVE DATA				
No.	R	Δ	T	L
(B)	625.00	22°58′58"	127.06	250.70
(C)	611.79	22°58′57"	124.37	245.40
(D)	570.00	41°12′16"	214.27	409.92
(E)	568.77	03°50′13"	19.05	38.09

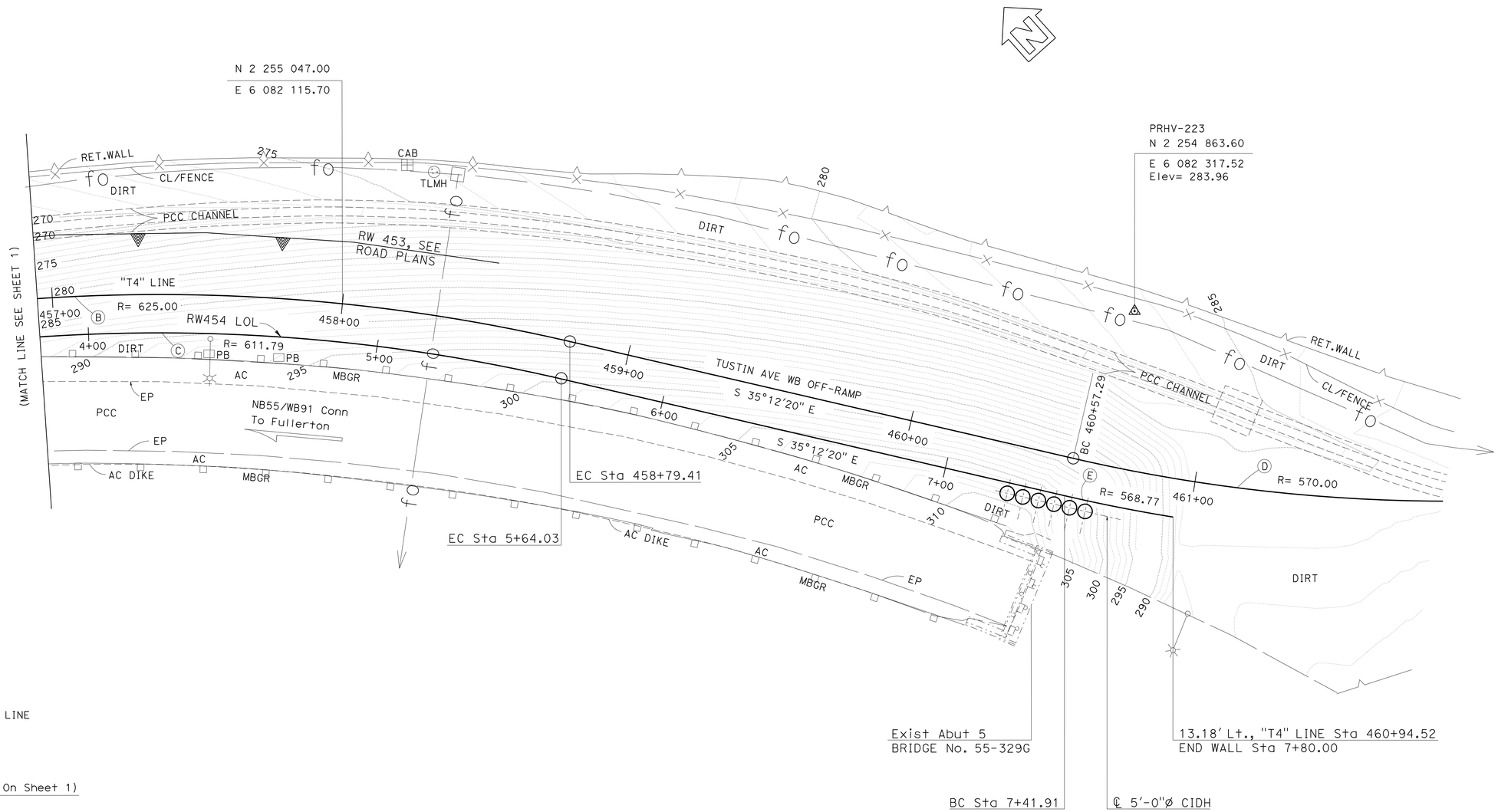

SURVEY CONTROL

PRHV-223

Fnd SPK./DIRT
54.06 Lt of "T4" LINE
Sta 460+67.38
N 2 254 863.60
E 6 082 317.52
Elev= 283.96

PRHV-225 (Shown On Sheet 1)

Fnd SPK./DIRT
10.44 Rt of "T4" LINE
Sta 455+82.69
N 2 255 171.37
E 6 081 939.64
Elev= 280.80

NOTES:

UNDERGROUND UTILITIES AS SHOWN ARE APPROXIMATE

PRELIMINARY INVESTIGATION SECTION

SCALE	VERT.DATUM NAVD88	PHOTOGRAMMETRY AS OF: X			
1"=20′	HORZ.DATUM NAD83 (1991.35)	SURVEYED	BY DISTRICT 12	CHECKED	BY T.PHUNG 01/2012
ALIGNMENT TIES Dist. Traverse Sheet		DRAFTED	BY V.PHAM 01/2012	CHECKED	BY S.ALIVIO 01/2012

DESIGN	BY WEI-KUNG HSIA	CHECKED RUI WANG
DETAILS	BY HECTOR INIGUEZ	CHECKED RUI WANG
QUANTITIES	BY DARYOUSH BALBAS	CHECKED A. VEGA / C. LOMICKA

STATE OF CALIFORNIA
DEPARTMENT OF TRANSPORTATION

DIVISION OF ENGINEERING SERVICES
STRUCTURE DESIGN
DESIGN BRANCH 19

BRIDGE NO. 55E0147
POST MILE 8.9

RETAINING WALL NO. 454
FOUNDATION PLAN NO. 2

STRUCTURES FOUNDATION PLAN SHEET (ENGLISH) (REV. 09-01-10)

ORIGINAL SCALE IN INCHES FOR REDUCED PLANS 0 1 2 3

UNIT: 3647
PROJECT NUMBER & PHASE: 1200000078 - 1 CONTRACT NO.: 12-0C5601

DISREGARD PRINTS BEARING EARLIER REVISION DATES → REVISION DATES 01/26/12 01/22/13 01/28/13

SHEET 4 OF 29

FILE => 55e-0147-rw454-e-fdpl_02.dgn

DIST	COUNTY	ROUTE	POST MILES TOTAL PROJECT	SHEET No.	TOTAL SHEETS
12	Ora	91	8.1/9.3,10.1	316	357

REGISTERED CIVIL ENGINEER 01-25-13 DATE

4-15-13
PLANS APPROVAL DATE

REGISTERED PROFESSIONAL ENGINEER WEI-KUNG HSIA No. C50210 Exp. 06-30-13 CIVIL STATE OF CALIFORNIA

The State of California or its officers or agents shall not be responsible for the accuracy or completeness of electronic copies of this plan sheet.

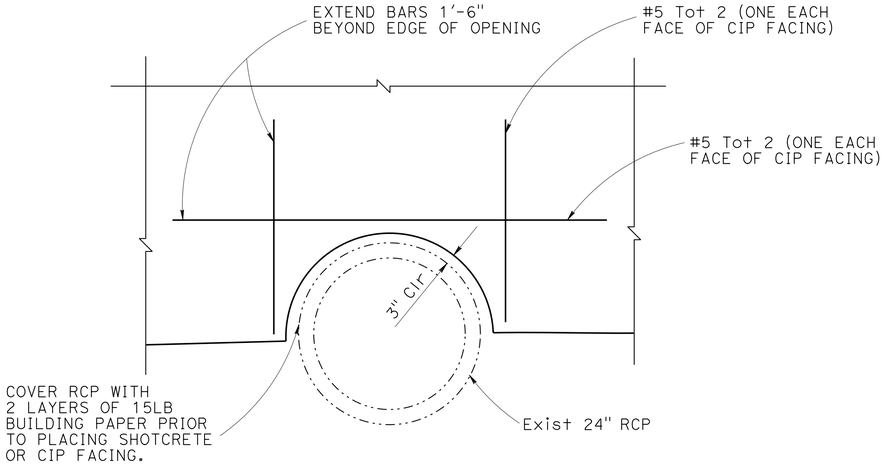

DETAIL A

NO SCALE

LEGEND:

- ⊡ SOIL NAIL
- ⊠ PROOF TEST NAIL OR AS DIRECTED BY THE ENGINEER.

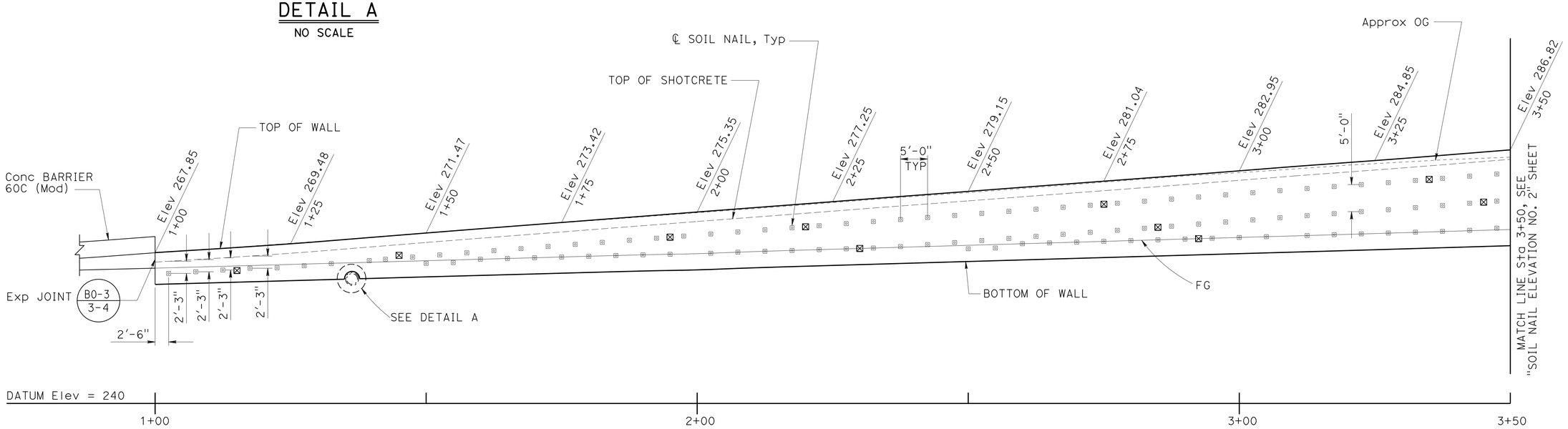

MIRRORED DEVELOPED ELEVATION

1" = 10'

NOTES:

1. CONCRETE BARRIER NOT SHOWN FOR CLARITY.
2. SEE ROAD PLANS FOR FG AT FACE OF BARRIER. BOTTOM OF WALL IS 3'-0" BELOW FG AT FACE OF BARRIER.
3. BOTTOM ROW OF SOIL NAILS SHALL BE NO MORE THAN 3'-6" AND NO LESS THAN 2'-6" FROM BOTTOM OF WALL, UNLESS OTHERWISE SHOWN.
4. VERTICAL DISTANCE FROM TOP OF SHOTCRETE TO TOP ROW OF SOIL NAILS SHALL BE 2'-6", UNLESS OTHERWISE SHOWN.

NOTE:
THE CONTRACTOR SHALL VERIFY ALL CONTROLLING FIELD DIMENSIONS BEFORE ORDERING OR FABRICATING ANY MATERIAL.

	BY	CHECKED
DESIGN	CHARLES LOMICKA	ARNEL VEGA
DETAILS	HENGAMEH MAHBOOBI	ARNEL VEGA
QUANTITIES	DARYOUSH BALBAS	A. VEGA / C. LOMICKA

STATE OF CALIFORNIA DEPARTMENT OF TRANSPORTATION

DIVISION OF ENGINEERING SERVICES STRUCTURE DESIGN DESIGN BRANCH 19

BRIDGE NO. 55E0147
POST MILE 8.9

RETAINING WALL NO. 454
SOIL NAIL ELEVATION NO. 1

STRUCTURES DESIGN DETAIL SHEET (ENGLISH) (REV. 09-01-10)

ORIGINAL SCALE IN INCHES FOR REDUCED PLANS 0 1 2 3

UNIT: 3621
PROJECT NUMBER & PHASE: 1200000078 - 1 CONTRACT NO.: 12-0C5601

DISREGARD PRINTS BEARING EARLIER REVISION DATES

REVISION DATES 05-24-12 01-29-13 01-28-13 SHEET 5 OF 29

FILE => 55e-0147-rw454-f-c-delev_01.dgn

USERNAME => 6121614 DATE PLOTTED => 24-APR-2013 TIME PLOTTED => 11:49

DIST	COUNTY	ROUTE	POST MILES TOTAL PROJECT	SHEET No.	TOTAL SHEETS
12	Ora	91	8.1/9.3,10.1	317	357

REGISTERED CIVIL ENGINEER 01-25-13 DATE

4-15-13
PLANS APPROVAL DATE

REGISTERED PROFESSIONAL ENGINEER
WEI-KUNG HSIA
No. C50210
Exp. 06-30-13
CIVIL
STATE OF CALIFORNIA

The State of California or its officers or agents shall not be responsible for the accuracy or completeness of electronic copies of this plan sheet.

LEGEND:

⊡ SOIL NAIL

⊠ PROOF TEST NAIL OR AS DIRECTED BY THE ENGINEER.

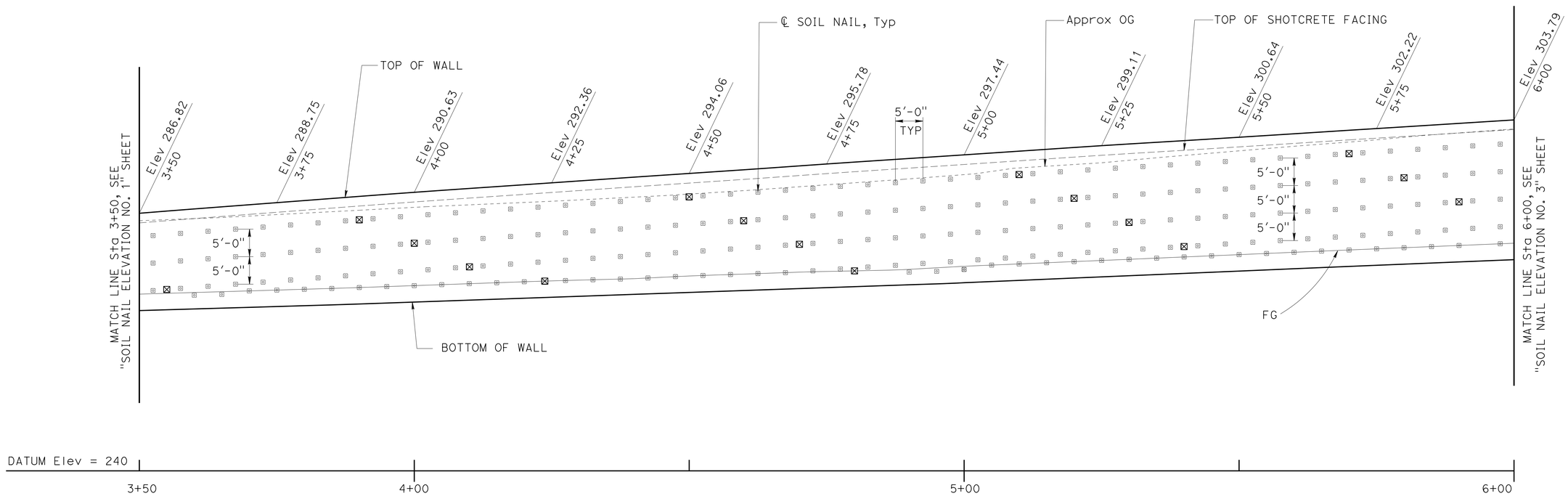

MIRRORED DEVELOPED ELEVATION

1" = 10'

NOTES:

1. CONCRETE BARRIER NOT SHOWN FOR CLARITY.
2. SEE ROAD PLANS FOR FG AT FACE OF BARRIER. BOTTOM OF WALL IS 3'-0" BELOW FG AT FACE OF BARRIER.
3. BOTTOM ROW OF SOIL NAILS SHALL BE NO MORE THAN 3'-6" AND NO LESS THAN 2'-6" FROM BOTTOM OF WALL, UNLESS OTHERWISE SHOWN.
4. VERTICAL DISTANCE FROM TOP OF SHOTCRETE TO TOP ROW OF SOIL NAILS SHALL BE 2'-6", UNLESS OTHERWISE SHOWN.

NOTE:
THE CONTRACTOR SHALL VERIFY ALL CONTROLLING FIELD DIMENSIONS BEFORE ORDERING OR FABRICATING ANY MATERIAL.

	BY	CHECKED
DESIGN	CHARLES LOMICKA	ARNEL VEGA
DETAILS	HENGAMEH MAHBOOBI	ARNEL VEGA
QUANTITIES	DARYOUSH BALBAS	A. VEGA / C. LOMICKA

STATE OF CALIFORNIA
DEPARTMENT OF TRANSPORTATION

DIVISION OF ENGINEERING SERVICES
STRUCTURE DESIGN
DESIGN BRANCH 19

BRIDGE NO. 55E0147
POST MILE 8.9

RETAINING WALL NO. 454
SOIL NAIL ELEVATION NO. 2

STRUCTURES DESIGN DETAIL SHEET (ENGLISH) (REV. 09-01-10)

ORIGINAL SCALE IN INCHES FOR REDUCED PLANS 0 1 2 3

UNIT: 3621
PROJECT NUMBER & PHASE: 1200000078 - 1 CONTRACT NO.: 12-0C5601

DISREGARD PRINTS BEARING EARLIER REVISION DATES

REVISION DATES: 05-24-12 01-22-13 01-28-13

SHEET 6 OF 29

FILE => 55e-0147-rw454-f-c-delev_02.dgn

USERNAME => s12161d DATE PLOTTED => 24-APR-2013 TIME PLOTTED => 11:49

DIST	COUNTY	ROUTE	POST MILES TOTAL PROJECT	SHEET No.	TOTAL SHEETS
12	Ora	91	8.1/9.3,10.1	318	357

REGISTERED CIVIL ENGINEER 01-25-13 DATE

4-15-13
PLANS APPROVAL DATE

REGISTERED PROFESSIONAL ENGINEER WEI-KUNG HSIA No. C50210 Exp. 06-30-13 CIVIL STATE OF CALIFORNIA

The State of California or its officers or agents shall not be responsible for the accuracy or completeness of electronic copies of this plan sheet.

LEGEND:

⊡ SOIL NAIL

⊠ PROOF TEST NAIL OR AS DIRECTED BY THE ENGINEER.

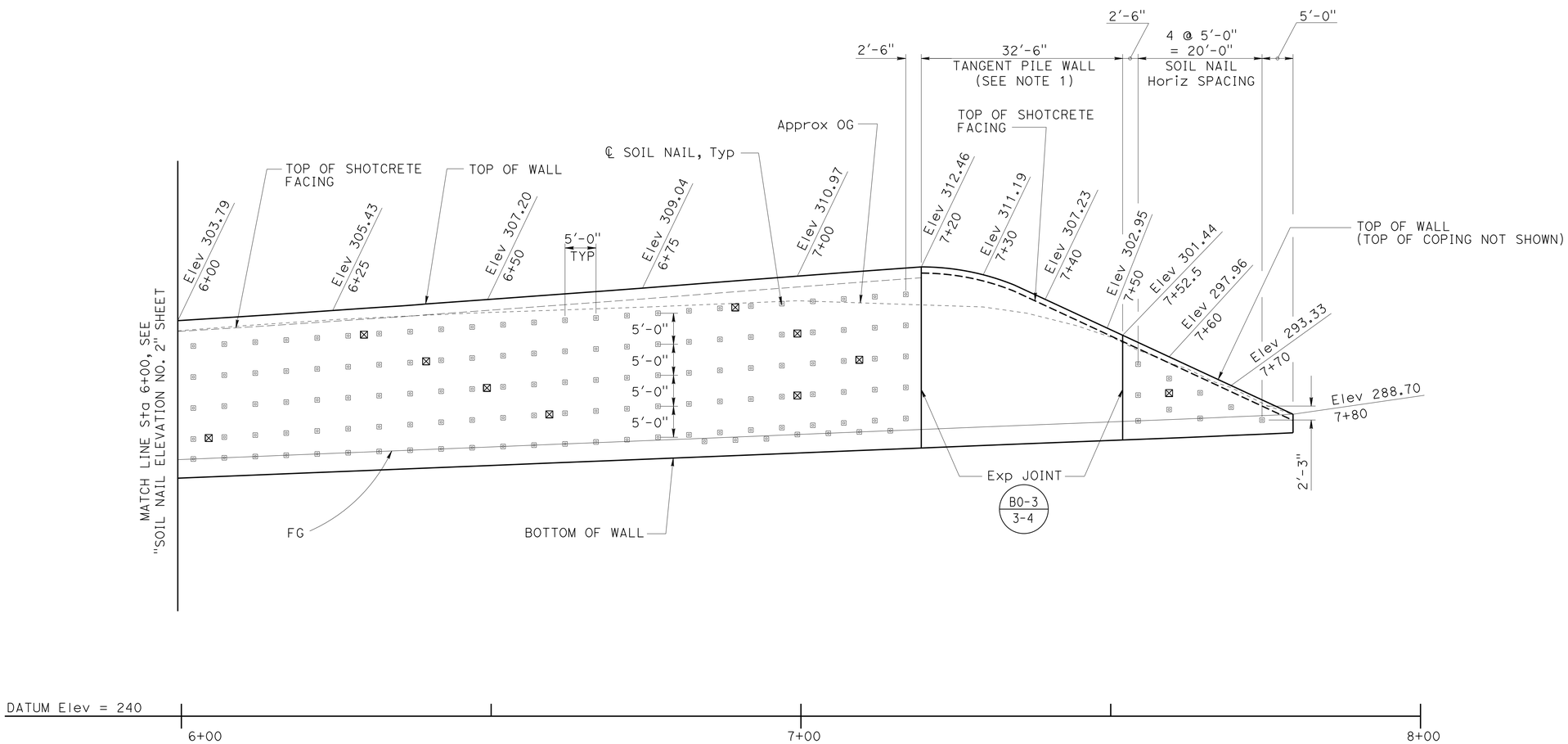

MIRRORED DEVELOPED ELEVATION

1" = 10'

NOTES:

1. CONCRETE BARRIER NOT SHOWN FOR CLARITY.
2. SEE ROAD PLANS FOR FG AT FACE OF BARRIER. BOTTOM OF WALL IS 3'-0" BELOW FG AT FACE OF BARRIER.
3. BOTTOM ROW OF SOIL NAILS SHALL BE NO MORE THAN 3'-6" AND NO LESS THAN 2'-6" FROM BOTTOM OF WALL, UNLESS OTHERWISE SHOWN.
4. VERTICAL DISTANCE FROM TOP OF SHOTCRETE TO TOP ROW OF SOIL NAILS SHALL BE 2'-6", UNLESS OTHERWISE SHOWN.

NOTE:
THE CONTRACTOR SHALL VERIFY ALL CONTROLLING FIELD DIMENSIONS BEFORE ORDERING OR FABRICATING ANY MATERIAL.

	BY	CHECKED
DESIGN	CHARLES LOMICKA	ARNEL VEGA
DETAILS	HENGAMEH MAHBOOBI	ARNEL VEGA
QUANTITIES	DARYOUSH BALBAS	A. VEGA / C. LOMICKA

STATE OF CALIFORNIA
DEPARTMENT OF TRANSPORTATION

DIVISION OF ENGINEERING SERVICES
STRUCTURE DESIGN
DESIGN BRANCH 19

BRIDGE NO. 55E0147
POST MILE 8.9

RETAINING WALL NO. 454
SOIL NAIL ELEVATION NO. 3

STRUCTURES DESIGN DETAIL SHEET (ENGLISH) (REV. 09-01-10)

ORIGINAL SCALE IN INCHES FOR REDUCED PLANS 0 1 2 3

UNIT: 3621
PROJECT NUMBER & PHASE: 1200000078 - 1 CONTRACT NO.: 12-0C5601

DISREGARD PRINTS BEARING EARLIER REVISION DATES

REVISION DATES: 05-24-12 01-22-13 01-28-13

SHEET 7 OF 29

FILE => 55e-0147-rw454-f-c-delev_03.dgn

USERNAME => s1216814 DATE PLOTTED => 24-APR-2013 TIME PLOTTED => 11:49

DIST	COUNTY	ROUTE	POST MILES TOTAL PROJECT	SHEET No.	TOTAL SHEETS
12	Ora	91	8.1/9.3,10.1	319	357

REGISTERED CIVIL ENGINEER 01-25-13 DATE

4-15-13
PLANS APPROVAL DATE

REGISTERED PROFESSIONAL ENGINEER WEI-KUNG HSIA No. C50210 Exp. 06-30-13 CIVIL STATE OF CALIFORNIA

The State of California or its officers or agents shall not be responsible for the accuracy or completeness of electronic copies of this plan sheet.

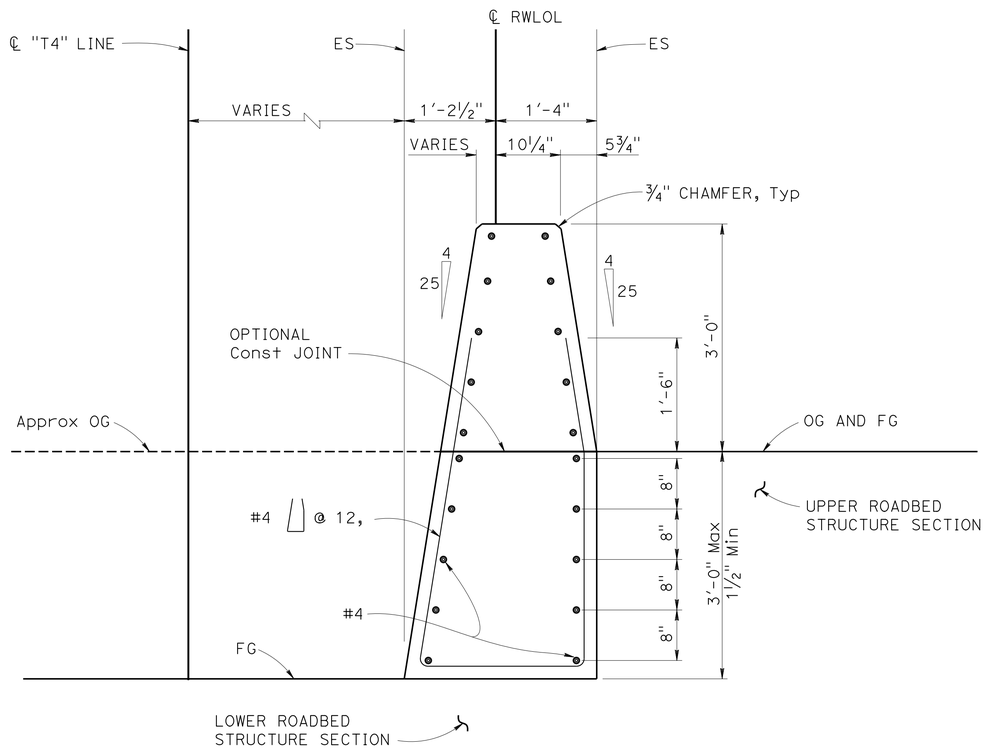

SECTION A-A
CONCRETE BARRIER TYPE 60C (MOD)

1" = 1'-0"

GENERAL NOTES
LOAD AND RESISTANCE FACTOR DESIGN

DESIGN CRITERIA:	AASHTO LRFD BRIDGE DESIGN SPECIFICATIONS, 4TH EDITION WITH CALTRANS AMENDMENTS
LOADING:	LEVEL GROUND WITH 2 FEET SURCHARGE
DESIGN SOIL PARAMETERS:	Φ = LONGTERM DRAINED FRICTION ANGLE 28° γ = UNIT WEIGHT OF SOIL 115 lb/ft^3
REINFORCED CONCRETE AND SHOTCRETE:	ASTM A706 fy = 60 ksi (YIELD STRENGTH OF REINFORCEMENT) f`c = 3600 psi (MINIMUM CONCRETE STRENGTH AT 28 DAYS)
STRUCTURAL STEEL:	ASTM A36 fy = 36 ksi
SOIL NAIL:	ASTM A615 / A615M GRADE 75, fy = 75 ksi

NOTES:

1. FOR DETAILS AND NOTES NOT SHOWN, SEE A76A
2. USE CONCRETE BARRIER END ANCHOR WHEN NECESSARY.
3. 36" ROADBED SURFACES OFFSET SHOWN.

NOTE:
THE CONTRACTOR SHALL VERIFY ALL CONTROLLING FIELD DIMENSIONS BEFORE ORDERING OR FABRICATING ANY MATERIAL.

	BY	CHECKED
DESIGN	RUI WANG	ARNEL VEGA
DETAILS	HENGAMEH MAHBOOBI	ARNEL VEGA
QUANTITIES	DARYOUSH BALBAS	ARNEL VEGA

STATE OF CALIFORNIA
DEPARTMENT OF TRANSPORTATION

DIVISION OF ENGINEERING SERVICES
STRUCTURE DESIGN
DESIGN BRANCH 19

BRIDGE NO. 55E0147
POST MILE 8.9

RETAINING WALL NO. 454
CONCRETE BARRIER TYPE 60C (MOD)

STRUCTURES DESIGN DETAIL SHEET (ENGLISH) (REV. 09-01-10)

ORIGINAL SCALE IN INCHES FOR REDUCED PLANS 0 1 2 3

UNIT: 3621
PROJECT NUMBER & PHASE: 1200000078 - 1 CONTRACT NO.: 12-0C5601

DISREGARD PRINTS BEARING EARLIER REVISION DATES

REVISION DATES 02/08/12 01/28/13 01/22/13

SHEET 8 OF 29

FILE => 55e-0147-rw454-g-t-br60.dgn

USERNAME => s126614 DATE PLOTTED => 24-APR-2013 TIME PLOTTED => 11:49

DIST	COUNTY	ROUTE	POST MILES TOTAL PROJECT	SHEET No.	TOTAL SHEETS
12	Ora	91	8.1/9.3,10.1	320	357

REGISTERED CIVIL ENGINEER 01-25-13 DATE

4-15-13
PLANS APPROVAL DATE

REGISTERED PROFESSIONAL ENGINEER WEI-KUNG HSIA No. C50210 Exp. 06-30-13 CIVIL STATE OF CALIFORNIA

The State of California or its officers or agents shall not be responsible for the accuracy or completeness of electronic copies of this plan sheet.

NOTES:

1. CLEARANCE TO REINFORCING STEEL IN CONCRETE BARRIER TO BE 1".
2. NOT ALL BARRIER REINFORCEMENT SHOWN.
3. NO EXPANSION JOINTS IN CONCRETE BARRIER OR BARRIER SLAB WITHIN WALL LIMITS, UON.
4. SPECIFIC CONCRETE BARRIER TO BE USED IS SHOWN ELSEWHERE IN PROJECT PLANS.
5. FOR CIP CONCRETE FACING AND SHOTCRETE FACING DETAILS, SEE "SOIL NAIL WALL DETAILS" SHEET.

(A) 2" EXPANDED POLYSTYRENE
(B) 1" EXPANDED POLYSTYRENE
(C) ISOLATION JOINT, SEE DETAIL "A" ON STANDARD PLAN P18
(D) MATCH EXISTING PAVEMENT SLOPE, SEE ROAD PLANS
∝ INDICATES BUNDLED BARS

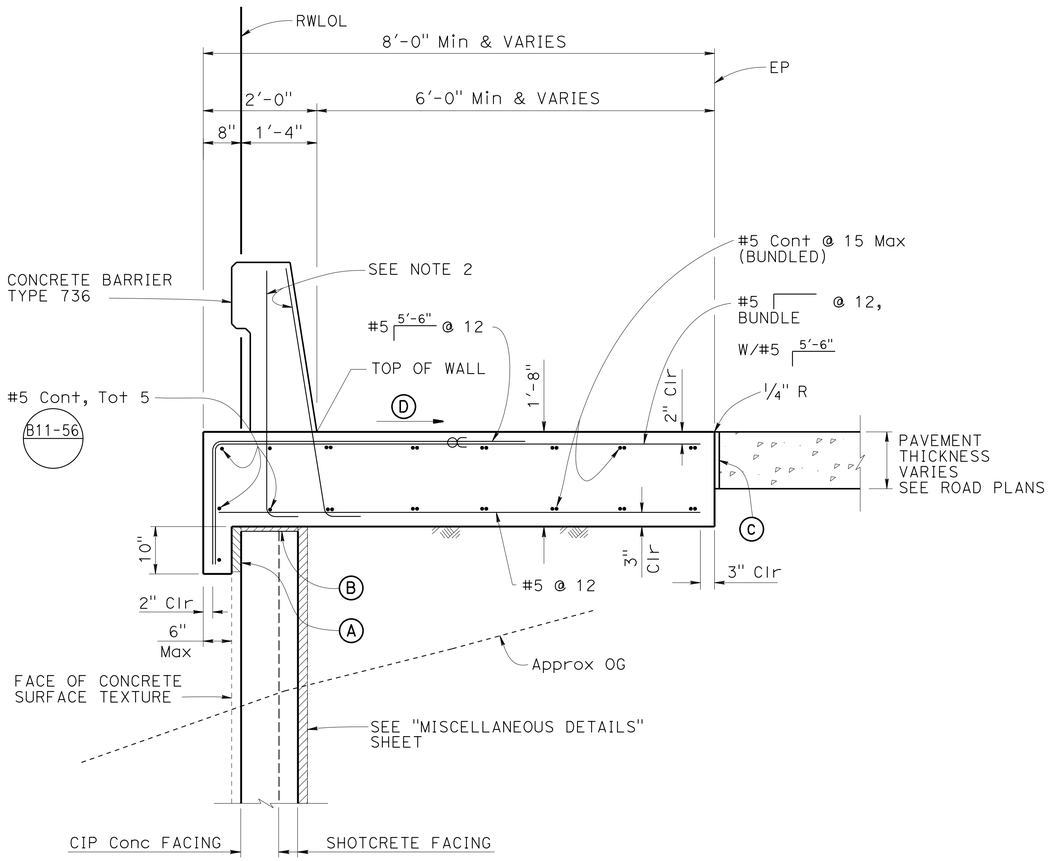

SECTION C-C

CONCRETE BARRIER SLAB

3/4" = 1'-0"

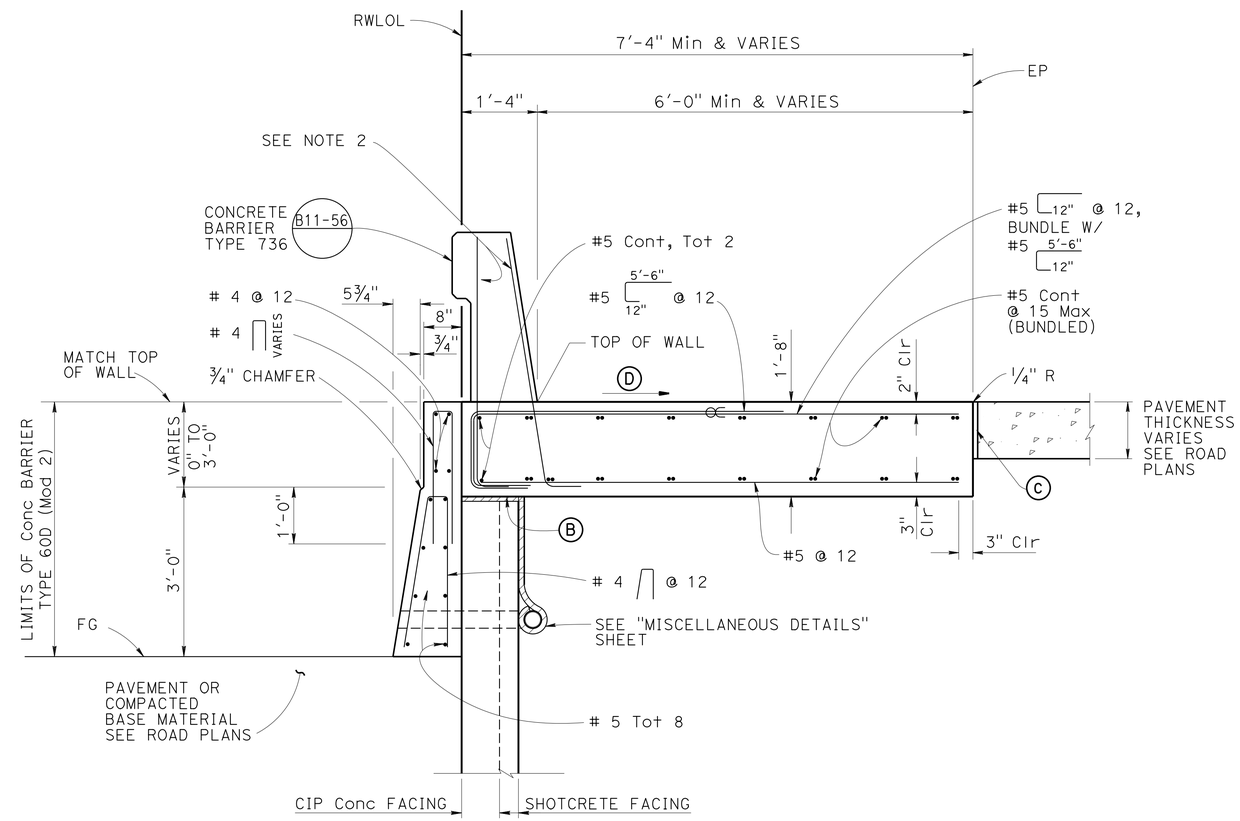

SECTION B-B

CONCRETE BARRIER (TYPE 60D MOD 2) AND CONCRETE BARRIER SLAB (MOD)

3/4" = 1'-0"

NOTE:
THE CONTRACTOR SHALL VERIFY ALL CONTROLLING FIELD DIMENSIONS BEFORE ORDERING OR FABRICATING ANY MATERIAL.

	BY	CHECKED
DESIGN	CHARLES LOMICKA	ARNEL VEGA
DETAILS	HENGAMEH MAHBOOBI	ARNEL VEGA
QUANTITIES	DARYOUSH BALBAS	ARNEL VEGA

STATE OF CALIFORNIA DEPARTMENT OF TRANSPORTATION

DIVISION OF ENGINEERING SERVICES STRUCTURE DESIGN DESIGN BRANCH 19

BRIDGE NO. 55E0147
POST MILE 8.9

RETAINING WALL NO. 454
CONCRETE BARRIER SLAB DETAILS

STRUCTURES DESIGN DETAIL SHEET (ENGLISH) (REV. 09-01-10)

ORIGINAL SCALE IN INCHES FOR REDUCED PLANS 0 1 2 3

UNIT: 3621
PROJECT NUMBER & PHASE: 1200000078 - 1 CONTRACT NO.: 12-0C5601

DISREGARD PRINTS BEARING EARLIER REVISION DATES → 02/08/12 01/29/13 01/28/13

SHEET 9 OF 29

FILE => 55e-0147-rw454-g-t-brdt.dgn

USERNAME => s121614 DATE PLOTTED => 24-APR-2013 TIME PLOTTED => 11:49

DIST	COUNTY	ROUTE	POST MILES TOTAL PROJECT	SHEET No.	TOTAL SHEETS
12	Ora	91	8.1/9.3,10.1	321	357

REGISTERED CIVIL ENGINEER 01-25-13 DATE

4-15-13
PLANS APPROVAL DATE

REGISTERED PROFESSIONAL ENGINEER WEI-KUNG HSIA No. C50210 Exp. 06-30-13 CIVIL STATE OF CALIFORNIA

The State of California or its officers or agents shall not be responsible for the accuracy or completeness of electronic copies of this plan sheet.

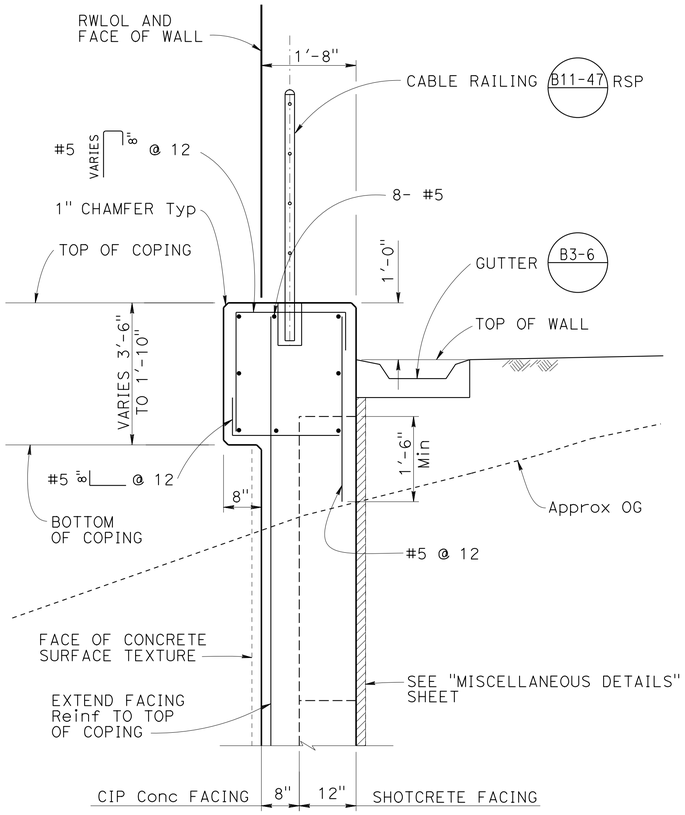

SECTION D-D
COPING TRANSITION

Sta 7+20 - 7+52.5
3/4" = 1'-0"

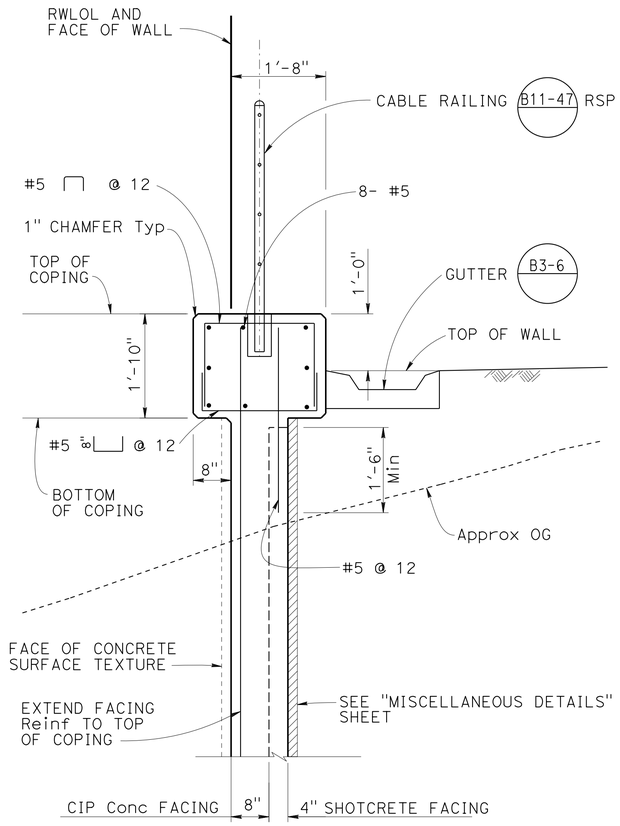

SECTION E-E
STANDARD COPING

Sta 7+52.5 - 7+70
3/4" = 1'-0"

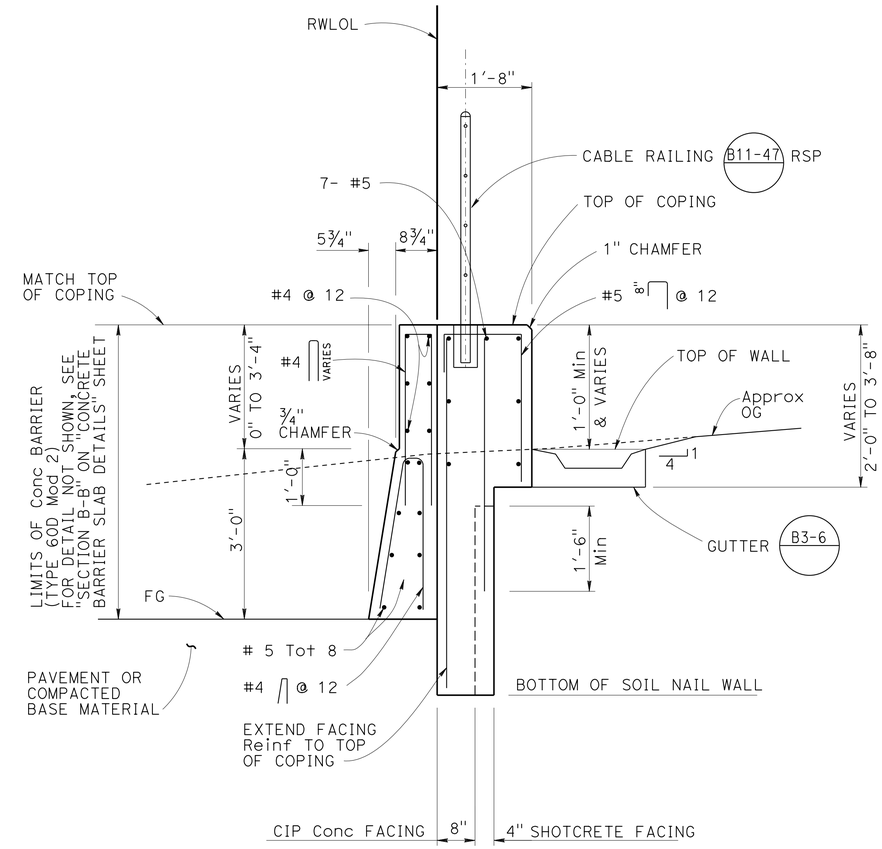

SECTION F-F

Sta 7+70 - 7+80
3/4" = 1'-0"

NOTES:

1. FOR CIP CONCRETE FACING AND SHOTCRETE FACING DETAILS, SEE "SOIL NAIL WALL DETAILS" AND "TANGENT PILE WALL DETAILS NO. 2" SHEETS.
2. CIDH PILE AND SOIL NAILS NOT SHOWN FOR CLARITY.

NOTE:
THE CONTRACTOR SHALL VERIFY ALL CONTROLLING FIELD DIMENSIONS BEFORE ORDERING OR FABRICATING ANY MATERIAL.

	BY	CHECKED
DESIGN	CHARLES LOMICKA	ARNEL VEGA
DETAILS	HENGAMEH MAHBOOBI	ARNEL VEGA
QUANTITIES	DARYOUSH BALBAS	ARNEL VEGA

STATE OF CALIFORNIA
DEPARTMENT OF TRANSPORTATION

DIVISION OF ENGINEERING SERVICES
STRUCTURE DESIGN
DESIGN BRANCH 19

BRIDGE NO. 55E0147
POST MILE 8.9

RETAINING WALL NO. 454
COPING DETAILS

STRUCTURES DESIGN DETAIL SHEET (ENGLISH) (REV. 09-01-10)

ORIGINAL SCALE IN INCHES FOR REDUCED PLANS 0 1 2 3

UNIT: 3621
PROJECT NUMBER & PHASE: 1200000078 - 1 CONTRACT NO.: 12-0C5601

DISREGARD PRINTS BEARING EARLIER REVISION DATES

REVISION DATES: 05/03/12 01/29/13 01/28/13

SHEET 10 OF 29

FILE => 55e-0147-rw454-g-t-copdt.dgn

USERNAME => s127614 DATE PLOTTED => 24-APR-2013 TIME PLOTTED => 11:49

DIST	COUNTY	ROUTE	POST MILES TOTAL PROJECT	SHEET No.	TOTAL SHEETS
12	Ora	91	8.1/9.3,10.1	322	357

REGISTERED CIVIL ENGINEER 01-25-13 DATE

4-15-13
PLANS APPROVAL DATE

REGISTERED PROFESSIONAL ENGINEER WEI-KUNG HSIA No. C50210 Exp. 06-30-13 CIVIL STATE OF CALIFORNIA

The State of California or its officers or agents shall not be responsible for the accuracy or completeness of electronic copies of this plan sheet.

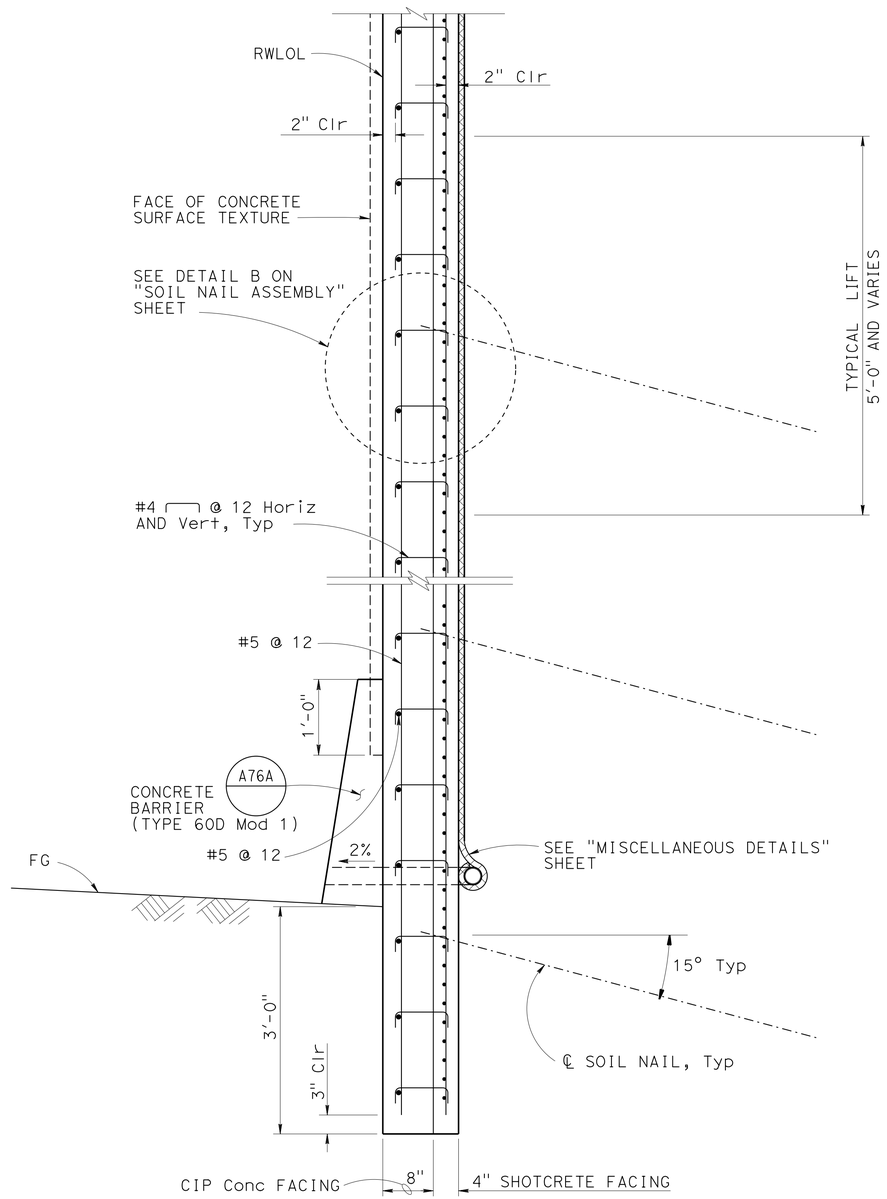

SOIL NAIL WALL TYPICAL SECTION

1" = 1'-0"

NOTE:
THE CONTRACTOR SHALL VERIFY ALL CONTROLLING FIELD DIMENSIONS BEFORE ORDERING OR FABRICATING ANY MATERIAL.

NOTES:

1. FOR DETAILS AT TOP OF WALL, SEE CONCRETE BARRIER SLAB DETAILS" AND "COPING DETAILS" SHEETS
2. FOR SOIL NAIL LOCATIONS, SEE "SOIL NAIL ELEVATION" SHEETS.

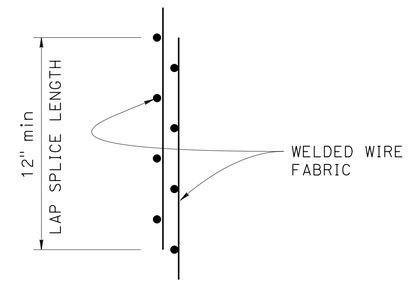

LAP SPLICE

No Scale

SOIL NAIL WALL DESIGN TABLE

ZONE	STATION	WALL HEIGHT (ft)	MINIMUM NAIL LENGTH (ft)	MAXIMUM NAIL SPACING VERTICAL (ft)	MAXIMUM NAIL SPACING HORIZONTAL (ft)	Q_D (lbs/ft)
1	1+00 to 1+24 7+74 to 7+80	<5	7	5	5	1400
1	1+24 to 2+25 7+64 to 7+74	5 to 10	13	5	5	1400
1	2+25 to 3+31 7+52.5 to 7+64	10 to 15	19	5	5	1400
1	3+31 to 4+54	15 to 20	25	5	5	1400
1	4+54 to 6+49	20 to 25	30	5	5	1400
1	6+49 to 7+20	25 to 30	36	5	5	1400

NOTES:

1. WALL HEIGHT IS THE VERTICAL DISTANCE FROM THE TOP OF THE SHOTCRETE TO THE BOTTOM OF THE WALL.
2. INCLINATION ANGLE OF NAILS IS 15 DEGREES MEASURED FROM HORIZONTAL.
3. FIRST ROW OF THE NAILS IS PLACED 2'-6" BELOW THE TOP OF SHOTCRETE, AND NAIL SPACING NEEDS TO BE ADJUSTED IN AREAS WITH GEOMETRIC CONSTRAINTS.
4. Q_D = DESIGN PULLOUT RESISTANCE

	BY	CHECKED
DESIGN	CHARLES LOMICKA	ARNEL VEGA
DETAILS	HENGAMEH MAHBOOBI	ARNEL VEGA
QUANTITIES	DARYOUSH BALBAS	CHARLES LOMICKA

STATE OF CALIFORNIA
DEPARTMENT OF TRANSPORTATION

DIVISION OF ENGINEERING SERVICES
STRUCTURE DESIGN
DESIGN BRANCH 19

BRIDGE NO. 55E0147
POST MILE 8.9

RETAINING WALL NO. 454
SOIL NAIL WALL DETAILS

STRUCTURES DESIGN DETAIL SHEET (ENGLISH) (REV. 09-01-10)

ORIGINAL SCALE IN INCHES FOR REDUCED PLANS 0 1 2 3

UNIT: 3621
PROJECT NUMBER & PHASE: 1200000078 - 1 CONTRACT NO.: 12-0C5601

DISREGARD PRINTS BEARING EARLIER REVISION DATES

REVISION DATES 09/20/12 01/29/13 01/28/13

SHEET 11 OF 29

FILE => 55e-0147-rw454-g-t-sdt.dgn

USERNAME => b121614 DATE PLOTTED => 24-APR-2013 TIME PLOTTED => 11:49

DIST	COUNTY	ROUTE	POST MILES TOTAL PROJECT	SHEET No.	TOTAL SHEETS
12	Ora	91	8.1/9.3,10.1	323	357

REGISTERED CIVIL ENGINEER 01-25-13 DATE

4-15-13
PLANS APPROVAL DATE

REGISTERED PROFESSIONAL ENGINEER WEI-KUNG HSIA No. C50210 Exp. 06-30-13 CIVIL STATE OF CALIFORNIA

The State of California or its officers or agents shall not be responsible for the accuracy or completeness of electronic copies of this plan sheet.

NOTES:

1. THE TEST NAIL EMBEDMENT LENGTH L_{eT}, SHALL BE EQUAL TO 2/3 OF THE EMBEDMENT LENGTH, LE, OF ADJACENT PRODUCTION SOIL NAIL ASSEMBLIES, BUT NOT LESS THAN 12'-0".
2. THE TOTAL LENGTH OF THE TEST NAIL ASSEMBLY EQUALS THE EMBEDMENT LENGTH PLUS THE LENGTH REQUIRED FOR JACKING EQUIPMENT.
3. INCLINATION OF PROOF TEST SOIL NAIL ASSEMBLY TO BE THE SAME AS ADJACENT SOIL NAIL ASSEMBLY.
4. CONTRACTOR TO DETERMINE DRILLED HOLE DIAMETER.
5. FINISHED GROUT SURFACE TO BE NORMAL TO THE BAR.

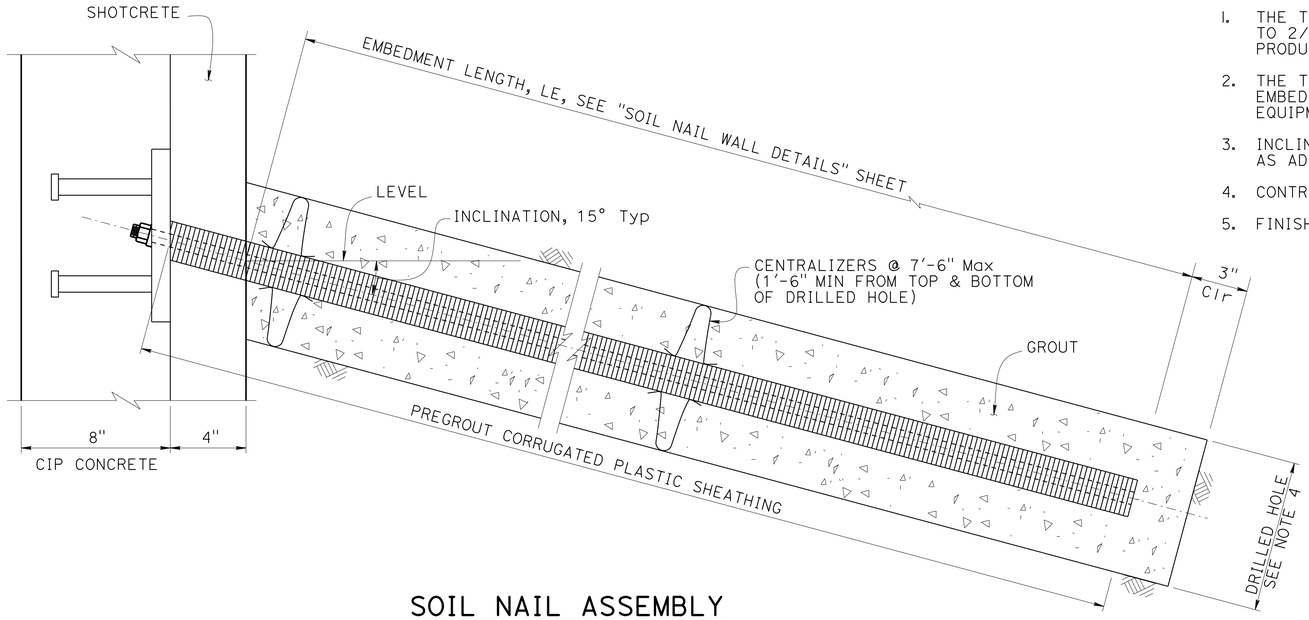

SOIL NAIL ASSEMBLY

3" = 1'

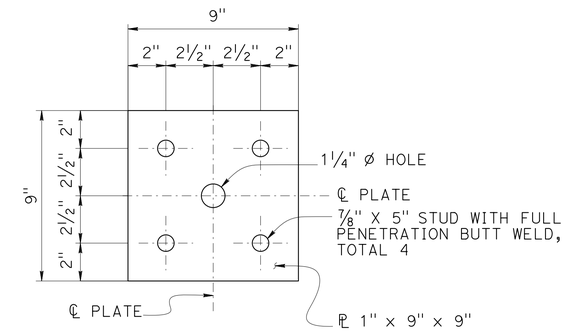

BEARING PLATE DETAIL

3" = 1'

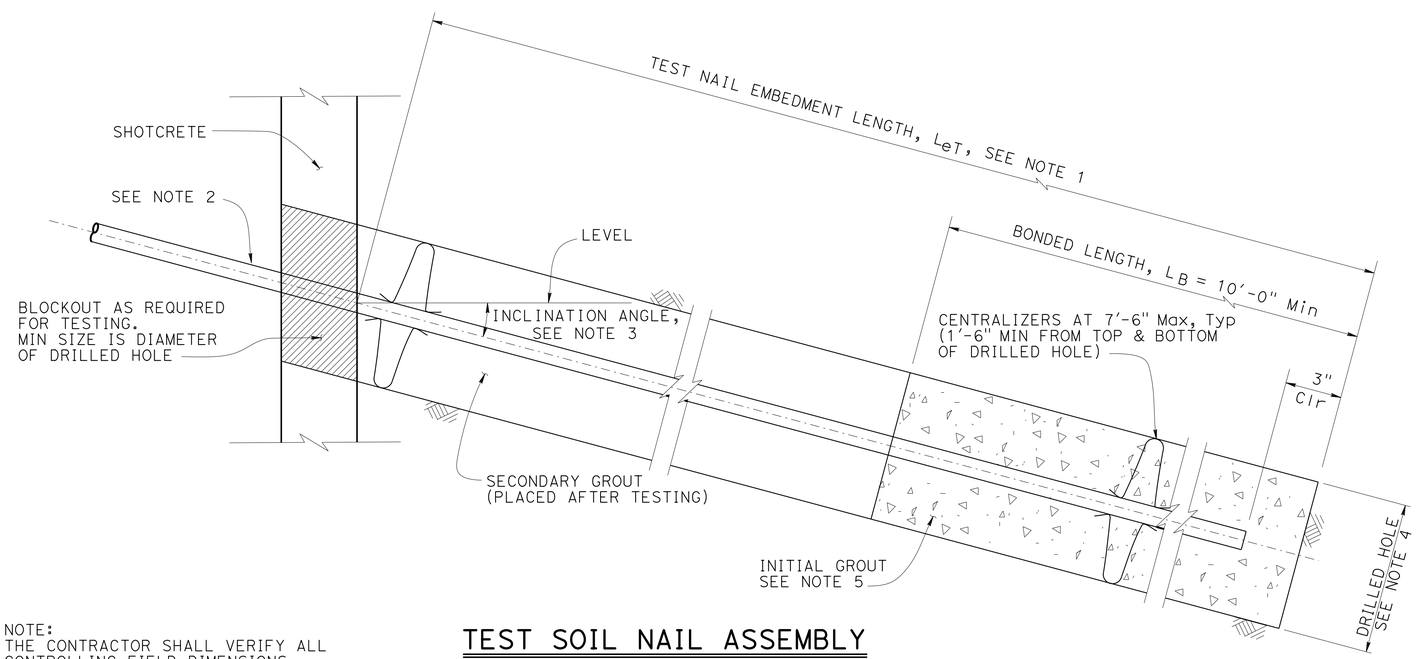

TEST SOIL NAIL ASSEMBLY

3" = 1'

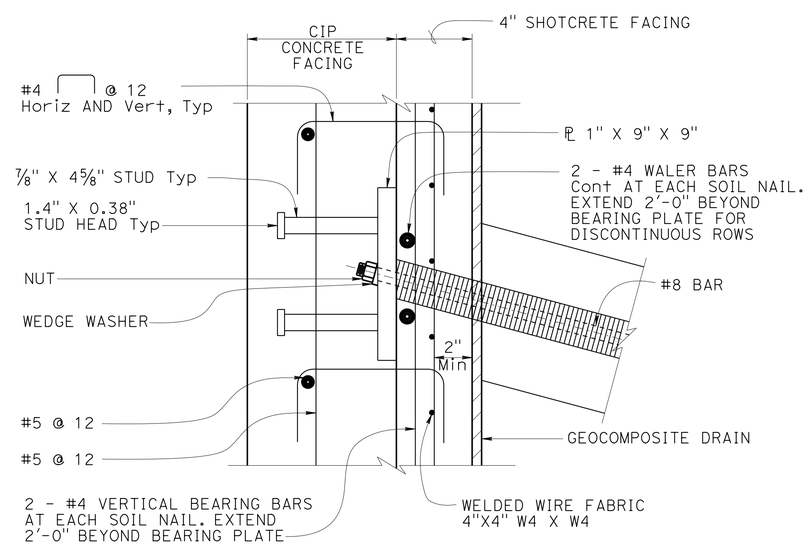

DETAIL B

3" = 1'

NOTE:
THE CONTRACTOR SHALL VERIFY ALL CONTROLLING FIELD DIMENSIONS BEFORE ORDERING OR FABRICATING ANY MATERIAL.

	BY	CHECKED
DESIGN	CHARLES LOMICKA	ARNEL VEGA
DETAILS	HENGAMEH MAHBOOBI	ARNEL VEGA
QUANTITIES	DARYOUSH BALBAS	ARNEL VEGA

STATE OF CALIFORNIA
DEPARTMENT OF TRANSPORTATION

DIVISION OF ENGINEERING SERVICES
STRUCTURE DESIGN
DESIGN BRANCH 19

BRIDGE NO. 55E0147
POST MILE 8.9

RETAINING WALL NO. 454
SOIL NAIL ASSEMBLY

STRUCTURES DESIGN DETAIL SHEET (ENGLISH) (REV. 09-01-10)

ORIGINAL SCALE IN INCHES FOR REDUCED PLANS 0 1 2 3

UNIT: 3621
PROJECT NUMBER & PHASE: 1200000078 - 1 CONTRACT NO.: 12-0C5601

DISREGARD PRINTS BEARING EARLIER REVISION DATES

REVISION DATES 05/03/12 01/28/13 01/29/13

SHEET 12 OF 29

FILE => 55e-0147-rw454-g-t-snassembly.dgn

USERNAME => s121614 DATE PLOTTED => 24-APR-2013 TIME PLOTTED => 11:49

DIST	COUNTY	ROUTE	POST MILES TOTAL PROJECT	SHEET No.	TOTAL SHEETS
12	Ora	91	8.1/9.3,10.1	324	357

REGISTERED CIVIL ENGINEER 01-25-13 DATE

4-15-13
PLANS APPROVAL DATE

REGISTERED PROFESSIONAL ENGINEER WEI-KUNG HSIA No. C50210 Exp. 06-30-13 CIVIL STATE OF CALIFORNIA

The State of California or its officers or agents shall not be responsible for the accuracy or completeness of electronic copies of this plan sheet.

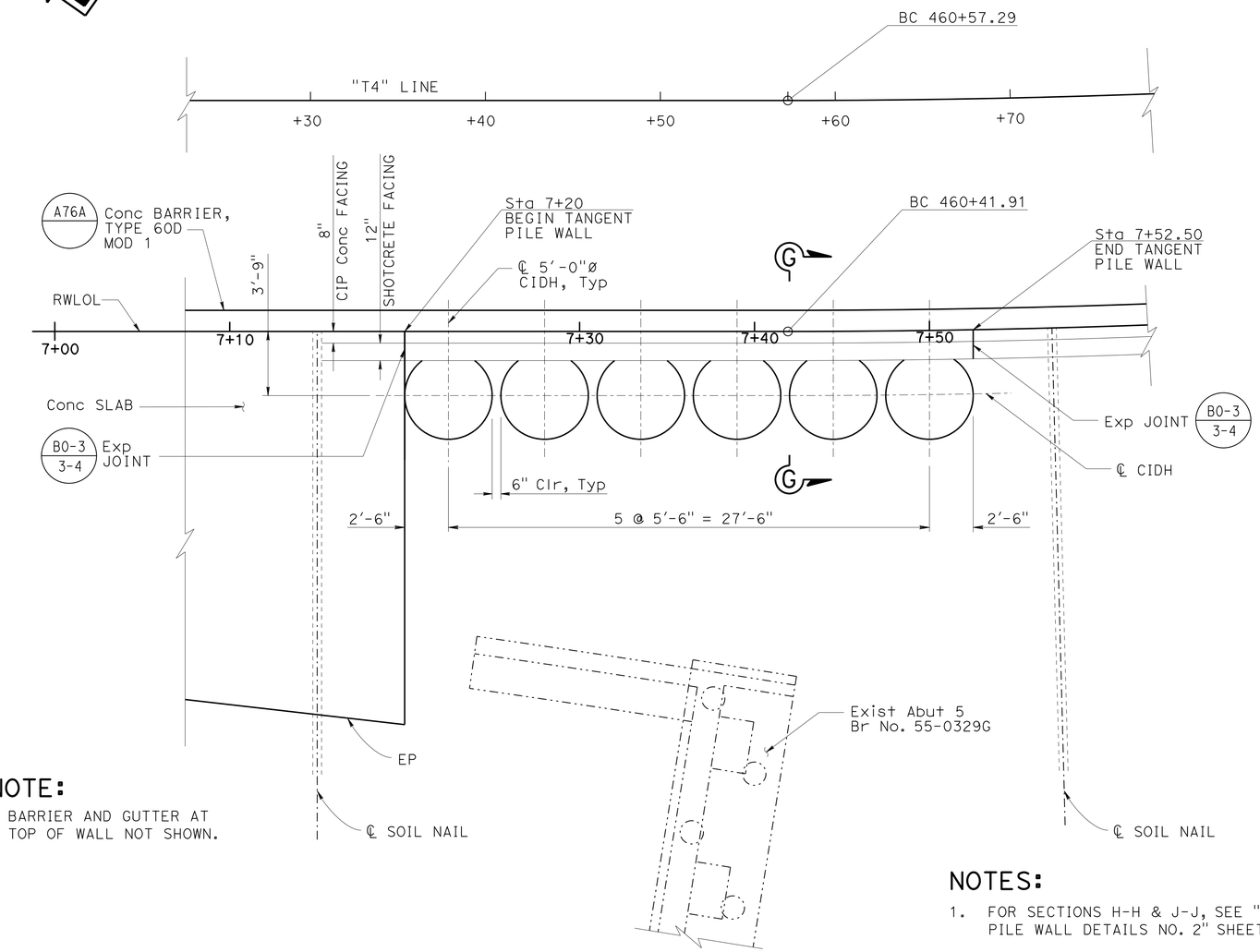

NOTE:

BARRIER AND GUTTER AT TOP OF WALL NOT SHOWN.

PLAN

1/4" = 1'-0"

NOTE:
THE CONTRACTOR SHALL VERIFY ALL CONTROLLING FIELD DIMENSIONS BEFORE ORDERING OR FABRICATING ANY MATERIAL.

NOTES:

1. FOR SECTIONS H-H & J-J, SEE "TANGENT PILE WALL DETAILS NO. 2" SHEET.
2. FOR FACING REINFORCEMENT, SEE TANGENT PILE WALL TYPICAL SECTION DETAIL ON "TANGENT PILE WALL DETAILS NO. 2" SHEET.
3. 3" ø PERFORATED PVC PIPE, WRAPPED AROUND WITH FILTER FABRIC. PLACE BETWEEN CIDH PILES, TOTAL 5 LOCATIONS. CORE HOLE AS NECESSARY. FOR ADDITIONAL DETAILS, SEE "MISCELLANEOUS DETAILS" SHEET.

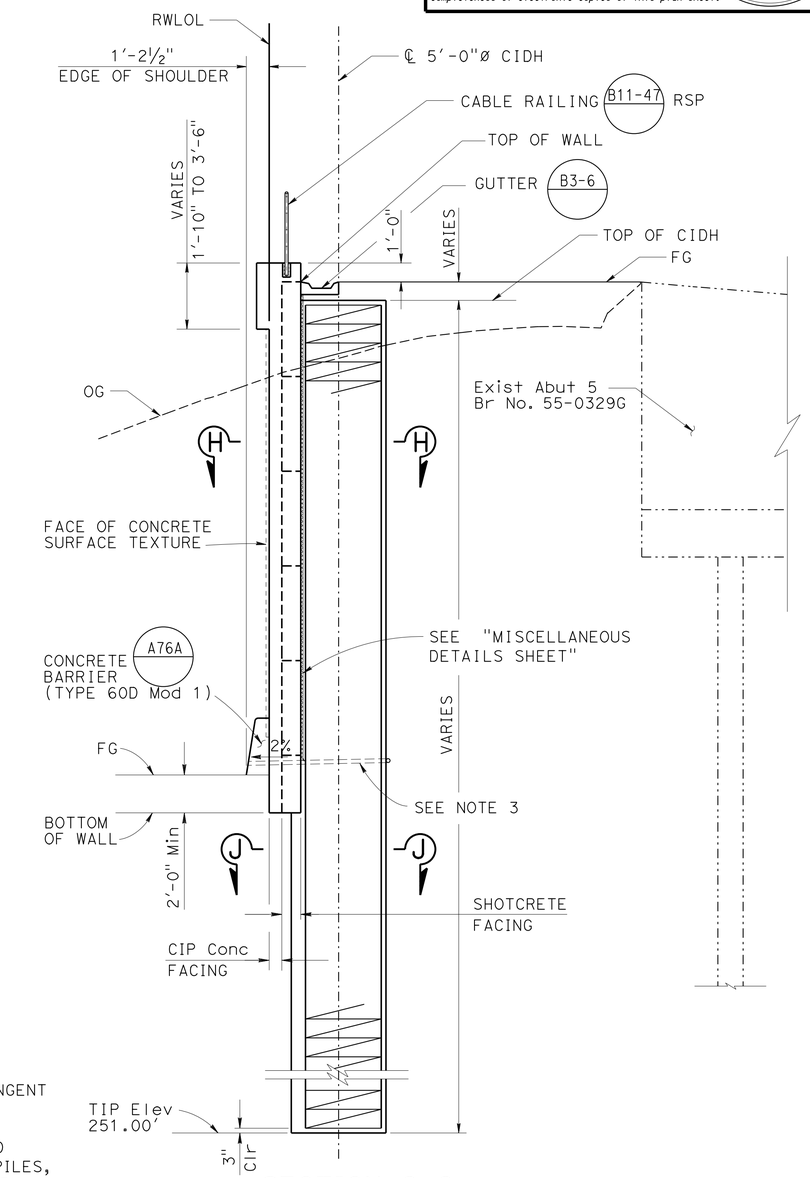

SECTION G-G

1/4" = 1'-0"

DESIGN	BY WEI-KUNG HSIA	CHECKED ARNEL VEGA	
DETAILS	BY H. INIGUEZ	CHECKED ARNEL VEGA	
QUANTITIES	BY DARYOUSH BALBAS	CHECKED ARNEL VEGA	

STATE OF CALIFORNIA
DEPARTMENT OF TRANSPORTATION

DIVISION OF ENGINEERING SERVICES
STRUCTURE DESIGN
DESIGN BRANCH 19

BRIDGE NO. 55E0147
POST MILE 8.9

RETAINING WALL NO. 454
TANGENT PILE WALL DETAILS NO. 1

STRUCTURES DESIGN DETAIL SHEET (ENGLISH) (REV. 09-01-10)

ORIGINAL SCALE IN INCHES FOR REDUCED PLANS 0 1 2 3

UNIT: 3621
PROJECT NUMBER & PHASE: 1200000078 - 1 CONTRACT NO.: 12-0C5601

DISREGARD PRINTS BEARING EARLIER REVISION DATES

REVISION DATES: 09/21/12 01/09/13 04/09/13

SHEET 13 OF 29

FILE => 55e-0147-rw454-tangent-pile-det_01.dgn

USERNAME => s121614 DATE PLOTTED => 24-APR-2013 TIME PLOTTED => 11:49

DIST	COUNTY	ROUTE	POST MILES TOTAL PROJECT	SHEET No.	TOTAL SHEETS
12	Ora	91	8.1/9.3,10.1	325	357

REGISTERED CIVIL ENGINEER 01-25-13 DATE

4-15-13
PLANS APPROVAL DATE

REGISTERED PROFESSIONAL ENGINEER WEI-KUNG HSIA No. C50210 Exp. 06-30-13 CIVIL STATE OF CALIFORNIA

The State of California or its officers or agents shall not be responsible for the accuracy or completeness of electronic copies of this plan sheet.

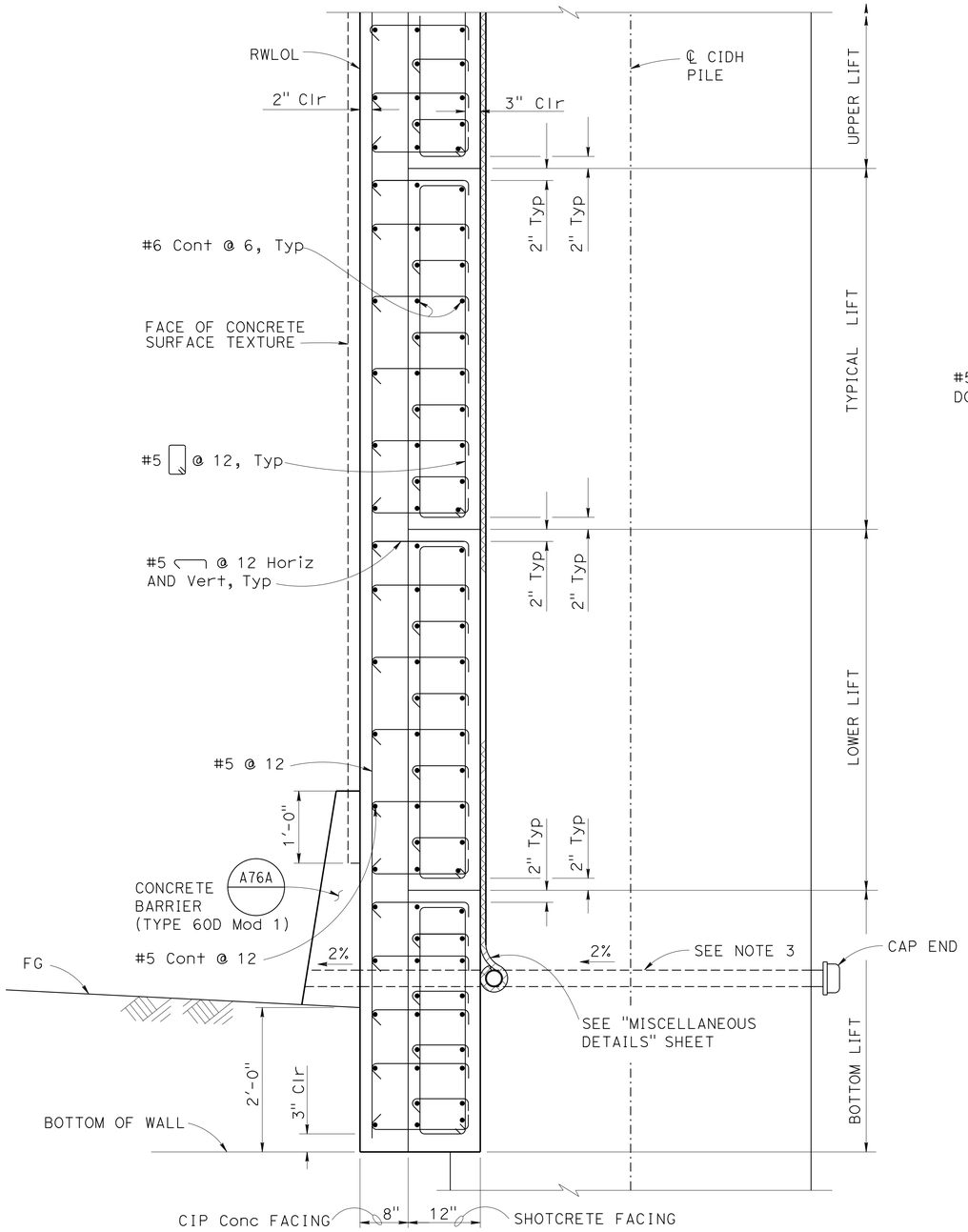

TANGENT PILE WALL TYPICAL SECTION

1" = 1'-0"

NOTE:
THE CONTRACTOR SHALL VERIFY ALL CONTROLLING FIELD DIMENSIONS BEFORE ORDERING OR FABRICATING ANY MATERIAL.

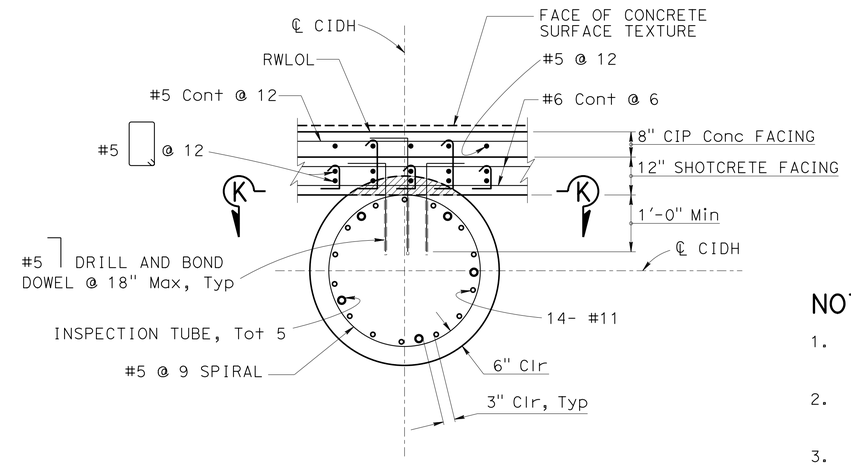

SECTION H-H

½" = 1'-0"

NOTES:

1. EXIST ABUTMENT 5 BRIDGE NO. 55-329G NOT SHOWN FOR CLARITY.
2. CIDH PILE AND DRILL AND BOND DOWEL REINF NOT SHOWN FOR CLARITY.
3. 3" ø PERFORATED PVC PIPE, WRAPPED AROUND WITH FILTER FABRIC. PLACE BETWEEN CIDH PILES, TOTAL 5 LOCATIONS. CORE HOLE AS NECESSARY. FOR ADDITIONAL DETAILS, SEE "VIEW A-A" ON "MISCELLANEOUS DETAILS" SHEET.

LEGEND:

INDICATES REMOVE PORTION OF CIDH FOR DRILL AND BOND DOWEL AND REBAR PLACING FROM TOP OF CIDH TO BOTTOM OF WALL.

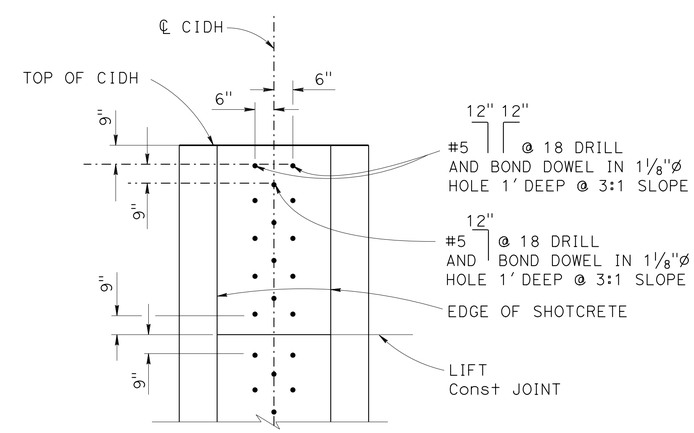

SECTION K-K

NO SCALE

NOTES:
FACING Reinf NOT SHOWN FOR CLARITY

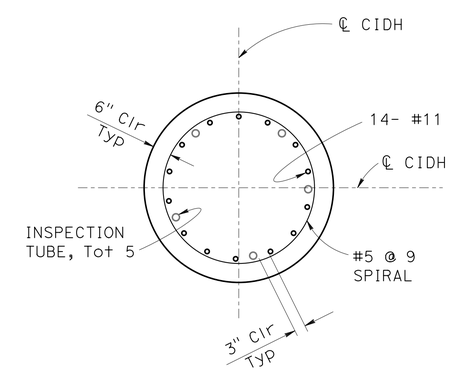

SECTION J-J

½" = 1'-0"

DESIGN	BY WEI-KUNG HSIA	CHECKED ARNEL VEGA	
DETAILS	BY H. MAHBOOBI/ H. INIGUEZ	CHECKED ARNEL VEGA	
QUANTITIES	BY DARYOUSH BALBAS	CHECKED ARNEL VEGA	

STATE OF CALIFORNIA
DEPARTMENT OF TRANSPORTATION

DIVISION OF ENGINEERING SERVICES
STRUCTURE DESIGN
DESIGN BRANCH 19

BRIDGE NO. 55E0147
POST MILE 8.9

RETAINING WALL NO. 454
TANGENT PILE WALL DETAILS NO. 2

STRUCTURES DESIGN DETAIL SHEET (ENGLISH) (REV. 09-01-10)

ORIGINAL SCALE IN INCHES FOR REDUCED PLANS 0 1 2 3

UNIT: 3621
PROJECT NUMBER & PHASE: 1200000078 - 1 CONTRACT NO.: 12-0C5601

DISREGARD PRINTS BEARING EARLIER REVISION DATES → 01/25/12 04/09/13 01/25/13

SHEET 14 OF 29

FILE => 55e-0147-rw454-tangent-pile-det_02.dgn

USERNAME => s121614 DATE PLOTTED => 24-APR-2013 TIME PLOTTED => 11:50

DIST	COUNTY	ROUTE	POST MILES TOTAL PROJECT	SHEET No.	TOTAL SHEETS
12	Ora	91	8.1/9.3,10.1	326	357

REGISTERED CIVIL ENGINEER 01-25-13 DATE

4-15-13
PLANS APPROVAL DATE

REGISTERED PROFESSIONAL ENGINEER WEI-KUNG HSIA No. C50210 Exp. 06-30-13 CIVIL STATE OF CALIFORNIA

The State of California or its officers or agents shall not be responsible for the accuracy or completeness of electronic copies of this plan sheet.

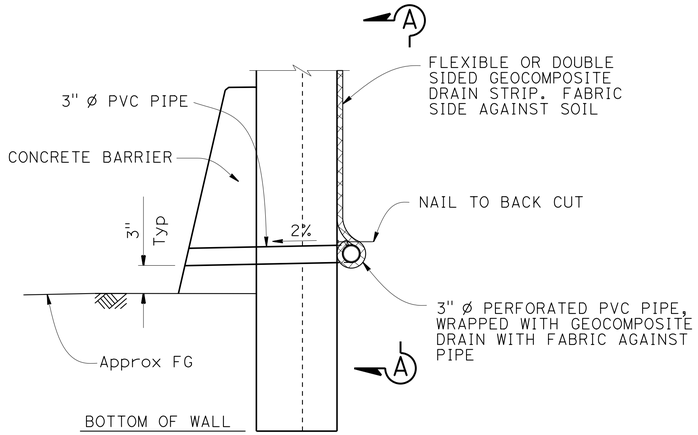

WALL DRAIN DETAIL AT WEEPHOLE

NO SCALE

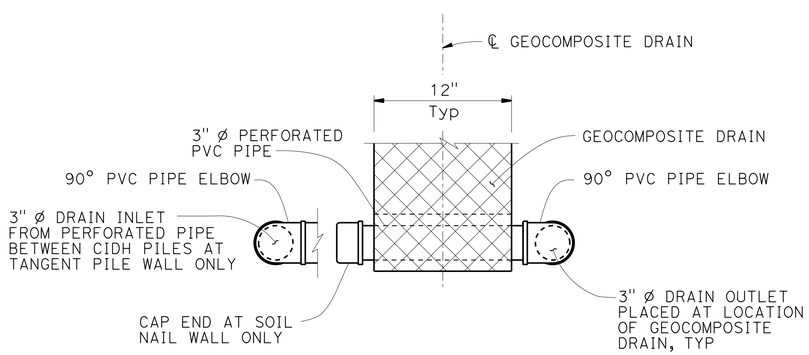

VIEW A-A

NO SCALE

NOTE: GEOCOMPOSITE DRAINS AT 5'-0" MAX SPACING, CENTERED BETWEEN COLUMNS OF SOIL NAILS, AND AT 5'-6" SPACING CENTERED BETWEEN CIDH PILES.

NOTE:
THE CONTRACTOR SHALL VERIFY ALL CONTROLLING FIELD DIMENSIONS BEFORE ORDERING OR FABRICATING ANY MATERIAL.

LEGEND

- STRUCTURE EXCAVATION (SOIL NAIL WALL)
- STRUCTURE EXCAVATION (RETAINING WALL)
- STRUCTURE BACKFILL (SOIL NAIL WALL)
- STRUCTURE BACKFILL (RETAINING WALL)
- STRUCTURE EXCAVATION (TYPE Y-1) (AERIALLY DEPOSITED LEAD)

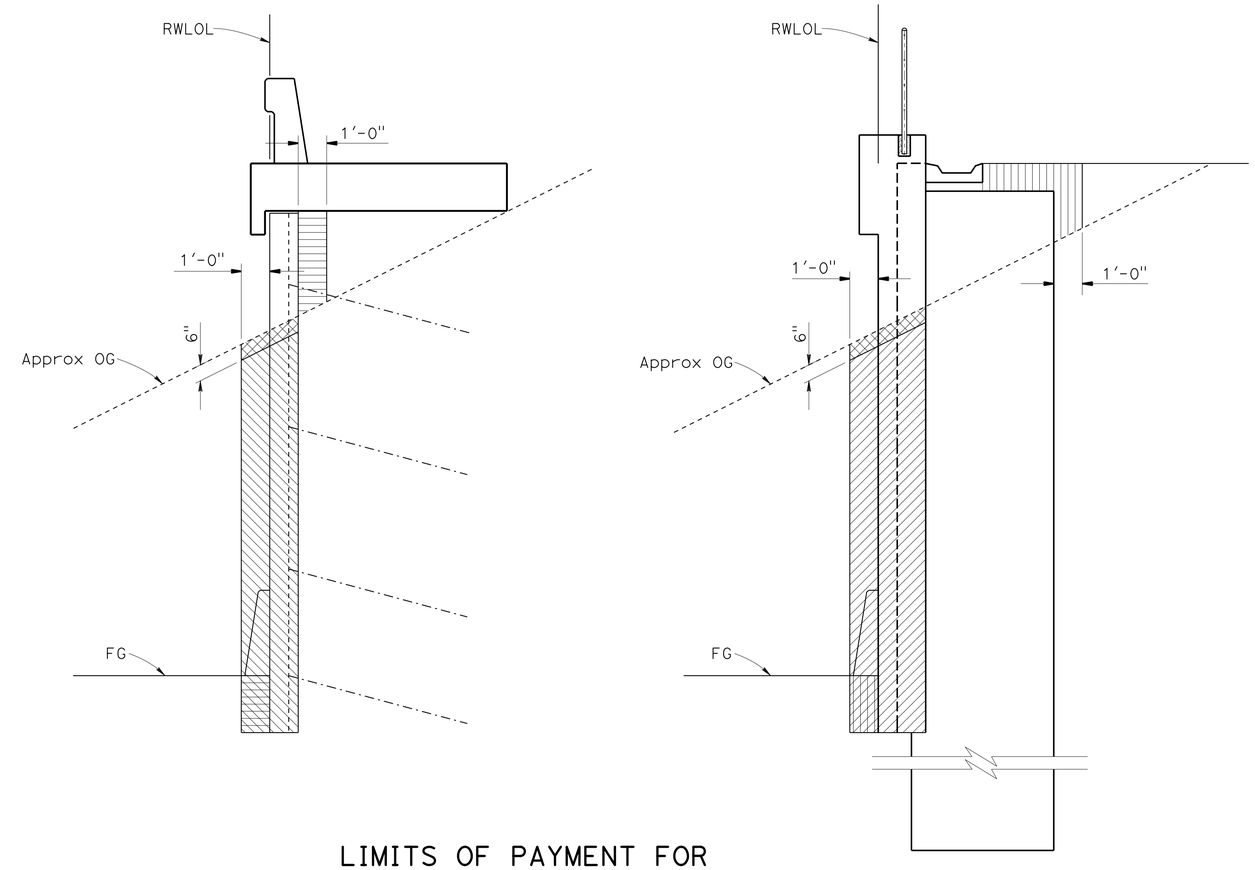

LIMITS OF PAYMENT FOR STRUCTURE EXCAVATION AND BACKFILL

NO SCALE

DESIGN	BY CHARLES LOMICKA	CHECKED ARNEL VEGA	
DETAILS	BY H. INIGUEZ \ H. MAHBOOBI	CHECKED ARNEL VEGA	
QUANTITIES	BY DARYOUSH BALBAS	CHECKED ARNEL VEGA	

STATE OF CALIFORNIA
DEPARTMENT OF TRANSPORTATION

DIVISION OF ENGINEERING SERVICES
STRUCTURE DESIGN
DESIGN BRANCH 19

BRIDGE NO. 55E0147
POST MILE 8.9

RETAINING WALL NO. 454
MISCELLANEOUS DETAILS

STRUCTURES DESIGN DETAIL SHEET (ENGLISH) (REV. 09-01-10)

ORIGINAL SCALE IN INCHES FOR REDUCED PLANS 0 1 2 3

UNIT: 3621
PROJECT NUMBER & PHASE: 1200000078 - 1 CONTRACT NO.: 12-0C5601

DISREGARD PRINTS BEARING EARLIER REVISION DATES → REVISION DATES 10/25/12 04/09/13 01/28/13

SHEET 15 OF 29

FILE => 55e-0147-rw454-t-r-det01.dgn

USERNAME => s121614 DATE PLOTTED => 24-APR-2013 TIME PLOTTED => 11:50

DIST	COUNTY	ROUTE	POST MILES TOTAL PROJECT	SHEET No.	TOTAL SHEETS
12	Ora	91	8.1/9.3,10.1	327	357

I-HONG SUN
LICENSED LANDSCAPE ARCHITECT

4-15-13
PLANS APPROVAL DATE

LICENSED LANDSCAPE ARCHITECT
I-HONG SUN No. 5464
Signature
12-31-14
Renewal Date
01-25-13
Date
STATE OF CALIFORNIA

The State of California or its officers or agents shall not be responsible for the accuracy or completeness of electronic copies of this plan sheet.

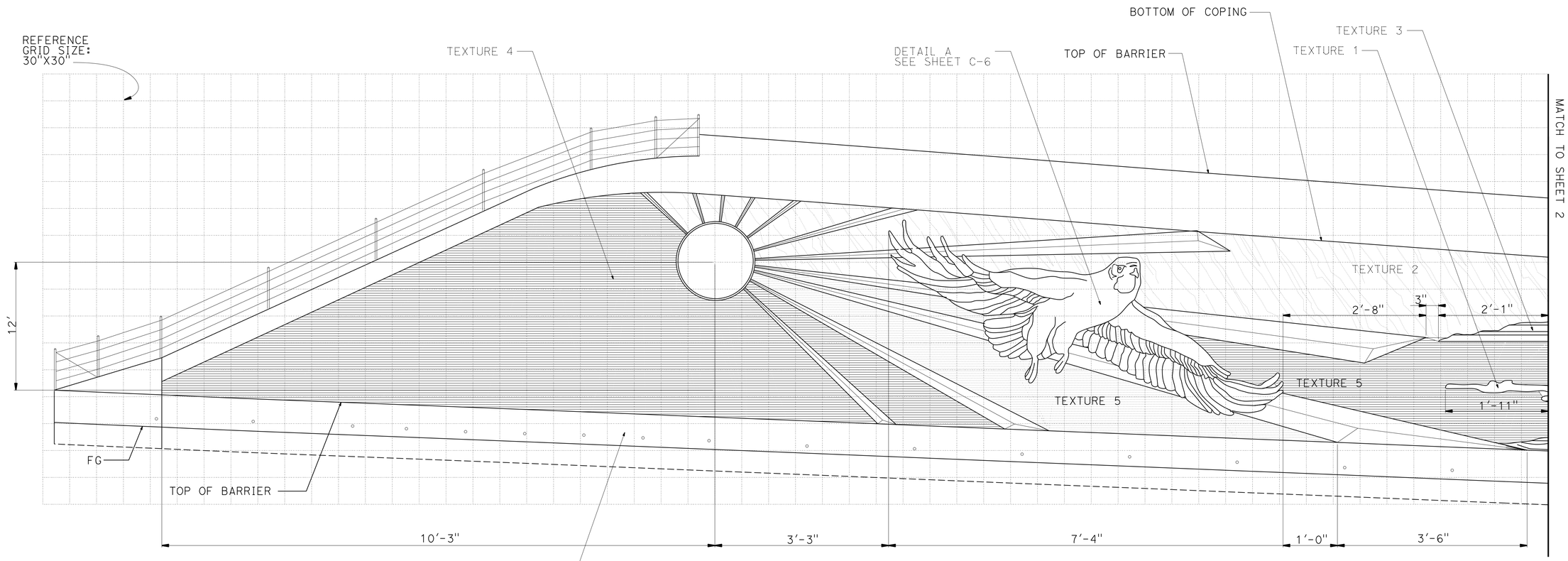

WALL LAYOUT 1
SCALE 1"=5'

DESIGN	BY J. Roberts	CHECKED I-Hong Sun	
DETAILS	BY J. Godett	CHECKED I-Hong Sun	
QUANTITIES	BY J. Godett	CHECKED I-Hong Sun	

STATE OF CALIFORNIA
DEPARTMENT OF TRANSPORTATION

DIVISION OF ENGINEERING SERVICES
STRUCTURE DESIGN
DESIGN BRANCH 19

BRIDGE NO. 55E0147
POST MILE 8.9

RETAINING WALL NO. 454
CONCRETE SURFACE TEXTURE NO. 1

STRUCTURES DESIGN DETAIL SHEET (ENGLISH) (REV. 09-01-10)

ORIGINAL SCALE IN INCHES FOR REDUCED PLANS 0 1 2 3

UNIT: 3621
PROJECT NUMBER & PHASE: 1200000078 - 1 CONTRACT NO.: 12-0C5601

DISREGARD PRINTS BEARING EARLIER REVISION DATES

REVISION DATES: 10-26-12 12-04-12 12-14-12 01-23-13

SHEET 16 OF 29

FILE => 55e-0147-rw454-u-arch_01.dgn

USERNAME => s12161d DATE PLOTTED => 24-APR-2013 TIME PLOTTED => 11:50

DIST	COUNTY	ROUTE	POST MILES TOTAL PROJECT	SHEET No.	TOTAL SHEETS
12	Ora	91	8.1/9.3,10.1	328	357

I-HONG SUN
LICENSED LANDSCAPE ARCHITECT

4-15-13
PLANS APPROVAL DATE

LICENSED LANDSCAPE ARCHITECT
I-HONG SUN NO. 5464
Signature
12-31-14
Renewal Date
01-25-13
Date
STATE OF CALIFORNIA

The State of California or its officers or agents shall not be responsible for the accuracy or completeness of electronic copies of this plan sheet.

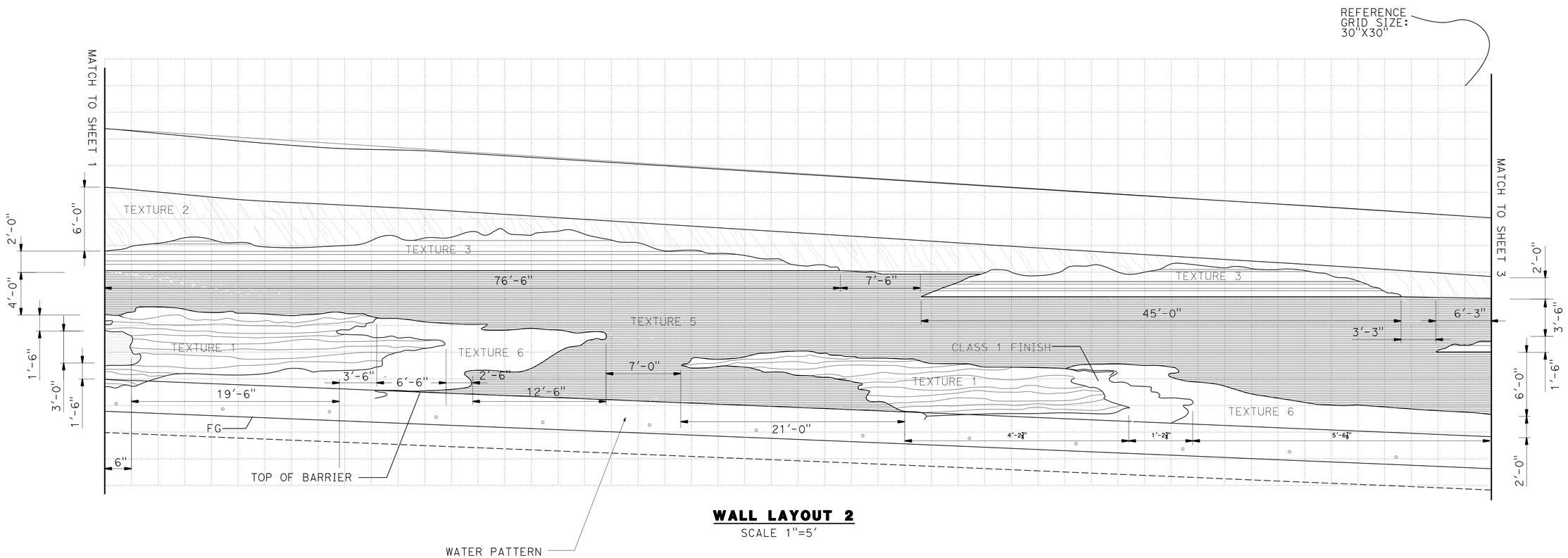

WALL LAYOUT 2
SCALE 1"=5'

DESIGN	BY J. Roberts	CHECKED I-Hong Sun	
DETAILS	BY J. Godett	CHECKED I-Hong Sun	
QUANTITIES	BY J. Godett	CHECKED I-Hong Sun	

STATE OF CALIFORNIA
DEPARTMENT OF TRANSPORTATION

DIVISION OF ENGINEERING SERVICES
STRUCTURE DESIGN
DESIGN BRANCH 19

BRIDGE NO. 55E0147
POST MILE 8.9

RETAINING WALL NO. 454
CONCRETE SURFACE TEXTURE NO. 2

STRUCTURES DESIGN DETAIL SHEET (ENGLISH) (REV. 09-01-10)

ORIGINAL SCALE IN INCHES FOR REDUCED PLANS 0 1 2 3

UNIT: 3621
PROJECT NUMBER & PHASE: 1200000078 - 1 CONTRACT NO.: 12-0C5601

DISREGARD PRINTS BEARING EARLIER REVISION DATES

REVISION DATES: 10-26-12 12-04-12 12-14-12 01-23-13

SHEET 17 OF 29

FILE => 55e-0147-rw454-u-arch_02.dgn

USERNAME => s121614 DATE PLOTTED => 24-APR-2013 TIME PLOTTED => 11:50

DIST	COUNTY	ROUTE	POST MILES TOTAL PROJECT	SHEET No.	TOTAL SHEETS
12	Ora	91	8.1/9.3,10.1	329	357

I-HONG SUN
LICENSED LANDSCAPE ARCHITECT

4-15-13
PLANS APPROVAL DATE

LICENSED LANDSCAPE ARCHITECT
I-HONG SUN No. 5464
Signature
12-31-14
Renewal Date
01-25-13
Date
STATE OF CALIFORNIA

The State of California or its officers or agents shall not be responsible for the accuracy or completeness of electronic copies of this plan sheet.

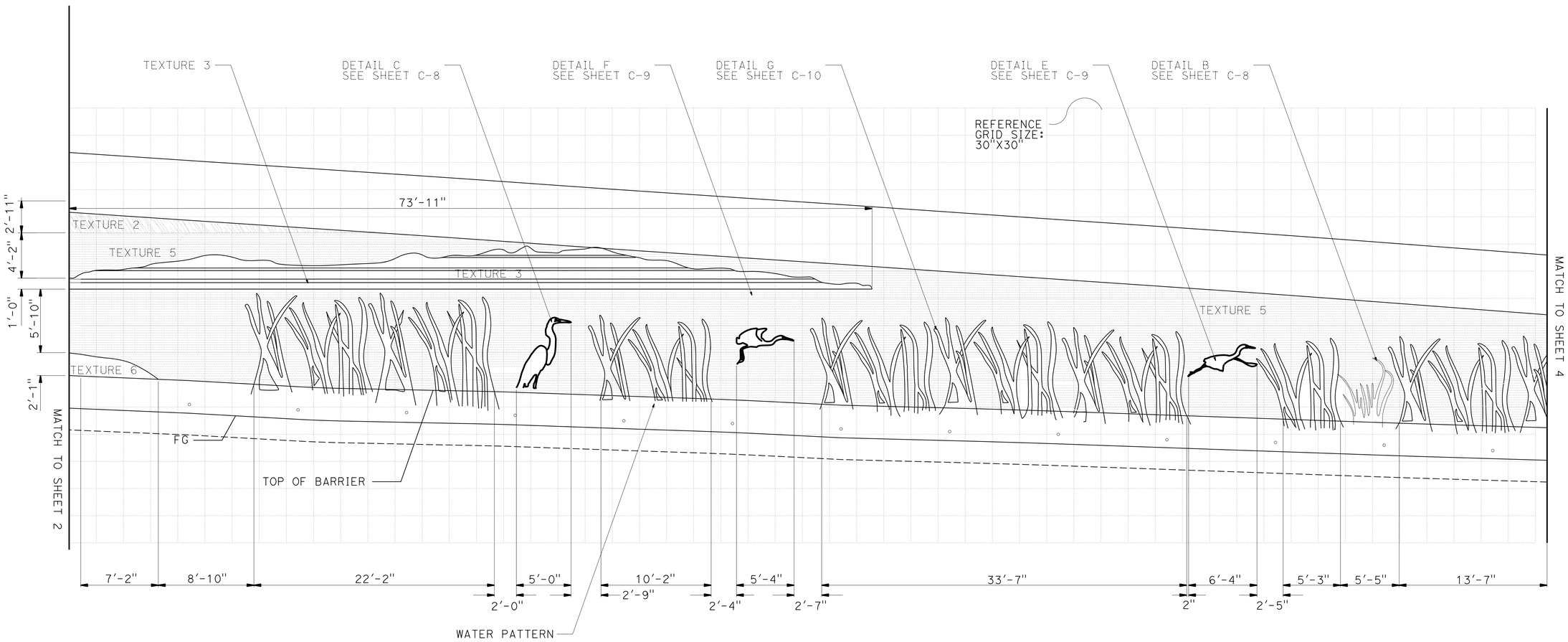

WALL SECTION 3
SCALE 1"=5'

DESIGN	BY J. Roberts	CHECKED I-Hong Sun	
DETAILS	BY J. Godett	CHECKED I-Hong Sun	
QUANTITIES	BY J. Godett	CHECKED I-Hong Sun	

STATE OF CALIFORNIA
DEPARTMENT OF TRANSPORTATION

DIVISION OF ENGINEERING SERVICES
STRUCTURE DESIGN
DESIGN BRANCH 19

BRIDGE NO. 55E0147
POST MILE 8.9

RETAINING WALL NO. 454
CONCRETE SURFACE TEXTURE NO. 3

STRUCTURES DESIGN DETAIL SHEET (ENGLISH) (REV. 09-01-10)

ORIGINAL SCALE IN INCHES FOR REDUCED PLANS 0 1 2 3

UNIT: 3621
PROJECT NUMBER & PHASE: 1200000078 - 1 CONTRACT NO.: 12-0C5601

DISREGARD PRINTS BEARING EARLIER REVISION DATES

REVISION DATES: 10-26-12 12-04-12 12-14-12 01-23-13

SHEET 18 OF 29

FILE => 55e-0147-rw454-u-arch_03.dgn

USERNAME => s121614 DATE PLOTTED => 24-APR-2013 TIME PLOTTED => 11:50

DIST	COUNTY	ROUTE	POST MILES TOTAL PROJECT	SHEET No.	TOTAL SHEETS
12	Ora	91	8.1/9.3,10.1	330	357

I-HONG SUN
LICENSED LANDSCAPE ARCHITECT

4-15-13
PLANS APPROVAL DATE

LICENSED LANDSCAPE ARCHITECT
I-HONG SUN No. 5464
Signature
12-31-14
Renewal Date
01-25-13
Date
STATE OF CALIFORNIA

The State of California or its officers or agents shall not be responsible for the accuracy or completeness of electronic copies of this plan sheet.

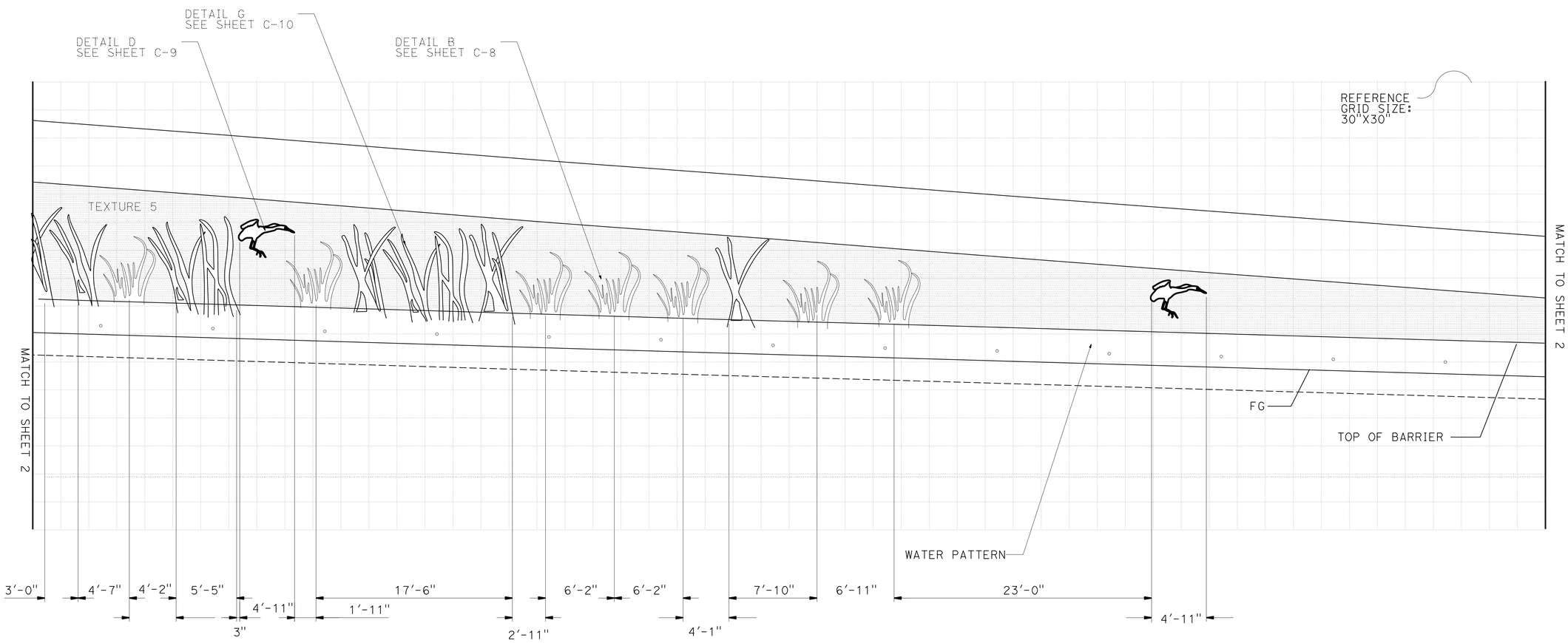

WALL SECTION 4

SCALE 1"=5'

DESIGN	BY J. Roberts	CHECKED I-Hong Sun	
DETAILS	BY J. Godett	CHECKED I-Hong Sun	
QUANTITIES	BY J. Godett	CHECKED I-Hong Sun	

STATE OF CALIFORNIA
DEPARTMENT OF TRANSPORTATION

DIVISION OF ENGINEERING SERVICES
STRUCTURE DESIGN
DESIGN BRANCH 19

BRIDGE NO. 55E0147
POST MILE 8.9

RETAINING WALL NO. 454
CONCRETE SURFACE TEXTURE NO. 4

STRUCTURES DESIGN DETAIL SHEET (ENGLISH) (REV. 09-01-10)

ORIGINAL SCALE IN INCHES FOR REDUCED PLANS 0 1 2 3

UNIT: 3621
PROJECT NUMBER & PHASE: 1200000078 - 1 CONTRACT NO.: 12-0C5601

DISREGARD PRINTS BEARING EARLIER REVISION DATES

REVISION DATES: 10-26-12 12-04-12 12-14-12 01-23-13

SHEET 19 OF 29

FILE => 55e-0147-rw454-u-arch_04.dgn

USERNAME => s121614 DATE PLOTTED => 24-APR-2013 TIME PLOTTED => 11:50

DIST	COUNTY	ROUTE	POST MILES TOTAL PROJECT	SHEET No.	TOTAL SHEETS
12	Ora	91	8.1/9.3,10.1	331	357

I-HONG SUN
LICENSED LANDSCAPE ARCHITECT

4-15-13
PLANS APPROVAL DATE

LICENSED LANDSCAPE ARCHITECT
I-HONG SUN No. 5464
Signature
12-31-14
Renewal Date
01-25-13
Date
STATE OF CALIFORNIA

The State of California or its officers or agents shall not be responsible for the accuracy or completeness of electronic copies of this plan sheet.

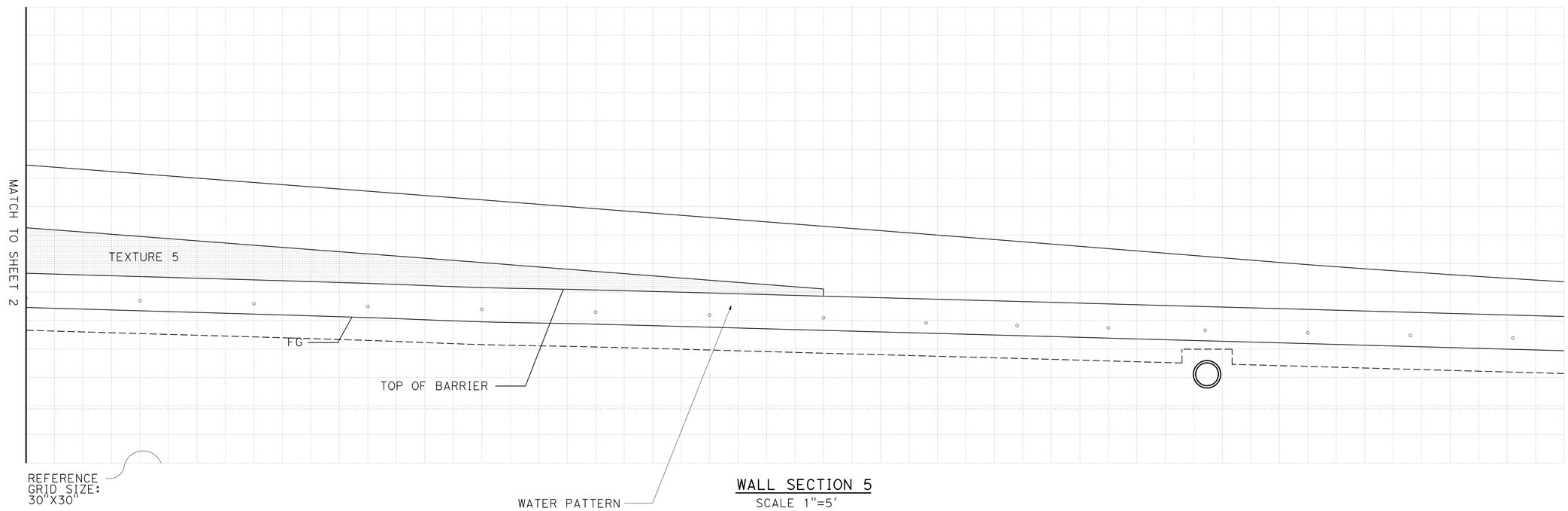

WALL SECTION 5
SCALE 1"=5'

DESIGN	BY J. Roberts	CHECKED I-Hong Sun	
DETAILS	BY J. Godett	CHECKED I-Hong Sun	
QUANTITIES	BY J. Godett	CHECKED I-Hong Sun	

STATE OF CALIFORNIA
DEPARTMENT OF TRANSPORTATION

DIVISION OF ENGINEERING SERVICES
STRUCTURE DESIGN
DESIGN BRANCH 19

BRIDGE NO. 55E0147
POST MILE 8.9

RETAINING WALL NO. 454
CONCRETE SURFACE TEXTURE NO. 5

STRUCTURES DESIGN DETAIL SHEET (ENGLISH) (REV. 09-01-10)

ORIGINAL SCALE IN INCHES FOR REDUCED PLANS 0 1 2 3

UNIT: 3621
PROJECT NUMBER & PHASE: 1200000078 - 1 CONTRACT NO.: 12-0C5601

DISREGARD PRINTS BEARING EARLIER REVISION DATES

REVISION DATES: 10-26-12 12-04-12 12-14-12 01-23-13

SHEET 20 OF 29

FILE => 55e-0147-rw454-u-arch_05.dgn

USERNAME => s121614 DATE PLOTTED => 24-APR-2013 TIME PLOTTED => 11:50

DIST	COUNTY	ROUTE	POST MILES TOTAL PROJECT	SHEET No.	TOTAL SHEETS
12	Ora	91	8.1/9.3,10.1	332	357

I-HONG SUN
LICENSED LANDSCAPE ARCHITECT

4-15-13
PLANS APPROVAL DATE

LICENSED LANDSCAPE ARCHITECT
I-HONG SUN NO. 5464
Signature
12-31-14
Renewal Date
01-25-13
Date
STATE OF CALIFORNIA

The State of California or its officers or agents shall not be responsible for the accuracy or completeness of electronic copies of this plan sheet.

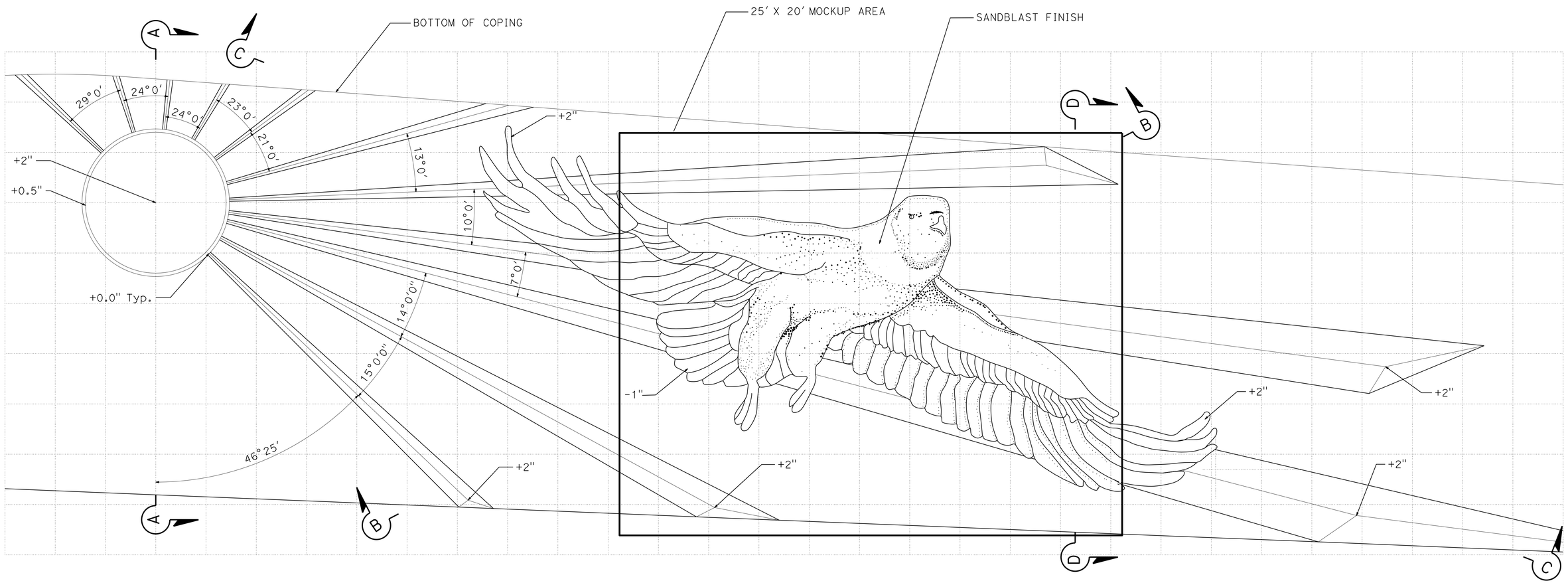

DETAIL A

1" = 2'-6"

DESIGN	BY J. Roberts	CHECKED I-Hong Sun	
DETAILS	BY J. Godett	CHECKED I-Hong Sun	
QUANTITIES	BY J. Godett	CHECKED I-Hong Sun	

STATE OF CALIFORNIA
DEPARTMENT OF TRANSPORTATION

DIVISION OF ENGINEERING SERVICES
STRUCTURE DESIGN
DESIGN BRANCH 19

BRIDGE NO. 55E0147
POST MILE 8.9

RETAINING WALL NO. 454
CONCRETE SURFACE TEXTURE NO.6

STRUCTURES DESIGN DETAIL SHEET (ENGLISH) (REV. 09-01-10)

ORIGINAL SCALE IN INCHES FOR REDUCED PLANS 0 1 2 3

UNIT: 3621
PROJECT NUMBER & PHASE: 1200000078 - 1 CONTRACT NO.: 12-0C5601

DISREGARD PRINTS BEARING EARLIER REVISION DATES

REVISION DATES: 10-26-12 12-04-12 12-14-12 01-23-13

SHEET 21 OF 29

FILE => 55e-0147-rw454-u-arch_06.dgn

USERNAME => s127614 DATE PLOTTED => 24-APR-2013 TIME PLOTTED => 11:50

DIST	COUNTY	ROUTE	POST MILES TOTAL PROJECT	SHEET No.	TOTAL SHEETS
12	Ora	91	8.1/9.3,10.1	333	357

I-HONG SUN
LICENSED LANDSCAPE ARCHITECT

4-15-13
PLANS APPROVAL DATE

LICENSED LANDSCAPE ARCHITECT
I-HONG SUN No. 5464
Signature
12-31-14
Renewal Date
01-25-13
Date
STATE OF CALIFORNIA

The State of California or its officers or agents shall not be responsible for the accuracy or completeness of electronic copies of this plan sheet.

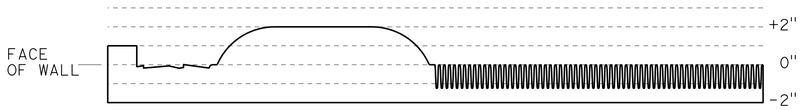

SECTION A-A

H - 1"= 2'-6"
V - 3"= 1'-0"

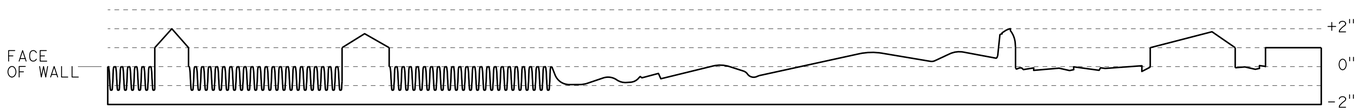

SECTION B-B

H - 1"= 2'-6"
V - 3"= 1'-0"

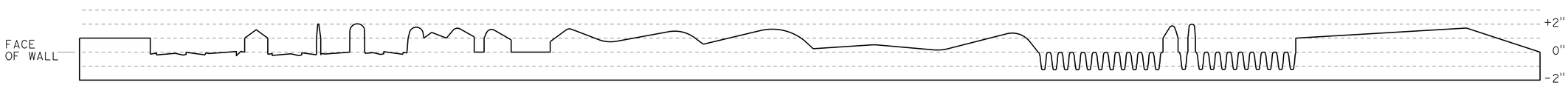

SECTION C-C

H - 1"= 2'-6"
V - 3"= 1'-0"

SECTION D-D

H - 1"= 2'-6"
V - 3"= 1'-0"

DESIGN	BY J. Roberts	CHECKED I-Hong Sun	
DETAILS	BY J. Godett	CHECKED I-Hong Sun	
QUANTITIES	BY J. Godett	CHECKED I-Hong Sun	

STATE OF CALIFORNIA
DEPARTMENT OF TRANSPORTATION

DIVISION OF ENGINEERING SERVICES
STRUCTURE DESIGN
DESIGN BRANCH 19

BRIDGE NO. 55E0147
POST MILE 8.9

RETAINING WALL NO. 454
CONCRETE SURFACE TEXTURE NO. 7

STRUCTURES DESIGN DETAIL SHEET (ENGLISH) (REV. 09-01-10)

ORIGINAL SCALE IN INCHES FOR REDUCED PLANS 0 1 2 3

UNIT: 3621
PROJECT NUMBER & PHASE: 1200000078 - 1 CONTRACT NO.: 12-0C5601

DISREGARD PRINTS BEARING EARLIER REVISION DATES

REVISION DATES: 10-29-12 12-04-12 12-14-12 01-23-13

SHEET 22 OF 29

FILE => 55e-0147-rw454-u-arch_07.dgn

USERNAME => s121614 DATE PLOTTED => 24-APR-2013 TIME PLOTTED => 11:50

DIST	COUNTY	ROUTE	POST MILES TOTAL PROJECT	SHEET No.	TOTAL SHEETS
12	Ora	91	8.1/9.3,10.1	334	357

I-HONG SUN
LICENSED LANDSCAPE ARCHITECT

4-15-13
PLANS APPROVAL DATE

LICENSED LANDSCAPE ARCHITECT
I-HONG SUN No. 5464
Signature
12-31-14
Renewal Date
01-25-13
Date
STATE OF CALIFORNIA

The State of California or its officers or agents shall not be responsible for the accuracy or completeness of electronic copies of this plan sheet.

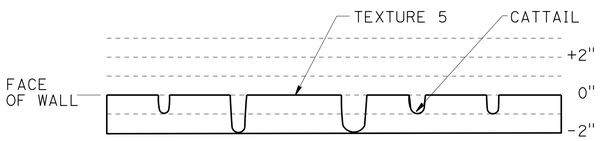

SECTION 1

H - 1"= 1'-0"
V - 3"= 1'-0"

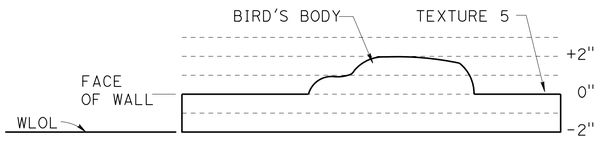

SECTION 2-2

H - 1"= 1'-0"
V - 3"= 1'-0"

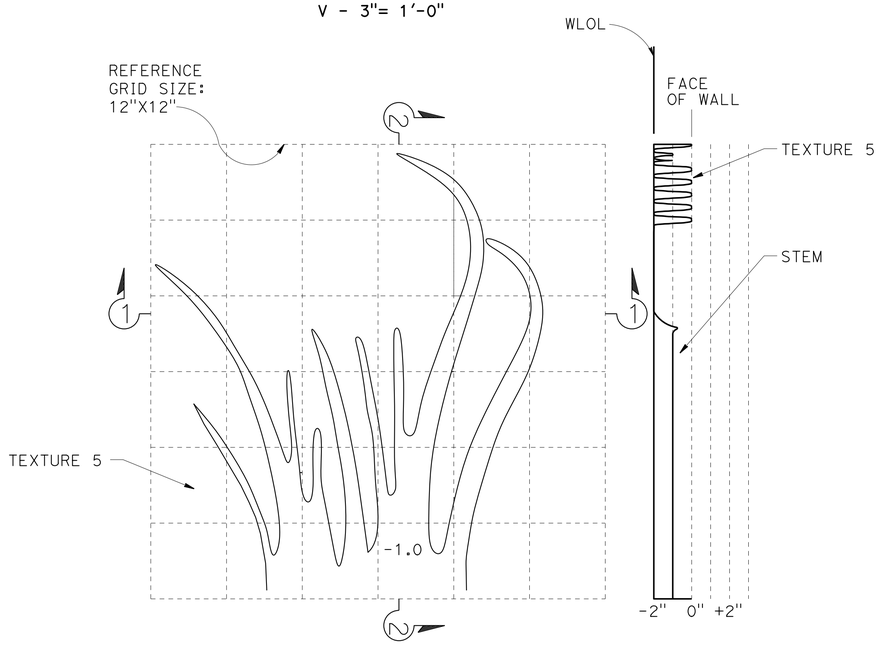

DETAIL B

1" = 1'-0"

SECTION 2

H - 3"= 1'-0"
V - 1"= 1'-0"

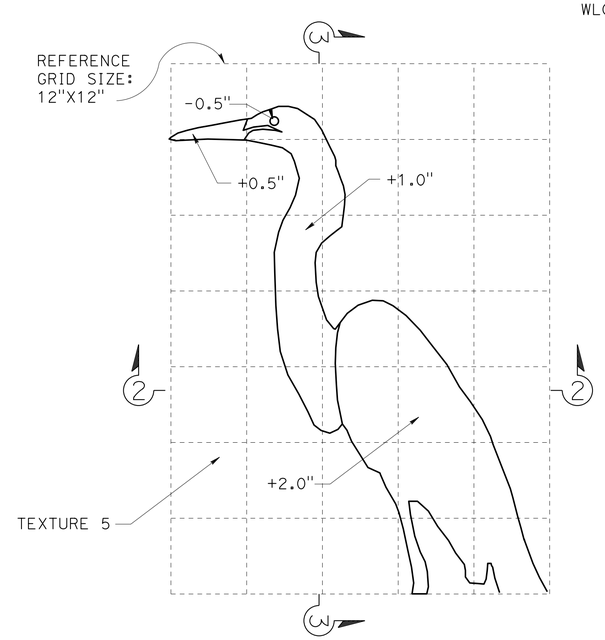

DETAIL C

1" = 1'-0"

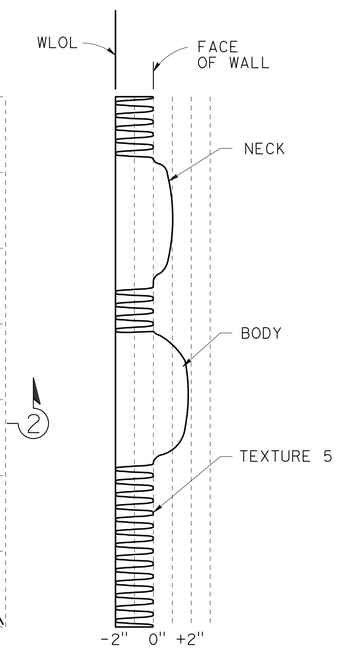

SECTION 3-3

H - 3"= 1'-0"
V - 1"= 1'-0"

DESIGN	BY J. Roberts	CHECKED I-Hong Sun	
DETAILS	BY J. Godett	CHECKED I-Hong Sun	
QUANTITIES	BY J. Godett	CHECKED I-Hong Sun	

STATE OF CALIFORNIA
DEPARTMENT OF TRANSPORTATION

DIVISION OF ENGINEERING SERVICES
STRUCTURE DESIGN
DESIGN BRANCH 19

BRIDGE NO. 55E0147
POST MILE 8.9

RETAINING WALL NO. 454
CONCRETE SURFACE TEXTURE NO. 8

STRUCTURES DESIGN DETAIL SHEET (ENGLISH) (REV. 09-01-10)

ORIGINAL SCALE IN INCHES FOR REDUCED PLANS 0 1 2 3

UNIT: 3621
PROJECT NUMBER & PHASE: 1200000078 - 1 CONTRACT NO.: 12-0C5601

DISREGARD PRINTS BEARING EARLIER REVISION DATES

REVISION DATES: 10-28-12 12-04-12 12-14-12 01-23-13

SHEET 23 OF 29

FILE => 55e-0147-rw454-u-arch_08.dgn

USERNAME => s121614 DATE PLOTTED => 24-APR-2013 TIME PLOTTED => 11:50

DIST	COUNTY	ROUTE	POST MILES TOTAL PROJECT	SHEET No.	TOTAL SHEETS
12	Ora	91	8.1/9.3,10.1	335	357

I-HONG SUN
LICENSED LANDSCAPE ARCHITECT

4-15-13
PLANS APPROVAL DATE

LICENSED LANDSCAPE ARCHITECT
I-HONG SUN No. 5464
Signature
12-31-14
Renewal Date
01-25-13
Date
STATE OF CALIFORNIA

The State of California or its officers or agents shall not be responsible for the accuracy or completeness of electronic copies of this plan sheet.

SECTION 1-1
H - 1"= 1'-0"
V - 3"= 1'-0"

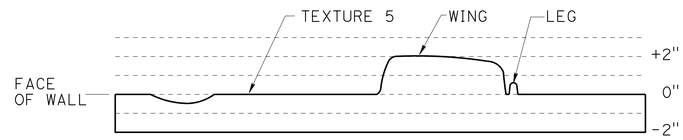

SECTION 3-3
H - 1"= 1'-0"
V - 3"= 1'-0"

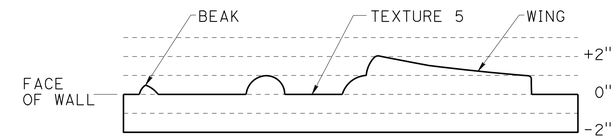

SECTION 5-5
H - 1"= 1'-0"
V - 3"= 1'-0"

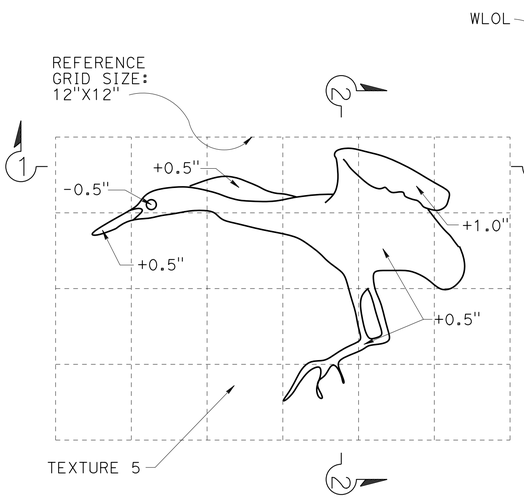

DETAIL D
1"= 1'-0"

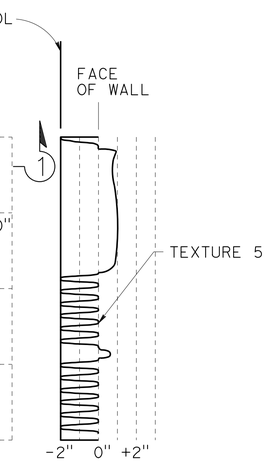

SECTION 2-2
H - 3"= 1'-0"
V - 1"= 1'-0"

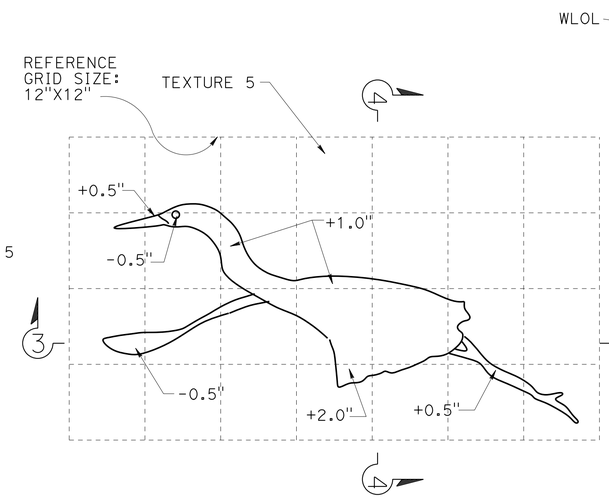

DETAIL E
1"= 1'-0"

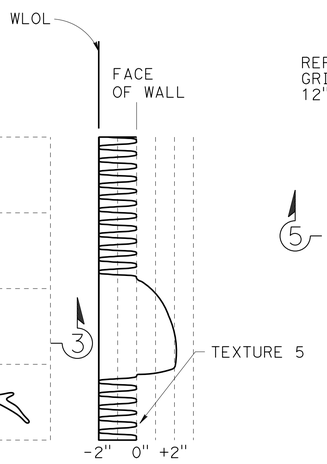

SECTION 4-4
H - 3"= 1'-0"
V - 1"= 1'-0"

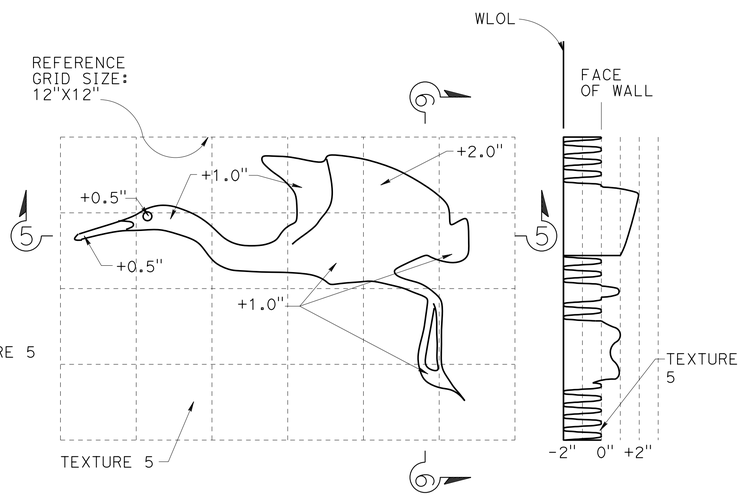

DETAIL F
1"= 1'-0"

SECTION 6-6
H - 3"= 1'-0"
V - 1"= 1'-0"

DESIGN	BY J. Roberts	CHECKED I-Hong Sun	
DETAILS	BY J. Godett	CHECKED I-Hong Sun	
QUANTITIES	BY J. Godett	CHECKED I-Hong Sun	

STATE OF CALIFORNIA
DEPARTMENT OF TRANSPORTATION

DIVISION OF ENGINEERING SERVICES
STRUCTURE DESIGN
DESIGN BRANCH 19

BRIDGE NO. 55E0147
POST MILE 8.9

RETAINING WALL NO. 454
CONCRETE SURFACE TEXTURE NO. 9

STRUCTURES DESIGN DETAIL SHEET (ENGLISH) (REV. 09-01-10)

ORIGINAL SCALE IN INCHES FOR REDUCED PLANS 0 1 2 3

UNIT: 3621
PROJECT NUMBER & PHASE: 1200000078 - 1 CONTRACT NO.: 12-0C5601

DISREGARD PRINTS BEARING EARLIER REVISION DATES

REVISION DATES: 10-26-12 12-04-12 12-14-12 01-23-13

SHEET 24 OF 29

FILE => 55e-0147-rw454-u-arch_09.dgn

USERNAME => s12161 4 DATE PLOTTED => 24-APR-2013 TIME PLOTTED => 11:50

DIST	COUNTY	ROUTE	POST MILES TOTAL PROJECT	SHEET No.	TOTAL SHEETS
12	Ora	91	8.1/9.3,10.1	336	357

I-HONG SUN
LICENSED LANDSCAPE ARCHITECT

4-15-13
PLANS APPROVAL DATE

LICENSED LANDSCAPE ARCHITECT
I-HONG SUN NO. 5464
Signature
12-31-14
Renewal Date
01-25-13
Date
STATE OF CALIFORNIA

The State of California or its officers or agents shall not be responsible for the accuracy or completeness of electronic copies of this plan sheet.

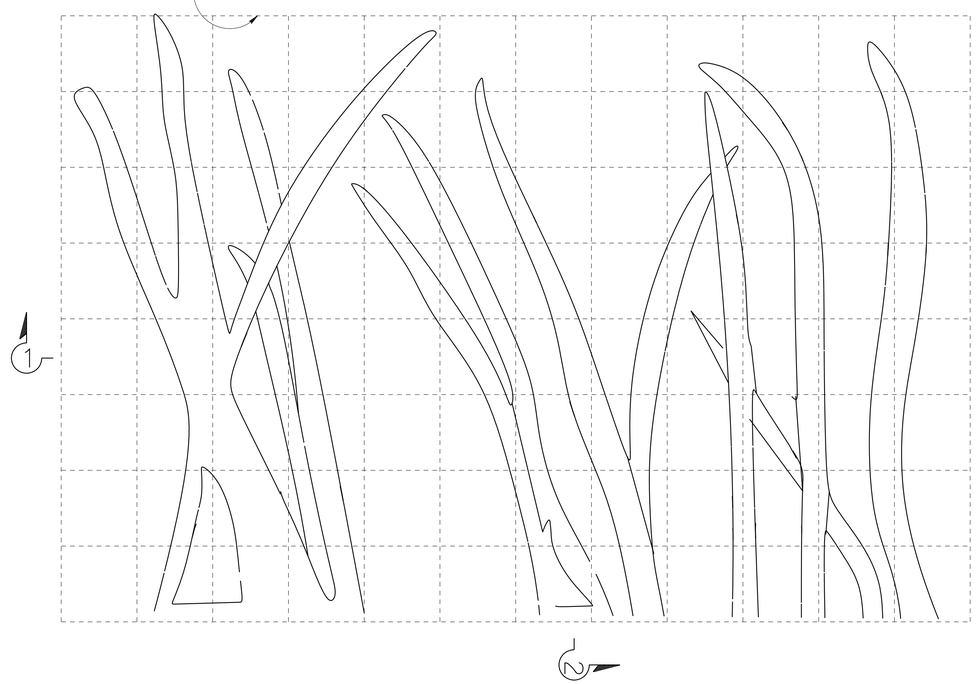

DETAIL G

1" = 1'-0"

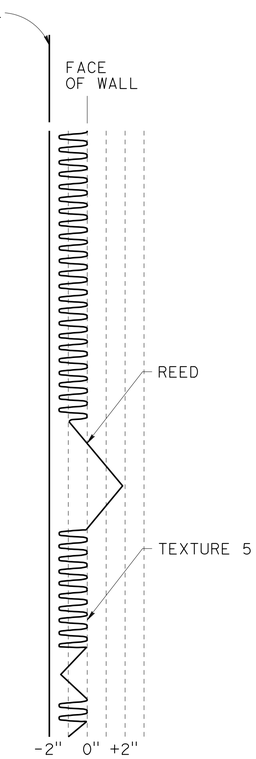

SECTION 2-2

H - 3"= 1'-0"
V - 1"= 1'-0"

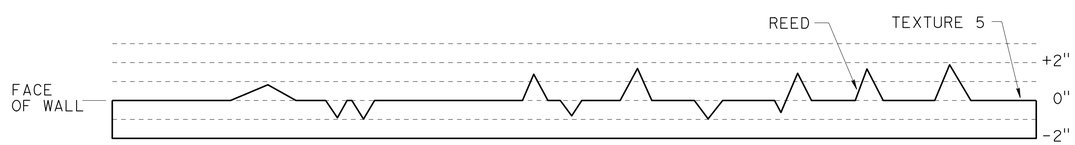

SECTION 1-1

H - 1"= 1'-0"
V - 3"= 1'-0"

DESIGN	BY J. Roberts	CHECKED I-Hong Sun	
DETAILS	BY J. Godett	CHECKED I-Hong Sun	
QUANTITIES	BY J. Godett	CHECKED I-Hong Sun	

STATE OF CALIFORNIA
DEPARTMENT OF TRANSPORTATION

DIVISION OF ENGINEERING SERVICES
STRUCTURE DESIGN
DESIGN BRANCH 19

BRIDGE NO. 55E0147
POST MILE 8.9

RETAINING WALL NO. 454
CONCRETE SURFACE TEXTURE NO. 10

STRUCTURES DESIGN DETAIL SHEET (ENGLISH) (REV. 09-01-10)

ORIGINAL SCALE IN INCHES FOR REDUCED PLANS 0 1 2 3

UNIT: 3621
PROJECT NUMBER & PHASE: 1200000078 - 1 CONTRACT NO.: 12-0C5601

DISREGARD PRINTS BEARING EARLIER REVISION DATES

REVISION DATES: 10-29-12 12-04-12 12-14-12 01-23-13

SHEET 25 OF 29

FILE => 55e-0147-rw454-u-arch_10.dgn

USERNAME => s132614 DATE PLOTTED => 24-APR-2013 TIME PLOTTED => 11:50

DIST	COUNTY	ROUTE	POST MILES TOTAL PROJECT	SHEET No.	TOTAL SHEETS
12	Ora	91	8.1/9.3,10.1	337	357

I-HONG SUN
LICENSED LANDSCAPE ARCHITECT

4-15-13
PLANS APPROVAL DATE

LICENSED LANDSCAPE ARCHITECT — I-HONG SUN No. 5464 — Signature — Renewal Date 12-31-14 — Date 01-25-13 — STATE OF CALIFORNIA

The State of California or its officers or agents shall not be responsible for the accuracy or completeness of electronic copies of this plan sheet.

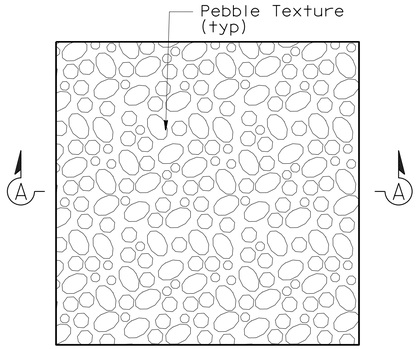

TEXTURE-1

1"=1'-0"

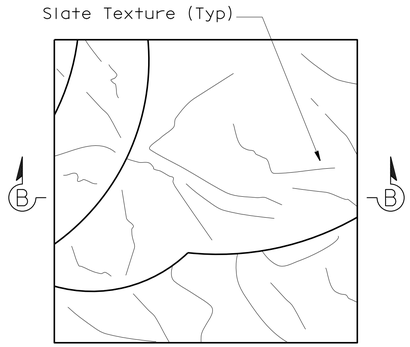

TEXTURE-2

1"=1'-0"

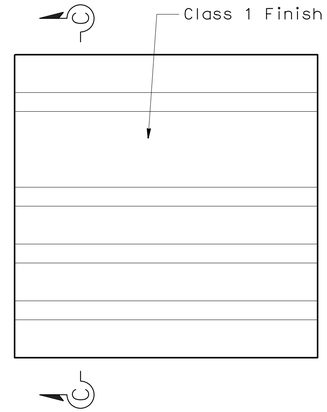

TEXTURE-3

1"=1'-0"

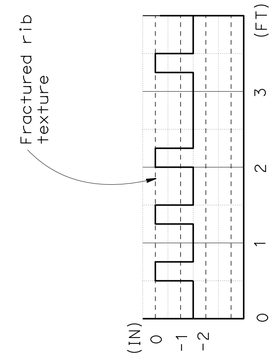

SECTION C-C

V - 1"=1'-0"
H - 1"=3"

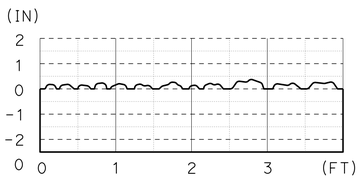

SECTION A-A

H - 1"=1'-0"
V - 1"=3"

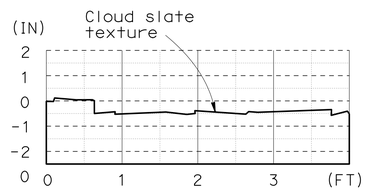

SECTION B-B

H - 1"=1'-0"
V - 1"=3"

NOTES:

FOR THE PEBBLE TEXTURE, THE SIZE OF THE PEBBLES: Max = 3" AND Min = 1"

FOR THE CLOUD STATE TEXTURE, Max RELIEF = 1½" AND Min = ¼"

FOR TEXTURE 6, Max LENGTH = 36" AND Min = 4"

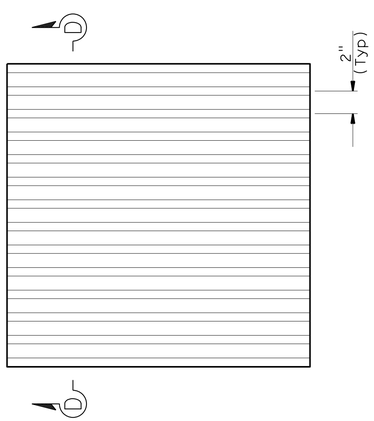

TEXTURE-4

1"=6"

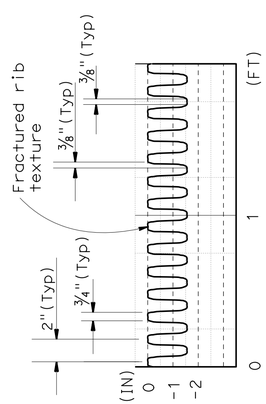

SECTION D-D

H - 1"=3"
V - 1"=6"

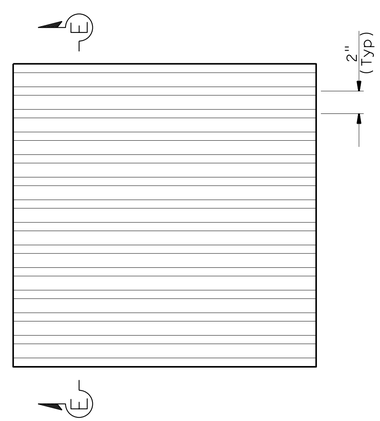

TEXTURE-5

1"=6"

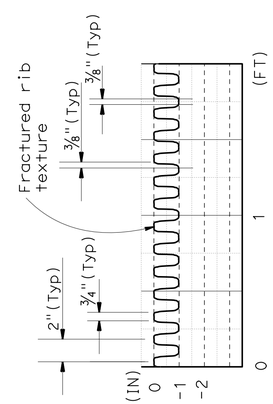

SECTION E-E

H - 1"=3"
V - 1"=6"

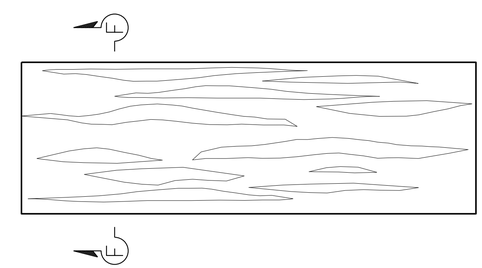

TEXTURE-6

1"=1'-0"

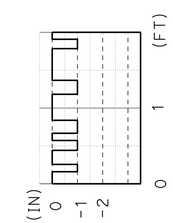

SECTION F-F

H - 1"=1'-0"
V - 1"=3"

DESIGN	BY J. Roberts	CHECKED I-Hong Sun	
DETAILS	BY J. Godett	CHECKED I-Hong Sun	
QUANTITIES	BY J. Godett	CHECKED I-Hong Sun	

STATE OF CALIFORNIA
DEPARTMENT OF TRANSPORTATION

DIVISION OF ENGINEERING SERVICES
STRUCTURE DESIGN
DESIGN BRANCH 19

BRIDGE NO. 55E0147
POST MILE 8.9

RETAINING WALL NO. 454
CONCRETE SURFACE TEXTURE NO. 11

STRUCTURES DESIGN DETAIL SHEET (ENGLISH) (REV. 09-01-10)

ORIGINAL SCALE IN INCHES FOR REDUCED PLANS 0 1 2 3

UNIT: 3621
PROJECT NUMBER & PHASE: 1200000078 - 1 CONTRACT NO.: 12-0C5601

DISREGARD PRINTS BEARING EARLIER REVISION DATES

REVISION DATES: 10-25-12 12-04-12 12-11-12 01-23-12

SHEET 26 OF 29

FILE => 55e-0147-rw454-u-arch_11.dgn

USERNAME => s121614 DATE PLOTTED => 24-APR-2013 TIME PLOTTED => 11:50

DIST	COUNTY	ROUTE	POST MILES TOTAL PROJECT	SHEET No.	TOTAL SHEETS
12	Ora	91	8.1/9.3,10.1	338	357

I-HONG SUN
LICENSED LANDSCAPE ARCHITECT

4-15-13
PLANS APPROVAL DATE

LICENSED LANDSCAPE ARCHITECT
I-HONG SUN NO. 5464
Signature
12-31-14
Renewal Date
01-25-13
Date
STATE OF CALIFORNIA

The State of California or its officers or agents shall not be responsible for the accuracy or completeness of electronic copies of this plan sheet.

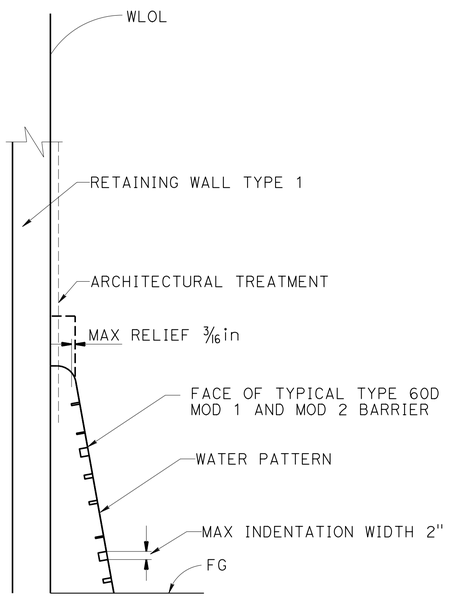

BARRIER SECTION A-A

NOT TO SCALE

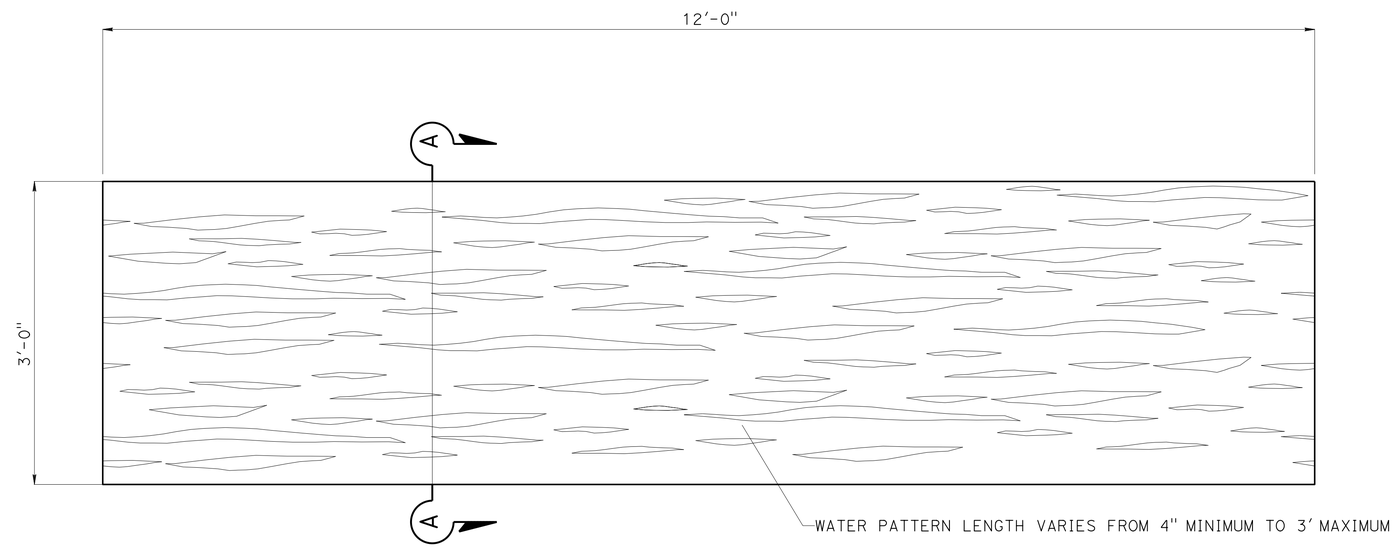

WATER PATTERN ON TYPE 60D (MOD 1 AND MOD 2) DETAIL ELEVATION

NOT TO SCALE

	BY	CHECKED
DESIGN	J. Roberts	I-Hong Sun
DETAILS	J. Godett	I-Hong Sun
QUANTITIES	J. Godett	I-Hong Sun

STATE OF CALIFORNIA
DEPARTMENT OF TRANSPORTATION

DIVISION OF ENGINEERING SERVICES
STRUCTURE DESIGN
DESIGN BRANCH 19

BRIDGE NO. 55E0147
POST MILE 8.9

RETAINING WALL NO. 454
CONCRETE SURFACE TEXTURE NO. 12

STRUCTURES DESIGN DETAIL SHEET (ENGLISH) (REV. 09-01-10)

ORIGINAL SCALE IN INCHES FOR REDUCED PLANS 0 1 2 3

UNIT: 3621
PROJECT NUMBER & PHASE: 1200000078 - 1 CONTRACT NO.: 12-0C5601

DISREGARD PRINTS BEARING EARLIER REVISION DATES

REVISION DATES: 12-04-12 04-09-13 01-25-13

SHEET 27 OF 29

FILE => 55e-0147-rw454-u-arch_12.dgn

USERNAME => DATE PLOTTED => 24-APR-2013 TIME PLOTTED => 12:41

DIST	COUNTY	ROUTE	POST MILES TOTAL PROJECT	SHEET No.	TOTAL SHEETS
12	Ora	91	8.1/9.3,10.1	339	357

Quanyan Liao 11-14-12
REGISTERED CIVIL ENGINEER DATE

4-15-13
PLANS APPROVAL DATE

REGISTERED PROFESSIONAL ENGINEER Quanyan Liao No. C68870 Exp. 9-30-13 CIVIL STATE OF CALIFORNIA

The State of California or its officers or agents shall not be responsible for the accuracy or completeness of electronic copies of this plan sheet.

This LOTB sheet was prepared in accordance with the Caltrans Soil & Rock Logging, Classification, & Presentation Manual (2010 Edition).

See 2010 Standard Plans A10F and A10G for Soil Legend, and A10H for Rock Legend.

BENCH MARK

Described by OCS 2002- Found 3¾" OCS Aluminum benchmark disk stamped "1L-64-82", set in the top of a 6 IN. by 6 IN. concrete post. Monument is located along the southerly side of the Santa Ana River, 0.25 miles northerly along the southerly Levee from the centerline of Tustin Avenue, 17.8 ft. southerly of the centerline of the bike trail and 1.5 ft. northerly from an OCS steel witness post . Monument is set level with the sidewalk.
Elevation: 252.454' (NAVD 88)
OCS control Index map: Q07-02
City/location: Anaheim

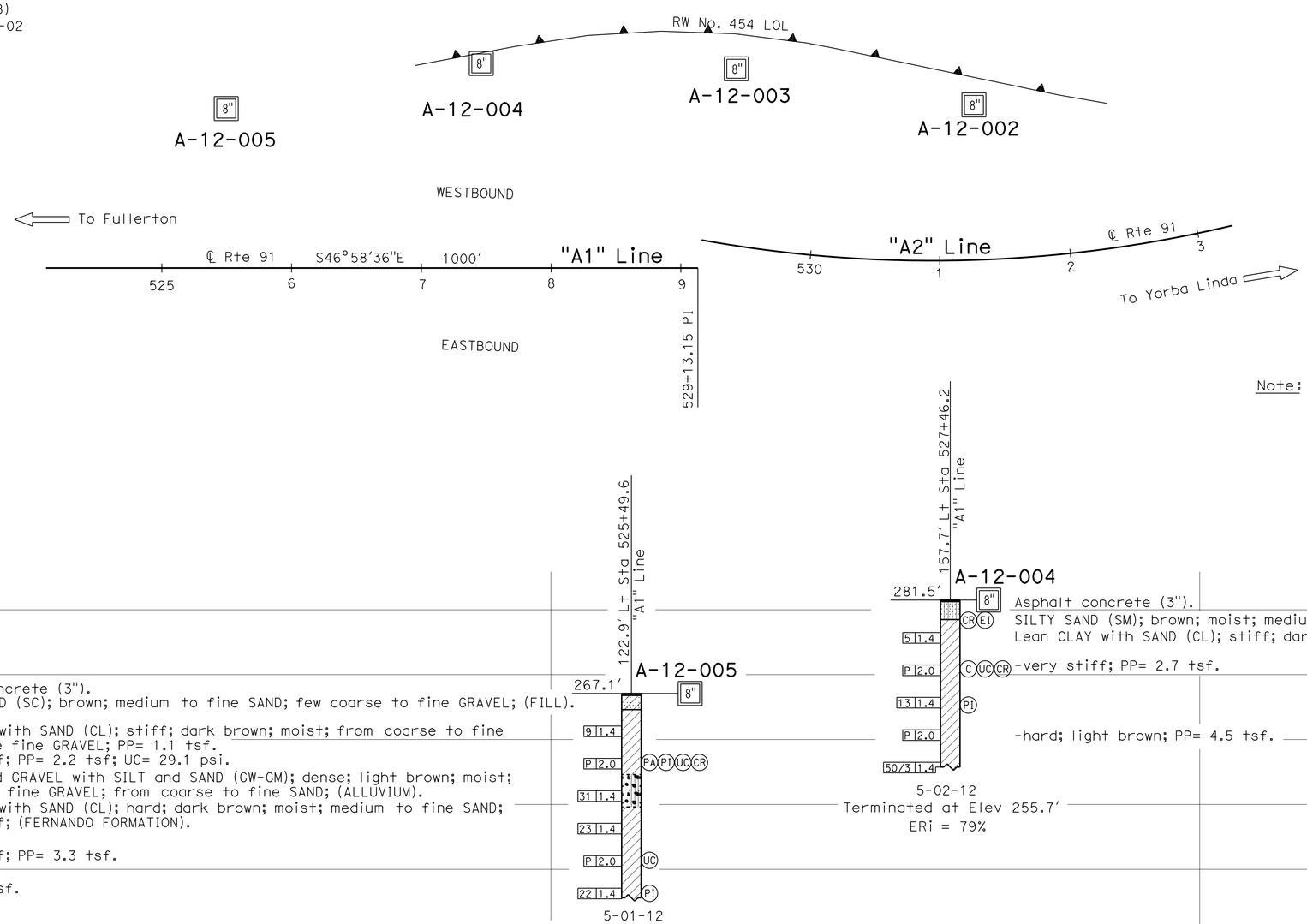

Note: No ground water encountered during field investigation.

PROFILE

Horiz: 1" = 40'
Vert: 1" = 10'

ENGINEERING SERVICES	MATERIALS AND GEOTECHNICAL SERVICES	STATE OF CALIFORNIA DEPARTMENT OF TRANSPORTATION	DIVISION OF ENGINEERING SERVICES STRUCTURE DESIGN DESIGN BRANCH 19	BRIDGE NO. 55E0147 POST MILE 8.9	RETAINING WALL NO. 454
FUNCTIONAL SUPERVISOR NAME: S. Karimi	DRAWN BY: F. Nguyen CHECKED BY: A. Mehrazar	FIELD INVESTIGATION BY: Q. Liao			LOG OF TEST BORINGS 1 OF 2

OGS CIVIL LOG OF TEST BORINGS SHEET

ORIGINAL SCALE IN INCHES FOR REDUCED PLANS 0 1 2 3

UNIT: 3643
PROJECT NUMBER & PHASE: 1200000078 - 1 CONTRACT NO.: 12-0C5601

DISREGARD PRINTS BEARING EARLIER REVISION DATES

REVISION DATES 10-16-12 12-11-12 11-14-12 SHEET 28 OF 29

FILE => 55e-0147-rw454-z-ltb01.dgn

USERNAME => s12614 DATE PLOTTED => 24-APR-2013 TIME PLOTTED => 11:51

DIST	COUNTY	ROUTE	POST MILES TOTAL PROJECT	SHEET No.	TOTAL SHEETS
12	Ora	91	8.1/9.3,10.1	340	357

Quanyan Liao 11-14-12
REGISTERED CIVIL ENGINEER DATE

4-15-13
PLANS APPROVAL DATE

REGISTERED PROFESSIONAL ENGINEER
Quanyan Liao
No. C68870
Exp. 9-30-13
CIVIL
STATE OF CALIFORNIA

The State of California or its officers or agents shall not be responsible for the accuracy or completeness of electronic copies of this plan sheet.

This LOTB sheet was prepared in accordance with the Caltrans Soil & Rock Logging, Classification, & Presentation Manual (2010 Edition).

See 2010 Standard Plans A10F and A10G for Soil Legend, and A10H for Rock Legend.

FOR PLAN VIEW, SEE
"LOG OF TEST BORINGS 1 OF 2"

Note: No ground water encountered during field investigation.

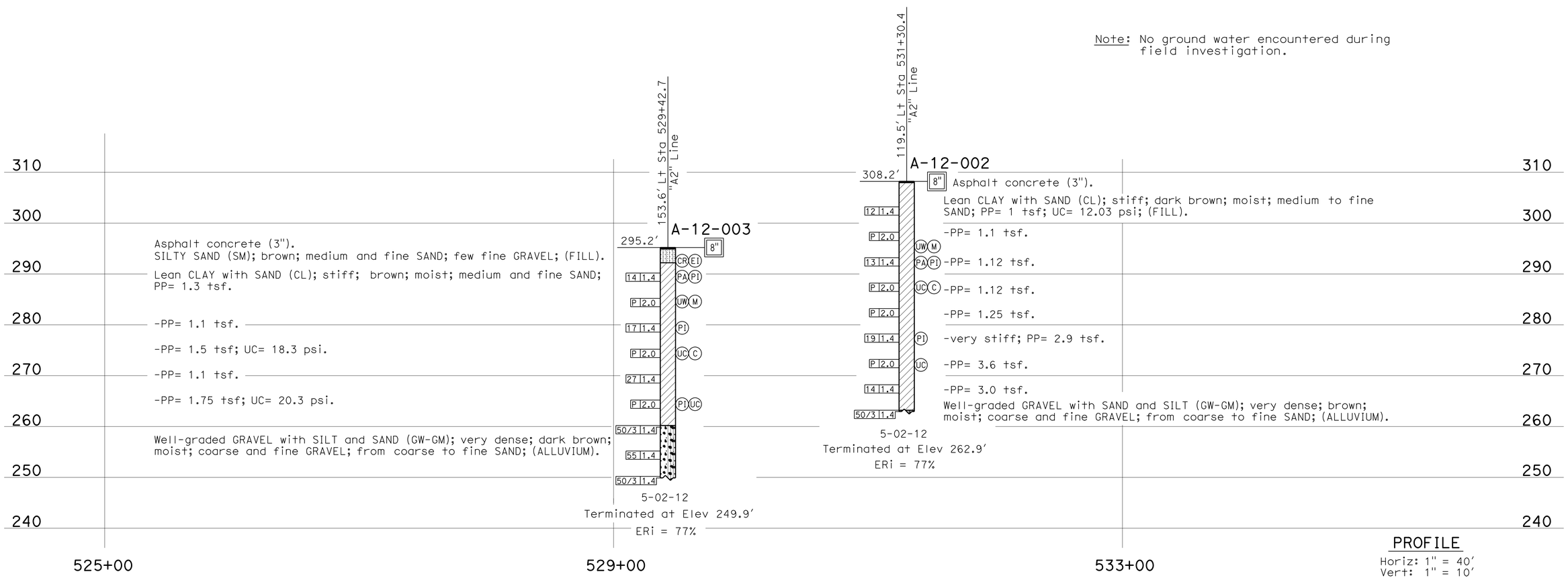

PROFILE
Horiz: 1" = 40'
Vert: 1" = 10'

ENGINEERING SERVICES	MATERIALS AND GEOTECHNICAL SERVICES	STATE OF CALIFORNIA DEPARTMENT OF TRANSPORTATION	DIVISION OF ENGINEERING SERVICES STRUCTURE DESIGN DESIGN BRANCH 19	BRIDGE NO. 55E0147 POST MILE 8.9	RETAINING WALL NO. 454 LOG OF TEST BORINGS 2 OF 2
FUNCTIONAL SUPERVISOR NAME: S. Karimi	DRAWN BY: F. Nguyen CHECKED BY: A. Mehrazar	FIELD INVESTIGATION BY: Q. Liao			

OGS CIVIL LOG OF TEST BORINGS SHEET

ORIGINAL SCALE IN INCHES FOR REDUCED PLANS 0 1 2 3

UNIT: 3643
PROJECT NUMBER & PHASE: 1200000078 - 1 CONTRACT NO.: 12-0C5601

DISREGARD PRINTS BEARING EARLIER REVISION DATES

REVISION DATES: 10-16-12 12-11-12 11-14-12 SHEET 29 OF 29

FILE => 55e-0147-rw454-z-ltb02.dgn

USERNAME => s121614 DATE PLOTTED => 24-APR-2013 TIME PLOTTED => 11:51

DIST	COUNTY	ROUTE	POST MILES TOTAL PROJECT	SHEET No.	TOTAL SHEETS
12	Ora	91	8.1/9.3,10.1	341	357

REGISTERED CIVIL ENGINEER 01-25-13 DATE

4-15-13
PLANS APPROVAL DATE

REGISTERED PROFESSIONAL ENGINEER WEI-KUNG HSIA No. C50210 Exp. 06-30-13 CIVIL STATE OF CALIFORNIA

The State of California or its officers or agents shall not be responsible for the accuracy or completeness of electronic copies of this plan sheet.

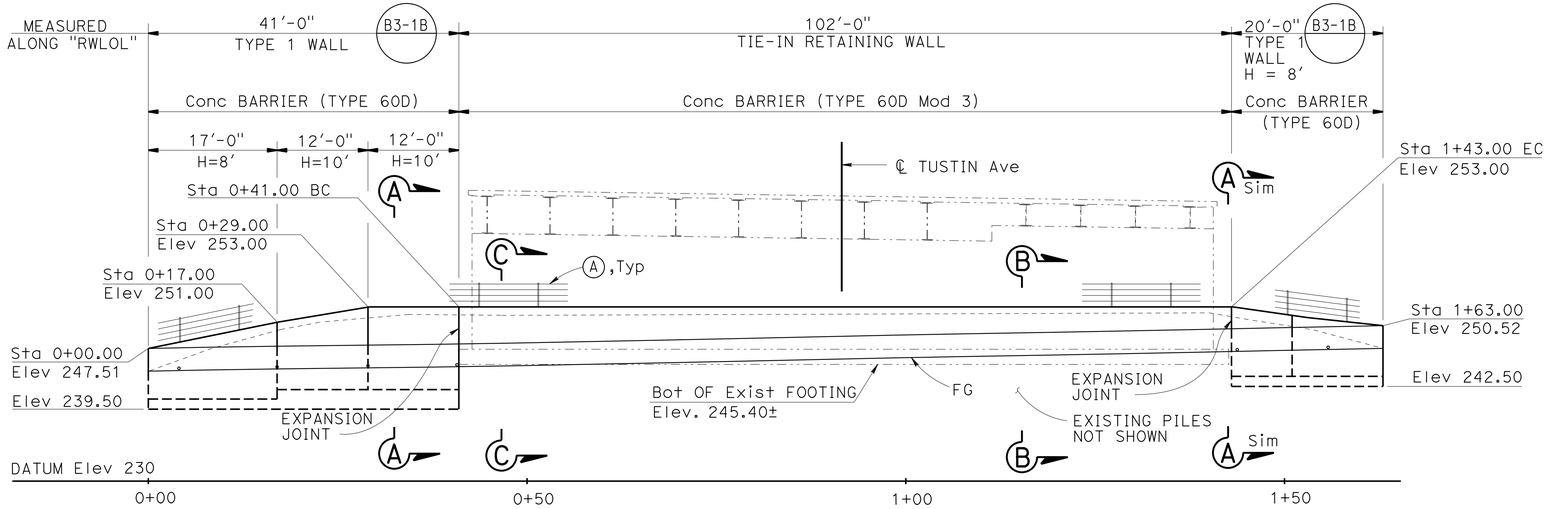

ELEVATION

1" = 10'

No.	R	Δ	T	L
2	2076.64'	02°48'51"	51.01'	102.00'
3	1200.02'	06°24'43"	67.22'	134.30
4	1999.84'	58°52'43"	1128.66'	2055.09'

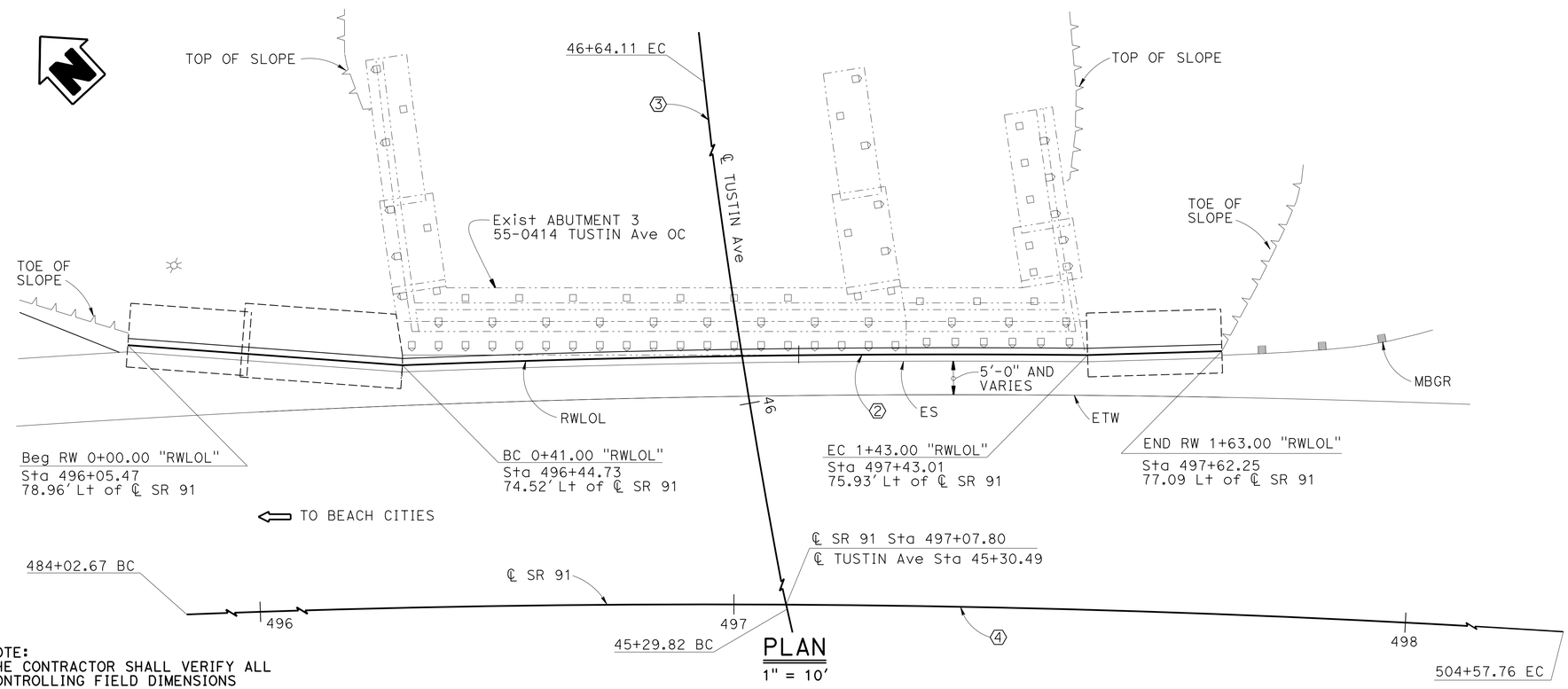

PLAN

1" = 10'

NOTE:
THE CONTRACTOR SHALL VERIFY ALL CONTROLLING FIELD DIMENSIONS BEFORE ORDERING OR FABRICATING ANY MATERIAL.

INDEX TO PLANS

NO.	SHEET NAME
1	GENERAL PLAN
2	FOUNDATION PLAN
3	TYPICAL SECTIONS
4	TIE-IN RETAINING WALL
5	LOG OF TEST BORINGS 1 OF 2
6	LOG OF TEST BORINGS 2 OF 2

NOTES

A CABLE RAILING B11-47 RSP

1. FOR SECTIONS A-A, B-B, AND C-C, SEE "TYPICAL SECTIONS" SHEET.
2. RELOCATE EXISTING FIBER OPTIC LINE, SEE "ROAD PLANS".
3. REMOVE EXISTING SLOPE PAVING. (BRIDGE REMOVAL PORTION).
4. FOR GENERAL NOTES, SEE "TIE-IN RETAINING WALL DETAILS" SHEET.

LEGEND

- NEW STRUCTURE
- EXISTING STRUCTURE
- TEMPORARY SHORING
- TRAFFIC DIRECTION
- BOTTOM OF FOOTING ELEVATION
- EXIST VERTICAL PILE
- EXIST BATTERED PILE (1:3± BATTER)

STANDARD PLANS DATED 2010

A10A	ABBREVIATIONS
A10B	ABBREVIATIONS
A10C	LINES AND SYMBOLS
A10D	LINES AND SYMBOLS
A10E	LINES AND SYMBOLS
A10F	LEGEND-SOIL (SHEET 1 OF 2)
A10G	LEGEND-SOIL (SHEET 2 OF 2)
A10H	LEGEND-ROCK
A76A	CONCRETE BARRIER TYPE 60
B0-3	BRIDGE DETAILS
RSP B3-1B	RETAINING WALL TYPE 1 (CASE 2)
RSP B3-5	RETAINING WALL DETAIL NO.1
B3-6	RETAINING WALL DETAIL NO.2
RSP B11-47	CABLE RAILING

STANDARD PLAN SHEET NO.

DETAIL NO.

QUANTITIES

BRIDGE REMOVAL (PORTION), LOCATION A	LUMP	SUM
STRUCTURE EXCAVATION (RETAINING WALL)	345	CY
STRUCTURE EXCAVATION (TYPE Y-1) (AERIALLY DEPOSITED LEAD)	14	CY
STRUCTURE BACKFILL (RETAINING WALL)	194	CY
STRUCTURAL CONCRETE, RETAINING WALL	101	CY
FRACTURED RIB TEXTURE	720	SQFT
DRILL AND BOND DOWEL	205	LF
BAR REINFORCING STEEL (RETAINING WALL)	11,518	LB
MINOR CONCRETE (GUTTER) (CY)	7	CY
CABLE RAILING	164	LF
CONCRETE BARRIER (TYPE 60D)	61	LF
CONCRETE BARRIER (TYPE 60D MODIFIED 3)	102	LF

BARTT GUNTER
DESIGN ENGINEER

	BY	CHECKED
DESIGN	BRIAN VO	DARYOUSH BALBAS
DETAILS	HENGAMEH MAHBOOBI	DARYOUSH BALBAS
QUANTITIES	BRIAN VO	DARYOUSH BALBAS

LOAD & RESISTANCE FACTOR DESIGN — LIVE LOADING: HL93 W/"LOW-BOY"; PERMIT DESIGN VEHICLE

	BY	CHECKED
LAYOUT	WEI-KUNG HSIA	DARYOUSH BALBAS
SPECIFICATIONS	THERESA NEDWICK	PLANS AND SPECS COMPARED THERESA NEDWICK

ORIGINAL SCALE IN INCHES FOR REDUCED PLANS 0 1 2 3

STATE OF CALIFORNIA
DEPARTMENT OF TRANSPORTATION

DIVISION OF ENGINEERING SERVICES
STRUCTURE DESIGN
DESIGN BRANCH 19

BRIDGE NO. 55E0148
POST MILE 8.4

RETAINING WALL NO. 497
GENERAL PLAN

UNIT: 3621
PROJECT NUMBER & PHASE: 1200000078 - 1 CONTRACT NO.: 12-0C5601

DISREGARD PRINTS BEARING EARLIER REVISION DATES → REVISION DATES 10/26/11 01/24/13 01/29/13

SHEET 1 OF 6

USERNAME => s121614 DATE PLOTTED => 24-APR-2013 TIME PLOTTED => 11:51

STRUCTURES DESIGN GENERAL PLAN SHEET (ENGLISH) (REV.09-01-10)

FILE => 55e-0148-rw497-a-gp01.dgn

DIST	COUNTY	ROUTE	POST MILES TOTAL PROJECT	SHEET No.	TOTAL SHEETS
12	Ora	91	8.1/9.3,10.1	342	357

REGISTERED CIVIL ENGINEER 01-25-13 DATE

4-15-13
PLANS APPROVAL DATE

REGISTERED PROFESSIONAL ENGINEER
WEI-KUNG HSIA
No. C5020
Exp. 06-30-13
CIVIL
STATE OF CALIFORNIA

The State of California or its officers or agents shall not be responsible for the accuracy or completeness of electronic copies of this plan sheet.

CURVE DATA				
No.	R	Δ	T	L
2	2076.64	02°51′08"	51.70	103.37
3	1200.02	06°24′43"	67.22	134.30
4	1999.84	58°52′43"	1128.66	2055.09

(A) STA. 46+07.13 "T1" LINE =
STA. 0+91.56 "RWLOL"

(B) STA. 45+30.49 "T1" LINE =
STA. 497+07.80 "A1" LINE

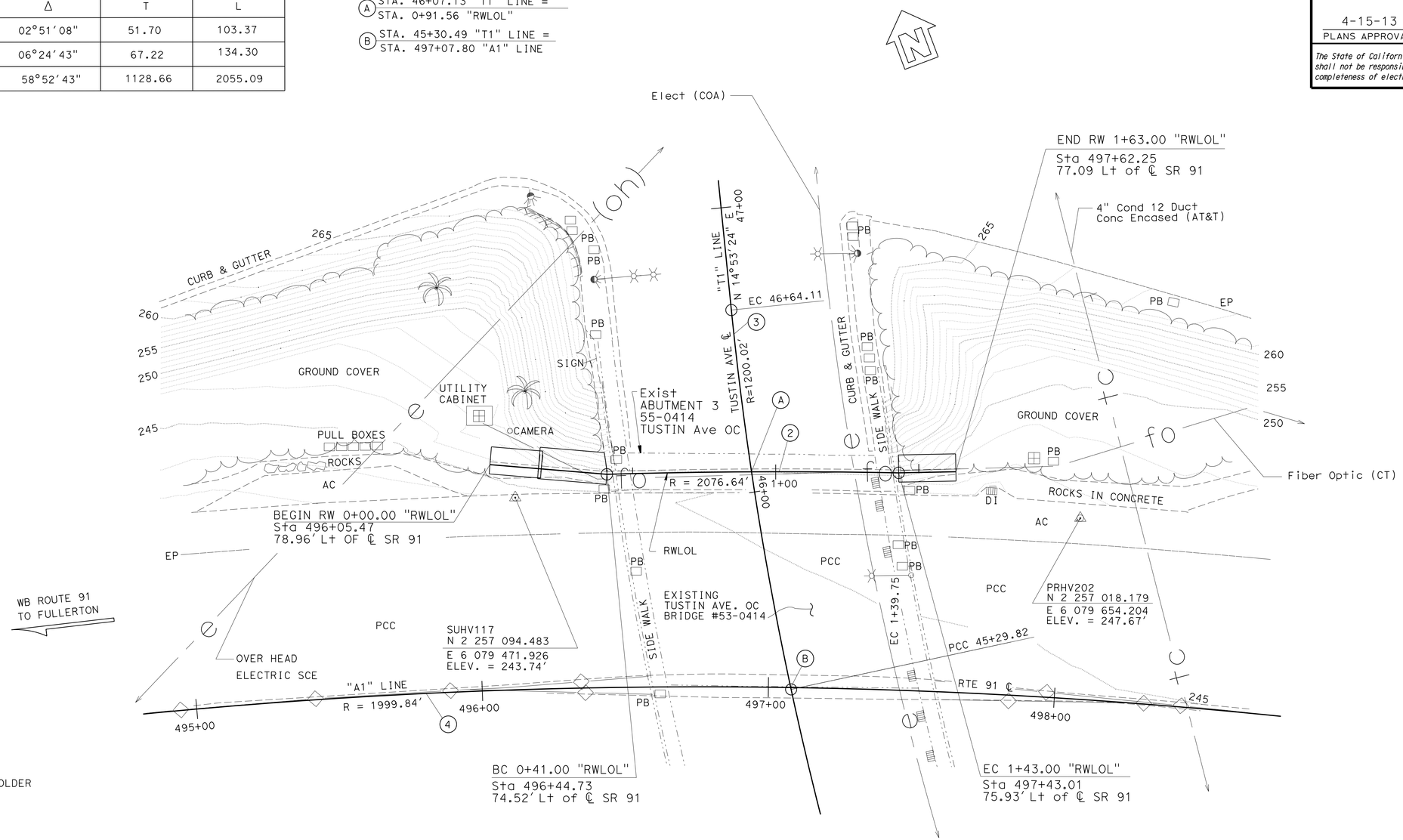

SURVEY CONTROL

PRHV202
FD. PK&TIN ON AC SHOLDER
63.22 FT Lt. Rte 91
Sta. 498+05.03
N 2 257 018.179
E 6 079 654.204
ELEV. = 247.67′

SUHV117
FD. PK&TIN ON AC SHOLDER
67.14 FT Lt. Rte 91
Sta. 496+13.62
N 2 257 094.483
E 6 079 471.926
ELEV. = 243.74′

NOTES:

UNDERGROUND UTILITIES AS SHOWN ARE APPROXIMATE

PRELIMINARY INVESTIGATION SECTION

SCALE 1"=20′	VERT.DATUM NAVD 88	PHOTOGRAMMETRY AS OF: X		
	HORZ.DATUM NAD 83 (1991.35)	SURVEYED	BY C.STEWART / T.PHUNG	CHECKED BY C. STEWART 12/2011
ALIGNMENT TIES Dist. Traverse Sheet		DRAFTED	BY S. ABASSY 01/2012	CHECKED BY S. ALIVIO 01/2012

DESIGN	BY BRIAN VO	CHECKED DARYOUSH BALBAS
DETAILS	BY HENGAMEH MAHBOOBI	CHECKED DARYOUSH BALBAS
QUANTITIES	BY BRIAN VO	CHECKED DARYOUSH BALBAS

STATE OF CALIFORNIA
DEPARTMENT OF TRANSPORTATION

DIVISION OF ENGINEERING SERVICES
STRUCTURE DESIGN
DESIGN BRANCH 19

BRIDGE NO. 55E0148
POST MILE 8.40

RETAINING WALL NO. 497
FOUNDATION PLAN

STRUCTURES FOUNDATION PLAN SHEET (ENGLISH) (REV. 09-01-10)

ORIGINAL SCALE IN INCHES FOR REDUCED PLANS 0 1 2 3

UNIT: 3647
PROJECT NUMBER & PHASE: 1200000078 - 1 CONTRACT NO.: 12-0C5601

DISREGARD PRINTS BEARING EARLIER REVISION DATES

REVISION DATES 01/18/12 12/17/12 01/23/13

SHEET 2 OF 6

FILE => 55e-0148-rw497-e-fdp101.dgn

DIST	COUNTY	ROUTE	POST MILES TOTAL PROJECT	SHEET No.	TOTAL SHEETS
12	Ora	91	8.1/9.3,10.1	343	357

REGISTERED CIVIL ENGINEER 01-25-13 DATE

4-15-13
PLANS APPROVAL DATE

REGISTERED PROFESSIONAL ENGINEER WEI-KUNG HSIA No. C50210 Exp. 06-30-13 CIVIL STATE OF CALIFORNIA

The State of California or its officers or agents shall not be responsible for the accuracy or completeness of electronic copies of this plan sheet.

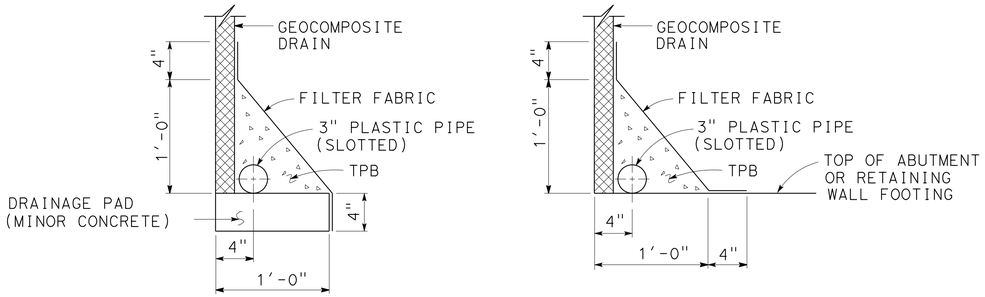

WITHOUT FOOTING

WITH FOOTING

DRAINAGE DETAILS

1½" = 1'-0"

NOTES:

(A) CABLE RAILING (B11-47) RSP

(B) CONCRETE GUTTER (B3-6)

(C) CONCRETE GUTTER (Mod), (B3-6) SEE "TIE-IN RETAINING WALL" SHEET.

(D) CONCRETE BARRIER (TYPE 60D) (A76A)

(E) EXISTING ABUTMENT 3, 55-0414 TUSTIN Ave OC.

(F) FOR DIMENSIONS AND REINFORCEMENT, SEE "TIE-IN RETAINING WALL" SHEET.

(G) CONCRETE BARRIER (TYPE 60D MODIFIED 3)

LEGEND

NEW STRUCTURE

EXISTING STRUCTURE

STRUCTURE EXCAVATION (RETAINING WALL)

STRUCTURE BACKFILL (RETAINING WALL)

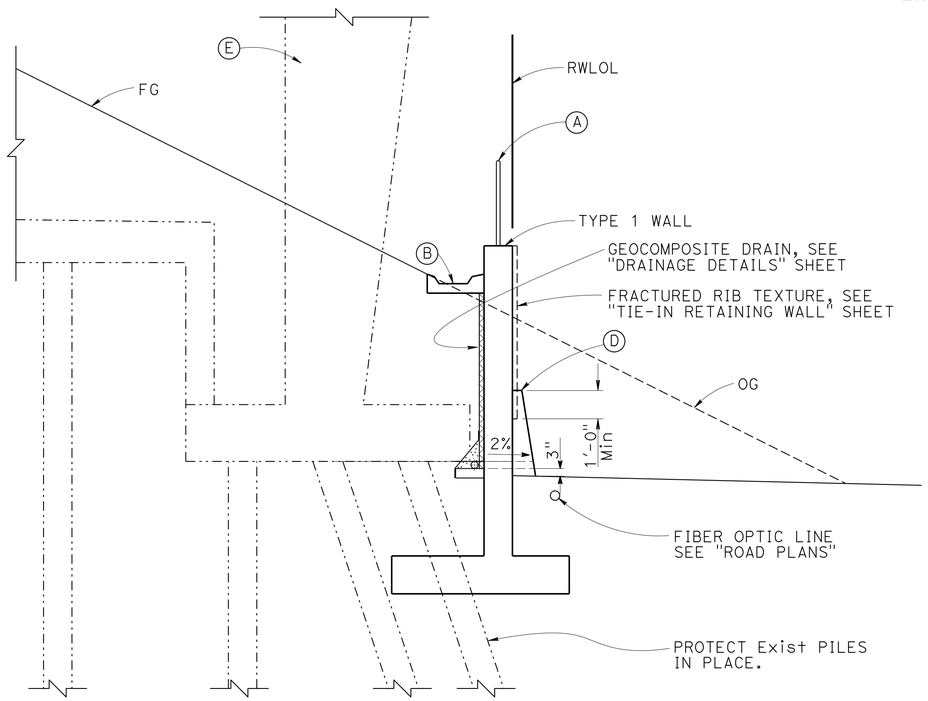

SECTION A-A

⅜" = 1'-0"

(RWLOL Sta 0+00 TO Sta 0+41
Sta 1+43 TO Sta 1+63)

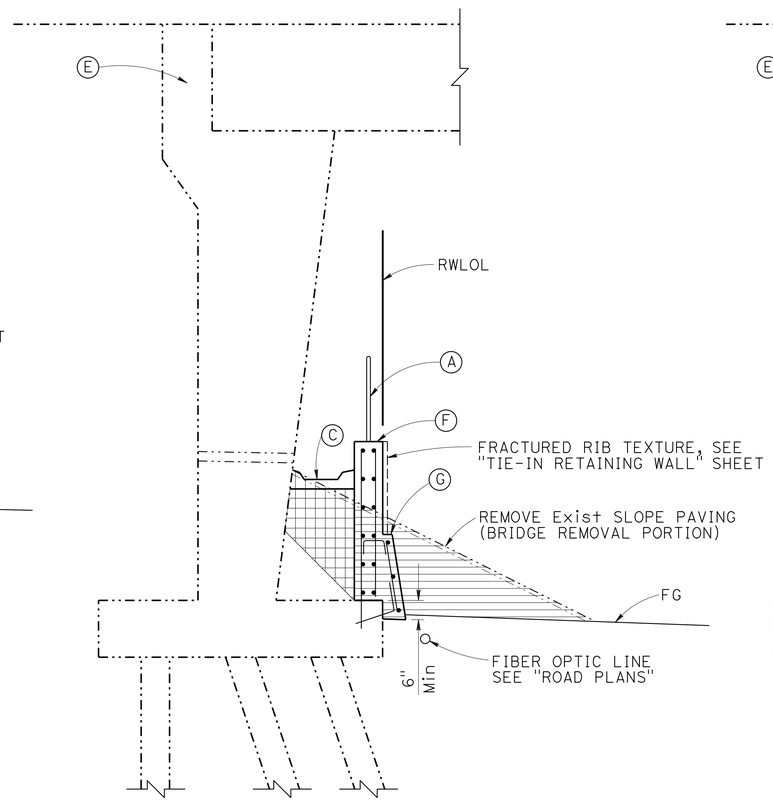

SECTION B-B

⅜" = 1'-0"

(RWLOL Sta 0+73± TO Sta 1+43)

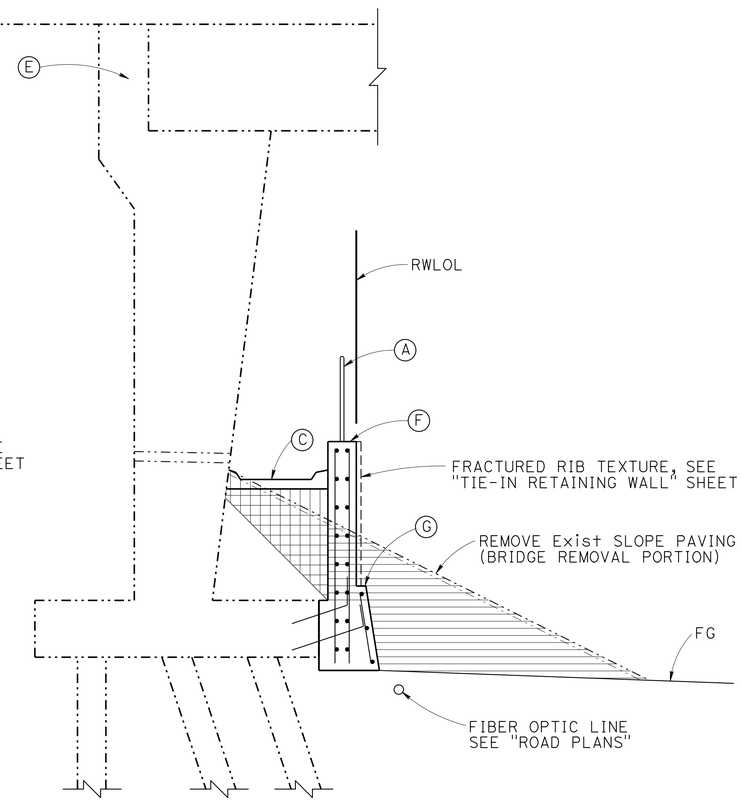

SECTION C-C

⅜" = 1'-0"

(RWLOL Sta 0+41 TO Sta 0+73±)

NOTE:
THE CONTRACTOR SHALL VERIFY ALL CONTROLLING FIELD DIMENSIONS BEFORE ORDERING OR FABRICATING ANY MATERIAL.

	BY	CHECKED
DESIGN	Brian Vo	Daryoush Balbas
DETAILS	Hengameh Mahboobi	Daryoush Balbas
QUANTITIES	Brian Vo	Daryoush Balbas

STATE OF CALIFORNIA
DEPARTMENT OF TRANSPORTATION

DIVISION OF ENGINEERING SERVICES
STRUCTURE DESIGN
DESIGN BRANCH 19

BRIDGE NO. 55E0148
POST MILE 8.4

RETAINING WALL NO. 497
TYPICAL SECTIONS

STRUCTURES DESIGN DETAIL SHEET (ENGLISH) (REV. 09-01-10)

ORIGINAL SCALE IN INCHES FOR REDUCED PLANS 0 1 2 3

UNIT: 3621
PROJECT NUMBER & PHASE: 1200000078 - 1 CONTRACT NO.: 12-0C5601

DISREGARD PRINTS BEARING EARLIER REVISION DATES

REVISION DATES: 10/26/11 01/24/13 01/29/13

SHEET 3 OF 6

FILE => 55e-0148-rw497-k-ts01.dgn

USERNAME => s127614 DATE PLOTTED => 24-APR-2013 TIME PLOTTED => 11:51

DIST	COUNTY	ROUTE	POST MILES TOTAL PROJECT	SHEET No.	TOTAL SHEETS
12	Ora	91	8.1/9.3,10.1	344	357

REGISTERED CIVIL ENGINEER 01-25-13 DATE

4-15-13
PLANS APPROVAL DATE

REGISTERED PROFESSIONAL ENGINEER WEI-KUNG HSIA No. C50210 Exp. 06-30-13 CIVIL STATE OF CALIFORNIA

The State of California or its officers or agents shall not be responsible for the accuracy or completeness of electronic copies of this plan sheet.

NOTES:

(A) CABLE RAILING B11-47 RSP

(B) CONCRETE GUTTER B3-6 (Mod)

LEGEND

STRUCTURE EXACTION (RETAINING WALL)

STRUCTURE BACKFILL (RETAINING WALL)

STRUCTURE EXACTION (TYPE Y-1) (AERIAL DEPOSITION LEAD)

LEGEND

NEW STRUCTURE

EXISTING STRUCTURE

GENERAL NOTES
LOAD AND RESISTANCE FACTOR DESIGN

DESIGN: AASHTO LRFD BRIDGE SPECIFICATIONS 4TH EDITION AND CALTRANS AMENDMENTS.

LOADING: VARIABLE SLOPE WITH NO LIVE LOAD

RETAINED SOIL BEHIND WALL: γ = 120 pcf, ϕ = 34°

REINFORCED CONCRETE: ASTM A706
f_y = 60 ksi (YIELD STRENGTH OF REINFORCEMENT)
$f'c$ = 3600 psi (MINIMUM CONCRETE STRENGTH)

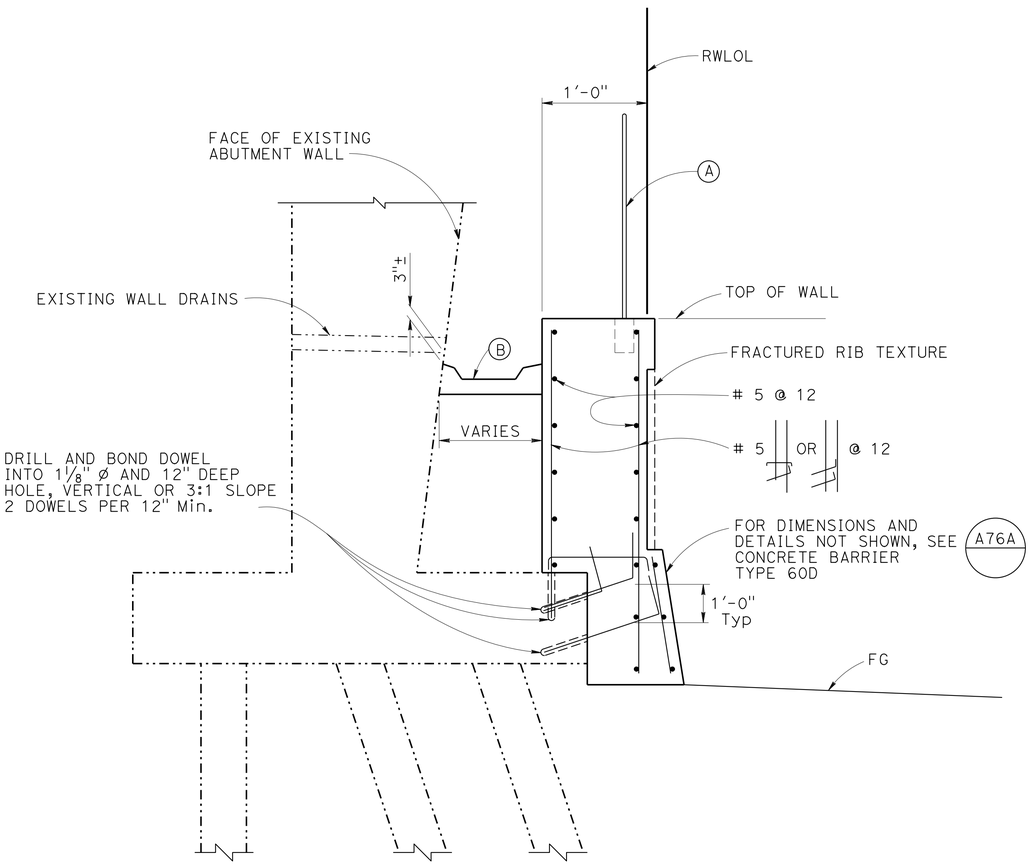

TIE-IN RETAINING WALL

NO SCALE

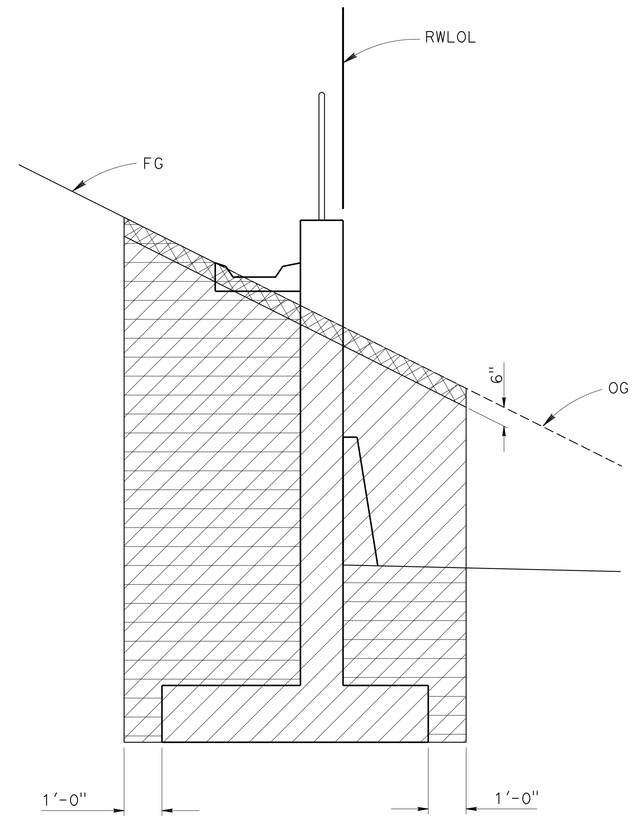

LIMITS OF PAYMENT FOR STRUCTURE EXCAVATION AND BACKFILL

NO SCALE

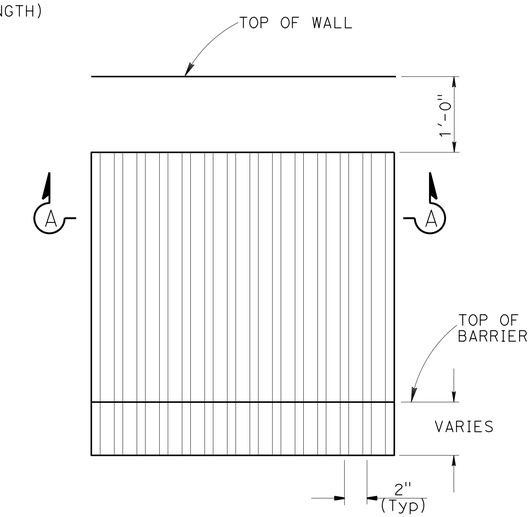

FRACTURED RIB TEXTURE

NO SCALE

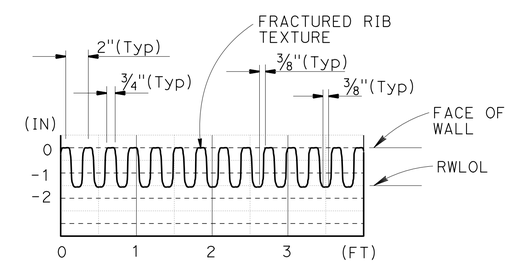

SECTION A-A

H - 1"=1'-0"
V - 1"=3"

NOTE:
THE CONTRACTOR SHALL VERIFY ALL CONTROLLING FIELD DIMENSIONS BEFORE ORDERING OR FABRICATING ANY MATERIAL.

	BY	CHECKED
DESIGN	BRIAN VO	DARYOUSH BALBAS
DETAILS	HENGAMEH MAHBOOBI	DARYOUSH BALBAS
QUANTITIES	BRIAN VO	DARYOUSH BALBAS

STATE OF CALIFORNIA
DEPARTMENT OF TRANSPORTATION

DIVISION OF ENGINEERING SERVICES
STRUCTURE DESIGN
DESIGN BRANCH 19

BRIDGE NO. 55E0148
POST MILE 8.4

RETAINING WALL NO. 497
TIE-IN RETAINING WALL

STRUCTURES DESIGN DETAIL SHEET (ENGLISH) (REV. 09-01-10)

ORIGINAL SCALE IN INCHES FOR REDUCED PLANS 0 1 2 3

UNIT: 3621
PROJECT NUMBER & PHASE: 1200000078 - 1 CONTRACT NO.: 12-0C5601

DISREGARD PRINTS BEARING EARLIER REVISION DATES

REVISION DATES 10/28/11 01/23/13 01/24/13

SHEET 4 OF 6

FILE => 55e-0148-rw497-k-ts02.dgn

USERNAME => s121614 DATE PLOTTED => 24-APR-2013 TIME PLOTTED => 11:51

DIST	COUNTY	ROUTE	POST MILES TOTAL PROJECT	SHEET No.	TOTAL SHEETS
12	Ora	91	8.1/9.3,10.1	345	357

Quanyan Liao 11-14-12
REGISTERED CIVIL ENGINEER DATE

4-15-13
PLANS APPROVAL DATE

REGISTERED PROFESSIONAL ENGINEER
Quanyan Liao
No. C68870
Exp. 9-30-13
CIVIL
STATE OF CALIFORNIA

The State of California or its officers or agents shall not be responsible for the accuracy or completeness of electronic copies of this plan sheet.

This LOTB sheet was prepared in accordance with the Caltrans Soil & Rock Logging, Classification, & Presentation Manual (2010 Edition).

See 2010 Standard Plans A10F and A10G for Soil Legend, and A10H for Rock Legend.

BENCH MARK

Described by OCS 2002- Found 3¾" OCS Aluminum benchmark disk stamped "1L-64-82", set in the top of a 6 IN. by 6 IN. concrete post. Monument is located along the southerly side of the Santa Ana River, 0.25 miles northerly along the southerly Levee from the centerline of Tustin Avenue, 17.8 ft. southerly of the centerline of the bike trail and 1.5 ft. northerly from an OCS steel witness post . Monument is set level with the sidewalk.
Elevation: 252.454′ (NAVD 88)
OCS control Index map: Q07-02
City/location: Anaheim

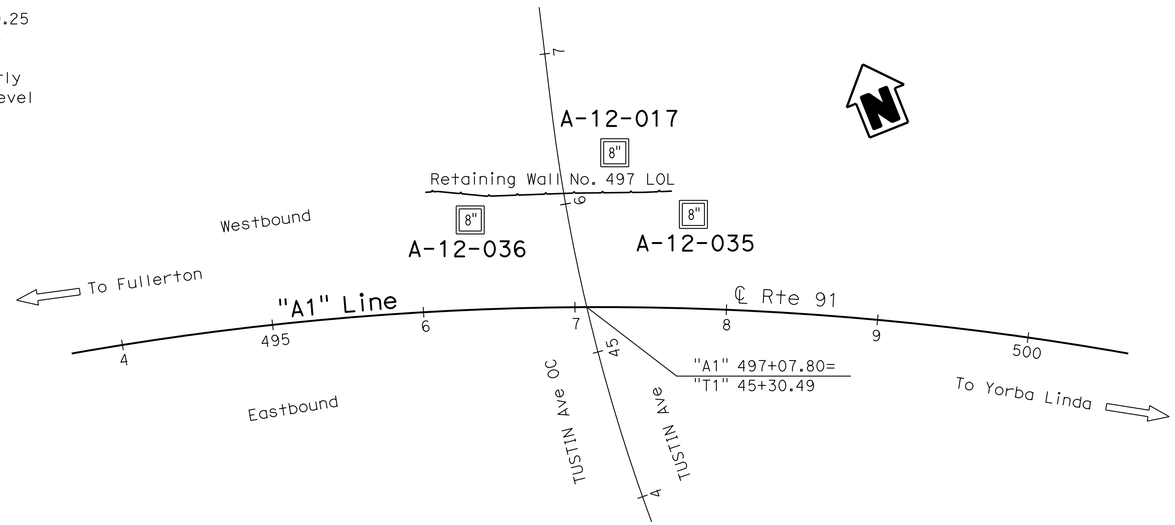

PLAN
1" = 50′

Note: No ground water encountered during field investigation.

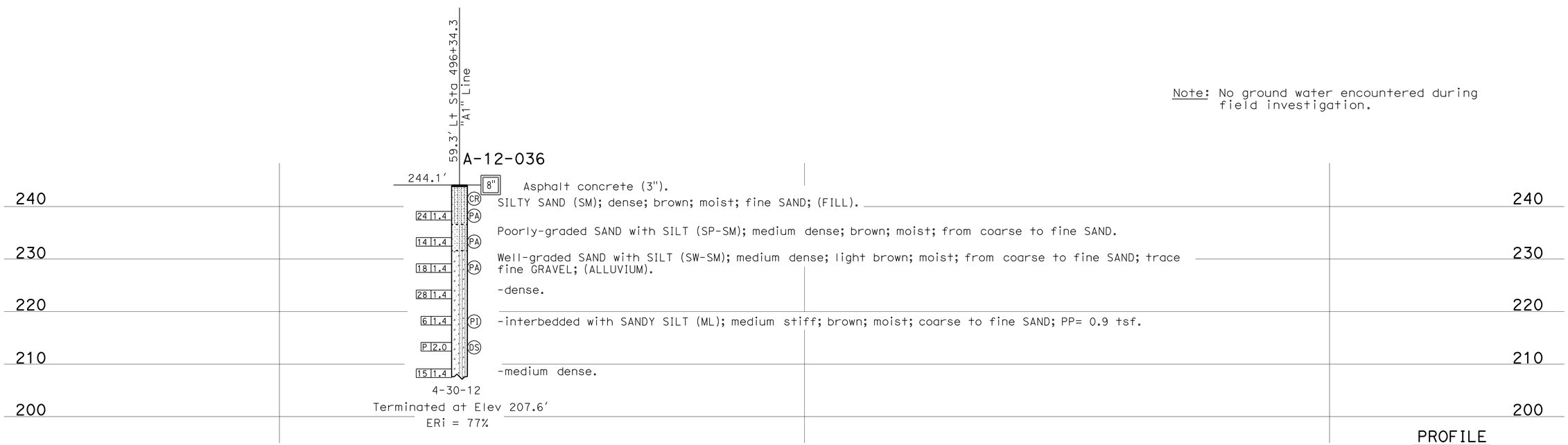

PROFILE
Horiz: 1" = 10′
Vert: 1" = 10′

ENGINEERING SERVICES	MATERIALS AND GEOTECHNICAL SERVICES	STATE OF CALIFORNIA DEPARTMENT OF TRANSPORTATION	DIVISION OF ENGINEERING SERVICES STRUCTURE DESIGN DESIGN BRANCH 19	BRIDGE NO. 55E0148 POST MILE 8.40	RETAINING WALL NO. 497 LOG OF TEST BORINGS 1 OF 2
FUNCTIONAL SUPERVISOR NAME: S. Karimi	DRAWN BY: F. Nguyen CHECKED BY: A. Mehrazar	FIELD INVESTIGATION BY: Q. Liao			

OGS CIVIL LOG OF TEST BORINGS SHEET

ORIGINAL SCALE IN INCHES FOR REDUCED PLANS 0 1 2 3

UNIT: 3643
PROJECT NUMBER & PHASE: 1200000078 - 1 CONTRACT NO.: 12-0C5601

DISREGARD PRINTS BEARING EARLIER REVISION DATES → REVISION DATES 10-16-12 11-06-12 11-08-12 11-14-12 SHEET 5 OF 6

FILE => 55e-0148-rw497-z-l1tb01.dgn

USERNAME => s12614 DATE PLOTTED => 24-APR-2013 TIME PLOTTED => 11:51

DIST	COUNTY	ROUTE	POST MILES TOTAL PROJECT	SHEET No.	TOTAL SHEETS
12	Ora	91	8.1/9.3,10.1	346	357

Quanyan Liao 11-14-12
REGISTERED CIVIL ENGINEER DATE

4-15-13
PLANS APPROVAL DATE

REGISTERED PROFESSIONAL ENGINEER
Quanyan Liao
No. C68870
Exp. 9-30-13
CIVIL
STATE OF CALIFORNIA

The State of California or its officers or agents shall not be responsible for the accuracy or completeness of electronic copies of this plan sheet.

This LOTB sheet was prepared in accordance with the Caltrans Soil & Rock Logging, Classification, & Presentation Manual (2010 Edition).

See 2010 Standard Plans A10F and A10G for Soil Legend, and A10H for Rock Legend.

FOR PLAN VIEW, SEE
"LOG OF TEST BORINGS 1 OF 2"

Note: No ground water encountered during field investigation.

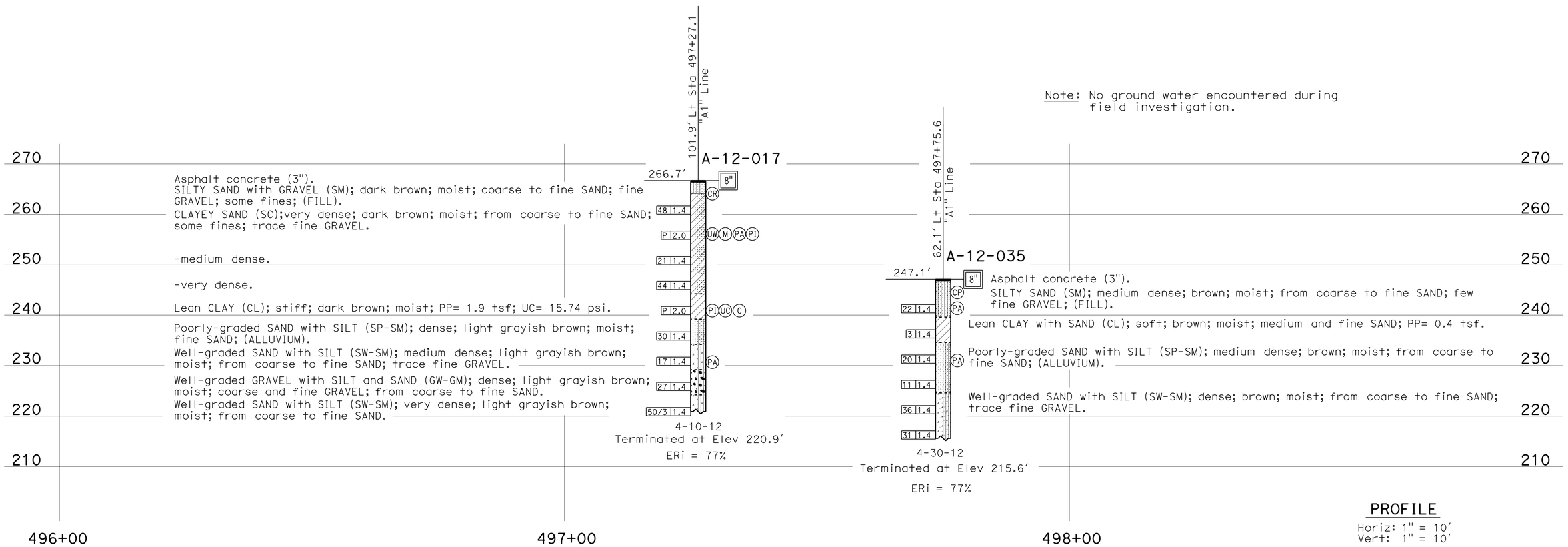

PROFILE
Horiz: 1" = 10'
Vert: 1" = 10'

ENGINEERING SERVICES	MATERIALS AND GEOTECHNICAL SERVICES	STATE OF CALIFORNIA DEPARTMENT OF TRANSPORTATION	DIVISION OF ENGINEERING SERVICES STRUCTURE DESIGN DESIGN BRANCH 19	BRIDGE NO. 55E0148 POST MILE 8.40	RETAINING WALL NO. 497 LOG OF TEST BORINGS 2 OF 2
FUNCTIONAL SUPERVISOR NAME: S. Karimi	DRAWN BY: F. Nguyen CHECKED BY: A. Mehrazar	FIELD INVESTIGATION BY: Q. Liao			

OGS CIVIL LOG OF TEST BORINGS SHEET

ORIGINAL SCALE IN INCHES FOR REDUCED PLANS 0 1 2 3

UNIT: 3643
PROJECT NUMBER & PHASE: 1200000078 - 1 CONTRACT NO.: 12-0C5601

DISREGARD PRINTS BEARING EARLIER REVISION DATES

REVISION DATES: 10-16-12 11-06-12 11-08-12 11-14-12

SHEET 6 OF 6

FILE => 55e-0148-rw497-z-l1tb02.dgn

USERNAME => s12614 DATE PLOTTED => 24-APR-2013 TIME PLOTTED => 11:51

DIST	COUNTY	ROUTE	POST MILES TOTAL PROJECT	SHEET No.	TOTAL SHEETS
12	Ora	91	8.1/9.3,10.1	347	357

REGISTERED CIVIL ENGINEER 01-25-13 DATE

4-15-13
PLANS APPROVAL DATE

REGISTERED PROFESSIONAL ENGINEER WEI-KUNG HSIA No. C50210 Exp. 06-30-13 CIVIL STATE OF CALIFORNIA

The State of California or its officers or agents shall not be responsible for the accuracy or completeness of electronic copies of this plan sheet.

SURVEY CONTROL

PRHV 211

Fnd PK Nail on AC Shoulder
86.901 Lt ℄ Rte 91
Sta 518+82.84
N 2 255 691.469
E 6 081 270.111
Elev = 257.021

PRHV 212

Fnd Pk Nail on AC Shoulder
89.550 Lt ℄ Rte 91
Sta 520+07.96
N 2 255 608.043
E 6 081 363.384
Elev = 257.305

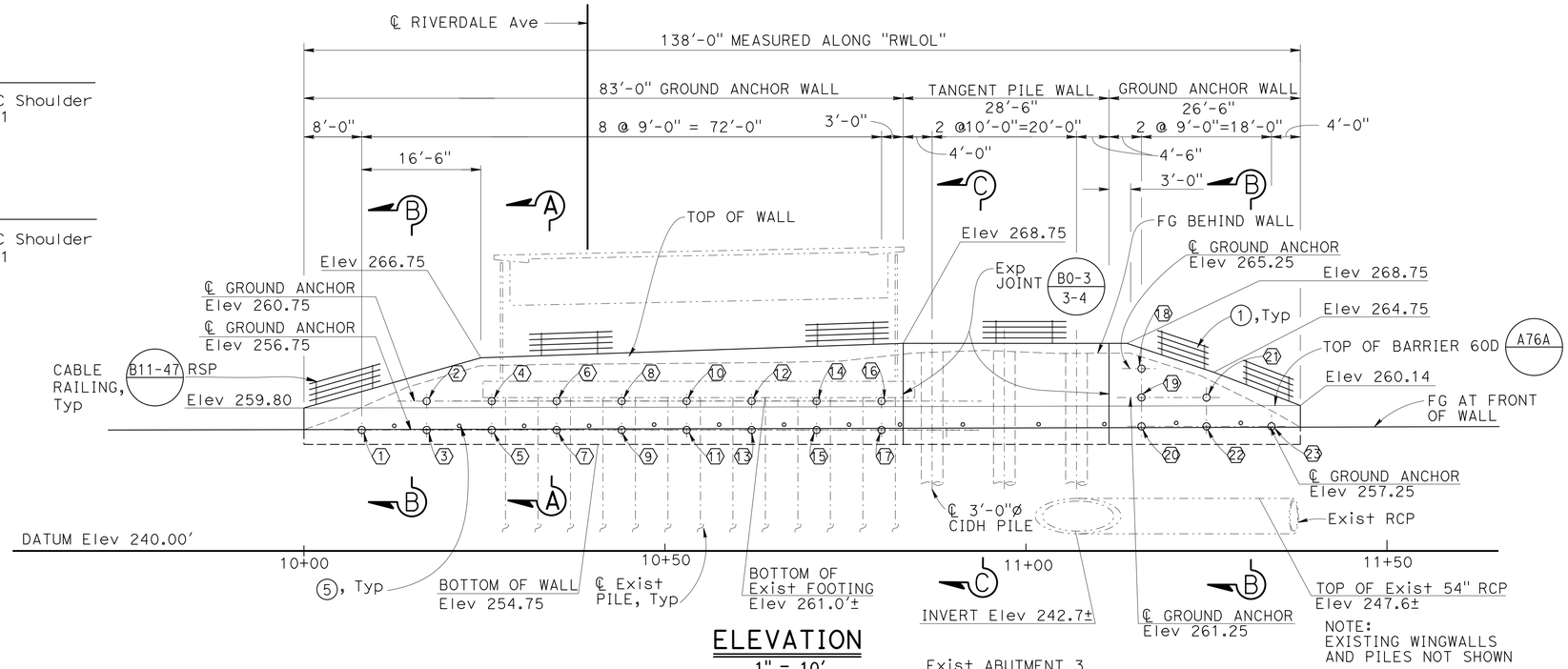

ELEVATION
1" = 10'

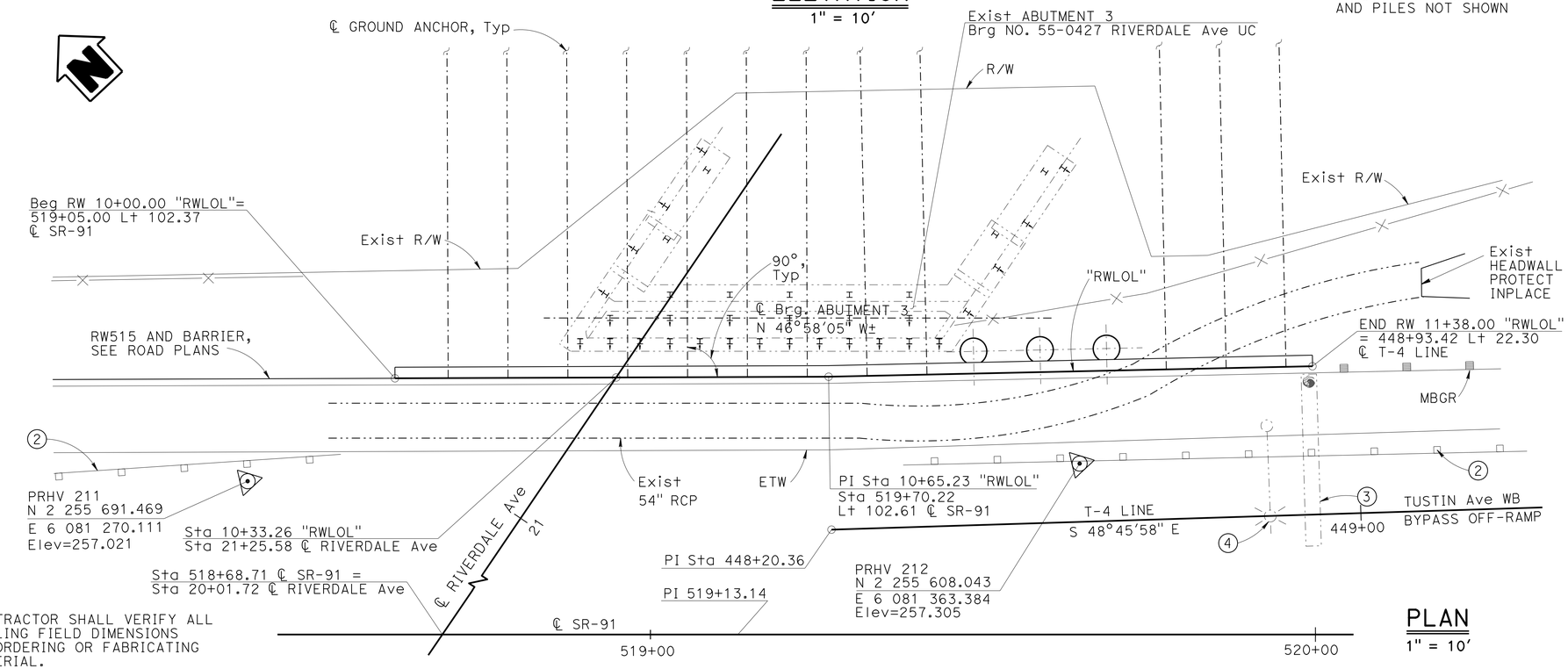

PLAN
1" = 10'

NOTE:
THE CONTRACTOR SHALL VERIFY ALL CONTROLLING FIELD DIMENSIONS BEFORE ORDERING OR FABRICATING ANY MATERIAL.

LEGEND

- NEW STRUCTURE
- EXISTING STRUCTURE
- BATTERED PILE (1:3 BATTER)
- VERTICAL PILE
- GROUND ANCHOR

NOTES:

1. CABLE RAILING B11-47 RSP
2. REMOVE Exist MBGR, SEE "ROAD PLANS"
3. REMOVE Exist OVERHEAD SIGN STRUCTURE, SEE "ROAD PLANS"
4. REMOVE Exist LIGHT FIXTURE, SEE "ROAD PLANS"
5. GEOCOMPOSITE DRAIN STRIP AND PVC OUTLET PIPE BETWEEN GROUND ANCHORS AND CIDH PILES, SEE "MISCELLANEOUS DETAILS" SHEET.
6. FOR SECTION A-A AND B-B, SEE "GROUND ANCHOR WALL DETAILS NO. 1" AND "GROUND ANCHOR WALL DETAILS NO. 2" SHEETS.

QUANTITIES

STRUCTURE EXCAVATION (RETAINING WALL)	28	CY
STRUCTURE EXCAVATION (TYPE Y-1) (AERIALLY DEPOSITED LEAD)	7	CY
STRUCTURE EXCAVATION (GROUND ANCHOR WALL)	90	CY
STRUCTURE BACKFILL (RETAINING WALL)	2	CY
STRUCTURE BACKFILL (GROUND ANCHOR WALL)	8	CY
GROUND ANCHOR (SUBHORIZONTAL)	23	EA
36" CAST-IN-DRILLED-HOLE CONCRETE PILING	85	LF
STRUCTURAL CONCRETE, RETAINING WALL	55	CY
FRACTURED RIB TEXTURE	1,030	SQFT
DRILL AND BOND DOWEL	117	LF
BAR REINFORCING STEEL (BRIDGE)	4,303	LB
BAR REINFORCING STEEL (RETAINING WALL)	23,945	LB
STRUCTURAL SHOTCRETE	44	CY
MINOR CONCRETE (GUTTER) (CY)	5	CY
CABLE RAILING	140	LF
CONCRETE BARRIER (TYPE 60D)	138	LF

BARTT GUNTER
DESIGN ENGINEER

	BY	CHECKED
DESIGN	WEI-KUNG HSIA	RUI WANG
DETAILS	K. FARAHZADI \ H. MAHBOOBI	RUI WANG
QUANTITIES	ARNEL VEGA	RUI WANG

LOAD & RESISTANCE FACTOR DESIGN — LIVE LOADING: HL93 W/"LOW-BOY"; PERMIT DESIGN VEHICLE
LAYOUT — BY WEI-KUNG HSIA — CHECKED Daryoush Balbas
SPECIFICATIONS — BY THERESA NIDWICK — PLANS AND SPECS COMPARED THERESA NIDWICK

ORIGINAL SCALE IN INCHES FOR REDUCED PLANS 0 1 2 3

STATE OF CALIFORNIA
DEPARTMENT OF TRANSPORTATION

DIVISION OF ENGINEERING SERVICES
STRUCTURE DESIGN
DESIGN BRANCH 19

BRIDGE NO. 55E0149
POST MILE 8.8

RETAINING WALL NO. 519
GENERAL PLAN

UNIT: 3621
PROJECT NUMBER & PHASE: 1200000078 - 1 CONTRACT NO.: 12-0C5601

DISREGARD PRINTS BEARING EARLIER REVISION DATES — REVISION DATES 11/02/11 01/20/13 01/30/13 — SHEET 1 OF 11

USERNAME => s12614 DATE PLOTTED => 14-MAY-2013 TIME PLOTTED => 13:51

STRUCTURES DESIGN GENERAL PLAN SHEET (ENGLISH) (REV.09-01-10)

FILE => 55e-0149-rw519-a-gp01.dgn

DIST	COUNTY	ROUTE	POST MILES TOTAL PROJECT	SHEET No.	TOTAL SHEETS
12	Ora	91	8.1/9.3,10.1	348	357

REGISTERED CIVIL ENGINEER 01-25-13 DATE

4-15-13
PLANS APPROVAL DATE

REGISTERED PROFESSIONAL ENGINEER WEI-KUNG HSIA No. C50210 Exp. 06-30-13 CIVIL STATE OF CALIFORNIA

The State of California or its officers or agents shall not be responsible for the accuracy or completeness of electronic copies of this plan sheet.

GENERAL NOTES

LOAD AND RESISTANCE FACTOR DESIGN

DESIGN CRITERIA: AASHTO LRFD BRIDGE DESIGN SPECIFICATIONS, 4TH EDITION WITH CALTRANS AMENDMENTS

LOADING: VARIABLE SLOPE WITH NO LIVE LOAD

DESIGN SOIL PARAMETERS: SEE IDEALIZED SOIL PROFILE AND STRENGTH PARAMETERS TABLE.
SHEAR WAVE VELOCITY Vs30 = 980 ft/s TO 1,100 ft/s
PEAK GROUND ACCELERATION (PGA) = 0.6 g

REINFORCED CONCRETE: ASTM A706
fy = 60 ksi (YIELD STRENGTH OF REINFORCEMENT)
f`c = 3600 psi (MINIMUM CONCRETE STRENGTH)
f`c = 3600 psi (MINIMUM SHOTCRETE STRENGTH AT STRESSING)

STRUCTURE STEEL: ASTM A36 fy = 36 ksi

PRESTRESSING: SEE "GENERAL NOTES" ON "SUB HORIZONTAL GROUND ANCHOR DETAILS" SHEET.

STANDARD PLANS DATED 2010

A10A	ABBREVIATIONS (SHEET 1 OF 2)
A10B	ABBREVIATIONS (SHEET 2 OF 2)
A10C	LINES AND SYMBOLS (SHEET 1 OF 3)
A10D	LINES AND SYMBOLS (SHEET 2 OF 3)
A10E	LINES AND SYMBOLS (SHEET 3 OF 3)
A10F	LEGEND-SOIL (SHEET 1 OF 2)
A10G	LEGEND-SOIL (SHEET 2 OF 2)
A10H	LEGEND-ROCK
A76A	CONCRETE BARRIER TYPE 60
B0-3	BRIDGE DETAILS
RSP B3-5	RETAINING WALL DETAIL NO.1
B3-6	RETAINING WALL DETAIL NO.2
RSP B11-47	CABLE RAILING

STANDARD PLAN SHEET NO.

DETAIL NO.

GROUND ANCHOR DATA TABLE

NUMBER	VERTICAL ANGLE	FACTORED DESIGN LOAD (kips)	FACTORED TEST LOAD (kips)	LOCK OFF LOAD (kips)	UNBONDED LENGTH (ft)
1	20	11	11	7	20
2	20	24	24	16	20
3	20	24	24	16	20
4	15	84	84	42	20
5	15	84	84	42	20
6	10	84	84	42	20
7	25	84	84	42	20
8	15	84	84	42	20
9	15	84	84	42	20
10	15	84	84	42	20
11	15	84	84	42	20
12	15	84	84	42	20
13	15	84	84	42	20
14	15	84	84	42	20
15	15	84	84	42	20
16	15	84	84	42	20
17	15	84	84	42	20
18	15	25	25	17	20
19	15	25	25	17	20
20	15	25	25	17	20
21	15	23	23	16	20
22	15	23	23	16	20
23	15	7	7	5	20

NOTE: CONTRACTOR IS RESPONSIBLE FOR DETERMINING THE BONDED LENGTH OF THE GROUND ANCHOR. HOWEVER, THE BONDED LENGTH OF THE ANCHOR SHOULD NOT BE LESS THAN 15 FEET.

IDEALIZED SOIL PROFILE AND STRENGTH PARAMETERS TABLE

DEPTH (FROM WALL TOP), feet	ELEVATION, feet	SOIL TYPE, USCS	AVERAGE BLOWCOUNTS N60 /pp#	TOTAL UNIT WEIGHT, pcf	APPARENT FRICTION ANGLE, DEGREE	UNDRAINED SHEAR STRENGTH, psf
0-7	267-260	LEAN CLAY (CL), STIFF	pp# 0.75 TO 1.25	120	NA	1000
7-34	260-233	LEAN CLAY (CL), VERY STIFF	pp# 1.75 TO 4.5	120	NA	2000
23-33	233-223	SILTY SAND & GRAVEL (SM/GM)	N60 > 50	125	38	NA

INDEX TO PLANS

No.	SHEET NAME
1	GENERAL PLAN
2	INDEX TO PLANS
3	FOUNDATION PLAN
4	GROUND ANCHOR WALL DETAILS NO. 1
5	GROUND ANCHOR WALL DETAILS NO. 2
6	SUB HORIZONTAL GROUND ANCHOR DETAILS
7	TANGENT PILE WALL DETAILS NO. 1
8	TANGENT PILE WALL DETAILS NO. 2
9	MISCELLANEOUS DETAILS
10	LOG OF TEST BORINGS 1 of 2
11	LOG OF TEST BORINGS 2 of 2

DIST	COUNTY	ROUTE	POST MILES TOTAL PROJECT	SHEET No.	TOTAL SHEETS
12	Ora	91	8.1/9.3,10.1	349	357

REGISTERED CIVIL ENGINEER 01-25-13 DATE

4-15-13
PLANS APPROVAL DATE

REGISTERED PROFESSIONAL ENGINEER
WEI-KUNG HSIA
No. C50210
Exp. 06-30-13
CIVIL
STATE OF CALIFORNIA

The State of California or its officers or agents shall not be responsible for the accuracy or completeness of electronic copies of this plan sheet.

CURVE DATA

No.	R	Δ	T	L
(1)	1500.000	9°25'19"	123.613	246.669

(AA) Sta 518+68.71 ℄ Route 91=
Sta 20+01.72 ℄ Riverdale Ave
(BB) Sta 10+33.26 LOL "RWLOL"
Sta 21+25.58 ℄ Riverdale Ave

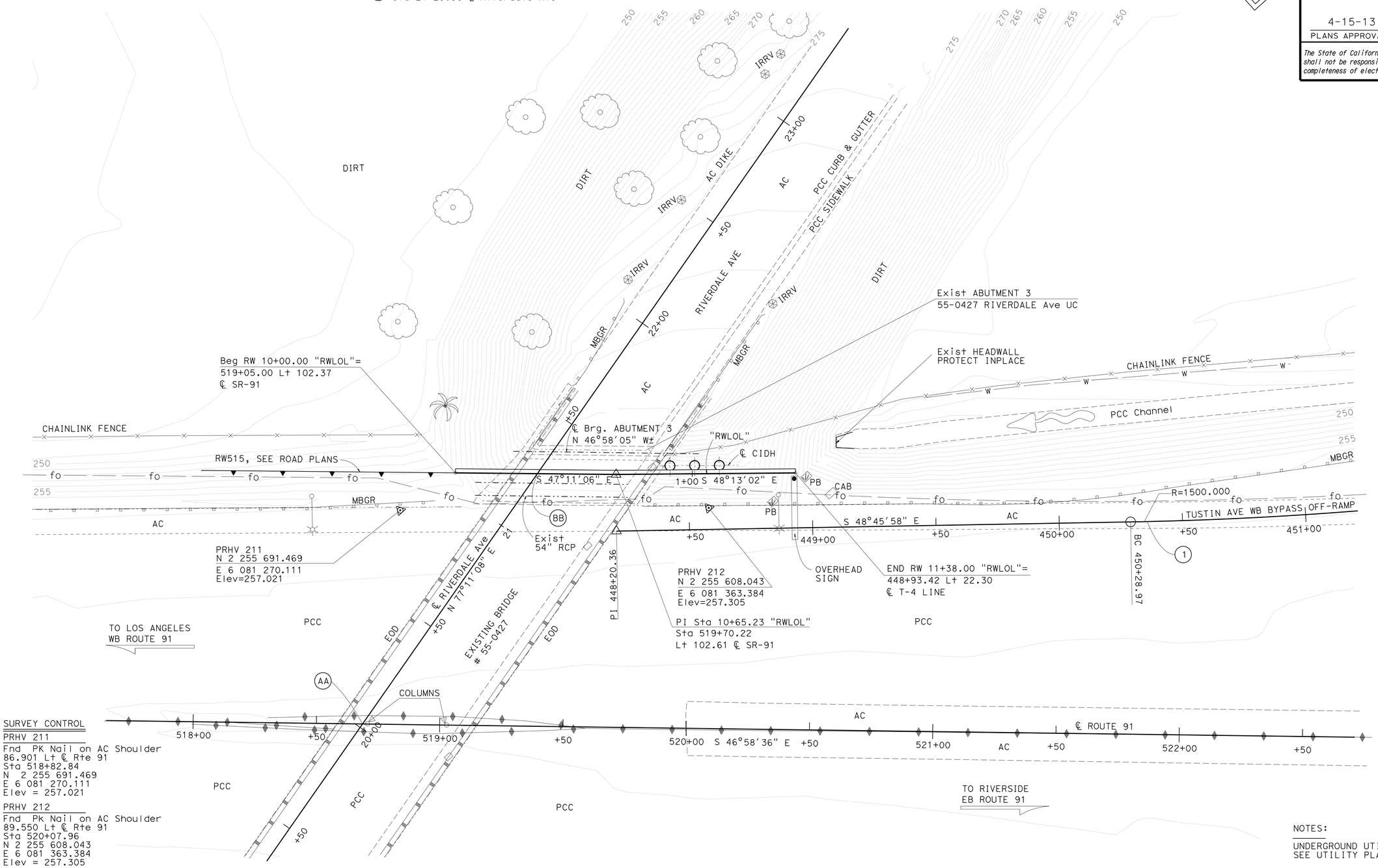

SURVEY CONTROL

PRHV 211
Fnd PK Nail on AC Shoulder
86.901 Lt ℄ Rte 91
Sta 518+82.84
N 2 255 691.469
E 6 081 270.111
Elev = 257.021

PRHV 212
Fnd PK Nail on AC Shoulder
89.550 Lt ℄ Rte 91
Sta 520+07.96
N 2 255 608.043
E 6 081 363.384
Elev = 257.305

NOTES:

UNDERGROUND UTILITIES AS SHOWN ARE APPROXIMATE, SEE UTILITY PLANS FOR MORE INFORMATION

PRELIMINARY INVESTIGATION SECTION

SCALE 1"=20'	VERT.DATUM NAVD 88	PHOTOGRAMMETRY AS OF: X		
	HORZ.DATUM NAD 83	SURVEYED BY District	CHECKED BY C. Stewart	
ALIGNMENT TIES Dist. Traverse Sheet		DRAFTED BY M. Sadaghiani 12-11	CHECKED BY E. Vigjar 12-11	

DESIGN	BY WEI-KUNG HSIA	CHECKED RUI WANG
DETAILS	BY HENGAMEH MAHBOOBI	CHECKED RUI WANG
QUANTITIES	BY ARNEL VEGA	CHECKED RUI WANG

STATE OF CALIFORNIA
DEPARTMENT OF TRANSPORTATION

DIVISION OF ENGINEERING SERVICES
STRUCTURE DESIGN
DESIGN BRANCH 19

BRIDGE NO. 55E0149
POST MILE 8.8

RETAINING WALL NO. 519
FOUNDATION PLAN

STRUCTURES FOUNDATION PLAN SHEET (ENGLISH) (REV. 09-01-10)

ORIGINAL SCALE IN INCHES FOR REDUCED PLANS 0 1 2 3

UNIT: 3647
PROJECT NUMBER & PHASE: 1200000078 - 1 CONTRACT NO.: 12-0C5601

DISREGARD PRINTS BEARING EARLIER REVISION DATES

REVISION DATES: 12/20/11 12/21/12 01/22/13

SHEET 3 OF 11

FILE => 55e-0149-rw519-e-fdp101.dgn

DIST	COUNTY	ROUTE	POST MILES TOTAL PROJECT	SHEET No.	TOTAL SHEETS
12	Ora	91	8.1/9.3,10.1	350	357

REGISTERED CIVIL ENGINEER 01-25-13 DATE

4-15-13
PLANS APPROVAL DATE

REGISTERED PROFESSIONAL ENGINEER WEI-KUNG HSIA No. C50210 Exp. 06-30-13 CIVIL STATE OF CALIFORNIA

The State of California or its officers or agents shall not be responsible for the accuracy or completeness of electronic copies of this plan sheet.

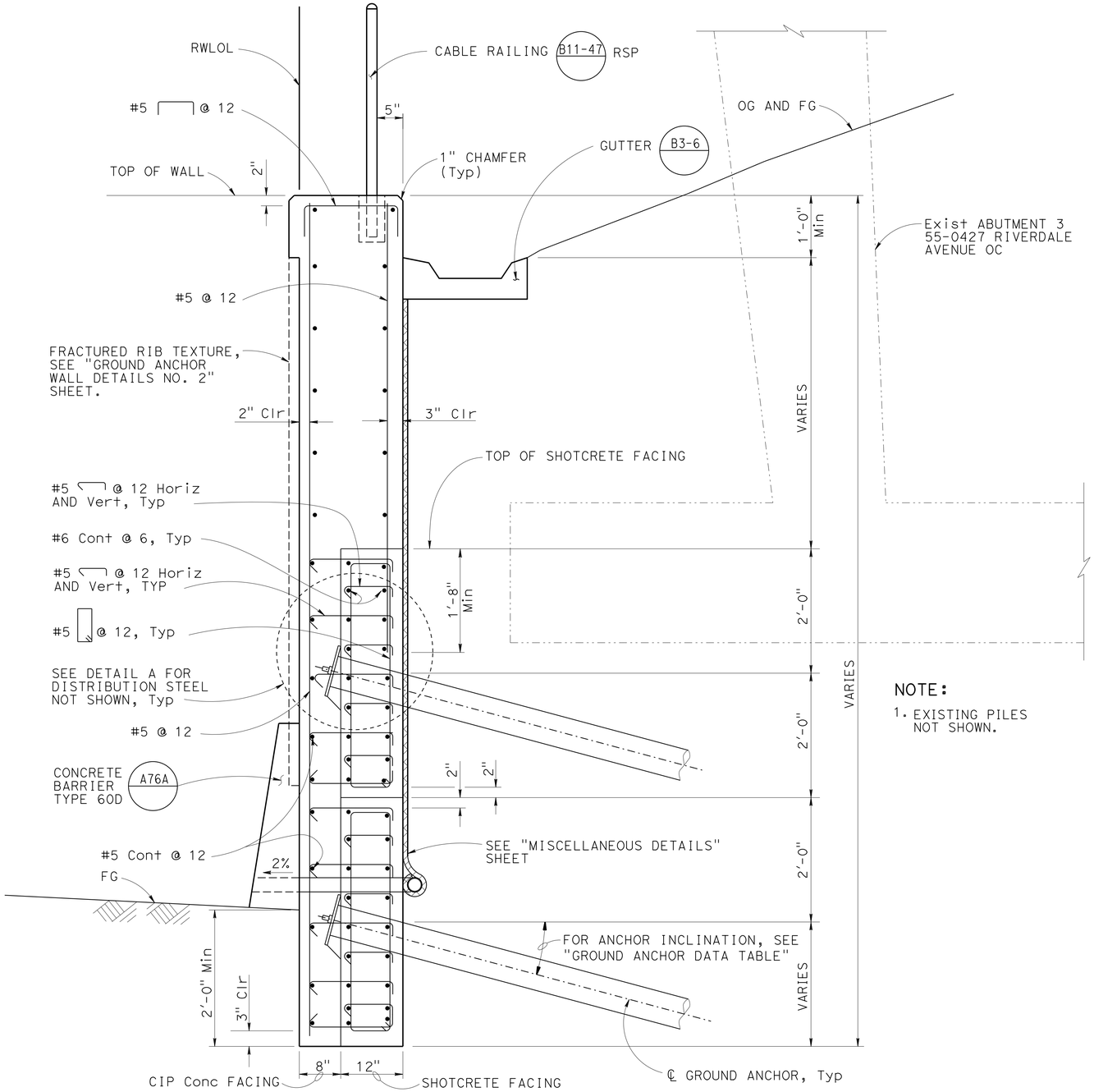

NOTE:
1. EXISTING PILES NOT SHOWN.

SECTION A-A
1" = 1'-0"

NOTE:
THE CONTRACTOR SHALL VERIFY ALL CONTROLLING FIELD DIMENSIONS BEFORE ORDERING OR FABRICATING ANY MATERIAL.

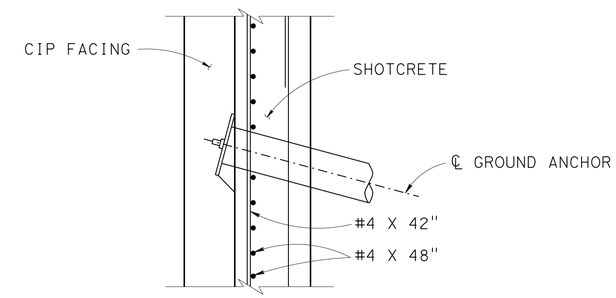

DETAIL A
1" = 1'-0"

NOTE:
For Details not shown, see "TIEBACK WALL TYPICAL SECTION".

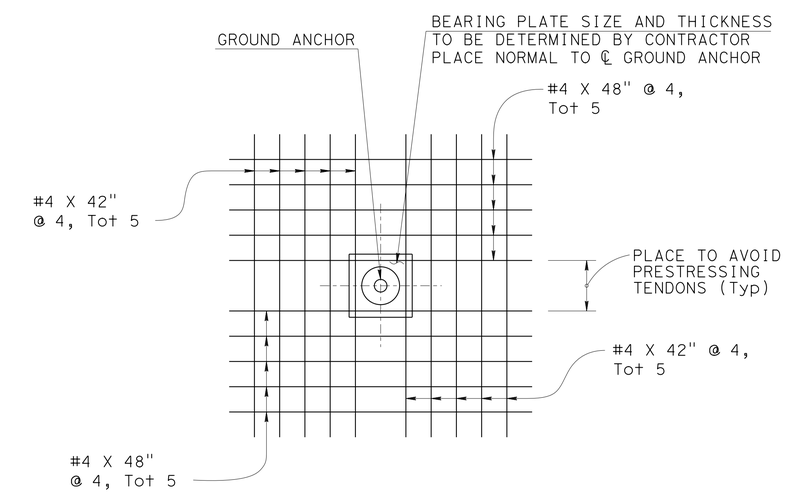

NOTE: CENTER BARS ABOUT GROUND ANCHOR

DISTRIBUTION STEEL DETAIL
1" = 1'-0"

	BY	CHECKED
DESIGN	WEI-KUNG HSIA	RUI WANG
DETAILS	HENGAMEH MAHBOOBI	RUI WANG
QUANTITIES	ARNEL VEGA	RUI WANG

STATE OF CALIFORNIA
DEPARTMENT OF TRANSPORTATION

DIVISION OF ENGINEERING SERVICES
STRUCTURE DESIGN
DESIGN BRANCH 19

BRIDGE NO. 55E0149
POST MILE 8.8

RETAINING WALL NO. 519
GROUND ANCHOR WALL DETAILS NO. 1

STRUCTURES DESIGN DETAIL SHEET (ENGLISH) (REV. 09-01-10)

ORIGINAL SCALE IN INCHES FOR REDUCED PLANS 0 1 2 3

UNIT: 3621
PROJECT NUMBER & PHASE: 1200000078 - 1 CONTRACT NO.: 12-0C5601

DISREGARD PRINTS BEARING EARLIER REVISION DATES

REVISION DATES: 01/23/12 01/08/13 01/21/13

SHEET 4 OF 11

FILE => 55e-0149-rw519-k-tstb01.dgn

USERNAME => s127614 DATE PLOTTED => 24-APR-2013 TIME PLOTTED => 11:51

DIST	COUNTY	ROUTE	POST MILES TOTAL PROJECT	SHEET No.	TOTAL SHEETS
12	Ora	91	8.1/9.3,10.1	351	357

REGISTERED CIVIL ENGINEER 01-25-13 DATE

4-15-13
PLANS APPROVAL DATE

REGISTERED PROFESSIONAL ENGINEER WEI-KUNG HSIA No. C50210 Exp. 06-30-13 CIVIL STATE OF CALIFORNIA

The State of California or its officers or agents shall not be responsible for the accuracy or completeness of electronic copies of this plan sheet.

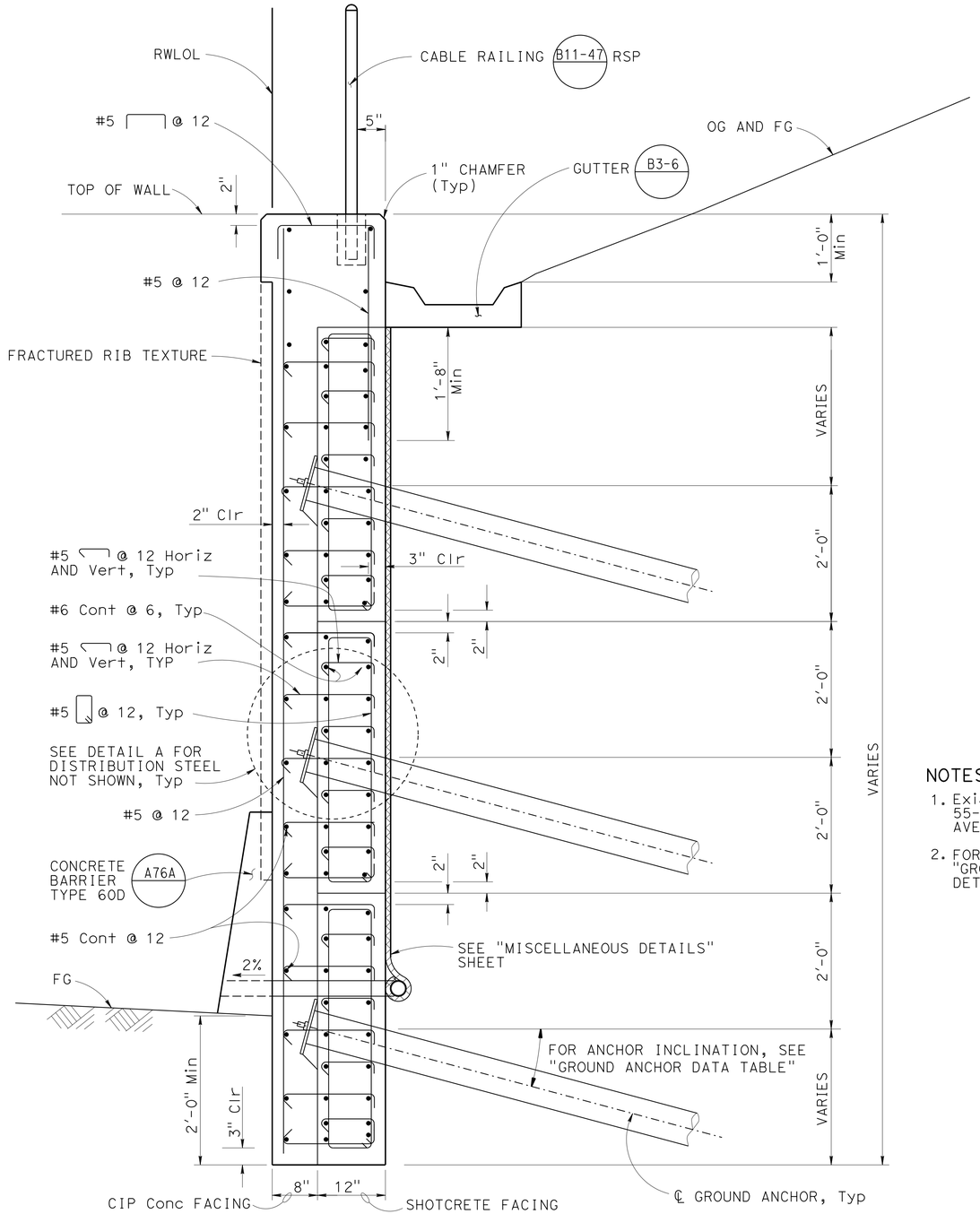

SECTION B-B

1" = 1'-0"

NOTES:

1. Exist ABUTMENT 3 55-0427 RIVERDALE AVENUE OC NOT SHOWN.
2. FOR DETAIL A, SEE "GROUND ANCHOR WALL DETAILS NO.1" SHEET.

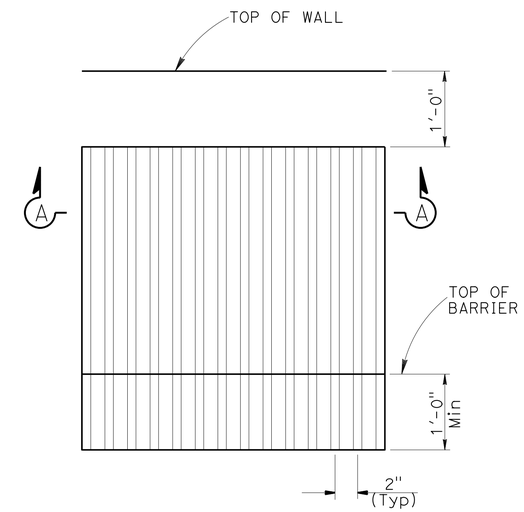

FRACTURED RIB TEXTURE

NO SCALE

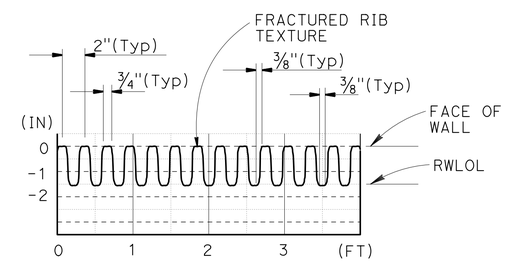

SECTION A-A

H - 1"=1'-0"
V - 1"=3"

NOTE:
THE CONTRACTOR SHALL VERIFY ALL CONTROLLING FIELD DIMENSIONS BEFORE ORDERING OR FABRICATING ANY MATERIAL.

	BY	CHECKED
DESIGN	WEI-KUNG HSIA	RUI WANG
DETAILS	HENGAMEH MAHBOOBI	RUI WANG
QUANTITIES	ARNEL VEGA	RUI WANG

STATE OF CALIFORNIA
DEPARTMENT OF TRANSPORTATION

DIVISION OF ENGINEERING SERVICES
STRUCTURE DESIGN
DESIGN BRANCH 19

BRIDGE NO. 55E0149
POST MILE 8.8

RETAINING WALL NO. 519
GROUND ANCHOR WALL DETAILS NO. 2

STRUCTURES DESIGN DETAIL SHEET (ENGLISH) (REV. 09-01-10)

ORIGINAL SCALE IN INCHES FOR REDUCED PLANS 0 1 2 3

UNIT: 3621
PROJECT NUMBER & PHASE: 1200000078 - 1 CONTRACT NO.: 12-0C5601

DISREGARD PRINTS BEARING EARLIER REVISION DATES

REVISION DATES 06/25/12 01/08/13 01/22/13

SHEET 5 OF 11

FILE => 55e-0149-rw519-k-tstb02.dgn

USERNAME => s121614 DATE PLOTTED => 24-APR-2013 TIME PLOTTED => 11:51

DIST	COUNTY	ROUTE	POST MILES TOTAL PROJECT	SHEET No.	TOTAL SHEETS
12	Ora	91	8.1/9.3,10.1	352	357

REGISTERED CIVIL ENGINEER 01/16/13 DATE

4-15-13
PLANS APPROVAL DATE

REGISTERED PROFESSIONAL ENGINEER Gerrard Hight No. 52364 Exp. 12/31/2014 CIVIL STATE OF CALIFORNIA

The State of California or its officers or agents shall not be responsible for the accuracy or completeness of electronic copies of this plan sheet.

GENERAL NOTES

DESIGN:

AASHTO LRFD Bridge Design Specifications, 4th Edition with California Amendments.

PRESTRESSING STEEL:

Bars - ASTM Designation: A722 Type II (150 ksi)

Strand Tendons-ASTM Designation: A416 (270 Ksi Low Relaxation steel)

FTL = Factored Test Load per anchor (Kips)

fpu = Minimum tensile strength of prestressing steel

As = Minimum cross sectional area of prestressing steel in ground anchor (square inch)

$$As(Min) = \frac{1.0\ FTL}{0.75\ fpu} \quad \text{(Strands)}$$

$$As(Min) = \frac{1.0\ FTL}{0.80\ fpu} \quad \text{(Bars)}$$

NOTES:

(A) Level of initial grouting for drilled hole 6" in diameter or smaller

(B) Level of secondary grouting

(C) Level of initial grouting inside corrugated sheathing

(D) Bonded length shall be determined by the contractor

(E) For unbonded length, see PROJECT PLANS

(F) For inclination, see PROJECT PLANS

(G) Face of Wall Excavation

NOTES:

1. Anchorage enclosure shall only be used when anchor head assembly is not enclosed in concrete.
2. Anchorage enclosure shall have provisions to allow injecting grout at low end and venting at high end. Galvanize after fabrication.
3. Silicone sealant to cover full width of flange.
4. Steel tube (Min thickness = 1/4") welded to bearing plate. Galvanize assembly after fabrication
5. Steel tube welded to bearing plate. Inside diameter of steel tube (Min thickness = 1/4") to be 1" greater than outside diameter of smooth sheathing.
6. Galvanize assembly after fabrication.
7. For other wall details, see PROJECT PLANS.

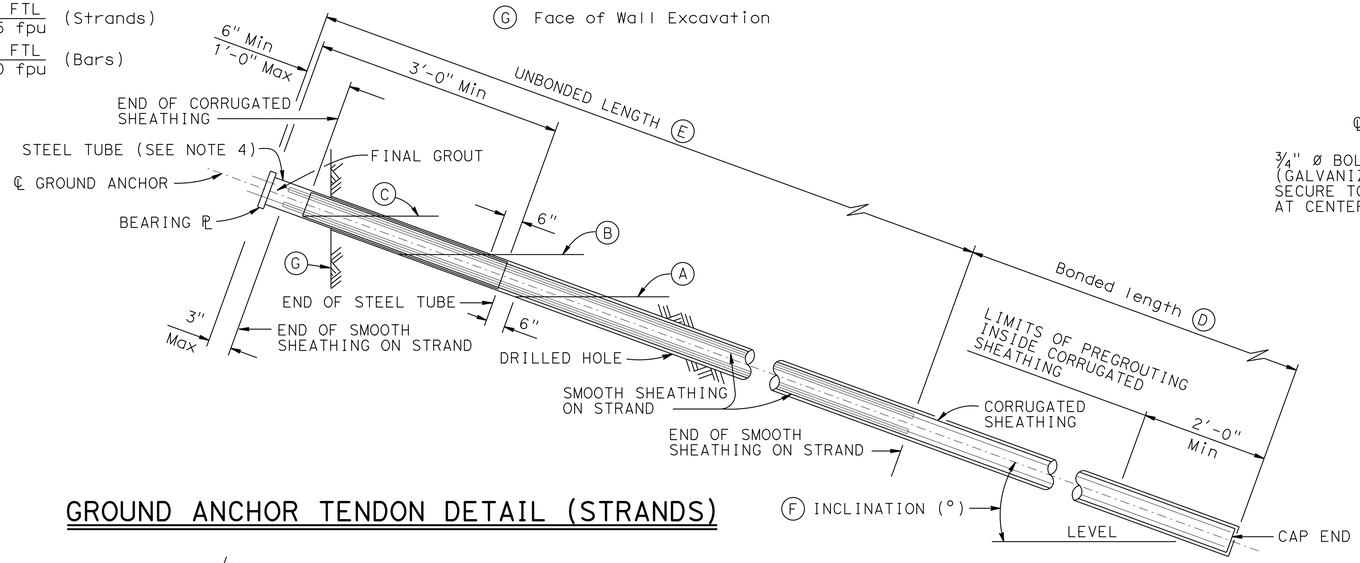

GROUND ANCHOR TENDON DETAIL (STRANDS)

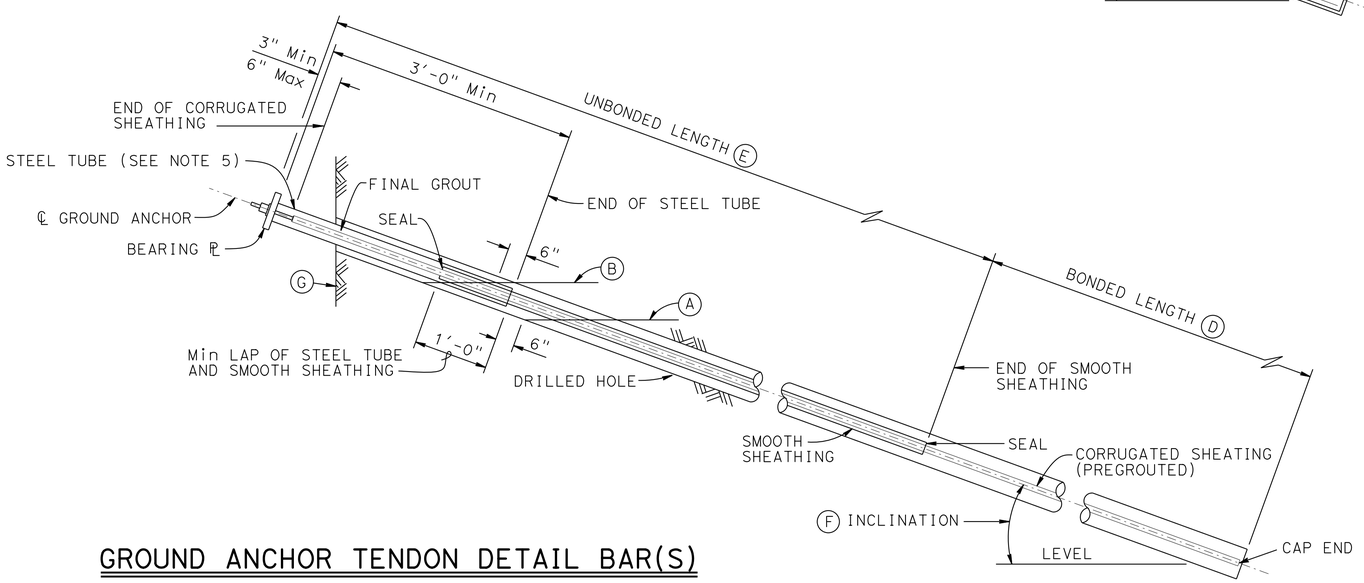

GROUND ANCHOR TENDON DETAIL BAR(S)

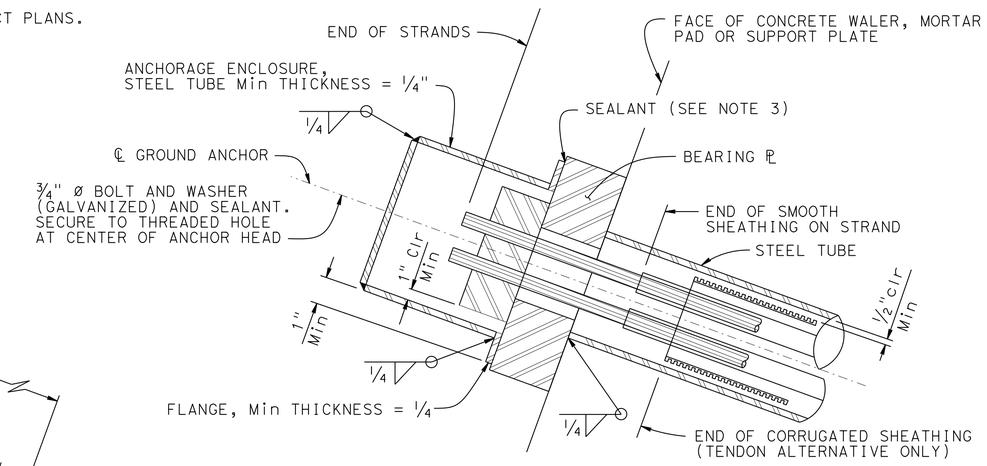

ALTERNATIVE X

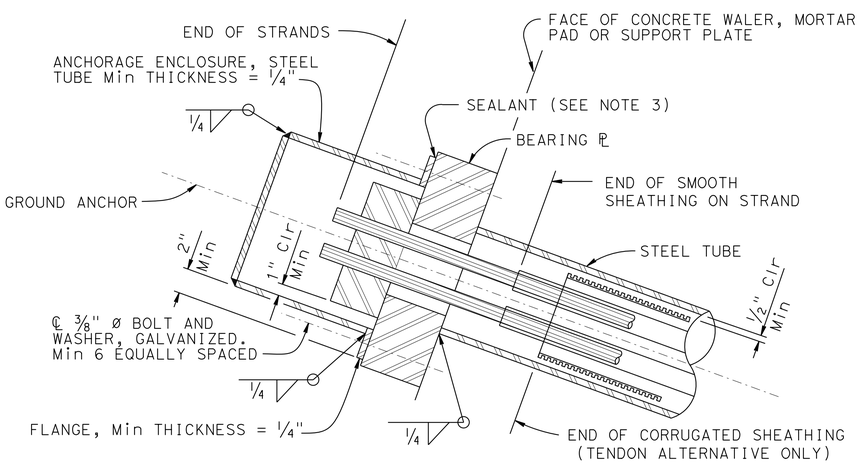

ALTERNATIVE Y

ANCHORAGE ENCLOSURE DETAILS

NO SCALE

STANDARD DRAWING		STATE OF CALIFORNIA DEPARTMENT OF TRANSPORTATION	DIVISION OF ENGINEERING SERVICES	BRIDGE NO. 55E0149 / POST MILE 8.8	RETAINING WALL NO. 519
FILE NO. xs12-040	APPROVAL DATE January 2012				SUB HORIZONTAL GROUND ANCHOR DETAILS

DS OSD 2147A (ENGLISH STANDARD DRAWING "XS" BORDER REV. (02-02-11)

ORIGINAL SCALE IN INCHES FOR REDUCED PLANS 0 1 2 3

UNIT: 3621
PROJECT NUMBER & PHASE: 1200000078 - 1 CONTRACT NO.: 12-0C5601

DISREGARD PRINTS BEARING EARLIER REVISION DATES → REVISION DATES 01-27-12 12-11-12 12-05-12 SHEET 6 OF 11

FILE => 55e-0149-rw519-r-adet01.dgn

USERNAME => s121614 DATE PLOTTED => 24-APR-2013 TIME PLOTTED => 11:51

DIST	COUNTY	ROUTE	POST MILES TOTAL PROJECT	SHEET No.	TOTAL SHEETS
12	Ora	91	8.1/9.3,10.1	353	357

REGISTERED CIVIL ENGINEER 01-25-13 DATE

4-15-13
PLANS APPROVAL DATE

REGISTERED PROFESSIONAL ENGINEER
WEI-KUNG HSIA
No. C50210
Exp. 06-30-13
CIVIL
STATE OF CALIFORNIA

The State of California or its officers or agents shall not be responsible for the accuracy or completeness of electronic copies of this plan sheet.

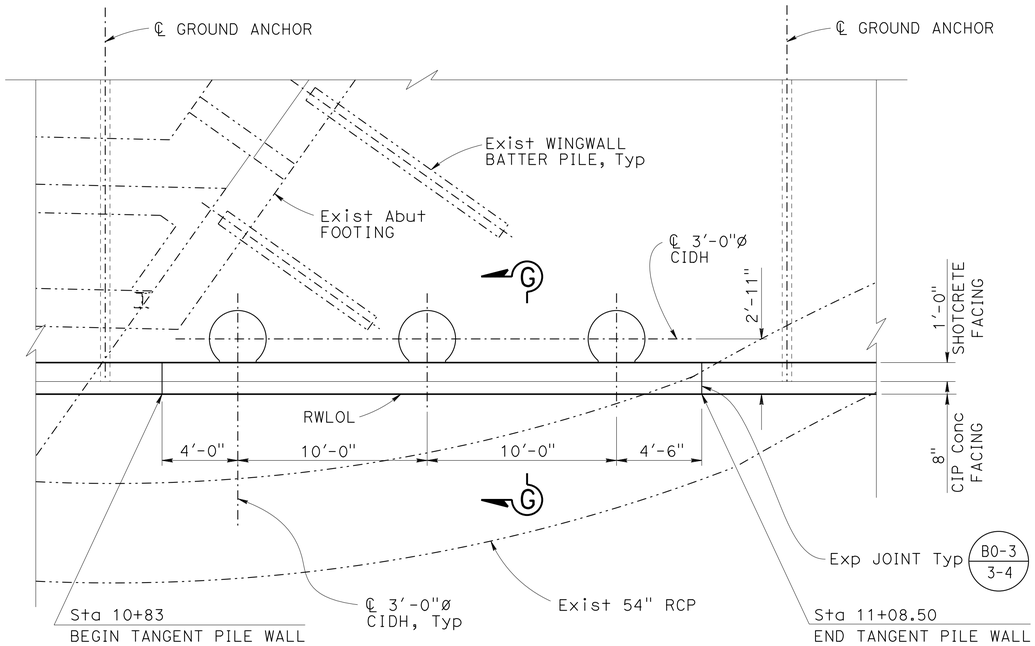

PLAN
1/4" = 1'-0"

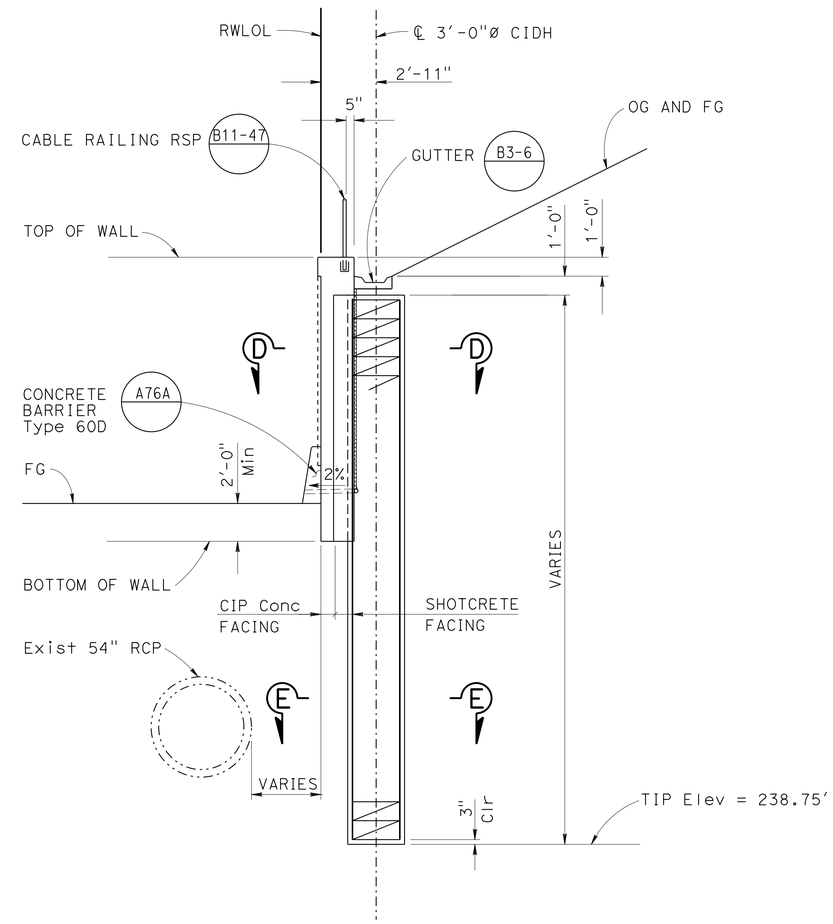

SECTION C-C
1/4" = 1'-0"

NOTE:
1. FOR SECTION D-D, E-E, AND G-G, SEE "TANGENT PILE DETAILS NO. 2" SHEET.

NOTE:
THE CONTRACTOR SHALL VERIFY ALL CONTROLLING FIELD DIMENSIONS BEFORE ORDERING OR FABRICATING ANY MATERIAL.

	BY	CHECKED
DESIGN	WEI-KUNG HSIA	RUI WANG
DETAILS	HENGAMEH MAHBOOBI	RUI WANG
QUANTITIES	ARNEL VEGA	RUI WANG

STATE OF CALIFORNIA
DEPARTMENT OF TRANSPORTATION

DIVISION OF ENGINEERING SERVICES
STRUCTURE DESIGN
DESIGN BRANCH 19

BRIDGE NO. 55E0149
POST MILE 8.8

RETAINING WALL NO. 519
TANGENT PILE WALL DETAILS NO. 1

STRUCTURES DESIGN DETAIL SHEET (ENGLISH) (REV. 09-01-10)

ORIGINAL SCALE IN INCHES FOR REDUCED PLANS 0 1 2 3

UNIT: 3621
PROJECT NUMBER & PHASE: 1200000078 - 1 CONTRACT NO.: 12-0C5601

DISREGARD PRINTS BEARING EARLIER REVISION DATES

REVISION DATES: 06/12/12 01/22/13 01/02/13

SHEET 7 OF 11

FILE => 55e-0149-rw519-rg-k-tstb01.dgn

USERNAME => s128614 DATE PLOTTED => 24-APR-2013 TIME PLOTTED => 11:51

DIST	COUNTY	ROUTE	POST MILES TOTAL PROJECT	SHEET No.	TOTAL SHEETS
12	Ora	91	8.1/9.3,10.1	354	357

REGISTERED CIVIL ENGINEER 01-25-13 DATE

4-15-13
PLANS APPROVAL DATE

REGISTERED PROFESSIONAL ENGINEER WEI-KUNG HSIA No. C50210 Exp. 06-30-13 CIVIL STATE OF CALIFORNIA

The State of California or its officers or agents shall not be responsible for the accuracy or completeness of electronic copies of this plan sheet.

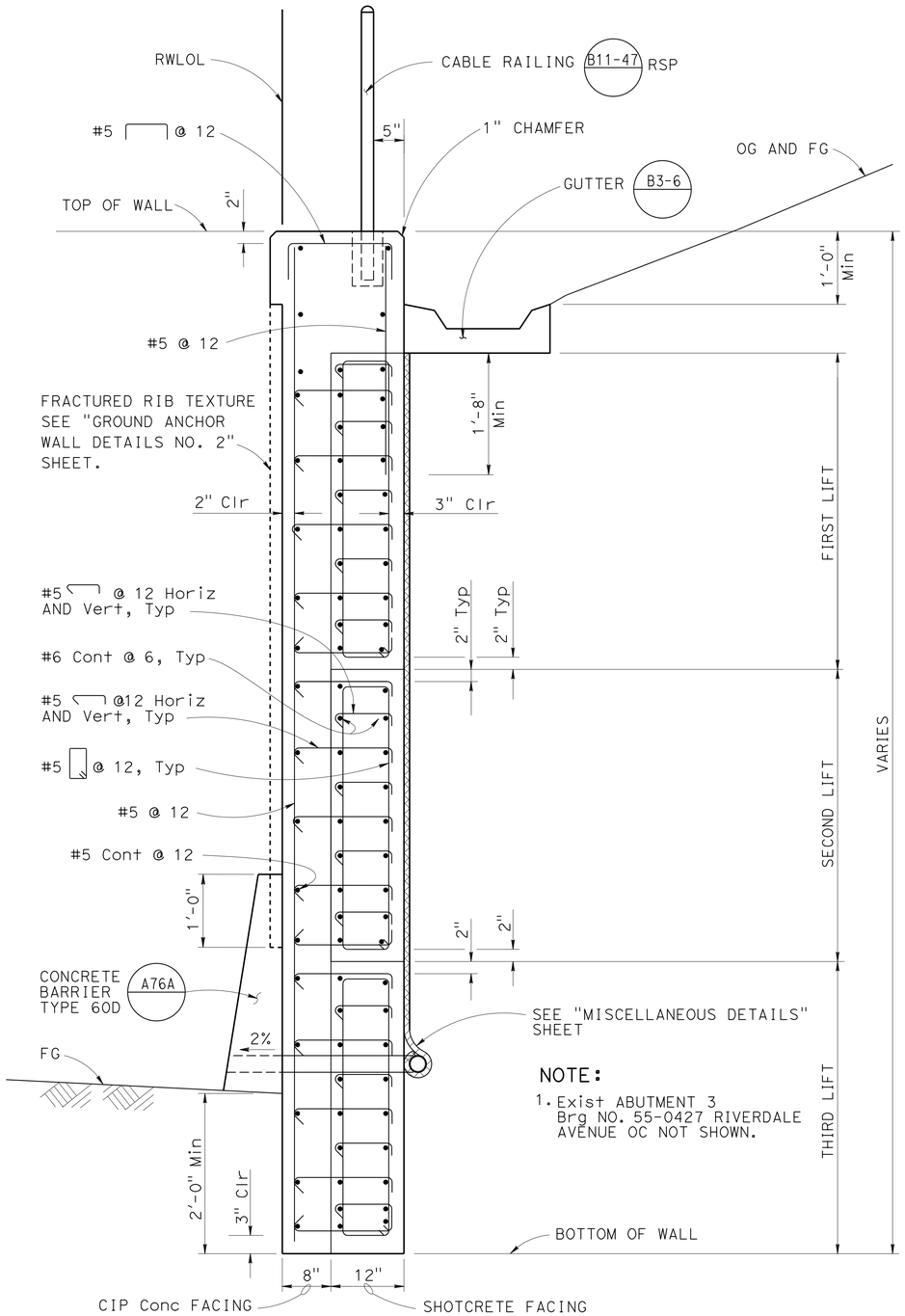

NOTE:
1. Exist ABUTMENT 3 Brg NO. 55-0427 RIVERDALE AVENUE OC NOT SHOWN.

NOTE:
THE CONTRACTOR SHALL VERIFY ALL CONTROLLING FIELD DIMENSIONS BEFORE ORDERING OR FABRICATING ANY MATERIAL.

SECTION G-G
1" = 1'-0"

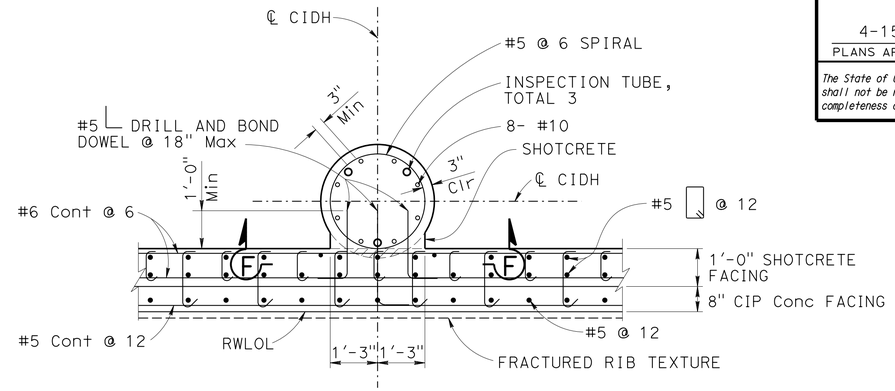

SECTION D-D
½" = 1'-0"

LEGEND

REMOVE PORTION OF CIDH FOR DRILL AND BOND DOWEL AND REBAR PLACING FROM TOP OF CIDH TO BOTTOM OF WALL

NOTE:
THE ORIENTATION OF THE CIDH PILE REBAR CAGE SHALL BE PLACED AS SHOWN ON THE SECTIONS D-D AND E-E.

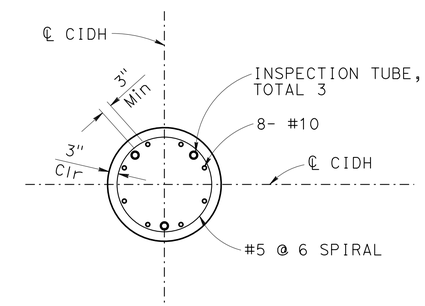

SECTION E-E
½" = 1'-0"

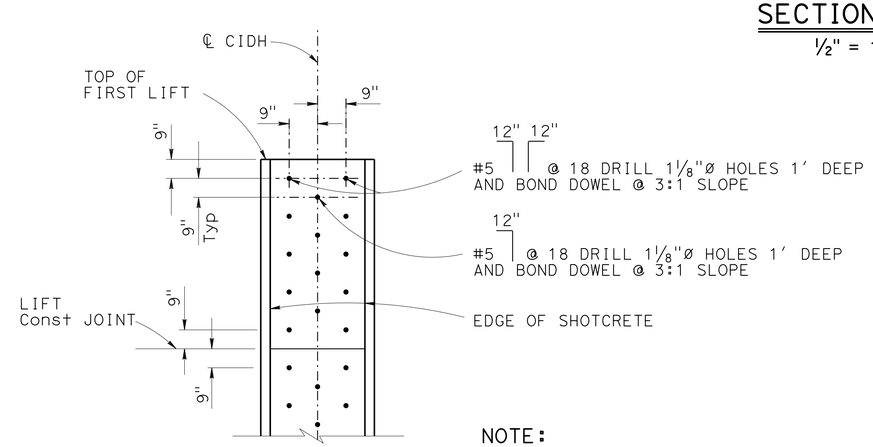

NOTE:
FACING Reinf NOT SHOWN FOR CLARITY

SECTION F-F
NO SCALE

DESIGN	BY WEI-KUNG HSIA	CHECKED RUI WANG	
DETAILS	BY HENGAMEH MAHBOOBI	CHECKED RUI WANG	
QUANTITIES	BY ARNEL VEGA	CHECKED RUI WANG	

STATE OF CALIFORNIA
DEPARTMENT OF TRANSPORTATION

DIVISION OF ENGINEERING SERVICES
STRUCTURE DESIGN
DESIGN BRANCH 19

BRIDGE NO. 55E0149
POST MILE 8.8

RETAINING WALL NO. 519
TANGENT PILE WALL DETAILS NO. 2

STRUCTURES DESIGN DETAIL SHEET (ENGLISH) (REV. 09-01-10)

ORIGINAL SCALE IN INCHES FOR REDUCED PLANS 0 1 2 3

UNIT: 3621
PROJECT NUMBER & PHASE: 1200000078 - 1 CONTRACT NO.: 12-0C5601

DISREGARD PRINTS BEARING EARLIER REVISION DATES

REVISION DATES 06/26/12 01/29/13 04/09/13 SHEET 8 OF 11

FILE => 55e-0149-rw519-rg-k-tstb02.dgn

USERNAME => s121614 DATE PLOTTED => 24-APR-2013 TIME PLOTTED => 11:52

DIST	COUNTY	ROUTE	POST MILES TOTAL PROJECT	SHEET No.	TOTAL SHEETS
12	Ora	91	8.1/9.3,10.1	355	357

REGISTERED CIVIL ENGINEER 01-25-13 DATE

4-15-13
PLANS APPROVAL DATE

REGISTERED PROFESSIONAL ENGINEER WEI-KUNG HSIA No. C50210 Exp. 06-30-13 CIVIL STATE OF CALIFORNIA

The State of California or its officers or agents shall not be responsible for the accuracy or completeness of electronic copies of this plan sheet.

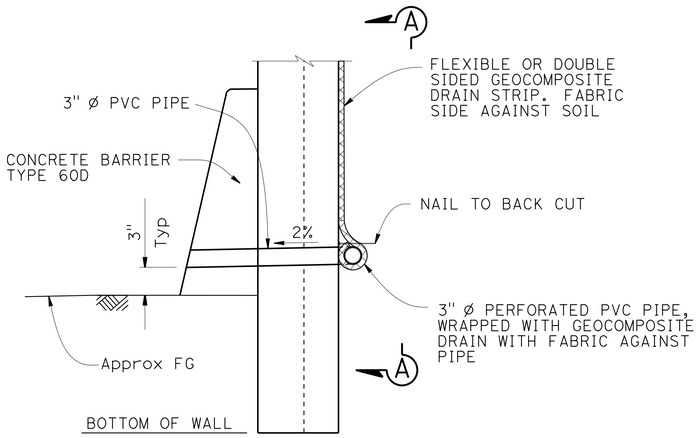

WALL DRAIN DETAIL AT WEEPHOLE

NO SCALE

NOTES:

1. GEOCOMPOSITE DRAIN STRIP PER SECTION 88 GEOSYNTHETICS OF THE STANDARD SPECIFICATIONS
2. ELEVATION OF DRAINS AND WEEPHOLES AS SHOWN ELSEWHERE ON PLANS

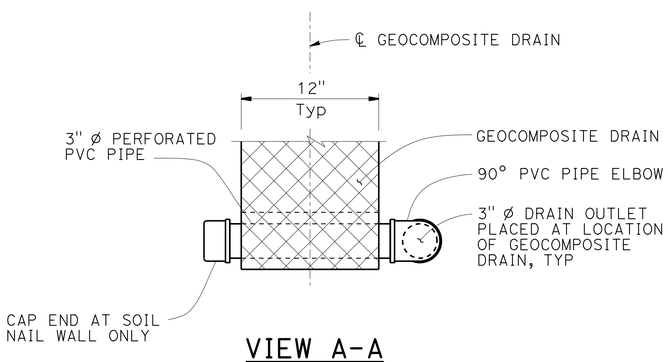

VIEW A-A

NO SCALE

NOTE: GEOCOMPOSITE DRAINS AT 4'-6" MAX SPACING, CENTERED BETWEEN COLUMNS OF GROUND ANCHORS, AND AT 10'-0" SPACING CENTERED BETWEEN CIDH PILES.

NOTE:
THE CONTRACTOR SHALL VERIFY ALL CONTROLLING FIELD DIMENSIONS BEFORE ORDERING OR FABRICATING ANY MATERIAL.

LEGEND

- STRUCTURE EXCAVATION (GROUND ANCHOR WALL)
- STRUCTURE BACKFILL (GROUND ANCHOR WALL)
- STRUCTURE EXCAVATION (RETAINING WALL)
- STRUCTURE BACKFILL (RETAINING WALL)
- STRUCTURE EXCAVATION (TYPE Y-1) (AERIALLY DEPOSITED LEAD)

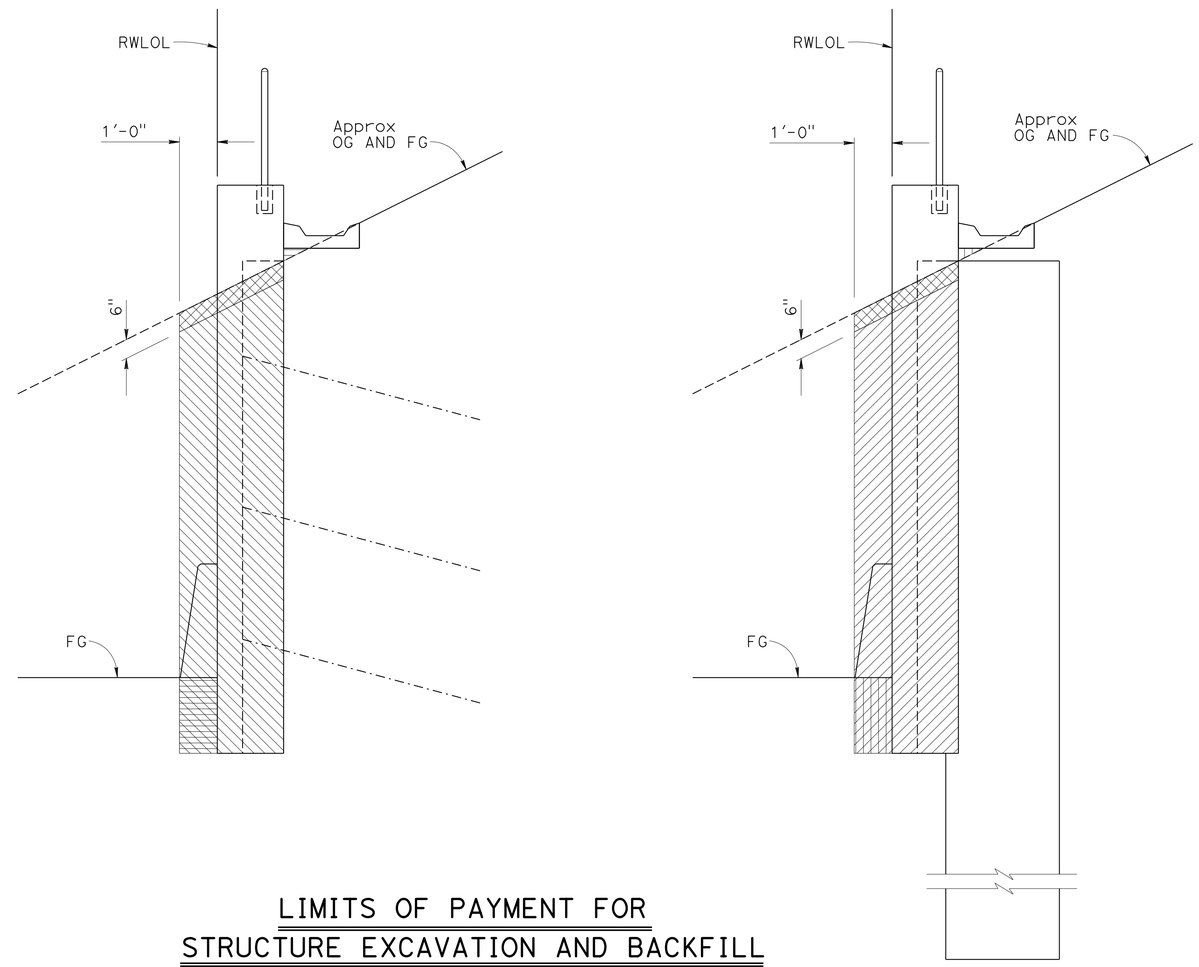

LIMITS OF PAYMENT FOR STRUCTURE EXCAVATION AND BACKFILL

NO SCALE

DESIGN	BY WEI-KUNG HSIA	CHECKED RUI WANG	
DETAILS	BY HENGAMEH MAHBOOBI	CHECKED RUI WANG	
QUANTITIES	BY ARNEL VEGA	CHECKED RUI WANG	

STATE OF CALIFORNIA DEPARTMENT OF TRANSPORTATION

DIVISION OF ENGINEERING SERVICES STRUCTURE DESIGN DESIGN BRANCH 19

BRIDGE NO. 55E0149
POST MILE 8.8

RETAINING WALL NO. 519
MISCELLANEOUS DETAILS

STRUCTURES DESIGN DETAIL SHEET (ENGLISH) (REV. 09-01-10)

ORIGINAL SCALE IN INCHES FOR REDUCED PLANS 0 1 2 3

UNIT: 3621
PROJECT NUMBER & PHASE: 1200000078 - 1 CONTRACT NO.: 12-0C5601

DISREGARD PRINTS BEARING EARLIER REVISION DATES

REVISION DATES 01/22/12 01/08/13 01/22/13

SHEET 9 OF 11

FILE => 55e-0149-rw519-r-dde101.dgn

USERNAME => s121614 DATE PLOTTED => 24-APR-2013 TIME PLOTTED => 11:52

DIST	COUNTY	ROUTE	POST MILES TOTAL PROJECT	SHEET No.	TOTAL SHEETS
12	Ora	91	8.1/9.3,10.1	356	357

Kristopher Barker 1-24-13
CERTIFIED ENGINEERING GEOLOGIST DATE

4-15-13
PLANS APPROVAL DATE

PROFESSIONAL GEOLOGIST Kristopher Barker No. 2383 Exp. 8-31-13 CERTIFIED ENGINEERING GEOLOGIST STATE OF CALIFORNIA

The State of California or its officers or agents shall not be responsible for the accuracy or completeness of electronic copies of this plan sheet.

This LOTB sheet was prepared in accordance with the Caltrans Soil & Rock Logging, Classification, & Presentation Manual (2010 Edition).

See 2010 Standard Plans A10F and A10G for Soil Legend, and A10H for Rock Legend.

BENCH MARK

Described by OCS 2002- Found 3¾" OCS Aluminum benchmark disk stamped "1L-64-82", set in the top of a 6 IN. by 6 IN. concrete post. Monument is located along the southerly side of the Santa Ana River, 0.25 miles northerly along the southerly Levee from the centerline of Tustin Avenue, 17.8 ft. southerly of the centerline of the bike trail and 1.5 ft. northerly from an OCS steel witness post. Monument is set level with the sidewalk.
Elevation: 252.454′ (NAVD 88)
OCS control Index map: Q07-02
City/location: Anaheim

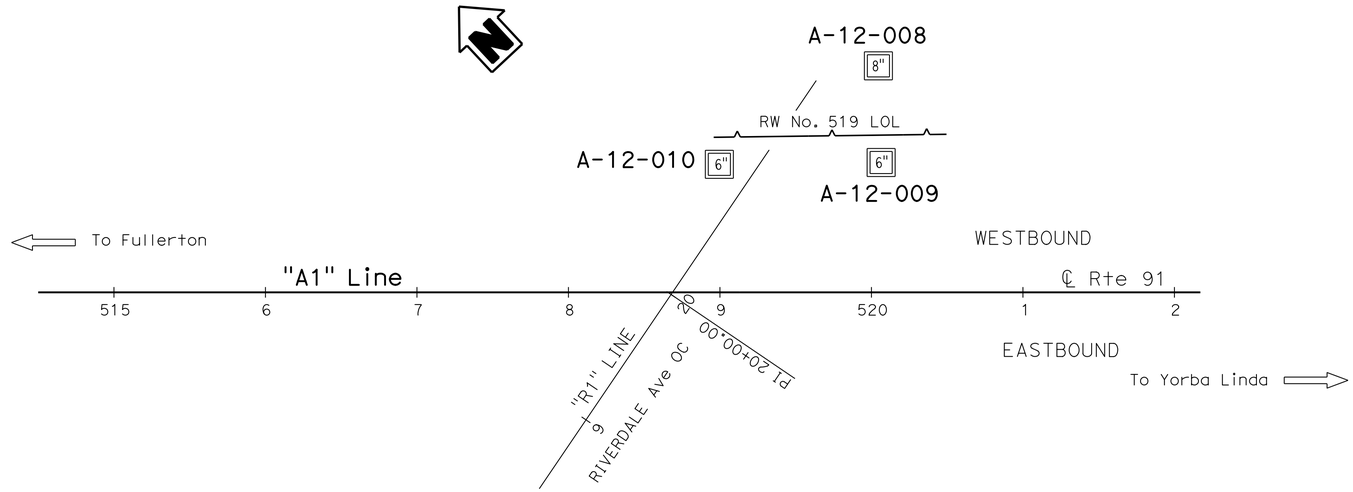

Note: Perched ground water was encountered near elevation 224′ in borings A-12-010 and A-12-009 during field investigation.

PROFILE

Horiz: 1" = 10′
Vert: 1" = 10′

ENGINEERING SERVICES	MATERIALS AND GEOTECHNICAL SERVICES	STATE OF CALIFORNIA DEPARTMENT OF TRANSPORTATION	DIVISION OF ENGINEERING SERVICES STRUCTURE DESIGN DESIGN BRANCH 19	BRIDGE NO. 55E1049 POST MILE 8.8	RETAINING WALL NO. 519 LOG OF TEST BORINGS 1 OF 2
FUNCTIONAL SUPERVISOR NAME: S. Karimi	DRAWN BY: F. Nguyen CHECKED BY: A. Mehrazar	FIELD INVESTIGATION BY: K. Barker			

OGS CIVIL LOG OF TEST BORINGS SHEET — ORIGINAL SCALE IN INCHES FOR REDUCED PLANS 0 1 2 3 — UNIT: 3643 PROJECT NUMBER & PHASE: 12000000781 CONTRACT NO.: 12-0C5601 — DISREGARD PRINTS BEARING EARLIER REVISION DATES — REVISION DATES 10-16-12 11-15-12 01-22-13 — SHEET 10 OF 11

FILE => 55e-0149-rw519-z-1tb01.dgn

USERNAME => s121614 DATE PLOTTED => 24-APR-2013 TIME PLOTTED => 11:52

DIST	COUNTY	ROUTE	POST MILES TOTAL PROJECT	SHEET No.	TOTAL SHEETS
12	Ora	91	8.1/9.3,10.1	357	357

Kristopher Barker 1-24-13
CERTIFIED ENGINEERING GEOLOGIST DATE

4-15-13
PLANS APPROVAL DATE

PROFESSIONAL GEOLOGIST Kristopher Barker No. 2383 Exp. 8-31-13 CERTIFIED ENGINEERING GEOLOGIST STATE OF CALIFORNIA

The State of California or its officers or agents shall not be responsible for the accuracy or completeness of electronic copies of this plan sheet.

This LOTB sheet was prepared in accordance with the Caltrans Soil & Rock Logging, Classification, & Presentation Manual (2010 Edition).

See 2010 Standard Plans A10F and A10G for Soil Legend, and A10H for Rock Legend.

FOR PLAN VIEW, SEE
"LOG OF TEST BORINGS 1 OF 2"

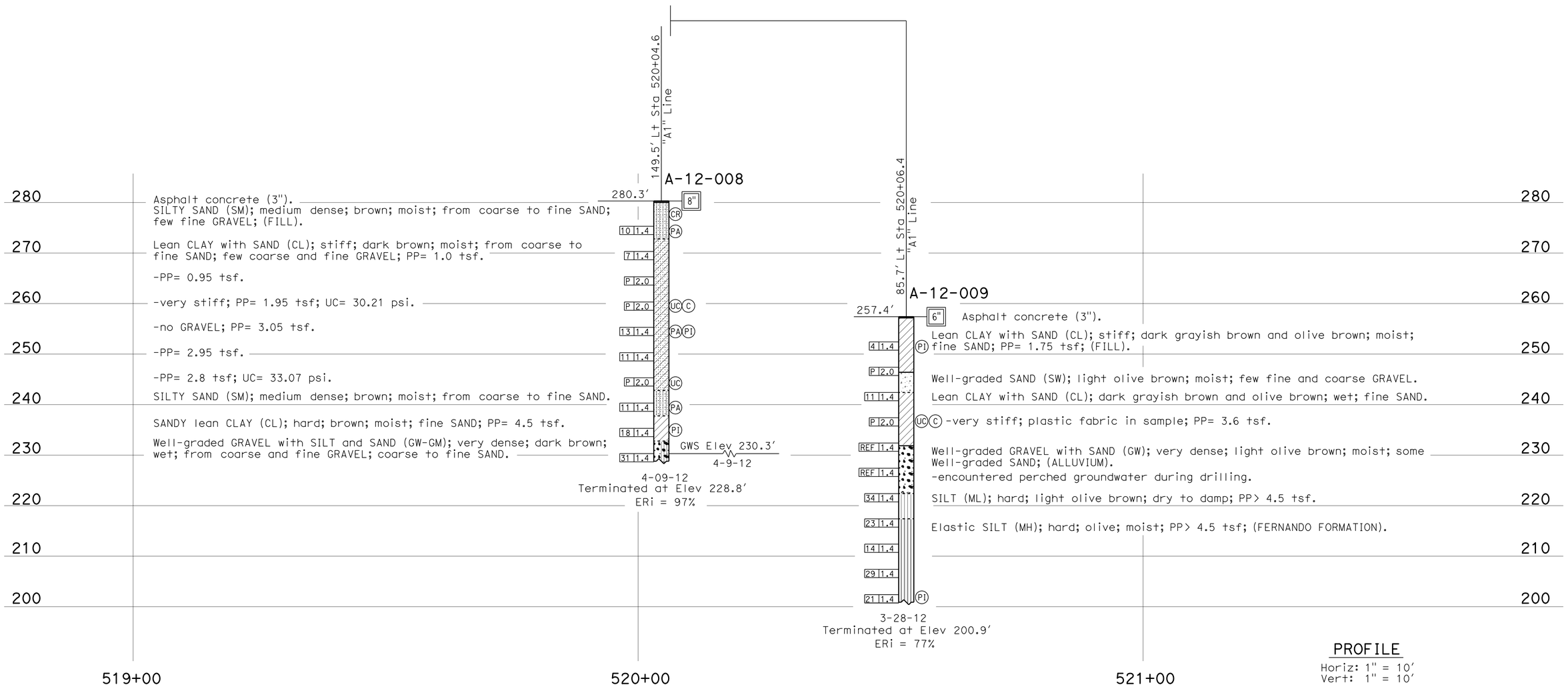

PROFILE
Horiz: 1" = 10'
Vert: 1" = 10'

ENGINEERING SERVICES	MATERIALS AND GEOTECHNICAL SERVICES	STATE OF CALIFORNIA DEPARTMENT OF TRANSPORTATION	DIVISION OF ENGINEERING SERVICES STRUCTURE DESIGN DESIGN BRANCH 19	BRIDGE NO. 55E0149 POST MILE 8.8	RETAINING WALL NO. 519
FUNCTIONAL SUPERVISOR NAME: S. Karimi	DRAWN BY: F. Nguyen CHECKED BY: A. Mehrazar	FIELD INVESTIGATION BY: Q. Liao, K. Barker			LOG OF TEST BORINGS 2 OF 2

OGS CIVIL LOG OF TEST BORINGS SHEET

ORIGINAL SCALE IN INCHES FOR REDUCED PLANS 0 1 2 3

UNIT: 3643
PROJECT NUMBER & PHASE: 12000000781 CONTRACT NO.: 12-0C5601

DISREGARD PRINTS BEARING EARLIER REVISION DATES

REVISION DATES: 10-16-12 11-15-12 01-22-13

SHEET 11 OF 11

FILE => 55e-0149-rw519-z-ltb02.dgn

USERNAME => s121614 DATE PLOTTED => 24-APR-2013 TIME PLOTTED => 11:52