Dist	COUNTY	ROUTE	POST MILES TOTAL PROJECT	SHEET No.	TOTAL SHEETS
12	Ora	22,405, 605	R0.3/R0.9, 22.3/24.0,3.0/R1.6	1101	1929

REGISTERED CIVIL ENGINEER 12/22/09 DATE

2-1-10
PLANS APPROVAL DATE

REGISTERED PROFESSIONAL ENGINEER JASON YAW No. C73422 Exp. 12/31/10 CIVIL STATE OF CALIFORNIA

THE STATE OF CALIFORNIA OR ITS OFFICERS OR AGENTS SHALL NOT BE RESPONSIBLE FOR THE ACCURACY OR COMPLETENESS OF ELECTRONIC COPIES OF THIS PLAN SHEET.

TRC
21 TECHNOLOGY Dr
IRVINE, CA 92618

ORANGE COUNTY
TRANSPORTATION AUTHORITY
550 S. MAIN STREET
ORANGE, CA 92863-1584

PLACE HOT MIX ASPHALT DIKE

SHEET No.	STATION	LOCATION	PLACE HMA DIKE (TYPE C)	PLACE HMA DIKE (TYPE D)	PLACE HMA DIKE (TYPE E)	PLACE HMA DIKE (TYPE F)	HOT MIX ASPHALT
			LF	LF	LF	LF	TON
L-2	"A" 399+59.00 TO "A" 400+50.00	R†			48		3.9
	"SB-1" 40+50.00 TO "SB-1" 48+50.00	R†			785		63.7
L-3	"A" 409+68.47 TO "A" 410+59.02	L†			91		6.9
	"A" 409+68.47 TO "SB-2" 50+63.61	R†			96		6.8
	"A" 410+59.02 TO "A" 417+40.00	L†		681			95.8
	"A" 415+25.00 TO "A" 417+00.00	R†			175		13.3
	"SB-1" 48+50.00 TO "SB-1" 50+00.00	R†			50		4.1
	"SB-3" 35+50.00 TO "SB-3" 37+50.00	L†			200		11.5
	"SB-4" 41+94.89 TO "SB-4" 43+20.00	R†				125	12.1
	"SB-5" 5+41.29 TO "SB-5" 8+50.00	R†			295		21.4
L-4	"A" 420+10.00 TO "A" 420+99.00	L†			89		6.8
	"A" 421+55.00 TO "A" 423+90.00	L†				235	9.0
	"A" 423+90.00 TO "A" 424+50.00	L†			85		6.5
	"A" 424+50.00 TO "A" 425+50.00	L†				100	3.8
	"SB-3" 37+50.00 TO "SB-3" 38+00.00	L†			54		3.8
	"SB-3" 38+00.00 TO "SB-3" 39+50.00	L†		150			19.9
	"SB-3" 39+50.00 TO "SB-3" 40+10.00	L†			60		4.3
L-5	"A" 425+50.00 TO "A" 435+80.00	L†				1,030	39.6
	"A" 435+07.74 TO "A" 438+50.00	R†			343		26.1
	"A" 435+80.00 TO "A" 436+65.00	L†			85		4.4
	"A" 436+65.00 TO "A" 438+50.00	L†				185	11.7
L-6	"A" 438+67.72 TO "A" 438+50.00	R†			118		9.0
	"A" 438+50.00 TO "A" 439+20.00	L†			70		5.3
L-7	"A-2" 19+85.00 TO "A-2" 21+50.40	L†			163		12.4
L-8	"A" 463+00.00 TO "A" 463+43.14	R†	43				1.4
	"A" 463+43.14 TO "A" 463+65.85	R†				28	1.1
	"A" 464+11.14 TO "A" 467+44.83	R†				334	12.9
	"A" 464+85.84 TO "A" 466+65.00	L†			180		13.7
	"A" 467+44.83 TO "A" 471+15.00	R†		370			52.1
	"A" 470+14.96 TO "A" 470+80.00	L†	66				2.2
	"A" 470+80.00 TO "A" 471+50.00	L†			70		5.3
	"A" 471+15.00 TO "A" 471+50.00	R†	35				1.1
	"B-2" 55+16.11 TO "B-2" 60+30.17	R†			515		39.2
	"XC-1" 61+98.41 TO "XC-1" 65+00.00	R†				300	4.0
	"XC-1" 61+60.00 TO "XC-1" 61+98.41	R†	40				0.3

SHEET No.	STATION	LOCATION	PLACE HMA DIKE (TYPE C)	PLACE HMA DIKE (TYPE D)	PLACE HMA DIKE (TYPE E)	PLACE HMA DIKE (TYPE F)	HOT MIX ASPHALT
			LF	LF	LF	LF	TON
L-9	"A" 471+50.00 TO "A" 471+70.00	L†			20		1.5
	"A" 471+50.00 TO "A" 471+80.00	R†	30				1.0
	"A" 471+70.00 TO "A" 483+50.00	L†		1,180			166.0
	"A" 471+80.00 TO "A" 473+54.95	R†				175	6.7
	"A" 477+00.12 TO "A" 480+65.00	R†			365		27.8
	"A-3" 43+54.95 TO "A-3" 46+30.00	R†		276			38.8
	"A-3" 46+30.00 TO "A-3" 46+70.74	R†	41				1.3
	"A-3" 46+70.74 TO "A-3" 52+29.80	R†				560	21.6
	"A-3" 47+00.12 TO "A-3" 49+70.68	R†			271		20.7
	"A-3" 52+29.80 TO "A-3" 54+50.00	R†			221		16.8
	"XC-1" 65+00.00 TO "C-2" 6+78.87	R†				1,181	15.8
L-10	"A" 483+50.00 TO "A" 483+68.65	L†			19		1.4
	"A" 483+68.65 TO "A" 489+75.00	L†				607	23.4
	"A" 489+75.00 TO "A" 490+40.00	L†	65				2.1
	"A-1" 95+05.53 TO "A-1" 97+50.00	R†			245		16.2
	"A-3" 54+50.00 TO "A-3" 55+80.00	R†			130		9.9
	"C-1" 23+80.51 TO "C-1" 28+30.66	R†				451	15.1
	"C-2" 12+47.33 TO "C-2" 15+65.00	R†			318		44.8
L-11	"A-1" 97+50.00 TO "A-1" 98+40.97	R†			91		6.0
	"A-1" 103+42.83 TO "A-1" 106+22.26	L†			274		20.9
	"A-3" 65+30.00 TO "A-3" 69+20.00	R†			390		29.7
	"B-1" 16+94.21 TO "B-1" 75+16.00	R†			281		42.4
	"B-1" 19+50.00 TO "B-1" 23+20.80	L†		130			18.3
	"B-1" 21+00.00 TO "B-1" 21+55.77	L†				44	1.7
L-12	"A-1" 112+80.00 TO "A-1" 114+55.73	L†		173			24.3
	"A-1" 114+55.73 TO "A-1" 116+06.61	L†				151	5.8
	"A-1" 115+74.71 TO "A-1" 116+06.61	R†				32	1.2
	"B" 209+57.22 TO "B" 215+50.00	L†				593	22.8
	"B" 209+57.22 TO "B" 215+50.00	R†				593	22.8
L-13	"B" 215+50.00 TO "B" 221+80.00	L†				630	24.2
	"B" 215+50.00 TO "B" 222+50.00	R†				700	26.9
	"B" 221+80.00 TO "B" 222+65.00	L†			85		6.5
	"B" 222+65.00 TO "B" 225+50.00	L†				285	11.0
L-14	"B" 225+50.00 TO "B" 229+20.00	L†				370	14.2
	TOTAL		320	2,960	6,282	8,709	1,245.0

SUMMARY OF QUANTITIES

Q-9

STATE OF CALIFORNIA - DEPARTMENT OF TRANSPORTATION
Caltrans

CONSULTANT FUNCTIONAL SUPERVISOR: ROSS LEW
CALCULATED-DESIGNED BY: JASON YAW
CHECKED BY: DAVID LEW
REVISED BY: DBL
DATE REVISED: 12/22/09

LAST REVISION 12-22-09 | DATE PLOTTED => 04-FEB-2010 | TIME PLOTTED => 10:47

Dist	COUNTY	ROUTE	POST MILES TOTAL PROJECT	SHEET No.	TOTAL SHEETS
12	Ora	22,405, 605	R0.3/R0.9, 22.3/24.0,3.0/R1.6	1102	1929

REGISTERED CIVIL ENGINEER 12/22/09 DATE

2-1-10
PLANS APPROVAL DATE

REGISTERED PROFESSIONAL ENGINEER JASON YAW No. C73422 Exp. 12/31/10 CIVIL STATE OF CALIFORNIA

THE STATE OF CALIFORNIA OR ITS OFFICERS OR AGENTS SHALL NOT BE RESPONSIBLE FOR THE ACCURACY OR COMPLETENESS OF ELECTRONIC COPIES OF THIS PLAN SHEET.

TRC
21 TECHNOLOGY Dr
IRVINE, CA 92618

ORANGE COUNTY
TRANSPORTATION AUTHORITY
550 S. MAIN STREET
ORANGE, CA 92863-1584

METAL BEAM GUARD RAILING

SHEET No.	STATION	LOCATION	MBGR (WOOD POST)	DOUBLE MBGR (WOOD POST)	TRANSITION RAILING (TYPE WB)	ALTERNATIVE IN-LINE TERMINAL SYSTEM	ALTERNATIVE FLARED TERMINAL SYSTEM	TERMINAL ANCHOR ASSEMBLY (TYPE SFT)
			LF	LF	EA	EA	EA	EA
L-1	"A" 395+50.00 TO "A" 398+50.00	Lt	300.0					1
L-2	"A" 398+50.00 TO "A" 408+50.00	Lt	1,000.0					
	"A" 407+54.82 TO "A" 408+50.00	Rt	99.0				1	
L-3	"A" 408+50.00 TO "A" 408+64.00	Rt	14.0					1
	"A" 416+59.20 TO "A" 417+50.00	Rt	90.8				1	
	"SB" 50+36.00 "SB" 50+61.00	Rt	25.0		1		1	
	"A" 408+50.00 TO "SB-2" 57+50.00	Lt	885.0					
	"SB-2" 50+63.61 TO "SB-2" 53+97.40	Rt		337.5		1		1
	"SB-4" 37+65.75 TO "SB-4" 39+73.22	Lt	213.0				1	1
	"SB-4" 39+00.00 TO "SB-4" 40+28.82	Rt	100.0				1	1
	"SB-4" 41+94.89 TO "SB-4" 42+95.00	Rt	100.5		1		1	
L-4	"A" 417+50.00 TO "A" 425+50.00	Rt	821.2					
	"A" 421+80.00 TO "A" 425+50.00	Lt	376.0		1			
L-5	"A" 425+50.00 TO "A" 438+50.00	Lt	1,305.0					
	"A" 425+50.00 TO "A" 429+25.00	Rt	369.0		1			
	"OR" 14+25.00 TO "OR" 14+99.54	Rt	75.0		1		1	
L-6	"A" 450+45.00 TO "A" 451+50.00	Rt	98.0				1	
	"A" 450+43.27 TO "A" 451+50.00	Lt	113.5					1
	"A" 438+50.00 TO "A" 439+24.61	Lt	75.0				1	
	"A" 447+50.00 TO "A" 447+96.76	Lt	50.0				1	1
	"C-3" 39+80.00 TO "C-3" 41+30.05	Lt	50.0				1	1
L-7	"A" 451+50.00 TO "A" 455+25.00	Lt	399.0				1	
	"A" 451+50.00 TO "A" 454+32.10	Rt	265.0					1
	"C-3" 34+65.34 TO "C-3" 35+90.02	Rt	125.0		1		1	
	"C-3" 34+70.00 TO "C-3" 35+45.02	Lt	75.0				1	1
L-8	"A" 463+43.14 TO "A" 464+11.14	Rt			1		1	
	"A" 464+11.14 TO "A" 467+44.83	Rt	237.5			1		1
	"A" 469+39.99 TO "A" 470+14.96	Lt	75.0		1		1	
	"B-2" 50+00.00 TO "B-2" 59+49.23	Lt	957.0					1
	"B-2" 57+05.00 TO "B-2" 58+29.23	Rt	175.0				1	1
	"XC-1" 54+80.00 TO "XC-1" 55+67.50	Rt	87.5				1	1
	"XC-1" 61+98.41 TO "XC-1" 64+91+99	Rt	294.0				1	

SHEET No.	STATION	LOCATION	MBGR (WOOD POST)	DOUBLE MBGR (WOOD POST)	TRANSITION RAILING (TYPE WB)	ALTERNATIVE IN-LINE TERMINAL SYSTEM	ALTERNATIVE FLARED TERMINAL SYSTEM	TERMINAL ANCHOR ASSEMBLY (TYPE SFT)
			LF	LF	EA	EA	EA	EA
L-9	"A" 471+80.00 TO "C-3" 43+54.95	Rt	175.0				1	1
	"A-3" 46+70.74 TO "A-3" 52+29.80	Rt	550.0				1	1
	"A-3" 51+40.00 TO "A-3" 52+65.00	Lt	125.0				1	1
	"C-1" 6+07.00 TO "C-1" 6+32.00	Lt			1		1	
	"XC-1" 64+91.99 TO "C-2" 6+78.87	Rt	1,181.0		1			
L-10	"A" 483+68.65 TO "A" 489+75.00	Lt	588.0				1	1
	"A" 486+50.00 TO "A" 492+99.42	Rt	675.0				1	1
	"A-1" 91+25.87 TO "A-1" 94+50.00	Lt	325.0		1		1	
	"A-3" 64+25.32 TO "A-3" 64+93.88	Lt	70.0				1	
	"A-3" 64+83.19 TO A-3" 64+83.19	Rt					1	
	"C-1" 23+80.51 TO "C-1" 28+05.66	Rt	362.5					
	"C-1" 28+05.66 TO "C-1" 28+30.66	Rt			1			
	"C-1" 27+61.00 TO "C-1" 28+11.00	Rt	50.0				1	1
	"C-1" 12+49.69 TO "C-2" 17+37.33	Lt	488.0			1		
	"C-2" 17+24.16 TO "C-2" 20+05.39	Rt	281.5					1
	"C-2" 20+05.39 TO "C-2" 20+30.39	Rt			1			
L-11	"A-3" 64+83.19 TO "A-3" 66+35.00	Rt	150.0					1
	"A-3" 64+93.88 TO "A-3" 67+50.00	Lt	255.0					1
	"A-4" 33+67.15 TO "A-4" 33+92.13	Rt			1			
	"B-1" 20+55.77 TO "A-1" 110+65.17	Lt	138.0				1	1
L-12	"A-1" 114+55.73 TO "B" 215+50.00	Lt	742.0					1
	"A-1" 115+74.71 TO "B" 215+50.00	Rt	625.0					
L-13	"B" 215+50.00 TO "B" 225+50.00	Lt	1,005.0					
	"B" 215+50.00 TO "B" 224+00.00	Rt	850.0					1
L-14	"B" 225+50.00 TO "B" 233+90.00	Lt	853.0				1	
L-16	"B" 260+10.00 TO "B" 261+52.00	Rt	148.0					2
L-19	"SB-2" 57+50.00 TO "SB-2" 58+00.00	Lt	50.0					
L-23	"XA-5" 34+29.55 TO "XA-5" 34+54.45	Lt			1			
		TOTAL	18,537.0	337.5	15	3	31	28

SUMMARY OF QUANTITIES

Q-10

STATE OF CALIFORNIA - DEPARTMENT OF TRANSPORTATION
Caltrans

CONSULTANT FUNCTIONAL SUPERVISOR: ROSS LEW
CALCULATED-DESIGNED BY: JASON YAW
CHECKED BY: DAVID LEW
REVISED BY: DBL
DATE REVISED: 12/22/09

LAST REVISION 12-22-09 DATE PLOTTED => 04-FEB-2010 TIME PLOTTED => 10:48

Dist	COUNTY	ROUTE	POST MILES TOTAL PROJECT	SHEET No.	TOTAL SHEETS
12	Ora	22,405, 605	R0.3/R0.9, 22.3/24.0,3.0/R1.6	1103	1929

REGISTERED CIVIL ENGINEER 12/22/09 DATE

2-1-10
PLANS APPROVAL DATE

REGISTERED PROFESSIONAL ENGINEER JASON YAW No. C73422 Exp. 12/31/10 CIVIL STATE OF CALIFORNIA

THE STATE OF CALIFORNIA OR ITS OFFICERS OR AGENTS SHALL NOT BE RESPONSIBLE FOR THE ACCURACY OR COMPLETENESS OF ELECTRONIC COPIES OF THIS PLAN SHEET.

TRC
21 TECHNOLOGY Dr
IRVINE, CA 92618

ORANGE COUNTY
TRANSPORTATION AUTHORITY
550 S. MAIN STREET
ORANGE, CA 92863-1584

IRRIGATION CROSSOVERS

LOCATION		SIDE		CONDUIT TYPE (3)		(N) WATER LINE CROSSOVER	(N) SPRINKLER CONTROL CROSSOVER
LINE	STATION	R†	L†	SIZE (INCH)	LENGTH (LF)	SIZE (INCH)	SIZE (INCH)
A-1	91+40			12	125	4	3
A-2	19+35			12	55	4	3
A-3	53+50			12	50	4	3
A-3	66+50			12	50	4	3
A-4	33+50			12	40	4	3
B-2	58+50			12	50	4	3
C-1	16+40			12	50	4	3
C-2	14+30			12	40	4	3
C-2	17+55			12	40	4	3
C-3	36+00			12	60	4	3
SB	51+00			12	165	4	3
SB	55+19			12	175	4	3
SB-1	48+95			12	45	4	3
SB-2	52+80			12	50	4	3
SB-3	34+75			12	60	4	3
SB-4	38+80			12	70	4	3
SB-5	38+90			12	55	4	3
TOTAL					1,180		

(N) - NOT A SEPARATE PAY ITEM FOR INFORMATION ONLY
X - DENOTES REQUIREMENT

CONDUIT TYPE
(Applicable when circled below and shown under the 'CONDUIT TYPE' column heading)

1 BITUMINOUS COATED CORRUGATED STEEL PIPE CONDUIT (0.064 INCH THICK)
2 CORRUGATED STEEL PIPE (0.064 INCH THICK)
(3) CORRUGATED HIGH DENSITY POLYETHYLENE PIPE
4 ALTERNATIVE CONDUIT

PLASTIC PIPES *

SHEET No.	STATION	LOCATION	2" (LF)	3" (LF)	4" (LF)
L-3	"SB" 48+50.00 TO "SB" 59+84.41	L†		2,270	1,135
	"SB" 48+50.00 TO "SB" 61+97.00	R†	1,347		1,347
L-19	"SB" 41+00.00 TO "SB" 48+50.00	R†	734		734
	"SB" 42+67.89 TO "SB" 48+50.00	L†		1,186	593
		TOTAL	2,081	3,456	3,809

* SMOOTH INTERIOR WALL TYPE

EXTEND IRRIGATION CROSSOVERS

LOCATION		SIDE		EXTEND CONDUIT (3)		CB	OL	(N) WATER LINE CROSSOVER	(N) SPRINKLER CONTROL CROSSOVER
LINE	STATION	R†	L†	SIZE (INCH)	LENGTH (LF)			SIZE (INCH)	SIZE (INCH)
A	459+95	X		10	55		X	4	2
A	459+95		X	10	65		X	4	2
B-2	82+65	X		10	20	X		3	2
B	225+00		X	6	20	X		2½	2
TOTAL				(10")	140				
				(6")	20				

(N) - NOT A SEPARATE PAY ITEM FOR INFORMATION ONLY
X - DENOTES REQUIREMENT

CB - COUPLING BAND
OL - OVERLAP

BACKFILL (SLURRY CEMENT)

SHEET No.	STATION	LOCATION	CY
L-1	"A" 395+50.00 TO "A" 398+50.00	L†	10
L-2	"A" 398+50.00 TO "A" 404+35.00	L†	18
	"SB-2" 44+35.00 TO "SB-2" 48+50.13	L†	13
L-3	"SB-2" 48+50.13 TO "SB-2" 51+72.00	L†	10
		TOTAL	51

VEGETATION CONTROL (MINOR CONCRETE)

SHEET No.	STATION	LOCATION	SQYD
L-10	"C-1" 27+22.50 TO "C-1" 28+11.00	L†	48

SUMMARY OF QUANTITIES

Q-11

REVISED BY	DATE REVISED
DBL	12/22/09

JASON YAW
DAVID LEW
CALCULATED-DESIGNED BY
CHECKED BY
ROSS LEW
CONSULTANT FUNCTIONAL SUPERVISOR

STATE OF CALIFORNIA - DEPARTMENT OF TRANSPORTATION
Caltrans

LAST REVISION 12-22-09
DATE PLOTTED => 04-FEB-2010
TIME PLOTTED => 10:48

Dist	COUNTY	ROUTE	POST MILES TOTAL PROJECT	SHEET No.	TOTAL SHEETS
12	Ora	22,405, 605	R0.3/R0.9, 22.3/24.0,3.0/R1.6	1104	1929

REGISTERED CIVIL ENGINEER 12/22/09 DATE

2-1-10
PLANS APPROVAL DATE

REGISTERED PROFESSIONAL ENGINEER JASON YAW No. C73422 Exp. 12/31/10 CIVIL STATE OF CALIFORNIA

THE STATE OF CALIFORNIA OR ITS OFFICERS OR AGENTS SHALL NOT BE RESPONSIBLE FOR THE ACCURACY OR COMPLETENESS OF ELECTRONIC COPIES OF THIS PLAN SHEET.

TRC
21 TECHNOLOGY Dr
IRVINE, CA 92618

ORANGE COUNTY
TRANSPORTATION AUTHORITY
550 S. MAIN STREET
ORANGE, CA 92863-1584

ROADWAY EXCAVATION (AERIALLY DEPOSITED LEAD)

SHEET No.	STATION	LOCATION	ROADWAY EXCAVATION (TYPE Y-1)	ROADWAY EXCAVATION (TYPE Y-2)	ROADWAY EXCAVATION (TYPE Z-3)
			CY	CY	CY
C-22	"A" 395+50 TO "A" 398+50	L†	358		
	"A" 395+50 TO "A" 396+25	R†			23
C-23	"A" 398+60 TO "SB-1" 43+25	R†	114		
	"A" 403+25 TO "A" 407+10	L†			224
	"A" 407+10 TO "A" 408+50	R†	790		
	"SB-2" 47+50 TO "SB-2" 48+50	L†	133		
C-24	"A" 408+50 TO "A" 410+43	R†	807		
	"A" 410+00 TO "A" 414+00	L†		328	
	"A" 411+50 TO "A" 416+50	R†			1,190
	"A" 416+50 TO "A" 417+50	R†			199
	"SB" 57+50 TO "SB" 60+18	L†	371		
	"SB-2" 48+50 TO "SB-2" 51+00	L†	177		
	"SB-3" 29+00 TO "SB-3" 35+15	R†	107		
	"SB-4" 36+81 TO "SB-4" 39+20	L†	110		
	"SB-5" 5+18 TO "SB-5" 9+00	L†			78
	"SB-5" 9+00 TO "SB-4" 40+00	R†			640
C-25	"A" 417+50 TO "A" 419+60	R†			281
	"A" 419+60 TO "A" 425+50	R†	1,212		
	"SB-3" 38+00 TO "A" 422+75	L†	642		
C-26	"A" 425+50 TO "A" 430+00	R†	886		
	"A" 438+24 TO "A" 438+50	R†			29
C-27	"A" 438+50 TO "A" 441+50	R†			391
	"A" 439+00 TO "C-3" 45+50	L†	646		
	"A" 441+50 TO "A" 451+50	R†	687		
	"A" 446+10 TO "A" 451+50	L†		1,208	
	"A-2" 21+60 TO "A-2" 22+00	L†	11		
C-28	"A" 451+50 TO "A" 458+50	R†	461		
	"A-2" 16+50 TO "A-2" 21+60	L†	138		
C-29	"A" 458+50 TO "B-1" 59+50	L†		618	
	"A" 458+50 TO "A" 464+50	R†	234		
	"A" 470+00 TO "A" 471+50	R†			64
C-30	"A" 471+50 TO "A-3" 44+00	R†			139
	"A" 477+00 TO "A" 481+00	L†	50		
C-31	"A-3" 54+50 TO "A-1" 56+80	R†	154		
	"A-3" 61+50 TO "A-3" 64+14	R†	59		
C-32	"A-1" 106+13 TO "A-3" 111+00	R†		91	
C-33	"A-1" 113+10 TO "B" 210+30	R†		138	
C-34	"B" 215+50 TO "B" 220+50	R†		265	
C-35	"B" 249+00 TO "B" 250+50.29	R†	29		
	"B" 250+50.29 TO "B" 254+10.02	R†		69	
	"B" 252+64.06 TO "B" 257+22.02	L†	81		
	"B" 254+10.02 TO "B" 257+51.06	R†	326		
	"B" 259+56.63 TO "B" 263+49.21	R†	75		
	"B" 261+64.31 TO "B" 263+49.54	L†	33		
		TOTAL	8,691	2,717	3,258

ROADWAY EXCAVATION

SHEET No.	STATION	ROADWAY EXCAVATION	(N) EMBANKMENT	IMPORT BORROW
		CY	CY	CY
L-1	"A" 395+50.00 TO "A" 398+50.00	3,047	28	3,181
L-2	"A" 398+50.00 TO "A" 408+50.00	21,756	247	13,409
L-3	"A" 408+50.00 TO "A" 417+50.00	61,268	41,904	42,844
L-4	"A" 417+50.00 TO "A" 425+50.00	10,822	765	11,220
L-5	"A" 425+50.00 TO "A" 438+50.00	16,589	3,522	12,804
L-6	"A" 438+50.00 TO "A" 451+50.00	108,020	37,804	15,046
L-7	"A" 451+50.00 TO "A" 458+50.00	19,655	47,129	7,219
L-8	"A" 458+50.00 TO "A" 471+50.00	17,507	49,267	
L-9	"A" 471+50.00 TO "A" 483+50.00	31,073	17,331	4,817
L-10	"A-1" 84+25.00 TO "A-1" 97+50.00	16,477	36,778	9,798
L-11	"A-1" 97+50.00 TO "A-1" 111+00.00	25,355	7,880	14,874
L-12	"A-1" 111+00.00 TO "A-1" 116+06.61 "B" 209+57.22 TO "B" 215+50.00	9,307	7,650	4,079
L-13	"B" 215+50.00 TO "B" 225+50.00	4,702	5,044	
L-14	"B" 225+50.00 TO "B" 233+30.00	2,560	2,567	
L-18	"A-2" 10+00.00 TO "A-2" 16+50.00	3,376	2,943	3,567
L-19	"SB" 42+90.00 TO "SB" 48+50.00	4,147	2,625	5,808
	TOTAL	355,661	263,484	148,666

(N) FOR INFORMATION ONLY. NOT A PAY ITEM.

ADJUST MANHOLE TO GRADE

SHEET No.	STATION	LOCATION	EA
U-5	"A" 429+08.10	144.97' R†	1
		TOTAL	1

SUMMARY OF QUANTITIES

Q-12

REVISED BY	DATE REVISED	JASON YAW	DAVID LEW	CALCULATED-DESIGNED BY	CHECKED BY	CONSULTANT FUNCTIONAL SUPERVISOR	ROSS LEW
DBL	12/22/09						

STATE OF CALIFORNIA - DEPARTMENT OF TRANSPORTATION
Caltrans

LAST REVISION 12-22-09 DATE PLOTTED => 04-FEB-2010 TIME PLOTTED => 10:48

Dist	COUNTY	ROUTE	POST MILES TOTAL PROJECT	SHEET No.	TOTAL SHEETS
12	Ora	22,405, 605	R0.3/R0.9, 22.3/24.0,3.0/R1.6	1105	1929

David Lew 8/10/09
REGISTERED CIVIL ENGINEER DATE

2-1-10
PLANS APPROVAL DATE

REGISTERED PROFESSIONAL ENGINEER DAVID LEW No. C59063 Exp. 6/30/11 CIVIL STATE OF CALIFORNIA

THE STATE OF CALIFORNIA OR ITS OFFICERS OR AGENTS SHALL NOT BE RESPONSIBLE FOR THE ACCURACY OR COMPLETENESS OF ELECTRONIC COPIES OF THIS PLAN SHEET.

TRC
21 TECHNOLOGY Dr
IRVINE, CA 92618

ORANGE COUNTY
TRANSPORTATION AUTHORITY
550 S. MAIN STREET
ORANGE, CA 92863-1584

LINE INDEX

LINE	DESCRIPTION
"A"	ROUTE 405
"A-1"	405/605 HOV CONNECTOR
"A-2"	N405-W22 CONNECTOR
"A-3"	N405-N605 CONNECTOR
"A-4"	S405-N605 CONNECTOR
"B"	ROUTE 605
"B-1"	S605-N405 CONNECTOR
"B-2"	S605-S405 CONNECTOR
"C-1"	E22-N605 CONNECTOR
"C-2"	E22-N405 CONNECTOR
"C-3"	E22-S405 CONNECTOR
"XA-5"	EXISTING S405-W22 CONNECTOR
"XB-3"	EXISTING S605-W22 CONNECTOR
"SB"	SEAL BEACH Blvd
"SB-1"	NB SEAL BEACH Blvd OFF-RAMP
"SB-2"	SB SEAL BEACH Blvd ON-RAMP
"SB-3"	SB SEAL BEACH Blvd OFF-RAMP
"SB-4"	NB SEAL BEACH Blvd LOOP ON-RAMP
"SB-5"	NB SEAL BEACH Blvd ON-RAMP
"OR"	NB OLD RANCH Pkwy ON-RAMP

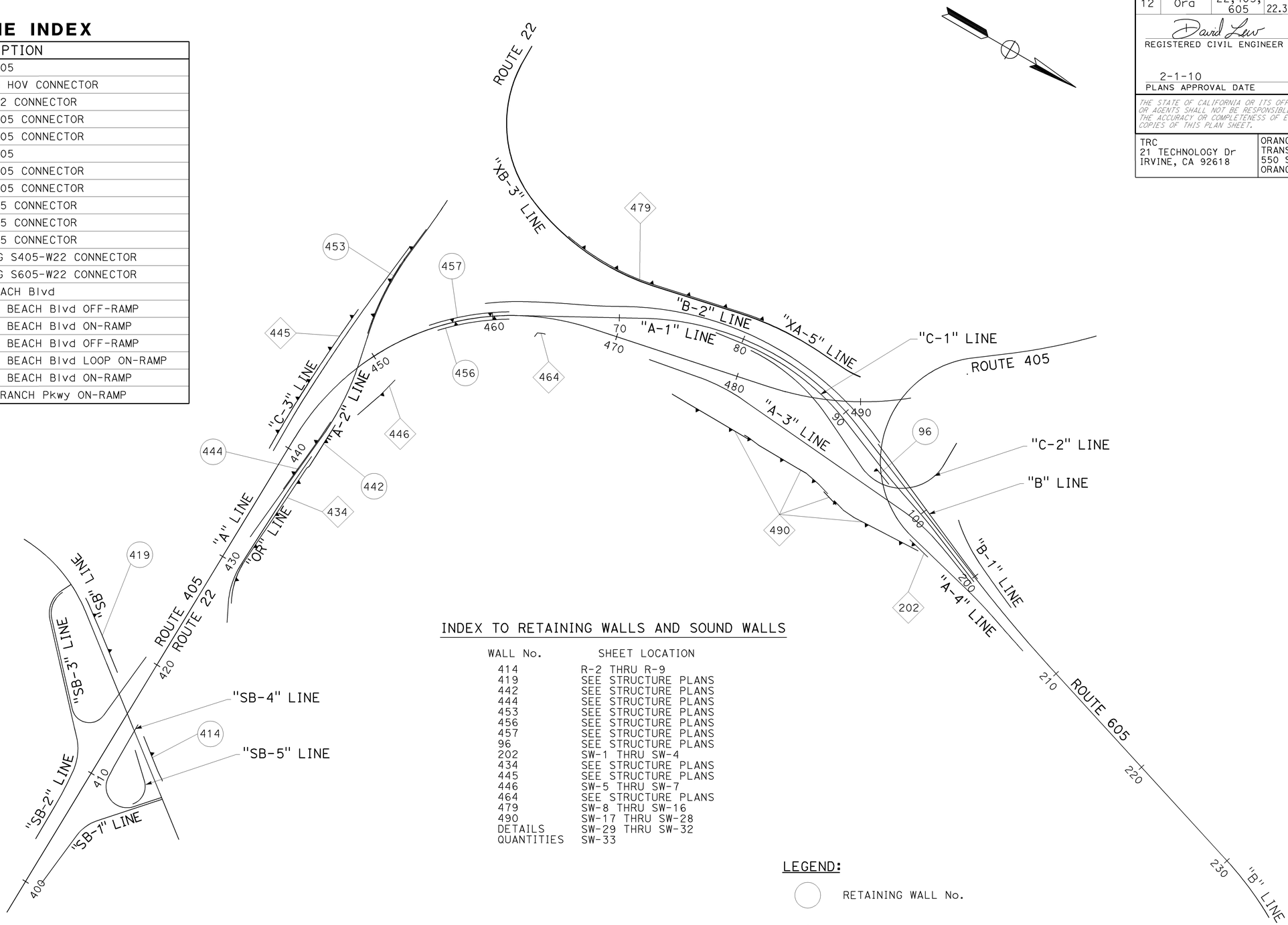

INDEX TO RETAINING WALLS AND SOUND WALLS

WALL No.	SHEET LOCATION
414	R-2 THRU R-9
419	SEE STRUCTURE PLANS
442	SEE STRUCTURE PLANS
444	SEE STRUCTURE PLANS
453	SEE STRUCTURE PLANS
456	SEE STRUCTURE PLANS
457	SEE STRUCTURE PLANS
96	SEE STRUCTURE PLANS
202	SW-1 THRU SW-4
434	SEE STRUCTURE PLANS
445	SEE STRUCTURE PLANS
446	SW-5 THRU SW-7
464	SEE STRUCTURE PLANS
479	SW-8 THRU SW-16
490	SW-17 THRU SW-28
DETAILS	SW-29 THRU SW-32
QUANTITIES	SW-33

LEGEND:

RETAINING WALL No.

SOUND WALL No.

RETAINING WALL PLAN (INDEX MAP)

NO SCALE

R-1

THIS PLAN ACCURATE FOR RETAINING AND SOUND WALL WORK ONLY.

STATE OF CALIFORNIA - DEPARTMENT OF TRANSPORTATION
Caltrans

CONSULTANT FUNCTIONAL SUPERVISOR: ROSS LEW
CALCULATED-DESIGNED BY: NICK POLICHETTI / HAI TRAN
CHECKED BY: KEVIN MICHALSKI
REVISED BY: DBL
DATE REVISED: 8/10/09

LAST REVISION: 08-10-09
DATE PLOTTED => 04-FEB-2010
TIME PLOTTED => 10:48

Dist	COUNTY	ROUTE	POST MILES TOTAL PROJECT	SHEET No.	TOTAL SHEETS
12	Ora	22,405, 605	R0.3/R0.9, 22.3/24.0,3.0/R1.6	1106	1929

REGISTERED CIVIL ENGINEER 8/10/09 DATE

2-1-10
PLANS APPROVAL DATE

REGISTERED PROFESSIONAL ENGINEER ROSS E. LEW No. C53399 Exp. 6/30/11 CIVIL STATE OF CALIFORNIA

THE STATE OF CALIFORNIA OR ITS OFFICERS OR AGENTS SHALL NOT BE RESPONSIBLE FOR THE ACCURACY OR COMPLETENESS OF ELECTRONIC COPIES OF THIS PLAN SHEET.

TRC
21 TECHNOLOGY Dr
IRVINE, CA 92618

ORANGE COUNTY
TRANSPORTATION AUTHORITY
550 S. MAIN STREET
ORANGE, CA 92863-1584

NOTE:

1. FOR CONCRETE BARRIER AND FRACTURED RIB TEXTURE DETAILS, SEE SHEET R-9.

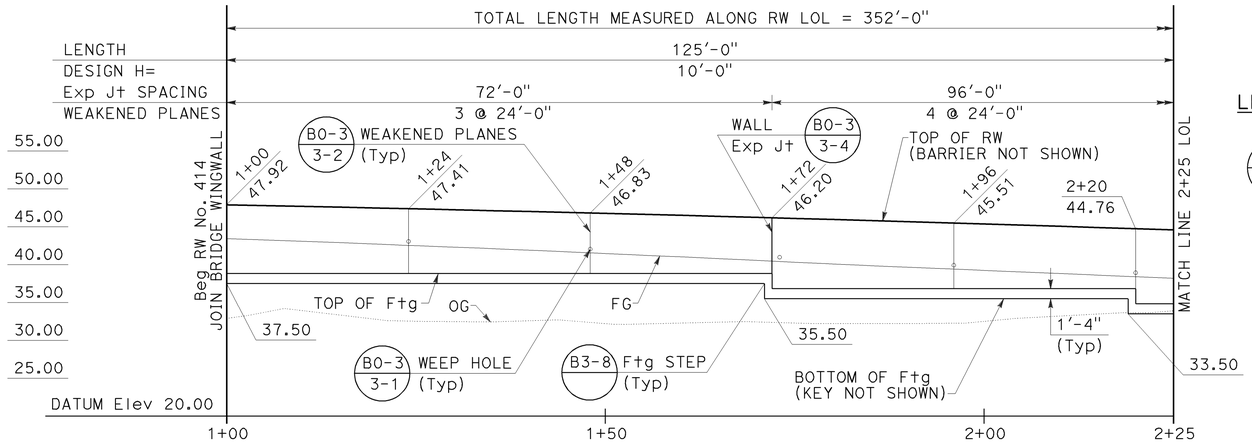

MIRROR ELEVATION

SCALE: 1" = 10'

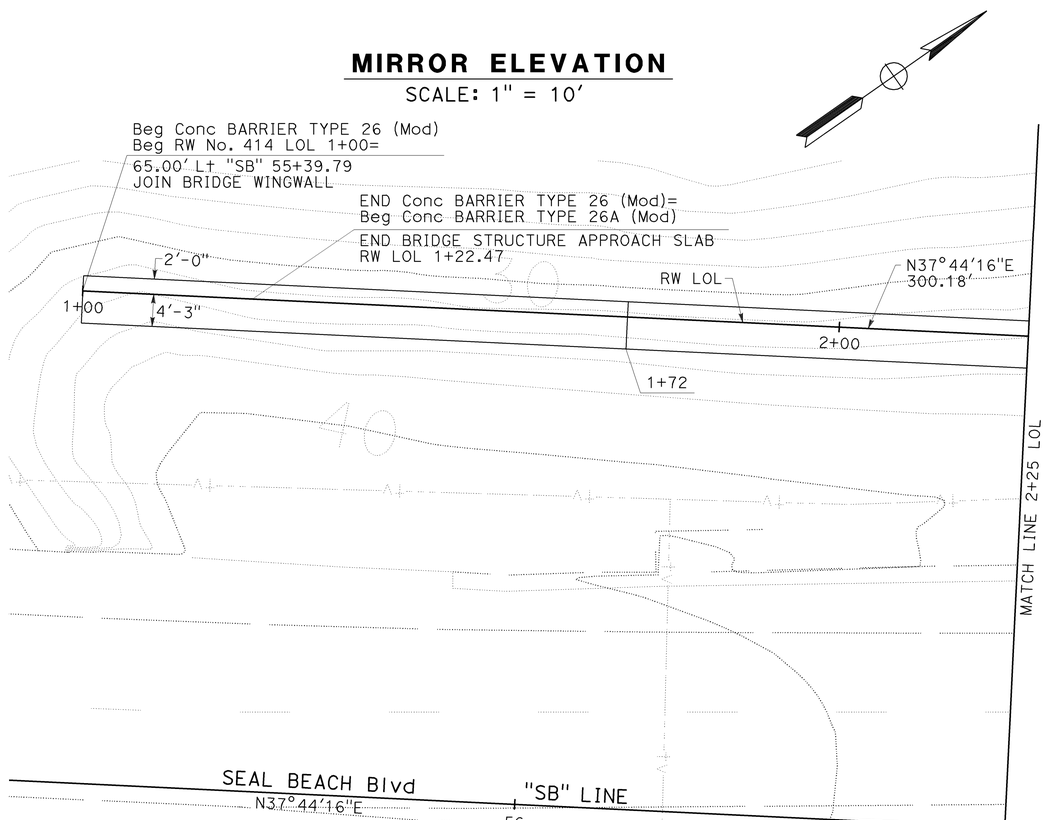

PLAN

SCALE: 1" = 10'

LEGEND:

STANDARD PLAN SHEET NUMBER

DETAIL NUMBER

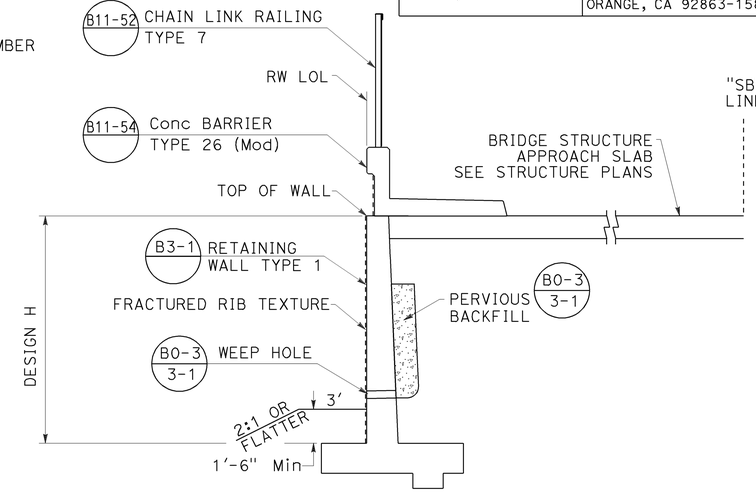

TYPICAL SECTION

(Sta 1+00 TO 1+22.47)
NO SCALE

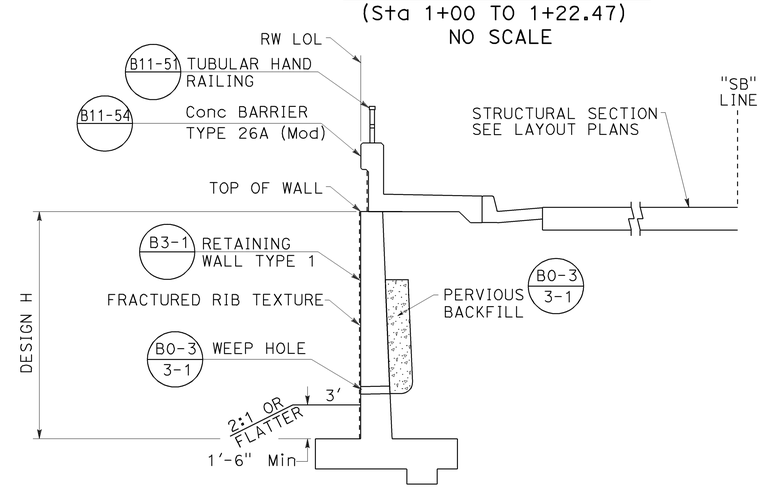

TYPICAL SECTION

(Sta 1+22.47 TO 4+52.00)
NO SCALE

RETAINING WALL PLAN
RW No. 414

SCALE AS SHOWN

R-2

THIS PLAN ACCURATE FOR RETAINING WALL WORK ONLY.

STATE OF CALIFORNIA - DEPARTMENT OF TRANSPORTATION
Caltrans

CONSULTANT FUNCTIONAL SUPERVISOR: ROSS LEW
CALCULATED-DESIGNED BY: NICK POLICHETTI / HAI TRAN
CHECKED BY: KEVIN MICHALSKI
REVISED BY: DBL
DATE REVISED: 8/10/09

LAST REVISION 08-10-09 DATE PLOTTED => 04-FEB-2010 TIME PLOTTED => 10:48

Dist	COUNTY	ROUTE	POST MILES TOTAL PROJECT	SHEET No.	TOTAL SHEETS
12	Ora	22,405, 605	R0.3/R0.9, 22.3/24.0,3.0/R1.6	1107	1929

REGISTERED CIVIL ENGINEER 8/10/09 DATE

2-1-10
PLANS APPROVAL DATE

REGISTERED PROFESSIONAL ENGINEER ROSS E. LEW No. C53399 Exp. 6/30/11 CIVIL STATE OF CALIFORNIA

THE STATE OF CALIFORNIA OR ITS OFFICERS OR AGENTS SHALL NOT BE RESPONSIBLE FOR THE ACCURACY OR COMPLETENESS OF ELECTRONIC COPIES OF THIS PLAN SHEET.

TRC
21 TECHNOLOGY Dr
IRVINE, CA 92618

ORANGE COUNTY
TRANSPORTATION AUTHORITY
550 S. MAIN STREET
ORANGE, CA 92863-1584

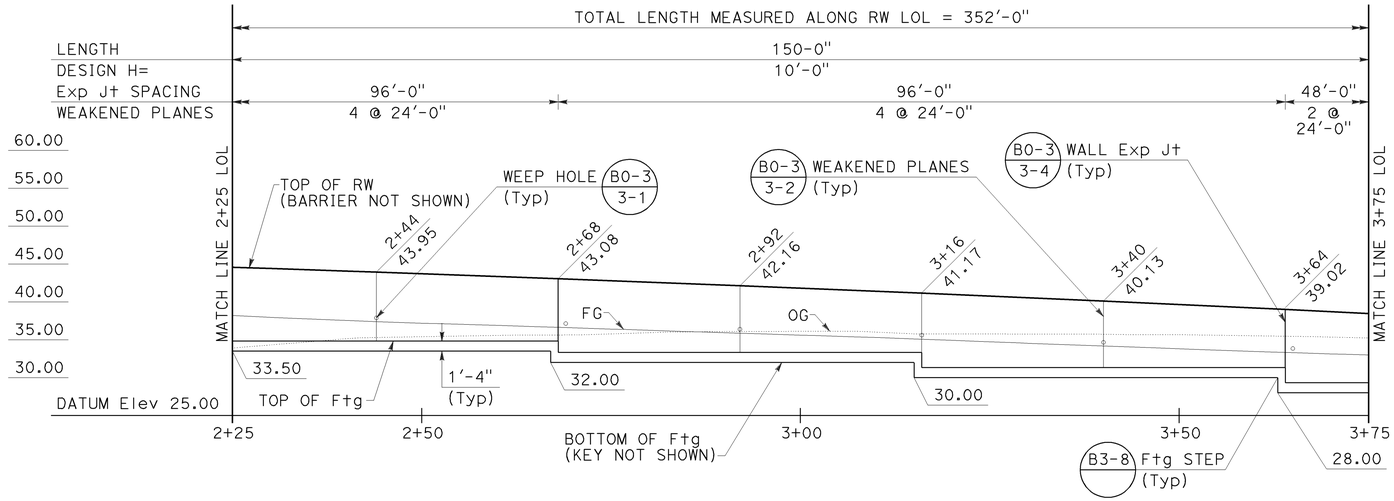

MIRROR ELEVATION

SCALE: 1" = 10'

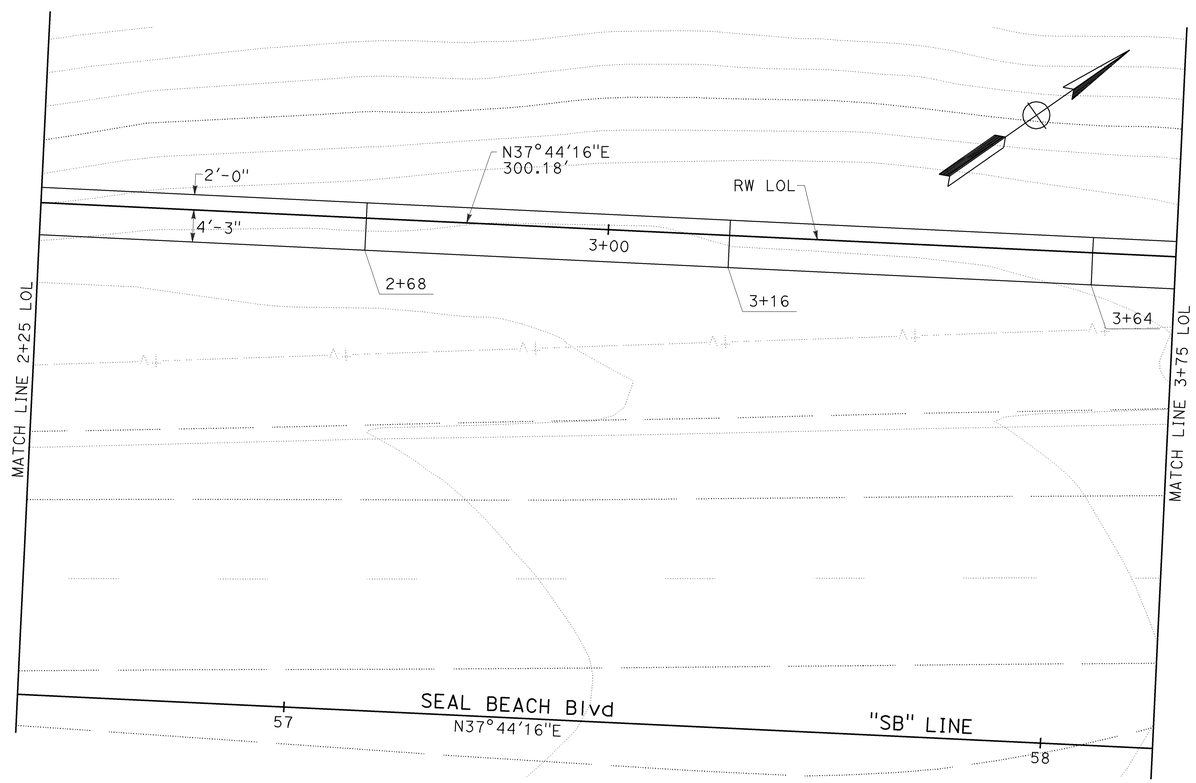

PLAN

SCALE: 1" = 10'

RETAINING WALL PLAN
RW No. 414

SCALE AS SHOWN

R-3

THIS PLAN ACCURATE FOR RETAINING WALL WORK ONLY.

STATE OF CALIFORNIA - DEPARTMENT OF TRANSPORTATION
Caltrans

CONSULTANT FUNCTIONAL SUPERVISOR: ROSS LEW
CALCULATED-DESIGNED BY: NICK POLICHETTI / HAI TRAN
CHECKED BY: KEVIN MICHALSKI
REVISED BY: DBL
DATE REVISED: 8/10/09

LAST REVISION 08-10-09
DATE PLOTTED => 04-FEB-2010
TIME PLOTTED => 10:49

Dist	COUNTY	ROUTE	POST MILES TOTAL PROJECT	SHEET No.	TOTAL SHEETS
12	Ora	22,405, 605	R0.3/R0.9, 22.3/24.0,3.0/R1.6	1108	1929

REGISTERED CIVIL ENGINEER 12/22/09 DATE

2-1-10
PLANS APPROVAL DATE

REGISTERED PROFESSIONAL ENGINEER ROSS E. LEW No. C53399 Exp. 6/30/11 CIVIL STATE OF CALIFORNIA

THE STATE OF CALIFORNIA OR ITS OFFICERS OR AGENTS SHALL NOT BE RESPONSIBLE FOR THE ACCURACY OR COMPLETENESS OF ELECTRONIC COPIES OF THIS PLAN SHEET.

TRC
21 TECHNOLOGY Dr
IRVINE, CA 92618

ORANGE COUNTY
TRANSPORTATION AUTHORITY
550 S. MAIN STREET
ORANGE, CA 92863-1584

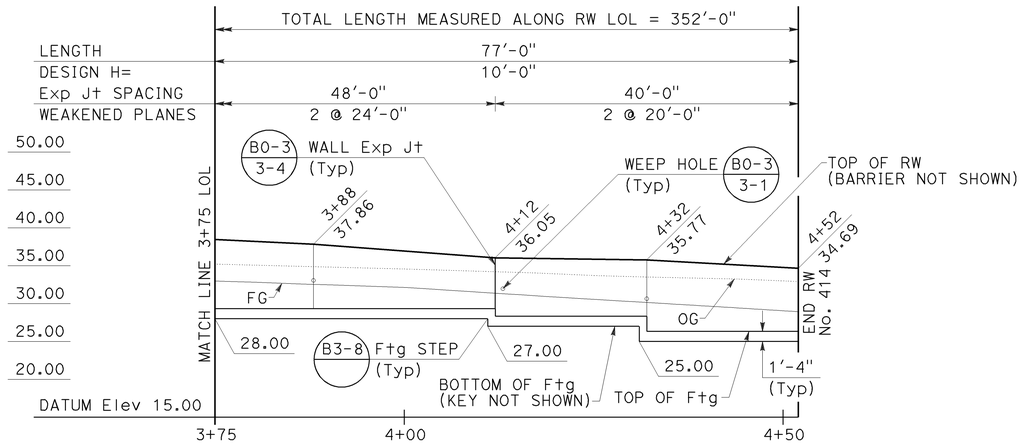

MIRROR ELEVATION

SCALE: 1" = 10'

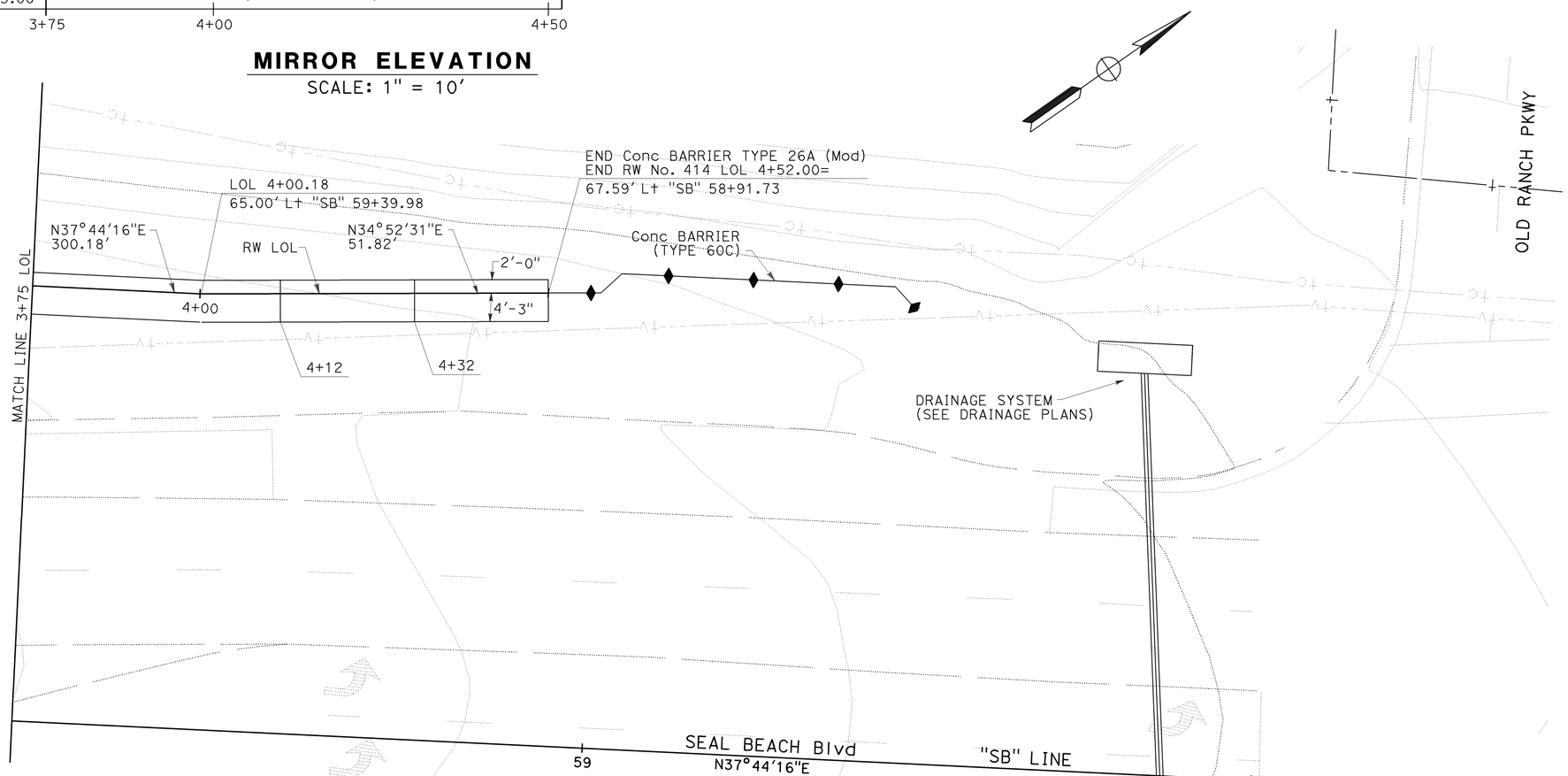

PLAN

SCALE: 1" = 10'

RETAINING WALL PLAN
RW No. 414

SCALE AS SHOWN

R-4

THIS PLAN ACCURATE FOR RETAINING WALL WORK ONLY.

DBL	12/22/09
REVISED BY	DATE REVISED
HAI TRAN	ROSS LEW
CALCULATED-DESIGNED BY	CHECKED BY
CONSULTANT FUNCTIONAL SUPERVISOR	ROSS LEW

STATE OF CALIFORNIA - DEPARTMENT OF TRANSPORTATION

Caltrans

LAST REVISION 12-22-09 | DATE PLOTTED => 04-FEB-2010 | TIME PLOTTED => 10:49

REFERENCE: CALTRANS SOIL & ROCK LOGGING, CLASSIFICATION, AND PRESENTATION MANUAL (JUNE 2007)

Dist	COUNTY	ROUTE	POST MILES TOTAL PROJECT	SHEET No.	TOTAL SHEETS
12	Ora	22,405, 605	R0.3/R0.9, 22.3/24.0,3.0/R1.6	1109	1929

REGISTERED CIVIL ENGINEER 08/10/09 DATE

2-1-10
PLANS APPROVAL DATE

REGISTERED PROFESSIONAL ENGINEER ANDREW V. KORKOS No. GE 2357 Exp. 03/31/10 GEOTECHNICAL STATE OF CALIFORNIA

THE STATE OF CALIFORNIA OR ITS OFFICERS OR AGENTS SHALL NOT BE RESPONSIBLE FOR THE ACCURACY OR COMPLETENESS OF ELECTRONIC COPIES OF THIS PLAN SHEET.

EARTH MECHANICS, INC.
17660 NEWHOPE ST. SUITE E
FOUNTAIN VALLEY, CA 92708

OCTA
550 S. MAIN STREET
ORANGE, CA 92863-1584

CEMENTATION

Description	Criteria
Weak	Crumbles or breaks with handling or little finger pressure.
Moderate	Crumbles or breaks with considerable finger pressure.
Strong	Will not crumble or break with finger pressure.

CONSISTENCY OF COHESIVE SOILS

Description	Unconfined Compressive Strength (tsf)	Pocket Penetrometer Measurement (tsf)	Torvane Measurement (tsf)	Field Approximation
Very Soft	< 0.25	< 0.25	< 0.12	Easily penetrated several inches by fist
Soft	0.25 to 0.50	0.25 to 0.50	0.12 to 0.25	Easily penetrated several inches by thumb
Medium Stiff	0.50 to 1.0	0.50 to 1.0	0.25 to 0.50	Penetrated several inches by thumb with moderate effort
Stiff	1 to 2	1 to 2	0.50 to 1.0	Readily indented by thumb but penetrated only with great effort
Very Stiff	2 to 4	2 to 4	1.0 to 2.0	Readily indented by thumbnail
Hard	> 4.0	> 4.0	> 2.0	Indented by thumbnail with difficulty

BOREHOLE IDENTIFICATION

Symbol	Hole Type	Description
Size	A	Auger Boring
Size	R P	Rotary drilled boring Rotary percussion boring (air)
Size	R	Rotary drilled diamond core
Size	HD HA	Hand driven (1-inch soil tube) Hand Auger
●	D	Dynamic Cone Penetration Boring
▲	CPT	Cone Penetration Test (ASTM D 5778-95)
□	O	Other

Note: Size in inches.

PLASTICITY OF FINE-GRAINED SOILS

Description	Criteria
Nonplastic	A 1/8-inch thread cannot be rolled at any water content.
Low	The thread can barely be rolled and the lump cannot be formed when drier than the plastic limit.
Medium	The thread is easy to roll and not much time is required to reach the plastic limit. The thread cannot be rerolled after reaching the plastic limit. The lump crumbles when drier than the plastic limit.
High	It takes considerable time rolling and kneading to reach the plastic limit. The thread can be rerolled several times after reaching the plastic limit. The lump can be formed without crumbling when drier than the plastic limit.

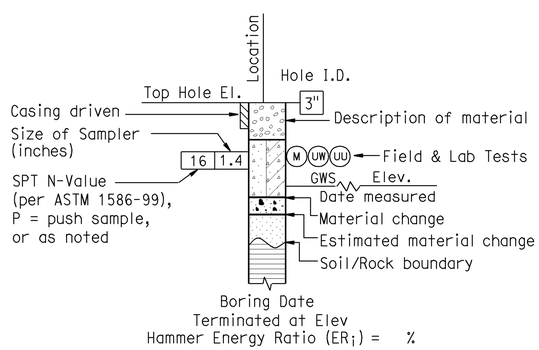

ROTARY BORING

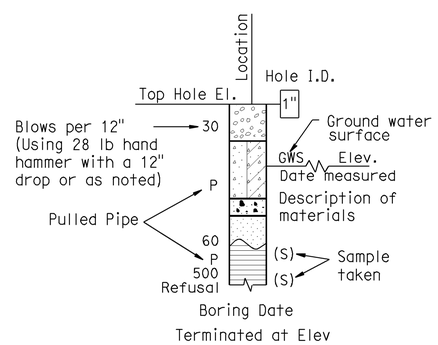

HAND BORING

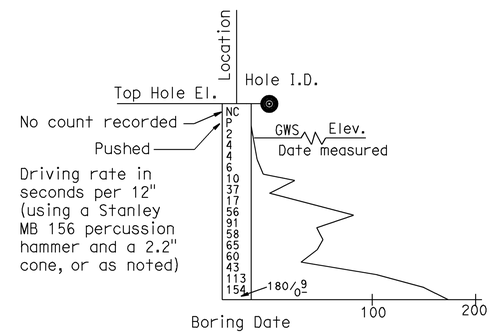

DYNAMIC CONE PENETRATION BORING

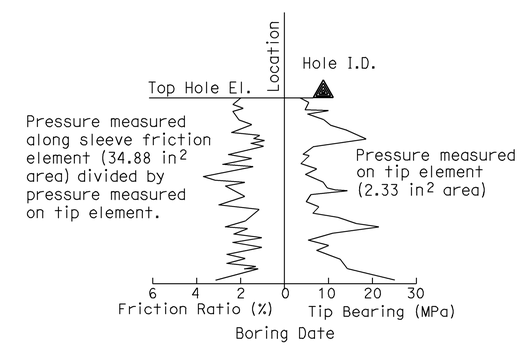

CONE PENETRATION TEST (CPT) SOUNDING

LOG OF TEST BORINGS NO. 1
RW No. 414
SCALE AS SHOWN

R-5

REVISED BY	DATE REVISED
K.P	08/10/09

CALCULATED-DESIGNED BY: J.FANG
CHECKED BY: G.J.GUNARANJAN
CONSULTANT FUNCTIONAL SUPERVISOR: K.ARULMOLI

STATE OF CALIFORNIA - DEPARTMENT OF TRANSPORTATION
Caltrans

LAST REVISION 08-10-09 | DATE PLOTTED => 04-FEB-2010 | TIME PLOTTED => 10:49

REFERENCE: CALTRANS SOIL & ROCK LOGGING, CLASSIFICATION, AND PRESENTATION MANUAL (JUNE 2007)

Dist	COUNTY	ROUTE	POST MILES TOTAL PROJECT	SHEET No.	TOTAL SHEETS
12	Ora	22,405, 605	R0.3/R0.9, 22.3/24.0,3.0/R1.6	1110	1929

REGISTERED CIVIL ENGINEER 08/10/09 DATE

2-1-10
PLANS APPROVAL DATE

REGISTERED PROFESSIONAL ENGINEER ANDREW V. KORKOS No. GE 2357 Exp. 03/31/10 GEOTECHNICAL STATE OF CALIFORNIA

THE STATE OF CALIFORNIA OR ITS OFFICERS OR AGENTS SHALL NOT BE RESPONSIBLE FOR THE ACCURACY OR COMPLETENESS OF ELECTRONIC COPIES OF THIS PLAN SHEET.

EARTH MECHANICS, INC.
17660 NEWHOPE ST. SUITE E
FOUNTAIN VALLEY, CA 92708

OCTA
550 S. MAIN STREET
ORANGE, CA 92863-1584

GROUP SYMBOLS AND NAMES

Graphic/Symbol	Group Names	Graphic/Symbol	Group Names
GW	Well-graded GRAVEL Well-graded GRAVEL with SAND	CL	Lean CLAY Lean CLAY with SAND Lean CLAY with GRAVEL SANDY lean CLAY SANDY lean CLAY with GRAVEL GRAVELLY lean CLAY GRAVELLY lean CLAY with SAND
GP	Poorly graded GRAVEL Poorly graded GRAVEL with SAND		
GW-GM	Well-graded GRAVEL with SILT Well-graded GRAVEL with SILT and SAND	CL-ML	SILTY CLAY SILTY CLAY with SAND SILTY CLAY with GRAVEL SANDY SILTY CLAY SANDY SILTY CLAY with GRAVEL GRAVELLY SILTY CLAY GRAVELLY SILTY CLAY with SAND
GW-GC	Well-graded GRAVEL with CLAY (or SILTY CLAY) Well-graded GRAVEL with CLAY and SAND (or SILTY CLAY and SAND)		
GP-GM	Poorly graded GRAVEL with SILT Poorly graded GRAVEL with SILT and SAND	ML	SILT SILT with SAND SILT with GRAVEL SANDY SILT SANDY SILT with GRAVEL GRAVELLY SILT GRAVELLY SILT with SAND
GP-GC	Poorly graded GRAVEL with CLAY (or SILTY CLAY) Poorly graded GRAVEL with CLAY and SAND (or SILTY CLAY and SAND)		
GM	SILTY GRAVEL SILTY GRAVEL with SAND	OL	ORGANIC lean CLAY ORGANIC lean CLAY with SAND ORGANIC lean CLAY with GRAVEL SANDY ORGANIC lean CLAY SANDY ORGANIC lean CLAY with GRAVEL GRAVELLY ORGANIC lean CLAY GRAVELLY ORGANIC lean CLAY with SAND
GC	CLAYEY GRAVEL CLAYEY GRAVEL with SAND		
GC-GM	SILTY, CLAYEY GRAVEL SILTY, CLAYEY GRAVEL with SAND	OL	ORGANIC SILT ORGANIC SILT with SAND ORGANIC SILT with GRAVEL SANDY ORGANIC SILT SANDY ORGANIC SILT with GRAVEL GRAVELLY ORGANIC SILT GRAVELLY ORGANIC SILT with SAND
SW	Well-graded SAND Well-graded SAND with GRAVEL		
SP	Poorly graded SAND Poorly graded SAND with GRAVEL	CH	Fat CLAY Fat CLAY with SAND Fat CLAY with GRAVEL SANDY fat CLAY SANDY fat CLAY with GRAVEL GRAVELLY fat CLAY GRAVELLY fat CLAY with SAND
SW-SM	Well-graded SAND with SILT Well-graded SAND with SILT and GRAVEL		
SW-SC	Well-graded SAND with CLAY (or SILTY CLAY) Well-graded SAND with CLAY and GRAVEL (or SILTY CLAY and GRAVEL)	MH	Elastic SILT Elastic SILT with SAND Elastic SILT with GRAVEL SANDY elastic SILT SANDY elastic SILT with GRAVEL GRAVELLY elastic SILT GRAVELLY elastic SILT with SAND
SP-SM	Poorly graded SAND with SILT Poorly graded SAND with SILT and GRAVEL		
SP-SC	Poorly graded SAND with CLAY (or SILTY CLAY) Poorly graded SAND with CLAY and GRAVEL (or SILTY CLAY and GRAVEL)	OH	ORGANIC fat CLAY ORGANIC fat CLAY with SAND ORGANIC fat CLAY with GRAVEL SANDY ORGANIC fat CLAY SANDY ORGANIC fat CLAY with GRAVEL GRAVELLY ORGANIC fat CLAY GRAVELLY ORGANIC fat CLAY with SAND
SM	SILTY SAND SILTY SAND with GRAVEL		
SC	CLAYEY SAND CLAYEY SAND with GRAVEL	OH	ORGANIC elastic SILT ORGANIC elastic SILT with SAND ORGANIC elastic SILT with GRAVEL SANDY ORGANIC elastic SILT SANDY ORGANIC elastic SILT with GRAVEL GRAVELLY ORGANIC elastic SILT GRAVELLY ORGANIC elastic SILT with SAND
SC-SM	SILTY, CLAYEY SAND SILTY, CLAYEY SAND with GRAVEL		
PT	PEAT	OL/OH	ORGANIC SOIL ORGANIC SOIL with SAND ORGANIC SOIL with GRAVEL SANDY ORGANIC SOIL SANDY ORGANIC SOIL with GRAVEL GRAVELLY ORGANIC SOIL GRAVELLY ORGANIC SOIL with SAND
	COBBLES COBBLES and BOULDERS BOULDERS		

FIELD AND LABORATORY TESTING

- (C) Consolidation (ASTM D 2435)
- (CL) Collapse Potential (ASTM D 5333)
- (CP) Compaction Curve (CTM 216)
- (CR) Corrosivity Testing (CTM 643, CTM 422, CTM 417)
- (CU) Consolidated Undrained Triaxial (ASTM D 4767)
- (DS) Direct Shear (ASTM D 3080)
- (EI) Expansion Index (ASTM D 4829)
- (M) Moisture Content (ASTM D 2216)
- (OC) Organic Content-% (ASTM D 2974)
- (P) Permeability (CTM 220)
- (PA) Particle Size Analysis (ASTM D 422)
- (PI) Plasticity Index (AASHTO T 90) Liquid Limit (AASHTO T 89)
- (PL) Point Load Index (ASTM D 5731)
- (PM) Pressure Meter
- (PP) Pocket Penetrometer
- (R) R-Value (CTM 301)
- (SE) Sand Equivalent (CTM 217)
- (SG) Specific Gravity (AASHTO T 100)
- (SL) Shrinkage Limit (ASTM D 427)
- (SW) Swell Potential (ASTM D 4546)
- (TV) Pocket Torvane
- (UC) Unconfined Compression-Soil (ASTM D 2166) Unconfined Compression-Rock (ASTM D 2938)
- (UU) Unconsolidated Undrained Triaxial (ASTM D 2850)
- (UW) Unit Weight (ASTM D 4767)
- (VS) Vane Shear (AASHTO T 223)

APPARENT DENSITY OF COHESIONLESS SOILS

Description	SPT N_{60} (Blows / 12 inches)
Very loose	0 - 4
Loose	5 - 10
Medium Dense	11 - 30
Dense	31 - 50
Very Dense	> 50

MOISTURE

Description	Criteria
Dry	Absence of moisture, dusty, dry to the touch
Moist	Damp but no visible water
Wet	Visible free water, usually soil is below water table

PERCENT OR PROPORTION OF SOILS

Description	Criteria
Trace	Particles are present but estimated to be less than 5%
Few	5 to 10%
Little	15 to 25%
Some	30 to 45%
Mostly	50 to 100%

PARTICLE SIZE

Description		Size
Boulder		> 12"
Cobble		3" to 12"
Gravel	Coarse	3/4" to 3"
	Fine	No. 4 to 3/4"
Sand	Coarse	No. 10 to No. 4
	Medium	No. 40 to No. 10
	Fine	No. 200 to No. 40

LOG OF TEST BORINGS NO. 2
RW No. 414
SCALE AS SHOWN

R-6

STATE OF CALIFORNIA - DEPARTMENT OF TRANSPORTATION
Caltrans

CONSULTANT FUNCTIONAL SUPERVISOR: K.ARULMOLI
CALCULATED-DESIGNED BY: J.FANG
CHECKED BY: G.J.GUNARANJAN
REVISED BY: K.P
DATE REVISED: 08/10/09

LAST REVISION 08-10-09
DATE PLOTTED => 04-FEB-2010
TIME PLOTTED => 10:49

Dist	COUNTY	ROUTE	POST MILES TOTAL PROJECT	SHEET No.	TOTAL SHEETS
12	Ora	22,405, 605	R0.3/R0.9, 22.3/24.0,3.0/R1.6	1111	1929

REGISTERED CIVIL ENGINEER 08/10/09 DATE

2-1-10
PLANS APPROVAL DATE

REGISTERED PROFESSIONAL ENGINEER ANDREW V. KORKOS No. GE 2357 Exp. 03/31/10 GEOTECHNICAL STATE OF CALIFORNIA

THE STATE OF CALIFORNIA OR ITS OFFICERS OR AGENTS SHALL NOT BE RESPONSIBLE FOR THE ACCURACY OR COMPLETENESS OF ELECTRONIC COPIES OF THIS PLAN SHEET.

EARTH MECHANICS, INC.
17660 NEWHOPE ST. SUITE E
FOUNTAIN VALLEY, CA 92708

OCTA
550 S. MAIN STREET
ORANGE, CA 92863-1584

BENCHMARKS:

Monument: 1A-144-04

Described by OCS 2005 - Found 3.75" OCS aluminum benchmark disk stamped "1A-144-04", set in the southwesterly corner of a 4.4 ft by 4.4 ft concrete catch basin. Monument is located in the northeasterly corner of the intersection of Seal Beach Boulevard and St. Cloud Drive, 44 ft easterly of the centerline of Seal Beach Boulevard and 58 ft northerly of the centerline of St. Cloud Dr. Monument is set level with the sidewalk.

Elevation: 15.37 feet

NOTES:

(1) This LOTB sheet (Boring Record) was prepared in accordance with the Caltrans Soil and Rock Classification Logging, Classification and Presentation Manual (June 2007).

(2) 2.4" samples were taken using a California Modified Sampler.

(3) A rope and cat-head hammer system consisting of a hammer weight of 140 lbs falling a distance of 30" was used to advance the drive sampler.

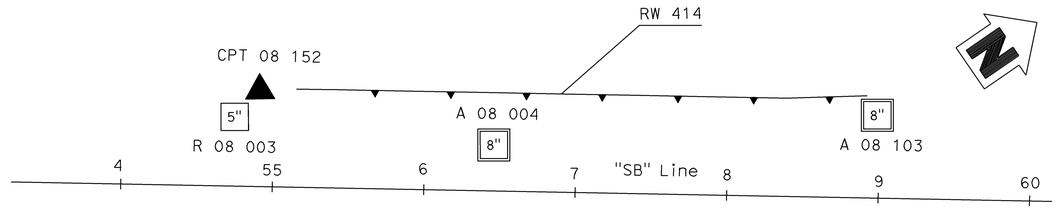

PLAN

1" = 50'

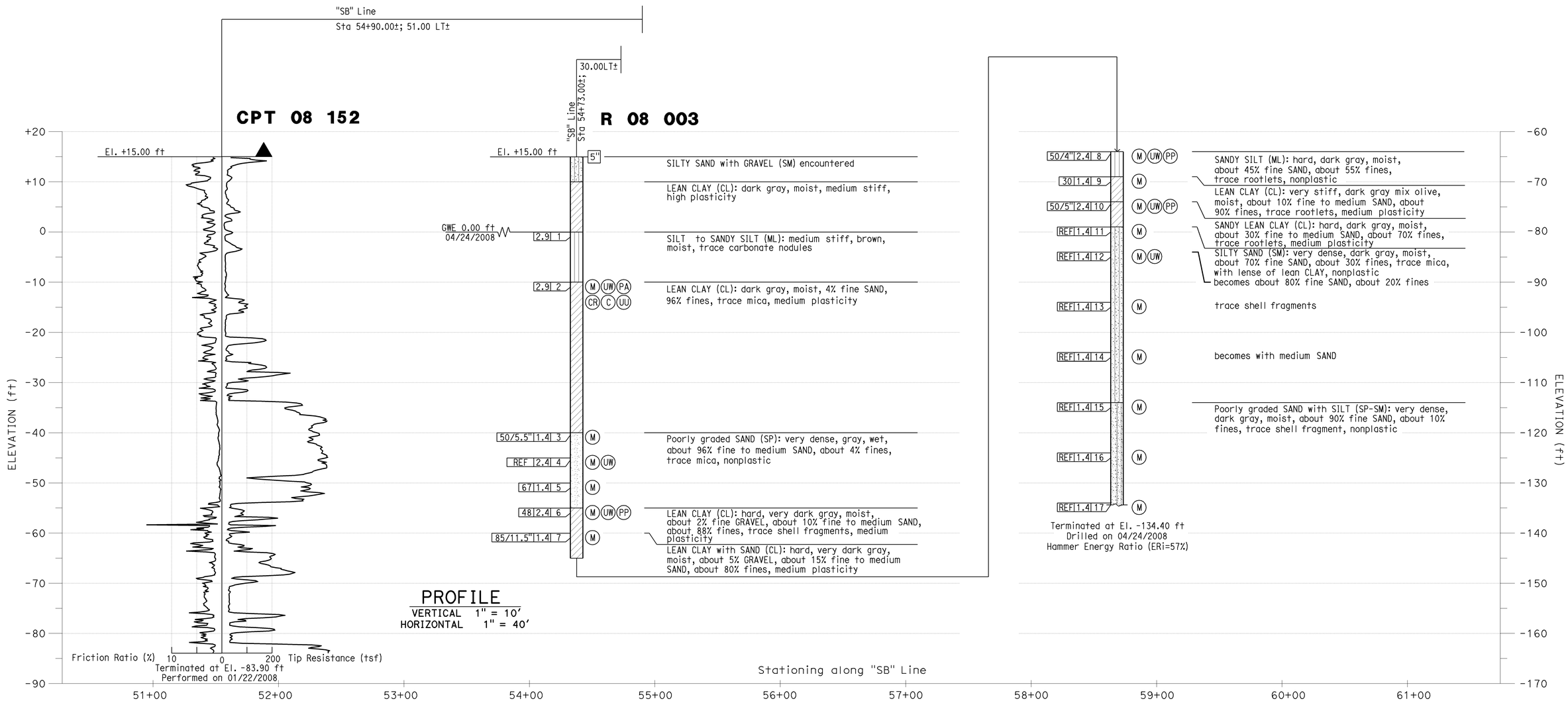

PROFILE

VERTICAL 1" = 10'
HORIZONTAL 1" = 40'

LOG OF TEST BORINGS NO. 3
RW No. 414

SCALE AS SHOWN

R-7

STATE OF CALIFORNIA - DEPARTMENT OF TRANSPORTATION
Caltrans

CONSULTANT FUNCTIONAL SUPERVISOR: K.ARULMOLI
CALCULATED-DESIGNED BY: J.FANG
CHECKED BY: G.J.GUNARANJAN
REVISED BY: K.P
DATE REVISED: 08/10/09

LAST REVISION 08-10-09
DATE PLOTTED => 04-FEB-2010
TIME PLOTTED => 10:49

Dist	COUNTY	ROUTE	POST MILES TOTAL PROJECT	SHEET No.	TOTAL SHEETS
12	Ora	22,405, 605	R0.3/R0.9, 22.3/24.0,3.0/R1.6	1112	1929

REGISTERED CIVIL ENGINEER 08/10/09 DATE

2-1-10
PLANS APPROVAL DATE

REGISTERED PROFESSIONAL ENGINEER ANDREW V. KORKOS No. GE 2357 Exp. 03/31/10 GEOTECHNICAL STATE OF CALIFORNIA

THE STATE OF CALIFORNIA OR ITS OFFICERS OR AGENTS SHALL NOT BE RESPONSIBLE FOR THE ACCURACY OR COMPLETENESS OF ELECTRONIC COPIES OF THIS PLAN SHEET.

EARTH MECHANICS, INC.
17660 NEWHOPE ST. SUITE E
FOUNTAIN VALLEY, CA 92708

OCTA
550 S. MAIN STREET
ORANGE, CA 92863-1584

BENCHMARKS:

Monument: 1A-144-04

Described by OCS 2005 - Found 3.75" OCS aluminum benchmark disk stamped "1A-144-04", set in the southwesterly corner of a 4.4 ft by 4.4 ft concrete catch basin. Monument is located in the northeasterly corner of the intersection of Seal Beach Boulevard and St. Cloud Drive, 44 ft easterly of the centerline of Seal Beach Boulevard and 58 ft northerly of the centerline of St. Cloud Dr. Monument is set level with the sidewalk.

Elevation: 15.37 feet

NOTES:

(1) This LOTB sheet (Boring Record) was prepared in accordance with the Caltrans Soil and Rock Classification Logging, Classification and Presentation Manual (June 2007).

(2) 2.4" samples were taken using a California Modified Sampler.

(3) An automatic trip hammer system consisting of a hammer weight of 140 lbs falling a distance of 30" was used to advance the drive sampler.

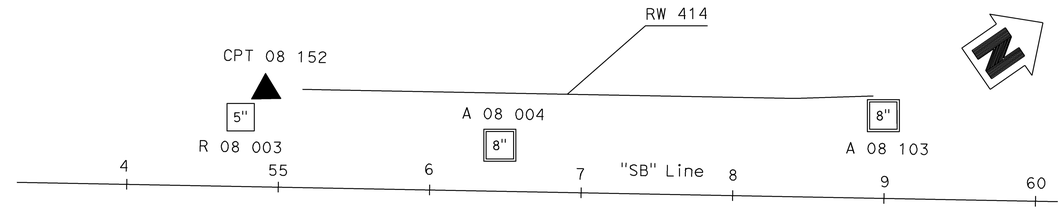

PLAN

SCALE: 1" = 50'

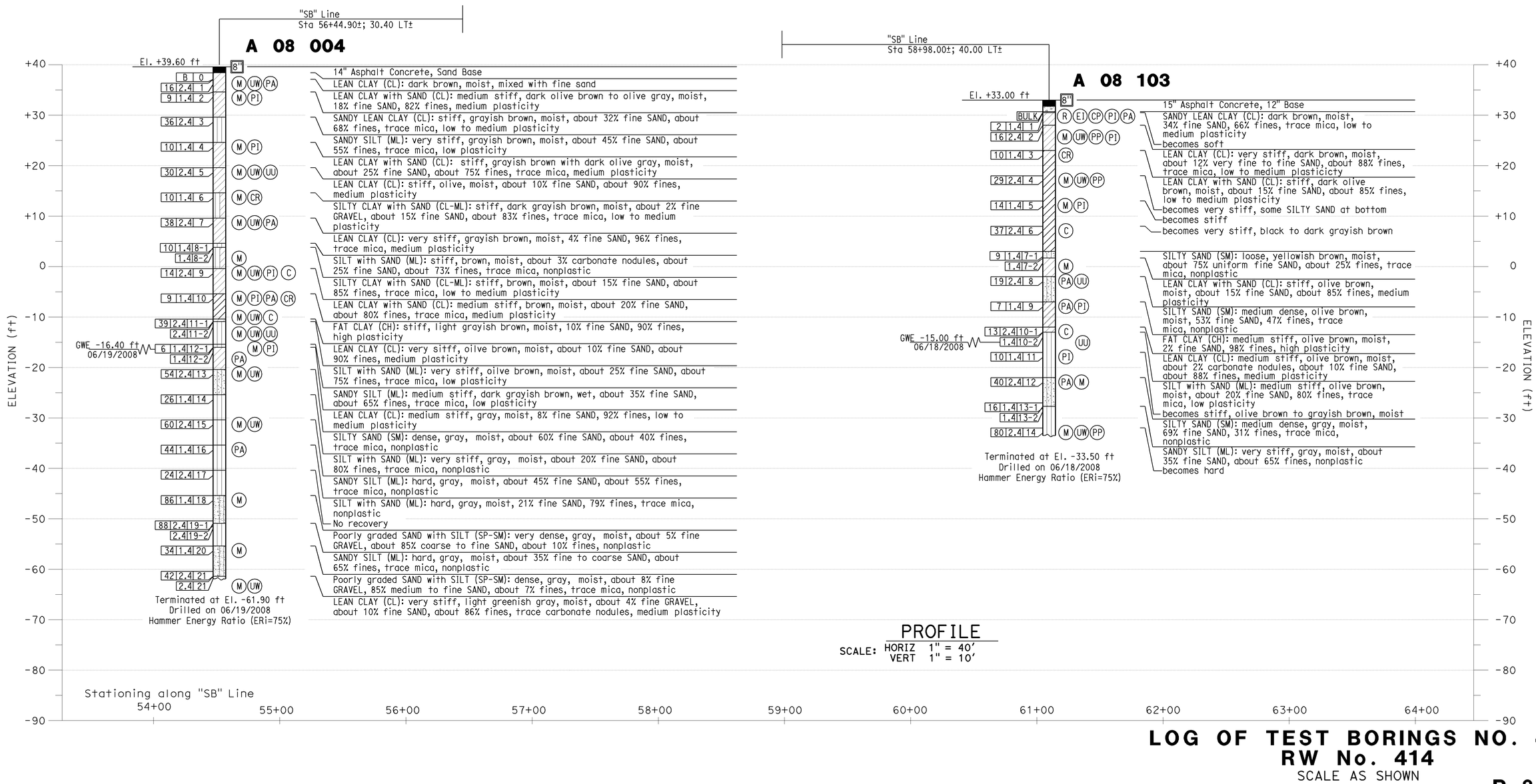

PROFILE

SCALE: HORIZ 1" = 40'
VERT 1" = 10'

LOG OF TEST BORINGS NO. 4
RW No. 414

SCALE AS SHOWN

R-8

STATE OF CALIFORNIA - DEPARTMENT OF TRANSPORTATION
Caltrans

CONSULTANT FUNCTIONAL SUPERVISOR: K.ARULMOLI
CALCULATED-DESIGNED BY: G.J.GUNARANJAN
CHECKED BY: J.FANG
REVISED BY: K.P
DATE REVISED: 08/10/09

LAST REVISION 08-10-09
DATE PLOTTED => 04-FEB-2010
TIME PLOTTED => 10:50

Dist	COUNTY	ROUTE	POST MILES TOTAL PROJECT	SHEET No.	TOTAL SHEETS
12	Ora	22,405, 605	R0.3/R0.9, 22.3/24.0,3.0/R1.6	1113	1929

REGISTERED CIVIL ENGINEER 12/22/09 DATE

2-1-10
PLANS APPROVAL DATE

REGISTERED PROFESSIONAL ENGINEER ROSS E. LEW No. C53399 Exp. 6/30/11 CIVIL STATE OF CALIFORNIA

THE STATE OF CALIFORNIA OR ITS OFFICERS OR AGENTS SHALL NOT BE RESPONSIBLE FOR THE ACCURACY OR COMPLETENESS OF ELECTRONIC COPIES OF THIS PLAN SHEET.

TRC
21 TECHNOLOGY Dr
IRVINE, CA 92618

ORANGE COUNTY
TRANSPORTATION AUTHORITY
550 S. MAIN STREET
ORANGE, CA 92863-1584

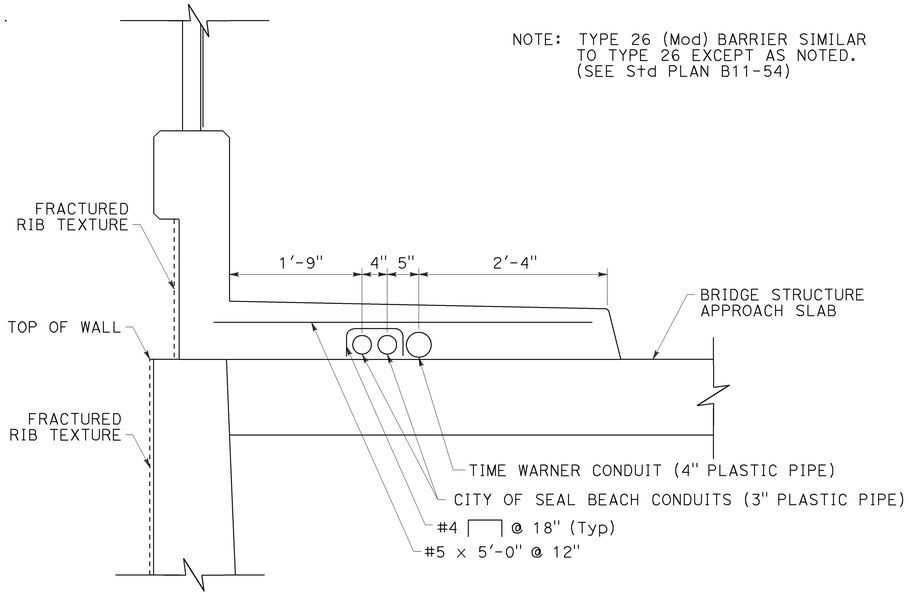

CONCRETE BARRIER TYPE 26 (Mod)

NO SCALE

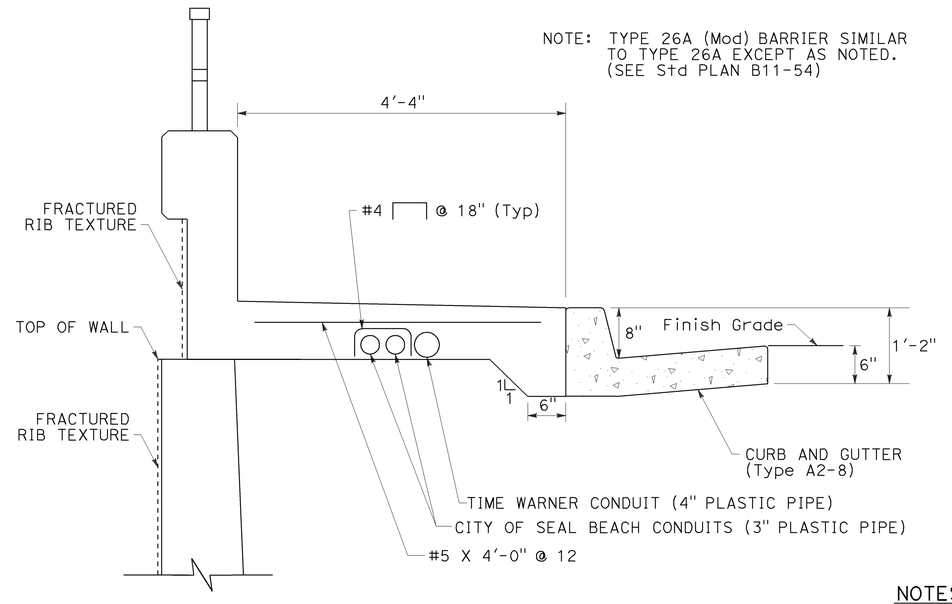

CONCRETE BARRIER TYPE 26A (Mod)

NO SCALE

NOTES:

1. REINFORCEMENT CALLED OUT IS IN ADDITION TO THAT SHOWN ON STANDARD PLAN B11-54.
2. FOR REINFORCEMENT AND DETAILS NOT SHOWN, SEE STANDARD PLAN B11-54.
3. NO ADDITIONAL FUTURE UTILITIES ARE REQUIRED IN BARRIER.

RETAINING WALL QUANTITIES

SHEET No.	STATION	RW No.	STRUCTURE EXCAVATION (RETAINING WALL)	STRUCTURE BACKFILL (RETAINING WALL)	PERVIOUS BACKFILL MATERIAL	STRUCTURAL CONCRETE, RETAINING WALL	FRACTURED RIB TEXTURE	BAR REINFORCING STEEL (RETAINING WALL)	CHAIN LINK RAILING (TYPE 7)	TUBULAR HANDRAILING	CONCRETE BARRIER (TYPE 26 MOD)	CONCRETE BARRIER (TYPE 26A MOD)
			CY	CY	CY	CY	SQFT	LB	LF	LF	LF	LF
RW-2 TO RW-4	"SB" 55+39.79 TO "SB" 58+91.73	414	646	931	52	253	3,087	16,735	122	330	122	330
TOTAL			646	931	52	253	3,087	16,735	122	330	122	330

NOTE: FOR ADDITIONAL QUANTITIES, SEE STRUCTURE PLANS.

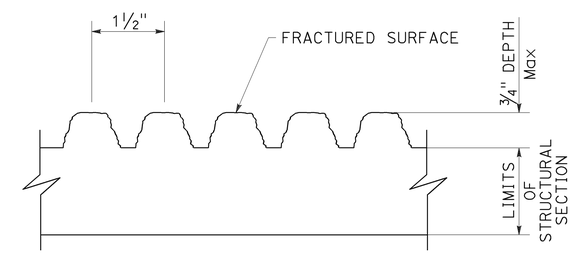

FRACTURED RIB TEXTURE

NO SCALE

RETAINING WALL DETAILS AND QUANTITIES RW No. 414

NO SCALE

R-9

THIS PLAN ACCURATE FOR RETAINING WALL WORK ONLY.

STATE OF CALIFORNIA - DEPARTMENT OF TRANSPORTATION
Caltrans

CONSULTANT FUNCTIONAL SUPERVISOR: ROSS LEW
CALCULATED-DESIGNED BY: NICK POLICHETTI / HAI TRAN
CHECKED BY: KEVIN MICHALSKI
REVISED BY: DBL
DATE REVISED: 12/22/09

LAST REVISION 12-22-09 DATE PLOTTED => 04-FEB-2010 TIME PLOTTED => 14:34

Dist	COUNTY	ROUTE	POST MILES TOTAL PROJECT	SHEET No.	TOTAL SHEETS
12	Ora	22,405, 605	R0.3/R0.9, 22.3/24.0,3.0/R1.6	1114	1929

REGISTERED CIVIL ENGINEER — DATE 8/10/09

2-1-10
PLANS APPROVAL DATE

REGISTERED PROFESSIONAL ENGINEER — ROSS E. LEW — No. C53399 — Exp. 6/30/11 — CIVIL — STATE OF CALIFORNIA

THE STATE OF CALIFORNIA OR ITS OFFICERS OR AGENTS SHALL NOT BE RESPONSIBLE FOR THE ACCURACY OR COMPLETENESS OF ELECTRONIC COPIES OF THIS PLAN SHEET.

TRC
21 TECHNOLOGY Dr
IRVINE, CA 92618

ORANGE COUNTY
TRANSPORTATION AUTHORITY
550 S. MAIN STREET
ORANGE, CA 92863-1584

NOTES:

1. FOR COMPLETE RIGHT OF WAY AND ACCURATE ACCESS DATA, SEE RIGHT OF WAY RECORD MAPS AT DISTRICT OFFICE.
2. FOR AESTHETIC DETAILS, SEE SHEET SW-29.

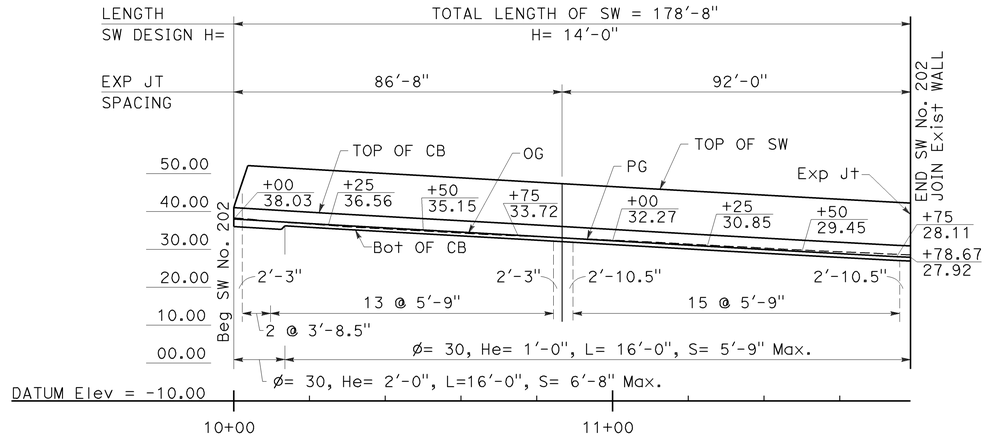

ELEVATION

SCALE: Horiz 1" = 20'
Vert 1" = 20'

CURVE DATA				
No.	R	Δ	T	L
27	826.00'	128°19'16"	1705.67'	1,849.93'

LEGEND

B15-X — STANDARD PLAN SHEET No.
X-X — DETAIL No.

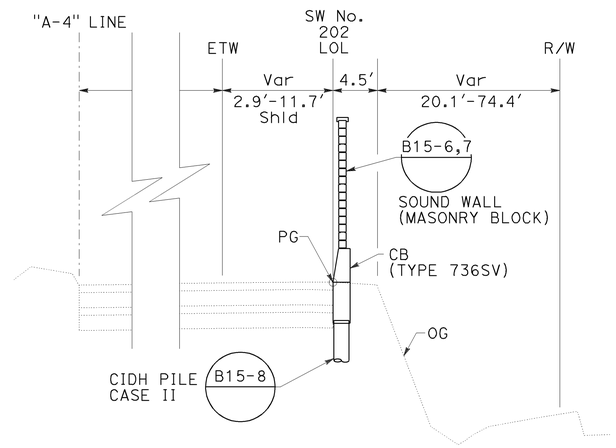

SOUND WALL 202

Sta 10+00 TO Sta 11+78.67
NO SCALE

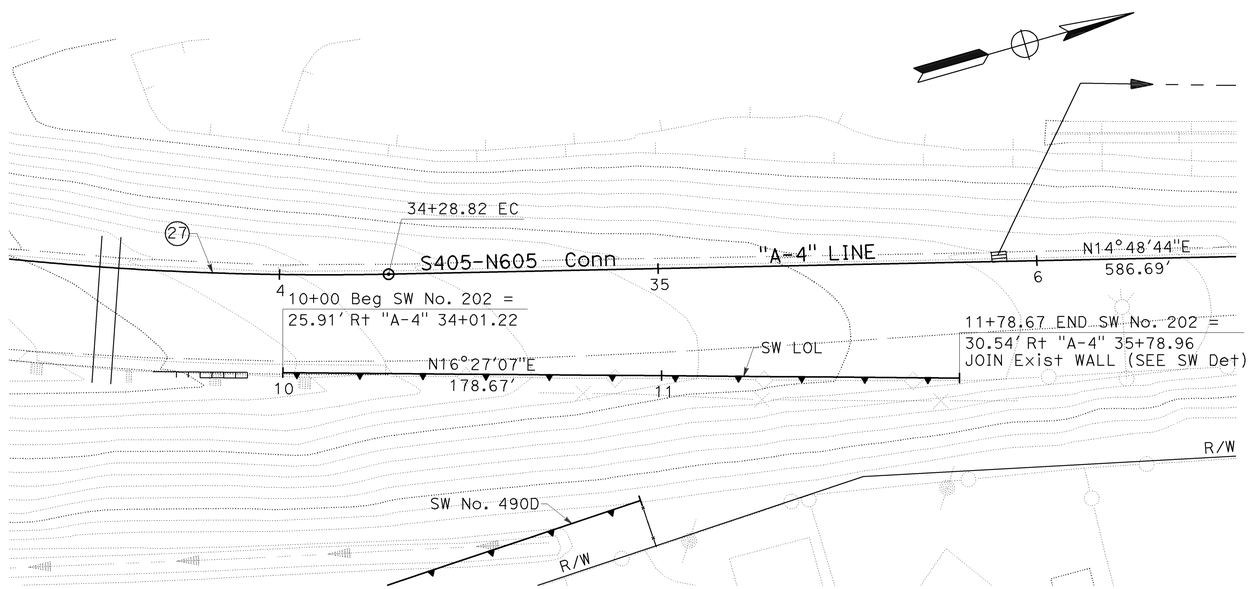

PLAN

SCALE: 1" = 20'

SOUND WALL PLAN
SW No. 202

SCALE AS SHOWN

SW-1

THIS PLAN ACCURATE FOR SOUND WALL WORK ONLY.

STATE OF CALIFORNIA - DEPARTMENT OF TRANSPORTATION — Caltrans

CONSULTANT FUNCTIONAL SUPERVISOR: ROSS LEW
CALCULATED-DESIGNED BY: JASON YAW
CHECKED BY: ROSS LEW
REVISED BY: DBL
DATE REVISED: 8/10/09

LAST REVISION 08-10-09 | DATE PLOTTED => 04-FEB-2010 | TIME PLOTTED => 10:50

Dist	COUNTY	ROUTE	POST MILES TOTAL PROJECT	SHEET No.	TOTAL SHEETS
12	Ora	22,405, 605	R0.3/R0.9, 22.3/24.0,3.0/R1.6	1115	1929

REGISTERED CIVIL ENGINEER 08/10/09 DATE

2-1-10
PLANS APPROVAL DATE

REGISTERED PROFESSIONAL ENGINEER ANDREW V. KORKOS No. GE 2357 Exp. 03/31/10 GEOTECHNICAL STATE OF CALIFORNIA

THE STATE OF CALIFORNIA OR ITS OFFICERS OR AGENTS SHALL NOT BE RESPONSIBLE FOR THE ACCURACY OR COMPLETENESS OF ELECTRONIC COPIES OF THIS PLAN SHEET.

EARTH MECHANICS, INC.
17660 NEWHOPE ST. SUITE E
FOUNTAIN VALLEY, CA 92708

OCTA
550 S. MAIN STREET
ORANGE, CA 92863-1584

REFERENCE: CALTRANS SOIL & ROCK LOGGING, CLASSIFICATION, AND PRESENTATION MANUAL (JUNE 2007)

CEMENTATION

Description	Criteria
Weak	Crumbles or breaks with handling or little finger pressure.
Moderate	Crumbles or breaks with considerable finger pressure.
Strong	Will not crumble or break with finger pressure.

CONSISTENCY OF COHESIVE SOILS

Description	Unconfined Compressive Strength (tsf)	Pocket Penetrometer Measurement (tsf)	Torvane Measurement (tsf)	Field Approximation
Very Soft	< 0.25	< 0.25	< 0.12	Easily penetrated several inches by fist
Soft	0.25 to 0.50	0.25 to 0.50	0.12 to 0.25	Easily penetrated several inches by thumb
Medium Stiff	0.50 to 1.0	0.50 to 1.0	0.25 to 0.50	Penetrated several inches by thumb with moderate effort
Stiff	1 to 2	1 to 2	0.50 to 1.0	Readily indented by thumb but penetrated only with great effort
Very Stiff	2 to 4	2 to 4	1.0 to 2.0	Readily indented by thumbnail
Hard	> 4.0	> 4.0	> 2.0	Indented by thumbnail with difficulty

BOREHOLE IDENTIFICATION

Symbol	Hole Type	Description
Size	A	Auger Boring
Size	R P	Rotary drilled boring Rotary percussion boring (air)
Size	R	Rotary drilled diamond core
Size	HD HA	Hand driven (1-inch soil tube) Hand Auger
●	D	Dynamic Cone Penetration Boring
▲	CPT	Cone Penetration Test (ASTM D 5778-95)
□	O	Other

Note: Size in inches.

PLASTICITY OF FINE-GRAINED SOILS

Description	Criteria
Nonplastic	A 1/8-inch thread cannot be rolled at any water content.
Low	The thread can barely be rolled and the lump cannot be formed when drier than the plastic limit.
Medium	The thread is easy to roll and not much time is required to reach the plastic limit. The thread cannot be rerolled after reaching the plastic limit. The lump crumbles when drier than the plastic limit.
High	It takes considerable time rolling and kneading to reach the plastic limit. The thread can be rerolled several times after reaching the plastic limit. The lump can be formed without crumbling when drier than the plastic limit.

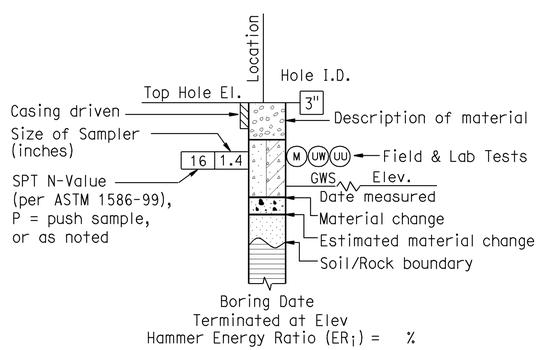

ROTARY BORING

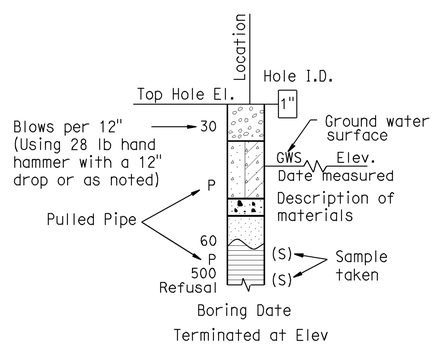

HAND BORING

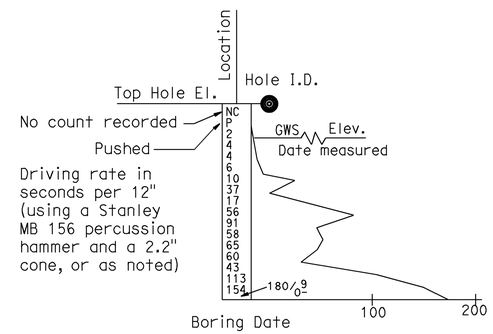

DYNAMIC CONE PENETRATION BORING

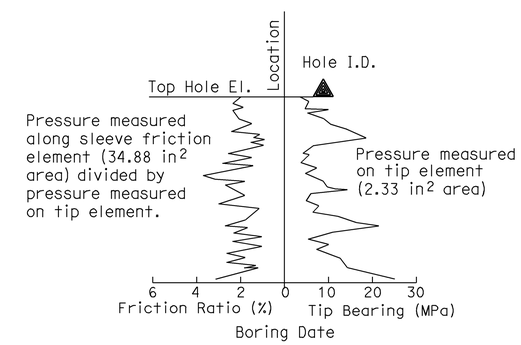

CONE PENETRATION TEST (CPT) SOUNDING

LOG OF TEST BORINGS NO. 1
LEGEND

SCALE AS SHOWN

SW-2

REVISED BY	DATE REVISED	CALCULATED-DESIGNED BY	CHECKED BY	SUPERVISOR	CONSULTANT FUNCTIONAL SUPERVISOR
K.P	08/10/09	J.FANG	G.J.GUNARANJAN	K.ARULMOLI	

STATE OF CALIFORNIA - DEPARTMENT OF TRANSPORTATION

LAST REVISION 08-10-09 DATE PLOTTED => 04-FEB-2010 TIME PLOTTED => 10:50

REFERENCE: CALTRANS SOIL & ROCK LOGGING, CLASSIFICATION, AND PRESENTATION MANUAL (JUNE 2007)

Dist	COUNTY	ROUTE	POST MILES TOTAL PROJECT	SHEET No.	TOTAL SHEETS
12	Ora	22,405, 605	R0.3/R0.9, 22.3/24.0,3.0/R1.6	1116	1929

REGISTERED CIVIL ENGINEER 08/10/09 DATE

2-1-10
PLANS APPROVAL DATE

REGISTERED PROFESSIONAL ENGINEER ANDREW V. KORKOS No. GE 2357 Exp. 03/31/10 GEOTECHNICAL STATE OF CALIFORNIA

THE STATE OF CALIFORNIA OR ITS OFFICERS OR AGENTS SHALL NOT BE RESPONSIBLE FOR THE ACCURACY OR COMPLETENESS OF ELECTRONIC COPIES OF THIS PLAN SHEET.

EARTH MECHANICS, INC.
17660 NEWHOPE ST. SUITE E
FOUNTAIN VALLEY, CA 92708

OCTA
550 S. MAIN STREET
ORANGE, CA 92863-1584

GROUP SYMBOLS AND NAMES

Graphic/Symbol	Group Names	Graphic/Symbol	Group Names
GW	Well-graded GRAVEL Well-graded GRAVEL with SAND	CL	Lean CLAY Lean CLAY with SAND Lean CLAY with GRAVEL SANDY lean CLAY SANDY lean CLAY with GRAVEL GRAVELLY lean CLAY GRAVELLY lean CLAY with SAND
GP	Poorly graded GRAVEL Poorly graded GRAVEL with SAND		
GW-GM	Well-graded GRAVEL with SILT Well-graded GRAVEL with SILT and SAND	CL-ML	SILTY CLAY SILTY CLAY with SAND SILTY CLAY with GRAVEL SANDY SILTY CLAY SANDY SILTY CLAY with GRAVEL GRAVELLY SILTY CLAY GRAVELLY SILTY CLAY with SAND
GW-GC	Well-graded GRAVEL with CLAY (or SILTY CLAY) Well-graded GRAVEL with CLAY and SAND (or SILTY CLAY and SAND)		
GP-GM	Poorly graded GRAVEL with SILT Poorly graded GRAVEL with SILT and SAND	ML	SILT SILT with SAND SILT with GRAVEL SANDY SILT SANDY SILT with GRAVEL GRAVELLY SILT GRAVELLY SILT with SAND
GP-GC	Poorly graded GRAVEL with CLAY (or SILTY CLAY) Poorly graded GRAVEL with CLAY and SAND (or SILTY CLAY and SAND)		
GM	SILTY GRAVEL SILTY GRAVEL with SAND	OL	ORGANIC lean CLAY ORGANIC lean CLAY with SAND ORGANIC lean CLAY with GRAVEL SANDY ORGANIC lean CLAY SANDY ORGANIC lean CLAY with GRAVEL GRAVELLY ORGANIC lean CLAY GRAVELLY ORGANIC lean CLAY with SAND
GC	CLAYEY GRAVEL CLAYEY GRAVEL with SAND		
GC-GM	SILTY, CLAYEY GRAVEL SILTY, CLAYEY GRAVEL with SAND	OL	ORGANIC SILT ORGANIC SILT with SAND ORGANIC SILT with GRAVEL SANDY ORGANIC SILT SANDY ORGANIC SILT with GRAVEL GRAVELLY ORGANIC SILT GRAVELLY ORGANIC SILT with SAND
SW	Well-graded SAND Well-graded SAND with GRAVEL		
SP	Poorly graded SAND Poorly graded SAND with GRAVEL	CH	Fat CLAY Fat CLAY with SAND Fat CLAY with GRAVEL SANDY fat CLAY SANDY fat CLAY with GRAVEL GRAVELLY fat CLAY GRAVELLY fat CLAY with SAND
SW-SM	Well-graded SAND with SILT Well-graded SAND with SILT and GRAVEL		
SW-SC	Well-graded SAND with CLAY (or SILTY CLAY) Well-graded SAND with CLAY and GRAVEL (or SILTY CLAY and GRAVEL)	MH	Elastic SILT Elastic SILT with SAND Elastic SILT with GRAVEL SANDY elastic SILT SANDY elastic SILT with GRAVEL GRAVELLY elastic SILT GRAVELLY elastic SILT with SAND
SP-SM	Poorly graded SAND with SILT Poorly graded SAND with SILT and GRAVEL		
SP-SC	Poorly graded SAND with CLAY (or SILTY CLAY) Poorly graded SAND with CLAY and GRAVEL (or SILTY CLAY and GRAVEL)	OH	ORGANIC fat CLAY ORGANIC fat CLAY with SAND ORGANIC fat CLAY with GRAVEL SANDY ORGANIC fat CLAY SANDY ORGANIC fat CLAY with GRAVEL GRAVELLY ORGANIC fat CLAY GRAVELLY ORGANIC fat CLAY with SAND
SM	SILTY SAND SILTY SAND with GRAVEL		
SC	CLAYEY SAND CLAYEY SAND with GRAVEL	OH	ORGANIC elastic SILT ORGANIC elastic SILT with SAND ORGANIC elastic SILT with GRAVEL SANDY ORGANIC elastic SILT SANDY ORGANIC elastic SILT with GRAVEL GRAVELLY ORGANIC elastic SILT GRAVELLY ORGANIC elastic SILT with SAND
SC-SM	SILTY, CLAYEY SAND SILTY, CLAYEY SAND with GRAVEL		
PT	PEAT	OL/OH	ORGANIC SOIL ORGANIC SOIL with SAND ORGANIC SOIL with GRAVEL SANDY ORGANIC SOIL SANDY ORGANIC SOIL with GRAVEL GRAVELLY ORGANIC SOIL GRAVELLY ORGANIC SOIL with SAND
	COBBLES COBBLES and BOULDERS BOULDERS		

FIELD AND LABORATORY TESTING

- (C) Consolidation (ASTM D 2435)
- (CL) Collapse Potential (ASTM D 5333)
- (CP) Compaction Curve (CTM 216)
- (CR) Corrosivity Testing (CTM 643, CTM 422, CTM 417)
- (CU) Consolidated Undrained Triaxial (ASTM D 4767)
- (DS) Direct Shear (ASTM D 3080)
- (EI) Expansion Index (ASTM D 4829)
- (M) Moisture Content (ASTM D 2216)
- (OC) Organic Content-% (ASTM D 2974)
- (P) Permeability (CTM 220)
- (PA) Particle Size Analysis (ASTM D 422)
- (PI) Plasticity Index (AASHTO T 90) Liquid Limit (AASHTO T 89)
- (PL) Point Load Index (ASTM D 5731)
- (PM) Pressure Meter
- (PP) Pocket Penetrometer
- (R) R-Value (CTM 301)
- (SE) Sand Equivalent (CTM 217)
- (SG) Specific Gravity (AASHTO T 100)
- (SL) Shrinkage Limit (ASTM D 427)
- (SW) Swell Potential (ASTM D 4546)
- (TV) Pocket Torvane
- (UC) Unconfined Compression-Soil (ASTM D 2166) Unconfined Compression-Rock (ASTM D 2938)
- (UU) Unconsolidated Undrained Triaxial (ASTM D 2850)
- (UW) Unit Weight (ASTM D 4767)
- (VS) Vane Shear (AASHTO T 223)

APPARENT DENSITY OF COHESIONLESS SOILS

Description	SPT N_{60} (Blows / 12 inches)
Very loose	0 - 4
Loose	5 - 10
Medium Dense	11 - 30
Dense	31 - 50
Very Dense	> 50

MOISTURE

Description	Criteria
Dry	Absence of moisture, dusty, dry to the touch
Moist	Damp but no visible water
Wet	Visible free water, usually soil is below water table

PERCENT OR PROPORTION OF SOILS

Description	Criteria
Trace	Particles are present but estimated to be less than 5%
Few	5 to 10%
Little	15 to 25%
Some	30 to 45%
Mostly	50 to 100%

PARTICLE SIZE

Description		Size
Boulder		> 12"
Cobble		3" to 12"
Gravel	Coarse	3/4" to 3"
	Fine	No. 4 to 3/4"
Sand	Coarse	No. 10 to No. 4
	Medium	No. 40 to No. 10
	Fine	No. 200 to No. 40

LOG OF TEST BORINGS NO. 2
LEGEND

SCALE AS SHOWN

SW-3

REVISED BY	DATE REVISED
K.P	08/10/09

CALCULATED-DESIGNED BY: J.FANG
CHECKED BY: G.J.GUNARANJAN
CONSULTANT FUNCTIONAL SUPERVISOR: K.ARULMOLI

STATE OF CALIFORNIA - DEPARTMENT OF TRANSPORTATION
Caltrans

LAST REVISION 08-10-09
DATE PLOTTED => 04-FEB-2010
TIME PLOTTED => 10:50

Dist	COUNTY	ROUTE	POST MILES TOTAL PROJECT	SHEET No.	TOTAL SHEETS
12	Ora	22,405, 605	R0.3/R0.9, 22.3/24.0,3.0/R1.6	1117	1929

REGISTERED CIVIL ENGINEER 08/10/09 DATE

2-1-10
PLANS APPROVAL DATE

REGISTERED PROFESSIONAL ENGINEER ANDREW V. KORKOS No. GE 2357 Exp. 03/31/10 GEOTECHNICAL STATE OF CALIFORNIA

THE STATE OF CALIFORNIA OR ITS OFFICERS OR AGENTS SHALL NOT BE RESPONSIBLE FOR THE ACCURACY OR COMPLETENESS OF ELECTRONIC COPIES OF THIS PLAN SHEET.

EARTH MECHANICS, INC.
17660 NEWHOPE ST. SUITE E
FOUNTAIN VALLEY, CA 92708

OCTA
550 S. MAIN STREET
ORANGE, CA 92863-1584

BENCHMARKS:

Monument: 1A-144-04
Described by OCS 2005 - Found 3.75" OCS aluminum benchmark disk stamped "1A-144-04", set in the southwesterly corner of a 4.4 ft by 4.4 ft concrete catch basin. Monument is located in the northeasterly corner of the intersection of Seal Beach Boulevard and St. Cloud Drive, 44 ft easterly of the centerline of Seal Beach Boulevard and 58 ft northerly of the centerline of St. Cloud Dr. Monument is set level with the sidewalk.
Elevation: 15.37 feet

NOTES:

(1) This LOTB sheet (Boring Record) was prepared in accordance with the Caltrans Soil and Rock Classification Logging, Classification and Presentation Manual (June 2007).

(2) 2.4" samples were taken using a California Modified Sampler.

(3) An automatic trip hammer system consisting of a hammer weight of 140 lbs falling a distance of 30" was used to advance the drive sampler.

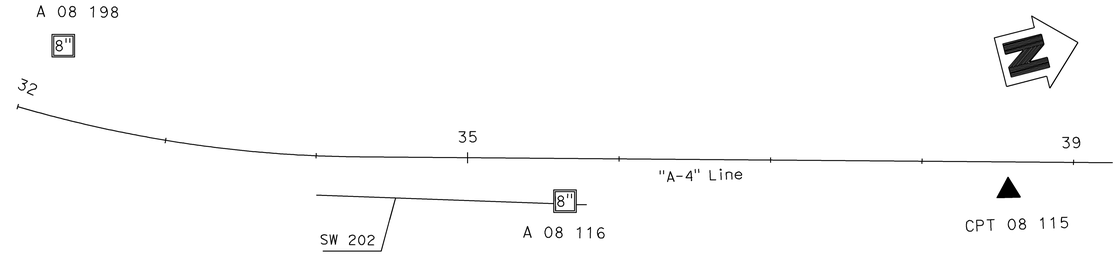

PLAN

1" = 50'

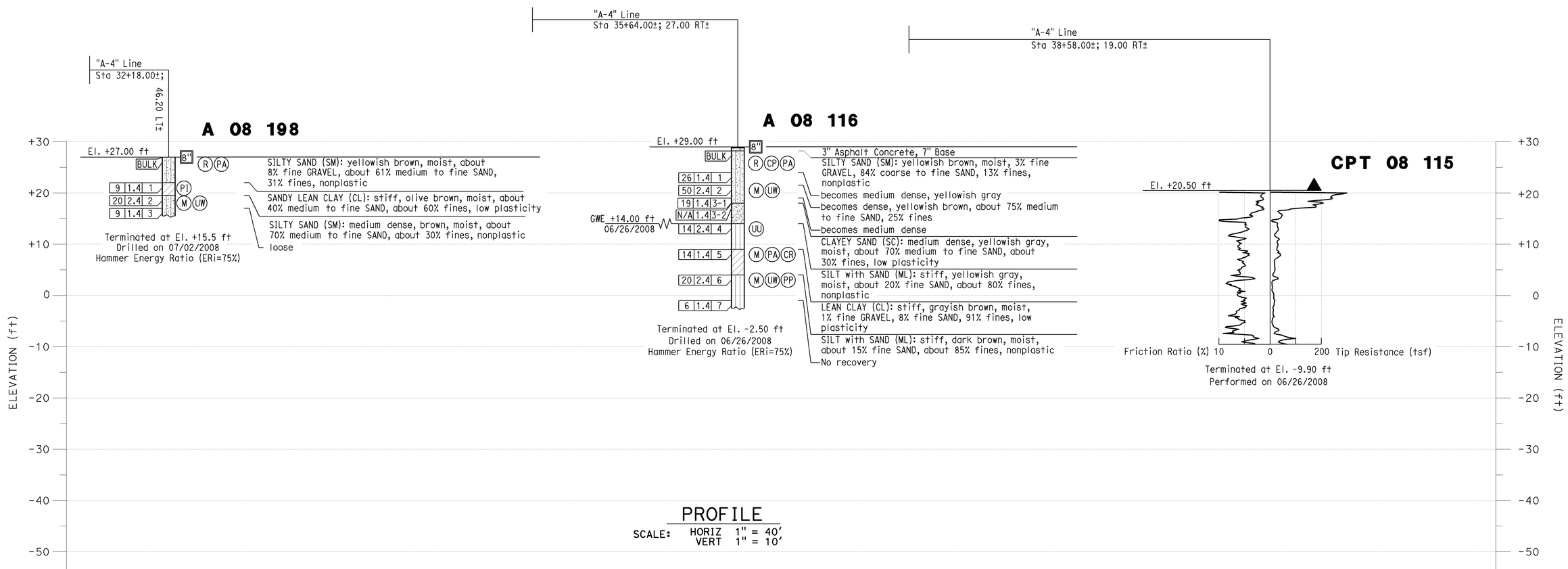

PROFILE

SCALE: HORIZ 1" = 40'
VERT 1" = 10'

LOG OF TEST BORINGS NO. 1
SW No. 202

SCALE AS SHOWN

SW-4

STATE OF CALIFORNIA - DEPARTMENT OF TRANSPORTATION
Caltrans

CONSULTANT FUNCTIONAL SUPERVISOR: K.ARULMOLI
CALCULATED-DESIGNED BY: J.FANG
CHECKED BY: G.J.GUNARANJAN
REVISED BY: K.P
DATE REVISED: 08/10/09

LAST REVISION 08-10-09
DATE PLOTTED => 04-FEB-2010
TIME PLOTTED => 10:51

Dist	COUNTY	ROUTE	POST MILES TOTAL PROJECT	SHEET No.	TOTAL SHEETS
12	Ora	22,405, 605	R0.3/R0.9, 22.3/24.0,3.0/R1.6	1118	1929

REGISTERED CIVIL ENGINEER 8/10/09 DATE

2-1-10
PLANS APPROVAL DATE

REGISTERED PROFESSIONAL ENGINEER ROSS E. LEW No. C53399 Exp. 6/30/11 CIVIL STATE OF CALIFORNIA

THE STATE OF CALIFORNIA OR ITS OFFICERS OR AGENTS SHALL NOT BE RESPONSIBLE FOR THE ACCURACY OR COMPLETENESS OF ELECTRONIC COPIES OF THIS PLAN SHEET.

TRC
21 TECHNOLOGY Dr
IRVINE, CA 92618

ORANGE COUNTY TRANSPORTATION AUTHORITY
550 S. MAIN STREET
ORANGE, CA 92863-1584

NOTE:

1. FOR COMPLETE RIGHT OF WAY AND ACCURATE ACCESS DATA, SEE RIGHT OF WAY RECORD MAPS AT DISTRICT OFFICE.
2. FOR AESTHETICS DETAILS, SEE SHEET SW-30.

LEGEND

B15-X / X-X — STANDARD PLAN SHEET No. / DETAIL No.

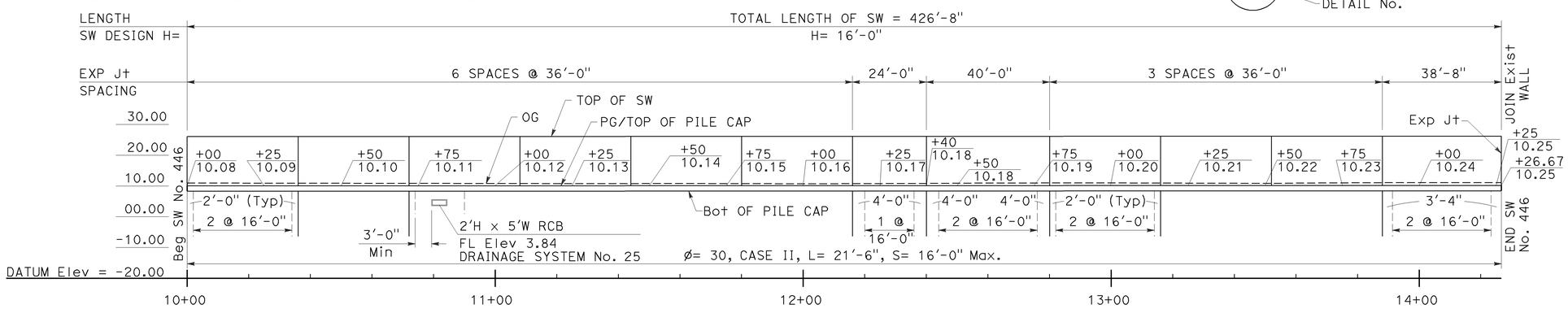

ELEVATION
SCALE: Horiz 1" = 20'
Vert 1" = 20'

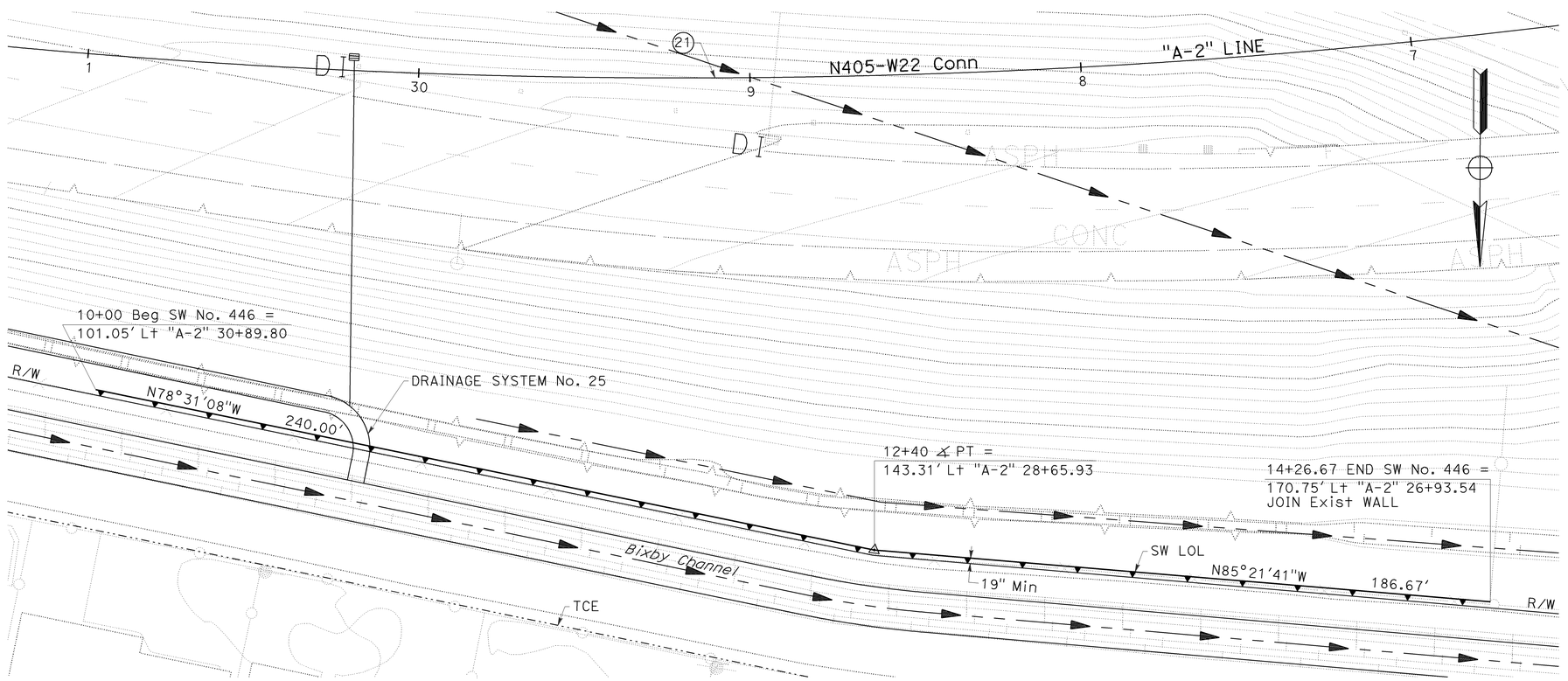

PLAN
SCALE: 1" = 20'

CURVE DATA				
No.	R	Δ	T	L
21	2,200.00'	17°37'48"	341.17'	676.94'

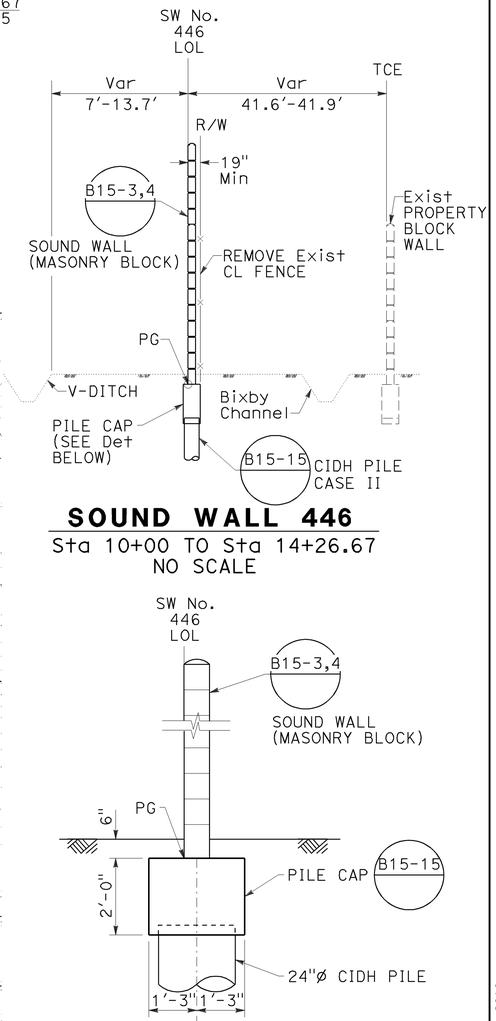

SOUND WALL 446
Sta 10+00 TO Sta 14+26.67
NO SCALE

DETAIL
NO SCALE

SOUND WALL PLAN SW No. 446

SCALE AS SHOWN

SW-5

THIS PLAN ACCURATE FOR SOUND WALL WORK ONLY.

STATE OF CALIFORNIA - DEPARTMENT OF TRANSPORTATION
Caltrans
CONSULTANT FUNCTIONAL SUPERVISOR: ROSS LEW
CALCULATED-DESIGNED BY: JASON YAW
CHECKED BY: ROSS LEW
REVISED BY: DBL
DATE REVISED: 8/10/09

LAST REVISION 08-10-09 DATE PLOTTED => 04-FEB-2010 TIME PLOTTED => 10:51

Dist	COUNTY	ROUTE	POST MILES TOTAL PROJECT	SHEET No.	TOTAL SHEETS
12	Ora	22,405, 605	R0.3/R0.9, 22.3/24.0,3.0/R1.6	1119	1929

REGISTERED CIVIL ENGINEER 08/10/09 DATE

2-1-10
PLANS APPROVAL DATE

REGISTERED PROFESSIONAL ENGINEER ANDREW V. KORKOS No. GE 2357 Exp. 03/31/10 GEOTECHNICAL STATE OF CALIFORNIA

THE STATE OF CALIFORNIA OR ITS OFFICERS OR AGENTS SHALL NOT BE RESPONSIBLE FOR THE ACCURACY OR COMPLETENESS OF ELECTRONIC COPIES OF THIS PLAN SHEET.

EARTH MECHANICS, INC.
17660 NEWHOPE ST. SUITE E
FOUNTAIN VALLEY, CA 92708

OCTA
550 S. MAIN STREET
ORANGE, CA 92863-1584

BENCHMARKS:

Monument: 1A-144-04

Described by OCS 2005 - Found 3.75" OCS aluminum benchmark disk stamped "1A-144-04", set in the southwesterly corner of a 4.4 ft by 4.4 ft concrete catch basin. Monument is located in the northeasterly corner of the intersection of Seal Beach Boulevard and St. Cloud Drive, 44 ft easterly of the centerline of Seal Beach Boulevard and 58 ft northerly of the centerline of St. Cloud Dr. Monument is set level with the sidewalk.

Elevation: 15.37 feet

NOTES:

(1) This LOTB sheet (Boring Record) was prepared in accordance with the Caltrans Soil and Rock Classification Logging, Classification and Presentation Manual (June 2007).

(2) 2.4" samples were taken using a California Modified Sampler.

(3) A rope and cat-head hammer system consisting of a hammer weight of 140 lbs falling a distance of 30" was used to advance the drive sampler.

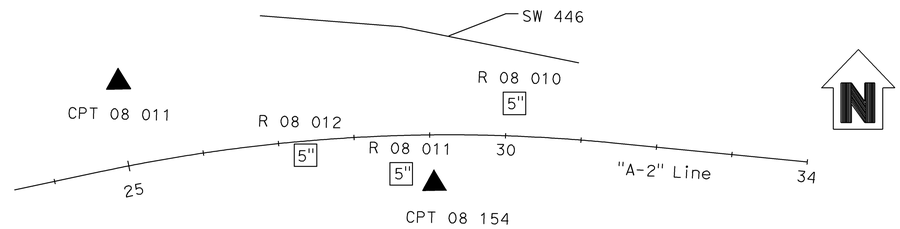

PLAN

SCALE: 1" = 100'

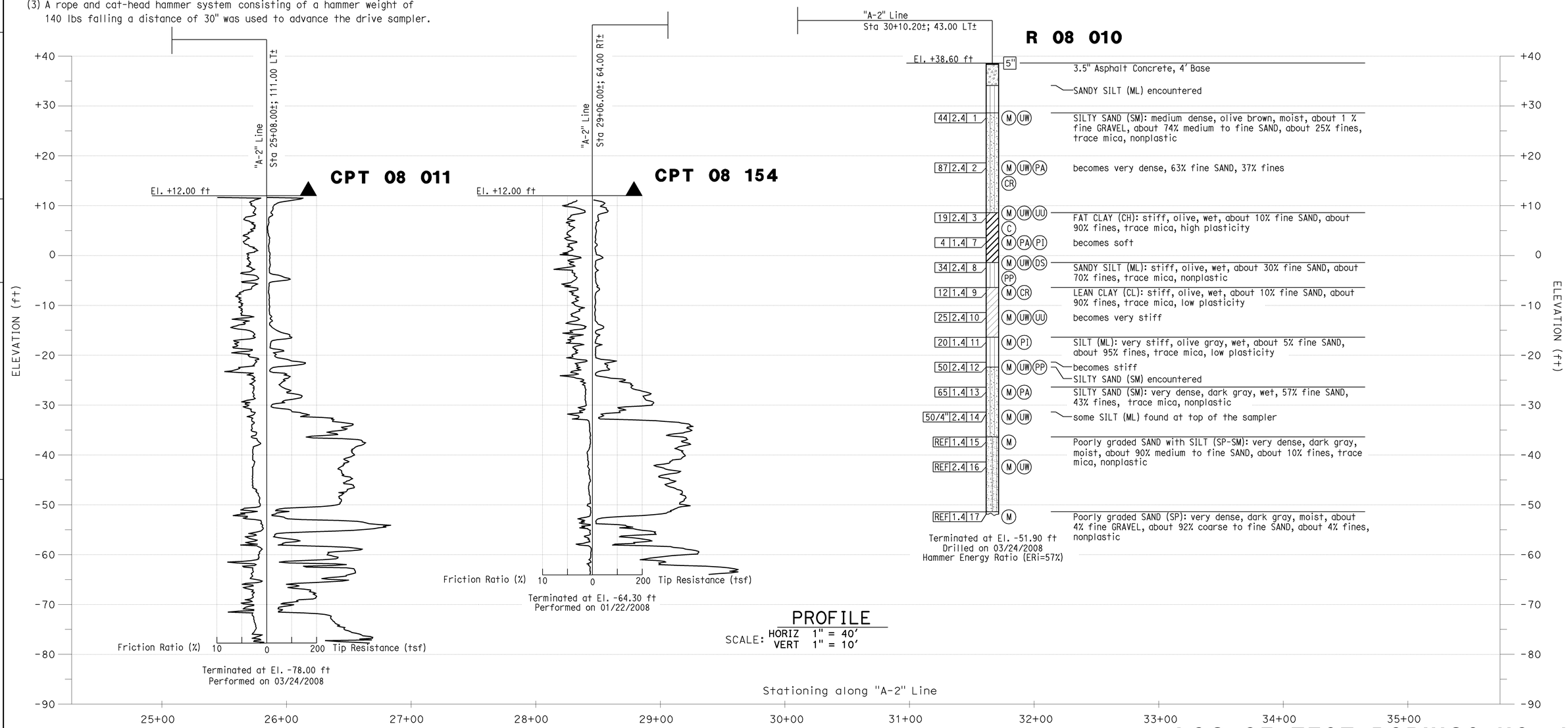

PROFILE

SCALE: HORIZ 1" = 40'
VERT 1" = 10'

LOG OF TEST BORINGS NO. 1
SW No. 446

SCALE AS SHOWN

SW-6

STATE OF CALIFORNIA - DEPARTMENT OF TRANSPORTATION
Caltrans

CONSULTANT FUNCTIONAL SUPERVISOR: K.ARULMOLI
CALCULATED-DESIGNED BY: J.FANG
CHECKED BY: G.J.GUNARANJAN
REVISED BY: K.P
DATE REVISED: 08/10/09

LAST REVISION DATE PLOTTED => 04-FEB-2010
TIME PLOTTED => 10:51
08-10-09

Dist	COUNTY	ROUTE	POST MILES TOTAL PROJECT	SHEET No.	TOTAL SHEETS
12	Ora	22,405, 605	R0.3/R0.9, 22.3/24.0,3.0/R1.6	1120	1929

REGISTERED CIVIL ENGINEER 08/10/09 DATE

2-1-10
PLANS APPROVAL DATE

REGISTERED PROFESSIONAL ENGINEER ANDREW V. KORKOS No. GE 2357 Exp. 03/31/10 GEOTECHNICAL STATE OF CALIFORNIA

THE STATE OF CALIFORNIA OR ITS OFFICERS OR AGENTS SHALL NOT BE RESPONSIBLE FOR THE ACCURACY OR COMPLETENESS OF ELECTRONIC COPIES OF THIS PLAN SHEET.

EARTH MECHANICS, INC.
17660 NEWHOPE ST. SUITE E
FOUNTAIN VALLEY, CA 92708

OCTA
550 S. MAIN STREET
ORANGE, CA 92863-1584

BENCHMARKS:

Monument: 1A-144-04

Described by OCS 2005 - Found 3.75" OCS aluminum benchmark disk stamped "1A-144-04", set in the southwesterly corner of a 4.4 ft by 4.4 ft concrete catch basin. Monument is located in the northeasterly corner of the intersection of Seal Beach Boulevard and St. Cloud Drive, 44 ft easterly of the centerline of Seal Beach Boulevard and 58 ft northerly of the centerline of St. Cloud Dr. Monument is set level with the sidewalk.

Elevation: 15.37 feet

NOTES:

(1) This LOTB sheet (Boring Record) was prepared in accordance with the Caltrans Soil and Rock Classification Logging, Classification and Presentation Manual (June 2007).

(2) 2.4" samples were taken using a California Modified Sampler.

(3) A rope and cat-head hammer system consisting of a hammer weight of 140 lbs falling a distance of 30" was used to advance the drive sampler.

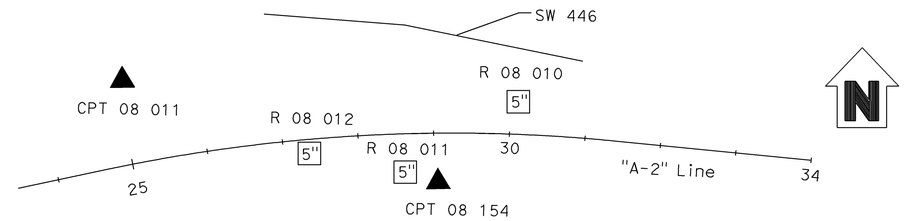

PLAN

SCALE: 1" = 100'

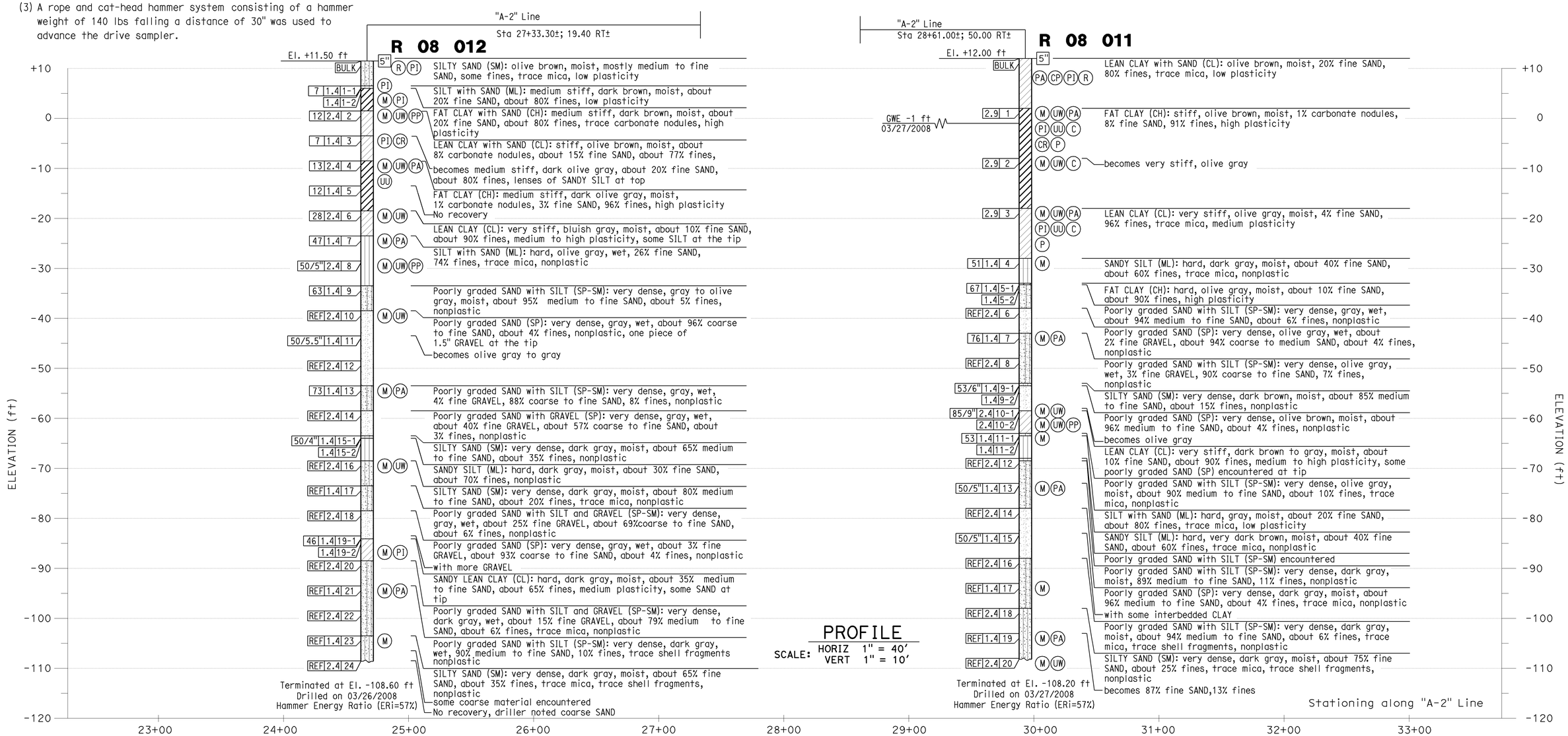

PROFILE

SCALE: HORIZ 1" = 40'
VERT 1" = 10'

LOG OF TEST BORINGS NO. 2
SW No. 446

SCALE AS SHOWN

SW-7

STATE OF CALIFORNIA - DEPARTMENT OF TRANSPORTATION
Caltrans

CONSULTANT FUNCTIONAL SUPERVISOR: K.ARULMOLI
CALCULATED-DESIGNED BY: G.J.GUNARANJAN
CHECKED BY: J.FANG
REVISED BY: K.P
DATE REVISED: 08/10/09

LAST REVISION 08-10-09 DATE PLOTTED => 04-FEB-2010 TIME PLOTTED => 10:51

Dist	COUNTY	ROUTE	POST MILES TOTAL PROJECT	SHEET No.	TOTAL SHEETS
12	Ora	22,405, 605	R0.3/R0.9, 22.3/24.0,3.0/R1.6	1121	1929

REGISTERED CIVIL ENGINEER 8/10/09 DATE

2-1-10
PLANS APPROVAL DATE

REGISTERED PROFESSIONAL ENGINEER ROSS E. LEW No. C53399 Exp. 6/30/11 CIVIL STATE OF CALIFORNIA

THE STATE OF CALIFORNIA OR ITS OFFICERS OR AGENTS SHALL NOT BE RESPONSIBLE FOR THE ACCURACY OR COMPLETENESS OF ELECTRONIC COPIES OF THIS PLAN SHEET.

TRC
21 TECHNOLOGY Dr
IRVINE, CA 92618

ORANGE COUNTY
TRANSPORTATION AUTHORITY
550 S. MAIN STREET
ORANGE, CA 92863-1584

NOTES:

1. FOR COMPLETE RIGHT OF WAY AND ACCURATE ACCESS DATA, SEE RIGHT OF WAY RECORD MAPS AT DISTRICT OFFICE.
2. FOR AESTHETIC DETAILS, SEE SHEET SW-31.

LEGEND

B15-X — STANDARD PLAN SHEET No.
X-X — DETAIL No.

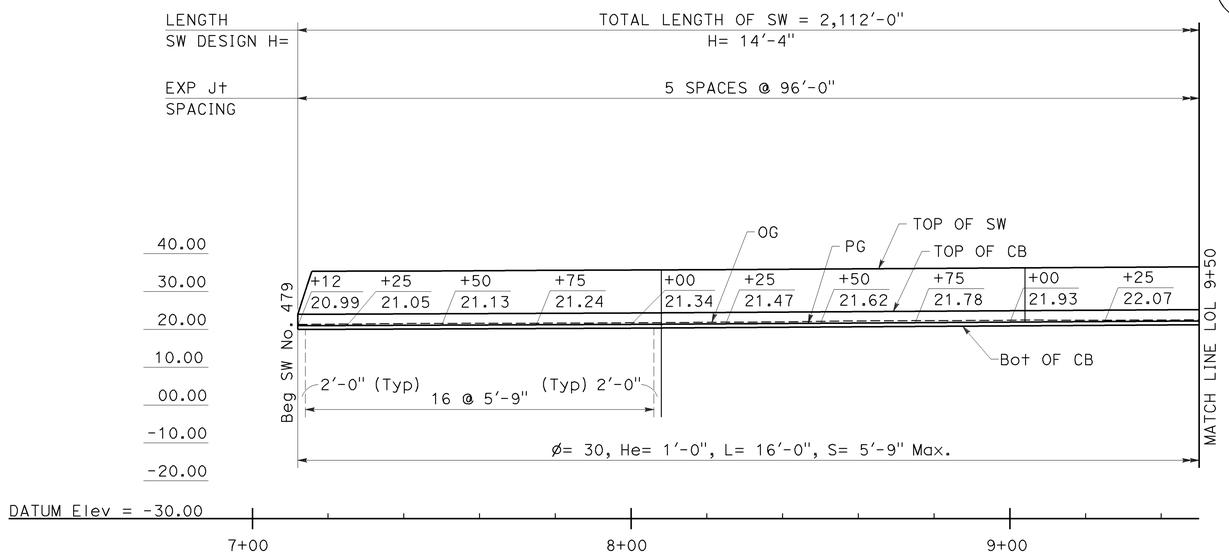

ELEVATION
SCALE: Horiz 1" = 20'
Vert 1" = 20'

CURVE DATA				
No.	R	Δ	T	L
1	2,112.85'	4°44'53"	87.60'	175.09'
2	1,775.14'	10°20'24"	160.61'	320.35'
70	987.53'	66°44'16"	650.39'	1,150.27'
47	1,956.56'	35°54'15"	633.92'	1,226.07'

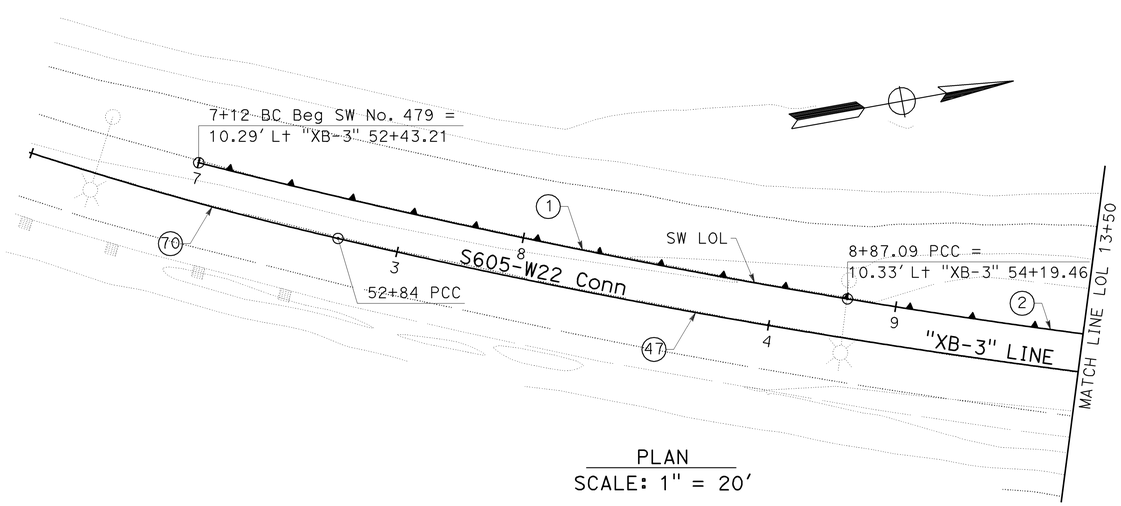

PLAN
SCALE: 1" = 20'

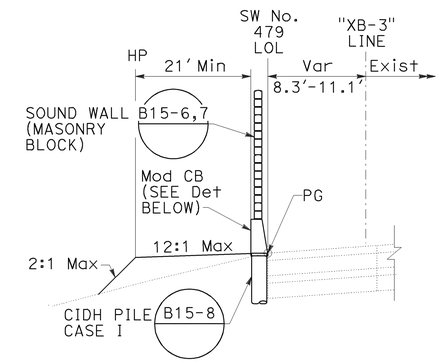

SOUND WALL 479

Sta 16+72 TO Sta 18+64
NO SCALE

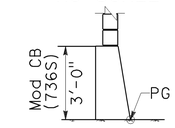

NOTE:
SEE RSP B15-6 FOR ADDITIONAL DETAILS NOT SHOWN.

DETAIL

Sta 17+03.50 TO Sta 17+10.50
Sta 17+42.23 TO Sta 17+49.23
Sta 17+72.50 TO Sta 17+79.50

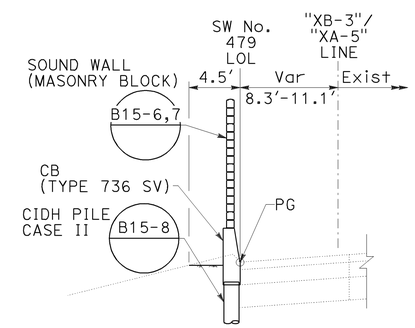

SOUND WALL 479

Sta 7+12 TO Sta 16+72
Sta 18+64 TO Sta 28+24
NO SCALE

SOUND WALL PLAN
SW No. 479

SCALE AS SHOWN

SW-8

THIS PLAN ACCURATE FOR SOUND WALL WORK ONLY.

DBL	8/10/09	REVISED BY / DATE REVISED
JASON YAW	ROSS LEW	CALCULATED-DESIGNED BY / CHECKED BY
ROSS LEW		CONSULTANT FUNCTIONAL SUPERVISOR

STATE OF CALIFORNIA - DEPARTMENT OF TRANSPORTATION
Caltrans

LAST REVISION 08-10-09 DATE PLOTTED => 04-FEB-2010 TIME PLOTTED => 10:51

Dist	COUNTY	ROUTE	POST MILES TOTAL PROJECT	SHEET No.	TOTAL SHEETS
12	Ora	22,405, 605	R0.3/R0.9, 22.3/24.0,3.0/R1.6	1122	1929

REGISTERED CIVIL ENGINEER 8/10/09 DATE

2-1-10
PLANS APPROVAL DATE

REGISTERED PROFESSIONAL ENGINEER ROSS E. LEW No. C53399 Exp. 6/30/11 CIVIL STATE OF CALIFORNIA

THE STATE OF CALIFORNIA OR ITS OFFICERS OR AGENTS SHALL NOT BE RESPONSIBLE FOR THE ACCURACY OR COMPLETENESS OF ELECTRONIC COPIES OF THIS PLAN SHEET.

TRC
21 TECHNOLOGY Dr
IRVINE, CA 92618

ORANGE COUNTY
TRANSPORTATION AUTHORITY
550 S. MAIN STREET
ORANGE, CA 92863-1584

NOTES:

1. FOR COMPLETE RIGHT OF WAY AND ACCURATE ACCESS DATA, SEE RIGHT OF WAY RECORD MAPS AT DISTRICT OFFICE.
2. PROVIDE 12" MINIMUM PILE CLEARANCE TO ALL EXISTING UNDERGROUND FACILITIES.

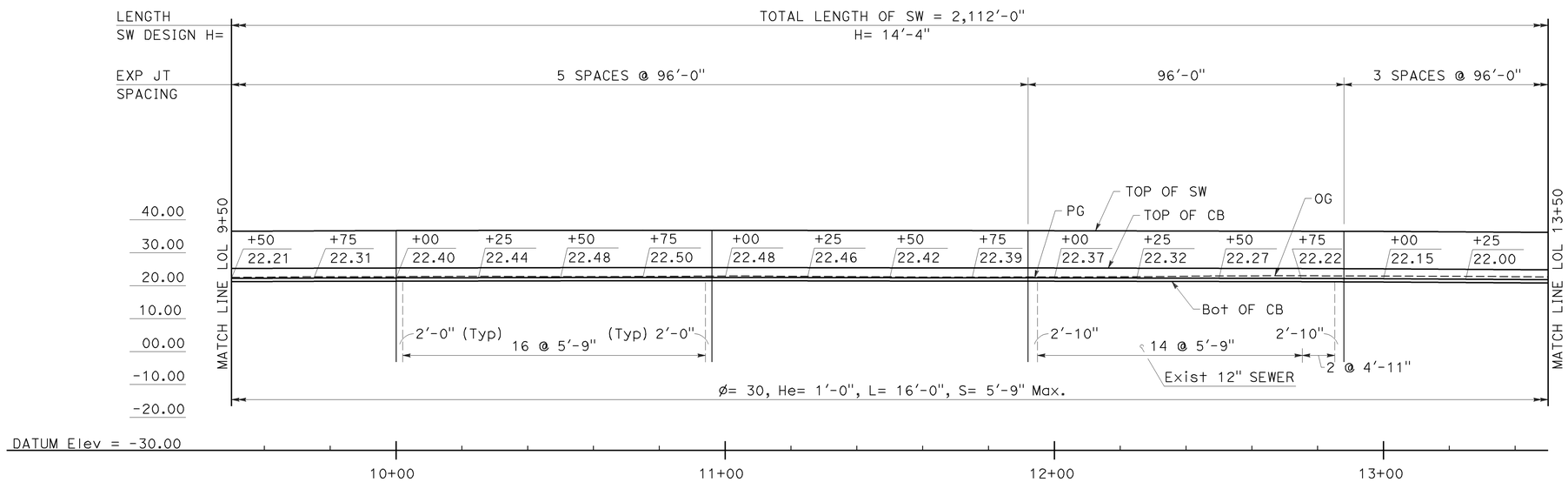

ELEVATION
SCALE: Horiz 1" = 20'
Vert 1" = 20'

CURVE DATA				
No.	R	Δ	T	L
2	1,775.14'	10°20'24"	160.61'	320.35'
3	2,289.83'	6°51'34"	137.23'	274.14'
47	1,956.56'	35°54'15"	633.92'	1,226.07'

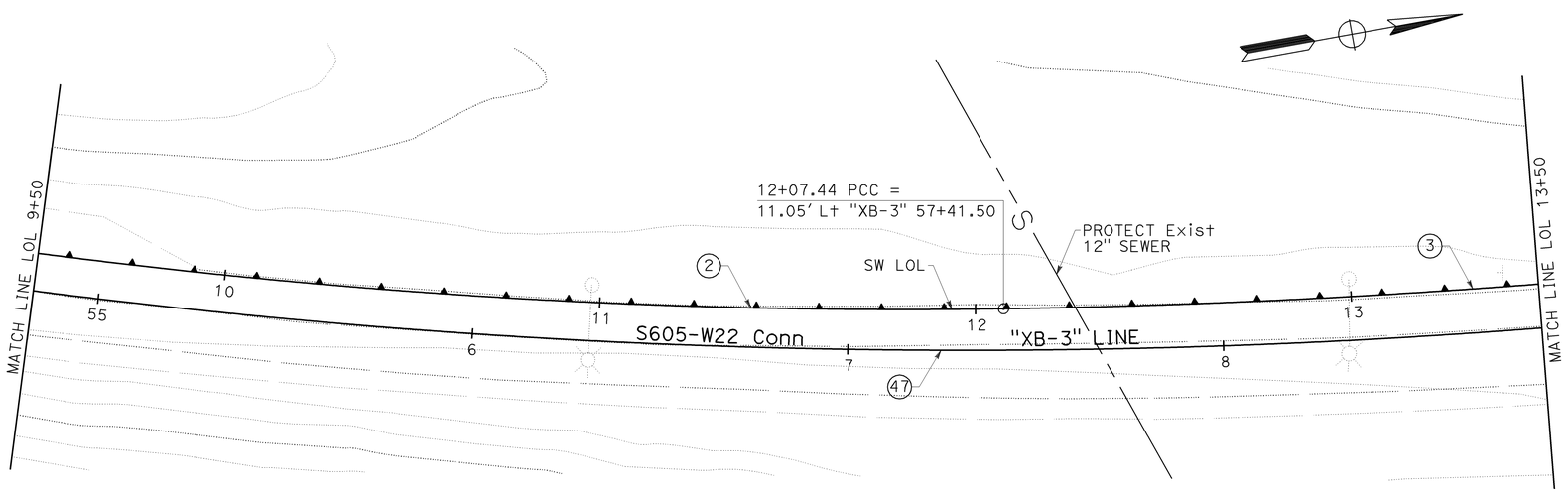

PLAN
SCALE: 1" = 20'

SOUND WALL PLAN
SW No. 479

SCALE AS SHOWN

SW-9

THIS PLAN ACCURATE FOR SOUND WALL WORK ONLY.

REVISED BY	DATE REVISED
DBL	8/10/09

JASON YAW — ROSS LEW
CALCULATED-DESIGNED BY — CHECKED BY
CONSULTANT FUNCTIONAL SUPERVISOR — ROSS LEW

STATE OF CALIFORNIA - DEPARTMENT OF TRANSPORTATION
Caltrans

LAST REVISION DATE PLOTTED => 04-FEB-2010
08-10-09 TIME PLOTTED => 10:51

Dist	COUNTY	ROUTE	POST MILES TOTAL PROJECT	SHEET No.	TOTAL SHEETS
12	Ora	22,405, 605	R0.3/R0.9, 22.3/24.0,3.0/R1.6	1123	1929

REGISTERED CIVIL ENGINEER 8/10/09 DATE

2-1-10
PLANS APPROVAL DATE

REGISTERED PROFESSIONAL ENGINEER ROSS E. LEW No. C53399 Exp. 6/30/11 CIVIL STATE OF CALIFORNIA

THE STATE OF CALIFORNIA OR ITS OFFICERS OR AGENTS SHALL NOT BE RESPONSIBLE FOR THE ACCURACY OR COMPLETENESS OF ELECTRONIC COPIES OF THIS PLAN SHEET.

TRC
21 TECHNOLOGY Dr
IRVINE, CA 92618

ORANGE COUNTY
TRANSPORTATION AUTHORITY
550 S. MAIN STREET
ORANGE, CA 92863-1584

NOTES:

1. FOR COMPLETE RIGHT OF WAY AND ACCURATE ACCESS DATA, SEE RIGHT OF WAY RECORD MAPS AT DISTRICT OFFICE.
2. PROVIDE 12" MINIMUM PILE CLEARANCE TO ALL EXISTING UNDERGROUND FACILITIES.

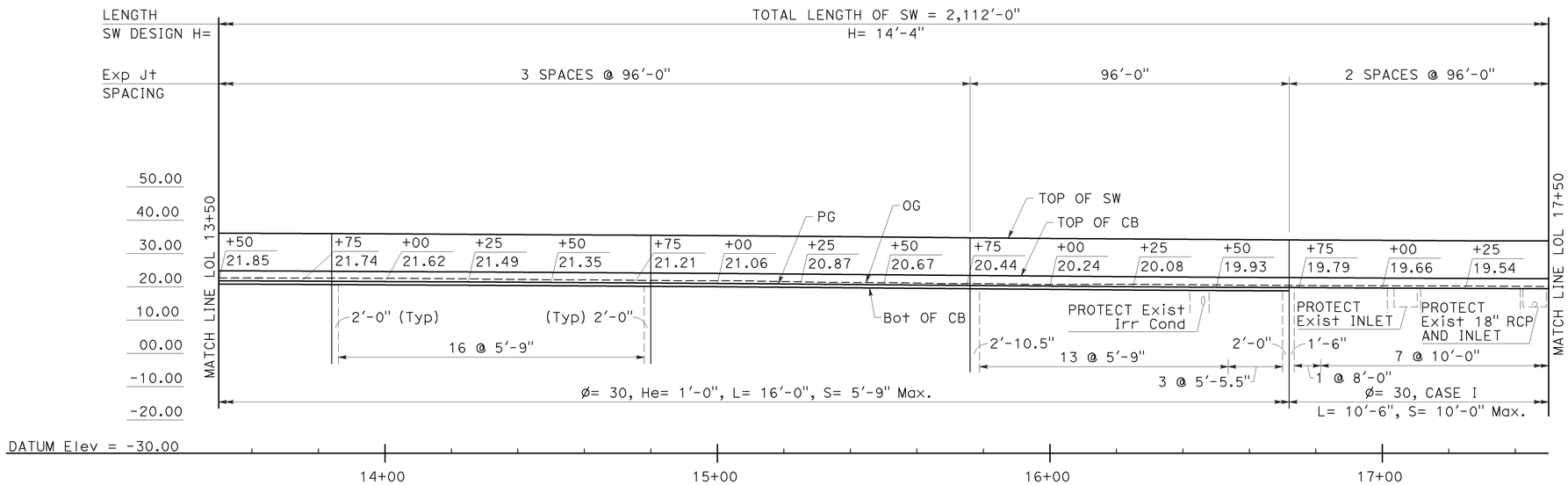

ELEVATION
SCALE: Horiz 1" = 20'
Vert 1" = 20'

CURVE DATA				
No.	R	Δ	T	L
3	2,289.83'	6°51'34"	137.23'	274.14'
4	1,725.14'	10°26'44"	157.69'	314.51'
47	1,956.56'	35°54'15"	633.92'	1,226.07'

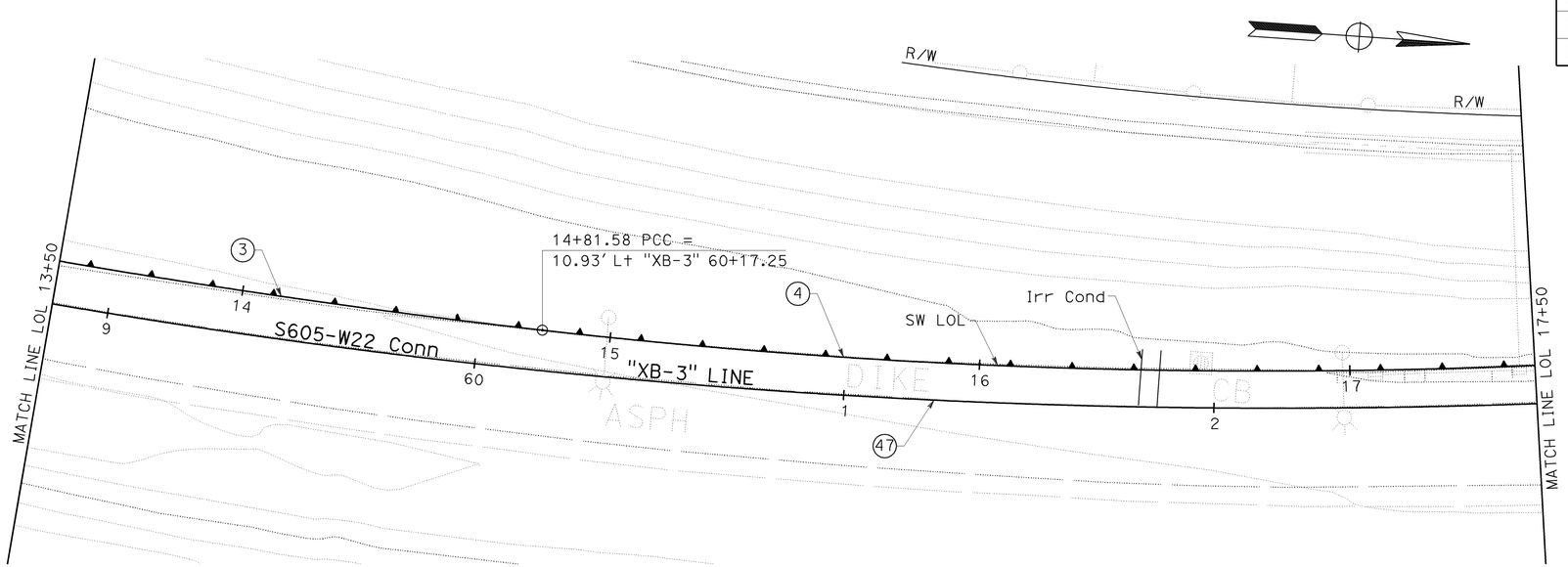

PLAN
SCALE: 1" = 20'

SOUND WALL PLAN
SW No. 479

SCALE AS SHOWN

SW-10

THIS PLAN ACCURATE FOR SOUND WALL WORK ONLY.

STATE OF CALIFORNIA - DEPARTMENT OF TRANSPORTATION
Caltrans

CONSULTANT FUNCTIONAL SUPERVISOR: ROSS LEW
CALCULATED-DESIGNED BY: JASON YAW
CHECKED BY: ROSS LEW
REVISED BY: DBL
DATE REVISED: 8/10/09

LAST REVISION DATE PLOTTED => 04-FEB-2010
TIME PLOTTED => 10:52
08-10-09

Dist	COUNTY	ROUTE	POST MILES TOTAL PROJECT	SHEET No.	TOTAL SHEETS
12	Ora	22,405, 605	R0.3/R0.9, 22.3/24.0,3.0/R1.6	1124	1929

REGISTERED CIVIL ENGINEER 8/10/09 DATE

2-1-10
PLANS APPROVAL DATE

REGISTERED PROFESSIONAL ENGINEER ROSS E. LEW No. C53399 Exp. 6/30/11 CIVIL STATE OF CALIFORNIA

THE STATE OF CALIFORNIA OR ITS OFFICERS OR AGENTS SHALL NOT BE RESPONSIBLE FOR THE ACCURACY OR COMPLETENESS OF ELECTRONIC COPIES OF THIS PLAN SHEET.

TRC
21 TECHNOLOGY Dr
IRVINE, CA 92618

ORANGE COUNTY
TRANSPORTATION AUTHORITY
550 S. MAIN STREET
ORANGE, CA 92863-1584

NOTES:

1. FOR COMPLETE RIGHT OF WAY AND ACCURATE ACCESS DATA, SEE RIGHT OF WAY RECORD MAPS AT DISTRICT OFFICE.
2. PROVIDE 12" MINIMUM PILE CLEARANCE TO ALL EXISTING UNDERGROUND FACILITIES.

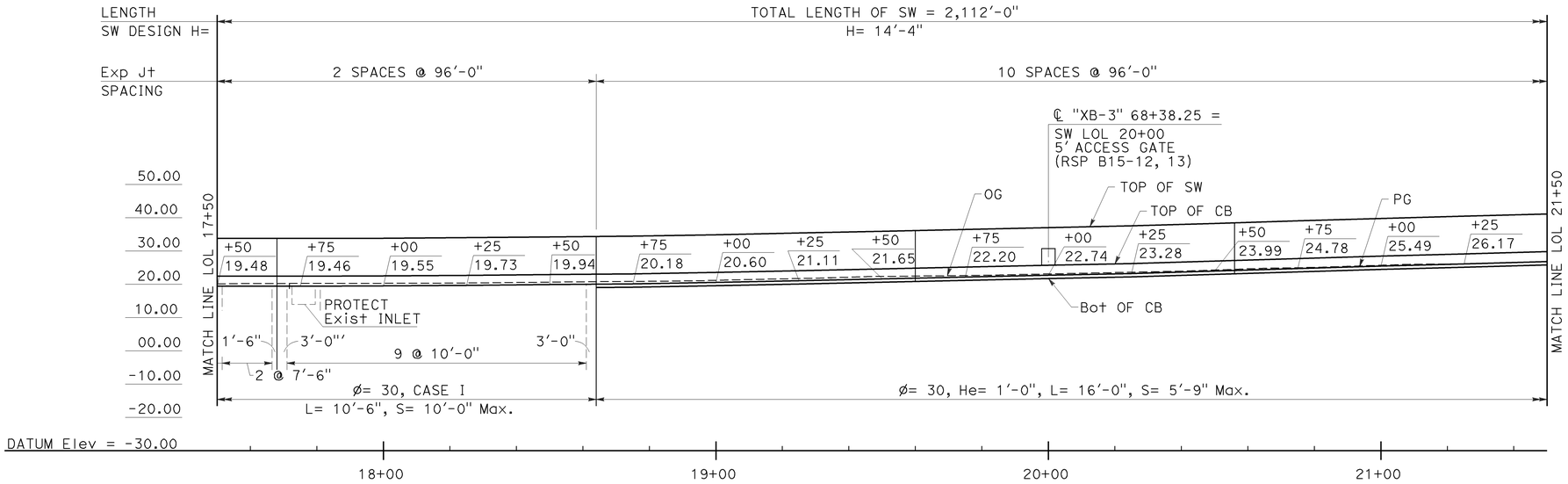

ELEVATION
SCALE: Horiz 1" = 20'
Vert 1" = 20'

CURVE DATA				
No.	R	Δ	T	L
4	1,725.14'	10°26'44"	157.69'	314.51'
5	3,186.07'	4°34'33"	127.29'	254.44'
47	1,956.56'	35°54'15"	633.92'	1,226.07'

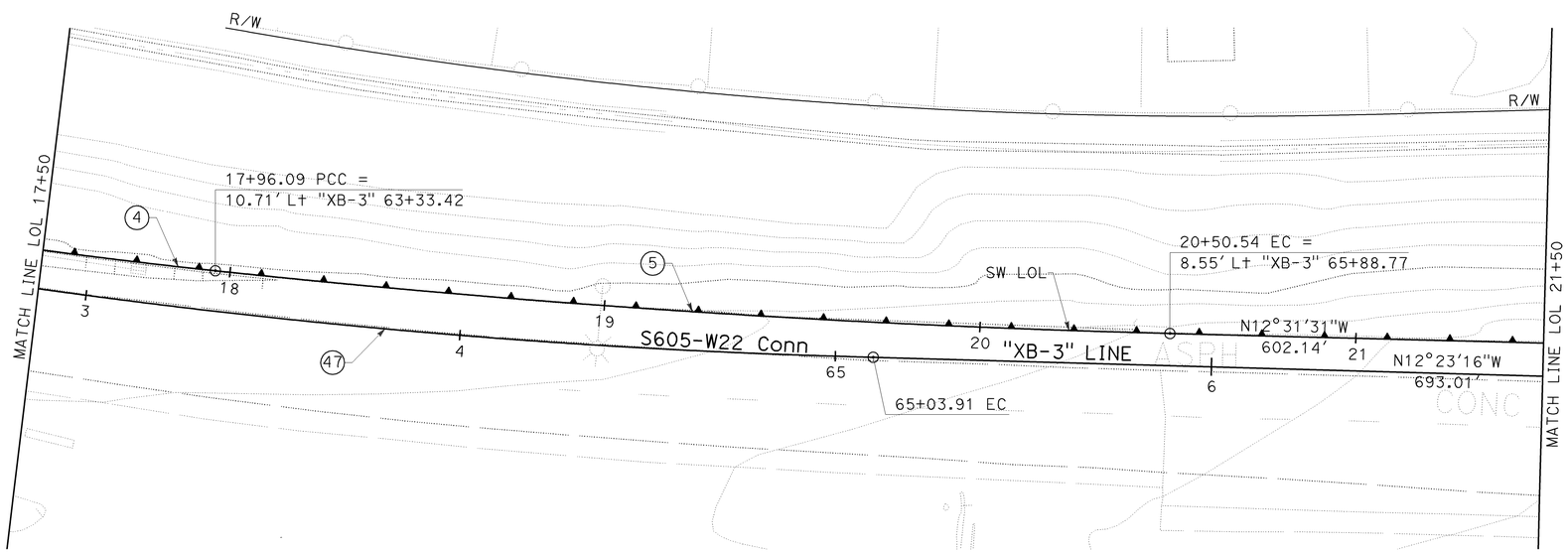

PLAN
SCALE: 1" = 20'

SOUND WALL PLAN
SW No. 479

SCALE AS SHOWN

SW-11

THIS PLAN ACCURATE FOR SOUND WALL WORK ONLY.

STATE OF CALIFORNIA - DEPARTMENT OF TRANSPORTATION
Caltrans
CONSULTANT FUNCTIONAL SUPERVISOR ROSS LEW
CALCULATED-DESIGNED BY ROSS LEW
CHECKED BY
REVISED BY DBL
DATE REVISED 8/10/09
JASON YAW

LAST REVISION 08-10-09
DATE PLOTTED => 04-FEB-2010
TIME PLOTTED => 10:52

Dist	COUNTY	ROUTE	POST MILES TOTAL PROJECT	SHEET No.	TOTAL SHEETS
12	Ora	22,405, 605	R0.3/R0.9, 22.3/24.0,3.0/R1.6	1125	1929

REGISTERED CIVIL ENGINEER 8/10/09 DATE

2-1-10
PLANS APPROVAL DATE

REGISTERED PROFESSIONAL ENGINEER ROSS E. LEW No. C53399 Exp. 6/30/11 CIVIL STATE OF CALIFORNIA

THE STATE OF CALIFORNIA OR ITS OFFICERS OR AGENTS SHALL NOT BE RESPONSIBLE FOR THE ACCURACY OR COMPLETENESS OF ELECTRONIC COPIES OF THIS PLAN SHEET.

TRC
21 TECHNOLOGY Dr
IRVINE, CA 92618

ORANGE COUNTY
TRANSPORTATION AUTHORITY
550 S. MAIN STREET
ORANGE, CA 92863-1584

NOTE:

1. FOR COMPLETE RIGHT OF WAY AND ACCURATE ACCESS DATA, SEE RIGHT OF WAY RECORD MAPS AT DISTRICT OFFICE.
2. PROVIDE 12" MINIMUM PILE CLEARANCE TO ALL EXISTING UNDERGROUND FACILITIES.

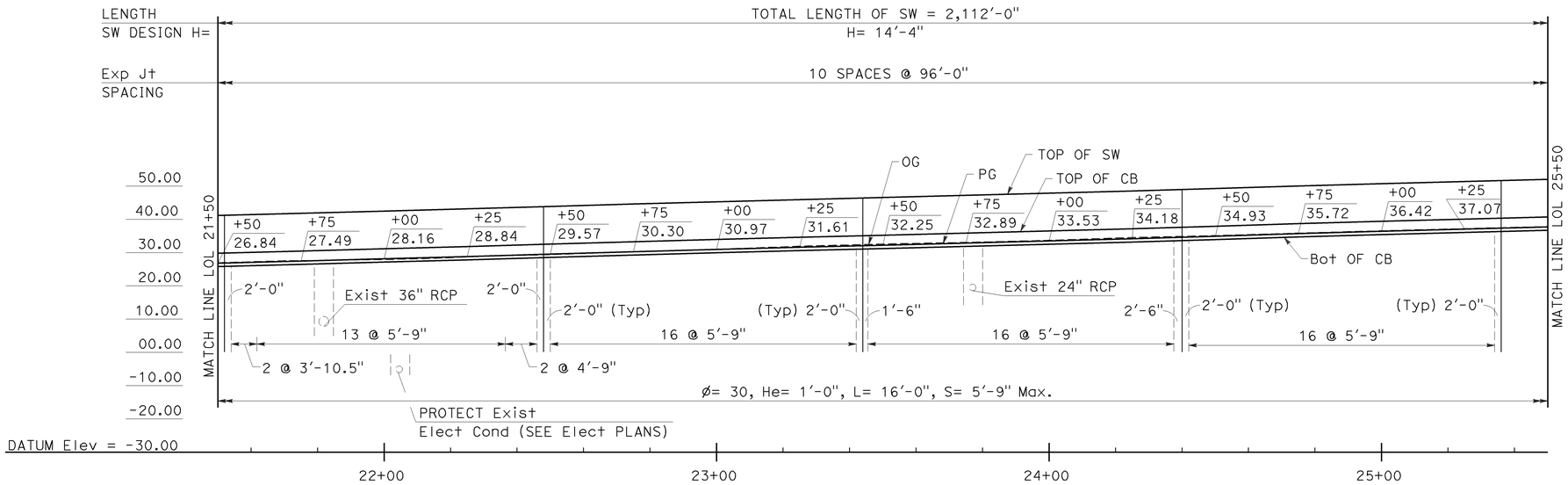

ELEVATION
SCALE: Horiz 1" = 20'
Vert 1" = 20'

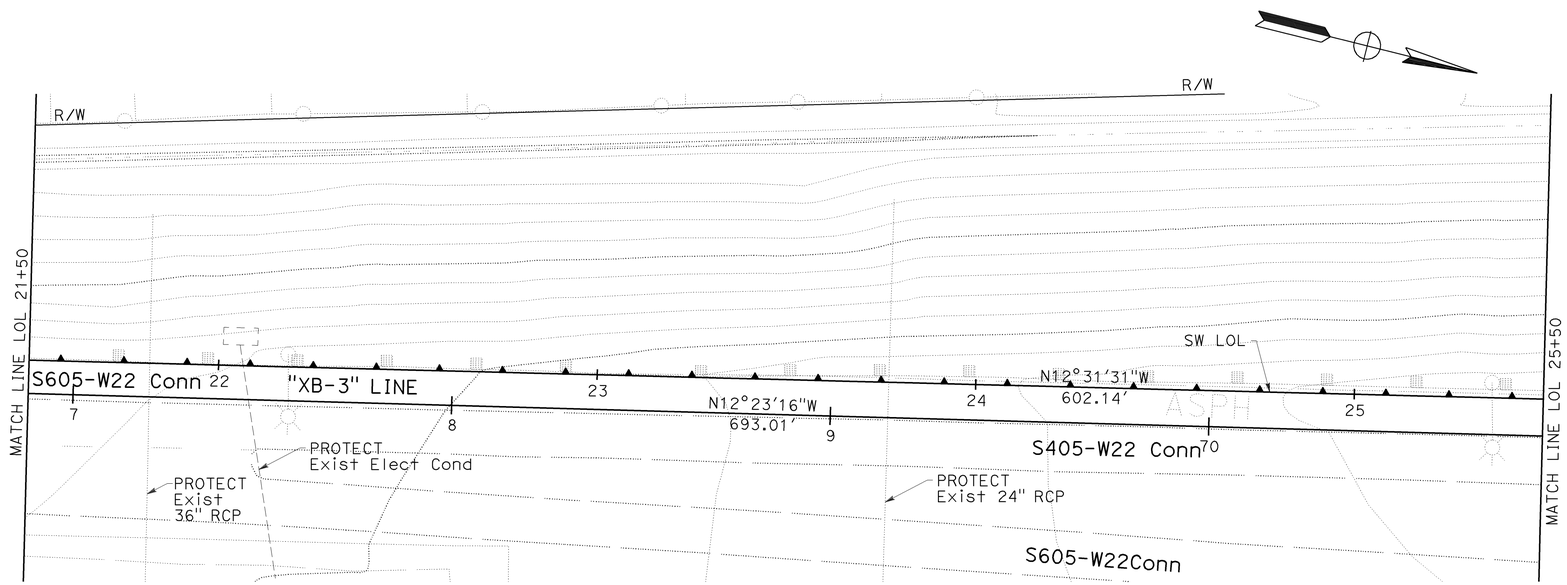

PLAN
SCALE: 1" = 20'

SOUND WALL PLAN
SW No. 479

SCALE AS SHOWN

SW-12

THIS PLAN ACCURATE FOR SOUND WALL WORK ONLY.

STATE OF CALIFORNIA - DEPARTMENT OF TRANSPORTATION
Caltrans

CONSULTANT FUNCTIONAL SUPERVISOR: ROSS LEW
CALCULATED-DESIGNED BY: JASON YAW
CHECKED BY: ROSS LEW
REVISED BY: DBL
DATE REVISED: 8/10/09

LAST REVISION DATE PLOTTED => 04-FEB-2010
TIME PLOTTED => 10:52

Dist	COUNTY	ROUTE	POST MILES TOTAL PROJECT	SHEET No.	TOTAL SHEETS
12	Ora	22,405, 605	R0.3/R0.9, 22.3/24.0,3.0/R1.6	1126	1929

REGISTERED CIVIL ENGINEER 8/10/09 DATE

2-1-10
PLANS APPROVAL DATE

REGISTERED PROFESSIONAL ENGINEER ROSS E. LEW No. C53399 Exp. 6/30/11 CIVIL STATE OF CALIFORNIA

THE STATE OF CALIFORNIA OR ITS OFFICERS OR AGENTS SHALL NOT BE RESPONSIBLE FOR THE ACCURACY OR COMPLETENESS OF ELECTRONIC COPIES OF THIS PLAN SHEET.

TRC
21 TECHNOLOGY Dr
IRVINE, CA 92618

ORANGE COUNTY
TRANSPORTATION AUTHORITY
550 S. MAIN STREET
ORANGE, CA 92863-1584

NOTE:

1. FOR COMPLETE RIGHT OF WAY AND ACCURATE ACCESS DATA, SEE RIGHT OF WAY RECORD MAPS AT DISTRICT OFFICE.
2. PROVIDE 12" MINIMUM PILE CLEARANCE TO ALL EXISTING UNDERGROUND FACILITIES.

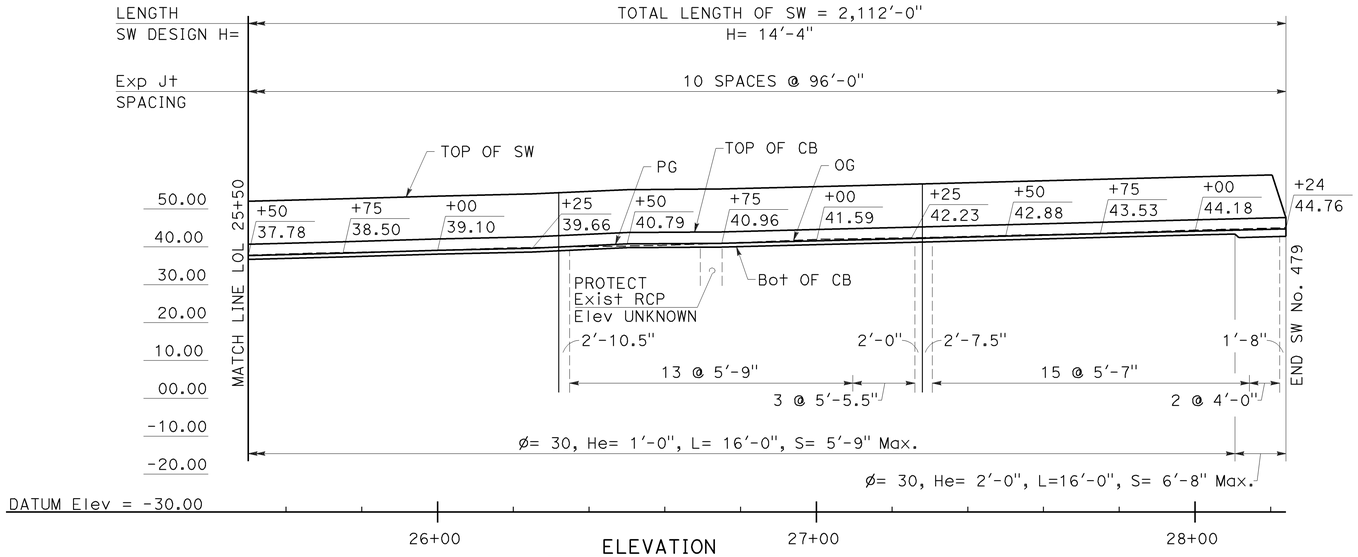

ELEVATION
SCALE: Horiz 1" = 20'
Vert 1" = 20'

CURVE DATA				
No.	R	Δ	T	L
6	2,510.00'	3°54'39"	85.70'	171.33'
44	2,500.00'	16°40'26"	366.36'	727.54'

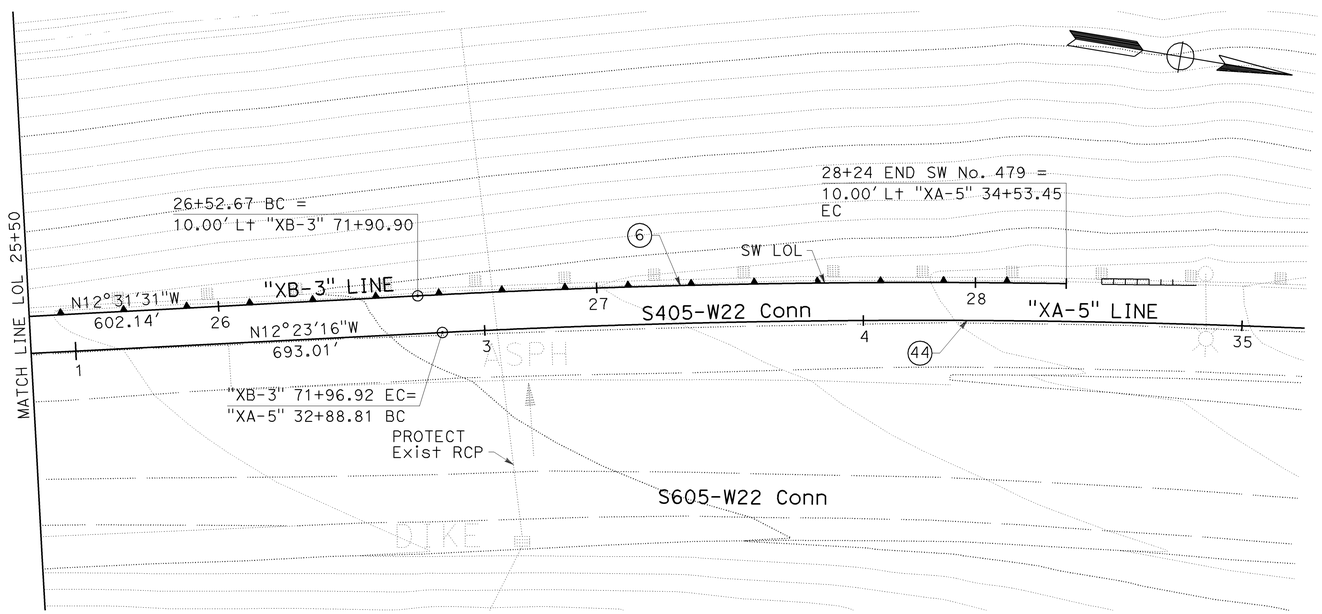

PLAN
SCALE: 1" = 20'

SOUND WALL PLAN
SW No. 479

SCALE AS SHOWN

SW-13

THIS PLAN ACCURATE FOR SOUND WALL WORK ONLY.

STATE OF CALIFORNIA - DEPARTMENT OF TRANSPORTATION
Caltrans

CONSULTANT FUNCTIONAL SUPERVISOR: ROSS LEW
CALCULATED-DESIGNED BY: JASON YAW
CHECKED BY: ROSS LEW
REVISED BY: DBL
DATE REVISED: 8/10/09

LAST REVISION DATE PLOTTED => 04-FEB-2010
TIME PLOTTED => 10:52
08-10-09

Dist	COUNTY	ROUTE	POST MILES TOTAL PROJECT	SHEET No.	TOTAL SHEETS
12	Ora	22,405, 605	R0.3/R0.9, 22.3/24.0,3.0/R1.6	1127	1929

REGISTERED CIVIL ENGINEER 08/10/09 DATE

2-1-10
PLANS APPROVAL DATE

REGISTERED PROFESSIONAL ENGINEER ANDREW V. KORKOS No. GE 2357 Exp. 03/31/10 GEOTECHNICAL STATE OF CALIFORNIA

THE STATE OF CALIFORNIA OR ITS OFFICERS OR AGENTS SHALL NOT BE RESPONSIBLE FOR THE ACCURACY OR COMPLETENESS OF ELECTRONIC COPIES OF THIS PLAN SHEET.

EARTH MECHANICS, INC.
17660 NEWHOPE ST. SUITE E
FOUNTAIN VALLEY, CA 92708

OCTA
550 S. MAIN STREET
ORANGE, CA 92863-1584

BENCHMARKS:

Monument: 1A-144-04

Described by OCS 2005 - Found 3.75" OCS aluminum benchmark disk stamped "1A-144-04", set in the southwesterly corner of a 4.4 ft by 4.4 ft concrete catch basin. Monument is located in the northeasterly corner of the intersection of Seal Beach Boulevard and St. Cloud Drive, 44 ft easterly of the centerline of Seal Beach Boulevard and 58 ft northerly of the centerline of St. Cloud Dr. Monument is set level with the sidewalk.

Elevation: 15.37 feet

NOTES:

(1) This LOTB sheet (Boring Record) was prepared in accordance with the Caltrans Soil and Rock Classification Logging, Classification and Presentation Manual (June 2007).

(2) 2.4" samples were taken using a California Modified Sampler.

(3) An automatic trip hammer system consisting of a hammer weight of 140 lbs falling a distance of 30" was used to advance the drive sampler.

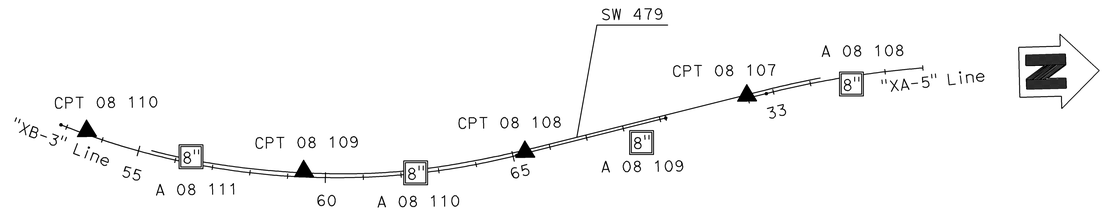

PLAN

SCALE: 1" = 200'

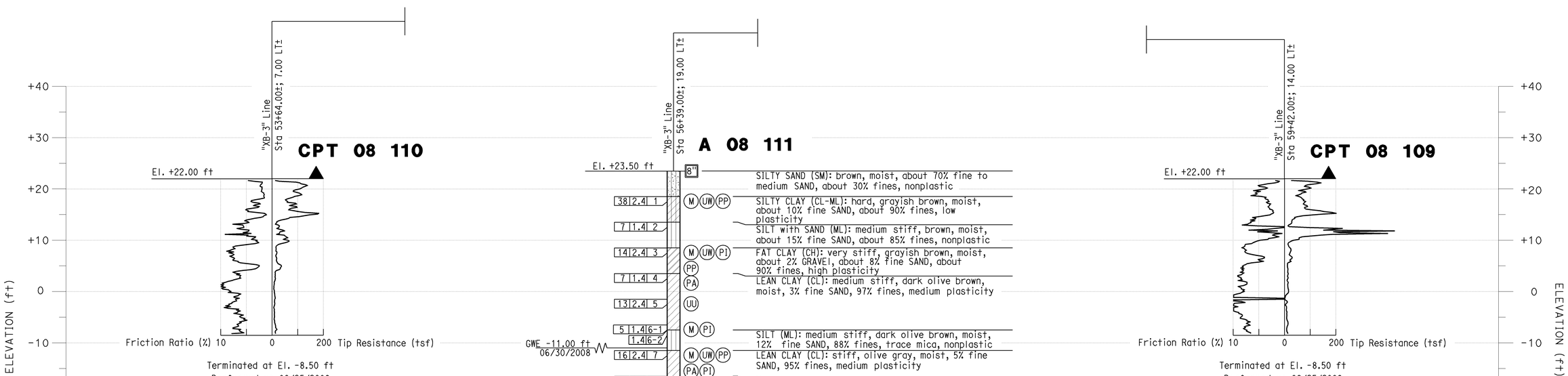

LOG OF TEST BORINGS NO. 1
SW No. 479
SCALE AS SHOWN

SW-14

STATE OF CALIFORNIA - DEPARTMENT OF TRANSPORTATION
Caltrans

CONSULTANT FUNCTIONAL SUPERVISOR: K.ARULMOLI
CALCULATED-DESIGNED BY: J.FANG
CHECKED BY: G.J.GUNARANJAN
REVISED BY: K.P
DATE REVISED: 08/10/09

LAST REVISION 08-10-09
DATE PLOTTED => 04-FEB-2010
TIME PLOTTED => 10:52

Dist	COUNTY	ROUTE	POST MILES TOTAL PROJECT	SHEET No.	TOTAL SHEETS
12	Ora	22,405, 605	R0.3/R0.9, 22.3/24.0,3.0/R1.6	1128	1929

REGISTERED CIVIL ENGINEER 08/10/09 DATE

2-1-10
PLANS APPROVAL DATE

REGISTERED PROFESSIONAL ENGINEER ANDREW V. KORKOS No. GE 2357 Exp. 03/31/10 GEOTECHNICAL STATE OF CALIFORNIA

THE STATE OF CALIFORNIA OR ITS OFFICERS OR AGENTS SHALL NOT BE RESPONSIBLE FOR THE ACCURACY OR COMPLETENESS OF ELECTRONIC COPIES OF THIS PLAN SHEET.

EARTH MECHANICS, INC.
17660 NEWHOPE ST. SUITE E
FOUNTAIN VALLEY, CA 92708

OCTA
550 S. MAIN STREET
ORANGE, CA 92863-1584

BENCHMARKS:

Monument: 1A-144-04

Described by OCS 2005 - Found 3.75" OCS aluminum benchmark disk stamped "1A-144-04", set in the southwesterly corner of a 4.4 ft by 4.4 ft concrete catch basin. Monument is located in the northeasterly corner of the intersection of Seal Beach Boulevard and St. Cloud Drive, 44 ft easterly of the centerline of Seal Beach Boulevard and 58 ft northerly of the centerline of St. Cloud Dr. Monument is set level with the sidewalk.

Elevation: 15.37 feet

NOTES:

(1) This LOTB sheet (Boring Record) was prepared in accordance with the Caltrans Soil and Rock Classification Logging, Classification and Presentation Manual (June 2007).

(2) 2.4" samples were taken using a California Modified Sampler.

(3) An automatic trip hammer system consisting of a hammer weight of 140 lbs falling a distance of 30" was used to advance the drive sampler.

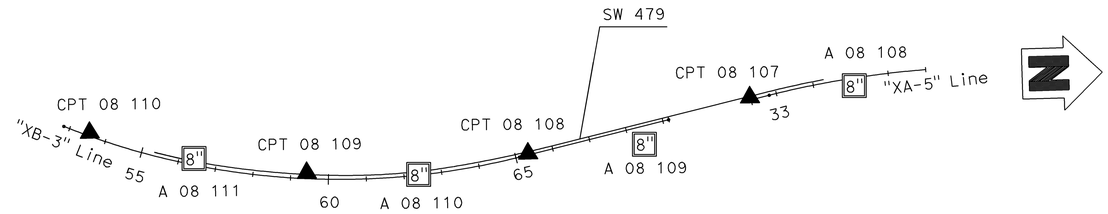

PLAN

SCALE: 1" = 200'

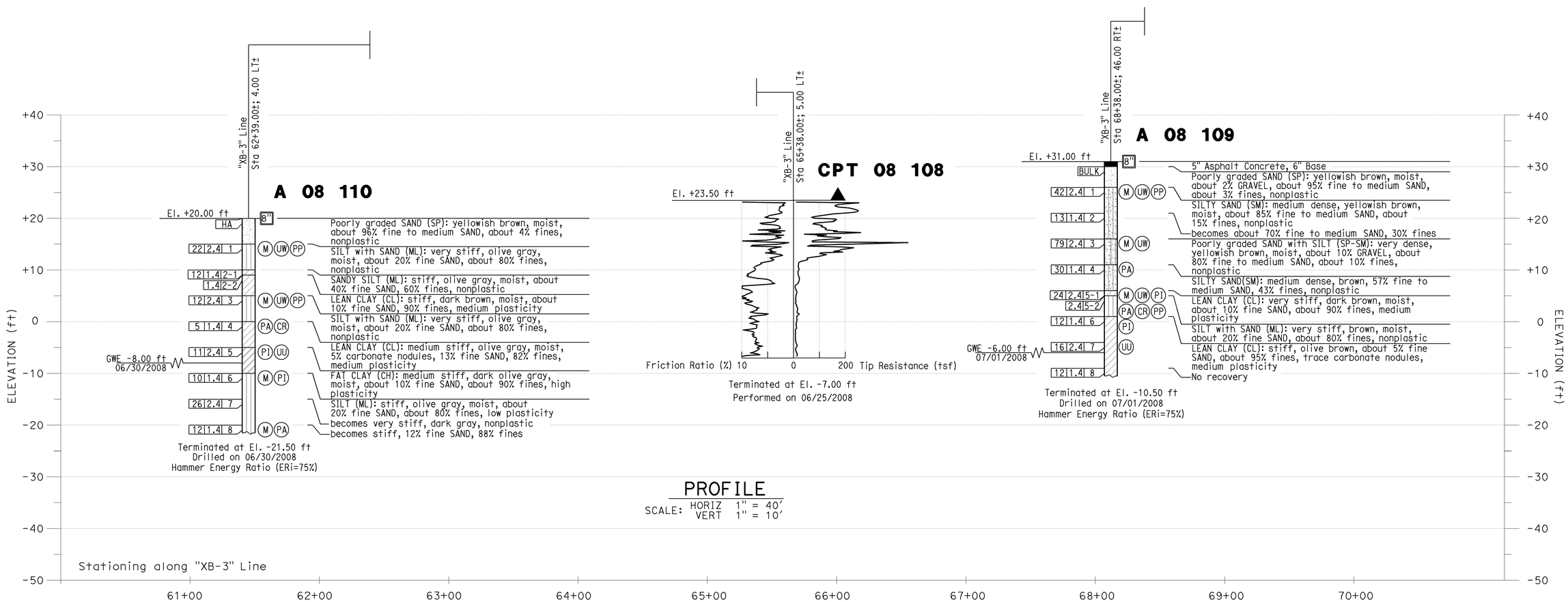

PROFILE

SCALE: HORIZ 1" = 40'
VERT 1" = 10'

LOG OF TEST BORINGS NO. 2
SW No. 479

SCALE AS SHOWN

SW-15

REVISED BY	DATE REVISED
K.P	08/10/09

CALCULATED-DESIGNED BY: J.FANG
CHECKED BY: G.J.GUNARANJAN
CONSULTANT FUNCTIONAL SUPERVISOR: K.ARULMOLI

STATE OF CALIFORNIA - DEPARTMENT OF TRANSPORTATION
Caltrans

LAST REVISION 08-10-09
DATE PLOTTED => 04-FEB-2010
TIME PLOTTED => 10:53

Dist	COUNTY	ROUTE	POST MILES TOTAL PROJECT	SHEET No.	TOTAL SHEETS
12	Ora	22,405, 605	R0.3/R0.9, 22.3/24.0,3.0/R1.6	1129	1929

REGISTERED CIVIL ENGINEER 08/10/09 DATE

2-1-10
PLANS APPROVAL DATE

REGISTERED PROFESSIONAL ENGINEER ANDREW V. KORKOS No. GE 2357 Exp. 03/31/10 GEOTECHNICAL STATE OF CALIFORNIA

THE STATE OF CALIFORNIA OR ITS OFFICERS OR AGENTS SHALL NOT BE RESPONSIBLE FOR THE ACCURACY OR COMPLETENESS OF ELECTRONIC COPIES OF THIS PLAN SHEET.

EARTH MECHANICS, INC.
17660 NEWHOPE ST. SUITE E
FOUNTAIN VALLEY, CA 92708

OCTA
550 S. MAIN STREET
ORANGE, CA 92863-1584

BENCHMARKS:

Monument: 1A-144-04

Described by OCS 2005 - Found 3.75" OCS aluminum benchmark disk stamped "1A-144-04", set in the southwesterly corner of a 4.4 ft by 4.4 ft concrete catch basin. Monument is located in the northeasterly corner of the intersection of Seal Beach Boulevard and St. Cloud Drive, 44 ft easterly of the centerline of Seal Beach Boulevard and 58 ft northerly of the centerline of St. Cloud Dr. Monument is set level with the sidewalk.

Elevation: 15.37 feet

NOTES:

(1) This LOTB sheet (Boring Record) was prepared in accordance with the Caltrans Soil and Rock Classification Logging, Classification and Presentation Manual (June 2007).

(2) 2.4" samples were taken using a California Modified Sampler.

(3) An automatic trip hammer system consisting of a hammer weight of 140 lbs falling a distance of 30" was used to advance the drive sampler.

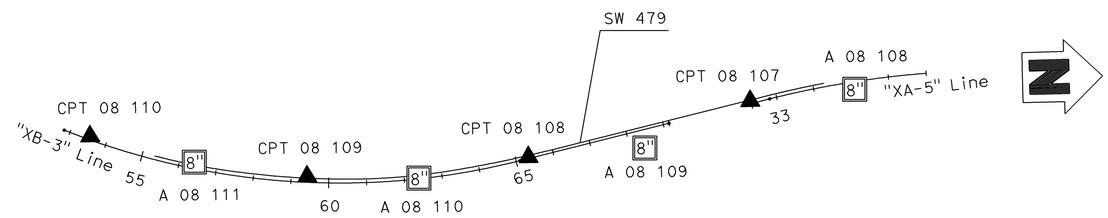

PLAN

SCALE: 1" = 200'

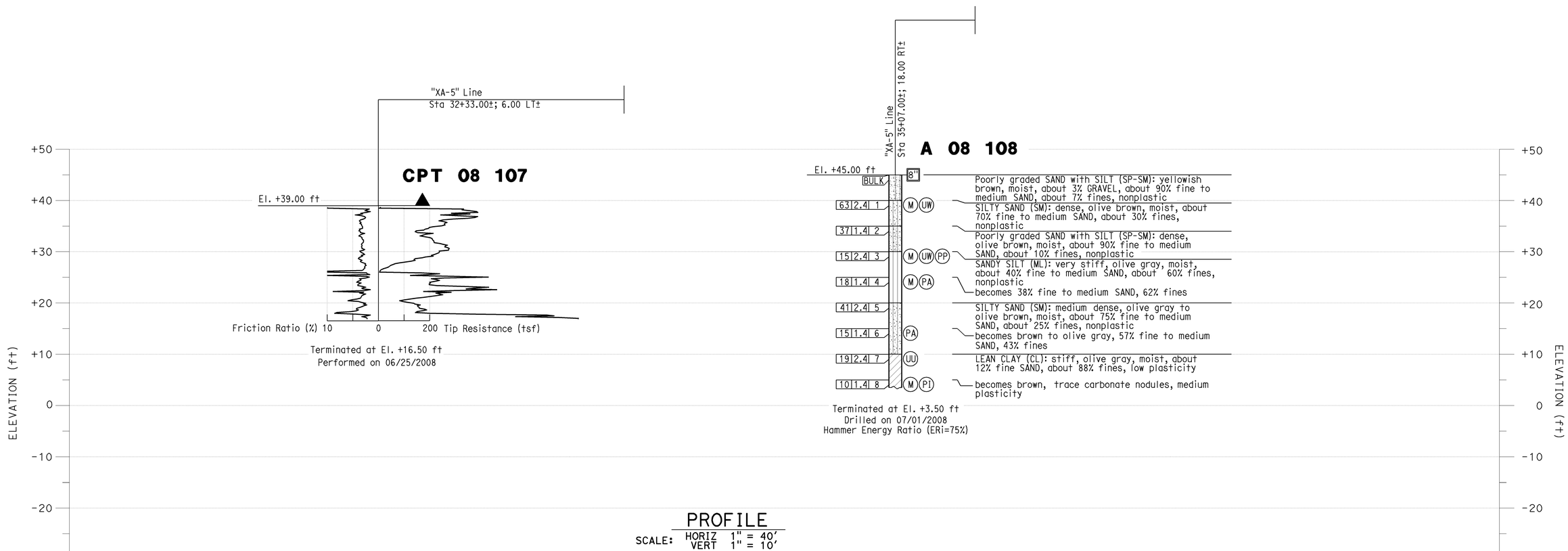

LOG OF TEST BORINGS NO. 3
SW No. 479

SCALE AS SHOWN

SW-16

REVISED BY	DATE REVISED
K.P	08/10/09

J.FANG — CALCULATED-DESIGNED BY
G.J.GUNARANJAN — CHECKED BY
K.ARULMOLI — CONSULTANT FUNCTIONAL SUPERVISOR

STATE OF CALIFORNIA - DEPARTMENT OF TRANSPORTATION
Caltrans

LAST REVISION 08-10-09 | DATE PLOTTED => 04-FEB-2010 | TIME PLOTTED => 10:53

Dist	COUNTY	ROUTE	POST MILES TOTAL PROJECT	SHEET No.	TOTAL SHEETS
12	Ora	22,405, 605	R0.3/R0.9, 22.3/24.0,3.0/R1.6	1130	1929

REGISTERED CIVIL ENGINEER 8/10/09 DATE

2-1-10
PLANS APPROVAL DATE

REGISTERED PROFESSIONAL ENGINEER ROSS E. LEW No. C53399 Exp. 6/30/11 CIVIL STATE OF CALIFORNIA

THE STATE OF CALIFORNIA OR ITS OFFICERS OR AGENTS SHALL NOT BE RESPONSIBLE FOR THE ACCURACY OR COMPLETENESS OF ELECTRONIC COPIES OF THIS PLAN SHEET.

TRC
21 TECHNOLOGY Dr
IRVINE, CA 92618

ORANGE COUNTY
TRANSPORTATION AUTHORITY
550 S. MAIN STREET
ORANGE, CA 92863-1584

NOTES:

1. FOR COMPLETE RIGHT OF WAY AND ACCURATE ACCESS DATA, SEE RIGHT OF WAY RECORD MAPS AT DISTRICT OFFICE.
2. SEE STANDARD PLAN A85 FOR CHAIN LINK GATE. GATE WIDTH IS MEASURED CENTER TO CENTER OF GATE POSTS.
3. PROVIDE 6" MINIMUM COVER OVER PG.
4. FOR AESTHETIC DETAILS, SEE SHEET SW-31.

LEGEND

B15-X — STANDARD PLAN SHEET No.
X-X — DETAIL No.

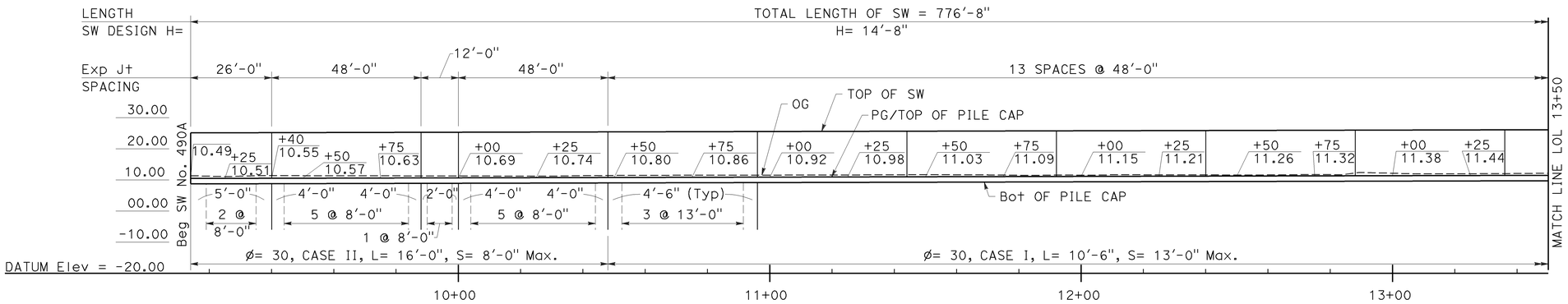

CURVE DATA				
No.	R	Δ	T	L
24	1,500.00'	15°10'36"	199.83'	397.33'

ELEVATION
SCALE: Horiz 1" = 20'
Vert 1" = 20'

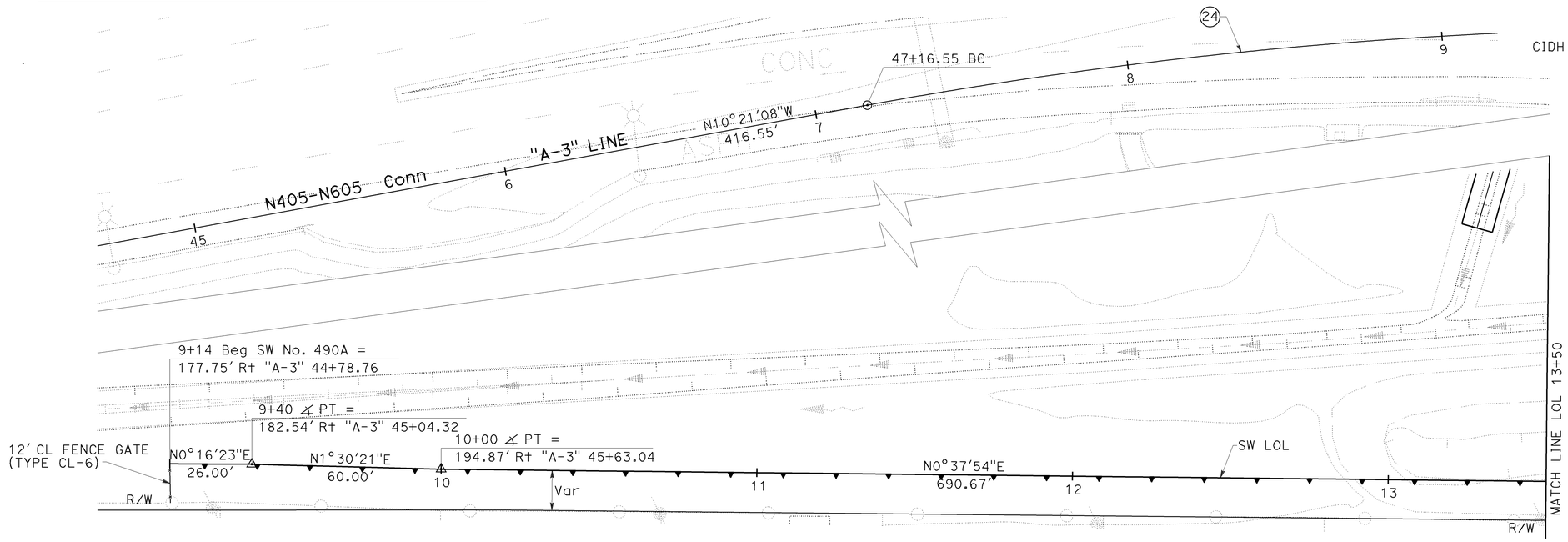

PLAN
SCALE: 1" = 20'

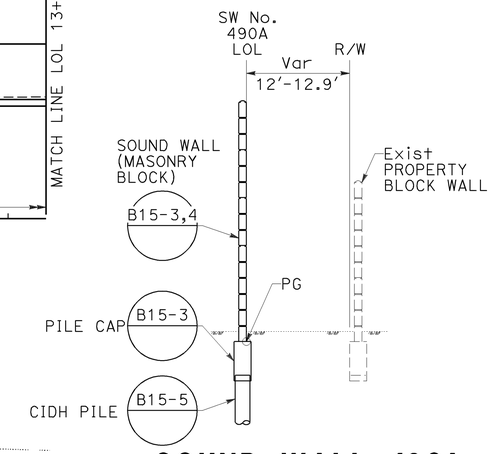

SOUND WALL 490A
Sta 9+14 TO Sta 16+54.67
NO SCALE

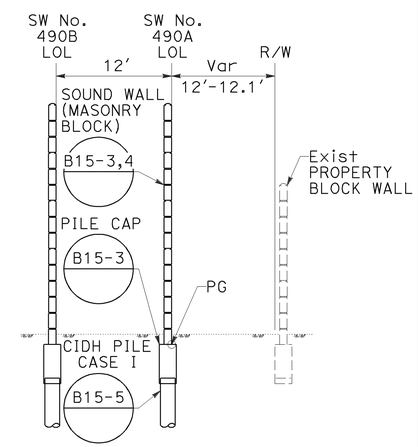

SOUND WALL 490A
Sta 16+54.67 TO Sta 16+90.67
NO SCALE

SOUND WALL PLAN
SW No. 490A

SCALE AS SHOWN

SW-17

THIS PLAN ACCURATE FOR SOUND WALL WORK ONLY.

STATE OF CALIFORNIA - DEPARTMENT OF TRANSPORTATION
Caltrans

CONSULTANT FUNCTIONAL SUPERVISOR: ROSS LEW
CALCULATED-DESIGNED BY: JASON YAW
CHECKED BY: ROSS LEW
REVISED BY: DBL
DATE REVISED: 8/10/09

LAST REVISION 08-10-09 DATE PLOTTED => 04-FEB-2010 TIME PLOTTED => 10:53

Dist	COUNTY	ROUTE	POST MILES TOTAL PROJECT	SHEET No.	TOTAL SHEETS
12	Ora	22,405, 605	R0.3/R0.9, 22.3/24.0,3.0/R1.6	1131	1929

REGISTERED CIVIL ENGINEER — DATE 8/10/09

2-1-10
PLANS APPROVAL DATE

REGISTERED PROFESSIONAL ENGINEER ROSS E. LEW No. C53399 Exp. 6/30/11 CIVIL STATE OF CALIFORNIA

THE STATE OF CALIFORNIA OR ITS OFFICERS OR AGENTS SHALL NOT BE RESPONSIBLE FOR THE ACCURACY OR COMPLETENESS OF ELECTRONIC COPIES OF THIS PLAN SHEET.

TRC
21 TECHNOLOGY Dr
IRVINE, CA 92618

ORANGE COUNTY
TRANSPORTATION AUTHORITY
550 S. MAIN STREET
ORANGE, CA 92863-1584

NOTES:

1. FOR COMPLETE RIGHT OF WAY AND ACCURATE ACCESS DATA, SEE RIGHT OF WAY RECORD MAPS AT DISTRICT OFFICE.
2. SEE STANDARD PLAN A85 FOR CHAIN LINK GATE. GATE WIDTH IS MEASURED CENTER TO CENTER OF GATE POSTS.
3. PROVIDE 6" MINIMUM COVER OVER PG.

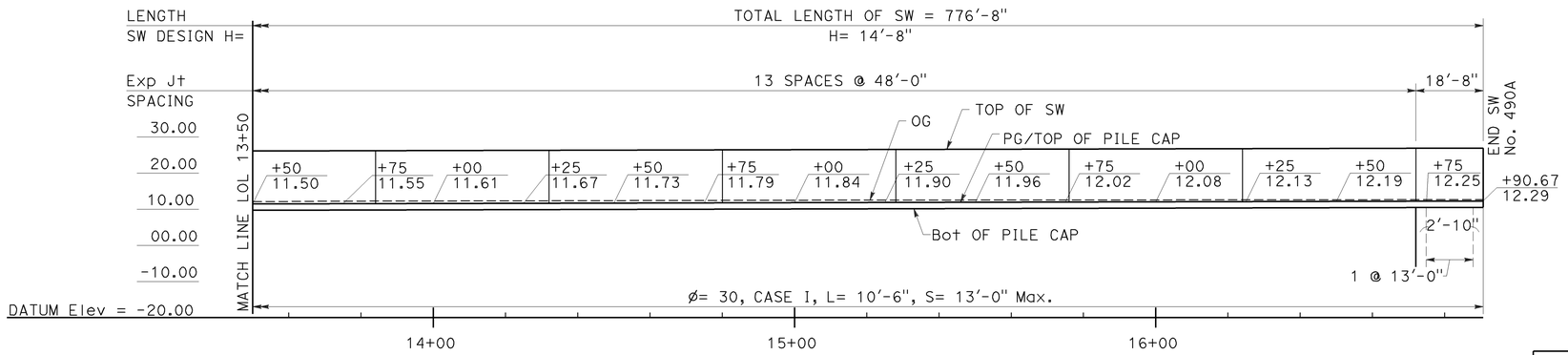

ELEVATION
SCALE: Horiz 1" = 20'
Vert 1" = 20'

CURVE DATA				
No.	R	Δ	T	L
24	1,500.00'	15°10'36"	199.83'	397.33'

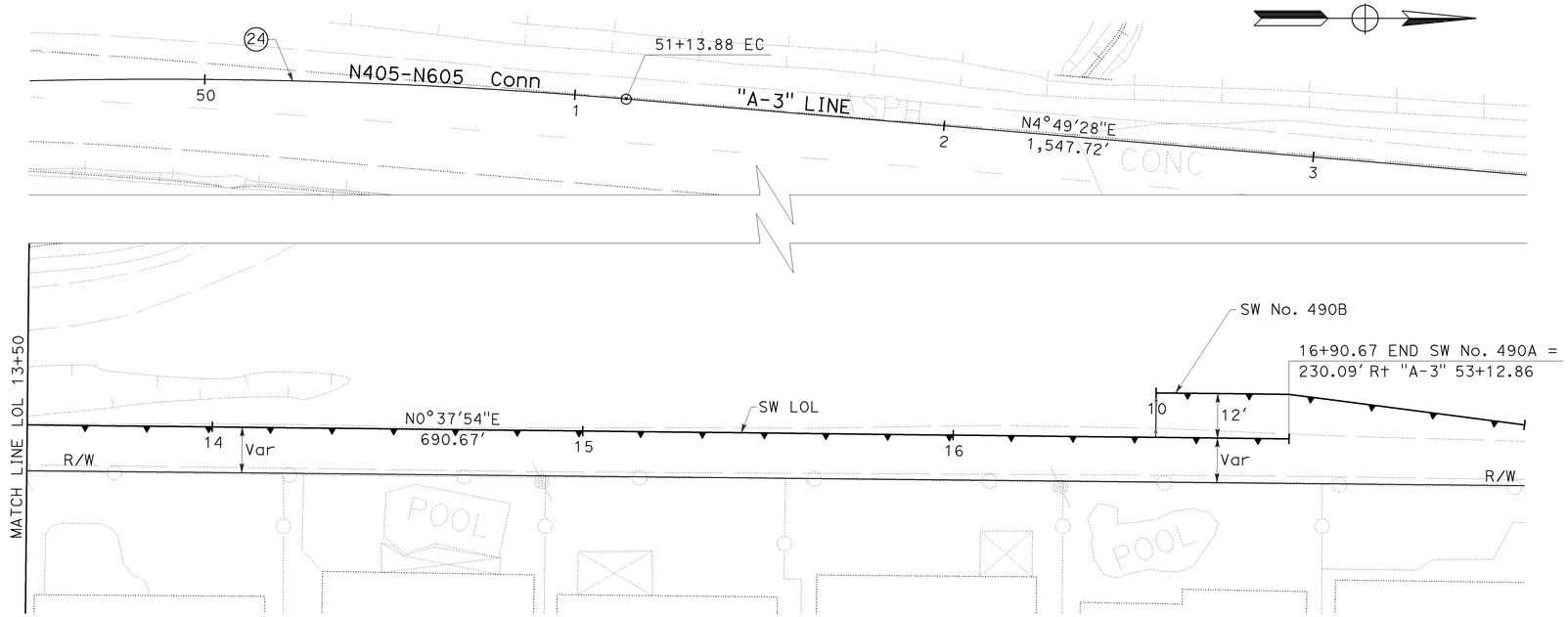

PLAN
SCALE: 1" = 20'

THIS PLAN ACCURATE FOR SOUND WALL WORK ONLY.

SOUND WALL PLAN
SW No. 490A

SCALE AS SHOWN

SW-18

REVISED BY	DATE REVISED
DBL	8/10/09

JASON YAW — ROSS LEW — CALCULATED-DESIGNED BY — CHECKED BY

ROSS LEW — CONSULTANT FUNCTIONAL SUPERVISOR

STATE OF CALIFORNIA - DEPARTMENT OF TRANSPORTATION — Caltrans

LAST REVISION 08-10-09 | DATE PLOTTED => 04-FEB-2010 | TIME PLOTTED => 10:53

Dist	COUNTY	ROUTE	POST MILES TOTAL PROJECT	SHEET No.	TOTAL SHEETS
12	Ora	22,405, 605	R0.3/R0.9, 22.3/24.0,3.0/R1.6	1132	1929

REGISTERED CIVIL ENGINEER 8/10/09 DATE

2-1-10
PLANS APPROVAL DATE

REGISTERED PROFESSIONAL ENGINEER ROSS E. LEW No. C53399 Exp. 6/30/11 CIVIL STATE OF CALIFORNIA

THE STATE OF CALIFORNIA OR ITS OFFICERS OR AGENTS SHALL NOT BE RESPONSIBLE FOR THE ACCURACY OR COMPLETENESS OF ELECTRONIC COPIES OF THIS PLAN SHEET.

TRC
21 TECHNOLOGY Dr
IRVINE, CA 92618

ORANGE COUNTY
TRANSPORTATION AUTHORITY
550 S. MAIN STREET
ORANGE, CA 92863-1584

NOTES:

1. FOR COMPLETE RIGHT OF WAY AND ACCURATE ACCESS DATA, SEE RIGHT OF WAY RECORD MAPS AT DISTRICT OFFICE.
2. SEE STANDARD PLAN A85 FOR CHAIN LINK GATE. GATE WIDTH IS MEASURED CENTER TO CENTER OF GATE POSTS.
3. PROVIDE 6" MINIMUM COVER OVER PG.

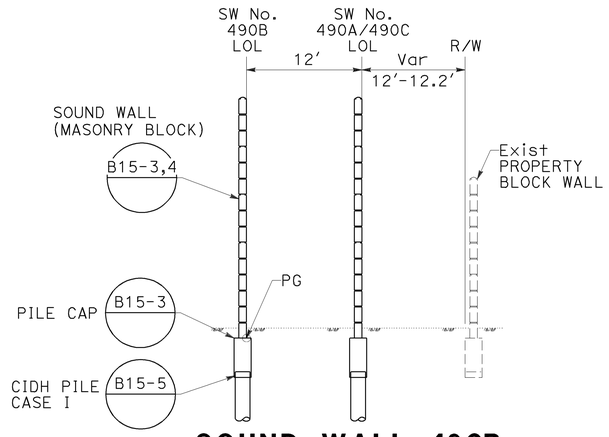

SOUND WALL 490B
Sta 10+00 TO Sta 10+36
Sta 17+73.79 TO Sta 18+10

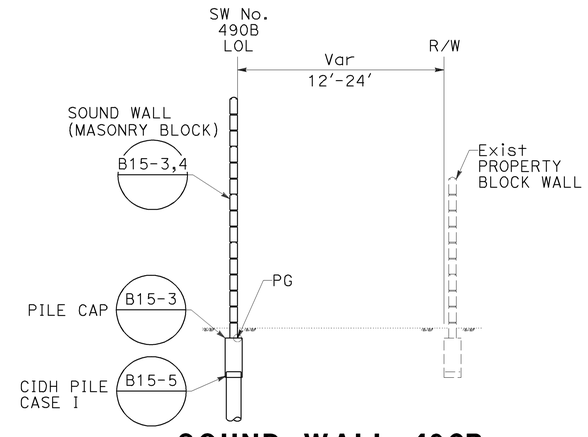

SOUND WALL 490B
Sta 10+36 TO Sta 17+73.79

LEGEND

B15-X / X-X — STANDARD PLAN SHEET No. / DETAIL No.

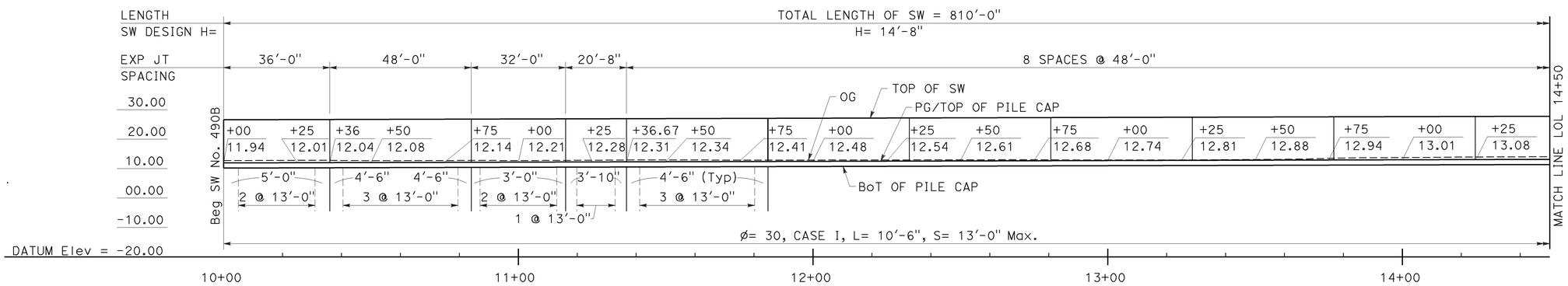

ELEVATION
SCALE: Horiz 1" = 20'
Vert 1" = 20'

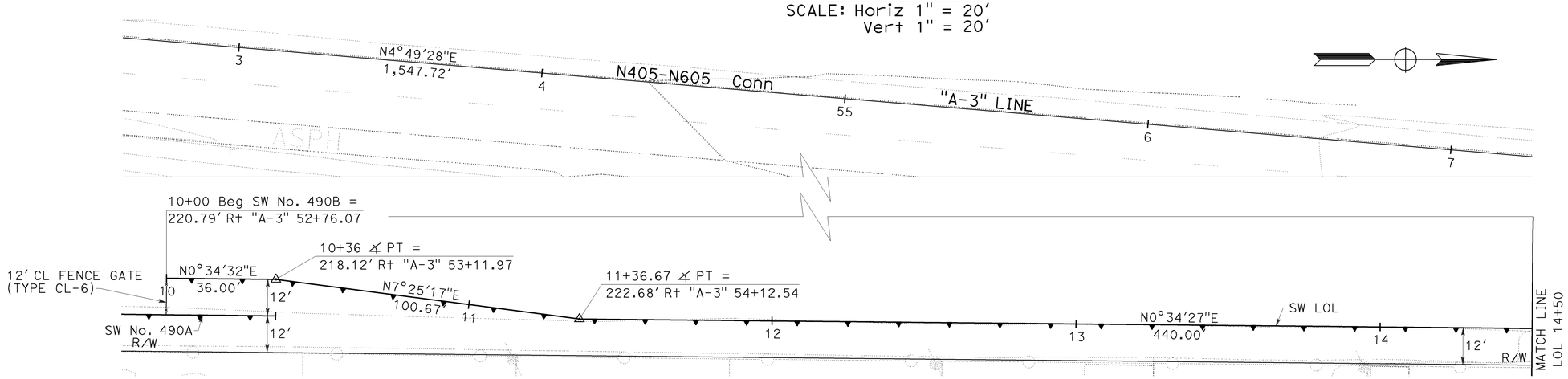

PLAN
SCALE: 1" = 20'

SOUND WALL PLAN
SW No. 490B

SCALE AS SHOWN

SW-19

THIS PLAN ACCURATE FOR SOUND WALL WORK ONLY.

DBL	8/10/09
REVISED BY	DATE REVISED
JASON YAW	ROSS LEW
CALCULATED-DESIGNED BY	CHECKED BY
ROSS LEW	
CONSULTANT FUNCTIONAL SUPERVISOR	

STATE OF CALIFORNIA - DEPARTMENT OF TRANSPORTATION
Caltrans

LAST REVISION 08-10-09 DATE PLOTTED => 04-FEB-2010 TIME PLOTTED => 10:53

Dist	COUNTY	ROUTE	POST MILES TOTAL PROJECT	SHEET No.	TOTAL SHEETS
12	Ora	22,405, 605	R0.3/R0.9, 22.3/24.0,3.0/R1.6	1133	1929

REGISTERED CIVIL ENGINEER 8/10/09 DATE

2-1-10
PLANS APPROVAL DATE

REGISTERED PROFESSIONAL ENGINEER ROSS E. LEW No. C53399 Exp. 6/30/11 CIVIL STATE OF CALIFORNIA

THE STATE OF CALIFORNIA OR ITS OFFICERS OR AGENTS SHALL NOT BE RESPONSIBLE FOR THE ACCURACY OR COMPLETENESS OF ELECTRONIC COPIES OF THIS PLAN SHEET.

TRC
21 TECHNOLOGY Dr
IRVINE, CA 92618

ORANGE COUNTY
TRANSPORTATION AUTHORITY
550 S. MAIN STREET
ORANGE, CA 92863-1584

NOTES:

1. FOR COMPLETE RIGHT OF WAY AND ACCURATE ACCESS DATA, SEE RIGHT OF WAY RECORD MAPS AT DISTRICT OFFICE.
2. SEE STANDARD PLAN A85 FOR CHAIN LINK GATE. GATE WIDTH IS MEASURED CENTER TO CENTER OF GATE POSTS.
3. PROVIDE 6" MINIMUM COVER OVER PG.

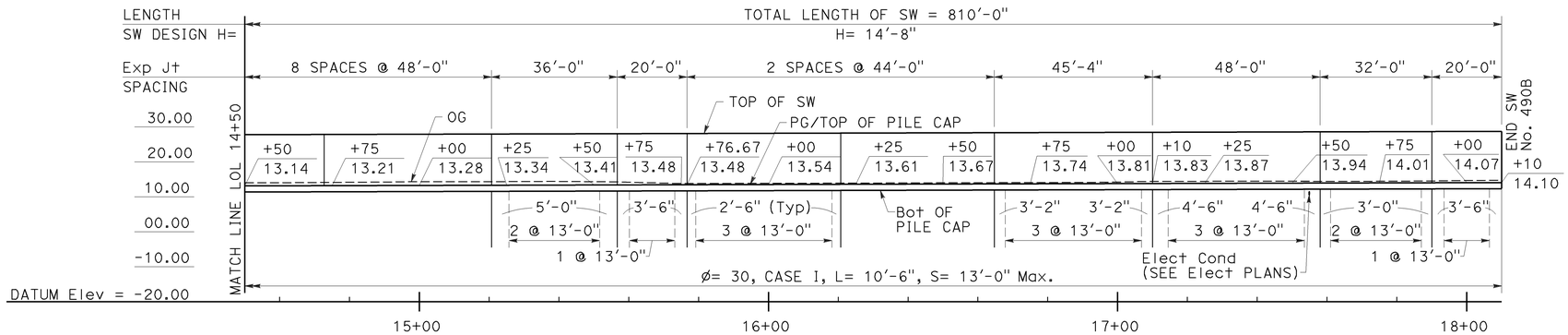

ELEVATION
SCALE: Horiz 1" = 20'
Vert 1" = 20'

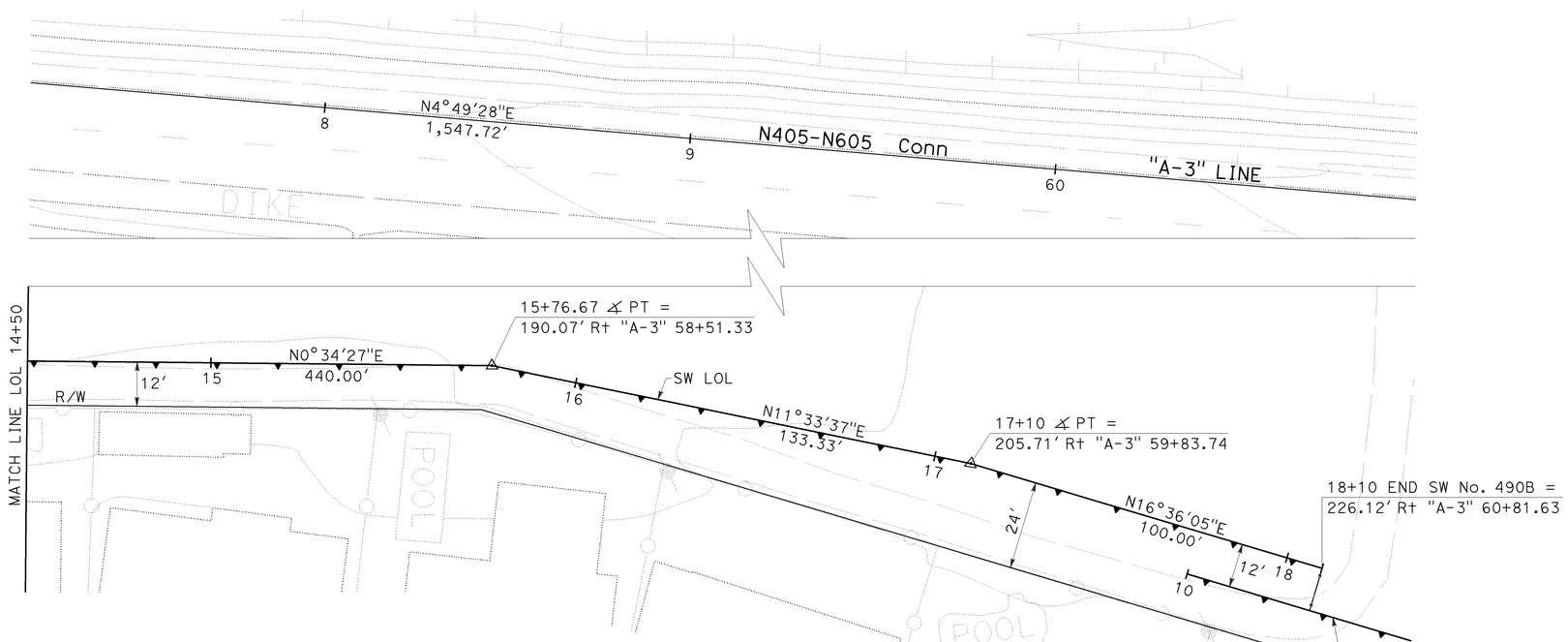

PLAN
SCALE: 1" = 20'

SOUND WALL PLAN
SW No. 490B

SCALE AS SHOWN

SW-20

THIS PLAN ACCURATE FOR SOUND WALL WORK ONLY.

DBL	8/10/09
REVISED BY	DATE REVISED
JASON YAW	ROSS LEW
CALCULATED-DESIGNED BY	CHECKED BY
CONSULTANT FUNCTIONAL SUPERVISOR	ROSS LEW

STATE OF CALIFORNIA - DEPARTMENT OF TRANSPORTATION
Caltrans

LAST REVISION 08-10-09 DATE PLOTTED => 04-FEB-2010 TIME PLOTTED => 10:54

Dist	COUNTY	ROUTE	POST MILES TOTAL PROJECT	SHEET No.	TOTAL SHEETS
12	Ora	22,405, 605	R0.3/R0.9, 22.3/24.0,3.0/R1.6	1134	1929

REGISTERED CIVIL ENGINEER 8/10/09 DATE

2-1-10
PLANS APPROVAL DATE

REGISTERED PROFESSIONAL ENGINEER ROSS E. LEW No. C53399 Exp. 6/30/11 CIVIL STATE OF CALIFORNIA

THE STATE OF CALIFORNIA OR ITS OFFICERS OR AGENTS SHALL NOT BE RESPONSIBLE FOR THE ACCURACY OR COMPLETENESS OF ELECTRONIC COPIES OF THIS PLAN SHEET.

TRC
21 TECHNOLOGY Dr
IRVINE, CA 92618

ORANGE COUNTY
TRANSPORTATION AUTHORITY
550 S. MAIN STREET
ORANGE, CA 92863-1584

NOTES:

1. FOR COMPLETE RIGHT OF WAY AND ACCURATE ACCESS DATA, SEE RIGHT OF WAY RECORD MAPS AT DISTRICT OFFICE.
2. SEE STANDARD PLAN A85 FOR CHAIN LINK GATE. GATE WIDTH IS MEASURED CENTER TO CENTER OF GATE POSTS.
3. PROVIDE 6" MINIMUM COVER OVER PG.

LEGEND

B15-X — STANDARD PLAN SHEET No.
X-X — DETAIL No.

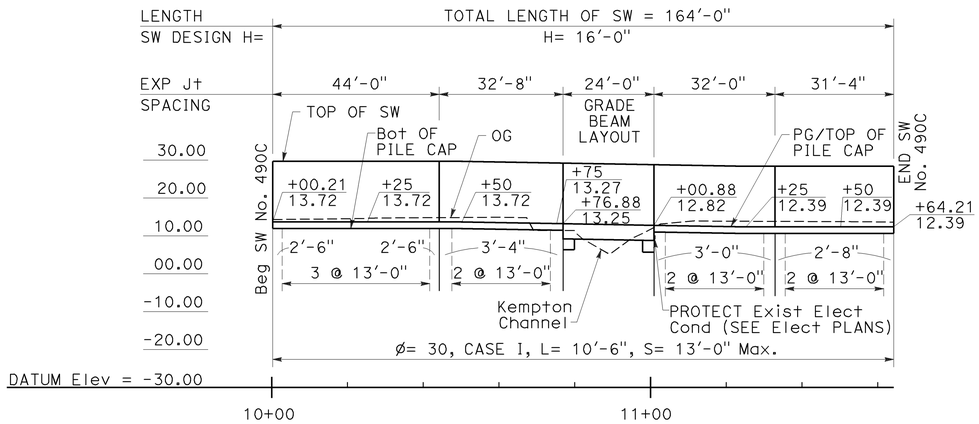

ELEVATION
SCALE: Horiz 1" = 20'
Vert 1" = 20'

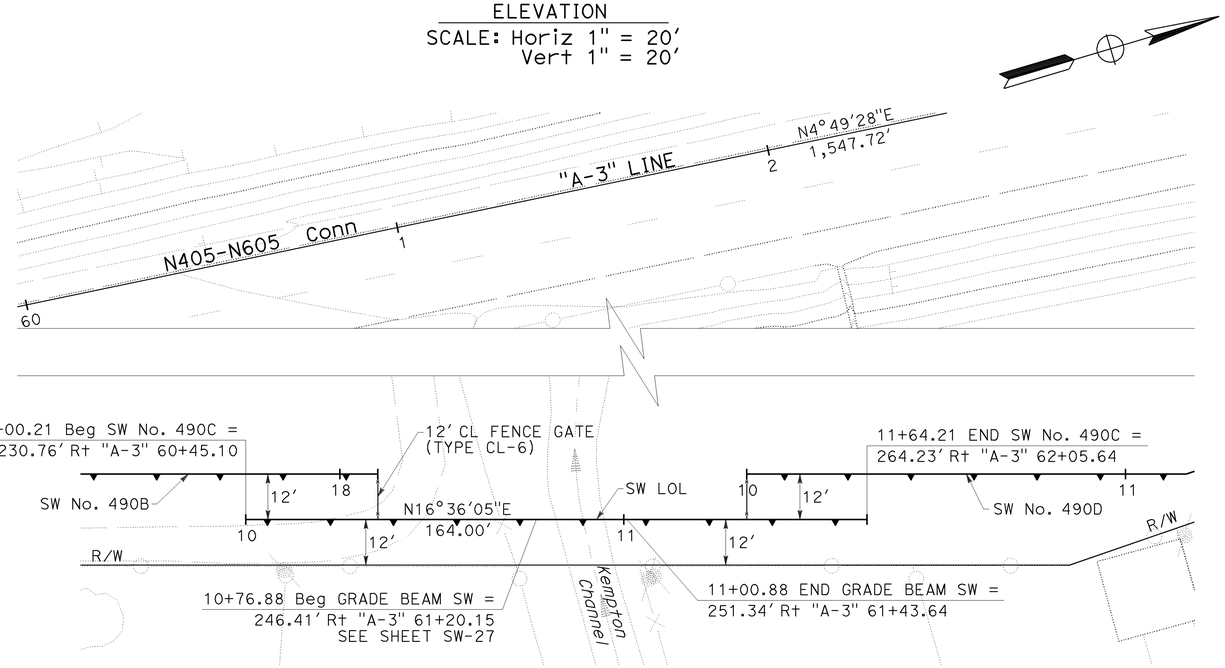

PLAN
SCALE: 1" = 20'

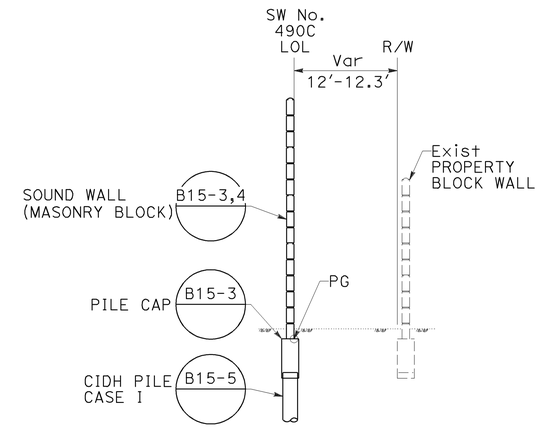

SOUND WALL 490C

Sta 10+35.03 TO Sta 11+32.46
SEE SW-27 TO SW-28 FOR
Sta 10+76.88 TO Sta 11+00.88
NO SCALE

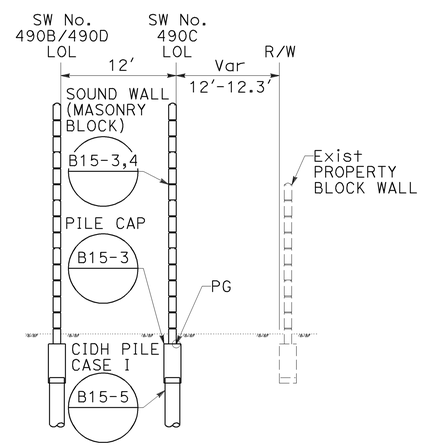

SOUND WALL 490C

Sta 10+00.21 TO Sta 10+35.03
Sta 11+32.46 TO Sta 11+64.21
NO SCALE

SOUND WALL PLAN
SW No. 490C

SCALE AS SHOWN

SW-21

THIS PLAN ACCURATE FOR SOUND WALL WORK ONLY.

STATE OF CALIFORNIA - DEPARTMENT OF TRANSPORTATION
Caltrans
CONSULTANT FUNCTIONAL SUPERVISOR: ROSS LEW
CALCULATED-DESIGNED BY: JASON YAW
CHECKED BY: ROSS LEW
REVISED BY: DBL
DATE REVISED: 8/10/09

LAST REVISION DATE PLOTTED => 04-FEB-2010
TIME PLOTTED => 10:54
08-10-09

Dist	COUNTY	ROUTE	POST MILES TOTAL PROJECT	SHEET No.	TOTAL SHEETS
12	Ora	22,405, 605	R0.3/R0.9, 22.3/24.0,3.0/R1.6	1135	1929

REGISTERED CIVIL ENGINEER 8/10/09 DATE

2-1-10
PLANS APPROVAL DATE

REGISTERED PROFESSIONAL ENGINEER ROSS E. LEW No. C53399 Exp. 6/30/11 CIVIL STATE OF CALIFORNIA

THE STATE OF CALIFORNIA OR ITS OFFICERS OR AGENTS SHALL NOT BE RESPONSIBLE FOR THE ACCURACY OR COMPLETENESS OF ELECTRONIC COPIES OF THIS PLAN SHEET.

TRC
21 TECHNOLOGY Dr
IRVINE, CA 92618

ORANGE COUNTY
TRANSPORTATION AUTHORITY
550 S. MAIN STREET
ORANGE, CA 92863-1584

NOTES:

1. FOR COMPLETE RIGHT OF WAY AND ACCURATE ACCESS DATA, SEE RIGHT OF WAY RECORD MAPS AT DISTRICT OFFICE.
2. SEE STANDARD PLAN A85 FOR CHAIN LINK GATE. GATE WIDTH IS MEASURED CENTER TO CENTER OF GATE POSTS.
3. PROVIDE 6" MINIMUM COVER OVER PG.

LEGEND

B15-X — STANDARD PLAN SHEET No.
X-X — DETAIL No.

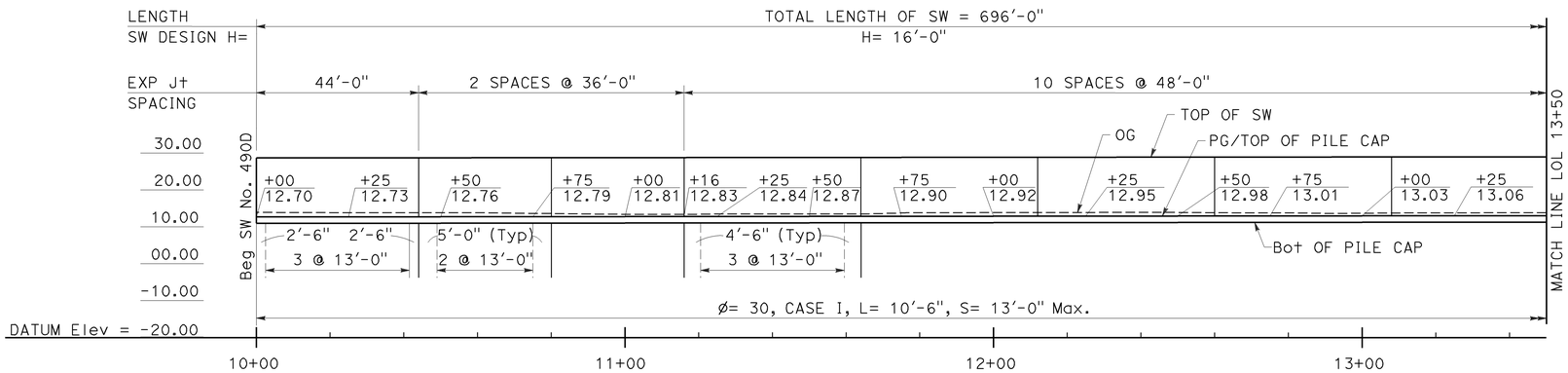

ELEVATION
SCALE: Horiz 1" = 20'
Vert 1" = 20'

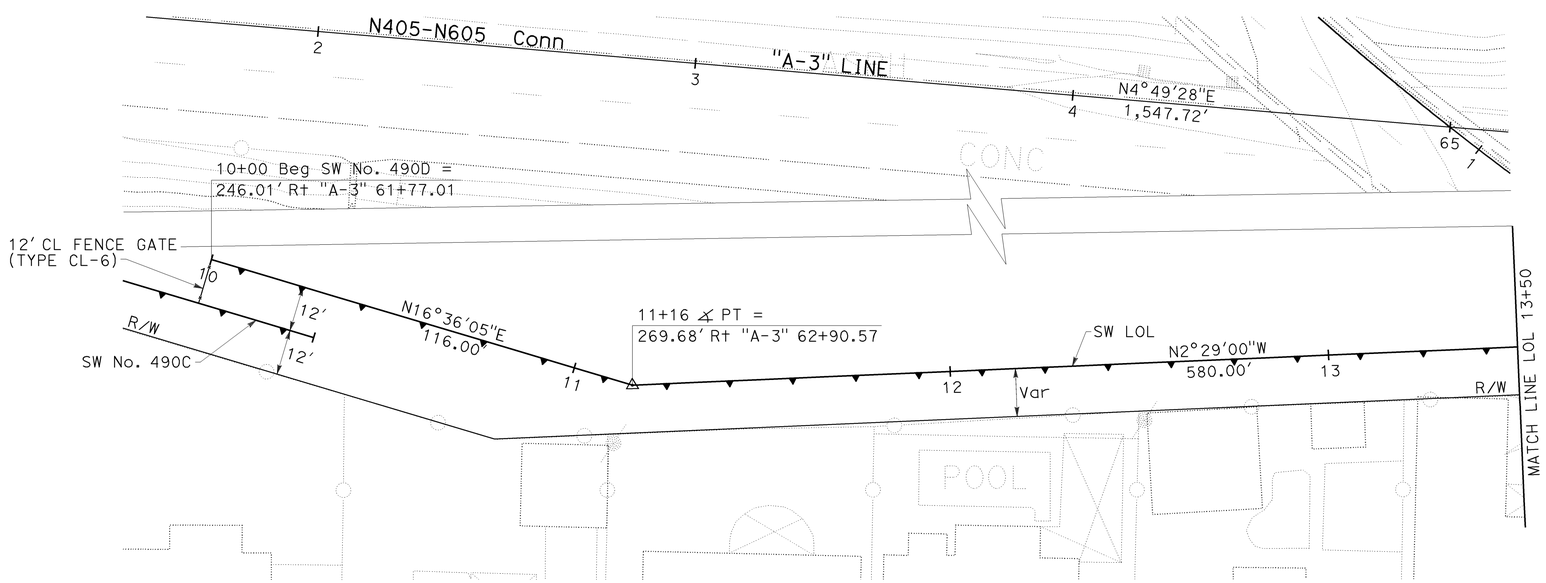

PLAN
SCALE: 1" = 20'

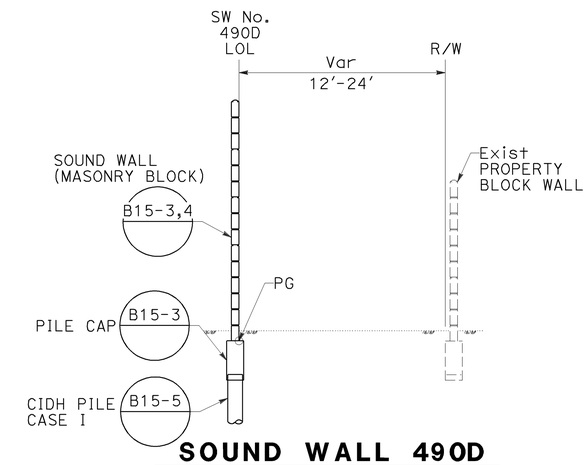

SOUND WALL 490D
Sta 10+31.75 TO Sta 16+96
NO SCALE

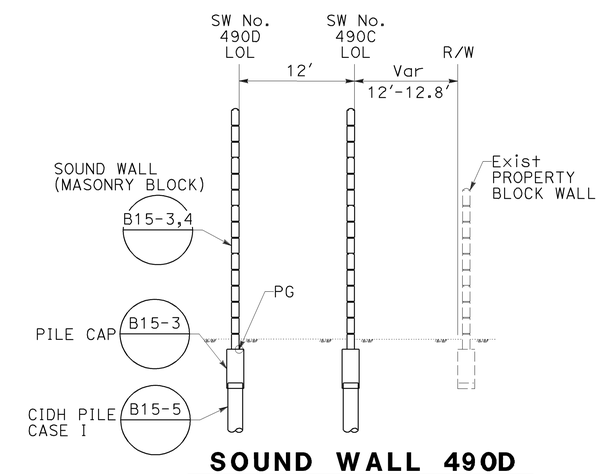

SOUND WALL 490D
Sta 10+00 TO Sta 10+31.75
NO SCALE

SOUND WALL PLAN
SW No. 490D

SCALE AS SHOWN

SW-22

THIS PLAN ACCURATE FOR SOUND WALL WORK ONLY.

REVISED BY	DATE REVISED
DBL	8/10/09

CALCULATED-DESIGNED BY: JASON YAW
CHECKED BY: ROSS LEW
CONSULTANT FUNCTIONAL SUPERVISOR: ROSS LEW

STATE OF CALIFORNIA - DEPARTMENT OF TRANSPORTATION
Caltrans

LAST REVISION 08-10-09 | DATE PLOTTED => 04-FEB-2010 | TIME PLOTTED => 10:54

Dist	COUNTY	ROUTE	POST MILES TOTAL PROJECT	SHEET No.	TOTAL SHEETS
12	Ora	22,405, 605	R0.3/R0.9, 22.3/24.0,3.0/R1.6	1136	1929

REGISTERED CIVIL ENGINEER — DATE 8/10/09

2-1-10
PLANS APPROVAL DATE

REGISTERED PROFESSIONAL ENGINEER — ROSS E. LEW No. C53399 Exp. 6/30/11 CIVIL — STATE OF CALIFORNIA

THE STATE OF CALIFORNIA OR ITS OFFICERS OR AGENTS SHALL NOT BE RESPONSIBLE FOR THE ACCURACY OR COMPLETENESS OF ELECTRONIC COPIES OF THIS PLAN SHEET.

TRC
21 TECHNOLOGY Dr
IRVINE, CA 92618

ORANGE COUNTY
TRANSPORTATION AUTHORITY
550 S. MAIN STREET
ORANGE, CA 92863-1584

NOTES:

1. FOR COMPLETE RIGHT OF WAY AND ACCURATE ACCESS DATA, SEE RIGHT OF WAY RECORD MAPS AT DISTRICT OFFICE.
2. SEE STANDARD PLAN A85 FOR CHAIN LINK GATE. GATE WIDTH IS MEASURED CENTER TO CENTER OF GATE POSTS.
3. PROVIDE 6" MINIMUM COVER OVER PG.

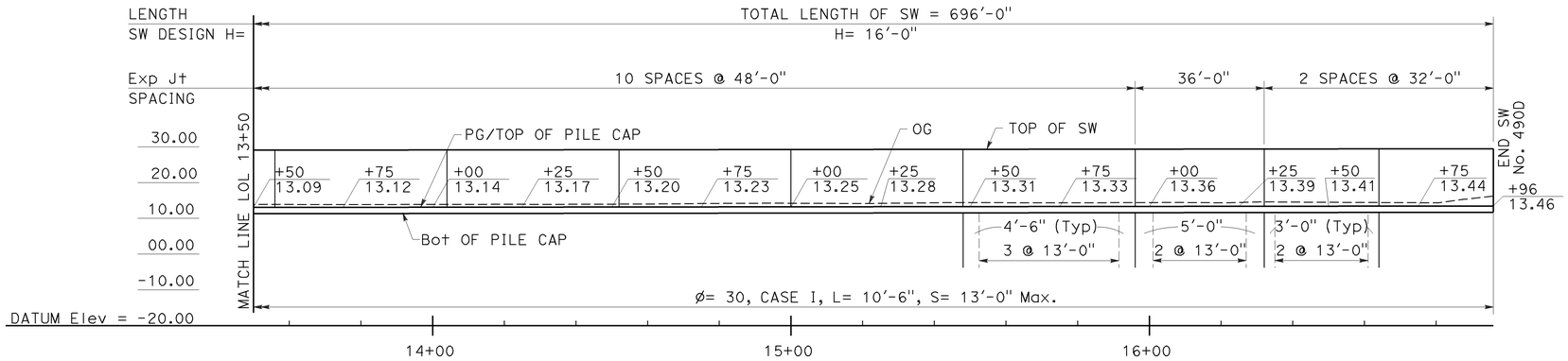

ELEVATION
SCALE: Horiz 1" = 20'
Vert 1" = 20'

CURVE DATA				
No.	R	Δ	T	L
27	826.00'	128°19'16"	1,705.67'	1,849.93'

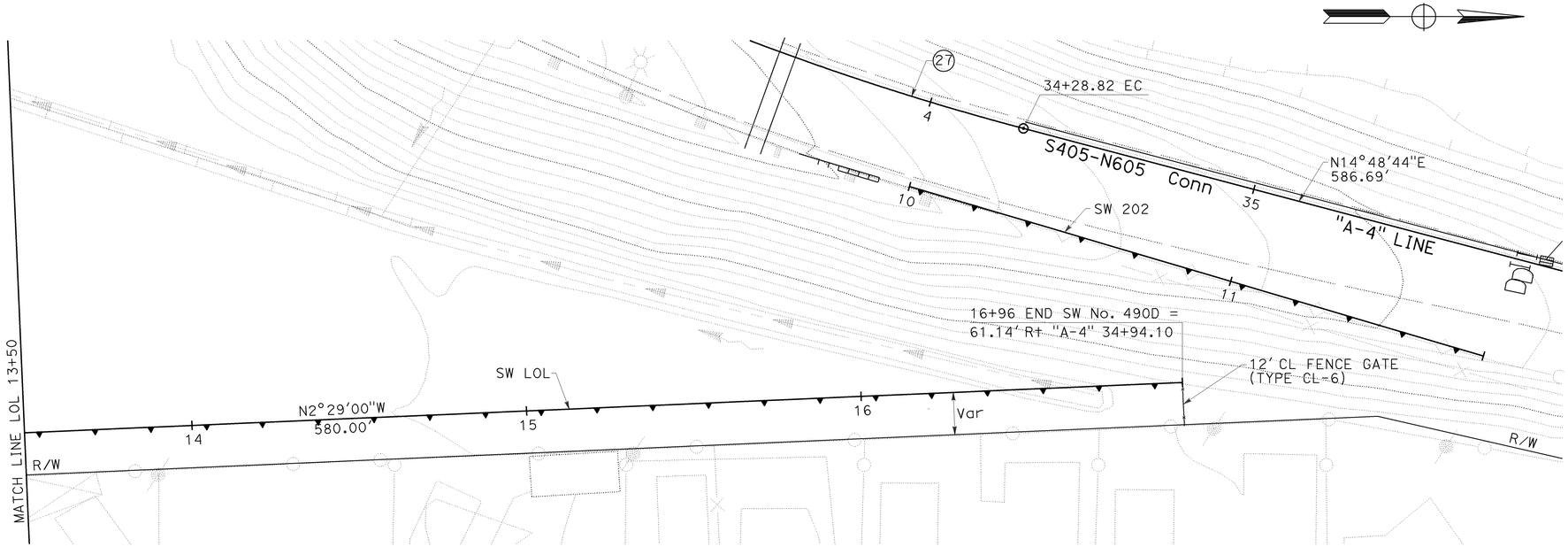

PLAN
SCALE: 1" = 20'

SOUND WALL PLAN
SW No. 490D

SCALE AS SHOWN

SW-23

THIS PLAN ACCURATE FOR SOUND WALL WORK ONLY.

STATE OF CALIFORNIA - DEPARTMENT OF TRANSPORTATION
Caltrans

CONSULTANT FUNCTIONAL SUPERVISOR: ROSS LEW
CALCULATED-DESIGNED BY: JASON YAW
CHECKED BY: ROSS LEW
REVISED BY: DBL
DATE REVISED: 8/10/09

LAST REVISION: 08-10-09
DATE PLOTTED => 04-FEB-2010
TIME PLOTTED => 08:47

Dist	COUNTY	ROUTE	POST MILES TOTAL PROJECT	SHEET No.	TOTAL SHEETS
12	Ora	22,405, 605	R0.3/R0.9, 22.3/24.0,3.0/R1.6	1137	1929

REGISTERED CIVIL ENGINEER 08/10/09 DATE

2-1-10
PLANS APPROVAL DATE

REGISTERED PROFESSIONAL ENGINEER ANDREW V. KORKOS No. GE 2357 Exp. 03/31/10 GEOTECHNICAL STATE OF CALIFORNIA

THE STATE OF CALIFORNIA OR ITS OFFICERS OR AGENTS SHALL NOT BE RESPONSIBLE FOR THE ACCURACY OR COMPLETENESS OF ELECTRONIC COPIES OF THIS PLAN SHEET.

EARTH MECHANICS, INC.
17660 NEWHOPE ST. SUITE E
FOUNTAIN VALLEY, CA 92708

OCTA
550 S. MAIN STREET
ORANGE, CA 92863-1584

BENCHMARKS:

Monument: 1A-144-04

Described by OCS 2005 - Found 3.75" OCS aluminum benchmark disk stamped "1A-144-04", set in the southwesterly corner of a 4.4 ft by 4.4 ft concrete catch basin. Monument is located in the northeasterly corner of the intersection of Seal Beach Boulevard and St. Cloud Drive, 44 ft easterly of the centerline of Seal Beach Boulevard and 58 ft northerly of the centerline of St. Cloud Dr. Monument is set level with the sidewalk.

Elevation: 15.37 feet

NOTES:

(1) This LOTB sheet (Boring Record) was prepared in accordance with the Caltrans Soil and Rock Classification Logging, Classification and Presentation Manual (June 2007).

(2) 2.4" samples were taken using a California Modified Sampler.

(3) An automatic trip hammer system consisting of a hammer weight of 140 lbs falling a distance of 30" was used to advance the drive sampler.

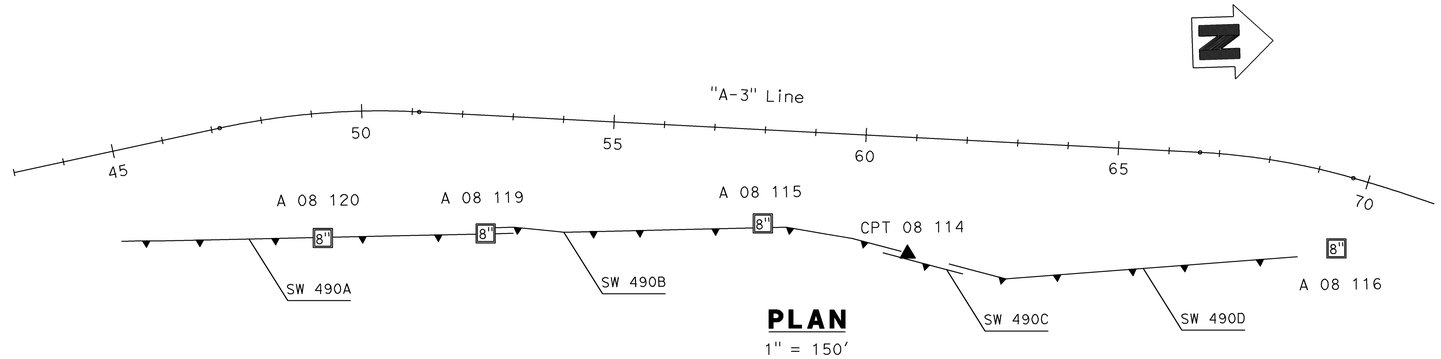

PLAN
1" = 150'

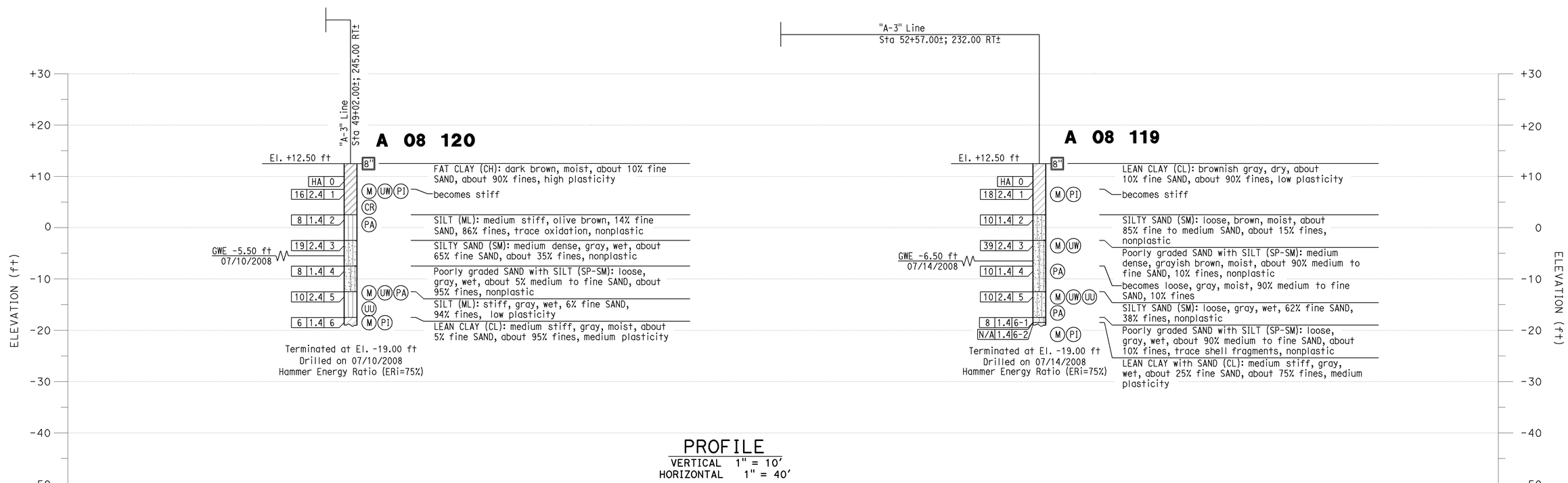

PROFILE
VERTICAL 1" = 10'
HORIZONTAL 1" = 40'

LOG OF TEST BORINGS NO. 1
SW No. 490
SCALE AS SHOWN

SW-24

REVISED BY	DATE REVISED
K.P	08/10/09

CALCULATED-DESIGNED BY: J.FANG
CHECKED BY: G.J.GUNARANJAN
CONSULTANT FUNCTIONAL SUPERVISOR: K.ARULMOLI

STATE OF CALIFORNIA - DEPARTMENT OF TRANSPORTATION
Caltrans

LAST REVISION 08-10-09 DATE PLOTTED => 04-FEB-2010 TIME PLOTTED => 08:47

Dist	COUNTY	ROUTE	POST MILES TOTAL PROJECT	SHEET No.	TOTAL SHEETS
12	Ora	22,405, 605	R0.3/R0.9, 22.3/24.0,3.0/R1.6	1138	1929

REGISTERED CIVIL ENGINEER — DATE 08/10/09

2-1-10
PLANS APPROVAL DATE

REGISTERED PROFESSIONAL ENGINEER — ANDREW V. KORKOS — No. GE 2357 — Exp. 03/31/10 — GEOTECHNICAL — STATE OF CALIFORNIA

THE STATE OF CALIFORNIA OR ITS OFFICERS OR AGENTS SHALL NOT BE RESPONSIBLE FOR THE ACCURACY OR COMPLETENESS OF ELECTRONIC COPIES OF THIS PLAN SHEET.

EARTH MECHANICS, INC.
17660 NEWHOPE ST. SUITE E
FOUNTAIN VALLEY, CA 92708

OCTA
550 S. MAIN STREET
ORANGE, CA 92863-1584

BENCHMARKS:

Monument: 1A-144-04

Described by OCS 2005 - Found 3.75" OCS aluminum benchmark disk stamped "1A-144-04", set in the southwesterly corner of a 4.4 ft by 4.4 ft concrete catch basin. Monument is located in the northeasterly corner of the intersection of Seal Beach Boulevard and St. Cloud Drive, 44 ft easterly of the centerline of Seal Beach Boulevard and 58 ft northerly of the centerline of St. Cloud Dr. Monument is set level with the sidewalk.

Elevation: 15.37 feet

NOTES:

(1) This LOTB sheet (Boring Record) was prepared in accordance with the Caltrans Soil and Rock Classification Logging, Classification and Presentation Manual (June 2007).

(2) 2.4" samples were taken using a California Modified Sampler.

(3) An automatic trip hammer system consisting of a hammer weight of 140 lbs falling a distance of 30" was used to advance the drive sampler.

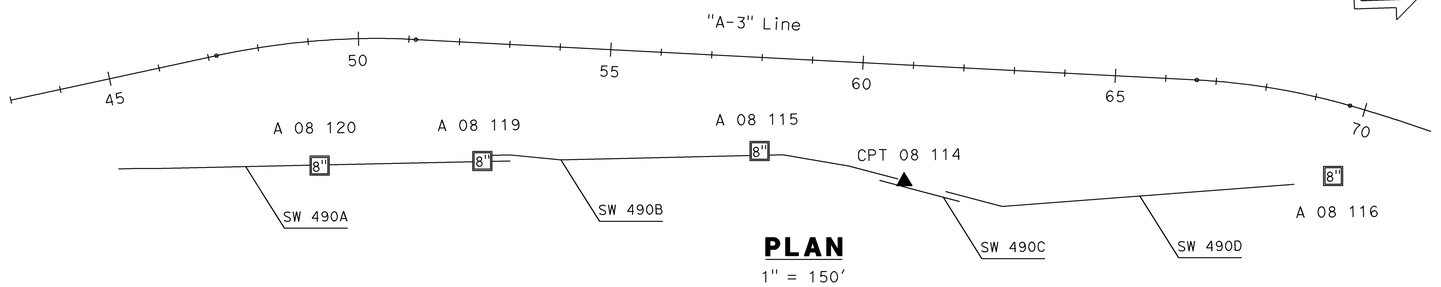

PLAN
1" = 150'

PROFILE
VERTICAL 1" = 10'
HORIZONTAL 1" = 40'

LOG OF TEST BORINGS NO. 2
SW No. 490
SCALE AS SHOWN

SW-25

REVISED BY	DATE REVISED
K.P	08/10/09

J.FANG — CALCULATED-DESIGNED BY
G.J.GUNARANJAN — CHECKED BY
K.ARULMOLI — CONSULTANT FUNCTIONAL SUPERVISOR

STATE OF CALIFORNIA - DEPARTMENT OF TRANSPORTATION
Caltrans

LAST REVISION 08-10-09 | DATE PLOTTED => 04-FEB-2010 | TIME PLOTTED => 08:47

Dist	COUNTY	ROUTE	POST MILES TOTAL PROJECT	SHEET No.	TOTAL SHEETS
12	Ora	22,405, 605	R0.3/R0.9, 22.3/24.0,3.0/R1.6	1139	1929

REGISTERED CIVIL ENGINEER — DATE 08/10/09

2-1-10
PLANS APPROVAL DATE

REGISTERED PROFESSIONAL ENGINEER — ANDREW V. KORKOS — No. GE 2357 — Exp. 03/31/10 — GEOTECHNICAL — STATE OF CALIFORNIA

THE STATE OF CALIFORNIA OR ITS OFFICERS OR AGENTS SHALL NOT BE RESPONSIBLE FOR THE ACCURACY OR COMPLETENESS OF ELECTRONIC COPIES OF THIS PLAN SHEET.

EARTH MECHANICS, INC.
17660 NEWHOPE ST. SUITE E
FOUNTAIN VALLEY, CA 92708

OCTA
550 S. MAIN STREET
ORANGE, CA 92863-1584

BENCHMARKS:

Monument: 1A-144-04

Described by OCS 2005 - Found 3.75" OCS aluminum benchmark disk stamped "1A-144-04", set in the southwesterly corner of a 4.4 ft by 4.4 ft concrete catch basin. Monument is located in the northeasterly corner of the intersection of Seal Beach Boulevard and St. Cloud Drive, 44 ft easterly of the centerline of Seal Beach Boulevard and 58 ft northerly of the centerline of St. Cloud Dr. Monument is set level with the sidewalk.

Elevation: 15.37 feet

NOTES:

(1) This LOTB sheet (Boring Record) was prepared in accordance with the Caltrans Soil and Rock Classification Logging, Classification and Presentation Manual (June 2007).

(2) 2.4" samples were taken using a California Modified Sampler.

(3) An automatic trip hammer system consisting of a hammer weight of 140 lbs falling a distance of 30" was used to advance the drive sampler.

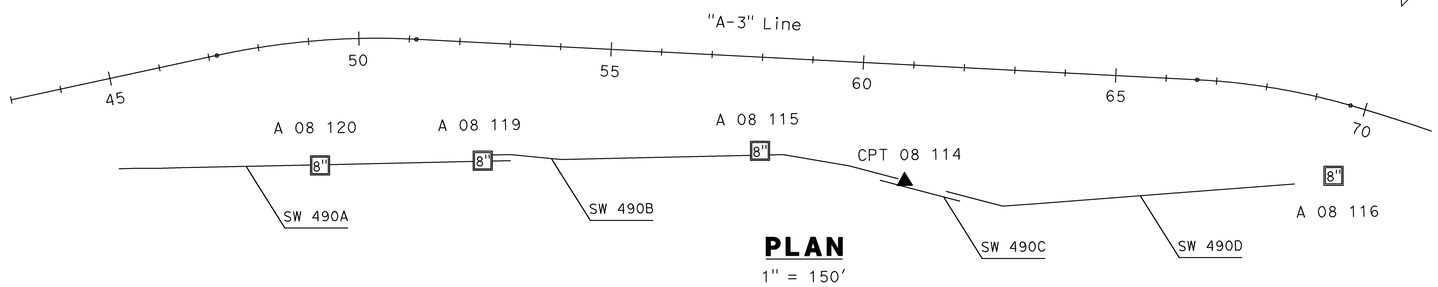

PLAN
1" = 150'

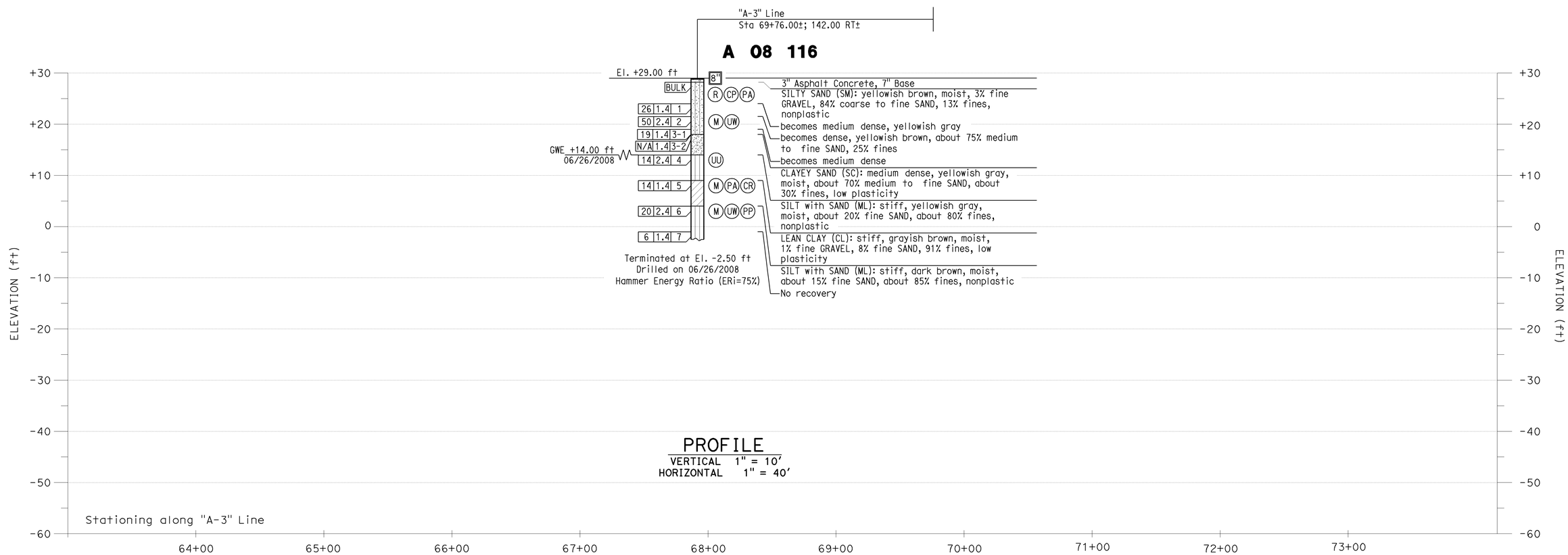

PROFILE
VERTICAL 1" = 10'
HORIZONTAL 1" = 40'

LOG OF TEST BORINGS NO. 3
SW No. 490
SCALE AS SHOWN

SW-26

J.FANG	K.P
G.J.GUNARANJAN	08/10/09
CALCULATED-DESIGNED BY	REVISED BY
CHECKED BY	DATE REVISED

CONSULTANT FUNCTIONAL SUPERVISOR: K.ARULMOLI

STATE OF CALIFORNIA - DEPARTMENT OF TRANSPORTATION

Caltrans

LAST REVISION 08-10-09 | DATE PLOTTED => 04-FEB-2010 | TIME PLOTTED => 08:48

DIST	COUNTY	ROUTE	POST MILES TOTAL PROJECT	SHEET No	TOTAL SHEETS
12	Ora	22,405, 605	R0.3/R0.9, 22.3/24.0,3.0/R1.6	1140	1929

REGISTERED CIVIL ENGINEER — DATE 7/27/09

2-1-10
PLANS APPROVAL DATE

REGISTERED PROFESSIONAL ENGINEER — VINH TRINH — No. C 50685 — Exp. 9-30-09 — CIVIL — STATE OF CALIFORNIA

The State of California or its officers or agents shall not be responsible for the accuracy or completeness of electronic copies of this plan sheet.

OCTA
550 SOUTH MAIN STREET
ORANGE, CA 92863

WKE, INC.
400 N. TUSTIN AVE, SUITE 285
SANTA ANA, CA 92705

INDEX TO PLANS

1. Grade Beam Layout
2. Grade Beam Details

DESIGN NOTES:

DESIGN
Uniform Building Code, 1997 Edition
and the Bridge Design Specifications.

DESIGN WIND LOAD
27 psf

DESIGN SEISMIC LOAD
0.57 Dead load

REINFORCED CONCRETE
f'c = 3.6 ksi
fy = 60 ksi

CONCRETE MASONRY

REGULAR STRENGTH	HIGH STRENGTH	
f'm = 1500 psi	f'm = 2000 psi	f'm = 2500 psi
fb = 495 psi	fb = 660 psi	fb = 830 psi
fs = 24,000 psi	fs = 24,000 psi	fs = 24,000 psi
n = 25.8	n = 19.3	n = 15.5

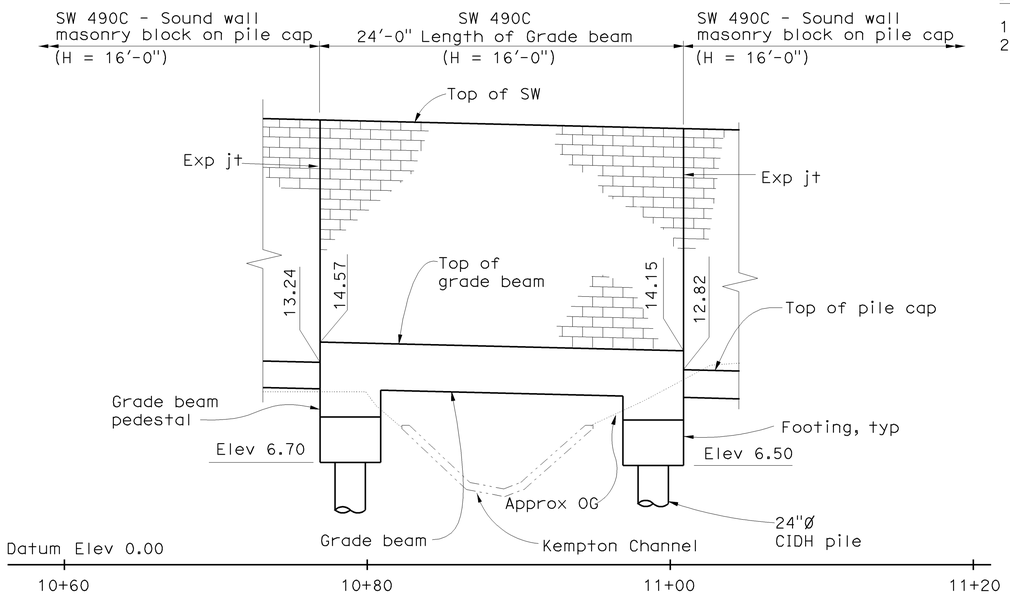

ELEVATION
1" = 5'

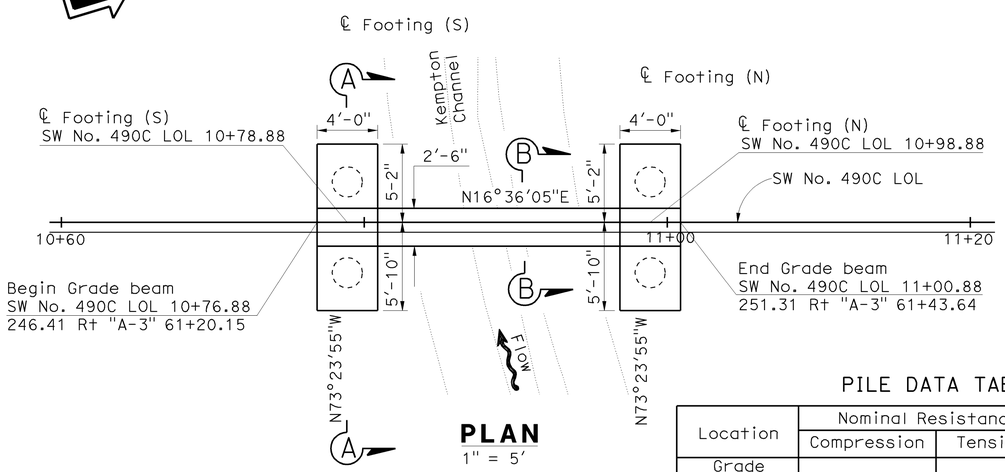

PLAN
1" = 5'

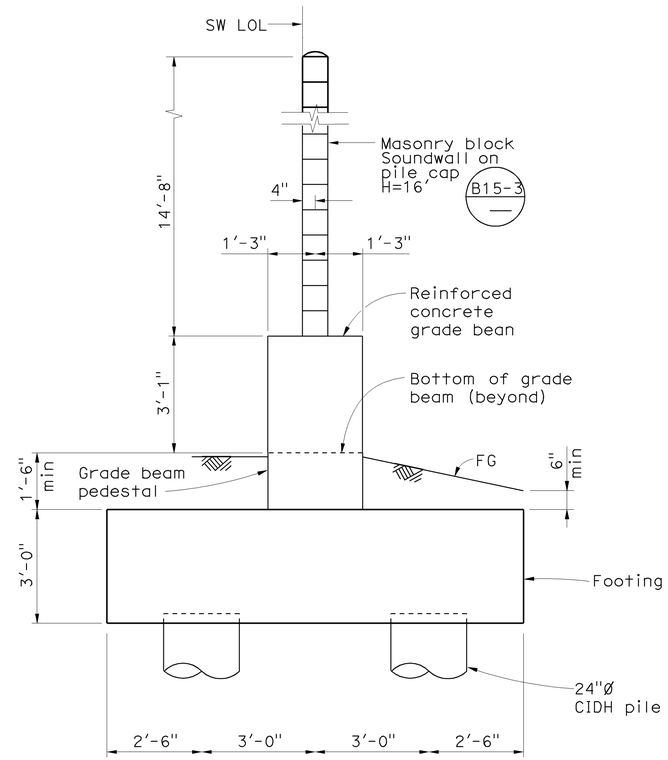

SECTION A-A
½" = 1'-0"

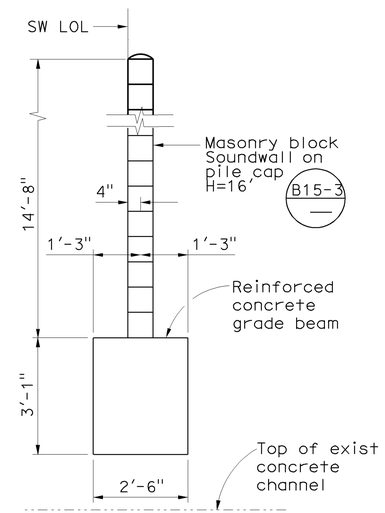

SECTION B-B
½" = 1'-0"

PILE DATA TABLE (24" CIDH CONCRETE PILE)

Location	Nominal Resistance		Design Tip Elevation	Specified Tip Elevation	Nominal Driving Resistance
	Compression	Tension			
Grade Beam Footing (S)	90 kips	10 kips	-15(a), +5(b) -15(c), & -13(d)	-15	n/a
Grade Beam Footing (N)	90 kips	10 kips	-15(a), +5(b) -15(c), & -13(d)	-15	n/a

Design tip elevations are controlled by the following demands:
(a) Compression, (b) Tension, (c) Settlement, and (d) Lateral Loads

NOTE:
THE CONTRACTOR SHALL VERIFY ALL CONTROLLING FIELD DIMENSIONS BEFORE ORDERING OR FABRICATING ANY MATERIAL.

SW-27

DESIGN OVERSIGHT X SIGN OFF DATE	DESIGN	BY V. Trinh	CHECKED S. Nagi	LOAD AND RESISTANCE FACTOR DESIGN (LRFD)	LIVE LOADING: HL-93 TRUCK, TANDEM AND PERMIT DESIGN LOAD (P15)
	DETAILS	BY V. Trinh	CHECKED S. Nagi	LAYOUT	BY V. Trinh — CHECKED S. Nagi
	QUANTITIES	BY K. Coates	CHECKED V. Trinh	SPECIFICATIONS	BY EL Tyk — PLANS AND SPECS COMPARED V. Trinh

PREPARED FOR THE STATE OF CALIFORNIA DEPARTMENT OF TRANSPORTATION

Vinh Trinh
PROJECT ENGINEER

BRIDGE NO.
POST MILES 3.5

SOUND WALL NO. 490C
GRADE BEAM LAYOUT

DESIGN GENERAL PLAN SHEET (ENGLISH) (REV. 2/25/05)

ORIGINAL SCALE IN INCHES FOR REDUCED PLANS 0 1 2 3

CU 12235
EA 071631

DISREGARD PRINTS BEARING EARLIER REVISION DATES

REVISION DATES (PRELIMINARY STAGE ONLY) 02/16/09 04/06/09 7/21/09

SHEET 1 OF 2

FILE => c07163rd027.dgn

USERNAME => trmnguye DATE PLOTTED => 04-FEB-2010 TIME PLOTTED => 08:48

DIST	COUNTY	ROUTE	POST MILES TOTAL PROJECT	SHEET No	TOTAL SHEETS
12	Ora	22,405, 605	R0.3/R0.9, 22.3/24.0,3.0/R1.6	1141	1929

REGISTERED CIVIL ENGINEER 7/27/09 DATE

2-1-10
PLANS APPROVAL DATE

REGISTERED PROFESSIONAL ENGINEER VINH TRINH No. C 50685 Exp. 9-30-09 CIVIL STATE OF CALIFORNIA

The State of California or its officers or agents shall not be responsible for the accuracy or completeness of electronic copies of this plan sheet.

OCTA
550 SOUTH MAIN STREET
ORANGE, CA 92863

WKE, Inc.
400 N. Tustin Ave, Suite 285
Santa Ana, CA 92705

STANDARD PLANS DATED MAY 2006

A10A	Acronyms and Abbreviations (Sheet 1 of 2)
A10B	Acronyms and Abbreviations (Sheet 2 of 2)
A10C	Symbols (Sheet 1 of 2)
A10D	Symbols (Sheet 2 of 2)
B15-3	Sound Wall Masonry Block on Pile Cap Details (1)
B15-4	Sound Wall Masonry Block on Pile Cap Details (2)
B15-5	Sound Wall Masonry Block on Pile Cap Details (3)

Standard Plan Sheet No.

Detail No.

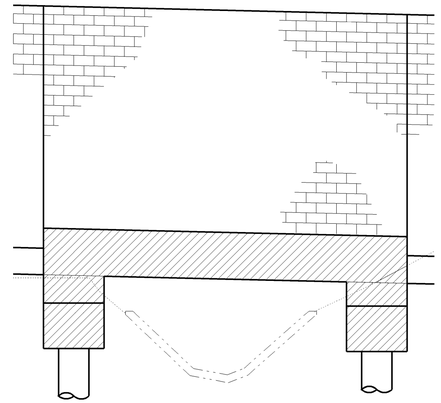

LEGEND

Minor Concrete (Sound Wall)

CONCRETE STRENGTH AND TYPE LIMITS

No Scale

NOTES:

1. Lap splices in spiral reinforcement shall be lapped at least 80 wire diameters. Spiral reinforcement at splices and at ends shall be hooked around a longitudinal bar.

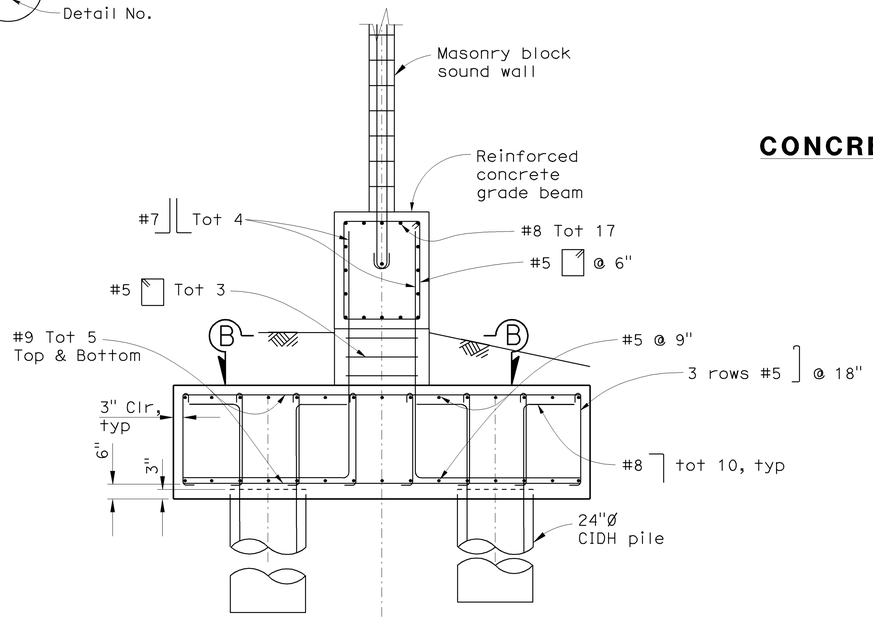

FOOTING DETAILS

½" = 1'-0"

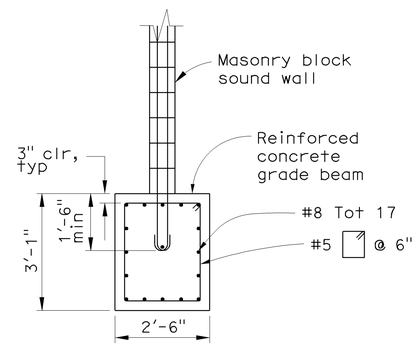

GRADE BEAM DETAILS

½" = 1'-0"

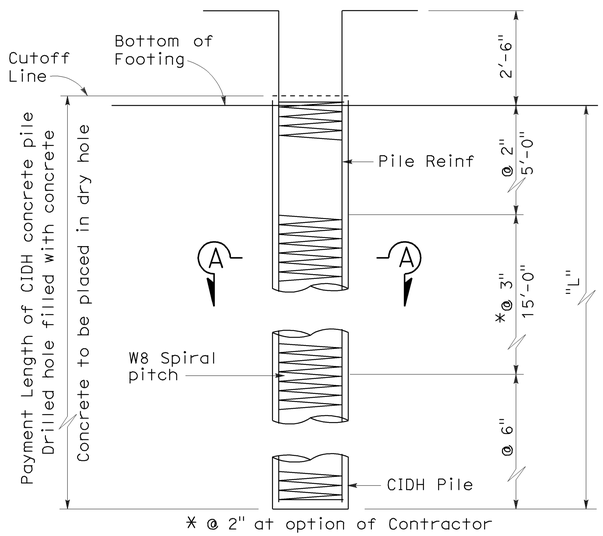

24" DIA CIDH CONCRETE PILE

½" = 1'-0"

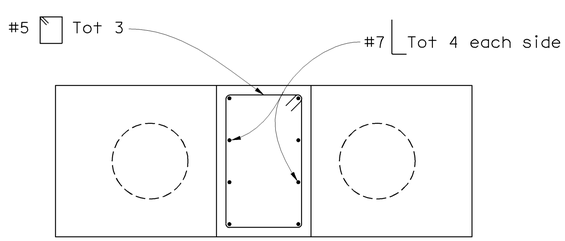

SECTION B-B

½" = 1'-0"

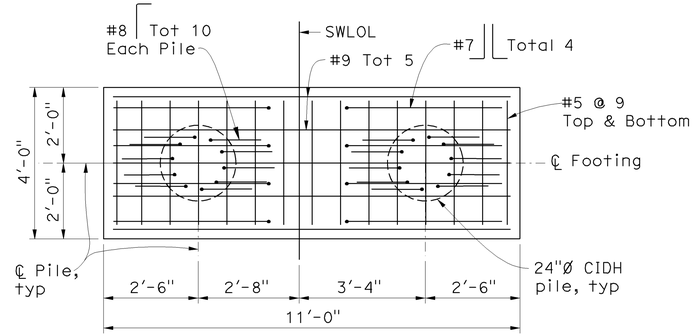

FOOTING PLAN

½" = 1'-0"

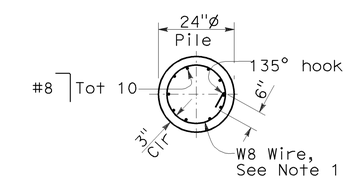

SECTION A-A

½" = 1'-0"

NOTE:
THE CONTRACTOR SHALL VERIFY ALL CONTROLLING FIELD DIMENSIONS BEFORE ORDERING OR FABRICATING ANY MATERIAL.

SW-28

DESIGN	BY V. Trinh	CHECKED S. Nagi	
DETAILS	BY V. Trinh	CHECKED S. Nagi	
QUANTITIES	BY K. Coates	CHECKED V. Trinh	

DESIGN OVERSIGHT
X
SIGN OFF DATE

PREPARED FOR THE STATE OF CALIFORNIA DEPARTMENT OF TRANSPORTATION

Vinh Trinh
PROJECT ENGINEER

BRIDGE NO.
POST MILE 3.5

SOUND WALL NO. 490C
GRADE BEAM DETAILS

DESIGN DETAIL SHEET (ENGLISH) (REV. 2/25/05)

ORIGINAL SCALE IN INCHES FOR REDUCED PLANS 0 1 2 3

CU 12235
EA 071631

DISREGARD PRINTS BEARING EARLIER REVISION DATES

REVISION DATES (PRELIMINARY STAGE ONLY) 04/06/09 7/27/09

SHEET 2 OF 2

FILE => c07163rd028.dgn

USERNAME => trmnguye DATE PLOTTED => 04-FEB-2010 TIME PLOTTED => 08:48

Dist	COUNTY	ROUTE	POST MILES TOTAL PROJECT	SHEET No.	TOTAL SHEETS
12	Ora	22,405, 605	R0.3/R0.9, 22.3/24.0,3.0/R1.6	1142	1929

REGISTERED CIVIL ENGINEER 8/10/09 DATE

2-1-10
PLANS APPROVAL DATE

REGISTERED PROFESSIONAL ENGINEER ROSS E. LEW No. C53399 Exp. 6/30/11 CIVIL STATE OF CALIFORNIA

THE STATE OF CALIFORNIA OR ITS OFFICERS OR AGENTS SHALL NOT BE RESPONSIBLE FOR THE ACCURACY OR COMPLETENESS OF ELECTRONIC COPIES OF THIS PLAN SHEET.

TRC
21 TECHNOLOGY Dr
IRVINE, CA 92618

ORANGE COUNTY
TRANSPORTATION AUTHORITY
550 S. MAIN STREET
ORANGE, CA 92863-1584

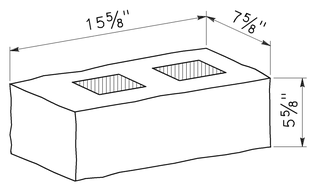

BLOCK "A"
SLUMPSTONE FACE BOTH SIDES
8"x6"x16" NOMINAL SIZE

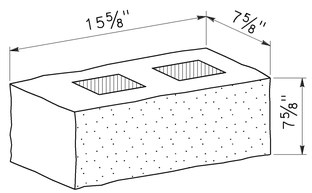

BLOCK "B"
SPLIT FACE ONE SIDE
PRECISION FACE OTHER SIDE
8"x8"x16" NOMINAL SIZE

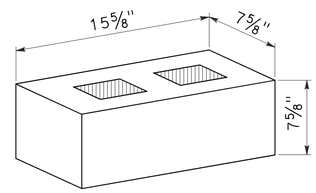

BLOCK "C"
PRECISION FACE BOTH SIDES
8"x8"x16" NOMINAL SIZE

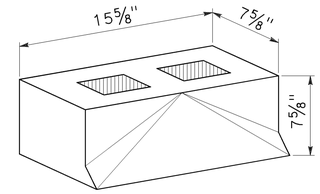

BLOCK "D"
SHADOW FACE ONE SIDE
PRECISION FACE OTHER SIDE
8"x8"x16" NOMINAL SIZE

MASONRY BLOCK DETAILS

LEGEND

- A — BLOCK "A" COLOR - LIGHT BEIGE (MATCH Exist BLOCKS)
- B — BLOCK "B" COLOR - LIGHT BEIGE (MATCH Exist BLOCKS)
- C — BLOCK "C" COLOR - LIGHT (MATCH Exist BLOCKS)
- D — BLOCK "D" COLOR - LIGHT BEIGE (MATCH Exist SHADOW BLOCKS)

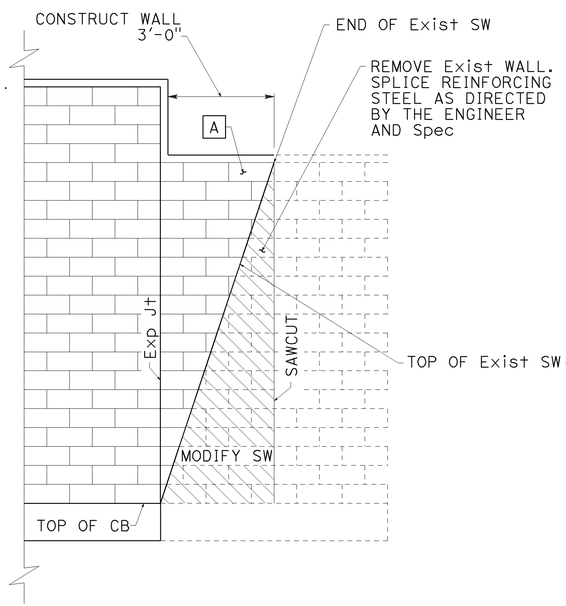

* ALTERNATIVE 1

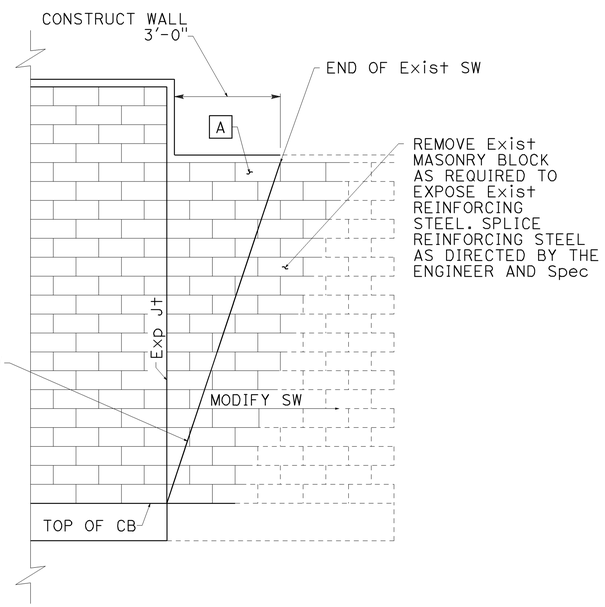

* ALTERNATIVE 2

* CONTRACTOR TO SELECT ALTERNATIVE

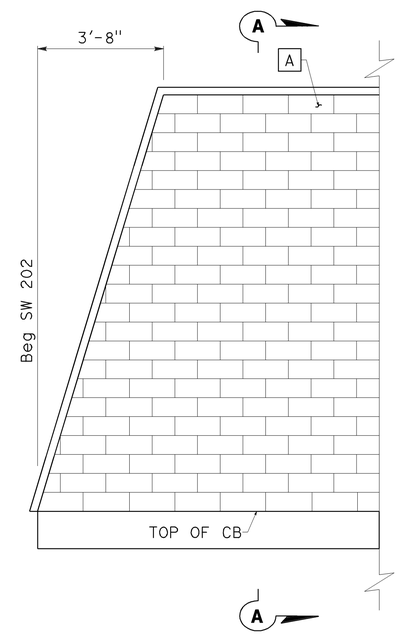

SOUND WALL No. 202 AESTHETICS

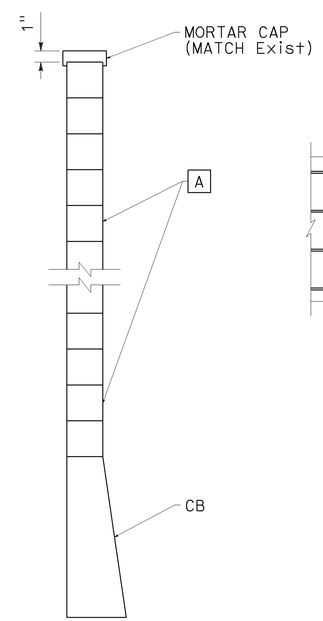

SECTION A-A

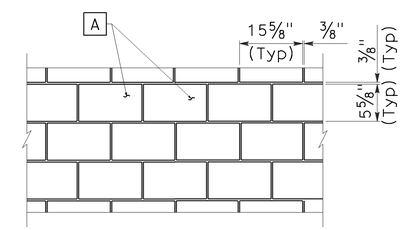

BLOCK LAYOUT

SOUND WALL DETAILS

NO SCALE

SW-29

THIS PLAN ACCURATE FOR SOUND WALL WORK ONLY

STATE OF CALIFORNIA - DEPARTMENT OF TRANSPORTATION
Caltrans

REVISED BY	DATE REVISED
DBL	8/10/09

JASON YAW — ROSS LEW
CALCULATED-DESIGNED BY — CHECKED BY
CONSULTANT FUNCTIONAL SUPERVISOR: ROSS LEW

LAST REVISION 08-10-09 | DATE PLOTTED => 04-FEB-2010 | TIME PLOTTED => 08:48

Dist	COUNTY	ROUTE	POST MILES TOTAL PROJECT	SHEET No.	TOTAL SHEETS
12	Ora	22,405, 605	R0.3/R0.9, 22.3/24.0,3.0/R1.6	1143	1929

REGISTERED CIVIL ENGINEER 8/10/09 DATE

2-1-10
PLANS APPROVAL DATE

REGISTERED PROFESSIONAL ENGINEER ROSS E. LEW No. C53399 Exp. 6/30/11 CIVIL STATE OF CALIFORNIA

THE STATE OF CALIFORNIA OR ITS OFFICERS OR AGENTS SHALL NOT BE RESPONSIBLE FOR THE ACCURACY OR COMPLETENESS OF ELECTRONIC COPIES OF THIS PLAN SHEET.

TRC
21 TECHNOLOGY Dr
IRVINE, CA 92618

ORANGE COUNTY
TRANSPORTATION AUTHORITY
550 S. MAIN STREET
ORANGE, CA 92863-1584

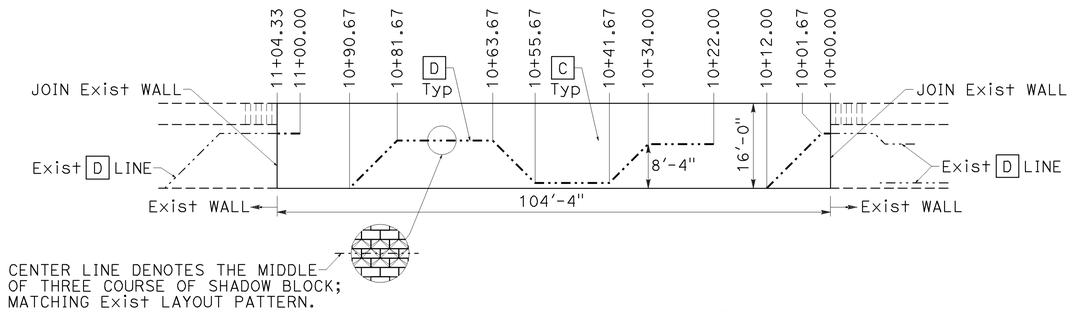

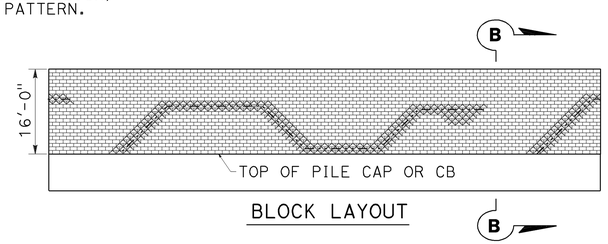

BLOCK LAYOUT

SOUND WALL No. 464 AESTHETICS

ELEVATION

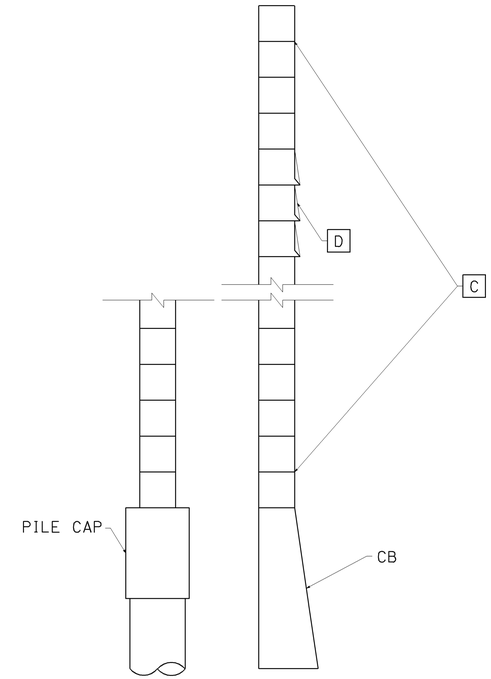

SECTION B-B

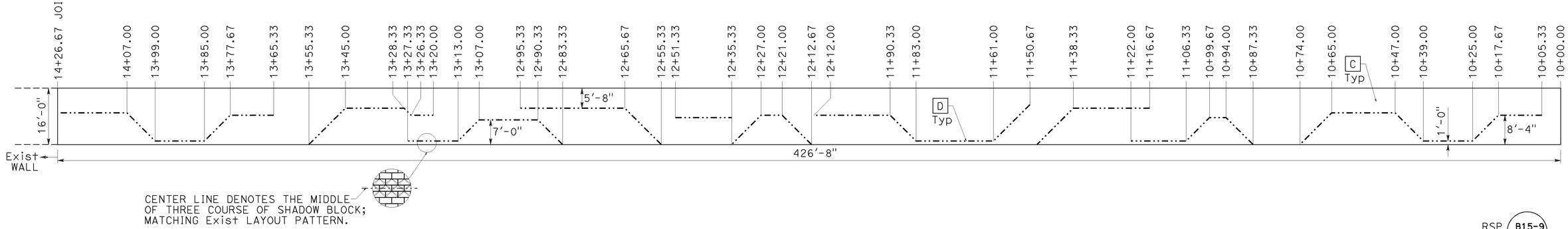

RSP B15-9 TYPE 4

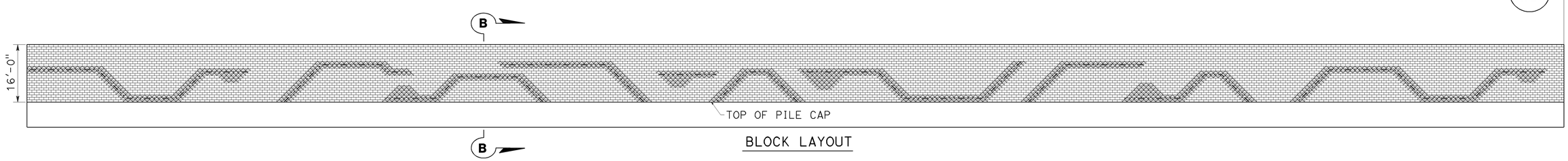

BLOCK LAYOUT

SOUND WALL No. 446 AESTHETICS

ELEVATION

SOUND WALL DETAILS

NO SCALE

SW-30

THIS PLAN ACCURATE FOR SOUND WALL WORK ONLY

STATE OF CALIFORNIA - DEPARTMENT OF TRANSPORTATION
Caltrans

CONSULTANT FUNCTIONAL SUPERVISOR: ROSS LEW
CALCULATED-DESIGNED BY: JASON YAW
CHECKED BY: ROSS LEW
REVISED BY: DBL
DATE REVISED: 8/10/09

LAST REVISION 08-10-09 | DATE PLOTTED => 04-FEB-2010 | TIME PLOTTED => 08:48

Dist	COUNTY	ROUTE	POST MILES TOTAL PROJECT	SHEET No.	TOTAL SHEETS
12	Ora	22,405, 605	R0.3/R0.9, 22.3/24.0,3.0/R1.6	1144	1929

REGISTERED CIVIL ENGINEER 12/22/09 DATE

2-1-10
PLANS APPROVAL DATE

REGISTERED PROFESSIONAL ENGINEER ROSS E. LEW No. C53399 Exp. 6/30/11 CIVIL STATE OF CALIFORNIA

THE STATE OF CALIFORNIA OR ITS OFFICERS OR AGENTS SHALL NOT BE RESPONSIBLE FOR THE ACCURACY OR COMPLETENESS OF ELECTRONIC COPIES OF THIS PLAN SHEET.

TRC
21 TECHNOLOGY Dr
IRVINE, CA 92618

ORANGE COUNTY
TRANSPORTATION AUTHORITY
550 S. MAIN STREET
ORANGE, CA 92863-1584

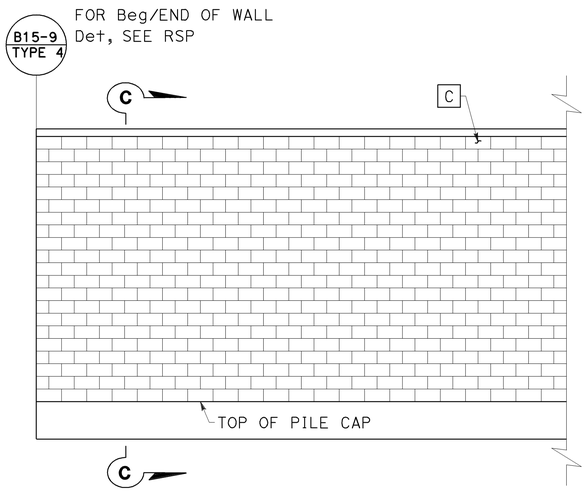

SOUND WALL No. 490 AESTHETICS
ELEVATION

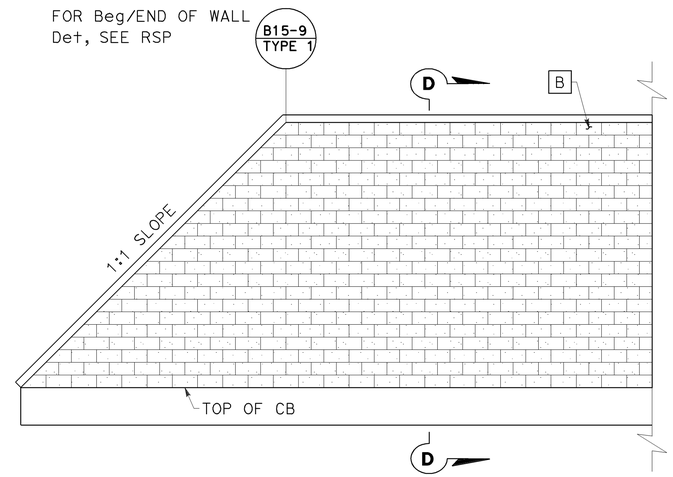

SOUND WALL No. 479 AESTHETICS
ELEVATION

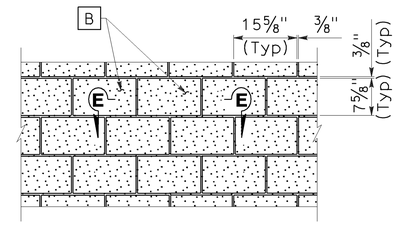

BLOCK LAYOUT

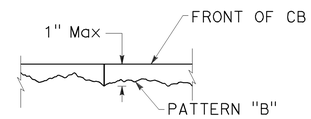

SECTION E-E

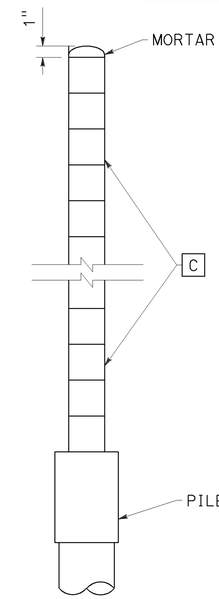

SECTION C-C

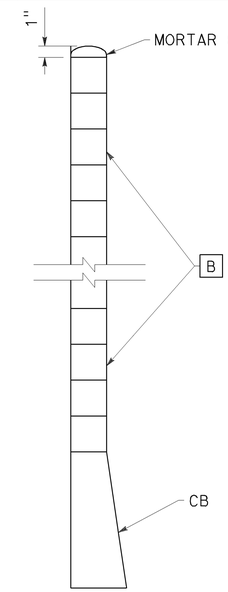

SECTION D-D

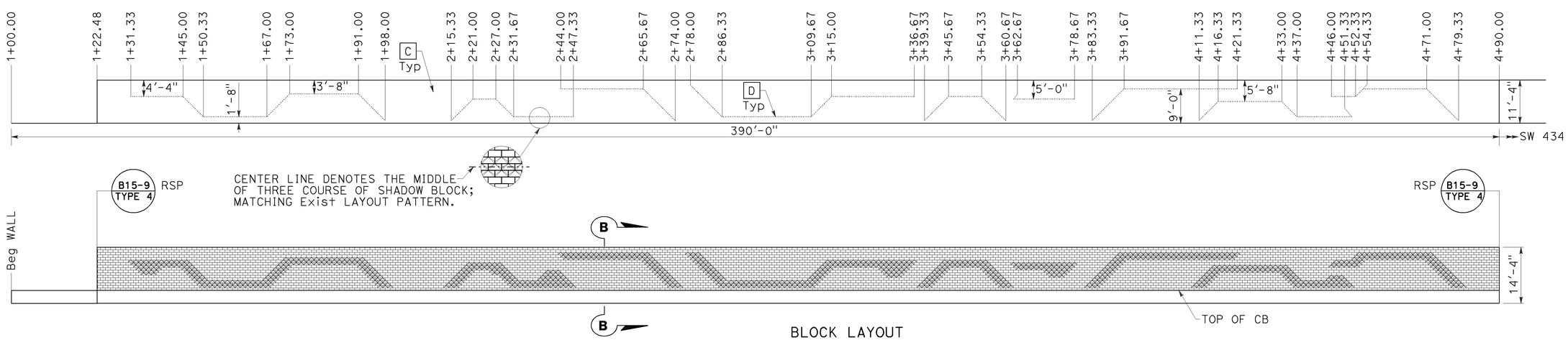

BLOCK LAYOUT

SOUND WALL No. 442 AESTHETICS
ELEVATION

SOUND WALL DETAILS
NO SCALE

SW-31

THIS PLAN ACCURATE FOR SOUND WALL WORK ONLY

STATE OF CALIFORNIA - DEPARTMENT OF TRANSPORTATION
Caltrans

CONSULTANT FUNCTIONAL SUPERVISOR: ROSS LEW
CALCULATED-DESIGNED BY: JASON YAW
CHECKED BY: ROSS LEW
REVISED BY: DBL
DATE REVISED: 12/22/09

LAST REVISION 12-22-09
DATE PLOTTED => 04-FEB-2010
TIME PLOTTED => 08:48

BORDER LAST REVISED 8/1/2008
RELATIVE BORDER SCALE IS IN INCHES 0 1 2 3
USERNAME => trmnguye
DGN FILE => c07163re031.dgn
CU 12235
EA 071631

Dist	COUNTY	ROUTE	POST MILES TOTAL PROJECT	SHEET No.	TOTAL SHEETS
12	Ora	22,405, 605	R0.3/R0.9, 22.3/24.0,3.0/R1.6	1145	1929

REGISTERED CIVIL ENGINEER 8/10/09 DATE

2-1-10
PLANS APPROVAL DATE

REGISTERED PROFESSIONAL ENGINEER ROSS E. LEW No. C53399 Exp. 6/30/11 CIVIL STATE OF CALIFORNIA

THE STATE OF CALIFORNIA OR ITS OFFICERS OR AGENTS SHALL NOT BE RESPONSIBLE FOR THE ACCURACY OR COMPLETENESS OF ELECTRONIC COPIES OF THIS PLAN SHEET.

TRC
21 TECHNOLOGY Dr
IRVINE, CA 92618

ORANGE COUNTY
TRANSPORTATION AUTHORITY
550 S. MAIN STREET
ORANGE, CA 92863-1584

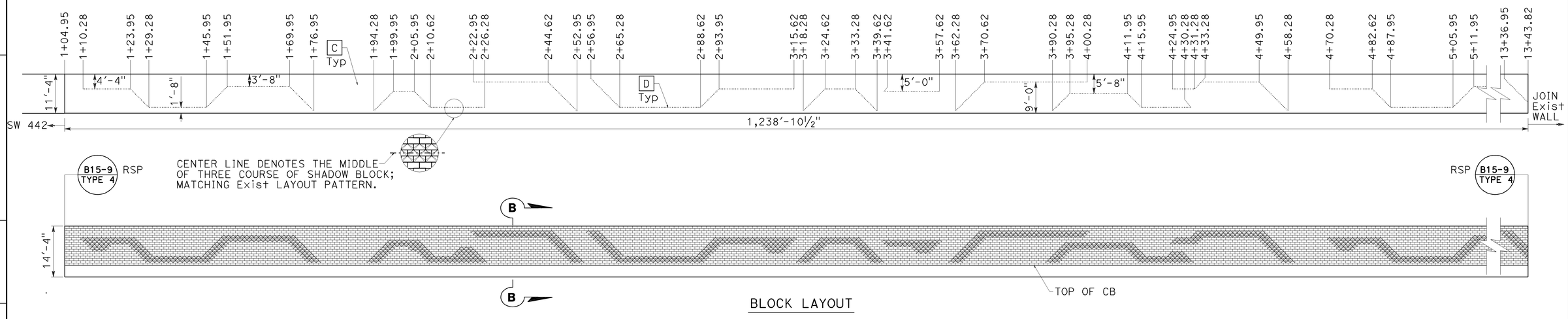

BLOCK LAYOUT

SOUND WALL No. 434 AESTHETICS

ELEVATION

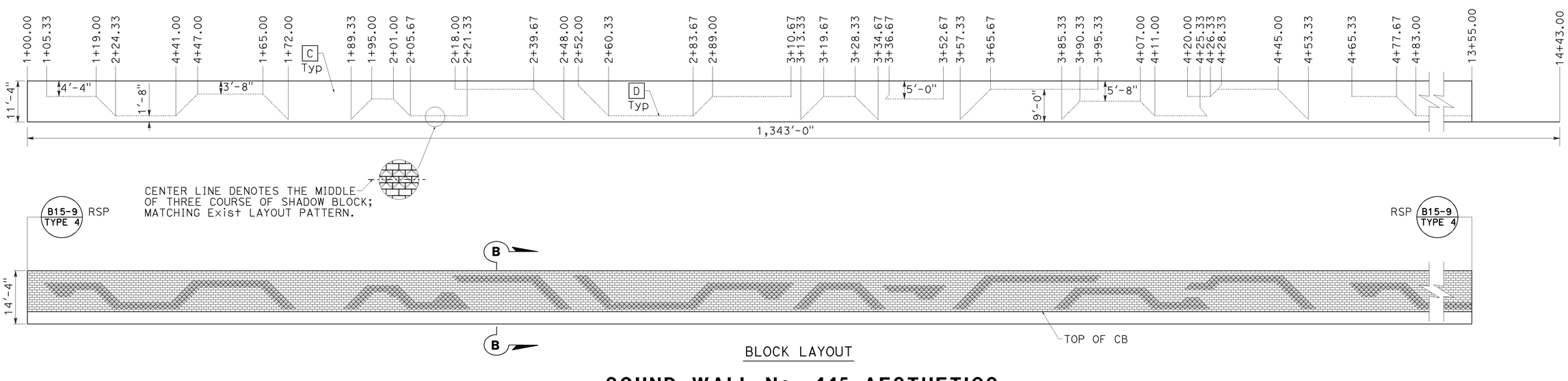

BLOCK LAYOUT

SOUND WALL No. 445 AESTHETICS

ELEVATION

SOUND WALL DETAILS

NO SCALE

SW-32

THIS PLAN ACCURATE FOR SOUND WALL WORK ONLY

REVISED BY	DATE REVISED
DBL	8/10/09

CALCULATED-DESIGNED BY: JASON YAW
CHECKED BY: ROSS LEW
CONSULTANT FUNCTIONAL SUPERVISOR: ROSS LEW
PROJECT ENGINEER: ROSS LEW

STATE OF CALIFORNIA - DEPARTMENT OF TRANSPORTATION

LAST REVISION 08-10-09 | DATE PLOTTED => 04-FEB-2010 | TIME PLOTTED => 08:48

Dist	COUNTY	ROUTE	POST MILES TOTAL PROJECT	SHEET No.	TOTAL SHEETS
12	Ora	22,405, 605	R0.3/R0.9, 22.3/24.0,3.0/R1.6	1146	1929

REGISTERED CIVIL ENGINEER 8/10/09 DATE

2-1-10
PLANS APPROVAL DATE

REGISTERED PROFESSIONAL ENGINEER ROSS E. LEW No. C53399 Exp. 6/30/11 CIVIL STATE OF CALIFORNIA

THE STATE OF CALIFORNIA OR ITS OFFICERS OR AGENTS SHALL NOT BE RESPONSIBLE FOR THE ACCURACY OR COMPLETENESS OF ELECTRONIC COPIES OF THIS PLAN SHEET.

TRC
21 TECHNOLOGY Dr
IRVINE, CA 92618

ORANGE COUNTY
TRANSPORTATION AUTHORITY
550 S. MAIN STREET
ORANGE, CA 92863-1584

SOUND WALL

SHEET No.	STATION LIMITS	WALL No.	SOUND WALL (MASONRY BLOCK)	MINOR CONCRETE (SOUND WALL)	CONCRETE BARRIER (TYPE 736SV)	16" CAST-IN-DRILLED-HOLE CONCRETE PILING (SOUND WALL)	24" CAST-IN-DRILLED-HOLE CONCRETE PILING (SOUND WALL)
			SQFT	CY	LF	LF	LF
SW-1	"A-4" 34+01.22 TO "A-4" 35+78.96	202	1,993		179	512	
SW-5	"A-2" 30+89.96 TO "A-2" 26+93.54	446	6,827	79			753
SW-8 TO SW-12	"XB-3" 55+43.21 TO "XA-5" 34+53.45	479	23,929		2,112	5,693	
SW-16 TO SW-17	"A-3" 44+78.76 TO "A-3" 53+12.86	490A	11,394	75		839	
SW-18 TO SW-19	"A-3" 52+76.07 TO "A-3" 60+81.63	490B	11,882	79		734	
SW-20	"A-3" 60+45.10 TO "A-3" 62+56.23	490C	2,624	16		137	82
SW-21 TO SW-22	"A-3" 62+23.55 TO "A-4" 34+96.09	490D	11,136	68		620	
SUBTOTAL			69,785	317	2,291	8,535	835

NOTE: FOR ADDITIONAL QUANTITIES, SEE STRUCTURE PLANS.

SOUND WALL QUANTITIES

SW-33

THIS PLAN ACCURATE FOR RETAINING WALL WORK ONLY

STATE OF CALIFORNIA - DEPARTMENT OF TRANSPORTATION
Caltrans

CONSULTANT FUNCTIONAL SUPERVISOR: ROSS LEW
CALCULATED-DESIGNED BY: JASON YAW
CHECKED BY: ROSS LEW
REVISED BY: DBL
DATE REVISED: 8/10/09

LAST REVISION 08-10-09 DATE PLOTTED => 04-FEB-2010 TIME PLOTTED => 08:49

Dist	COUNTY	ROUTE	POST MILES TOTAL PROJECT	SHEET No.	TOTAL SHEETS
12	Ora	22,405, 605	R0.3/R0.9, 22.3/24.0,3.0/R1.6	1147	1929

12/22/09
LICENSED LANDSCAPE ARCHITECT DATE

2-1-10
PLANS APPROVAL DATE

LICENSED LANDSCAPE ARCHITECT BRENT PRAEGITZER No.3089 B.PRAEGITZER 5/31/10 Renewal Date 12/12/09 Date STATE OF CALIFORNIA

THE STATE OF CALIFORNIA OR ITS OFFICERS OR AGENTS SHALL NOT BE RESPONSIBLE FOR THE ACCURACY OR COMPLETENESS OF ELECTRONIC COPIES OF THIS PLAN SHEET.

LDP DESIGN GROUP
20101 BIRCH ST
NEWPORT BEACH, CA
92660

ORANGE COUNTY
TRANSPORTATION AUTHORITY
550 S. MAIN STREET
ORANGE, CA 92863-1584

ABBREVIATIONS

AC — acre
B&B — balled and burlapped
CF — cubic feet
CY — cubic yard
EA — each
Ft — foot/feet
g — grams
LBS — pounds
NCN — no common name
No. — number
Pkt — packet
R/W — right of way
SQFT — square feet

PLANT LIST AND PLANTING SPECIFICATIONS

PLANT GROUP	PLANT No.	SYMBOL	BOTANICAL NAME	COMMON NAME	SIZE	QUANTITY EACH	HOLE SIZE (INCH) Dia	HOLE SIZE (INCH) DEPTH	BASIN TYPE	IRON SULFATE	SOIL AMEND	COMMERCIAL FERTILIZER ① PLANTING	COMMERCIAL FERTILIZER ① PLT ESTB	BASIN MULCH	STAKING	PLANTING LIMITS MINIMUM DISTANCE (Ft) FROM: TRVD WAY	PVMT	FENCE	WALL	PAVED DITCH	EARTH DITCH	ON CENTER (Ft)	REMARKS
Z	1		TRANSPLANT PALM TREE	MEXICAN FAN PALM	B & B	6	⑥	⑥	II	—	—	10 PKT	4 PKT	⑥	—	40	—	20	20	20	20	④	

APPLICABLE WHEN CIRCLED:

① - Quantities shown are "per plant" unless shown as square foot application rates.
2 - Sufficient to receive root ball.
3 - Does not apply to mulch areas.
④ - As shown on plans.
5 - Unless otherwise shown on plans.
⑥ - See detail sheet LD-1.
7 - See Special Provisions.

LEGEND

MAINTAIN EXISTING PLANTED AREAS
2,071,690 SQFT/47.6 AC

P — PRUNE EXISTING PLANTS ⑥
133,000 SQFT/3.0 AC

NOTE:

Underlined portions of botanical name indicate abbreviations used on Planting Plans.

PLANT LIST

PL-1

REVISED BY: BP — DATE REVISED: 12-22-09
CHRIS MACDONALD — BRENT PRAEGITZER
CALCULATED-DESIGNED BY — CHECKED BY
CONSULTANT FUNCTIONAL SUPERVISOR: BRENT PRAEGITZER
STATE OF CALIFORNIA - DEPARTMENT OF TRANSPORTATION
Caltrans

LAST REVISION 12-22-09 | DATE PLOTTED => 04-FEB-2010 | TIME PLOTTED => 08:49

Dist	COUNTY	ROUTE	POST MILES TOTAL PROJECT	SHEET No.	TOTAL SHEETS
12	Ora	22,405, 605	R0.3/R0.9, 22.3/24.0,3.0/R1.6	1148	1929

8-10-09
LICENSED LANDSCAPE ARCHITECT DATE

2-1-10
PLANS APPROVAL DATE

LICENSED LANDSCAPE ARCHITECT
BRENT PRAEGITZER No.3089
B.PRAEGITZER
5/31/10
Renewal Date
8/10/09
Date
STATE OF CALIFORNIA

THE STATE OF CALIFORNIA OR ITS OFFICERS OR AGENTS SHALL NOT BE RESPONSIBLE FOR THE ACCURACY OR COMPLETENESS OF ELECTRONIC COPIES OF THIS PLAN SHEET.

LDP DESIGN GROUP
20101 BIRCH ST
NEWPORT BEACH, CA
92660

ORANGE COUNTY
TRANSPORTATION AUTHORITY
550 S. MAIN STREET
ORANGE, CA 92863-1584

NOTE:

1. FOR COMPLETE RIGHT OF WAY AND ACCURATE ACCESS DATA, SEE RIGHT OF WAY RECORD MAPS AT DISTRICT OFFICE.

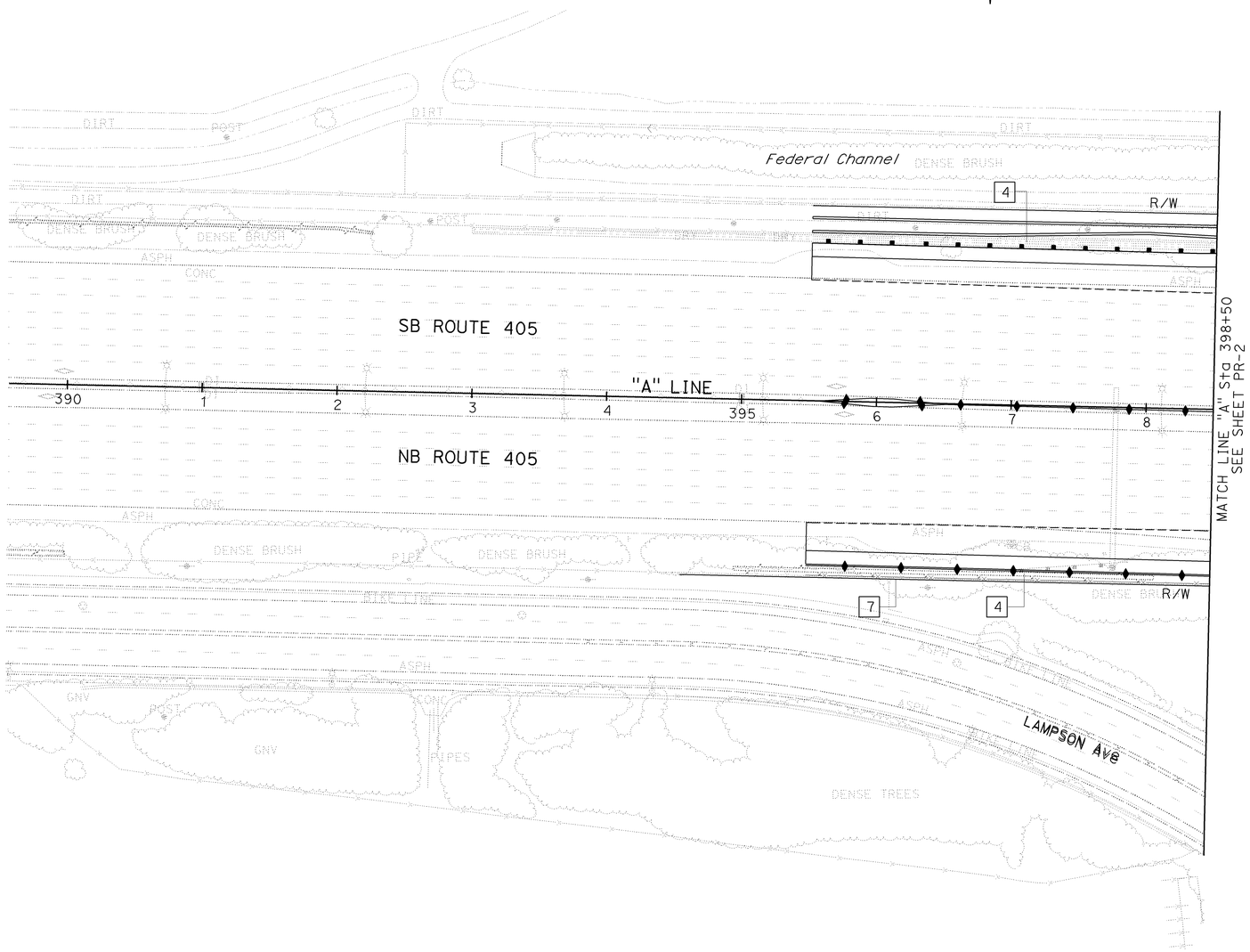

PLANTING NOTES:

1. PROTECT IN PLACE EXISTING PLANTS.
2. PROTECT IN PLACE EXISTING TREES.
3. COORDINATE PLANT REMOVAL WITH PROPERTY OWNER.
4. EXISTING PLANTINGS WILL BE REMOVED DURING ROADWAY CLEARING AND GRUBBING.
5. PRUNE EXISTING PLANTS. SEE SHEET LD-1 DETAIL
6. TRANSPLANT PALM TREE. SEE SHEET LD-1 DETAILS
7. GRADING CUT/FILL LIMIT LINE.
8. MAINTAIN EXISTING PLANTED AREAS.

LEGEND:

EXISTING TREE

DENSE BRUSH — EXISTING PLANTINGS

EXISTING TREES TO REMAIN UNLESS OTHERWISE NOTED

PLANT REMOVAL AND MAINTENANCE PLAN

SCALE: 1" = 50'

PR-1

THIS PLAN ACCURATE FOR PLANTING WORK ONLY.

STATE OF CALIFORNIA - DEPARTMENT OF TRANSPORTATION
Caltrans

CONSULTANT FUNCTIONAL SUPERVISOR: BRENT PRAEGITZER
CALCULATED-DESIGNED BY: CHRIS MACDONALD
CHECKED BY: BRENT PRAEGITZER
REVISED BY: BP
DATE REVISED: 8-10-09

LAST REVISION 08-10-09
DATE PLOTTED => 04-FEB-2010
TIME PLOTTED => 08:49

Dist	COUNTY	ROUTE	POST MILES TOTAL PROJECT	SHEET No.	TOTAL SHEETS
12	Ora	22,405, 605	R0.3/R0.9, 22.3/24.0,3.0/R1.6	1149	1929

LICENSED LANDSCAPE ARCHITECT 8-10-09 DATE

2-1-10
PLANS APPROVAL DATE

LICENSED LANDSCAPE ARCHITECT
BRENT PRAEGITZER No.3089
B.PRAEGITZER
5/31/10
Renewal Date
8/10/09
Date
STATE OF CALIFORNIA

THE STATE OF CALIFORNIA OR ITS OFFICERS OR AGENTS SHALL NOT BE RESPONSIBLE FOR THE ACCURACY OR COMPLETENESS OF ELECTRONIC COPIES OF THIS PLAN SHEET.

LDP DESIGN GROUP
20101 BIRCH ST
NEWPORT BEACH, CA
92660

ORANGE COUNTY
TRANSPORTATION AUTHORITY
550 S. MAIN STREET
ORANGE, CA 92863-1584

NOTE:

1. FOR COMPLETE RIGHT OF WAY AND ACCURATE ACCESS DATA, SEE RIGHT OF WAY RECORD MAPS AT DISTRICT OFFICE.

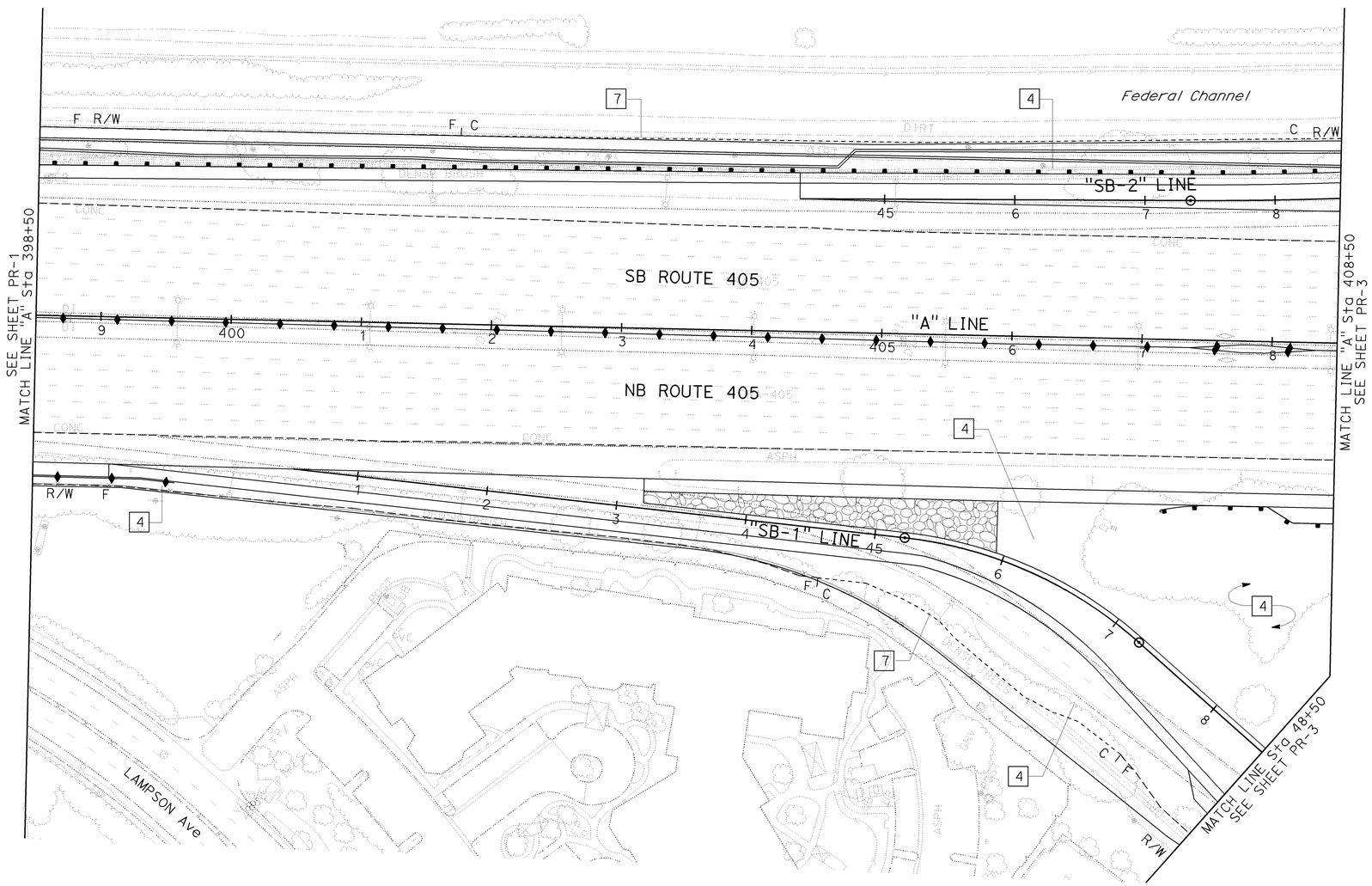

PLANT REMOVAL AND MAINTENANCE PLAN

SCALE: 1" = 50'

PR-2

THIS PLAN ACCURATE FOR PLANTING WORK ONLY.

STATE OF CALIFORNIA - DEPARTMENT OF TRANSPORTATION
Caltrans

CONSULTANT FUNCTIONAL SUPERVISOR: BRENT PRAEGITZER
CALCULATED-DESIGNED BY: CHRIS MACDONALD
CHECKED BY: BRENT PRAEGITZER
REVISED BY: BP
DATE REVISED: 8-10-09

LAST REVISION 08-10-09
DATE PLOTTED => 04-FEB-2010
TIME PLOTTED => 08:49

BORDER LAST REVISED 8/1/2008
RELATIVE BORDER SCALE IS IN INCHES 0 1 2 3
USERNAME => trmnguye
DGN FILE => c07163tf002.dgn
CU 12235
EA 071634

Dist	COUNTY	ROUTE	POST MILES TOTAL PROJECT	SHEET No.	TOTAL SHEETS
12	Ora	22,405, 605	R0.3/R0.9, 22.3/24.0,3.0/R1.6	1150	1929

8-10-09
LICENSED LANDSCAPE ARCHITECT DATE

2-1-10
PLANS APPROVAL DATE

LICENSED LANDSCAPE ARCHITECT
BRENT PRAEGITZER No.2089
B.PRAEGITZER
5/31/10
Renewal Date
8/10/09
Date
STATE OF CALIFORNIA

THE STATE OF CALIFORNIA OR ITS OFFICERS OR AGENTS SHALL NOT BE RESPONSIBLE FOR THE ACCURACY OR COMPLETENESS OF ELECTRONIC COPIES OF THIS PLAN SHEET.

LDP DESIGN GROUP
20101 BIRCH ST
NEWPORT BEACH, CA
92660

ORANGE COUNTY
TRANSPORTATION AUTHORITY
550 S. MAIN STREET
ORANGE, CA 92863-1584

NOTE:

1. FOR COMPLETE RIGHT OF WAY AND ACCURATE ACCESS DATA, SEE RIGHT OF WAY RECORD MAPS AT DISTRICT OFFICE.

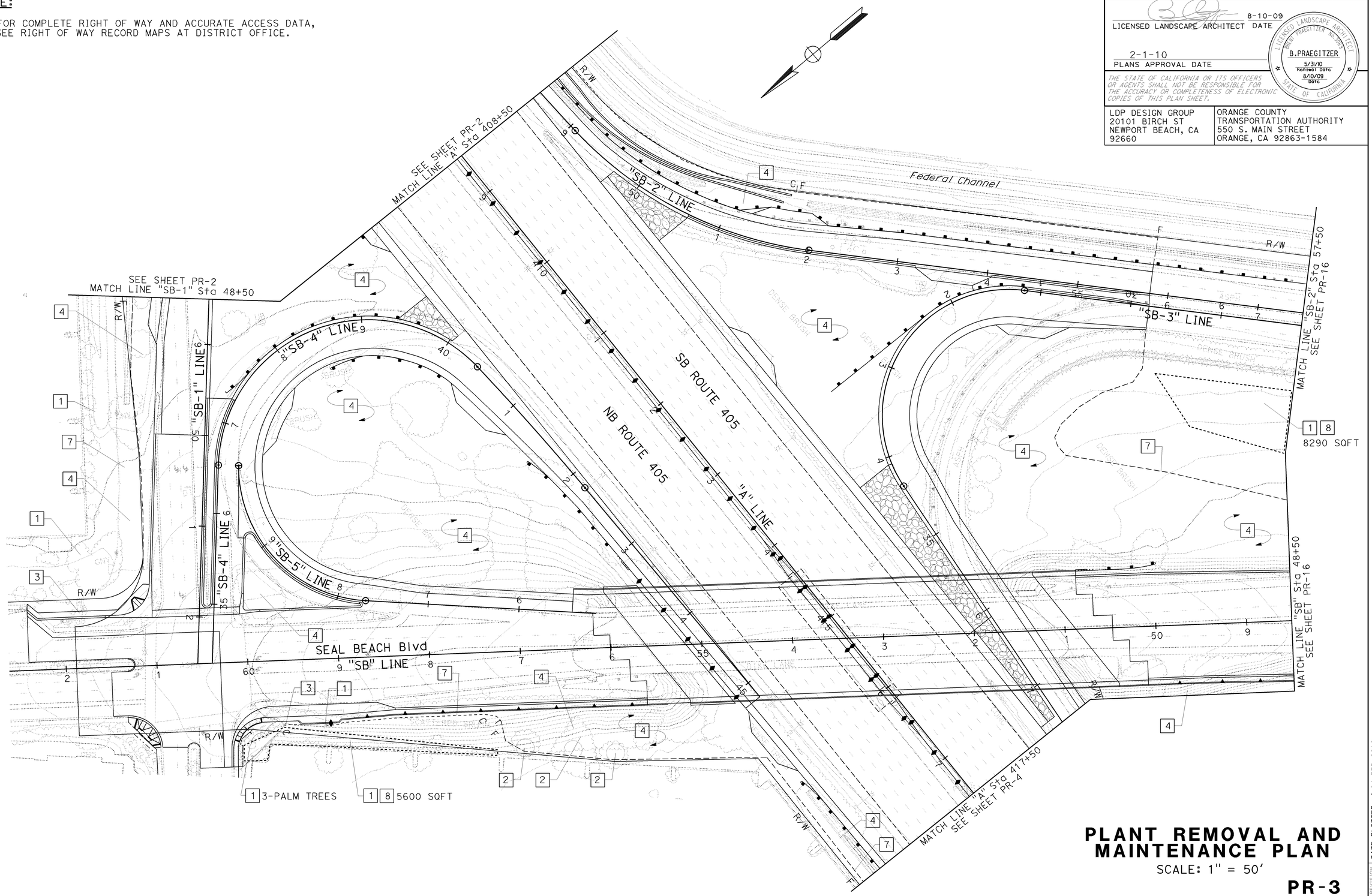

PLANT REMOVAL AND MAINTENANCE PLAN

SCALE: 1" = 50'

PR-3

THIS PLAN ACCURATE FOR PLANTING WORK ONLY.

STATE OF CALIFORNIA - DEPARTMENT OF TRANSPORTATION
Caltrans

CONSULTANT FUNCTIONAL SUPERVISOR: BRENT PRAEGITZER
CALCULATED-DESIGNED BY: CHRIS MACDONALD
CHECKED BY: BRENT PRAEGITZER
REVISED BY: BP
DATE REVISED: 8-10-09

LAST REVISION 08-10-09
DATE PLOTTED => 04-FEB-2010
TIME PLOTTED => 08:49

BORDER LAST REVISED 8/1/2008
RELATIVE BORDER SCALE IS IN INCHES 0 1 2 3
USERNAME => trmnguye
DGN FILE => c071631f003.dgn
CU 12235
EA 071634

Dist	COUNTY	ROUTE	POST MILES TOTAL PROJECT	SHEET No.	TOTAL SHEETS
12	Ora	22,405, 605	R0.3/R0.9, 22.3/24.0,3.0/R1.6	1151	1929

8-10-09
LICENSED LANDSCAPE ARCHITECT DATE

2-1-10
PLANS APPROVAL DATE

LICENSED LANDSCAPE ARCHITECT
BRENT PRAEGITZER No.3089
B.PRAEGITZER
5/31/10
Renewal Date
8/10/09
Date
STATE OF CALIFORNIA

THE STATE OF CALIFORNIA OR ITS OFFICERS OR AGENTS SHALL NOT BE RESPONSIBLE FOR THE ACCURACY OR COMPLETENESS OF ELECTRONIC COPIES OF THIS PLAN SHEET.

LDP DESIGN GROUP
20101 BIRCH ST
NEWPORT BEACH, CA
92660

ORANGE COUNTY
TRANSPORTATION AUTHORITY
550 S. MAIN STREET
ORANGE, CA 92863-1584

NOTE:

1. FOR COMPLETE RIGHT OF WAY AND ACCURATE ACCESS DATA, SEE RIGHT OF WAY RECORD MAPS AT DISTRICT OFFICE.

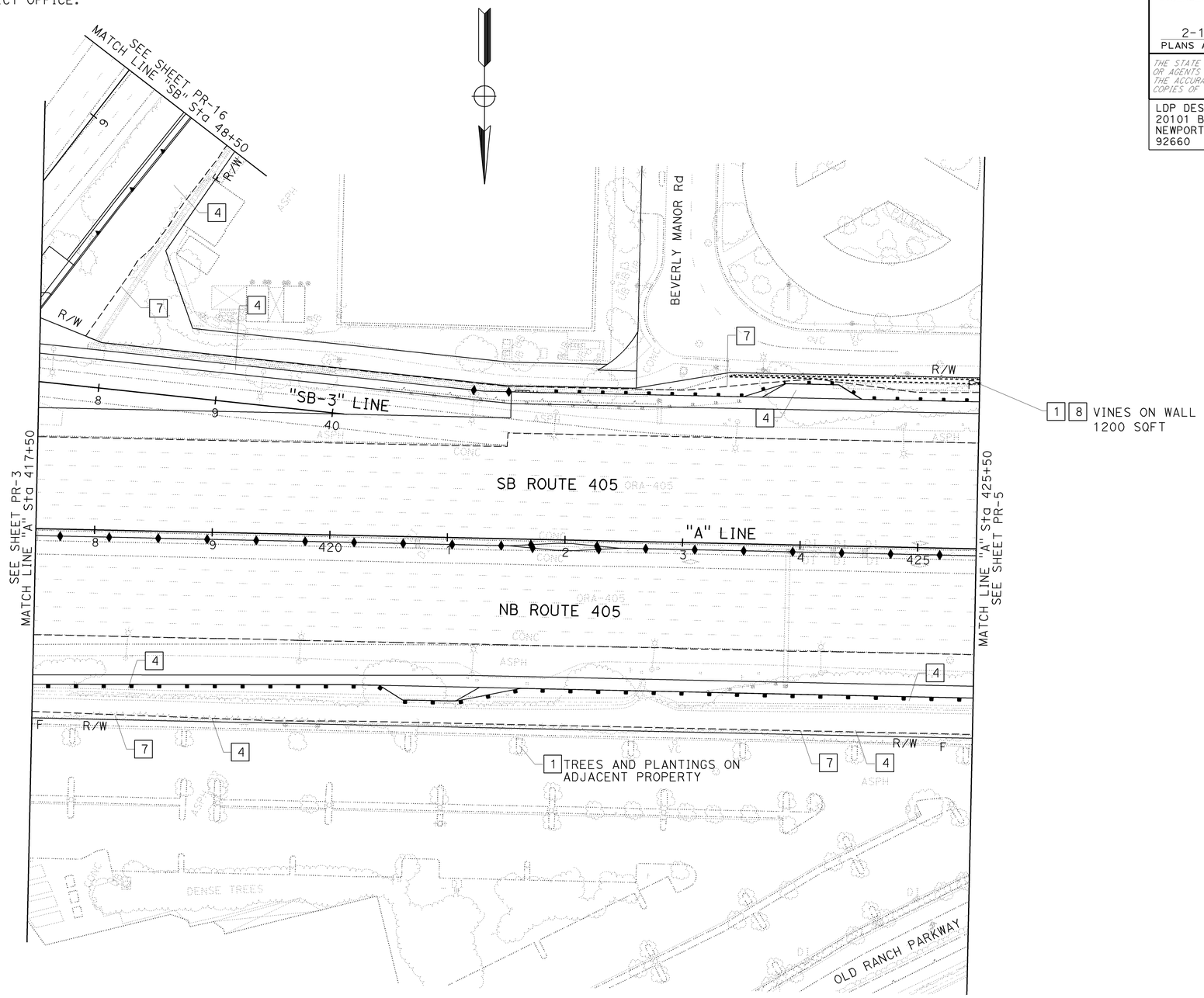

THIS PLAN ACCURATE FOR PLANTING WORK ONLY.

PLANT REMOVAL AND MAINTENANCE PLAN

SCALE: 1" = 50'

PR-4

STATE OF CALIFORNIA - DEPARTMENT OF TRANSPORTATION
Caltrans

CONSULTANT FUNCTIONAL SUPERVISOR: BRENT PRAEGITZER
CALCULATED-DESIGNED BY: CHRIS MACDONALD
CHECKED BY: BRENT PRAEGITZER
REVISED BY: BP
DATE REVISED: 8-10-09

LAST REVISION 08-10-09
DATE PLOTTED => 04-FEB-2010
TIME PLOTTED => 08:49

Dist	COUNTY	ROUTE	POST MILES TOTAL PROJECT	SHEET No.	TOTAL SHEETS
12	Ora	22,405, 605	R0.3/R0.9, 22.3/24.0,3.0/R1.6	1152	1929

LICENSED LANDSCAPE ARCHITECT 8-10-09 DATE

2-1-10
PLANS APPROVAL DATE

LICENSED LANDSCAPE ARCHITECT BRENT PRAEGITZER No.3089 B.PRAEGITZER 5/31/10 Renewal Date 8/10/09 Date STATE OF CALIFORNIA

THE STATE OF CALIFORNIA OR ITS OFFICERS OR AGENTS SHALL NOT BE RESPONSIBLE FOR THE ACCURACY OR COMPLETENESS OF ELECTRONIC COPIES OF THIS PLAN SHEET.

LDP DESIGN GROUP
20101 BIRCH ST
NEWPORT BEACH, CA
92660

ORANGE COUNTY
TRANSPORTATION AUTHORITY
550 S. MAIN STREET
ORANGE, CA 92863-1584

NOTE:

1. FOR COMPLETE RIGHT OF WAY AND ACCURATE ACCESS DATA, SEE RIGHT OF WAY RECORD MAPS AT DISTRICT OFFICE.

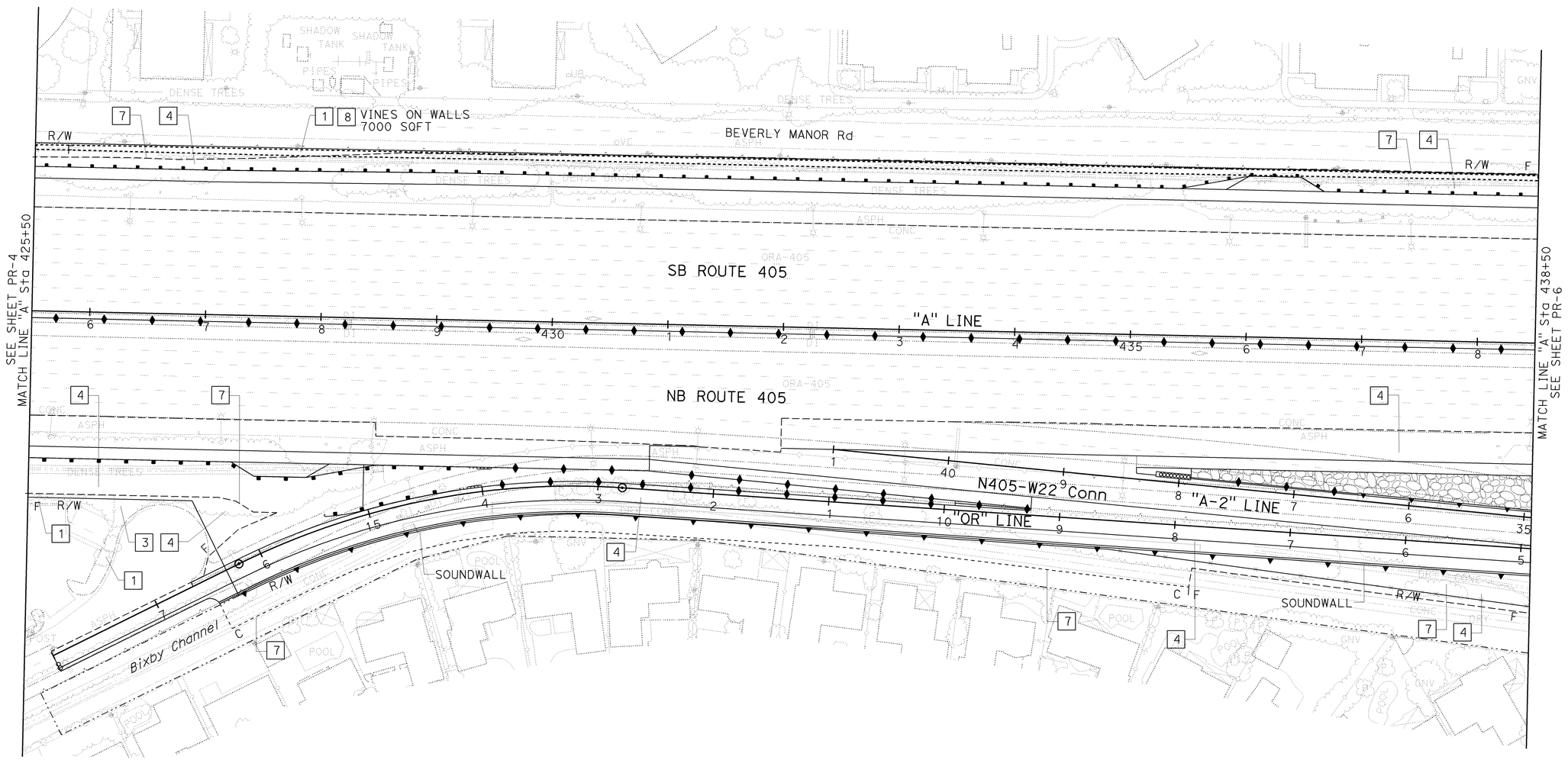

PLANT REMOVAL AND MAINTENANCE PLAN

SCALE: 1" = 50'

PR-5

THIS PLAN ACCURATE FOR PLANTING WORK ONLY.

STATE OF CALIFORNIA - DEPARTMENT OF TRANSPORTATION

Caltrans

CONSULTANT FUNCTIONAL SUPERVISOR: BRENT PRAEGITZER

CALCULATED-DESIGNED BY: CHRIS MACDONALD

CHECKED BY: BRENT PRAEGITZER

REVISED BY: BP

DATE REVISED: 8-10-09

LAST REVISION 08-10-09

DATE PLOTTED => 04-FEB-2010
TIME PLOTTED => 08:50

BORDER LAST REVISED 8/1/2008

RELATIVE BORDER SCALE IS IN INCHES 0 1 2 3

USERNAME => trmnguye
DGN FILE => c071634f005.dgn

CU 12235

EA 071634

Dist	COUNTY	ROUTE	POST MILES TOTAL PROJECT	SHEET No.	TOTAL SHEETS
12	Ora	22,405, 605	R0.3/R0.9, 22.3/24.0,3.0/R1.6	1153	1929

LICENSED LANDSCAPE ARCHITECT 8-10-09 DATE

2-1-10
PLANS APPROVAL DATE

LICENSED LANDSCAPE ARCHITECT BRENT PRAEGITZER No.2089 B.PRAEGITZER 5/31/10 Renewal Date 8/10/09 Date STATE OF CALIFORNIA

THE STATE OF CALIFORNIA OR ITS OFFICERS OR AGENTS SHALL NOT BE RESPONSIBLE FOR THE ACCURACY OR COMPLETENESS OF ELECTRONIC COPIES OF THIS PLAN SHEET.

LDP DESIGN GROUP
20101 BIRCH ST
NEWPORT BEACH, CA
92660

ORANGE COUNTY
TRANSPORTATION AUTHORITY
550 S. MAIN STREET
ORANGE, CA 92863-1584

NOTE:

1. FOR COMPLETE RIGHT OF WAY AND ACCURATE ACCESS DATA, SEE RIGHT OF WAY RECORD MAPS AT DISTRICT OFFICE.

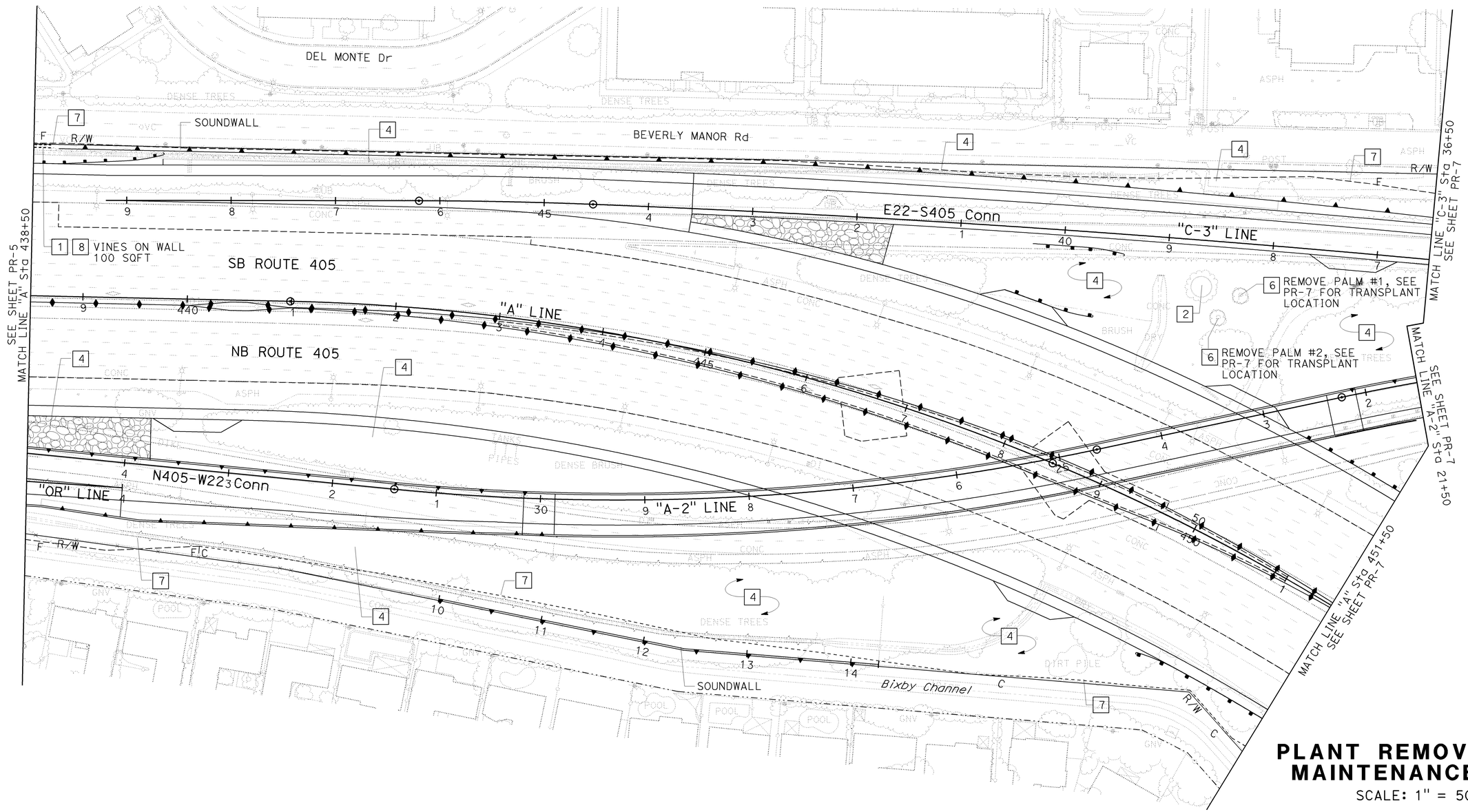

PLANT REMOVAL AND MAINTENANCE PLAN

SCALE: 1" = 50'

PR-6

THIS PLAN ACCURATE FOR PLANTING WORK ONLY.

STATE OF CALIFORNIA - DEPARTMENT OF TRANSPORTATION

Caltrans

CONSULTANT FUNCTIONAL SUPERVISOR: BRENT PRAEGITZER

CALCULATED-DESIGNED BY: CHRIS MACDONALD

CHECKED BY: BRENT PRAEGITZER

REVISED BY: BP

DATE REVISED: 8-10-09

LAST REVISION 08-10-09

DATE PLOTTED => 04-FEB-2010
TIME PLOTTED => 08:50

Dist	COUNTY	ROUTE	POST MILES TOTAL PROJECT	SHEET No.	TOTAL SHEETS
12	Ora	22,405, 605	R0.3/R0.9, 22.3/24.0,3.0/R1.6	1154	1929

8-10-09
LICENSED LANDSCAPE ARCHITECT DATE

2-1-10
PLANS APPROVAL DATE

LICENSED LANDSCAPE ARCHITECT
BRENT PRAEGITZER No.3084
B.PRAEGITZER
5/31/10 Renewal Date
8/10/09 Date
STATE OF CALIFORNIA

THE STATE OF CALIFORNIA OR ITS OFFICERS OR AGENTS SHALL NOT BE RESPONSIBLE FOR THE ACCURACY OR COMPLETENESS OF ELECTRONIC COPIES OF THIS PLAN SHEET.

LDP DESIGN GROUP
20101 BIRCH ST
NEWPORT BEACH, CA
92660

ORANGE COUNTY
TRANSPORTATION AUTHORITY
550 S. MAIN STREET
ORANGE, CA 92863-1584

NOTE:

1. FOR COMPLETE RIGHT OF WAY AND ACCURATE ACCESS DATA, SEE RIGHT OF WAY RECORD MAPS AT DISTRICT OFFICE.

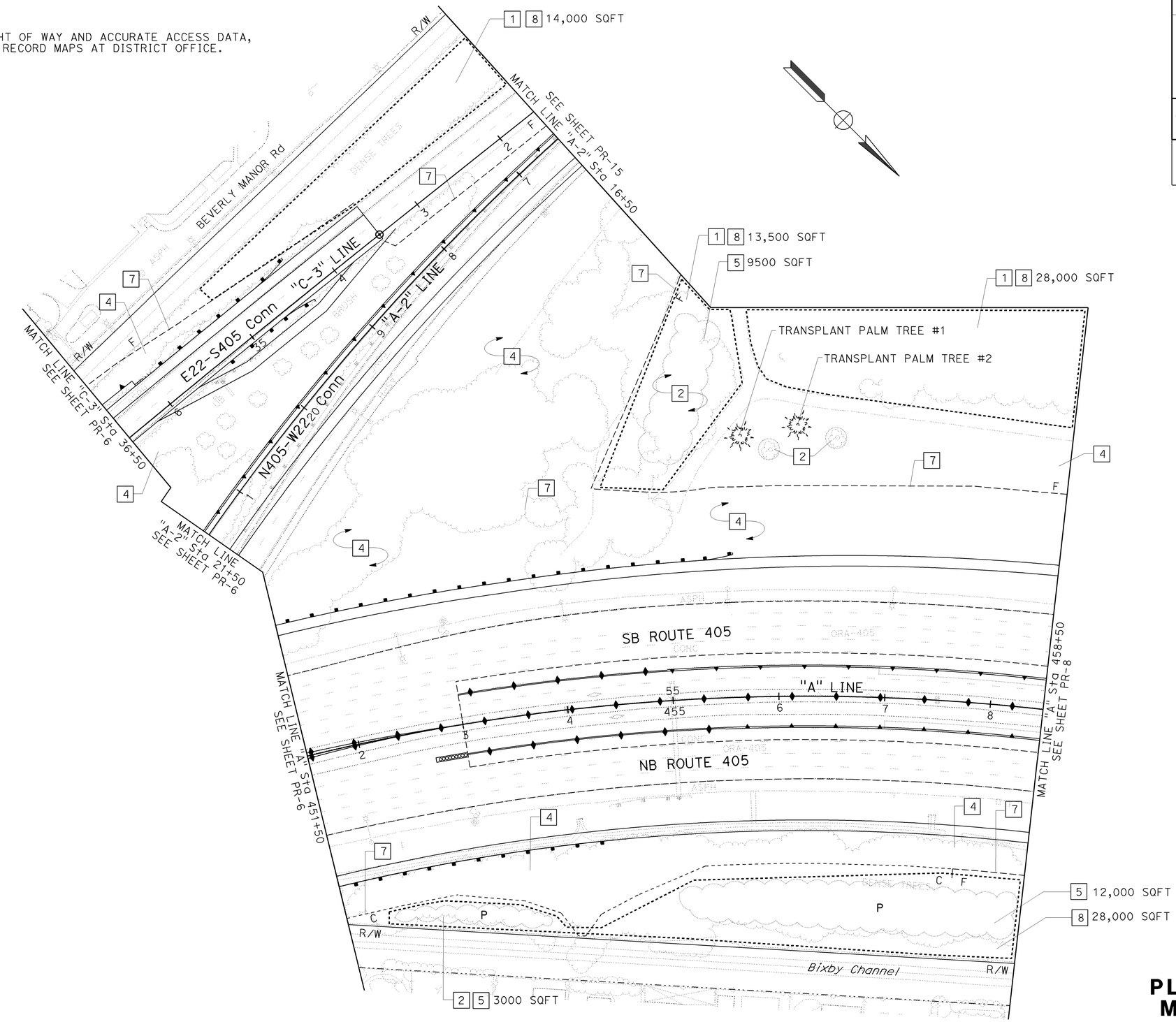

THIS PLAN ACCURATE FOR PLANTING WORK ONLY.

PLANT REMOVAL AND MAINTENANCE PLAN

SCALE: 1" = 50'

PR-7

STATE OF CALIFORNIA - DEPARTMENT OF TRANSPORTATION
Caltrans

CONSULTANT FUNCTIONAL SUPERVISOR: BRENT PRAEGITZER
CALCULATED-DESIGNED BY: CHRIS MACDONALD
CHECKED BY: BRENT PRAEGITZER
REVISED BY: BP
DATE REVISED: 8-10-09

LAST REVISION 08-10-09
DATE PLOTTED => 04-FEB-2010
TIME PLOTTED => 08:50

Dist	COUNTY	ROUTE	POST MILES TOTAL PROJECT	SHEET No.	TOTAL SHEETS
12	Ora	22,405, 605	R0.3/R0.9, 22.3/24.0,3.0/R1.6	1155	1929

8-10-09
LICENSED LANDSCAPE ARCHITECT DATE

2-1-10
PLANS APPROVAL DATE

LICENSED LANDSCAPE ARCHITECT
BRENT PRAEGITZER No.2089
B.PRAEGITZER
5/31/10
Renewal Date
8/10/09
Date
STATE OF CALIFORNIA

THE STATE OF CALIFORNIA OR ITS OFFICERS OR AGENTS SHALL NOT BE RESPONSIBLE FOR THE ACCURACY OR COMPLETENESS OF ELECTRONIC COPIES OF THIS PLAN SHEET.

LDP DESIGN GROUP
20101 BIRCH ST
NEWPORT BEACH, CA
92660

ORANGE COUNTY
TRANSPORTATION AUTHORITY
550 S. MAIN STREET
ORANGE, CA 92863-1584

NOTE:

1. FOR COMPLETE RIGHT OF WAY AND ACCURATE ACCESS DATA, SEE RIGHT OF WAY RECORD MAPS AT DISTRICT OFFICE.

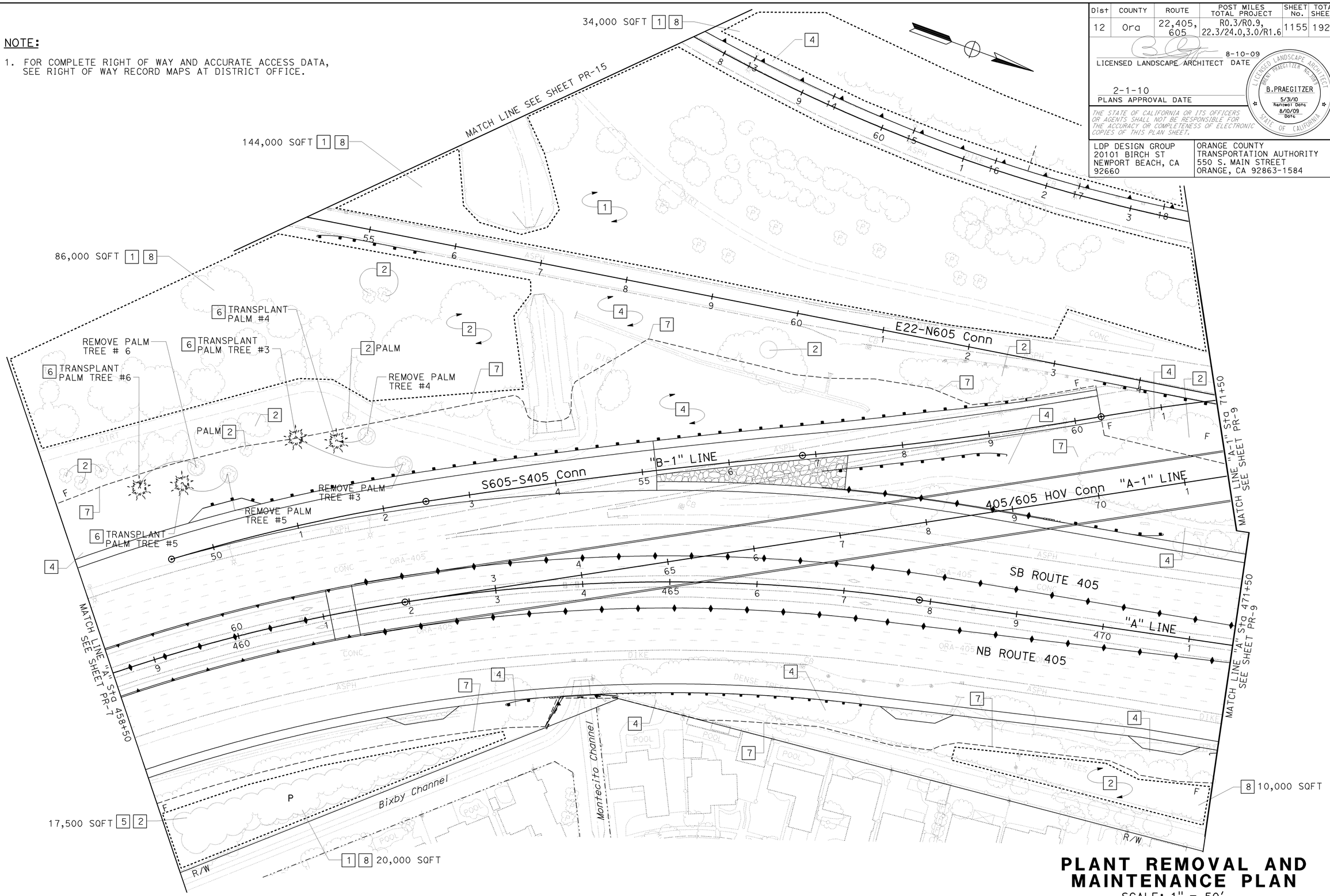

THIS PLAN ACCURATE FOR PLANTING WORK ONLY.

PLANT REMOVAL AND MAINTENANCE PLAN

SCALE: 1" = 50'

PR-8

REVISED BY	BP
DATE REVISED	8-10-09
CHRIS MACDONALD	
BRENT PRAEGITZER	
CALCULATED-DESIGNED BY	
CHECKED BY	
CONSULTANT FUNCTIONAL SUPERVISOR	BRENT PRAEGITZER

STATE OF CALIFORNIA - DEPARTMENT OF TRANSPORTATION
Caltrans

LAST REVISION 08-10-09 | DATE PLOTTED => 04-FEB-2010 | TIME PLOTTED => 08:50

Dist	COUNTY	ROUTE	POST MILES TOTAL PROJECT	SHEET No.	TOTAL SHEETS
12	Ora	22,405, 605	R0.3/R0.9, 22.3/24.0,3.0/R1.6	1156	1929

8-10-09
LICENSED LANDSCAPE ARCHITECT DATE

2-1-10
PLANS APPROVAL DATE

LICENSED LANDSCAPE ARCHITECT
BRENT PRAEGITZER No.2509
B.PRAEGITZER
5/31/10
Renewal Date
8/10/09
Date
STATE OF CALIFORNIA

THE STATE OF CALIFORNIA OR ITS OFFICERS OR AGENTS SHALL NOT BE RESPONSIBLE FOR THE ACCURACY OR COMPLETENESS OF ELECTRONIC COPIES OF THIS PLAN SHEET.

LDP DESIGN GROUP
20101 BIRCH ST
NEWPORT BEACH, CA
92660

ORANGE COUNTY
TRANSPORTATION AUTHORITY
550 S. MAIN STREET
ORANGE, CA 92863-1584

NOTE:

1. FOR COMPLETE RIGHT OF WAY AND ACCURATE ACCESS DATA, SEE RIGHT OF WAY RECORD MAPS AT DISTRICT OFFICE.

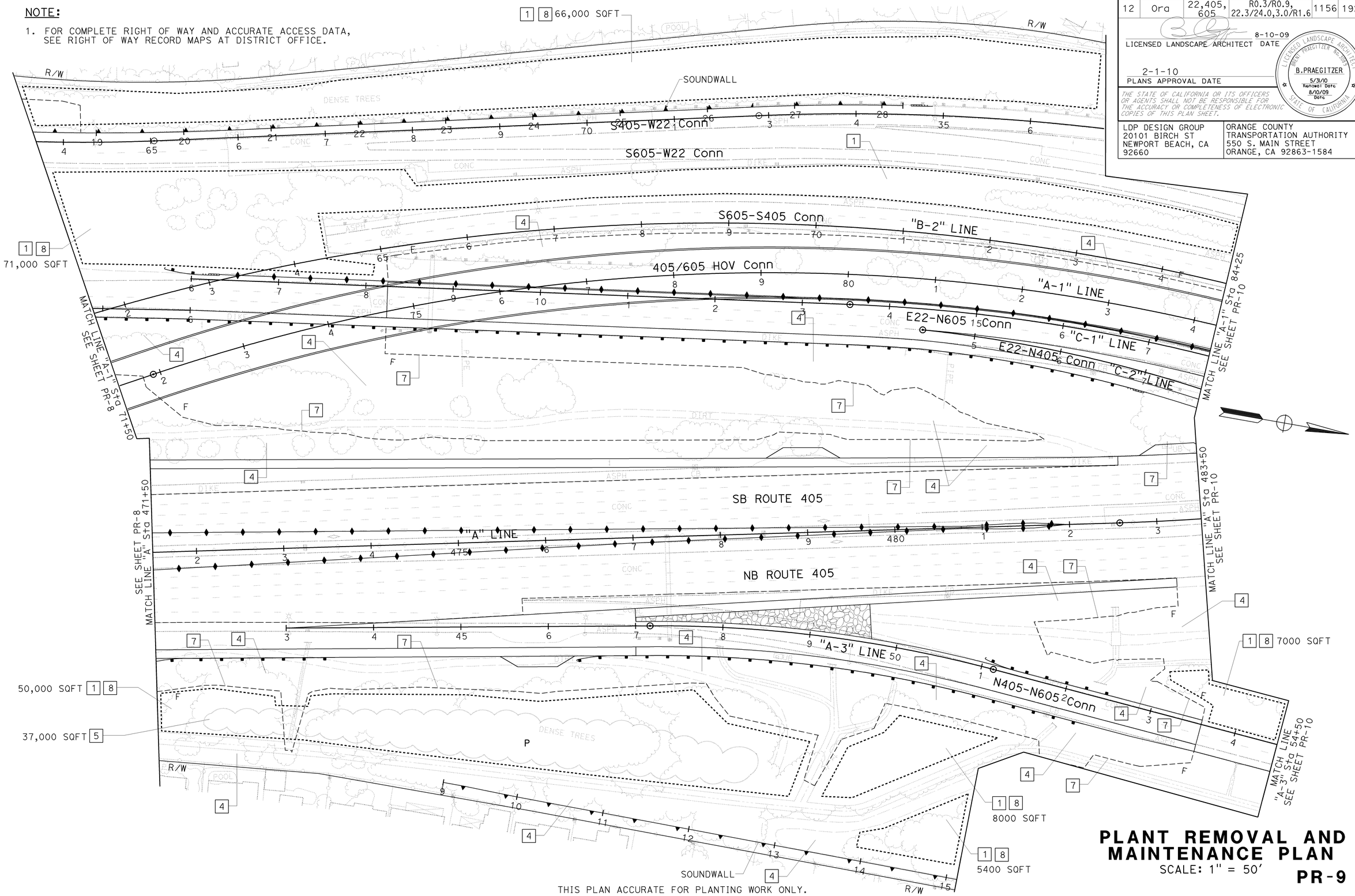

THIS PLAN ACCURATE FOR PLANTING WORK ONLY.

PLANT REMOVAL AND MAINTENANCE PLAN

SCALE: 1" = 50'

PR-9

CHRIS MACDONALD	BP
BRENT PRAEGITZER	8-10-09
CALCULATED-DESIGNED BY	REVISED BY
CHECKED BY	DATE REVISED
CONSULTANT FUNCTIONAL SUPERVISOR	
BRENT PRAEGITZER	

STATE OF CALIFORNIA - DEPARTMENT OF TRANSPORTATION
Caltrans

LAST REVISION 08-10-09 DATE PLOTTED => 04-FEB-2010 TIME PLOTTED => 08:50

Dist	COUNTY	ROUTE	POST MILES TOTAL PROJECT	SHEET No.	TOTAL SHEETS
12	Ora	22,405, 605	R0.3/R0.9, 22.3/24.0,3.0/R1.6	1157	1929

8-10-09
LICENSED LANDSCAPE ARCHITECT DATE

2-1-10
PLANS APPROVAL DATE

LICENSED LANDSCAPE ARCHITECT
BRENT PRAEGITZER No. 2089
B.PRAEGITZER
5/31/10
Renewal Date
8/10/09
Date
STATE OF CALIFORNIA

THE STATE OF CALIFORNIA OR ITS OFFICERS OR AGENTS SHALL NOT BE RESPONSIBLE FOR THE ACCURACY OR COMPLETENESS OF ELECTRONIC COPIES OF THIS PLAN SHEET.

LDP DESIGN GROUP
20101 BIRCH ST
NEWPORT BEACH, CA
92660

ORANGE COUNTY
TRANSPORTATION AUTHORITY
550 S. MAIN STREET
ORANGE, CA 92863-1584

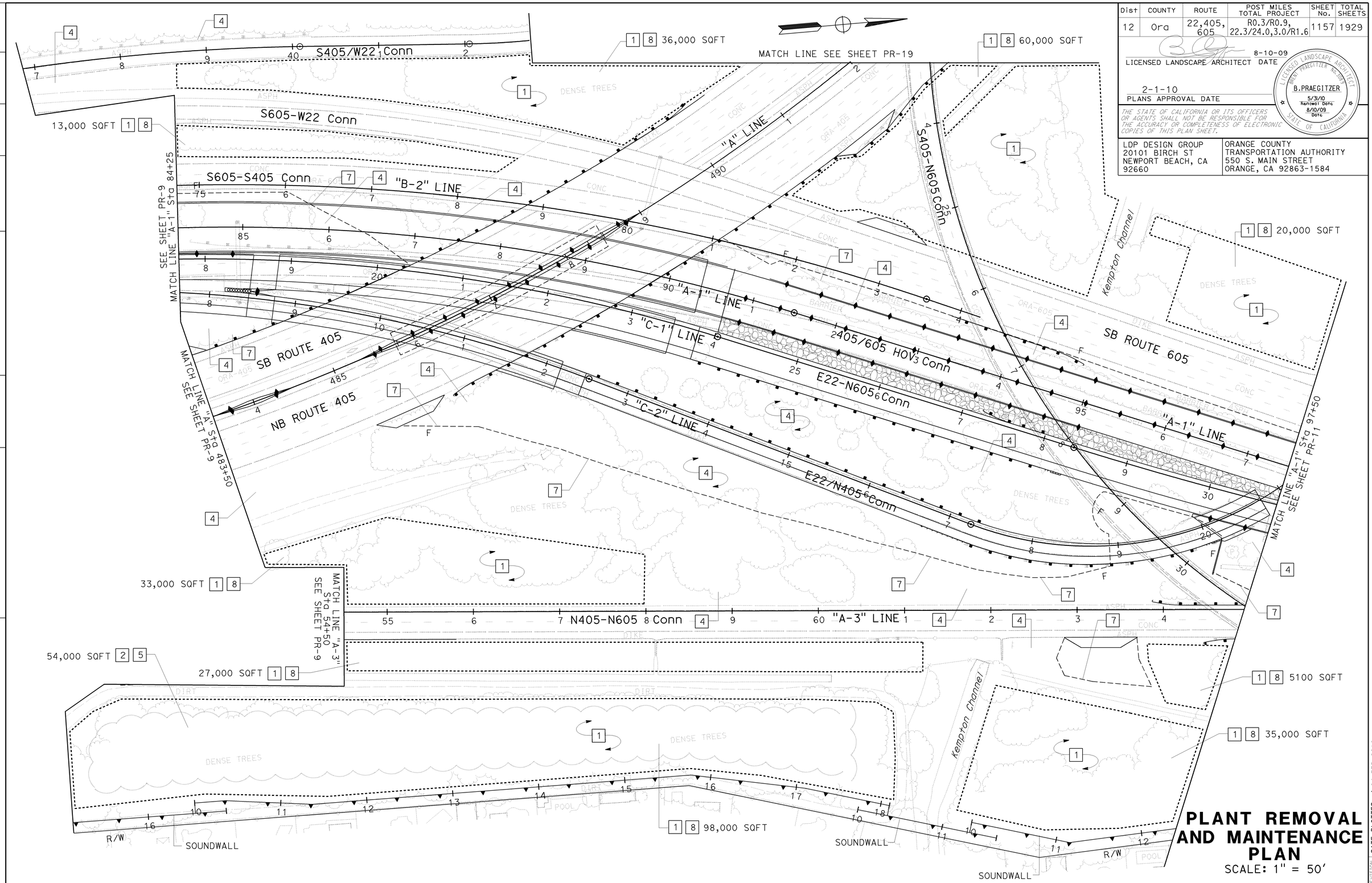

PLANT REMOVAL AND MAINTENANCE PLAN

SCALE: 1" = 50'

THIS PLAN ACCURATE FOR PLANTING WORK ONLY.

PR-10

STATE OF CALIFORNIA - DEPARTMENT OF TRANSPORTATION
Caltrans

CONSULTANT FUNCTIONAL SUPERVISOR: BRENT PRAEGITZER
CALCULATED-DESIGNED BY: CHRIS MACDONALD
CHECKED BY: BRENT PRAEGITZER
REVISED BY: BP
DATE REVISED: 8-10-09

LAST REVISION 08-10-09
DATE PLOTTED => 04-FEB-2010
TIME PLOTTED => 08:50

Dist	COUNTY	ROUTE	POST MILES TOTAL PROJECT	SHEET No.	TOTAL SHEETS
12	Ora	22,405, 605	R0.3/R0.9, 22.3/24.0,3.0/R1.6	1158	1929

8-10-09
LICENSED LANDSCAPE ARCHITECT DATE

2-1-10
PLANS APPROVAL DATE

LICENSED LANDSCAPE ARCHITECT
BRENT PRAEGITZER No.2089
B.PRAEGITZER
5/31/10
Renewal Date
8/10/09
Date
STATE OF CALIFORNIA

THE STATE OF CALIFORNIA OR ITS OFFICERS OR AGENTS SHALL NOT BE RESPONSIBLE FOR THE ACCURACY OR COMPLETENESS OF ELECTRONIC COPIES OF THIS PLAN SHEET.

LDP DESIGN GROUP
20101 BIRCH ST
NEWPORT BEACH, CA
92660

ORANGE COUNTY
TRANSPORTATION AUTHORITY
550 S. MAIN STREET
ORANGE, CA 92863-1584

NOTE: 1. FOR COMPLETE RIGHT OF WAY AND ACCURATE ACCESS DATA, SEE RIGHT OF WAY RECORD MAPS AT DISTRICT OFFICE.

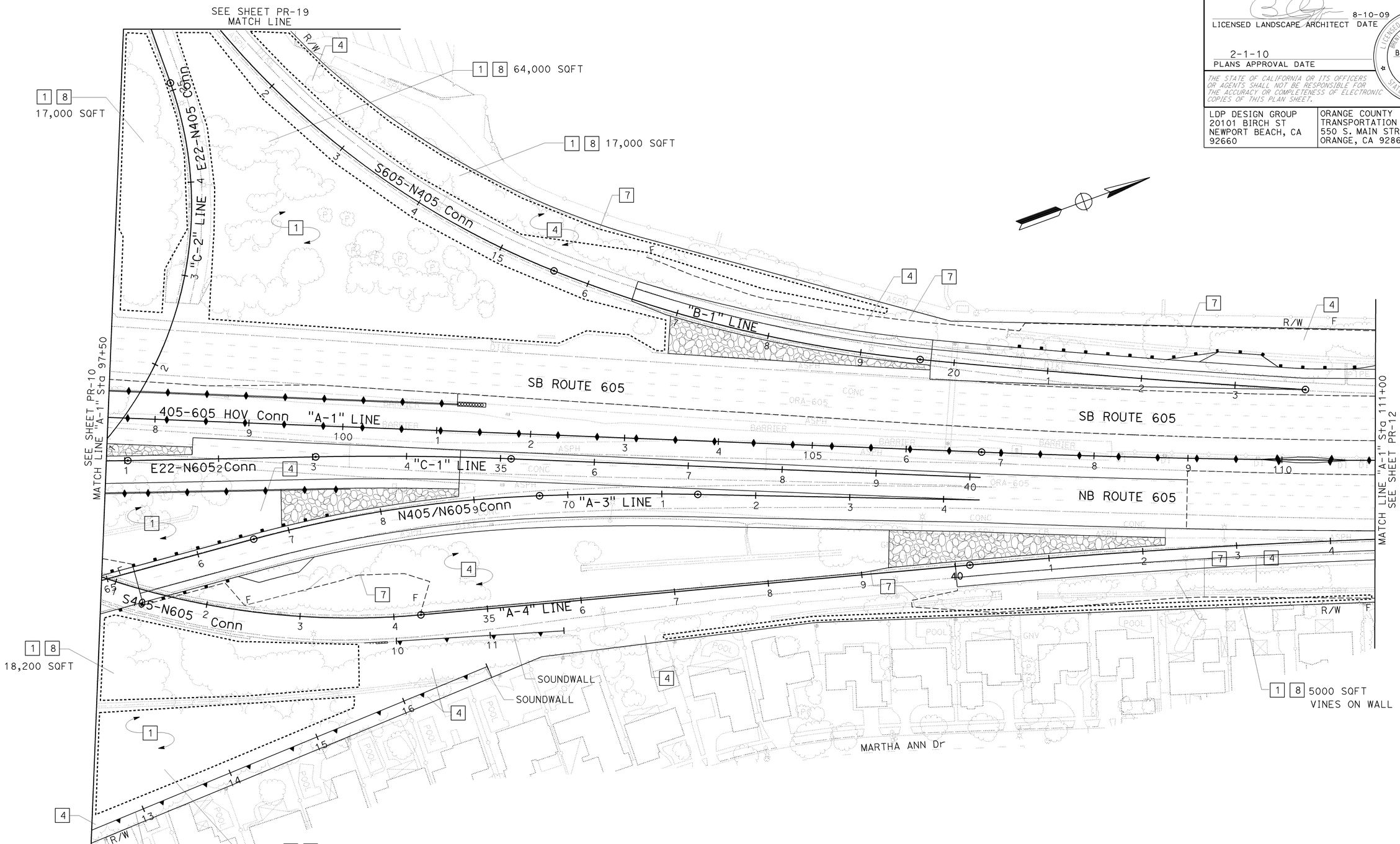

PLANT REMOVAL AND MAINTENANCE PLAN

SCALE: 1" = 50'

PR-11

THIS PLAN ACCURATE FOR PLANTING WORK ONLY.

STATE OF CALIFORNIA - DEPARTMENT OF TRANSPORTATION
Caltrans

CONSULTANT FUNCTIONAL SUPERVISOR: BRENT PRAEGITZER
CALCULATED-DESIGNED BY: CHRIS MACDONALD
CHECKED BY: BRENT PRAEGITZER
REVISED BY: BP
DATE REVISED: 8-10-09

LAST REVISION 08-10-09
DATE PLOTTED => 04-FEB-2010
TIME PLOTTED => 08:51

BORDER LAST REVISED 8/1/2008
RELATIVE BORDER SCALE IS IN INCHES 0 1 2 3
USERNAME => trmnguye
DGN FILE => c07163tf011.dgn
CU 12235
EA 071634

Dist	COUNTY	ROUTE	POST MILES TOTAL PROJECT	SHEET No.	TOTAL SHEETS
12	Ora	22,405, 605	R0.3/R0.9, 22.3/24.0,3.0/R1.6	1159	1929

LICENSED LANDSCAPE ARCHITECT DATE 8-10-09

2-1-10
PLANS APPROVAL DATE

LICENSED LANDSCAPE ARCHITECT
BRENT PRAEGITZER No.3089
B.PRAEGITZER
5/31/10
Renewal Date
8/10/09
Date
STATE OF CALIFORNIA

THE STATE OF CALIFORNIA OR ITS OFFICERS OR AGENTS SHALL NOT BE RESPONSIBLE FOR THE ACCURACY OR COMPLETENESS OF ELECTRONIC COPIES OF THIS PLAN SHEET.

LDP DESIGN GROUP
20101 BIRCH ST
NEWPORT BEACH, CA
92660

ORANGE COUNTY
TRANSPORTATION AUTHORITY
550 S. MAIN STREET
ORANGE, CA 92863-1584

NOTE:

1. FOR COMPLETE RIGHT OF WAY AND ACCURATE ACCESS DATA, SEE RIGHT OF WAY RECORD MAPS AT DISTRICT OFFICE.

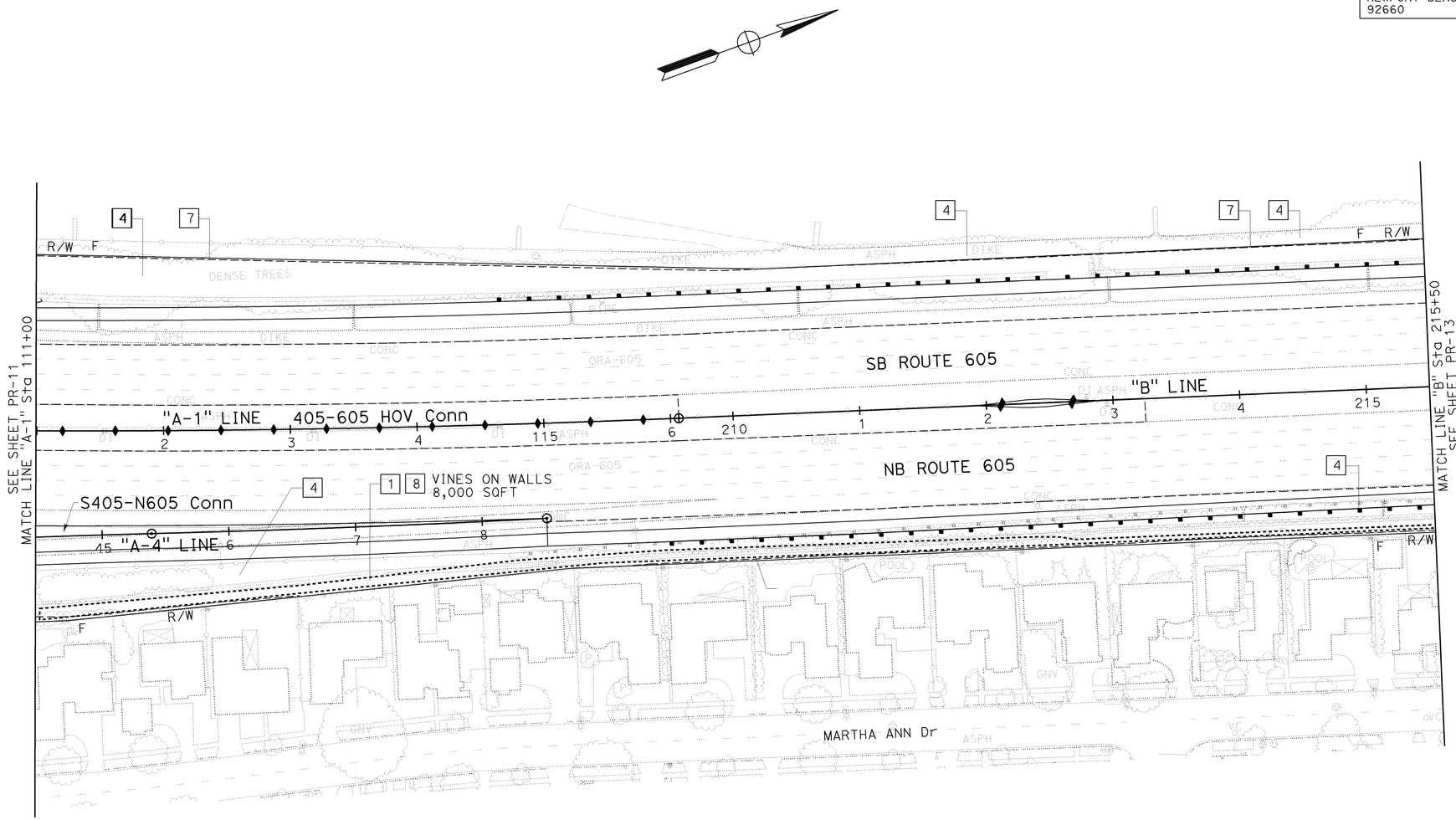

PLANT REMOVAL AND MAINTENANCE PLAN

SCALE: 1" = 50'

PR-12

THIS PLAN ACCURATE FOR PLANTING WORK ONLY.

STATE OF CALIFORNIA - DEPARTMENT OF TRANSPORTATION
Caltrans

CONSULTANT FUNCTIONAL SUPERVISOR: BRENT PRAEGITZER
CALCULATED-DESIGNED BY: CHRIS MACDONALD
CHECKED BY: BRENT PRAEGITZER
REVISED BY: BP
DATE REVISED: 8-10-09

LAST REVISION DATE PLOTTED => 04-FEB-2010
TIME PLOTTED => 08:51

Dist	COUNTY	ROUTE	POST MILES TOTAL PROJECT	SHEET No.	TOTAL SHEETS
12	Ora	22,405, 605	R0.3/R0.9, 22.3/24.0,3.0/R1.6	1160	1929

8-10-09
LICENSED LANDSCAPE ARCHITECT DATE

2-1-10
PLANS APPROVAL DATE

LICENSED LANDSCAPE ARCHITECT
BRENT PRAEGITZER No.3089
B.PRAEGITZER
5/31/10
Renewal Date
8/10/09
Date
STATE OF CALIFORNIA

THE STATE OF CALIFORNIA OR ITS OFFICERS OR AGENTS SHALL NOT BE RESPONSIBLE FOR THE ACCURACY OR COMPLETENESS OF ELECTRONIC COPIES OF THIS PLAN SHEET.

LDP DESIGN GROUP
20101 BIRCH ST
NEWPORT BEACH, CA
92660

ORANGE COUNTY
TRANSPORTATION AUTHORITY
550 S. MAIN STREET
ORANGE, CA 92863-1584

NOTE:

1. FOR COMPLETE RIGHT OF WAY AND ACCURATE ACCESS DATA, SEE RIGHT OF WAY RECORD MAPS AT DISTRICT OFFICE.

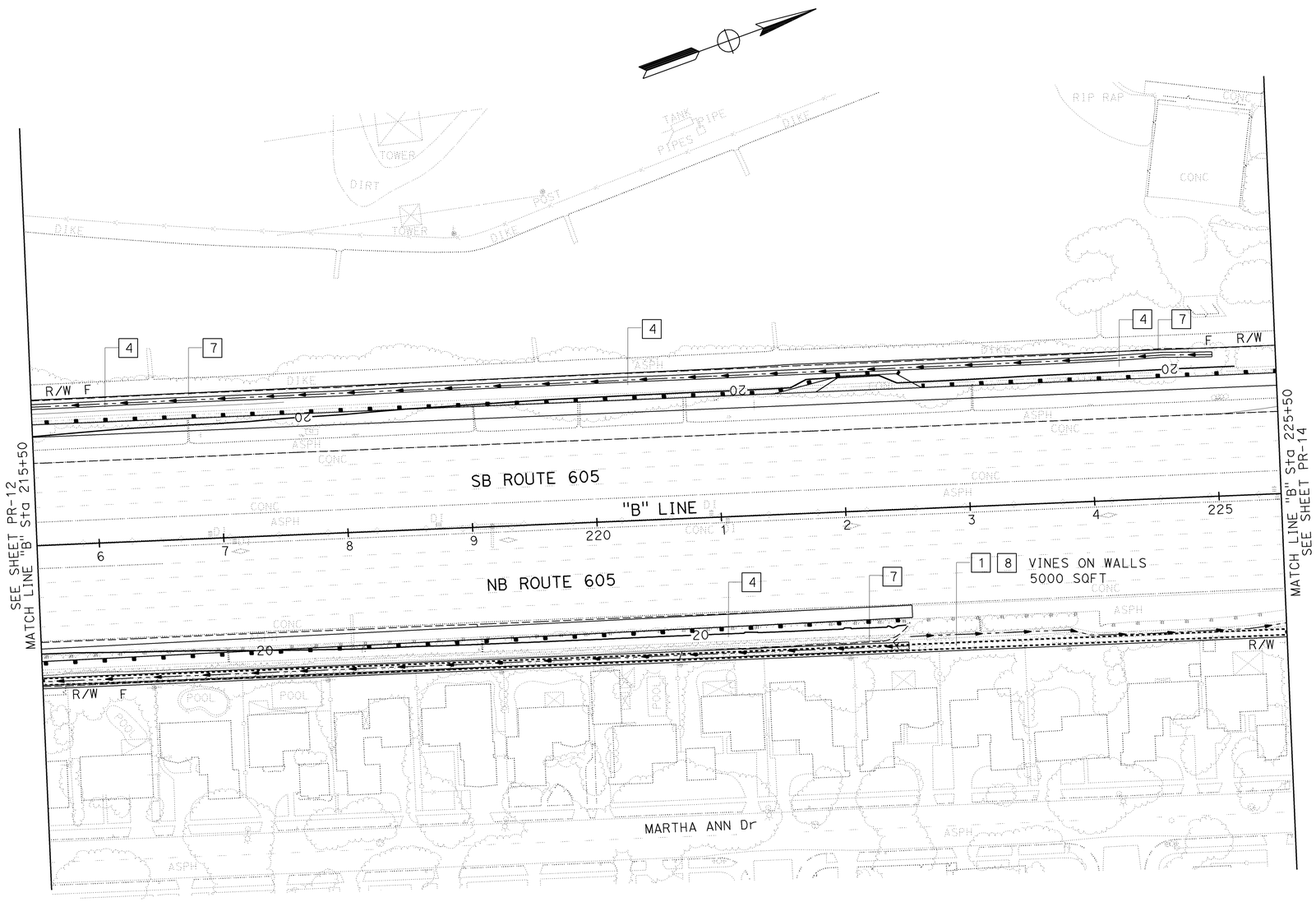

PLANT REMOVAL AND MAINTENANCE PLAN

SCALE: 1" = 50'

PR-13

THIS PLAN ACCURATE FOR PLANTING WORK ONLY.

STATE OF CALIFORNIA - DEPARTMENT OF TRANSPORTATION
Caltrans

CONSULTANT FUNCTIONAL SUPERVISOR: BRENT PRAEGITZER
CALCULATED-DESIGNED BY: CHRIS MACDONALD
CHECKED BY: BRENT PRAEGITZER
REVISED BY: BP
DATE REVISED: 8-10-09

LAST REVISION 08-10-09
DATE PLOTTED => 04-FEB-2010
TIME PLOTTED => 08:51

Dist	COUNTY	ROUTE	POST MILES TOTAL PROJECT	SHEET No.	TOTAL SHEETS
12	Ora	22,405, 605	R0.3/R0.9, 22.3/24.0,3.0/R1.6	1161	1929

8-10-09
LICENSED LANDSCAPE ARCHITECT DATE

2-1-10
PLANS APPROVAL DATE

LICENSED LANDSCAPE ARCHITECT
BRENT PRAEGITZER No.3087
B.PRAEGITZER
5/31/10
Renewal Date
8/10/09
Date
STATE OF CALIFORNIA

THE STATE OF CALIFORNIA OR ITS OFFICERS OR AGENTS SHALL NOT BE RESPONSIBLE FOR THE ACCURACY OR COMPLETENESS OF ELECTRONIC COPIES OF THIS PLAN SHEET.

LDP DESIGN GROUP
20101 BIRCH ST
NEWPORT BEACH, CA
92660

ORANGE COUNTY
TRANSPORTATION AUTHORITY
550 S. MAIN STREET
ORANGE, CA 92863-1584

NOTE:

1. FOR COMPLETE RIGHT OF WAY AND ACCURATE ACCESS DATA, SEE RIGHT OF WAY RECORD MAPS AT DISTRICT OFFICE.

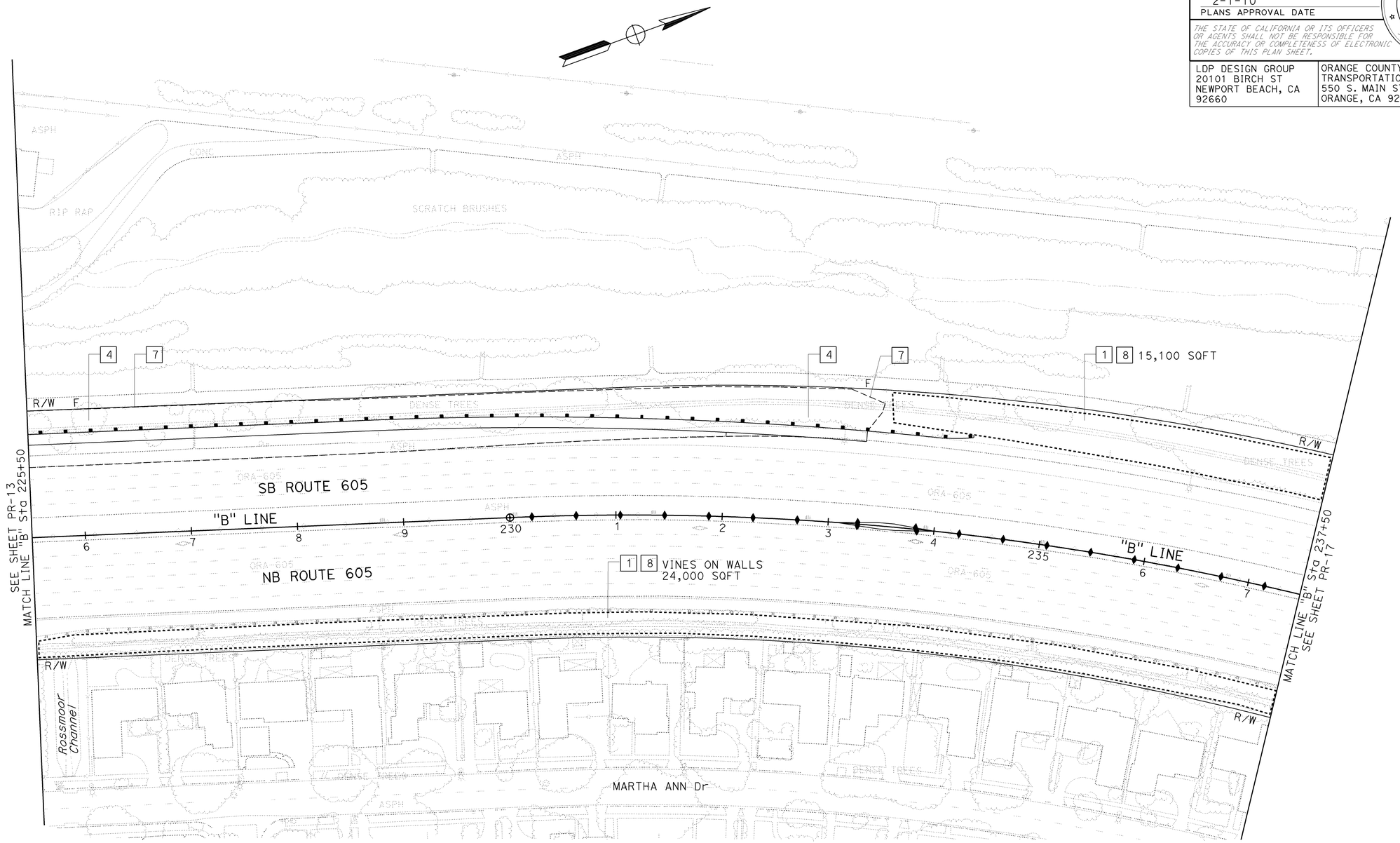

PLANT REMOVAL AND MAINTENANCE PLAN

SCALE: 1" = 50'

PR-14

THIS PLAN ACCURATE FOR PLANTING WORK ONLY.

STATE OF CALIFORNIA - DEPARTMENT OF TRANSPORTATION
Caltrans

CONSULTANT FUNCTIONAL SUPERVISOR: BRENT PRAEGITZER
CALCULATED-DESIGNED BY: CHRIS MACDONALD
CHECKED BY: BRENT PRAEGITZER
REVISED BY: BP
DATE REVISED: 8-10-09

LAST REVISION 08-10-09
DATE PLOTTED => 04-FEB-2010
TIME PLOTTED => 10:01

Dist	COUNTY	ROUTE	POST MILES TOTAL PROJECT	SHEET No.	TOTAL SHEETS
12	Ora	22,405, 605	R0.3/R0.9, 22.3/24.0,3.0/R1.6	1162	1929

LICENSED LANDSCAPE ARCHITECT DATE 8-10-09

2-1-10
PLANS APPROVAL DATE

LICENSED LANDSCAPE ARCHITECT
BRENT PRAEGITZER No.2089
B.PRAEGITZER
5/31/10
Renewal Date
8/10/09
Date
STATE OF CALIFORNIA

THE STATE OF CALIFORNIA OR ITS OFFICERS OR AGENTS SHALL NOT BE RESPONSIBLE FOR THE ACCURACY OR COMPLETENESS OF ELECTRONIC COPIES OF THIS PLAN SHEET.

LDP DESIGN GROUP
20101 BIRCH ST
NEWPORT BEACH, CA
92660

ORANGE COUNTY
TRANSPORTATION AUTHORITY
550 S. MAIN STREET
ORANGE, CA 92863-1584

NOTE:

1. FOR COMPLETE RIGHT OF WAY AND ACCURATE ACCESS DATA, SEE RIGHT OF WAY RECORD MAPS AT DISTRICT OFFICE.

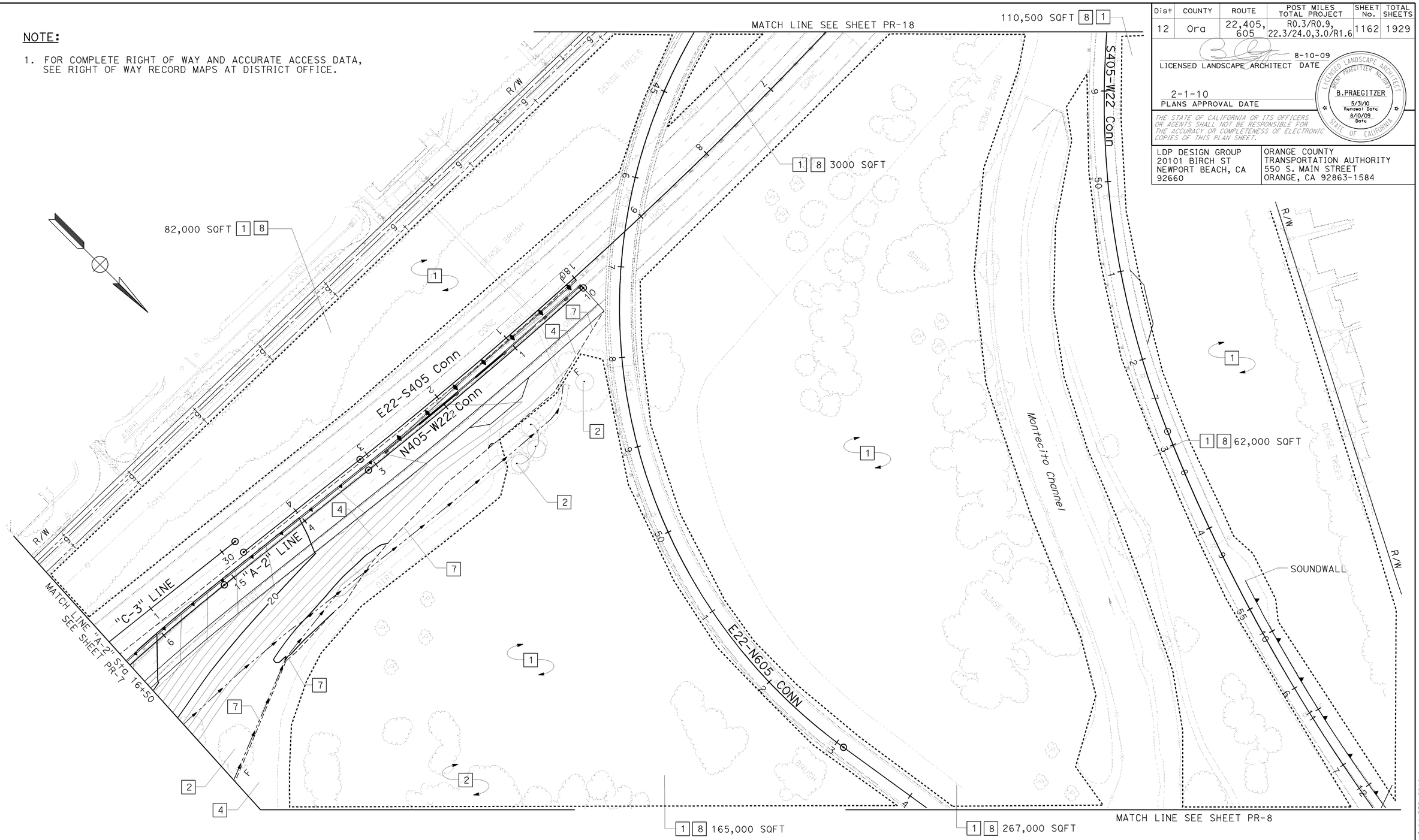

PLANT REMOVAL AND MAINTENANCE PLAN

SCALE: 1" = 50'

PR-15

THIS PLAN ACCURATE FOR PLANTING WORK ONLY.

STATE OF CALIFORNIA - DEPARTMENT OF TRANSPORTATION

Caltrans

CONSULTANT FUNCTIONAL SUPERVISOR: BRENT PRAEGITZER

CALCULATED-DESIGNED BY: CHRIS MACDONALD

CHECKED BY: BRENT PRAEGITZER

REVISED BY: BP

DATE REVISED: 8-10-09

LAST REVISION 08-10-09

DATE PLOTTED => 04-FEB-2010

TIME PLOTTED => 10:01

Dist	COUNTY	ROUTE	POST MILES TOTAL PROJECT	SHEET No.	TOTAL SHEETS
12	Ora	22,405, 605	R0.3/R0.9, 22.3/24.0,3.0/R1.6	1163	1929

8-10-09
LICENSED LANDSCAPE ARCHITECT DATE

2-1-10
PLANS APPROVAL DATE

LICENSED LANDSCAPE ARCHITECT
BRENT PRAEGITZER No.3089
B.PRAEGITZER
5/31/10
Renewal Date
8/10/09
Date
STATE OF CALIFORNIA

THE STATE OF CALIFORNIA OR ITS OFFICERS OR AGENTS SHALL NOT BE RESPONSIBLE FOR THE ACCURACY OR COMPLETENESS OF ELECTRONIC COPIES OF THIS PLAN SHEET.

LDP DESIGN GROUP
20101 BIRCH ST
NEWPORT BEACH, CA
92660

ORANGE COUNTY
TRANSPORTATION AUTHORITY
550 S. MAIN STREET
ORANGE, CA 92863-1584

NOTE:

1. FOR COMPLETE RIGHT OF WAY AND ACCURATE ACCESS DATA, SEE RIGHT OF WAY RECORD MAPS AT DISTRICT OFFICE.

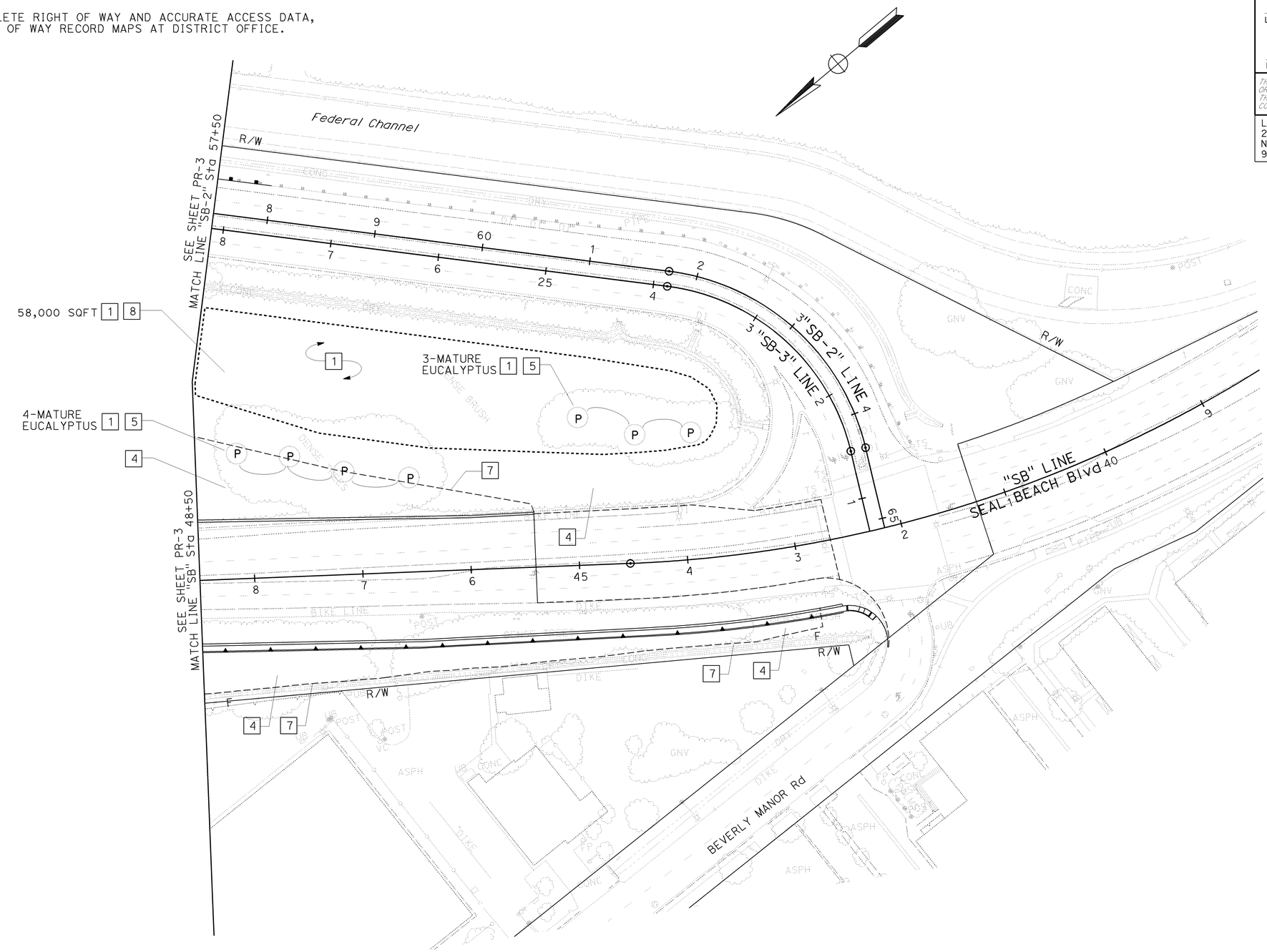

PLANT REMOVAL AND MAINTENANCE PLAN

SCALE: 1" = 50'

PR-16

THIS PLAN ACCURATE FOR PLANTING WORK ONLY.

STATE OF CALIFORNIA - DEPARTMENT OF TRANSPORTATION
Caltrans

CONSULTANT FUNCTIONAL SUPERVISOR: BRENT PRAEGITZER
CALCULATED-DESIGNED BY: CHRIS MACDONALD
CHECKED BY: BRENT PRAEGITZER
REVISED BY: BP
DATE REVISED: 8-10-09

LAST REVISION 08-10-09
DATE PLOTTED => 04-FEB-2010
TIME PLOTTED => 10:01

Dist	COUNTY	ROUTE	POST MILES TOTAL PROJECT	SHEET No.	TOTAL SHEETS
12	Ora	22,405, 605	R0.3/R0.9, 22.3/24.0,3.0/R1.6	1164	1929

8-10-09
LICENSED LANDSCAPE ARCHITECT DATE

2-1-10
PLANS APPROVAL DATE

LICENSED LANDSCAPE ARCHITECT
BRENT PRAEGITZER No.2089
B.PRAEGITZER
5/31/10
Renewal Date
8/10/09
Date
STATE OF CALIFORNIA

THE STATE OF CALIFORNIA OR ITS OFFICERS OR AGENTS SHALL NOT BE RESPONSIBLE FOR THE ACCURACY OR COMPLETENESS OF ELECTRONIC COPIES OF THIS PLAN SHEET.

LDP DESIGN GROUP
20101 BIRCH ST
NEWPORT BEACH, CA
92660

ORANGE COUNTY
TRANSPORTATION AUTHORITY
550 S. MAIN STREET
ORANGE, CA 92863-1584

NOTE:

1. FOR COMPLETE RIGHT OF WAY AND ACCURATE ACCESS DATA, SEE RIGHT OF WAY RECORD MAPS AT DISTRICT OFFICE.

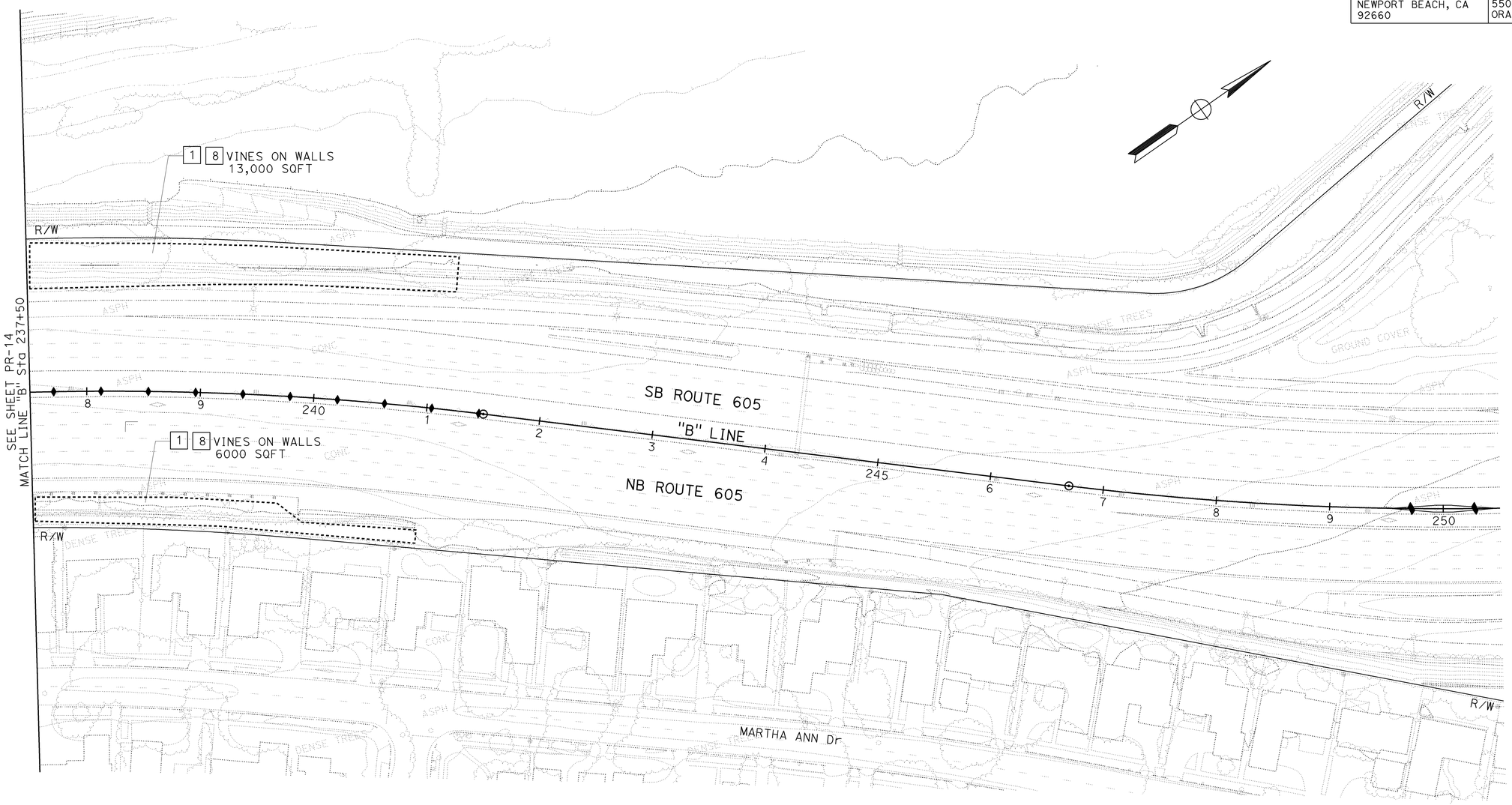

PLANT REMOVAL AND MAINTENANCE PLAN

SCALE: 1" = 50'

PR-17

THIS PLAN ACCURATE FOR PLANTING WORK ONLY.

STATE OF CALIFORNIA - DEPARTMENT OF TRANSPORTATION
Caltrans

CONSULTANT FUNCTIONAL SUPERVISOR: BRENT PRAEGITZER
CALCULATED-DESIGNED BY: BRENT PRAEGITZER
CHECKED BY: CHRIS MACDONALD
REVISED BY: BP
DATE REVISED: 8-10-09

LAST REVISION 08-10-09
DATE PLOTTED => 04-FEB-2010
TIME PLOTTED => 10:02

Dist	COUNTY	ROUTE	POST MILES TOTAL PROJECT	SHEET No.	TOTAL SHEETS
12	Ora	22,405, 605	R0.3/R0.9, 22.3/24.0,3.0/R1.6	1165	1929

8-10-09
LICENSED LANDSCAPE ARCHITECT DATE

2-1-10
PLANS APPROVAL DATE

LICENSED LANDSCAPE ARCHITECT
BRENT PRAEGITZER No.2089
B.PRAEGITZER
5/31/10
Renewal Date
8/10/09
Date
STATE OF CALIFORNIA

THE STATE OF CALIFORNIA OR ITS OFFICERS OR AGENTS SHALL NOT BE RESPONSIBLE FOR THE ACCURACY OR COMPLETENESS OF ELECTRONIC COPIES OF THIS PLAN SHEET.

LDP DESIGN GROUP
20101 BIRCH ST
NEWPORT BEACH, CA
92660

ORANGE COUNTY
TRANSPORTATION AUTHORITY
550 S. MAIN STREET
ORANGE, CA 92863-1584

NOTE:

1. FOR COMPLETE RIGHT OF WAY AND ACCURATE ACCESS DATA, SEE RIGHT OF WAY RECORD MAPS AT DISTRICT OFFICE.

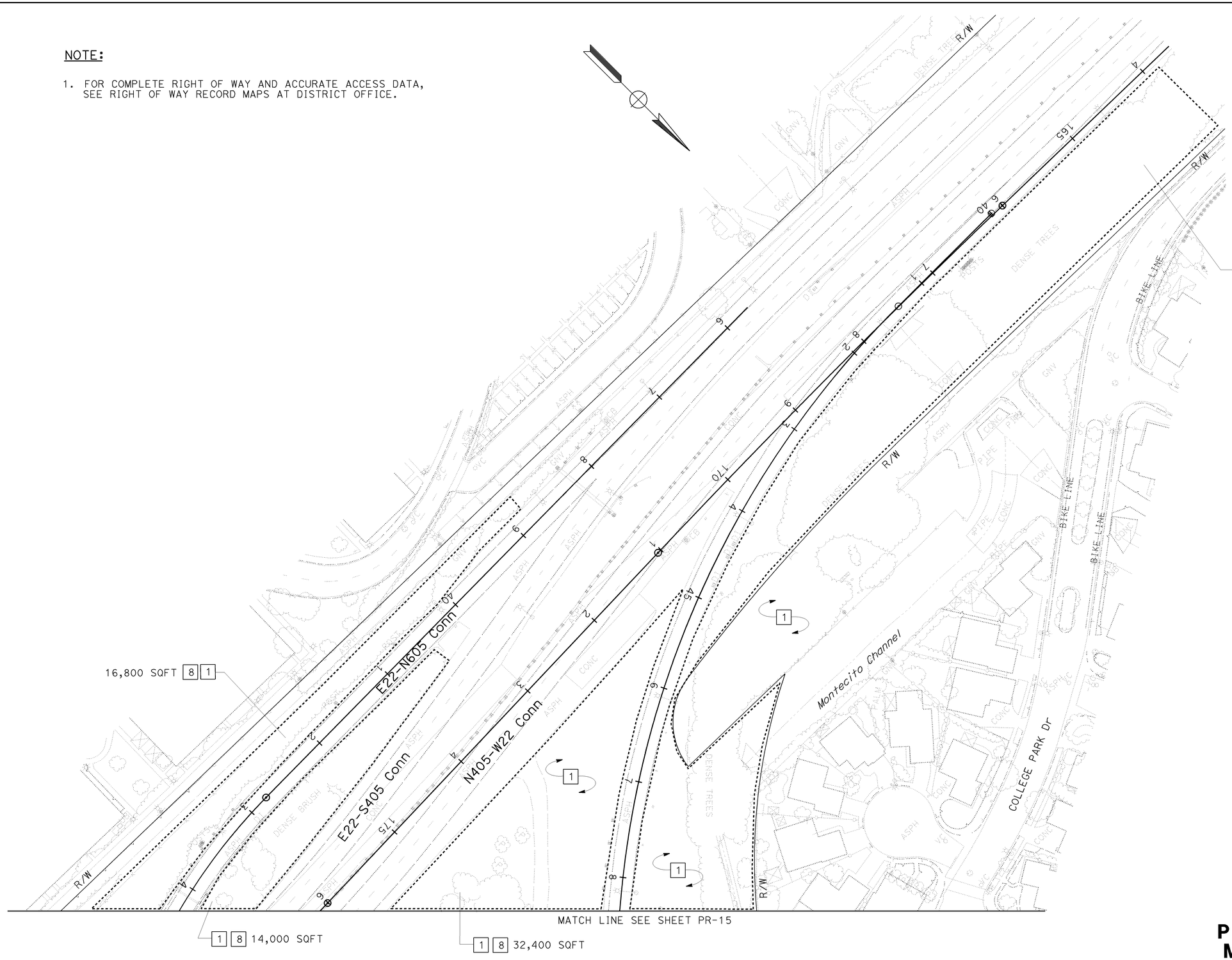

PLANT REMOVAL AND MAINTENANCE PLAN

SCALE: 1" = 50'

PR-18

THIS PLAN ACCURATE FOR PLANTING WORK ONLY.

STATE OF CALIFORNIA - DEPARTMENT OF TRANSPORTATION
Caltrans

CONSULTANT FUNCTIONAL SUPERVISOR: BRENT PRAEGITZER
CALCULATED-DESIGNED BY: CHRIS MACDONALD
CHECKED BY: BRENT PRAEGITZER
REVISED BY: BP
DATE REVISED: 8-10-09

LAST REVISION 08-10-09
DATE PLOTTED => 04-FEB-2010
TIME PLOTTED => 10:02

Dist	COUNTY	ROUTE	POST MILES TOTAL PROJECT	SHEET No.	TOTAL SHEETS
12	Ora	22,405, 605	R0.3/R0.9, 22.3/24.0,3.0/R1.6	1166	1929

8-10-09
LICENSED LANDSCAPE ARCHITECT DATE

2-1-10
PLANS APPROVAL DATE

LICENSED LANDSCAPE ARCHITECT
BRENT PRAEGITZER No.2089
B.PRAEGITZER
5/31/10
Renewal Date
8/10/09
Date
STATE OF CALIFORNIA

THE STATE OF CALIFORNIA OR ITS OFFICERS OR AGENTS SHALL NOT BE RESPONSIBLE FOR THE ACCURACY OR COMPLETENESS OF ELECTRONIC COPIES OF THIS PLAN SHEET.

LDP DESIGN GROUP
20101 BIRCH ST
NEWPORT BEACH, CA
92660

ORANGE COUNTY
TRANSPORTATION AUTHORITY
550 S. MAIN STREET
ORANGE, CA 92863-1584

NOTE:

1. FOR COMPLETE RIGHT OF WAY AND ACCURATE ACCESS DATA, SEE RIGHT OF WAY RECORD MAPS AT DISTRICT OFFICE.

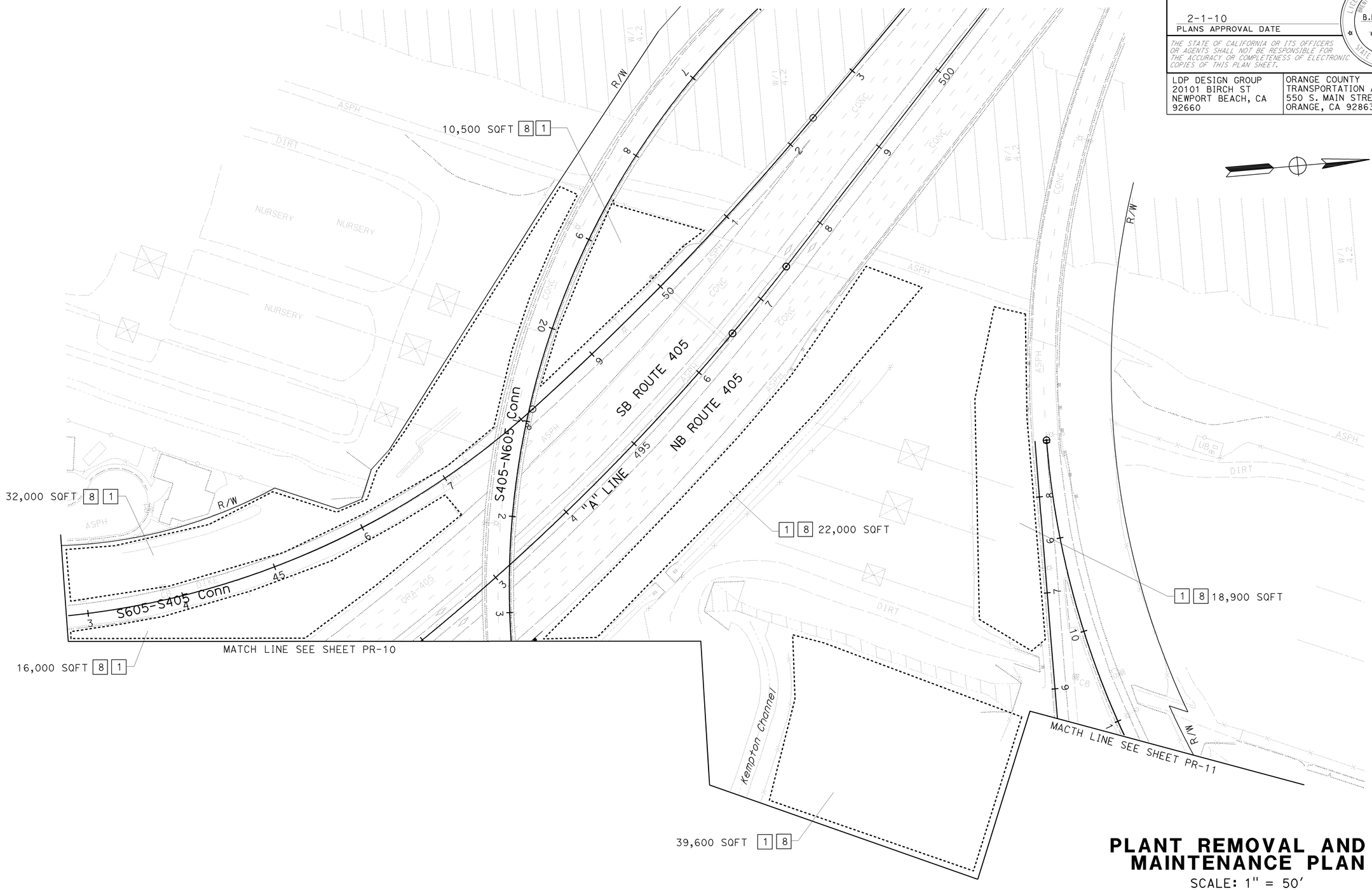

PLANT REMOVAL AND MAINTENANCE PLAN

SCALE: 1" = 50'

PR-19

THIS PLAN ACCURATE FOR PLANTING WORK ONLY.

STATE OF CALIFORNIA - DEPARTMENT OF TRANSPORTATION
Caltrans

CONSULTANT FUNCTIONAL SUPERVISOR: BRENT PRAEGITZER
CALCULATED-DESIGNED BY: CHRIS MACDONALD
CHECKED BY: BRENT PRAEGITZER
REVISED BY: BP
DATE REVISED: 8-10-09

LAST REVISION 08-10-09 | DATE PLOTTED => 04-FEB-2010 | TIME PLOTTED => 10:02

Dist	COUNTY	ROUTE	POST MILES TOTAL PROJECT	SHEET No.	TOTAL SHEETS
12	Ora	22,405, 605	R0.3/R0.9, 22.3/24.0,3.0/R1.6	1167	1929

LICENSED LANDSCAPE ARCHITECT 8-10-09 DATE

2-1-10
PLANS APPROVAL DATE

LICENSED LANDSCAPE ARCHITECT
BRENT PRAEGITZER No.3089
B.PRAEGITZER
5/31/10 Renewal Date
8/10/09 Date
STATE OF CALIFORNIA

THE STATE OF CALIFORNIA OR ITS OFFICERS OR AGENTS SHALL NOT BE RESPONSIBLE FOR THE ACCURACY OR COMPLETENESS OF ELECTRONIC COPIES OF THIS PLAN SHEET.

LDP DESIGN GROUP
20101 BIRCH ST
NEWPORT BEACH, CA
92660

ORANGE COUNTY
TRANSPORTATION AUTHORITY
550 S. MAIN STREET
ORANGE, CA 92863-1584

NOTE:

1. FOR COMPLETE RIGHT OF WAY AND ACCURATE ACCESS DATA, SEE RIGHT OF WAY RECORD MAPS AT DISTRICT OFFICE.

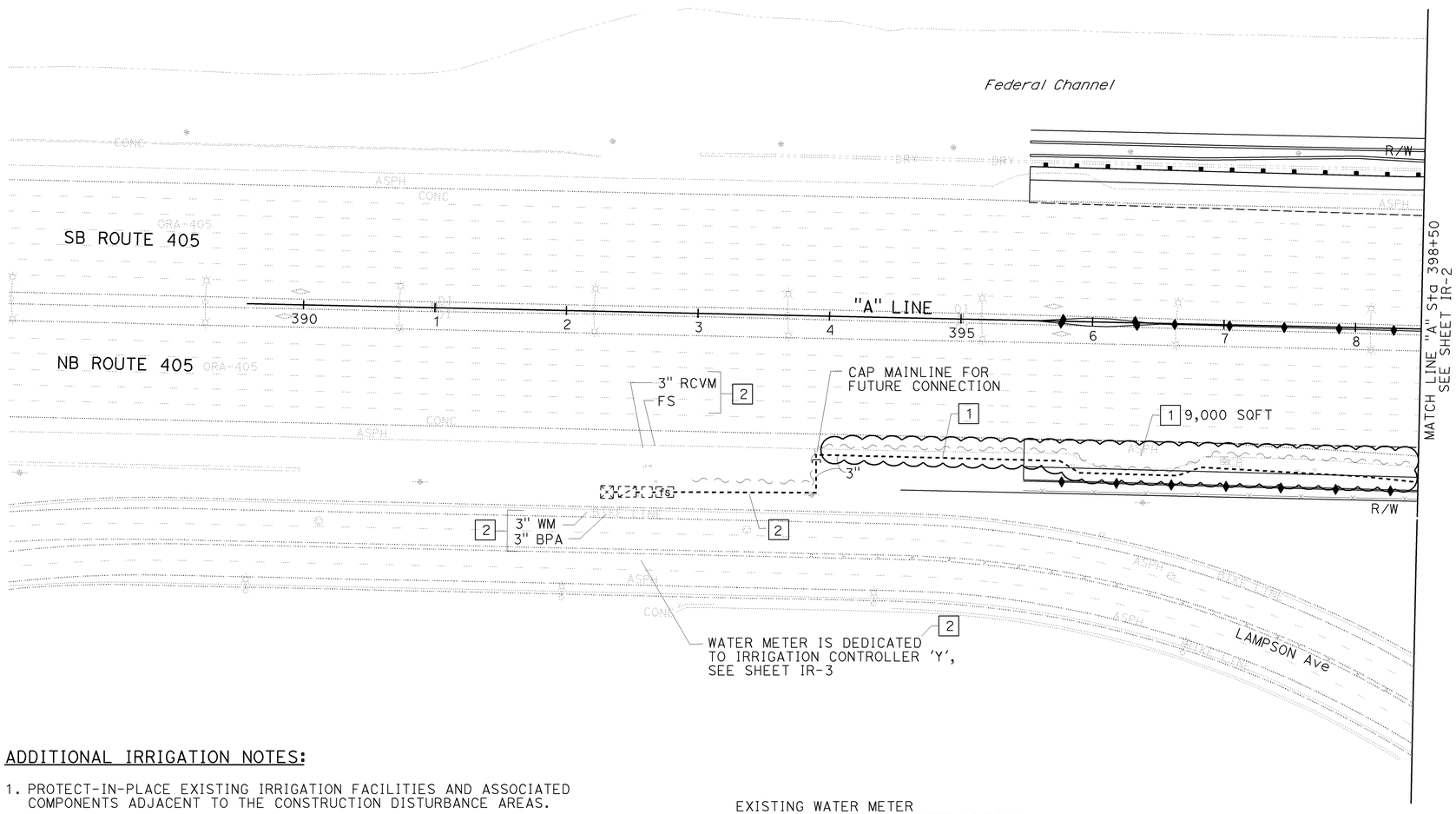

IRRIGATION NOTES:

1. REMOVE EXISTING IRRIGATION FACILITIES
2. MAINTAIN EXISTING IRRIGATION FACILITIES
3. ABANDON EXISTING IRRIGATION MAINLINE
4. RELOCATE EXISTING IRRIGATION FACILITIES

LEGEND:

- REMOVE IRRIGATION FACILITIES AREA
- Exist WATER METER
- Exist BACKFLOW PREVENTER ASSEMBLY
- Exist REMOTE CONTROL VALVE
- Exist FLOW SENSOR
- Exist GATE VALVE
- Exist SPRINKLER
- Exist VINE SPRINKLER
- Exist PLASTIC PIPE MAINLINE
- Exist PLASTIC PIPE LATERAL
- Exist CNC (FOLLOWS MAINLINE WHERE NO SYMBOL IS SHOWN)
- Exist IRRIGATION CROSSOVER

EXISTING RCV CODE

2½"-A-2- 500 -60

- RCV SIZE (INCH)
- IRRIGATION CONTROLLER
- CONTROLLER STATION
- GALLONS PER MINUTE
- QUANTITY OF SPRINKLERS (WHEN SHOWN)
- VALVE CODES FOR EXISTING VALVES ARE SHOWN IN A DASHED ENCLOSURE

ADDITIONAL IRRIGATION NOTES:

1. PROTECT-IN-PLACE EXISTING IRRIGATION FACILITIES AND ASSOCIATED COMPONENTS ADJACENT TO THE CONSTRUCTION DISTURBANCE AREAS.
2. PROVIDE TEMPORARY IRRIGATION TO EXISTING PLANTING AREAS AS NEEDED DURING ROADWAY CONSTRUCTION PHASE OF WORK.
3. COORDINATE THE REMOVAL, SHUT DOWN, OR EXTENSION OF THE EXISTING IRRIGATION MAINLINE WITH THE PROJECT ENGINEER TO AVOID IMPACTS TO AREAS OUTSIDE THE CONSTRUCTION DISTURBANCE ZONE.
4. ADJUST EXISTING SPRAY ROTORS AS NEEDED TO AVOID OVERSPRAY ONTO CONSTRUCTION AREAS OR PAVED SURFACES.
5. POTABLE WATER IS USED FOR ALL IRRIGATION SYSTEMS SHOWN ON THIS PLAN.

EXISTING WATER METER
CITY OF SEAL BEACH WATER DIVISION
ACCOUNT No: 00070400

STATIC PRESSURE @ P.O.C.	65-75 PSI
MINIMUM PRESSURE REQUIRED	70 PSI
MAXIMUM FLOW REQUIRED	50 GPM
MINIMUM FLOW	20 GPM
AREA IRRIGATED	14 AC

ALL IRRIGATION EQUIPMENT SIZES ARE SHOWN IN INCHES (DIAMETER NOMINAL) UNLESS OTHERWISE NOTED.

IRRIGATION REMOVAL PLAN

SCALE: 1" = 50'

IR-1

CHRIS MACDONALD	BRENT PRAEGITZER
CALCULATED-DESIGNED BY	CHECKED BY
CONSULTANT FUNCTIONAL SUPERVISOR	BRENT PRAEGITZER
REVISED BY	BP
DATE REVISED	8-10-09

STATE OF CALIFORNIA - DEPARTMENT OF TRANSPORTATION
Caltrans

LAST REVISION 08-10-09 | DATE PLOTTED => 04-FEB-2010 | TIME PLOTTED => 10:02

Dist	COUNTY	ROUTE	POST MILES TOTAL PROJECT	SHEET No.	TOTAL SHEETS
12	Ora	22,405, 605	R0.3/R0.9, 22.3/24.0,3.0/R1.6	1168	1929

8-10-09
LICENSED LANDSCAPE ARCHITECT DATE

2-1-10
PLANS APPROVAL DATE

LICENSED LANDSCAPE ARCHITECT
BRENT PRAEGITZER No.3089
B.PRAEGITZER
5/31/10
Renewal Date
8/10/09
Date
STATE OF CALIFORNIA

THE STATE OF CALIFORNIA OR ITS OFFICERS OR AGENTS SHALL NOT BE RESPONSIBLE FOR THE ACCURACY OR COMPLETENESS OF ELECTRONIC COPIES OF THIS PLAN SHEET.

LDP DESIGN GROUP
20101 BIRCH ST
NEWPORT BEACH, CA
92660

ORANGE COUNTY
TRANSPORTATION AUTHORITY
550 S. MAIN STREET
ORANGE, CA 92863-1584

NOTE:

1. FOR COMPLETE RIGHT OF WAY AND ACCURATE ACCESS DATA, SEE RIGHT OF WAY RECORD MAPS AT DISTRICT OFFICE.

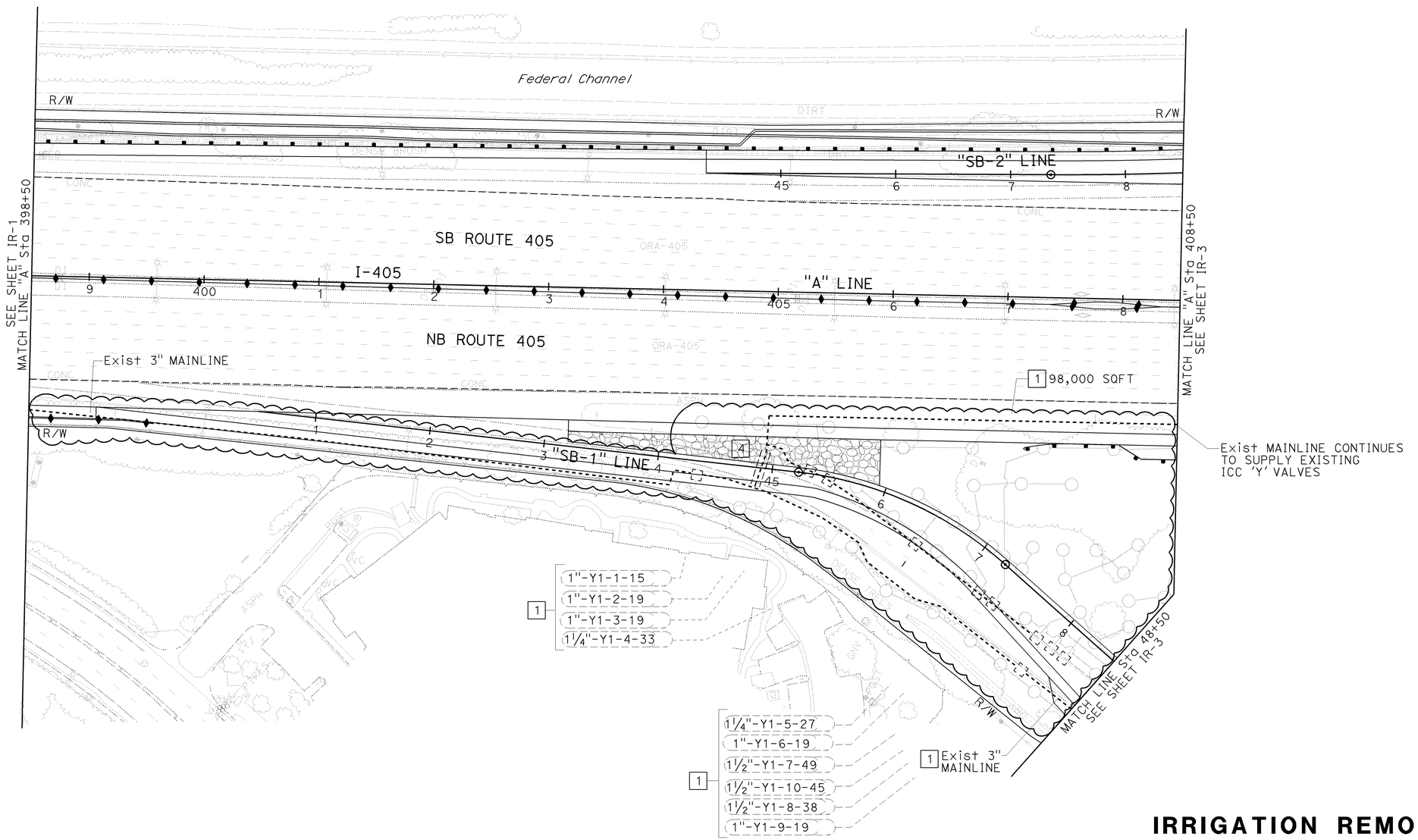

IRRIGATION REMOVAL PLAN

SCALE: 1" = 50'

IR-2

ALL IRRIGATION EQUIPMENT SIZES ARE SHOWN IN INCHES (DIAMETER NOMINAL) UNLESS OTHERWISE NOTED.

REVISED BY	DATE REVISED
BP	8-10-09

CHRIS MACDONALD — CALCULATED-DESIGNED BY
BRENT PRAEGITZER — CHECKED BY
CONSULTANT FUNCTIONAL SUPERVISOR: BRENT PRAEGITZER
STATE OF CALIFORNIA - DEPARTMENT OF TRANSPORTATION
Caltrans

LAST REVISION 08-10-09 | DATE PLOTTED => 04-FEB-2010 | TIME PLOTTED => 10:02

Dist	COUNTY	ROUTE	POST MILES TOTAL PROJECT	SHEET No.	TOTAL SHEETS
12	Ora	22,405, 605	R0.3/R0.9, 22.3/24.0,3.0/R1.6	1169	1929

8-10-09
LICENSED LANDSCAPE ARCHITECT DATE

2-1-10
PLANS APPROVAL DATE

LICENSED LANDSCAPE ARCHITECT
BRENT PRAEGITZER No.2089
B.PRAEGITZER
5/31/10 Renewal Date
8/10/09 Date
STATE OF CALIFORNIA

THE STATE OF CALIFORNIA OR ITS OFFICERS OR AGENTS SHALL NOT BE RESPONSIBLE FOR THE ACCURACY OR COMPLETENESS OF ELECTRONIC COPIES OF THIS PLAN SHEET.

LDP DESIGN GROUP
20101 BIRCH ST
NEWPORT BEACH, CA
92660

ORANGE COUNTY
TRANSPORTATION AUTHORITY
550 S. MAIN STREET
ORANGE, CA 92863-1584

NOTE:

1. FOR COMPLETE RIGHT OF WAY AND ACCURATE ACCESS DATA, SEE RIGHT OF WAY RECORD MAPS AT DISTRICT OFFICE.

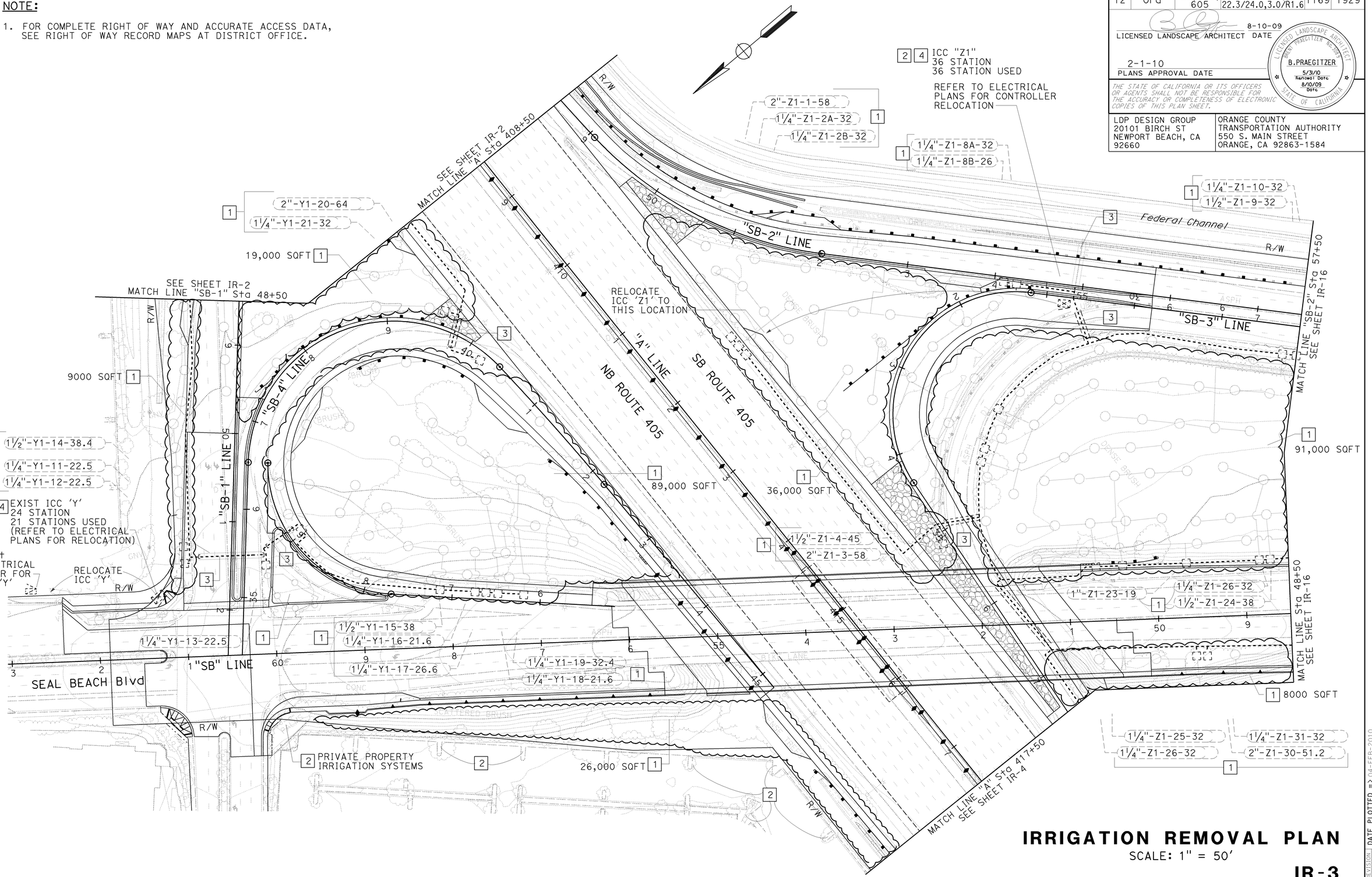

IRRIGATION REMOVAL PLAN

SCALE: 1" = 50'

IR-3

ALL IRRIGATION EQUIPMENT SIZES ARE SHOWN IN INCHES (DIAMETER NOMINAL) UNLESS OTHERWISE NOTED.

CHRIS MACDONALD	BP	8-10-09	
BRENT PRAEGITZER	REVISED BY	DATE REVISED	

CALCULATED-DESIGNED BY
CHECKED BY
CONSULTANT FUNCTIONAL SUPERVISOR
BRENT PRAEGITZER

STATE OF CALIFORNIA - DEPARTMENT OF TRANSPORTATION
Caltrans

LAST REVISION 08-10-09
DATE PLOTTED => 04-FEB-2010
TIME PLOTTED => 10:02

Dist	COUNTY	ROUTE	POST MILES TOTAL PROJECT	SHEET No.	TOTAL SHEETS
12	Ora	22,405, 605	R0.3/R0.9, 22.3/24.0,3.0/R1.6	1170	1929

LICENSED LANDSCAPE ARCHITECT 8-10-09 DATE

2-1-10
PLANS APPROVAL DATE

LICENSED LANDSCAPE ARCHITECT
BRENT PRAEGITZER No.3089
B.PRAEGITZER
5/31/10
Renewal Date
8/10/09
Date
STATE OF CALIFORNIA

THE STATE OF CALIFORNIA OR ITS OFFICERS OR AGENTS SHALL NOT BE RESPONSIBLE FOR THE ACCURACY OR COMPLETENESS OF ELECTRONIC COPIES OF THIS PLAN SHEET.

LDP DESIGN GROUP
20101 BIRCH ST
NEWPORT BEACH, CA
92660

ORANGE COUNTY
TRANSPORTATION AUTHORITY
550 S. MAIN STREET
ORANGE, CA 92863-1584

NOTE:

1. FOR COMPLETE RIGHT OF WAY AND ACCURATE ACCESS DATA, SEE RIGHT OF WAY RECORD MAPS AT DISTRICT OFFICE.

EXISTING 3" WATER METER
CITY OF SEAL BEACH - WATER DIVISION
ACCOUNT NO: 00070300

STATIC PRESSURE @ P.O.C.	65-80 PSI
MINIMUM PRESSURE REQUIRED	75 PSI
MAXIMUM FLOW REQUIRED	50 GPM
MINIMUM FLOW	20 GPM
AREA IRRIGATED	10.2 AC

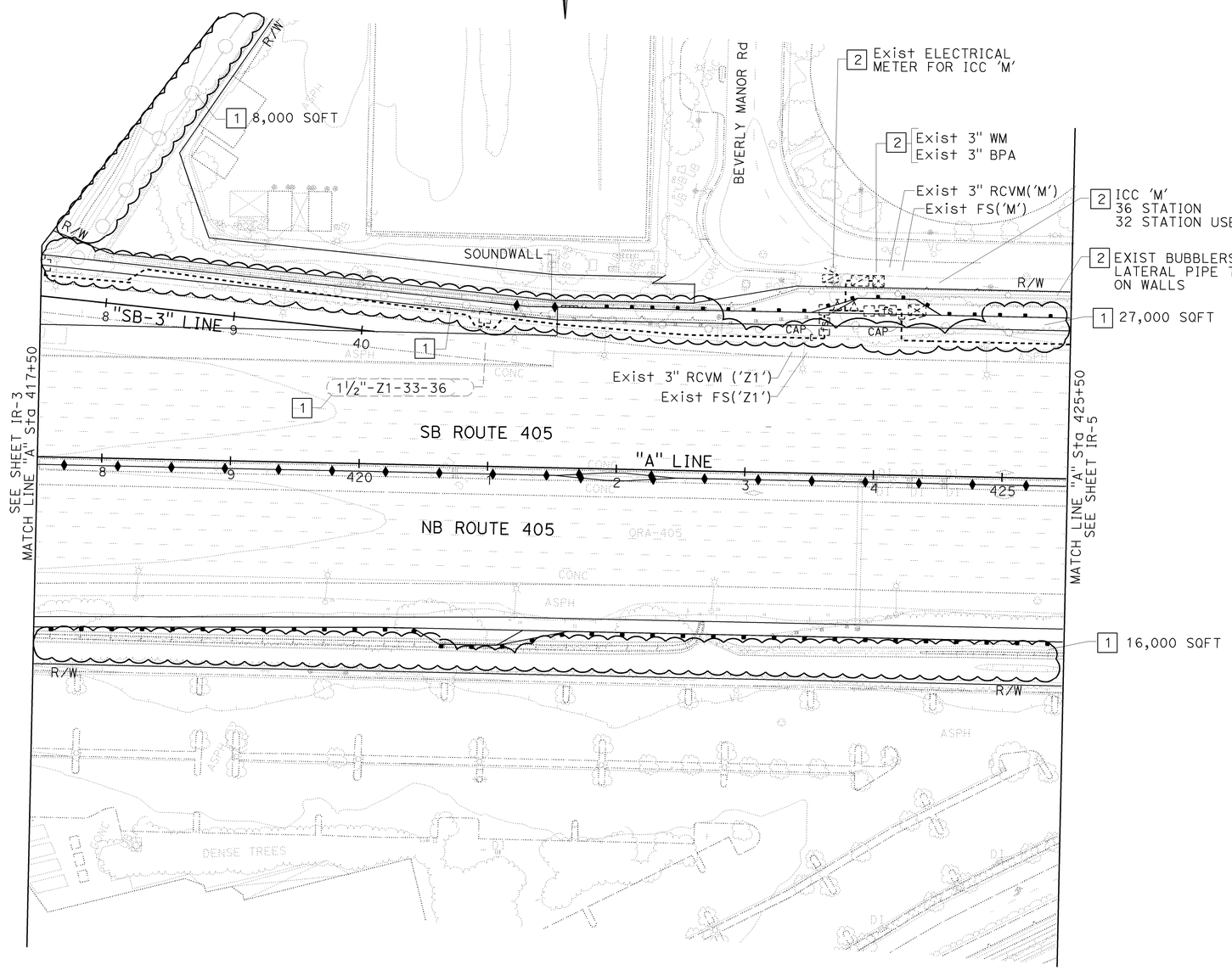

IRRIGATION REMOVAL PLAN

SCALE: 1" = 50'

IR-4

ALL IRRIGATION EQUIPMENT SIZES ARE SHOWN IN INCHES (DIAMETER NOMINAL) UNLESS OTHERWISE NOTED.

STATE OF CALIFORNIA - DEPARTMENT OF TRANSPORTATION
Caltrans

CONSULTANT FUNCTIONAL SUPERVISOR: BRENT PRAEGITZER
CALCULATED-DESIGNED BY: CHRIS MACDONALD
CHECKED BY: BRENT PRAEGITZER
REVISED BY: BP
DATE REVISED: 8-10-09

LAST REVISION 08-10-09
DATE PLOTTED => 04-FEB-2010
TIME PLOTTED => 10:02

Dist	COUNTY	ROUTE	POST MILES TOTAL PROJECT	SHEET No.	TOTAL SHEETS
12	Ora	22,405, 605	R0.3/R0.9, 22.3/24.0,3.0/R1.6	1171	1929

8-10-09
LICENSED LANDSCAPE ARCHITECT DATE

2-1-10
PLANS APPROVAL DATE

LICENSED LANDSCAPE ARCHITECT
BRENT PRAEGITZER No.2089
B.PRAEGITZER
5/31/10
Renewal Date
8/10/09
Date
STATE OF CALIFORNIA

THE STATE OF CALIFORNIA OR ITS OFFICERS OR AGENTS SHALL NOT BE RESPONSIBLE FOR THE ACCURACY OR COMPLETENESS OF ELECTRONIC COPIES OF THIS PLAN SHEET.

LDP DESIGN GROUP
20101 BIRCH ST
NEWPORT BEACH, CA
92660

ORANGE COUNTY
TRANSPORTATION AUTHORITY
550 S. MAIN STREET
ORANGE, CA 92863-1584

NOTE:

1. FOR COMPLETE RIGHT OF WAY AND ACCURATE ACCESS DATA, SEE RIGHT OF WAY RECORD MAPS AT DISTRICT OFFICE.

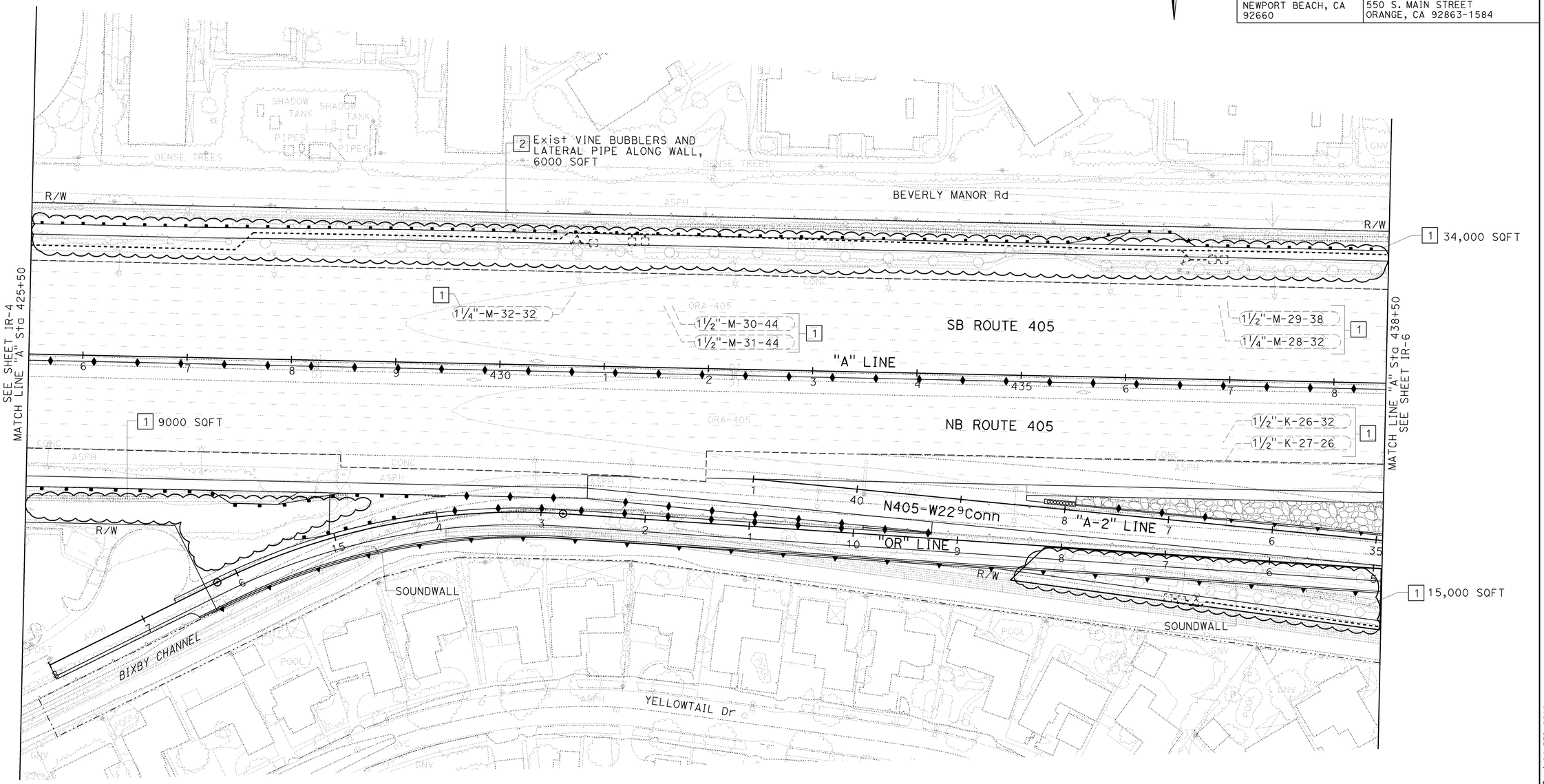

IRRIGATION REMOVAL PLAN

SCALE: 1" = 50'

IR-5

ALL IRRIGATION EQUIPMENT SIZES ARE SHOWN IN INCHES (DIAMETER NOMINAL) UNLESS OTHERWISE NOTED.

CHRIS MACDONALD	BP	CALCULATED-DESIGNED BY	CONSULTANT FUNCTIONAL SUPERVISOR
BRENT PRAEGITZER	8-10-09	CHECKED BY	BRENT PRAEGITZER
REVISED BY			
DATE REVISED			

STATE OF CALIFORNIA - DEPARTMENT OF TRANSPORTATION
Caltrans

LAST REVISION 08-10-09 DATE PLOTTED => 04-FEB-2010 TIME PLOTTED => 10:02

Dist	COUNTY	ROUTE	POST MILES TOTAL PROJECT	SHEET No.	TOTAL SHEETS
12	Ora	22,405, 605	R0.3/R0.9, 22.3/24.0,3.0/R1.6	1172	1929

8-10-09
LICENSED LANDSCAPE ARCHITECT DATE

2-1-10
PLANS APPROVAL DATE

LICENSED LANDSCAPE ARCHITECT
BRENT PRAEGITZER No.3087
B.PRAEGITZER
5/31/10 Renewal Date
8/10/09 Date
STATE OF CALIFORNIA

THE STATE OF CALIFORNIA OR ITS OFFICERS OR AGENTS SHALL NOT BE RESPONSIBLE FOR THE ACCURACY OR COMPLETENESS OF ELECTRONIC COPIES OF THIS PLAN SHEET.

LDP DESIGN GROUP
20101 BIRCH ST
NEWPORT BEACH, CA
92660

ORANGE COUNTY
TRANSPORTATION AUTHORITY
550 S. MAIN STREET
ORANGE, CA 92863-1584

NOTE:

1. FOR COMPLETE RIGHT OF WAY AND ACCURATE ACCESS DATA, SEE RIGHT OF WAY RECORD MAPS AT DISTRICT OFFICE.

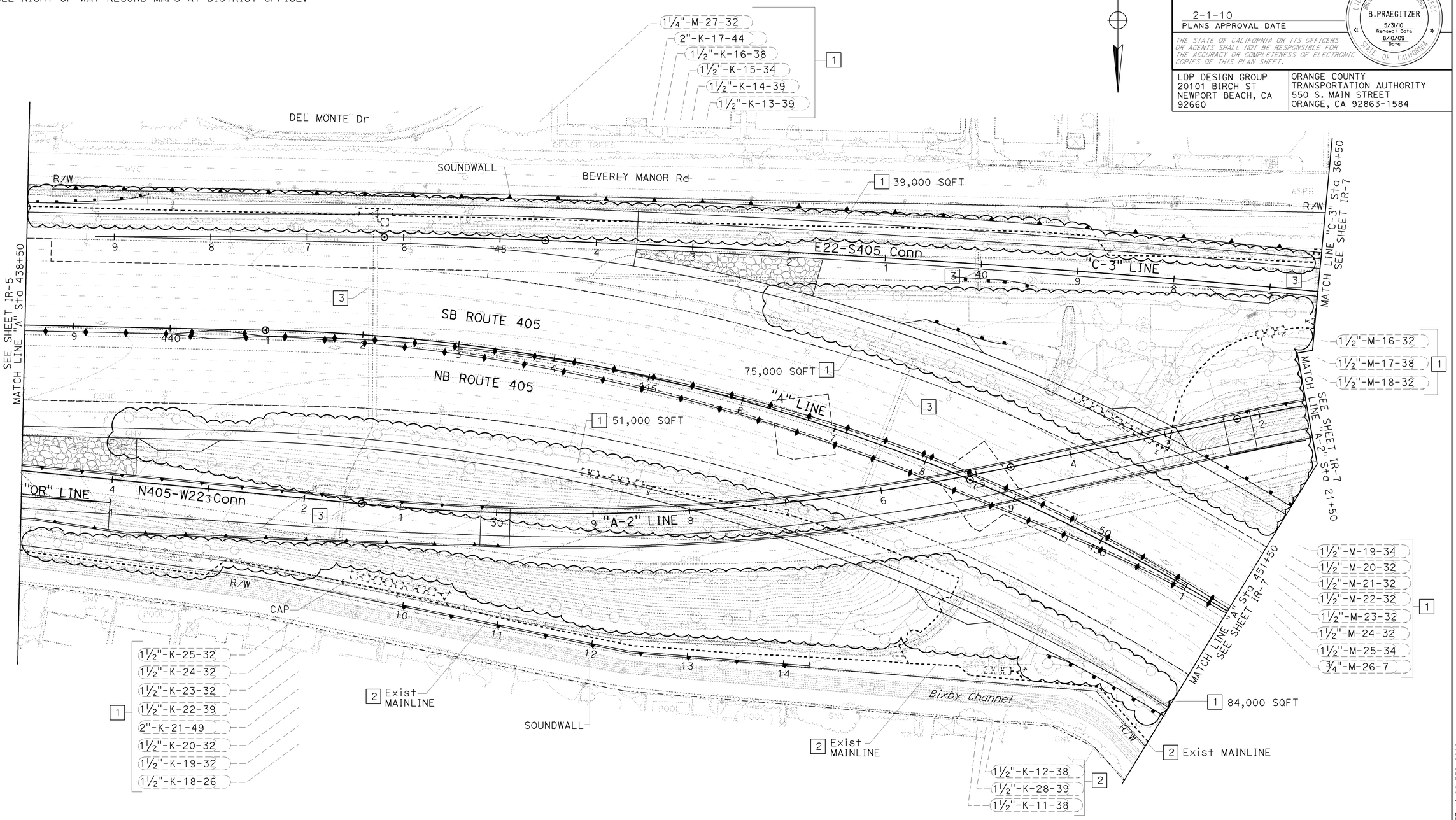

IRRIGATION REMOVAL PLAN

SCALE: 1" = 50'

IR-6

ALL IRRIGATION EQUIPMENT SIZES ARE SHOWN IN INCHES (DIAMETER NOMINAL) UNLESS OTHERWISE NOTED.

REVISED BY	DATE REVISED
BP	8-10-09

CHRIS MACDONALD — CALCULATED-DESIGNED BY
BRENT PRAEGITZER — CHECKED BY
CONSULTANT FUNCTIONAL SUPERVISOR: BRENT PRAEGITZER

STATE OF CALIFORNIA - DEPARTMENT OF TRANSPORTATION
Caltrans

LAST REVISION 08-10-09 | DATE PLOTTED => 04-FEB-2010 | TIME PLOTTED => 10:03

Dist	COUNTY	ROUTE	POST MILES TOTAL PROJECT	SHEET No.	TOTAL SHEETS
12	Ora	22,405, 605	R0.3/R0.9, 22.3/24.0,3.0/R1.6	1173	1929

8-10-09
LICENSED LANDSCAPE ARCHITECT DATE

2-1-10
PLANS APPROVAL DATE

LICENSED LANDSCAPE ARCHITECT
BRENT PRAEGITZER No.2089
B.PRAEGITZER
5/31/10 Renewal Date
8/10/09 Date
STATE OF CALIFORNIA

THE STATE OF CALIFORNIA OR ITS OFFICERS OR AGENTS SHALL NOT BE RESPONSIBLE FOR THE ACCURACY OR COMPLETENESS OF ELECTRONIC COPIES OF THIS PLAN SHEET.

LDP DESIGN GROUP
20101 BIRCH ST
NEWPORT BEACH, CA
92660

ORANGE COUNTY
TRANSPORTATION AUTHORITY
550 S. MAIN STREET
ORANGE, CA 92863-1584

NOTE:

1. FOR COMPLETE RIGHT OF WAY AND ACCURATE ACCESS DATA, SEE RIGHT OF WAY RECORD MAPS AT DISTRICT OFFICE.

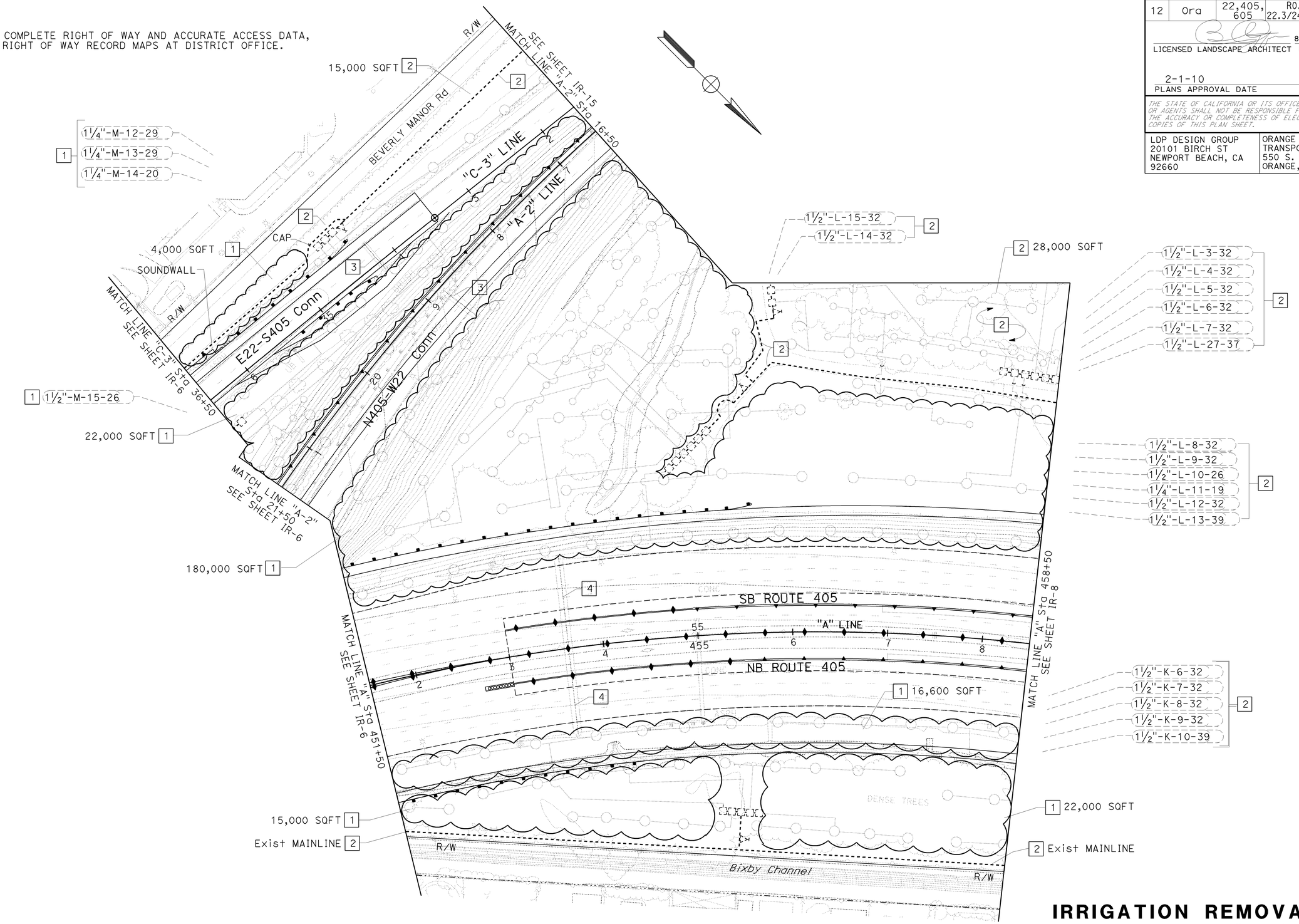

IRRIGATION REMOVAL PLAN

SCALE: 1" = 50'

IR-7

ALL IRRIGATION EQUIPMENT SIZES ARE SHOWN IN INCHES (DIAMETER NOMINAL) UNLESS OTHERWISE NOTED.

REVISED BY	DATE REVISED
BP	8-10-09

CHRIS MACDONALD — BRENT PRAEGITZER

CALCULATED-DESIGNED BY — BRENT PRAEGITZER

CHECKED BY

CONSULTANT FUNCTIONAL SUPERVISOR

STATE OF CALIFORNIA - DEPARTMENT OF TRANSPORTATION

Caltrans

LAST REVISION 08-10-09 | DATE PLOTTED => 04-FEB-2010 | TIME PLOTTED => 10:03

NOTE: 1. FOR COMPLETE RIGHT OF WAY AND ACCURATE ACCESS DATA, SEE RIGHT OF WAY RECORD MAPS AT DISTRICT OFFICE.

EXISTING 4" WATER METER
GOLDEN STATE WATER COMPANY
ACCOUNT NO: 835637

STATIC PRESSURE @ P.O.C.	60-75 PSI
MINIMUM PRESSURE REQUIRED	70 PSI
MAXIMUM FLOW REQUIRED	50 GPM
MINIMUM FLOW	20 GPM
AREA IRRIGATED	20 AC

(SEE METER AT BOTTOM OF SHEET)

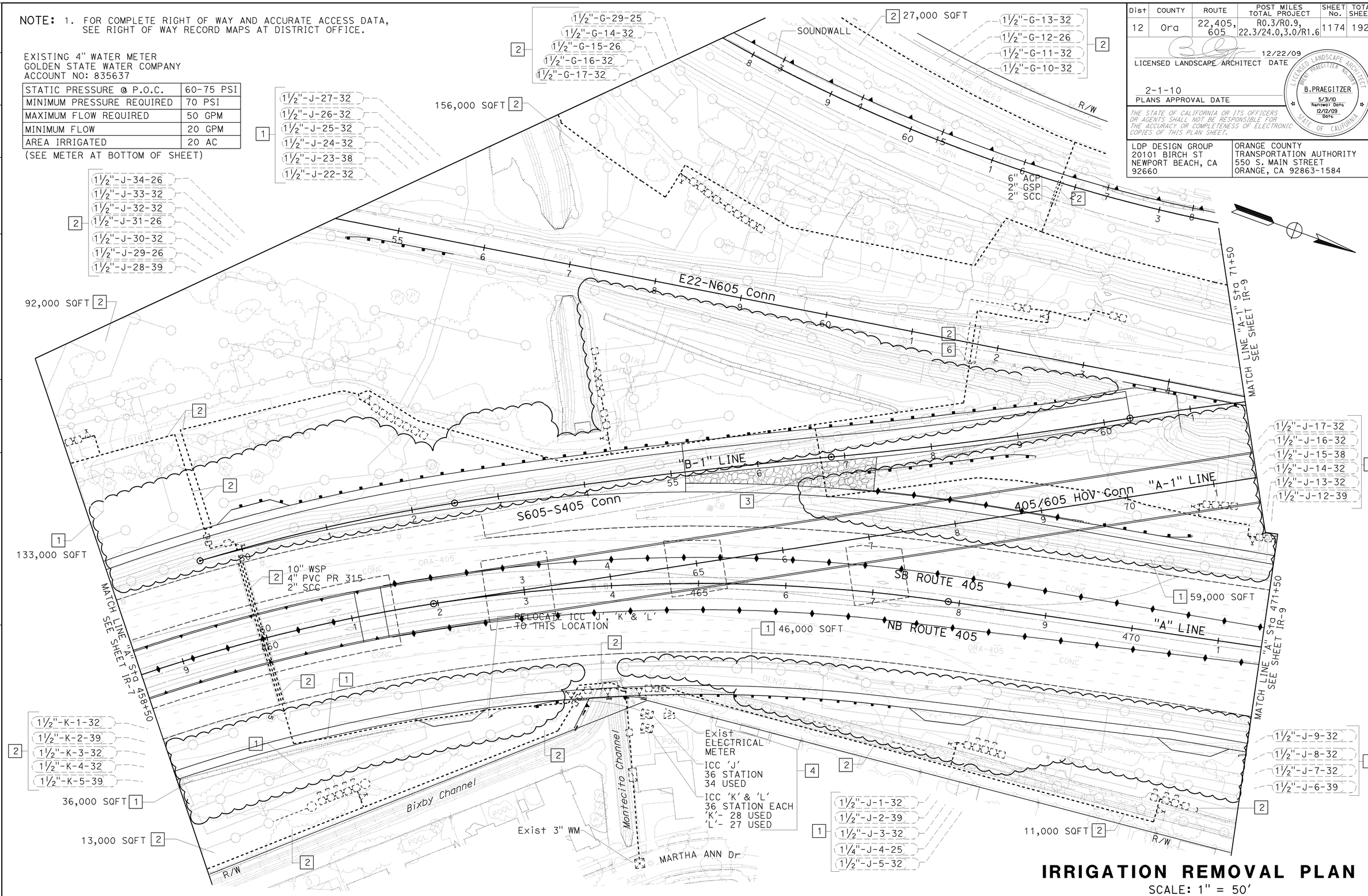

Dist	COUNTY	ROUTE	POST MILES TOTAL PROJECT	SHEET No.	TOTAL SHEETS
12	Ora	22,405, 605	R0.3/R0.9, 22.3/24.0,3.0/R1.6	1174	1929

12/22/09
LICENSED LANDSCAPE ARCHITECT DATE

2-1-10
PLANS APPROVAL DATE

LICENSED LANDSCAPE ARCHITECT BRENT PRAEGITZER No.2089 B.PRAEGITZER 5/31/10 Renewal Date 12/12/09 Date STATE OF CALIFORNIA

THE STATE OF CALIFORNIA OR ITS OFFICERS OR AGENTS SHALL NOT BE RESPONSIBLE FOR THE ACCURACY OR COMPLETENESS OF ELECTRONIC COPIES OF THIS PLAN SHEET.

LDP DESIGN GROUP
20101 BIRCH ST
NEWPORT BEACH, CA
92660

ORANGE COUNTY
TRANSPORTATION AUTHORITY
550 S. MAIN STREET
ORANGE, CA 92863-1584

IRRIGATION REMOVAL PLAN

SCALE: 1" = 50'

ALL IRRIGATION EQUIPMENT SIZES ARE SHOWN IN INCHES (DIAMETER NOMINAL) UNLESS OTHERWISE NOTED.

IR-8

REVISED BY	DATE REVISED
BP	12-22-09

CHRIS MACDONALD — CALCULATED-DESIGNED BY
BRENT PRAEGITZER — CHECKED BY
CONSULTANT FUNCTIONAL SUPERVISOR: BRENT PRAEGITZER

STATE OF CALIFORNIA - DEPARTMENT OF TRANSPORTATION
Caltrans

LAST REVISION 12-22-09 | DATE PLOTTED => 04-FEB-2010 | TIME PLOTTED => 10:03

NOTE: 1. FOR COMPLETE RIGHT OF WAY AND ACCURATE ACCESS DATA, SEE RIGHT OF WAY RECORD MAPS AT DISTRICT OFFICE.

Dist	COUNTY	ROUTE	POST MILES TOTAL PROJECT	SHEET No.	TOTAL SHEETS
12	Ora	22,405, 605	R0.3/R0.9, 22.3/24.0,3.0/R1.6	1175	1929

8-10-09
LICENSED LANDSCAPE ARCHITECT DATE

2-1-10
PLANS APPROVAL DATE

LICENSED LANDSCAPE ARCHITECT
BRENT PRAEGITZER No. 2089
B.PRAEGITZER
5/31/10
Renewal Date
8/10/09
Date
STATE OF CALIFORNIA

THE STATE OF CALIFORNIA OR ITS OFFICERS OR AGENTS SHALL NOT BE RESPONSIBLE FOR THE ACCURACY OR COMPLETENESS OF ELECTRONIC COPIES OF THIS PLAN SHEET.

LDP DESIGN GROUP
20101 BIRCH ST
NEWPORT BEACH, CA
92660

ORANGE COUNTY
TRANSPORTATION AUTHORITY
550 S. MAIN STREET
ORANGE, CA 92863-1584

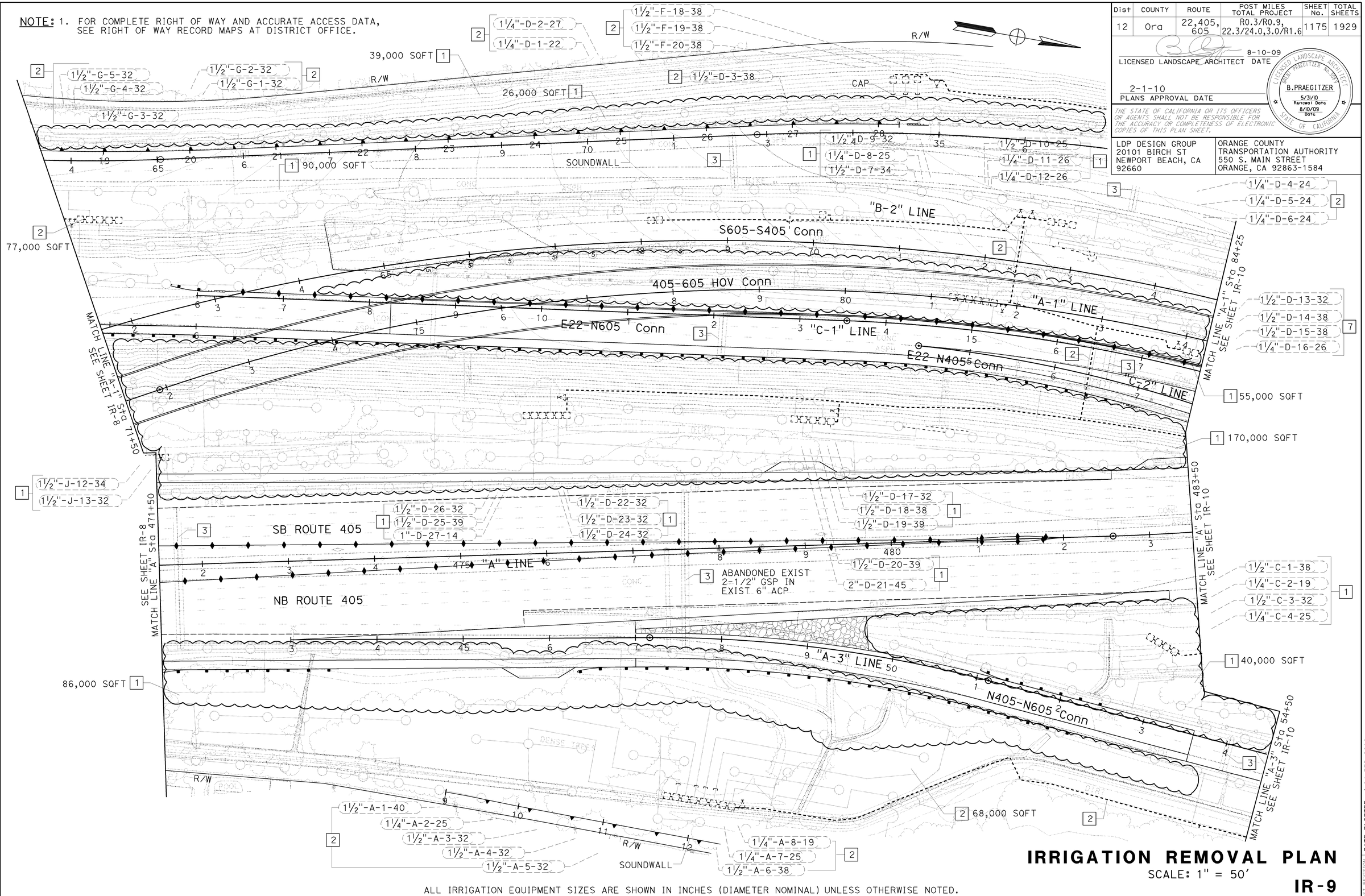

ALL IRRIGATION EQUIPMENT SIZES ARE SHOWN IN INCHES (DIAMETER NOMINAL) UNLESS OTHERWISE NOTED.

IRRIGATION REMOVAL PLAN

SCALE: 1" = 50'

IR-9

REVISED BY	DATE REVISED
BP	8-10-09

CHRIS MACDONALD — CALCULATED-DESIGNED BY
BRENT PRAEGITZER — CHECKED BY
CONSULTANT FUNCTIONAL SUPERVISOR: BRENT PRAEGITZER

STATE OF CALIFORNIA - DEPARTMENT OF TRANSPORTATION
Caltrans

LAST REVISION 08-10-09 | DATE PLOTTED => 04-FEB-2010 | TIME PLOTTED => 10:03

Dist	COUNTY	ROUTE	POST MILES TOTAL PROJECT	SHEET No.	TOTAL SHEETS
12	Ora	22,405, 605	R0.3/R0.9, 22.3/24.0,3.0/R1.6	1176	1929

12/22/09
LICENSED LANDSCAPE ARCHITECT DATE

2-1-10
PLANS APPROVAL DATE

LICENSED LANDSCAPE ARCHITECT
BRENT PRAEGITZER No. 2089
B.PRAEGITZER
5/31/10
Renewal Date
12/12/09
Date
STATE OF CALIFORNIA

THE STATE OF CALIFORNIA OR ITS OFFICERS OR AGENTS SHALL NOT BE RESPONSIBLE FOR THE ACCURACY OR COMPLETENESS OF ELECTRONIC COPIES OF THIS PLAN SHEET.

LDP DESIGN GROUP
20101 BIRCH ST
NEWPORT BEACH, CA
92660

ORANGE COUNTY
TRANSPORTATION AUTHORITY
550 S. MAIN STREET
ORANGE, CA 92863-1584

NOTE: 1. FOR COMPLETE RIGHT OF WAY AND ACCURATE ACCESS DATA, SEE RIGHT OF WAY RECORD MAPS AT DISTRICT OFFICE.

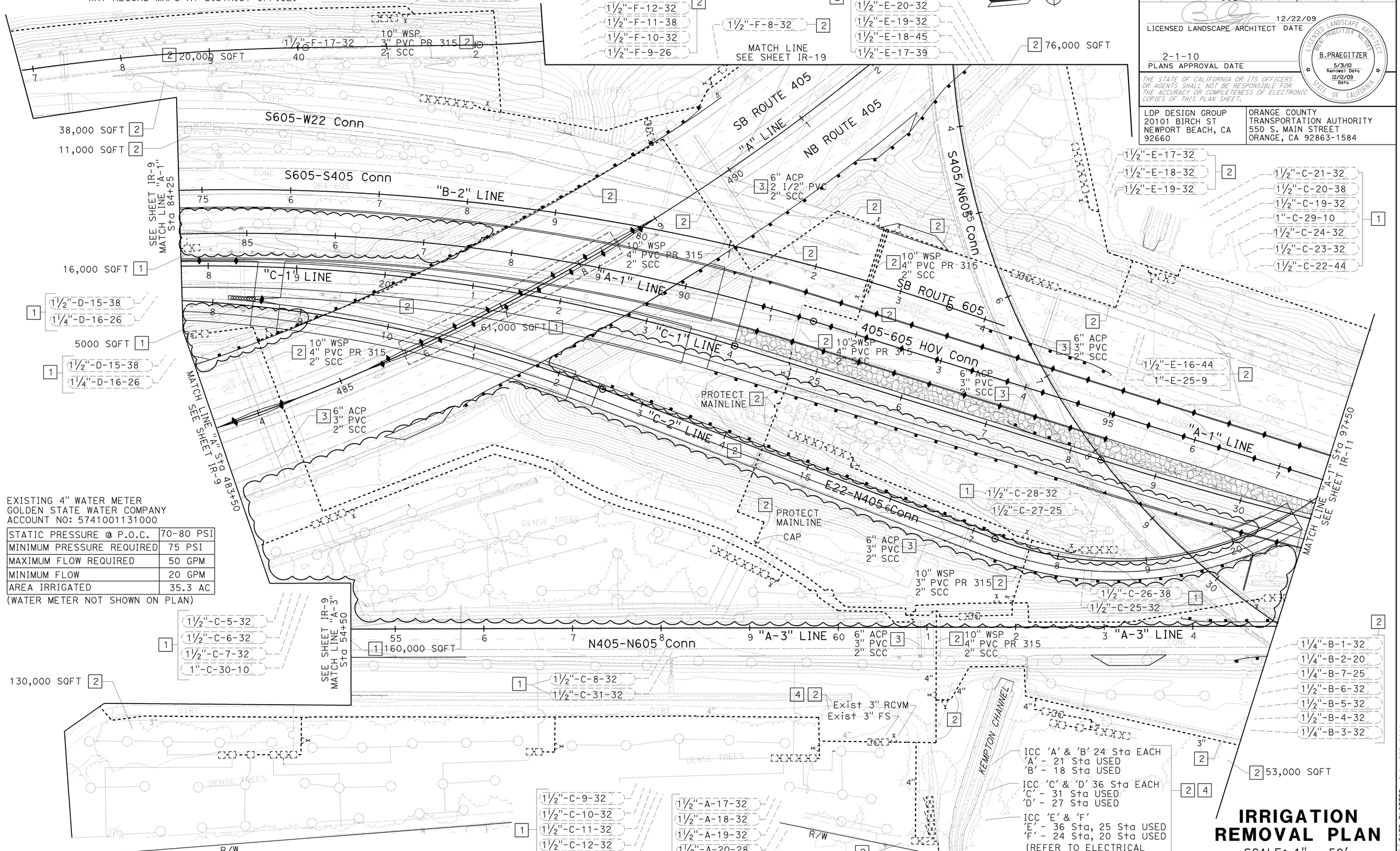

IRRIGATION REMOVAL PLAN

SCALE: 1" = 50'

IR-10

ALL IRRIGATION EQUIPMENT SIZES ARE SHOWN IN INCHES (DIAMETER NOMINAL) UNLESS OTHERWISE NOTED.

REVISED BY	BP	CHRIS MACDONALD	BRENT PRAEGITZER
DATE REVISED	12-22-09	CALCULATED-DESIGNED BY	BRENT PRAEGITZER
		CHECKED BY	
		CONSULTANT FUNCTIONAL SUPERVISOR	

STATE OF CALIFORNIA - DEPARTMENT OF TRANSPORTATION
Caltrans

LAST REVISION 12-22-09
DATE PLOTTED => 04-FEB-2010
TIME PLOTTED => 08:37

Dist	COUNTY	ROUTE	POST MILES TOTAL PROJECT	SHEET No.	TOTAL SHEETS
12	Ora	22,405, 605	R0.3/R0.9, 22.3/24.0,3.0/R1.6	1177	1929

12/22/09
LICENSED LANDSCAPE ARCHITECT DATE

2-1-10
PLANS APPROVAL DATE

LICENSED LANDSCAPE ARCHITECT
BRENT PRAEGITZER No.2089
B.PRAEGITZER
5/31/10 Renewal Date
12/12/09 Date
STATE OF CALIFORNIA

THE STATE OF CALIFORNIA OR ITS OFFICERS OR AGENTS SHALL NOT BE RESPONSIBLE FOR THE ACCURACY OR COMPLETENESS OF ELECTRONIC COPIES OF THIS PLAN SHEET.

LDP DESIGN GROUP
20101 BIRCH ST
NEWPORT BEACH, CA
92660

ORANGE COUNTY
TRANSPORTATION AUTHORITY
550 S. MAIN STREET
ORANGE, CA 92863-1584

NOTE: 1. FOR COMPLETE RIGHT OF WAY AND ACCURATE ACCESS DATA, SEE RIGHT OF WAY RECORD MAPS AT DISTRICT OFFICE.

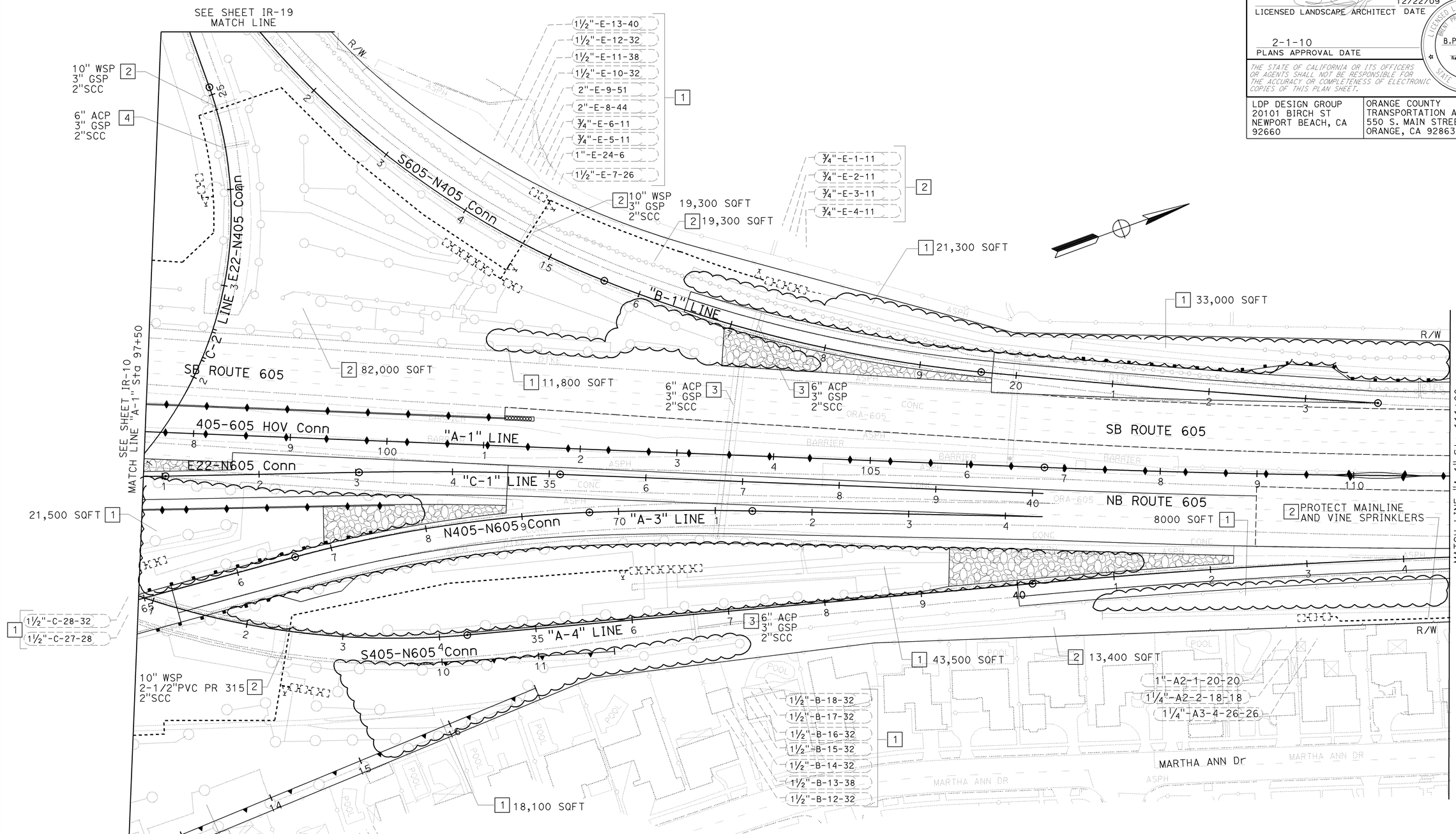

IRRIGATION REMOVAL PLAN

SCALE: 1" = 50'

IR-11

ALL IRRIGATION EQUIPMENT SIZES ARE SHOWN IN INCHES (DIAMETER NOMINAL) UNLESS OTHERWISE NOTED.

STATE OF CALIFORNIA - DEPARTMENT OF TRANSPORTATION
Caltrans

CONSULTANT FUNCTIONAL SUPERVISOR: BRENT PRAEGITZER
CALCULATED-DESIGNED BY: CHRIS MACDONALD
CHECKED BY: BRENT PRAEGITZER
REVISED BY: BP
DATE REVISED: 12-22-09

LAST REVISION 12-22-09
DATE PLOTTED => 04-FEB-2010
TIME PLOTTED => 08:38

Dist	COUNTY	ROUTE	POST MILES TOTAL PROJECT	SHEET No.	TOTAL SHEETS
12	Ora	22,405, 605	R0.3/R0.9, 22.3/24.0,3.0/R1.6	1178	1929

8-10-09
LICENSED LANDSCAPE ARCHITECT DATE

2-1-10
PLANS APPROVAL DATE

LICENSED LANDSCAPE ARCHITECT
BRENT PRAEGITZER No.3089
B.PRAEGITZER
5/31/10
Renewal Date
8/10/09
Date
STATE OF CALIFORNIA

THE STATE OF CALIFORNIA OR ITS OFFICERS OR AGENTS SHALL NOT BE RESPONSIBLE FOR THE ACCURACY OR COMPLETENESS OF ELECTRONIC COPIES OF THIS PLAN SHEET.

LDP DESIGN GROUP
20101 BIRCH ST
NEWPORT BEACH, CA
92660

ORANGE COUNTY
TRANSPORTATION AUTHORITY
550 S. MAIN STREET
ORANGE, CA 92863-1584

NOTE:

1. FOR COMPLETE RIGHT OF WAY AND ACCURATE ACCESS DATA, SEE RIGHT OF WAY RECORD MAPS AT DISTRICT OFFICE.

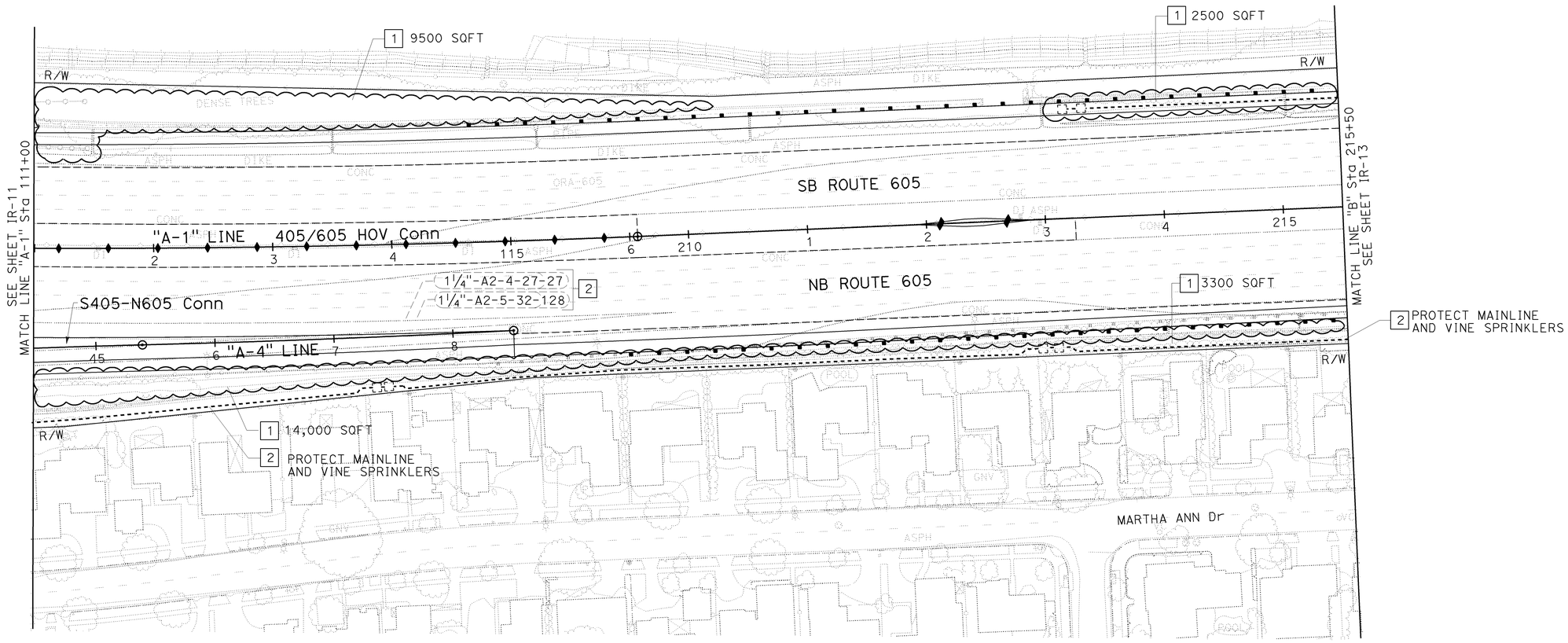

IRRIGATION REMOVAL PLAN

SCALE: 1" = 50'

IR-12

ALL IRRIGATION EQUIPMENT SIZES ARE SHOWN IN INCHES (DIAMETER NOMINAL) UNLESS OTHERWISE NOTED.

STATE OF CALIFORNIA - DEPARTMENT OF TRANSPORTATION
Caltrans

CONSULTANT FUNCTIONAL SUPERVISOR: BRENT PRAEGITZER
CALCULATED-DESIGNED BY: CHRIS MACDONALD
CHECKED BY: BRENT PRAEGITZER
REVISED BY: BP
DATE REVISED: 8-10-09

LAST REVISION 08-10-09
DATE PLOTTED => 04-FEB-2010
TIME PLOTTED => 08:38

Dist	COUNTY	ROUTE	POST MILES TOTAL PROJECT	SHEET No.	TOTAL SHEETS
12	Ora	22,405, 605	R0.3/R0.9, 22.3/24.0,3.0/R1.6	1179	1929

12/22/09
LICENSED LANDSCAPE ARCHITECT DATE

2-1-10
PLANS APPROVAL DATE

LICENSED LANDSCAPE ARCHITECT
BRENT PRAEGITZER No.3089
B.PRAEGITZER
5/31/10
Renewal Date
12/12/09
Date
STATE OF CALIFORNIA

THE STATE OF CALIFORNIA OR ITS OFFICERS OR AGENTS SHALL NOT BE RESPONSIBLE FOR THE ACCURACY OR COMPLETENESS OF ELECTRONIC COPIES OF THIS PLAN SHEET.

LDP DESIGN GROUP
20101 BIRCH ST
NEWPORT BEACH, CA
92660

ORANGE COUNTY
TRANSPORTATION AUTHORITY
550 S. MAIN STREET
ORANGE, CA 92863-1584

NOTE:

1. FOR COMPLETE RIGHT OF WAY AND ACCURATE ACCESS DATA, SEE RIGHT OF WAY RECORD MAPS AT DISTRICT OFFICE.

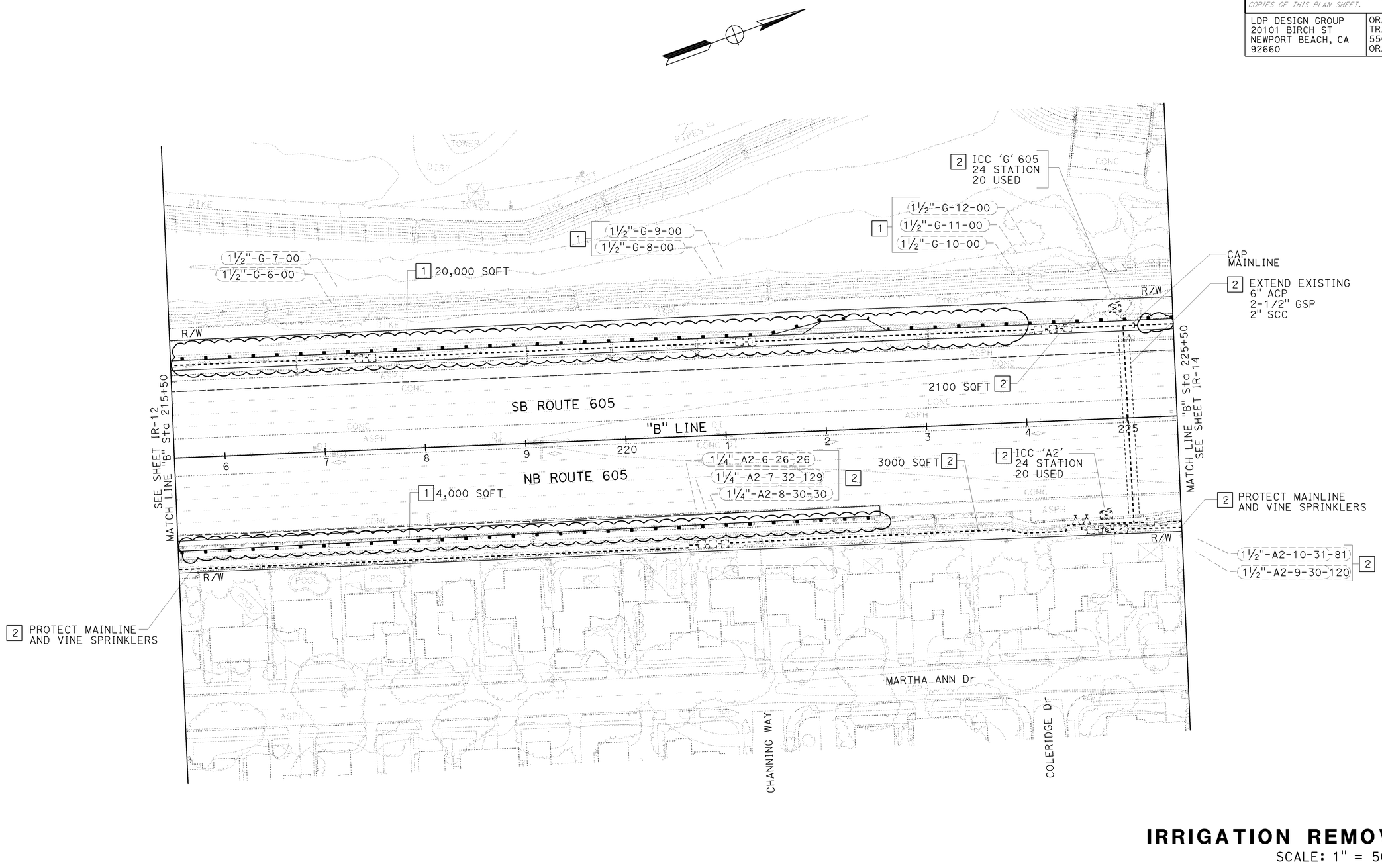

IRRIGATION REMOVAL PLAN

SCALE: 1" = 50'

IR-13

ALL IRRIGATION EQUIPMENT SIZES ARE SHOWN IN INCHES (DIAMETER NOMINAL) UNLESS OTHERWISE NOTED.

REVISED BY	BP
DATE REVISED	12-22-09
CALCULATED-DESIGNED BY	CHRIS MACDONALD
CHECKED BY	BRENT PRAEGITZER
CONSULTANT FUNCTIONAL SUPERVISOR	BRENT PRAEGITZER

STATE OF CALIFORNIA - DEPARTMENT OF TRANSPORTATION
Caltrans

LAST REVISION 12-22-09 | DATE PLOTTED => 04-FEB-2010 | TIME PLOTTED => 08:38

Dist	COUNTY	ROUTE	POST MILES TOTAL PROJECT	SHEET No.	TOTAL SHEETS
12	Ora	22,405, 605	R0.3/R0.9, 22.3/24.0,3.0/R1.6	1180	1929

12/22/09
LICENSED LANDSCAPE ARCHITECT DATE

2-1-10
PLANS APPROVAL DATE

LICENSED LANDSCAPE ARCHITECT
BRENT PRAEGITZER No.3089
B.PRAEGITZER
5/31/10
Renewal Date
12/12/09
Date
STATE OF CALIFORNIA

THE STATE OF CALIFORNIA OR ITS OFFICERS OR AGENTS SHALL NOT BE RESPONSIBLE FOR THE ACCURACY OR COMPLETENESS OF ELECTRONIC COPIES OF THIS PLAN SHEET.

LDP DESIGN GROUP
20101 BIRCH ST
NEWPORT BEACH, CA
92660

ORANGE COUNTY
TRANSPORTATION AUTHORITY
550 S. MAIN STREET
ORANGE, CA 92863-1584

NOTE:

1. FOR COMPLETE RIGHT OF WAY AND ACCURATE ACCESS DATA, SEE RIGHT OF WAY RECORD MAPS AT DISTRICT OFFICE.

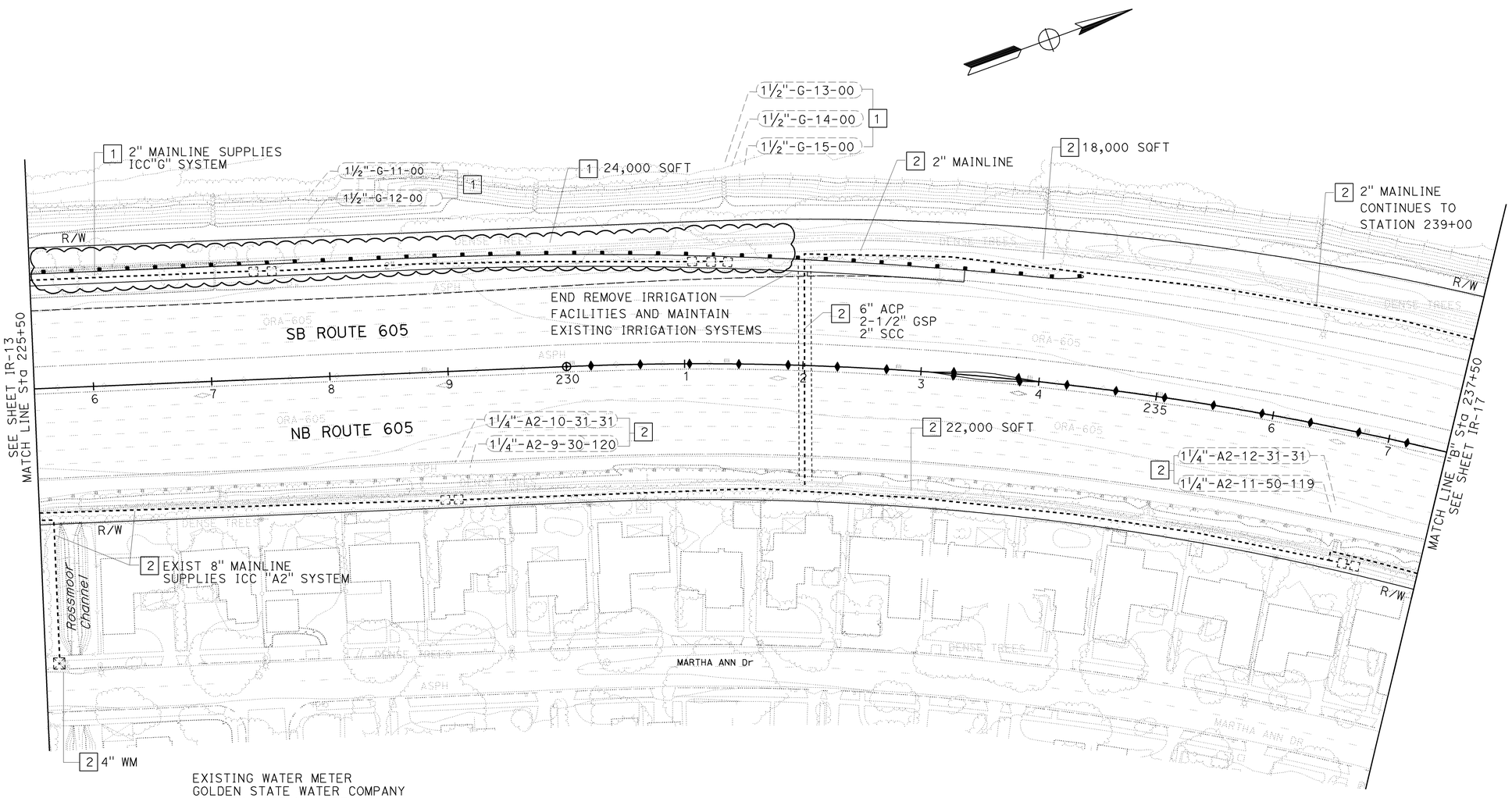

EXISTING WATER METER
GOLDEN STATE WATER COMPANY
UTILITY ACCT NO: 835645

STATIC PRESSURE @ P.O.C.	60-75 PSI
MINIMUM PRESSURE REQUIRED	65 PSI
MAXIMUM FLOW REQUIRED	50 GPM
MINIMUM FLOW	20 GPM
AREA IRRIGATED	5 AC

ALL IRRIGATION EQUIPMENT SIZES ARE SHOWN IN INCHES (DIAMETER NOMINAL) UNLESS OTHERWISE NOTED.

IRRIGATION REMOVAL PLAN

SCALE: 1" = 50'

IR-14

STATE OF CALIFORNIA - DEPARTMENT OF TRANSPORTATION
Caltrans

CONSULTANT FUNCTIONAL SUPERVISOR: BRENT PRAEGITZER
CALCULATED-DESIGNED BY: CHRIS MACDONALD
CHECKED BY: BRENT PRAEGITZER
REVISED BY: BP
DATE REVISED: 12-22-09

LAST REVISION 12-22-09
DATE PLOTTED => 04-FEB-2010
TIME PLOTTED => 08:58

Dist	COUNTY	ROUTE	POST MILES TOTAL PROJECT	SHEET No.	TOTAL SHEETS
12	Ora	22,405, 605	R0.3/R0.9, 22.3/24.0,3.0/R1.6	1181	1929

12/22/09
LICENSED LANDSCAPE ARCHITECT DATE

2-1-10
PLANS APPROVAL DATE

LICENSED LANDSCAPE ARCHITECT
BRENT PRAEGITZER No. 2089
B.PRAEGITZER
5/31/10
Renewal Date
12/12/09
Date
STATE OF CALIFORNIA

THE STATE OF CALIFORNIA OR ITS OFFICERS OR AGENTS SHALL NOT BE RESPONSIBLE FOR THE ACCURACY OR COMPLETENESS OF ELECTRONIC COPIES OF THIS PLAN SHEET.

LDP DESIGN GROUP
20101 BIRCH ST
NEWPORT BEACH, CA
92660

ORANGE COUNTY
TRANSPORTATION AUTHORITY
550 S. MAIN STREET
ORANGE, CA 92863-1584

NOTE:

1. FOR COMPLETE RIGHT OF WAY AND ACCURATE ACCESS DATA, SEE RIGHT OF WAY RECORD MAPS AT DISTRICT OFFICE.

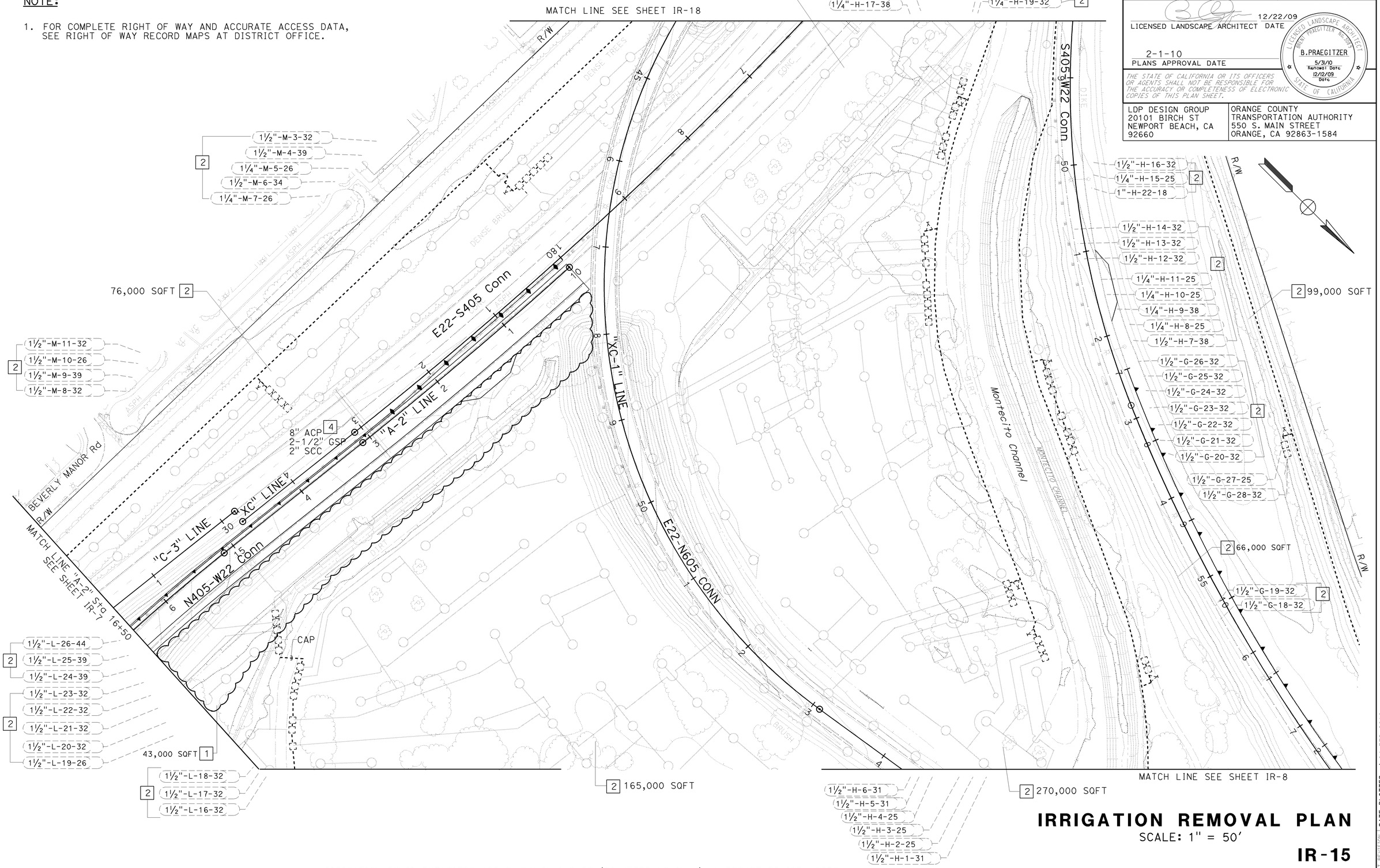

IRRIGATION REMOVAL PLAN

SCALE: 1" = 50'

IR-15

ALL IRRIGATION EQUIPMENT SIZES ARE SHOWN IN INCHES (DIAMETER NOMINAL) UNLESS OTHERWISE NOTED.

STATE OF CALIFORNIA - DEPARTMENT OF TRANSPORTATION
Caltrans
CONSULTANT FUNCTIONAL SUPERVISOR: BRENT PRAEGITZER
CALCULATED-DESIGNED BY: CHRIS MACDONALD
CHECKED BY: BRENT PRAEGITZER
REVISED BY: BP
DATE REVISED: 12-22-09

LAST REVISION DATE PLOTTED => 04-FEB-2010
TIME PLOTTED => 08:38

Dist	COUNTY	ROUTE	POST MILES TOTAL PROJECT	SHEET No.	TOTAL SHEETS
12	Ora	22,405, 605	R0.3/R0.9, 22.3/24.0,3.0/R1.6	1182	1929

12/22/09
LICENSED LANDSCAPE ARCHITECT DATE

2-1-10
PLANS APPROVAL DATE

LICENSED LANDSCAPE ARCHITECT
BRENT PRAEGITZER No.3089
B.PRAEGITZER
5/31/10
Renewal Date
12/12/09
Date
STATE OF CALIFORNIA

THE STATE OF CALIFORNIA OR ITS OFFICERS OR AGENTS SHALL NOT BE RESPONSIBLE FOR THE ACCURACY OR COMPLETENESS OF ELECTRONIC COPIES OF THIS PLAN SHEET.

LDP DESIGN GROUP
20101 BIRCH ST
NEWPORT BEACH, CA
92660

ORANGE COUNTY
TRANSPORTATION AUTHORITY
550 S. MAIN STREET
ORANGE, CA 92863-1584

NOTE:

1. FOR COMPLETE RIGHT OF WAY AND ACCURATE ACCESS DATA, SEE RIGHT OF WAY RECORD MAPS AT DISTRICT OFFICE.

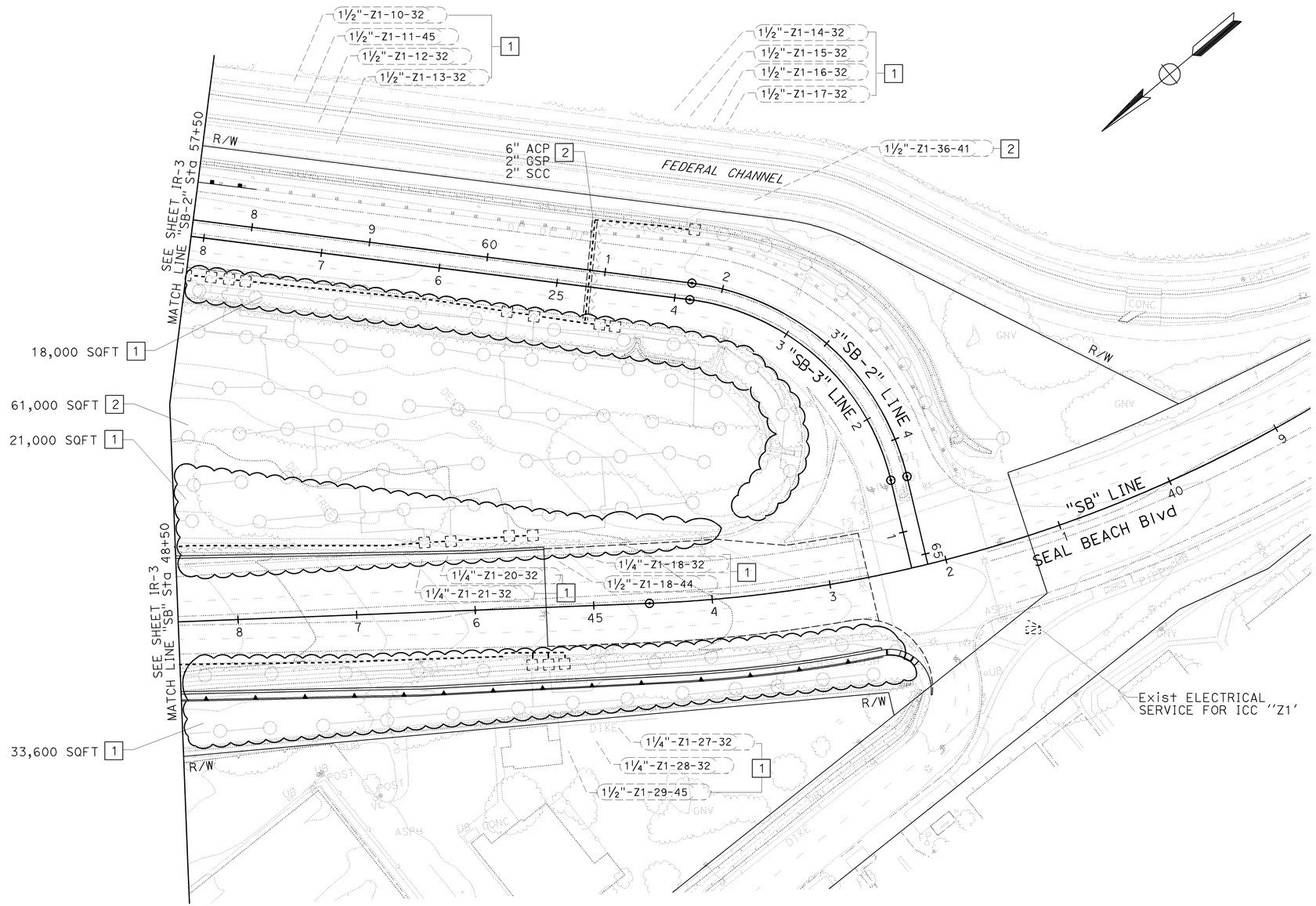

IRRIGATION REMOVAL PLAN

SCALE: 1" = 50'

IR-16

ALL IRRIGATION EQUIPMENT SIZES ARE SHOWN IN INCHES (DIAMETER NOMINAL) UNLESS OTHERWISE NOTED.

REVISED BY	BP
DATE REVISED	12-22-09
CHRIS MACDONALD	BRENT PRAEGITZER
CALCULATED-DESIGNED BY	
CHECKED BY	
CONSULTANT FUNCTIONAL SUPERVISOR	BRENT PRAEGITZER

STATE OF CALIFORNIA - DEPARTMENT OF TRANSPORTATION

Caltrans

LAST REVISION 12-22-09 | DATE PLOTTED => 04-FEB-2010 | TIME PLOTTED => 08:38

Dist	COUNTY	ROUTE	POST MILES TOTAL PROJECT	SHEET No.	TOTAL SHEETS
12	Ora	22,405, 605	R0.3/R0.9, 22.3/24.0,3.0/R1.6	1183	1929

8-10-09
LICENSED LANDSCAPE ARCHITECT DATE

2-1-10
PLANS APPROVAL DATE

LICENSED LANDSCAPE ARCHITECT
BRENT PRAEGITZER No.2089
B.PRAEGITZER
5/31/10
Renewal Date
8/10/09
Date
STATE OF CALIFORNIA

THE STATE OF CALIFORNIA OR ITS OFFICERS OR AGENTS SHALL NOT BE RESPONSIBLE FOR THE ACCURACY OR COMPLETENESS OF ELECTRONIC COPIES OF THIS PLAN SHEET.

LDP DESIGN GROUP
20101 BIRCH ST
NEWPORT BEACH, CA
92660

ORANGE COUNTY
TRANSPORTATION AUTHORITY
550 S. MAIN STREET
ORANGE, CA 92863-1584

NOTE:

1. FOR COMPLETE RIGHT OF WAY AND ACCURATE ACCESS DATA, SEE RIGHT OF WAY RECORD MAPS AT DISTRICT OFFICE.

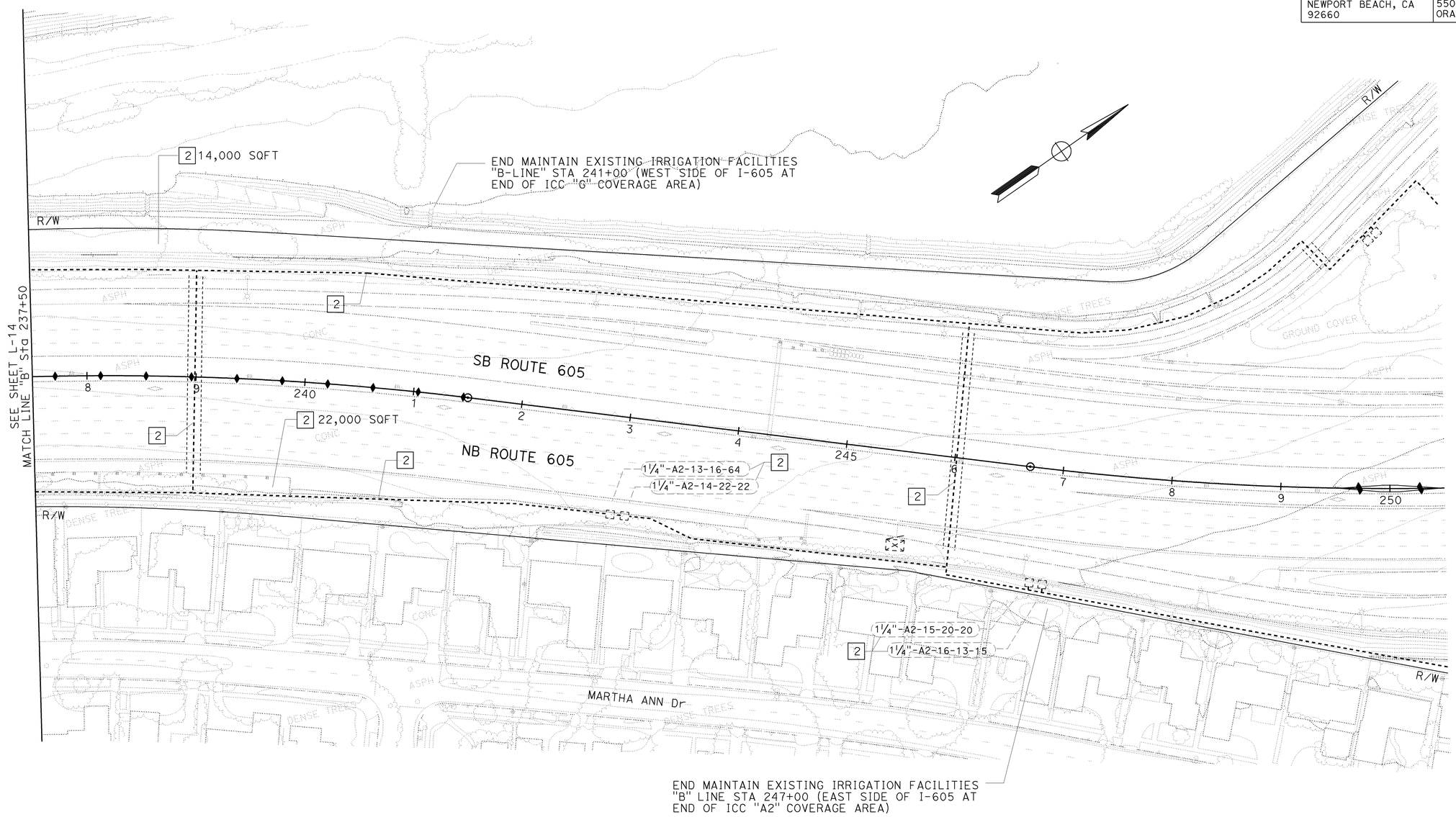

IRRIGATION REMOVAL PLAN

SCALE: 1" = 50'

IR-17

ALL IRRIGATION EQUIPMENT SIZES ARE SHOWN IN INCHES (DIAMETER NOMINAL) UNLESS OTHERWISE NOTED.

STATE OF CALIFORNIA - DEPARTMENT OF TRANSPORTATION
Caltrans

CONSULTANT FUNCTIONAL SUPERVISOR: BRENT PRAEGITZER
CALCULATED-DESIGNED BY: CHRIS MACDONALD
CHECKED BY: BRENT PRAEGITZER
REVISED BY: BP
DATE REVISED: 8-10-09

LAST REVISION 08-10-09
DATE PLOTTED => 04-FEB-2010
TIME PLOTTED => 09:28

Dist	COUNTY	ROUTE	POST MILES TOTAL PROJECT	SHEET No.	TOTAL SHEETS
12	Ora	22,405, 605	R0.3/R0.9, 22.3/24.0,3.0/R1.6	1184	1929

8-10-09
LICENSED LANDSCAPE ARCHITECT DATE

2-1-10
PLANS APPROVAL DATE

LICENSED LANDSCAPE ARCHITECT
BRENT PRAEGITZER No.3089
B.PRAEGITZER
5/31/10
Renewal Date
8/10/09
Date
STATE OF CALIFORNIA

THE STATE OF CALIFORNIA OR ITS OFFICERS OR AGENTS SHALL NOT BE RESPONSIBLE FOR THE ACCURACY OR COMPLETENESS OF ELECTRONIC COPIES OF THIS PLAN SHEET.

LDP DESIGN GROUP
20101 BIRCH ST
NEWPORT BEACH, CA
92660

ORANGE COUNTY
TRANSPORTATION AUTHORITY
550 S. MAIN STREET
ORANGE, CA 92863-1584

NOTE:

1. FOR COMPLETE RIGHT OF WAY AND ACCURATE ACCESS DATA, SEE RIGHT OF WAY RECORD MAPS AT DISTRICT OFFICE.

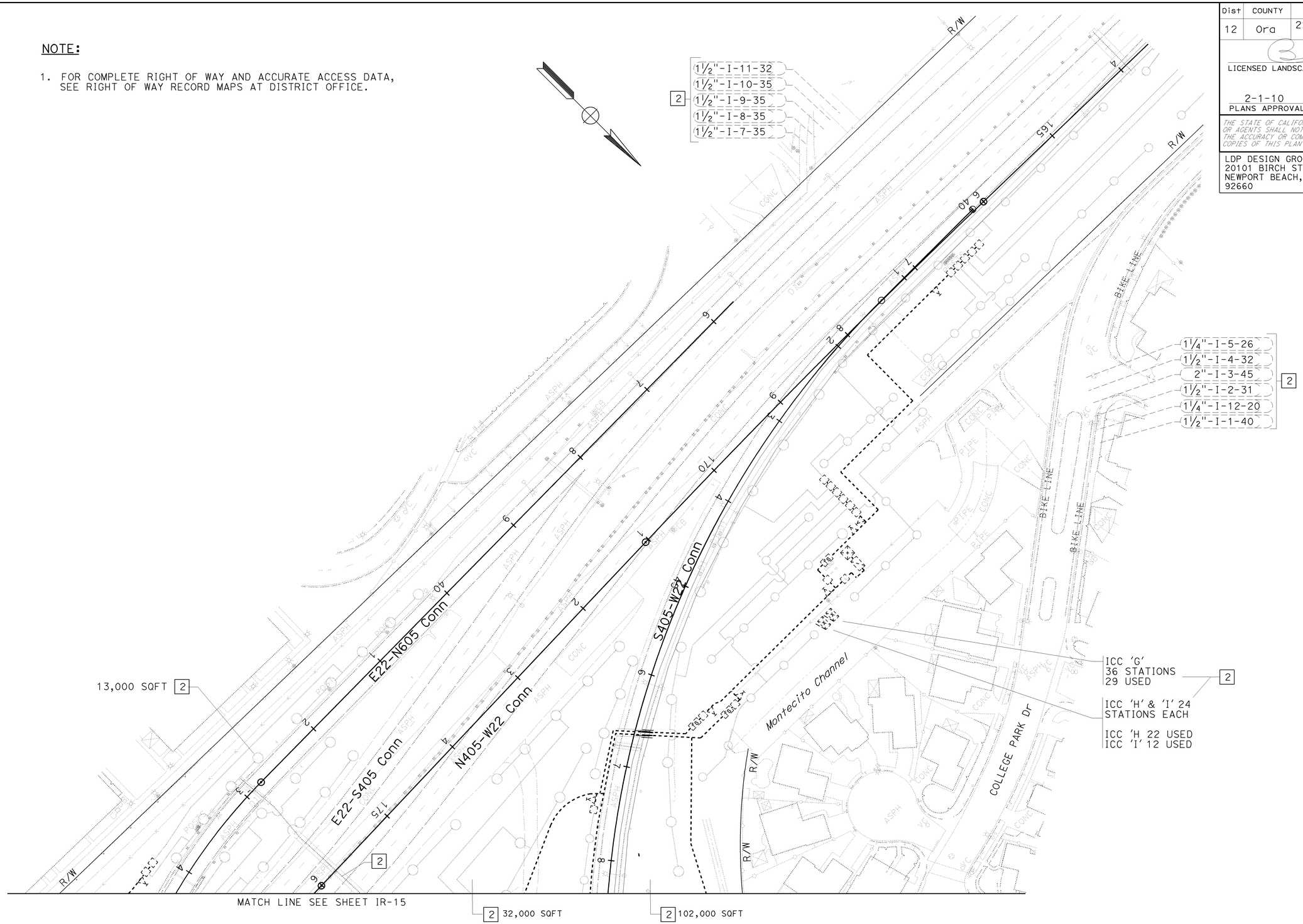

IRRIGATION REMOVAL PLAN

SCALE: 1" = 50'

IR-18

ALL IRRIGATION EQUIPMENT SIZES ARE SHOWN IN INCHES (DIAMETER NOMINAL) UNLESS OTHERWISE NOTED.

STATE OF CALIFORNIA - DEPARTMENT OF TRANSPORTATION
Caltrans

CONSULTANT FUNCTIONAL SUPERVISOR: BRENT PRAEGITZER
CALCULATED-DESIGNED BY: CHRIS MACDONALD
CHECKED BY: BRENT PRAEGITZER
REVISED BY: BP
DATE REVISED: 8-10-09

LAST REVISION 08-10-09
DATE PLOTTED => 04-FEB-2010
TIME PLOTTED => 08:39

Dist	COUNTY	ROUTE	POST MILES TOTAL PROJECT	SHEET No.	TOTAL SHEETS
12	Ora	22,405, 605	R0.3/R0.9, 22.3/24.0,3.0/R1.6	1185	1929

LICENSED LANDSCAPE ARCHITECT 8-10-09 DATE

2-1-10
PLANS APPROVAL DATE

LICENSED LANDSCAPE ARCHITECT
BRENT PRAEGITZER No.2089
B.PRAEGITZER
5/31/10
Renewal Date
8/10/09
Date
STATE OF CALIFORNIA

THE STATE OF CALIFORNIA OR ITS OFFICERS OR AGENTS SHALL NOT BE RESPONSIBLE FOR THE ACCURACY OR COMPLETENESS OF ELECTRONIC COPIES OF THIS PLAN SHEET.

LDP DESIGN GROUP
20101 BIRCH ST
NEWPORT BEACH, CA
92660

ORANGE COUNTY
TRANSPORTATION AUTHORITY
550 S. MAIN STREET
ORANGE, CA 92863-1584

NOTE:

1. FOR COMPLETE RIGHT OF WAY AND ACCURATE ACCESS DATA, SEE RIGHT OF WAY RECORD MAPS AT DISTRICT OFFICE.

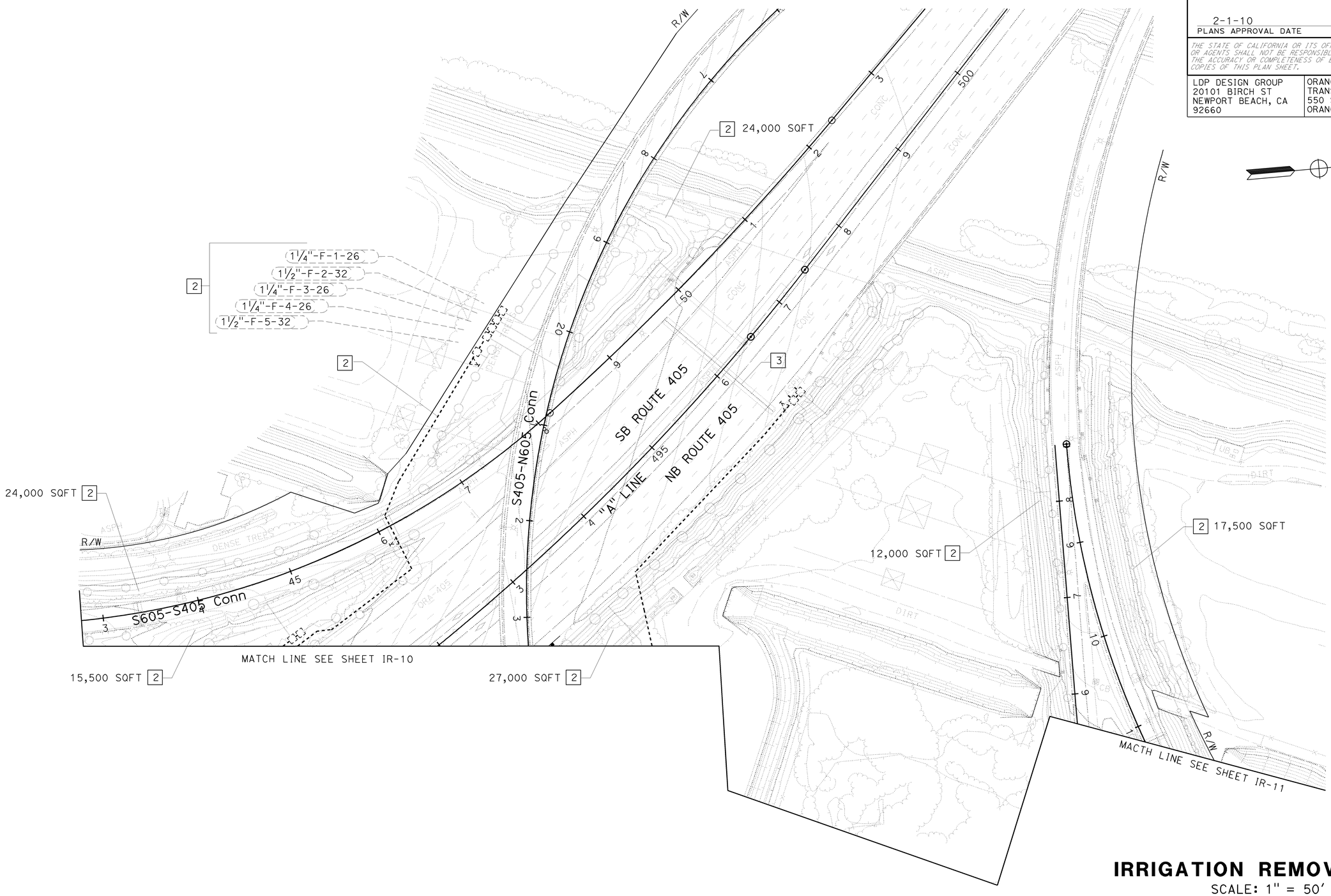

ALL IRRIGATION EQUIPMENT SIZES ARE SHOWN IN INCHES (DIAMETER NOMINAL) UNLESS OTHERWISE NOTED.

IRRIGATION REMOVAL PLAN

SCALE: 1" = 50'

IR-19

STATE OF CALIFORNIA - DEPARTMENT OF TRANSPORTATION
Caltrans

CONSULTANT FUNCTIONAL SUPERVISOR: BRENT PRAEGITZER

CALCULATED-DESIGNED BY: CHRIS MACDONALD
CHECKED BY: BRENT PRAEGITZER

REVISED BY: BP
DATE REVISED: 8-10-09

LAST REVISION 08-10-09 | DATE PLOTTED => 04-FEB-2010 | TIME PLOTTED => 08:39

Dist	COUNTY	ROUTE	POST MILES TOTAL PROJECT	SHEET No.	TOTAL SHEETS
12	Ora	22,405, 605	R0.3/R0.9, 22.3/24.0,3.0/R1.6	1186	1929

12/22/09
LICENSED LANDSCAPE ARCHITECT DATE

2-1-10
PLANS APPROVAL DATE

LICENSED LANDSCAPE ARCHITECT
BRENT PRAEGITZER No.3089
B.PRAEGITZER
5/31/10
Renewal Date
12/12/09
Date
STATE OF CALIFORNIA

THE STATE OF CALIFORNIA OR ITS OFFICERS OR AGENTS SHALL NOT BE RESPONSIBLE FOR THE ACCURACY OR COMPLETENESS OF ELECTRONIC COPIES OF THIS PLAN SHEET.

LDP DESIGN GROUP
20101 BIRCH ST
NEWPORT BEACH, CA
92660

ORANGE COUNTY
TRANSPORTATION AUTHORITY
550 S. MAIN STREET
ORANGE, CA 92863-1584

TREE PRUNING

(1) REMOVE ALL SUCKER GROWTH, FOLIAGE AND BRANCHES LESS THAN 2" IN DIAMETER FROM EXISTING GRADE TO 7' ABOVE GRADE.

SHRUB PRUNING

(2) REMOVE ALL SUCKER GROWTH, FOLIAGE AND BRANCHES LESS THAN 1/2" DIAMETER FROM EXISTING GRADE TO 3' ABOVE GRADE.

NOTE:
REFER TO PLANS AND SPECIFICATIONS FOR ADDITIONAL PRUNING REQUIREMENTS.

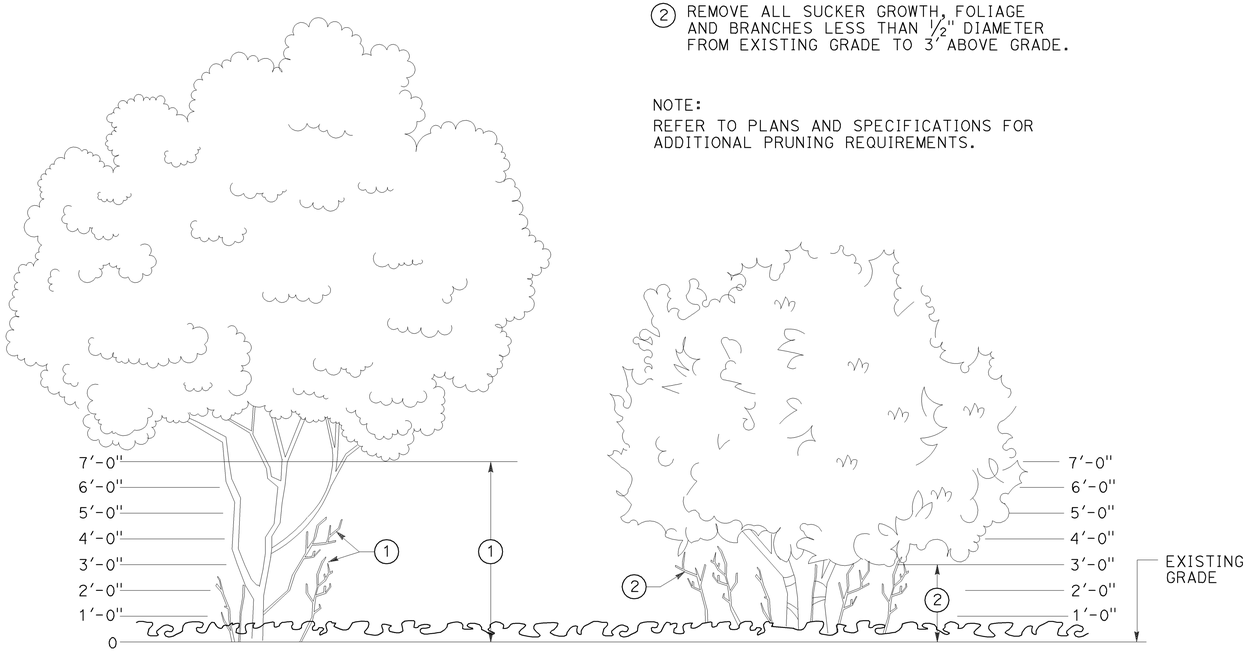

PRUNE EXISTING PLANTS
(TREE AND LARGE SHRUB PRUNING DETAIL)
NO SCALE

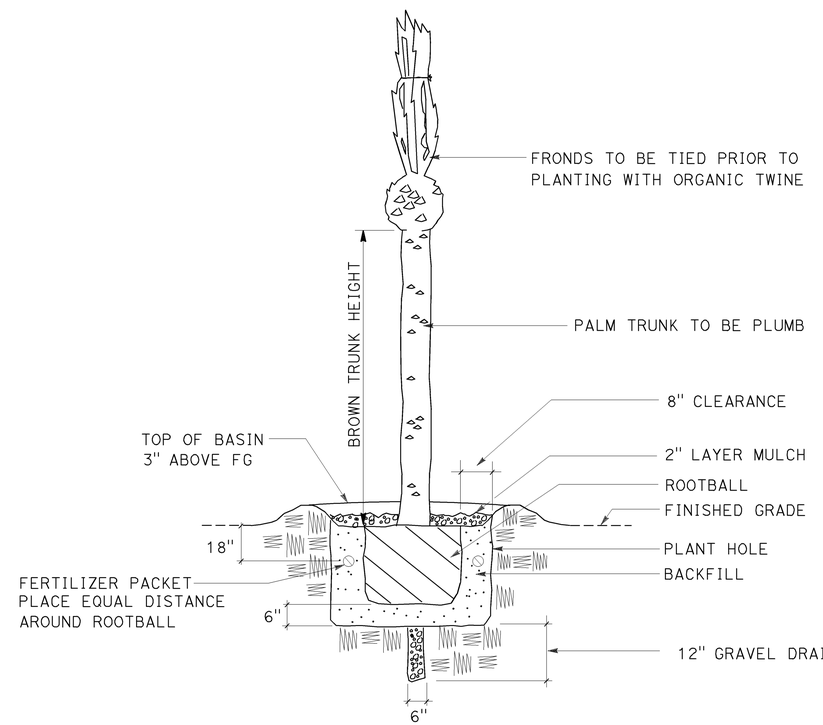

PALM TREE PLANTING/TRANSPLANTING DETAIL
NO SCALE

LANDSCAPE DETAILS
NO SCALE

LD-1

REVISED BY	BP
DATE REVISED	12-22-09

CHRIS MACDONALD — CALCULATED-DESIGNED BY
BRENT PRAEGITZER — CHECKED BY
CONSULTANT FUNCTIONAL SUPERVISOR: BRENT PRAEGITZER

STATE OF CALIFORNIA - DEPARTMENT OF TRANSPORTATION
Caltrans

LAST REVISION 12-22-09 | DATE PLOTTED => 04-FEB-2010 | TIME PLOTTED => 08:39

Dist	COUNTY	ROUTE	POST MILES TOTAL PROJECT	SHEET No.	TOTAL SHEETS
12	Ora	22,405, 605	R0.3/R0.9, 22.3/24.0,3.0/R1.6	1187	1929

REGISTERED CIVIL ENGINEER 8/10/09 DATE

2-1-10
PLANS APPROVAL DATE

REGISTERED PROFESSIONAL ENGINEER DENWUN LIN No. C46719 Exp. 6/30/11 CIVIL STATE OF CALIFORNIA

THE STATE OF CALIFORNIA OR ITS OFFICERS OR AGENTS SHALL NOT BE RESPONSIBLE FOR THE ACCURACY OR COMPLETENESS OF ELECTRONIC COPIES OF THIS PLAN SHEET.

LIN CONSULTING, INC.
1432 EDINGER AVE. #230
TUSTIN, CA 92780

ORANGE COUNTY
TRANSPORTATION AUTHORITY
550 S. MAIN STREET
ORANGE, CA 92863-1584

NOTE:

FOR COMPLETE RIGHT OF WAY AND ACCURATE ACCESS DATA, SEE RIGHT OF WAY RECORD MAPS AT DISTRICT OFFICE.

CONSTRUCTION NOTES:(FOR SHEETS E-1 TO E-60 ONLY)

1. INSTALL CONDUIT RISER.
2. SEE SHEET E-63 FOR THE RELOCATED OF 120/240 V METERED SERVICE IN TYPE III-CF EQUIPMENT ENCLOSURE WITH TYPE V PHOTOELECTRIC CONTROL ON NEW FOUNDATION .
   METER#1: (ID#12-55-405-0-022.680)
   METER#2: (ID#12-55-405-0-022.681)
3. EXISTING 120/240 V METERED SERVICE IN TYPE III-BF EQUIPMENT ENCLOSURE WITH TYPE V PHOTOELECTRIC CONTROL IN-PLACE. (ID# 12-55-405-0-022.710)
4. INSTALL 120/240 V METERED SERVICE IN TYPE III-CF SERVICE EQUIPMENT ENCLOSURE WITH TYPE V PHOTOELECTRIC CONTROL.
   METER#1: (ID#12-55-405-0-22.760)
   100 A, 240 V, 2P MAIN CB
   30 A, 240 V, 2P, CB LIGHTING (CK No. 6)
   30 A, 240 V, 2P, CB LIGHTING (CK No. 7)
   15 A, 120 V, 1P, CB LIGHTING CONTROL
   METER#2: (ID#12-55-405-0-22.761)
   100 A, 240 V, 2P MAIN CB
   30 A, 120 V, 1P, CB TRAFFIC MONITORING STATION (MSID 2241)
   30 A, 120 V, 1P, CB TRAFFIC MONITORING STATION (MSID 5048)
5. EXISTING 120/240 V METERED SERVICE IN TYPE III-BF EQUIPMENT ENCLOSURE WITH TYPE V PHOTOELECTRIC CONTROL IN-PLACE. (ID# 12-55-405-0-021.783)
6. SEE SHEET E-68 FOR THE RELOCATION OF 480 V METERED SERVICE IN TYPE III-CF EQUIPMENT ENCLOSURE WITH TYPE V PHOTOELECTRIC CONTROL ON NEW FOUNDATION.
   (ID# 12-55-405-0-023.760)
7. EXISTING 120/240 V UNMETERED SERVICE IN TYPE III-BF EQUIPMENT ENCLOSURE WITH STEP DOWN TRANSFORMER IN-PLACE. (ID# 07-55-091-0-001.251)
8. EXISTING 120/240 V METERED TYPE E SERVICE EQUIPMENT IN-PLACE.
9. INSTALL 3" CONDUIT PER POWER COMPANY'S REQUIREMENT. CONDUCTORS TO BE INSTALLED BY POWER COMPANY.
10. EXISTING 120/240 V METERED SERVICE IN TYPE III-CF EQUIPMENT ENCLOSURE WITH TYPE V PHOTOELECTRIC CONTROL IN-PLACE.
    (ID# 12-55-405-0-22.760)
    (ID# 12-55-405-0-22.761)
11. EXISTING 120/240 V METERED SERVICE IN TYPE III-CF EQUIPMENT ENCLOSURE WITH TYPE V PHOTOELECTRIC CONTROL IN-PLACE.
    (ID# 12-55-405-0-022.680)
    (ID# 12-55-405-0-022.681)
12. EXISTING 480 V METERED SERVICE IN TYPE III-BF EQUIPMENT ENCLOSURE WITH TYPE V PHOTOELECTRIC CONTROL IN-PLACE. (ID# 12-55-405-0-023.760)
13. RC CONDUCTORS FROM EXISTING CONDUIT. INSTALL NEW CONDUCTORS AS SPECIFIED ON PLAN.
14. RC,RS,AB,OR PROTECT IN-PLACE PER LIGHTING AND SIGN ILLUMINATION PLAN (PERMANENT).
15. TEMPORARY WOOD POLE SHOWN ON PLAN SHALL BE 200' MAXIMUM SPACING UNLESS OTHERWISE NOTED.
16. OVERHEAD LINES MUST MAINTAIN A MINIMUM CLEARANCE OF 18' FROM PAVEMENT SURFACE FOR VEHICULAR CLEARANCE. USE DEAD-END ASSEMBLIES AS NEEDED.
17. CONDUIT OR CONDUCTOR CALLOUTS WITH PARENTHESES ARE EXISTING.
18. WHERE TEMPORARY RAILING (TYPE K) IS NOT PROVIDED, CONTRACTOR SHALL PLACE TEMPORARY WOOD POLES A MINIMUM OF 30' FROM THE ACTIVE EDGE OF TRAVEL WAY OF FREEWAY MAINLINE OR RAMPS.
19. SEE SHEET E-60 FOR 12' LUMINAIRE MAST ARM ON 40' TEMPORARY WOOD POLE INSTALLATION DETAILS.

LEGEND:(FOR SHEETS E-1 TO E-59 ONLY)

- 40' WOOD POLE WITH 12' LUMINAIRE MAST ARM AND 310 W HPS LUMINAIRE
- INSTALL 40' WOOD POLE
- EXISTING 40' WOOD POLE WITH 12' LUMINAIRE MAST ARM AND 310 W HPS LUMINAIRE
- EXISTING 40' WOOD POLE

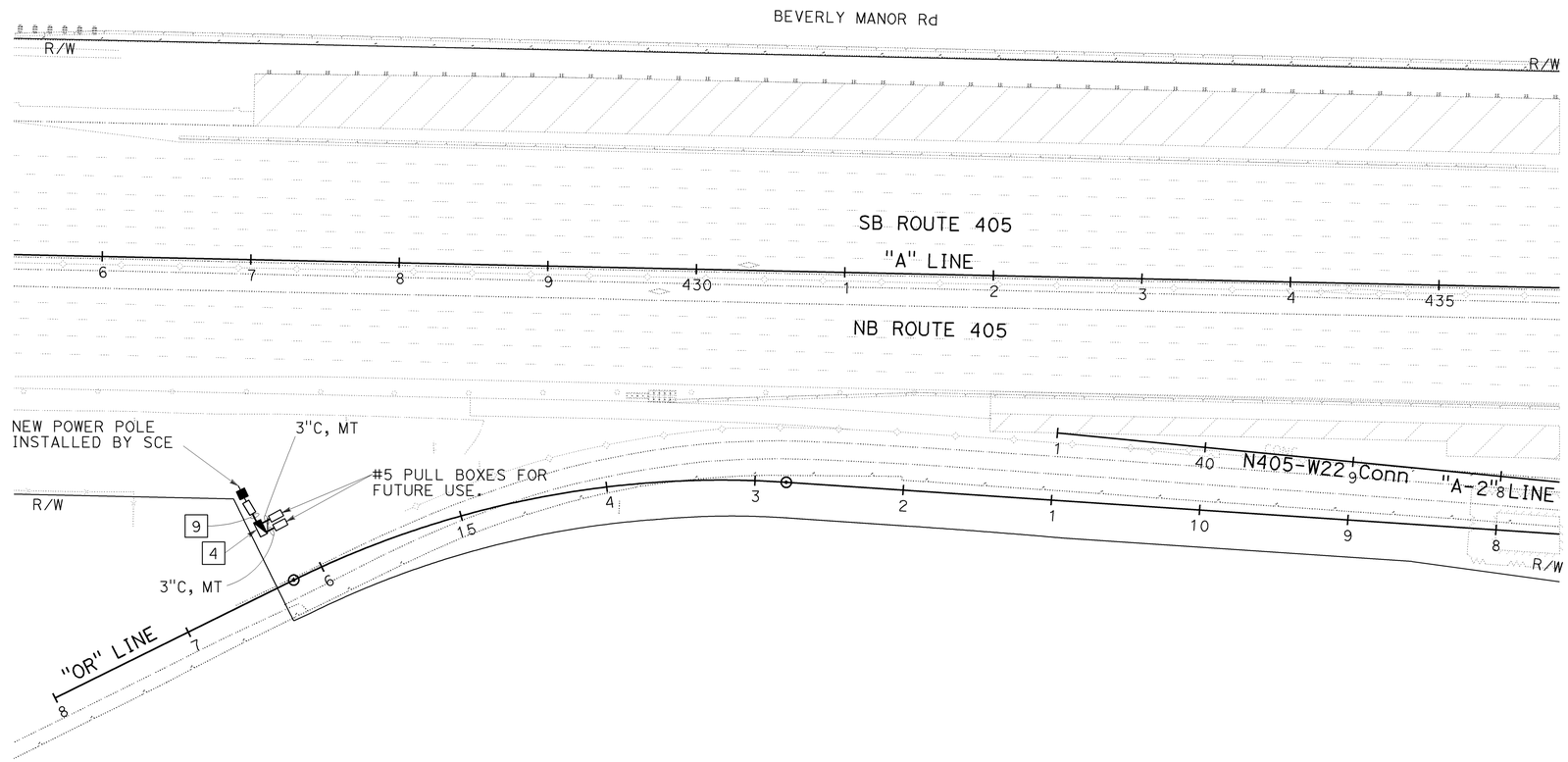

THIS PLAN IS ACCURATE FOR ELECTRICAL WORK ONLY.

TEMPORARY LIGHTING
(STAGE 1A.2)

SCALE: 1" = 50'

E-1

CW	8/10/09	REVISED BY / DATE REVISED
VICENTE ENCARNACION CHARLOTTE WU	TIMMY TO	CALCULATED-DESIGNED BY / CHECKED BY
DENWUN LIN		CONSULTANT FUNCTIONAL SUPERVISOR

STATE OF CALIFORNIA - DEPARTMENT OF TRANSPORTATION

Caltrans

LAST REVISION 08-10-09 | DATE PLOTTED => 09-FEB-2010 | TIME PLOTTED => 08:40

Dist	COUNTY	ROUTE	POST MILES TOTAL PROJECT	SHEET No.	TOTAL SHEETS
12	Ora	22,405, 605	R0.3/R0.9, 22.3/24.0,3.0/R1.6	1188	1929

REGISTERED CIVIL ENGINEER — DATE 8/10/09

2-1-10
PLANS APPROVAL DATE

REGISTERED PROFESSIONAL ENGINEER — DENWUN LIN No. C46719 Exp. 6/30/11 CIVIL — STATE OF CALIFORNIA

THE STATE OF CALIFORNIA OR ITS OFFICERS OR AGENTS SHALL NOT BE RESPONSIBLE FOR THE ACCURACY OR COMPLETENESS OF ELECTRONIC COPIES OF THIS PLAN SHEET.

LIN CONSULTING, INC.
1432 EDINGER AVE. #230
TUSTIN, CA 92780

ORANGE COUNTY
TRANSPORTATION AUTHORITY
550 S. MAIN STREET
ORANGE, CA 92863-1584

NOTE:

FOR COMPLETE RIGHT OF WAY AND ACCURATE ACCESS DATA, SEE RIGHT OF WAY RECORD MAPS AT DISTRICT OFFICE.

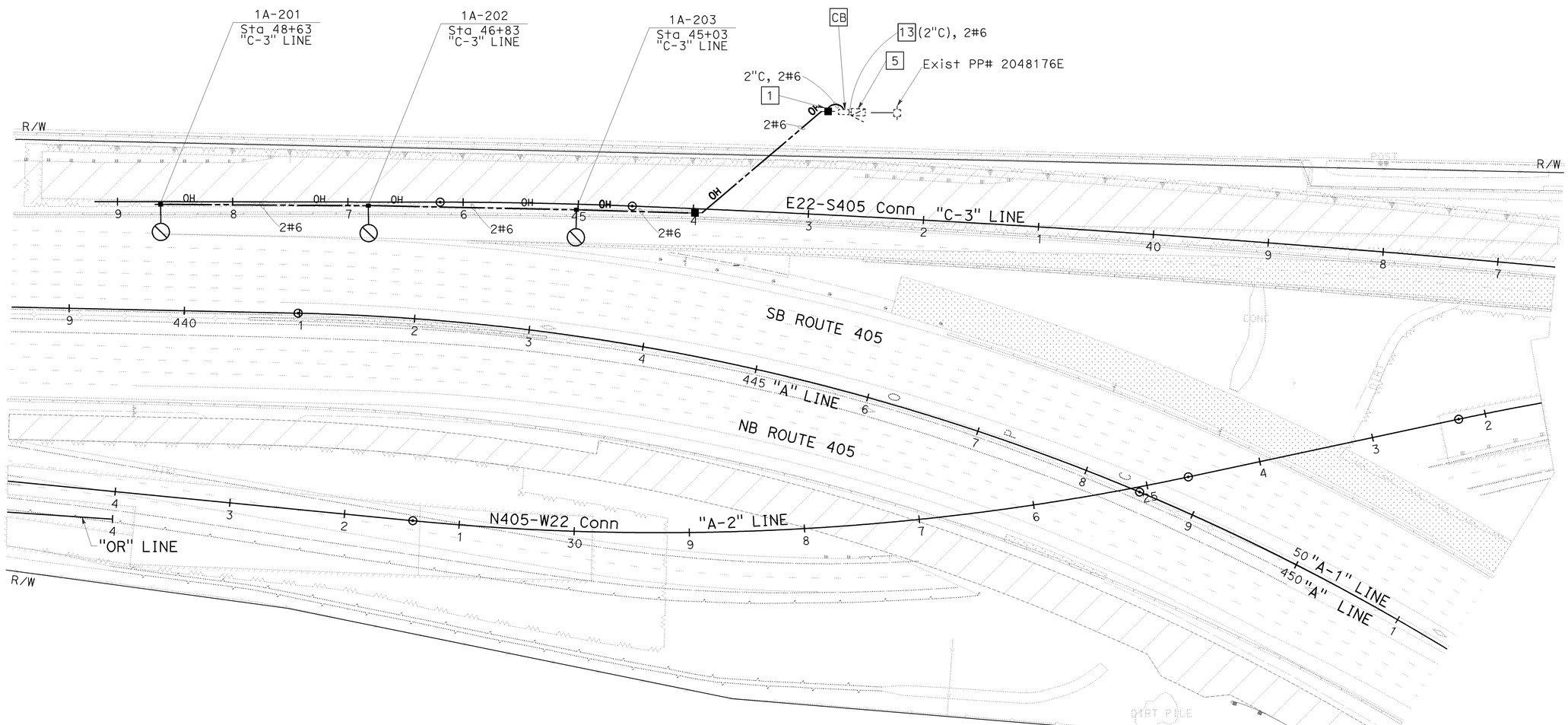

TEMPORARY LIGHTING
(STAGE 1A.2)

SCALE: 1" = 50'

E-2

FOR NOTES AND LEGEND SEE SHEET E-1.
THIS PLAN IS ACCURATE FOR ELECTRICAL WORK ONLY.

STATE OF CALIFORNIA - DEPARTMENT OF TRANSPORTATION
Caltrans

CONSULTANT FUNCTIONAL SUPERVISOR: DENWUN LIN
CALCULATED-DESIGNED BY: VICENTE ENCARNACION / CHARLOTTE WU
CHECKED BY: TIMMY TO
REVISED BY: CW
DATE REVISED: 8/10/09

LAST REVISION 08-10-09 — DATE PLOTTED => 02-FEB-2010 — TIME PLOTTED => 11:19

Dist	COUNTY	ROUTE	POST MILES TOTAL PROJECT	SHEET No.	TOTAL SHEETS
12	Ora	22,405, 605	R0.3/R0.9, 22.3/24.0,3.0/R1.6	1189	1929

REGISTERED CIVIL ENGINEER 8/10/09 DATE

2-1-10
PLANS APPROVAL DATE

REGISTERED PROFESSIONAL ENGINEER DENWUN LIN No. C46719 Exp. 6/30/11 CIVIL STATE OF CALIFORNIA

THE STATE OF CALIFORNIA OR ITS OFFICERS OR AGENTS SHALL NOT BE RESPONSIBLE FOR THE ACCURACY OR COMPLETENESS OF ELECTRONIC COPIES OF THIS PLAN SHEET.

LIN CONSULTING, INC.
1432 EDINGER AVE. #230
TUSTIN, CA 92780

ORANGE COUNTY TRANSPORTATION AUTHORITY
550 S. MAIN STREET
ORANGE, CA 92863-1584

NOTE:
FOR COMPLETE RIGHT OF WAY AND ACCURATE ACCESS DATA, SEE RIGHT OF WAY RECORD MAPS AT DISTRICT OFFICE.

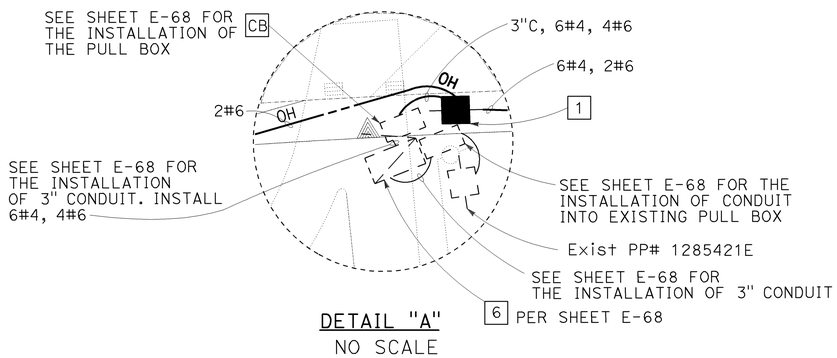

DETAIL "A"
NO SCALE

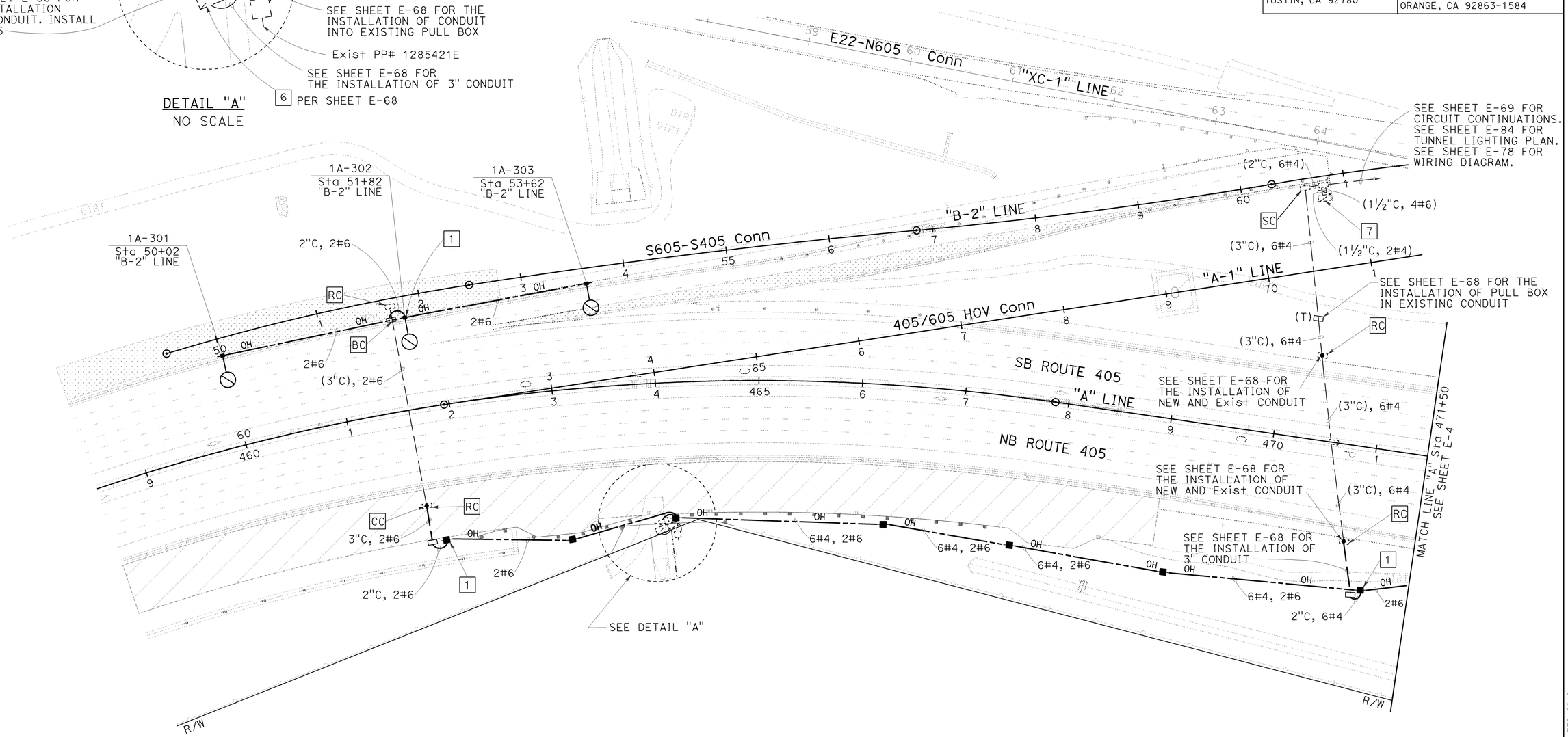

TEMPORARY LIGHTING
(STAGE 1A.2)

SCALE: 1" = 50'

E-3

FOR NOTES AND LEGEND SEE SHEET E-1.
THIS PLAN IS ACCURATE FOR ELECTRICAL WORK ONLY.

STATE OF CALIFORNIA - DEPARTMENT OF TRANSPORTATION
Caltrans

CONSULTANT FUNCTIONAL SUPERVISOR: DENWUN LIN
CALCULATED-DESIGNED BY: VICENTE ENCARNACION CHARLOTTE WU
CHECKED BY: TIMMY TO
REVISED BY: CW
DATE REVISED: 8/10/09

LAST REVISION 08-10-09 DATE PLOTTED => 09-FEB-2010 TIME PLOTTED => 08:40

Dist	COUNTY	ROUTE	POST MILES TOTAL PROJECT	SHEET No.	TOTAL SHEETS
12	Ora	22,405, 605	R0.3/R0.9, 22.3/24.0,3.0/R1.6	1190	1929

REGISTERED CIVIL ENGINEER 8/10/09 DATE

2-1-10
PLANS APPROVAL DATE

REGISTERED PROFESSIONAL ENGINEER
DENWUN LIN
No. C46719
Exp. 6/30/11
CIVIL
STATE OF CALIFORNIA

THE STATE OF CALIFORNIA OR ITS OFFICERS OR AGENTS SHALL NOT BE RESPONSIBLE FOR THE ACCURACY OR COMPLETENESS OF ELECTRONIC COPIES OF THIS PLAN SHEET.

LIN CONSULTING, INC.
1432 EDINGER AVE. #230
TUSTIN, CA 92780

ORANGE COUNTY
TRANSPORTATION AUTHORITY
550 S. MAIN STREET
ORANGE, CA 92863-1584

NOTE:
FOR COMPLETE RIGHT OF WAY AND ACCURATE ACCESS DATA, SEE RIGHT OF WAY RECORD MAPS AT DISTRICT OFFICE.

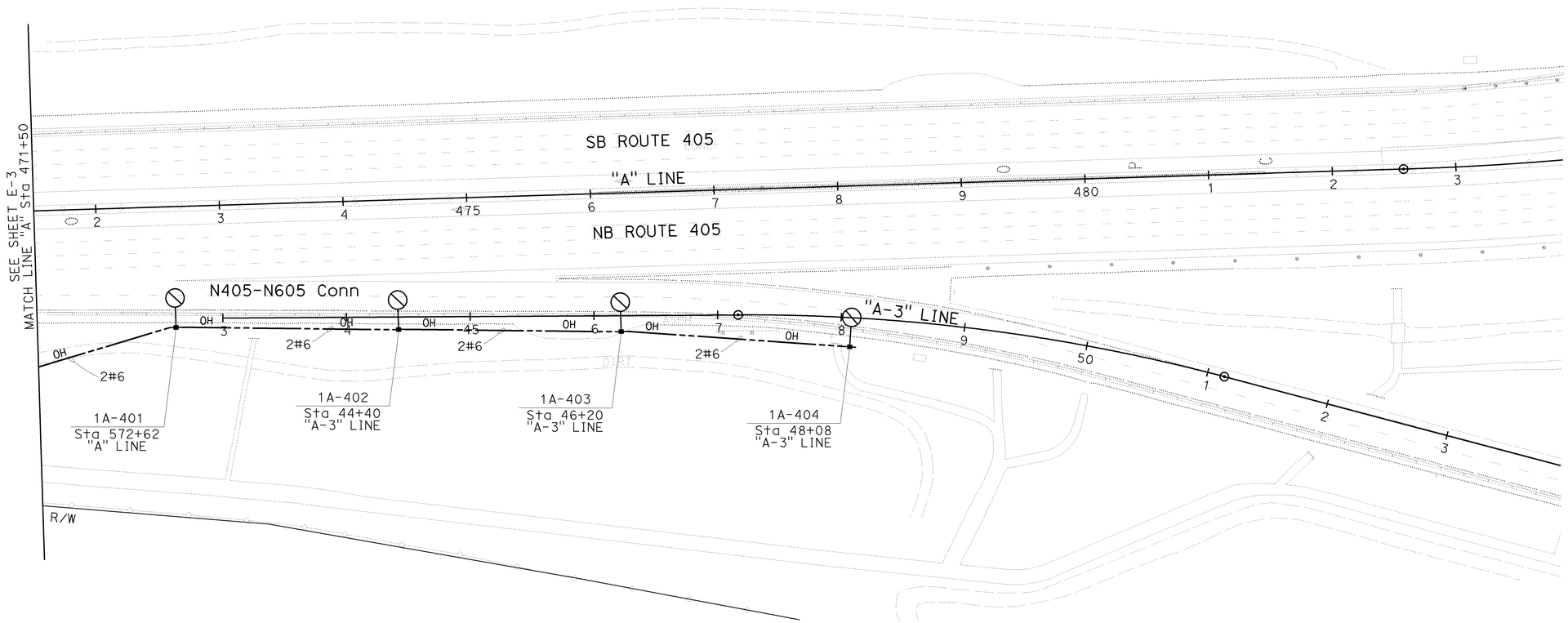

FOR NOTES AND LEGEND SEE SHEET E-1.
THIS PLAN IS ACCURATE FOR ELECTRICAL WORK ONLY.

TEMPORARY LIGHTING
(STAGE 1A.2)

SCALE: 1" = 50'

E-4

STATE OF CALIFORNIA - DEPARTMENT OF TRANSPORTATION
Caltrans

CONSULTANT FUNCTIONAL SUPERVISOR: DENWUN LIN
CALCULATED-DESIGNED BY: VICENTE ENCARNACION, CHARLOTTE WU
CHECKED BY: TIMMY TO
REVISED BY: CW
DATE REVISED: 8/10/09

LAST REVISION 08-10-09
DATE PLOTTED => 02-FEB-2010
TIME PLOTTED => 11:19

NOTE:

FOR COMPLETE RIGHT OF WAY AND ACCURATE ACCESS DATA, SEE RIGHT OF WAY RECORD MAPS AT DISTRICT OFFICE.

Dist	COUNTY	ROUTE	POST MILES TOTAL PROJECT	SHEET No.	TOTAL SHEETS
12	Ora	22,405, 605	R0.3/R0.9, 22.3/24.0,3.0/R1.6	1191	1929

REGISTERED CIVIL ENGINEER — DATE 8/10/09

2-1-10
PLANS APPROVAL DATE

REGISTERED PROFESSIONAL ENGINEER — DENWUN LIN No. C46719 Exp. 6/30/11 CIVIL — STATE OF CALIFORNIA

THE STATE OF CALIFORNIA OR ITS OFFICERS OR AGENTS SHALL NOT BE RESPONSIBLE FOR THE ACCURACY OR COMPLETENESS OF ELECTRONIC COPIES OF THIS PLAN SHEET.

LIN CONSULTING, INC.
1432 EDINGER AVE. #230
TUSTIN, CA 92780

ORANGE COUNTY TRANSPORTATION AUTHORITY
550 S. MAIN STREET
ORANGE, CA 92863-1584

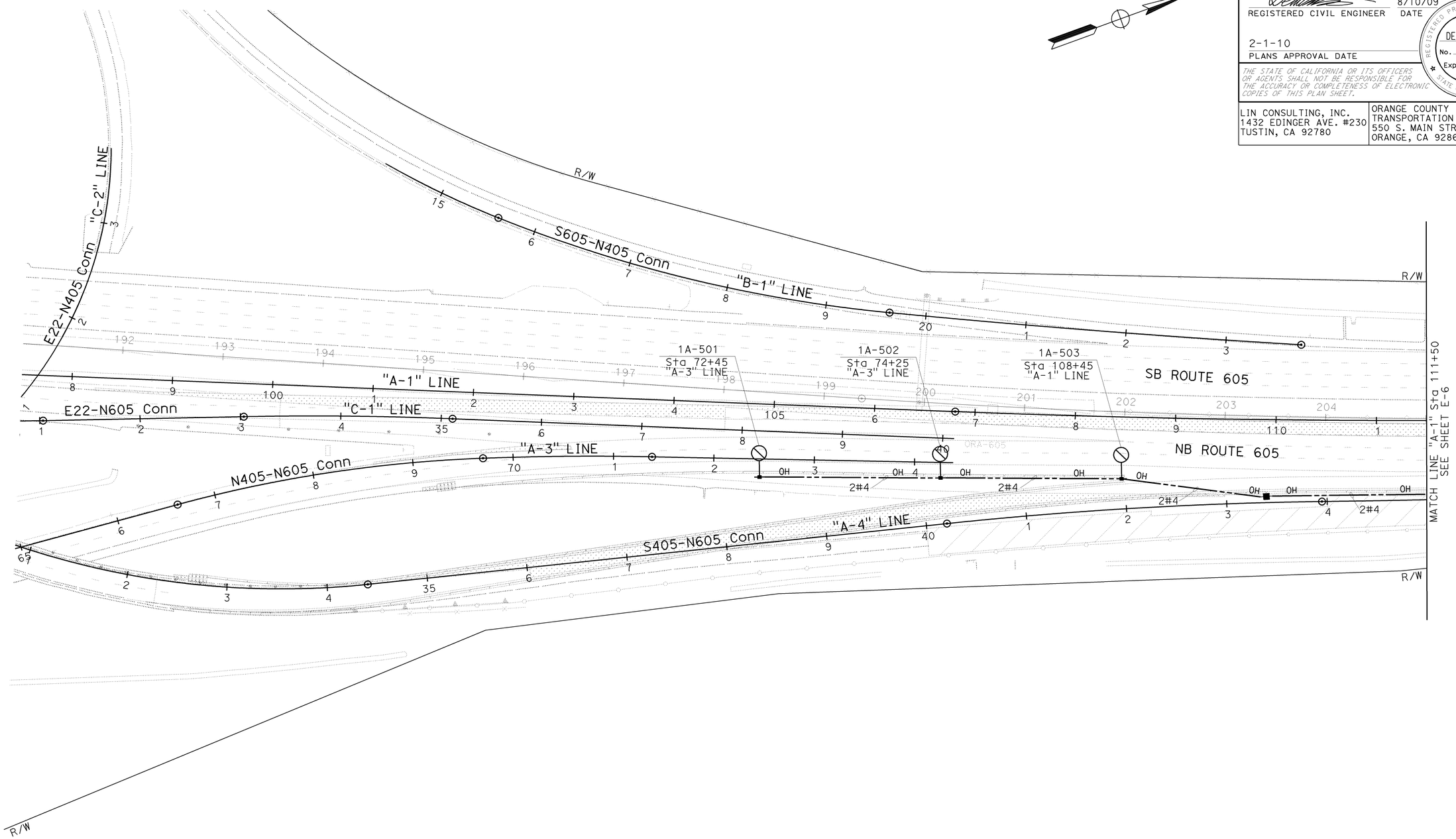

FOR NOTES AND LEGEND SEE SHEET E-1.
THIS PLAN IS ACCURATE FOR ELECTRICAL WORK ONLY.

TEMPORARY LIGHTING
(STAGE 1A.2)

SCALE 1"=50'

E-5

STATE OF CALIFORNIA - DEPARTMENT OF TRANSPORTATION

CONSULTANT FUNCTIONAL SUPERVISOR: DENWUN LIN

CALCULATED-DESIGNED BY: VICENTE ENCARNACION, CHARLOTTE WU

CHECKED BY: TIMMY TO

REVISED BY: CW

DATE REVISED: 8/10/09

LAST REVISION: 08-10-09

DATE PLOTTED => 02-FEB-2010
TIME PLOTTED => 11:19

Dist	COUNTY	ROUTE	POST MILES TOTAL PROJECT	SHEET No.	TOTAL SHEETS
12	Ora	22,405, 605	R0.3/R0.9, 22.3/24.0,3.0/R1.6	1192	1929

REGISTERED CIVIL ENGINEER 8/10/09 DATE

2-1-10
PLANS APPROVAL DATE

REGISTERED PROFESSIONAL ENGINEER DENWUN LIN No. C46719 Exp. 6/30/11 CIVIL STATE OF CALIFORNIA

THE STATE OF CALIFORNIA OR ITS OFFICERS OR AGENTS SHALL NOT BE RESPONSIBLE FOR THE ACCURACY OR COMPLETENESS OF ELECTRONIC COPIES OF THIS PLAN SHEET.

LIN CONSULTING, INC.
1432 EDINGER AVE. #230
TUSTIN, CA 92780

ORANGE COUNTY
TRANSPORTATION AUTHORITY
550 S. MAIN STREET
ORANGE, CA 92863-1584

NOTE:

FOR COMPLETE RIGHT OF WAY AND ACCURATE ACCESS DATA, SEE RIGHT OF WAY RECORD MAPS AT DISTRICT OFFICE.

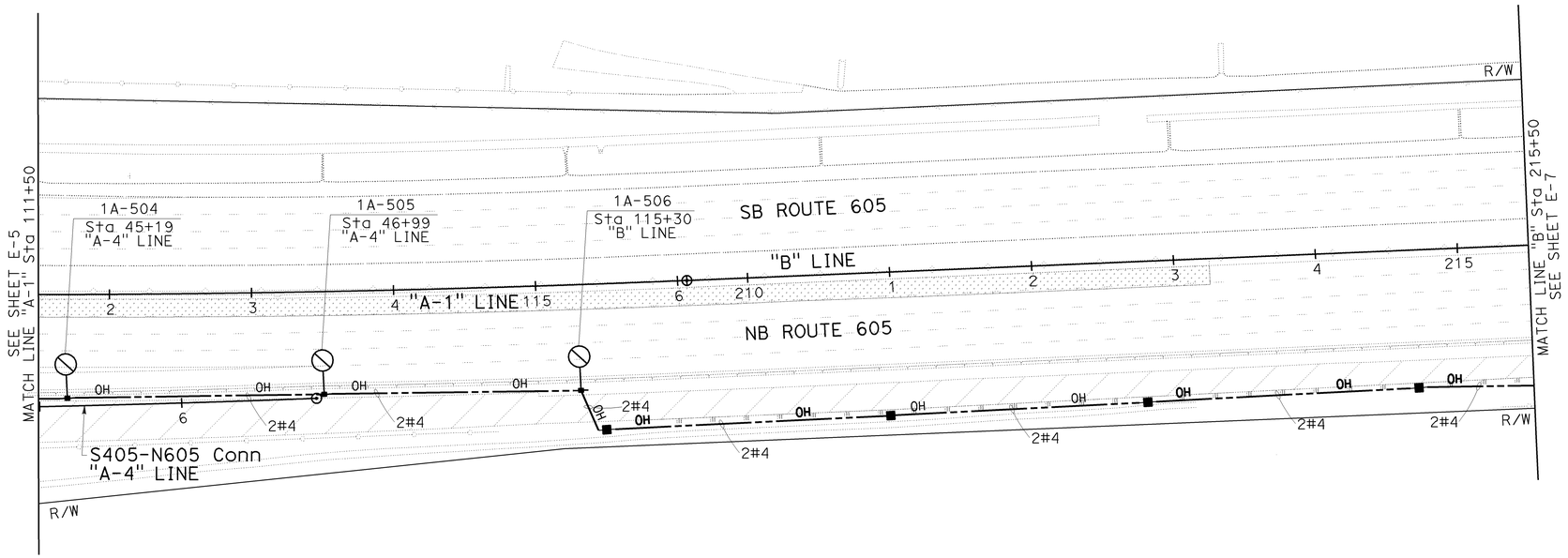

FOR NOTES AND LEGEND SEE SHEET E-1.
THIS PLAN IS ACCURATE FOR ELECTRICAL WORK ONLY.

TEMPORARY LIGHTING
(STAGE 1A.2)

SCALE 1"=50'

E-6

STATE OF CALIFORNIA - DEPARTMENT OF TRANSPORTATION
Caltrans

CONSULTANT FUNCTIONAL SUPERVISOR: DENWUN LIN
CALCULATED-DESIGNED BY: VICENTE ENCARNACION, CHARLOTTE WU
CHECKED BY: TIMMY TO
REVISED BY: CW
DATE REVISED: 8/10/09

LAST REVISION 08-10-09
DATE PLOTTED => 02-FEB-2010
TIME PLOTTED => 11:19

Dist	COUNTY	ROUTE	POST MILES TOTAL PROJECT	SHEET No.	TOTAL SHEETS
12	Ora	22,405, 605	R0.3/R0.9, 22.3/24.0,3.0/R1.6	1193	1929

REGISTERED CIVIL ENGINEER 8/10/09 DATE

2-1-10
PLANS APPROVAL DATE

REGISTERED PROFESSIONAL ENGINEER
DENWUN LIN
No. C46719
Exp. 6/30/11
CIVIL
STATE OF CALIFORNIA

THE STATE OF CALIFORNIA OR ITS OFFICERS OR AGENTS SHALL NOT BE RESPONSIBLE FOR THE ACCURACY OR COMPLETENESS OF ELECTRONIC COPIES OF THIS PLAN SHEET.

LIN CONSULTING, INC.
1432 EDINGER AVE. #230
TUSTIN, CA 92780

ORANGE COUNTY
TRANSPORTATION AUTHORITY
550 S. MAIN STREET
ORANGE, CA 92863-1584

NOTE:

FOR COMPLETE RIGHT OF WAY AND ACCURATE ACCESS DATA, SEE RIGHT OF WAY RECORD MAPS AT DISTRICT OFFICE.

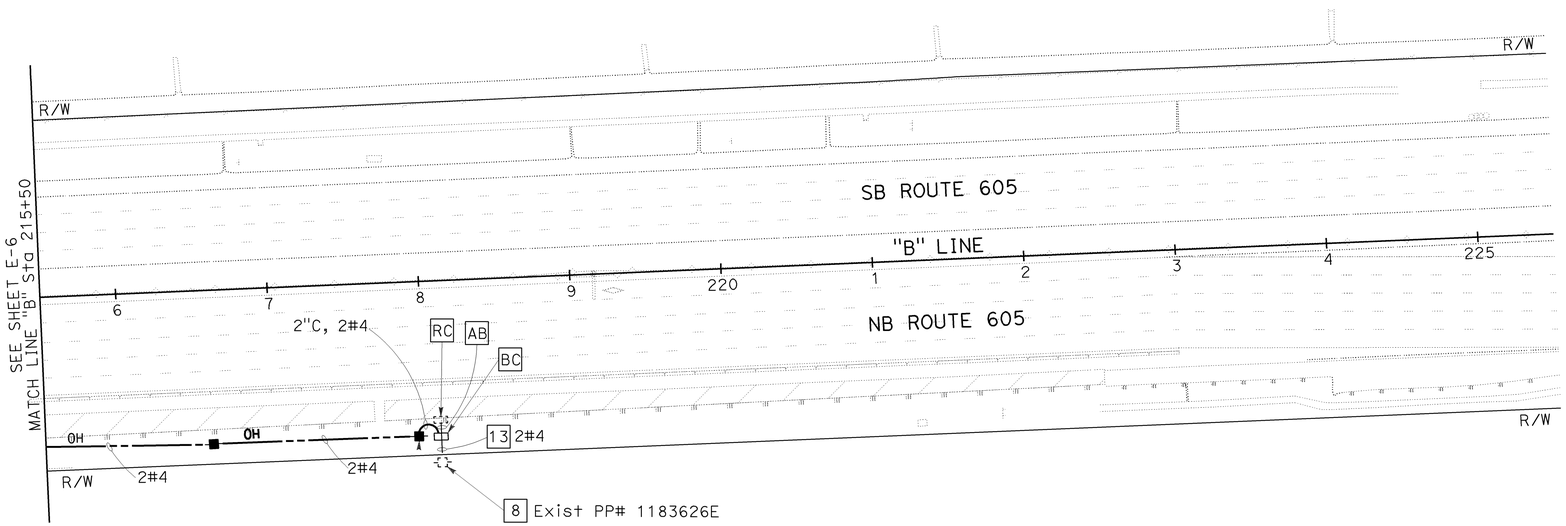

FOR NOTES AND LEGEND SEE SHEET E-1.
THIS PLAN IS ACCURATE FOR ELECTRICAL WORK ONLY.

TEMPORARY LIGHTING
(STAGE 1A.2)

SCALE 1"=50'

E-7

STATE OF CALIFORNIA - DEPARTMENT OF TRANSPORTATION
Caltrans

CONSULTANT FUNCTIONAL SUPERVISOR: DENWUN LIN
CALCULATED-DESIGNED BY: VICENTE ENCARNACION, CHARLOTTE WU
CHECKED BY: TIMMY TO
REVISED BY: CW
DATE REVISED: 8/10/09

LAST REVISION 08-10-09 DATE PLOTTED => 02-FEB-2010 TIME PLOTTED => 11:19

Dist	COUNTY	ROUTE	POST MILES TOTAL PROJECT	SHEET No.	TOTAL SHEETS
12	Ora	22,405, 605	R0.3/R0.9, 22.3/24.0,3.0/R1.6	1194	1929

REGISTERED CIVIL ENGINEER 8/10/09 DATE

2-1-10
PLANS APPROVAL DATE

REGISTERED PROFESSIONAL ENGINEER DENWUN LIN No. C46719 Exp. 6/30/11 CIVIL STATE OF CALIFORNIA

THE STATE OF CALIFORNIA OR ITS OFFICERS OR AGENTS SHALL NOT BE RESPONSIBLE FOR THE ACCURACY OR COMPLETENESS OF ELECTRONIC COPIES OF THIS PLAN SHEET.

LIN CONSULTING, INC.
1432 EDINGER AVE. #230
TUSTIN, CA 92780

ORANGE COUNTY
TRANSPORTATION AUTHORITY
550 S. MAIN STREET
ORANGE, CA 92863-1584

NOTE:

FOR COMPLETE RIGHT OF WAY AND ACCURATE ACCESS DATA, SEE RIGHT OF WAY RECORD MAPS AT DISTRICT OFFICE.

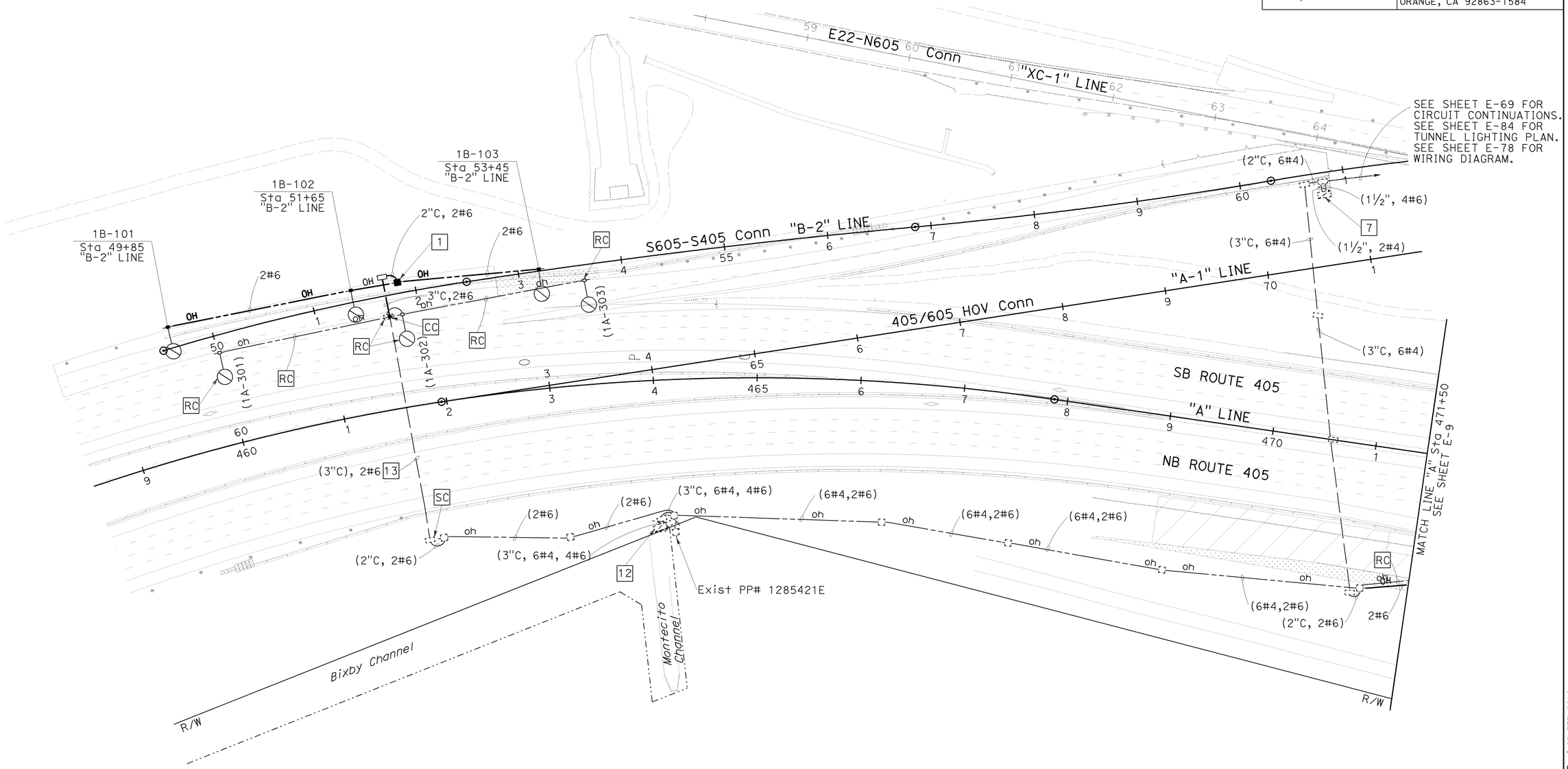

FOR NOTES AND LEGEND SEE SHEET E-1.
THIS PLAN IS ACCURATE FOR ELECTRICAL WORK ONLY.

TEMPORARY LIGHTING
(STAGE 1B.1)

SCALE 1"=50'

E-8

REVISED BY	DATE REVISED
CW	8/10/09

CALCULATED-DESIGNED BY: VICENTE ENCARNACION / CHARLOTTE WU
CHECKED BY: TIMMY TO
CONSULTANT FUNCTIONAL SUPERVISOR: DENWUN LIN

STATE OF CALIFORNIA - DEPARTMENT OF TRANSPORTATION
Caltrans

LAST REVISION 08-10-09 | DATE PLOTTED => 02-FEB-2010 | TIME PLOTTED => 11:19

Dist	COUNTY	ROUTE	POST MILES TOTAL PROJECT	SHEET No.	TOTAL SHEETS
12	Ora	22,405, 605	R0.3/R0.9, 22.3/24.0,3.0/R1.6	1195	1929

REGISTERED CIVIL ENGINEER 8/10/09 DATE

2-1-10
PLANS APPROVAL DATE

REGISTERED PROFESSIONAL ENGINEER
DENWUN LIN
No. C46719
Exp. 6/30/11
CIVIL
STATE OF CALIFORNIA

THE STATE OF CALIFORNIA OR ITS OFFICERS OR AGENTS SHALL NOT BE RESPONSIBLE FOR THE ACCURACY OR COMPLETENESS OF ELECTRONIC COPIES OF THIS PLAN SHEET.

LIN CONSULTING, INC.
1432 EDINGER AVE. #230
TUSTIN, CA 92780

ORANGE COUNTY
TRANSPORTATION AUTHORITY
550 S. MAIN STREET
ORANGE, CA 92863-1584

NOTE:

FOR COMPLETE RIGHT OF WAY AND ACCURATE ACCESS DATA, SEE RIGHT OF WAY RECORD MAPS AT DISTRICT OFFICE.

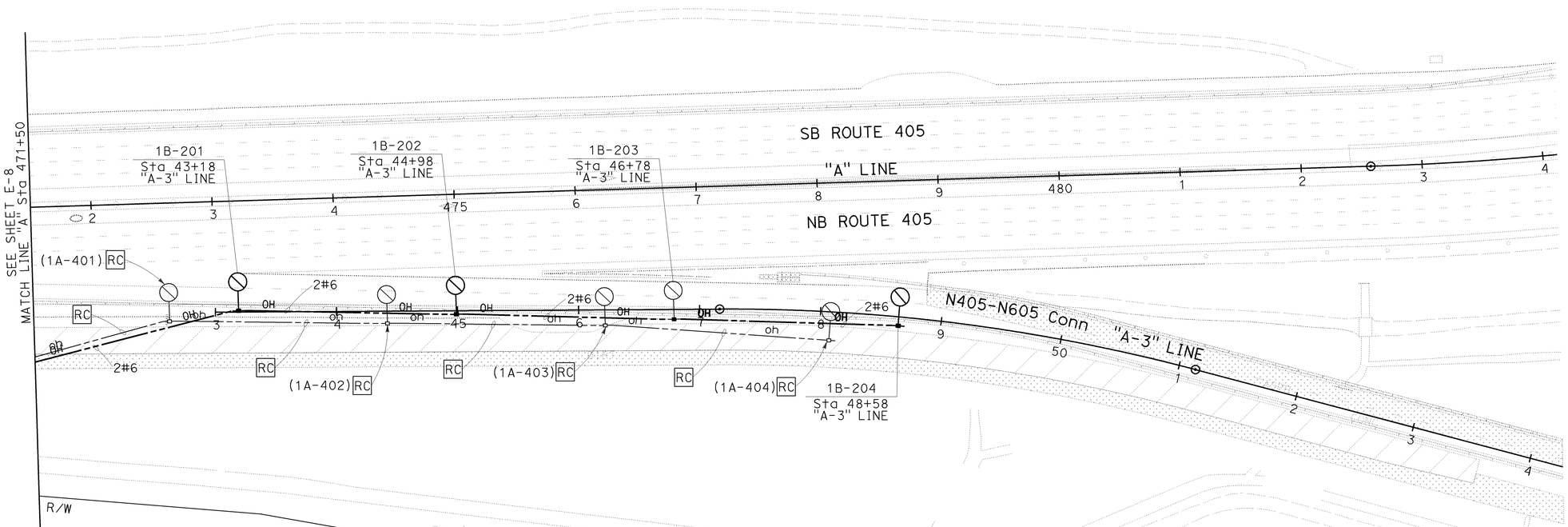

FOR NOTES AND LEGEND SEE SHEET E-1.
THIS PLAN IS ACCURATE FOR ELECTRICAL WORK ONLY.

TEMPORARY LIGHTING
(STAGE 1B.1)

SCALE 1"=50'

E-9

STATE OF CALIFORNIA - DEPARTMENT OF TRANSPORTATION	CONSULTANT FUNCTIONAL SUPERVISOR	CALCULATED-DESIGNED BY	REVISED BY
Caltrans	DENWUN LIN	CHECKED BY	DATE REVISED
	VICENTE ENCARNACION CHARLOTTE WU	TIMMY TO	CW 8/10/09

LAST REVISION 08-10-09 DATE PLOTTED => 02-FEB-2010 TIME PLOTTED => 11:20

Dist	COUNTY	ROUTE	POST MILES TOTAL PROJECT	SHEET No.	TOTAL SHEETS
12	Ora	22,405, 605	R0.3/R0.9, 22.3/24.0,3.0/R1.6	1196	1929

REGISTERED CIVIL ENGINEER 8/10/09 DATE

2-1-10
PLANS APPROVAL DATE

REGISTERED PROFESSIONAL ENGINEER DENWUN LIN No. C46719 Exp. 6/30/11 CIVIL STATE OF CALIFORNIA

THE STATE OF CALIFORNIA OR ITS OFFICERS OR AGENTS SHALL NOT BE RESPONSIBLE FOR THE ACCURACY OR COMPLETENESS OF ELECTRONIC COPIES OF THIS PLAN SHEET.

LIN CONSULTING, INC.
1432 EDINGER AVE. #230
TUSTIN, CA 92780

ORANGE COUNTY
TRANSPORTATION AUTHORITY
550 S. MAIN STREET
ORANGE, CA 92863-1584

NOTE:

FOR COMPLETE RIGHT OF WAY AND ACCURATE ACCESS DATA, SEE RIGHT OF WAY RECORD MAPS AT DISTRICT OFFICE.

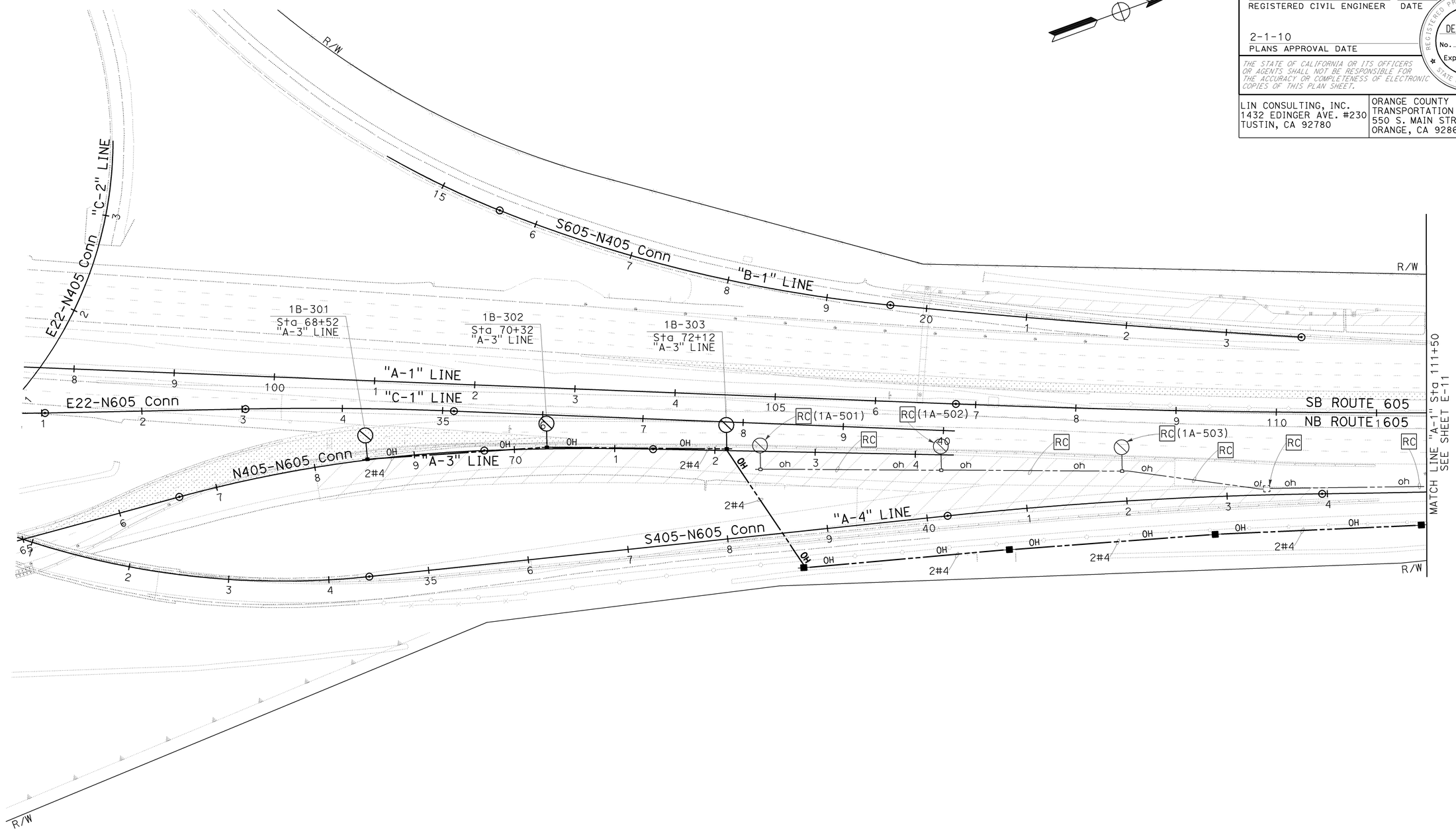

FOR NOTES AND LEGEND SEE SHEET E-1.
THIS PLAN IS ACCURATE FOR ELECTRICAL WORK ONLY.

TEMPORARY LIGHTING
(STAGE 1B.1)

SCALE 1"=50'

E-10

STATE OF CALIFORNIA - DEPARTMENT OF TRANSPORTATION
Caltrans

CONSULTANT FUNCTIONAL SUPERVISOR: DENWUN LIN
CALCULATED-DESIGNED BY: VICENTE ENCARNACION / CHARLOTTE WU
CHECKED BY: TIMMY TO
REVISED BY: CW
DATE REVISED: 8/10/09

LAST REVISION 08-10-09
DATE PLOTTED => 09-FEB-2010
TIME PLOTTED => 08:41

BORDER LAST REVISED 8/1/2008
RELATIVE BORDER SCALE IS IN INCHES 0 1 2 3
USERNAME => trmikesl
DGN FILE => c07163ug010.dgn
CU 12235
EA 071631

Dist	COUNTY	ROUTE	POST MILES TOTAL PROJECT	SHEET No.	TOTAL SHEETS
12	Ora	22,405, 605	R0.3/R0.9, 22.3/24.0,3.0/R1.6	1197	1929

REGISTERED CIVIL ENGINEER 8/10/09 DATE

2-1-10
PLANS APPROVAL DATE

REGISTERED PROFESSIONAL ENGINEER DENWUN LIN No. C46719 Exp. 6/30/11 CIVIL STATE OF CALIFORNIA

THE STATE OF CALIFORNIA OR ITS OFFICERS OR AGENTS SHALL NOT BE RESPONSIBLE FOR THE ACCURACY OR COMPLETENESS OF ELECTRONIC COPIES OF THIS PLAN SHEET.

LIN CONSULTING, INC.
1432 EDINGER AVE. #230
TUSTIN, CA 92780

ORANGE COUNTY
TRANSPORTATION AUTHORITY
550 S. MAIN STREET
ORANGE, CA 92863-1584

NOTE:

FOR COMPLETE RIGHT OF WAY AND ACCURATE ACCESS DATA, SEE RIGHT OF WAY RECORD MAPS AT DISTRICT OFFICE.

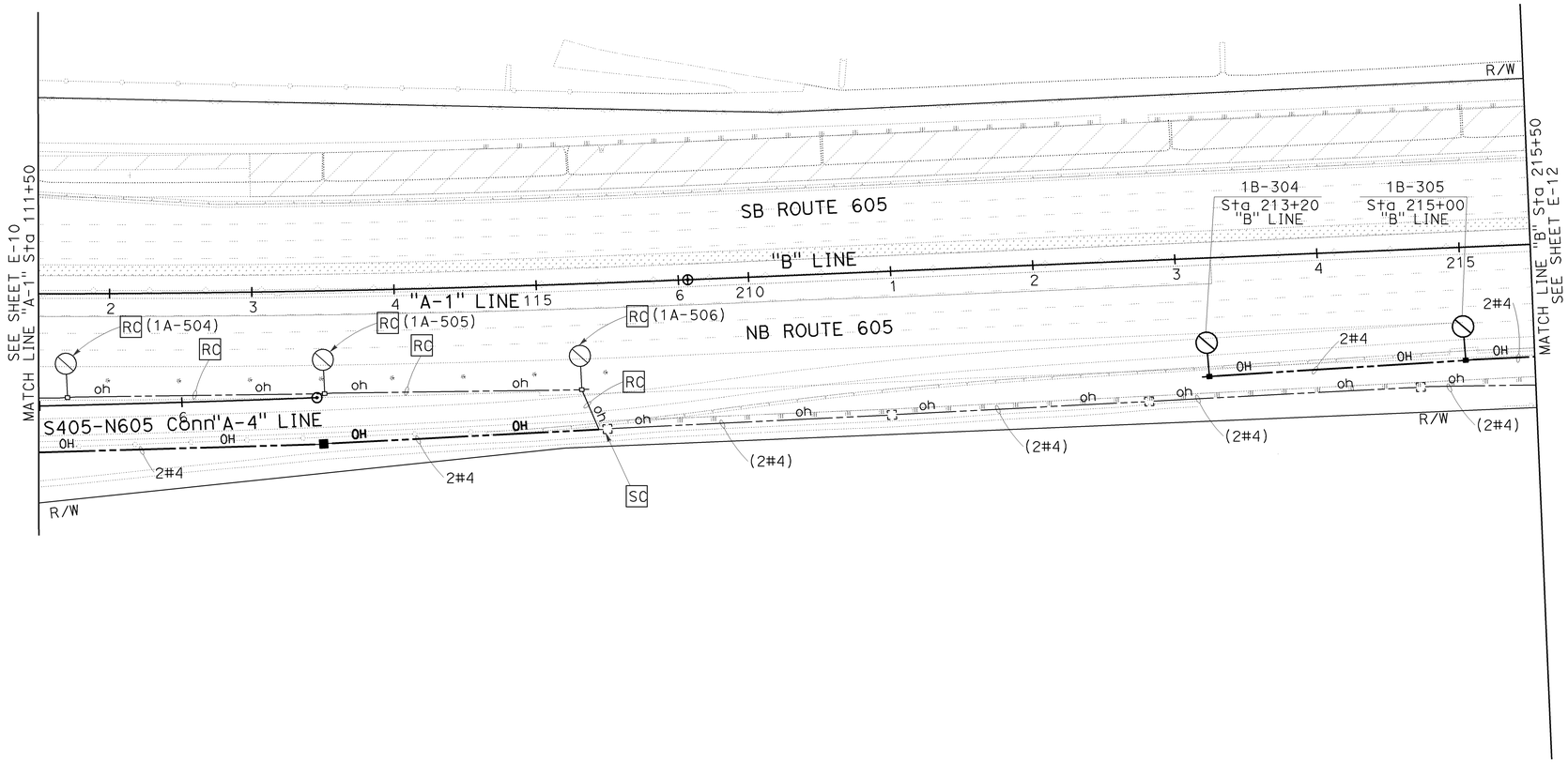

FOR NOTES AND LEGEND SEE SHEET E-1.
THIS PLAN IS ACCURATE FOR ELECTRICAL WORK ONLY.

TEMPORARY LIGHTING
(STAGE 1B.1)

SCALE 1"=50'

E-11

STATE OF CALIFORNIA - DEPARTMENT OF TRANSPORTATION
Caltrans

CONSULTANT FUNCTIONAL SUPERVISOR: DENWUN LIN
CALCULATED-DESIGNED BY: VICENTE ENCARNACION CHARLOTTE WU
CHECKED BY: TIMMY TO
REVISED BY: CW
DATE REVISED: 8/10/09

LAST REVISION 08-10-09 DATE PLOTTED => 02-FEB-2010 TIME PLOTTED => 11:20

Dist	COUNTY	ROUTE	POST MILES TOTAL PROJECT	SHEET No.	TOTAL SHEETS
12	Ora	22,405, 605	R0.3/R0.9, 22.3/24.0,3.0/R1.6	1198	1929

REGISTERED CIVIL ENGINEER 8/10/09 DATE

2-1-10
PLANS APPROVAL DATE

REGISTERED PROFESSIONAL ENGINEER DENWUN LIN No. C46719 Exp. 6/30/11 CIVIL STATE OF CALIFORNIA

THE STATE OF CALIFORNIA OR ITS OFFICERS OR AGENTS SHALL NOT BE RESPONSIBLE FOR THE ACCURACY OR COMPLETENESS OF ELECTRONIC COPIES OF THIS PLAN SHEET.

LIN CONSULTING, INC.
1432 EDINGER AVE. #230
TUSTIN, CA 92780

ORANGE COUNTY
TRANSPORTATION AUTHORITY
550 S. MAIN STREET
ORANGE, CA 92863-1584

NOTE:

FOR COMPLETE RIGHT OF WAY AND ACCURATE ACCESS DATA, SEE RIGHT OF WAY RECORD MAPS AT DISTRICT OFFICE.

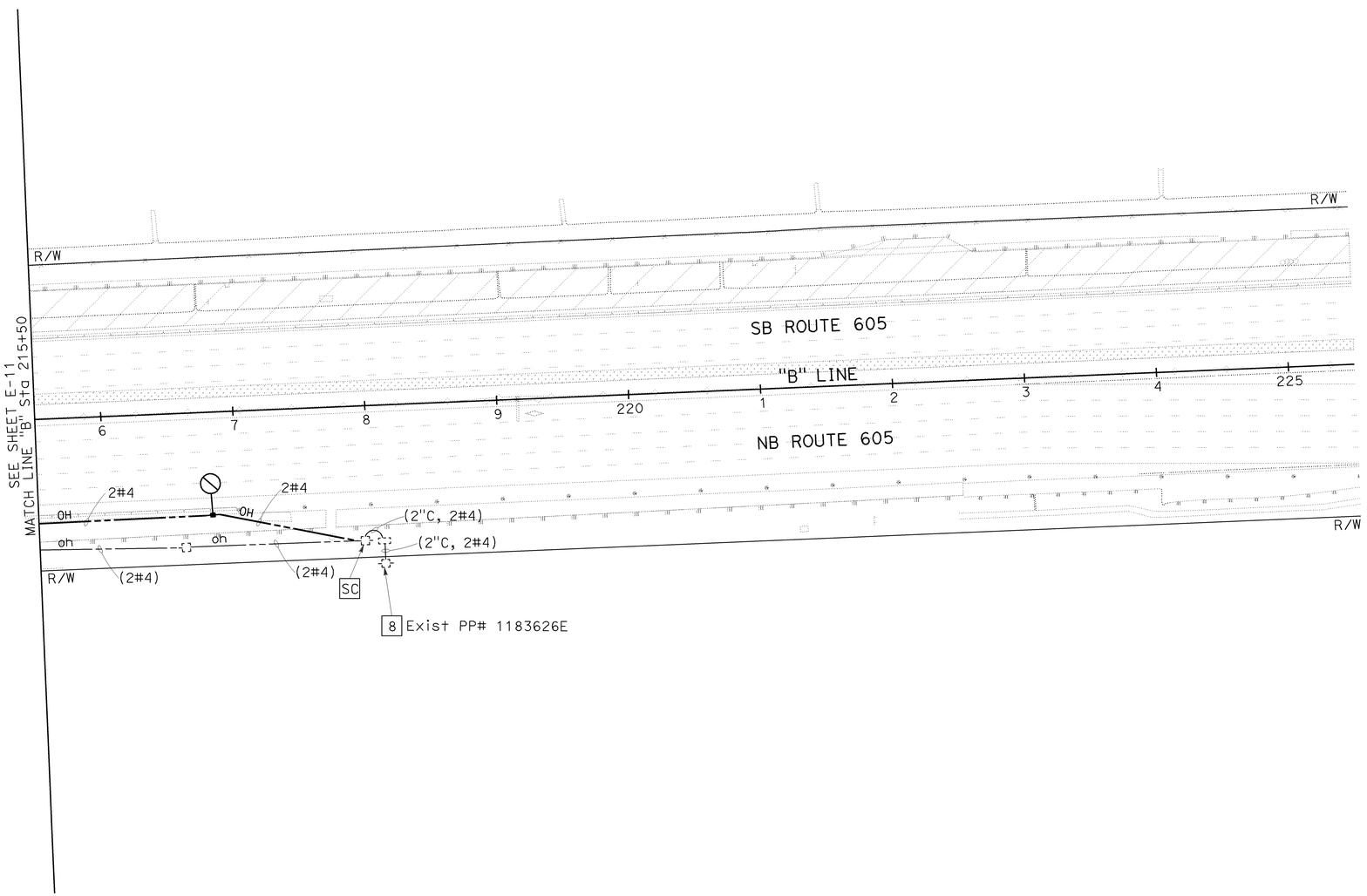

FOR NOTES AND LEGEND SEE SHEET E-1.
THIS PLAN IS ACCURATE FOR ELECTRICAL WORK ONLY.

TEMPORARY LIGHTING
(STAGE 1B.1)

SCALE 1"=50'

E-12

STATE OF CALIFORNIA - DEPARTMENT OF TRANSPORTATION
Caltrans

CONSULTANT FUNCTIONAL SUPERVISOR: DENWUN LIN

CALCULATED-DESIGNED BY: VICENTE ENCARNACION CHARLOTTE WU
CHECKED BY: TIMMY TO

REVISED BY: CW
DATE REVISED: 8/10/09

LAST REVISION 08-10-09 DATE PLOTTED => 02-FEB-2010 TIME PLOTTED => 11:20

Dist	COUNTY	ROUTE	POST MILES TOTAL PROJECT	SHEET No.	TOTAL SHEETS
12	Ora	22,405, 605	R0.3/R0.9, 22.3/24.0,3.0/R1.6	1199	1929

REGISTERED CIVIL ENGINEER 8/10/09 DATE

2-1-10
PLANS APPROVAL DATE

REGISTERED PROFESSIONAL ENGINEER DENWUN LIN No. C46719 Exp. 6/30/11 CIVIL STATE OF CALIFORNIA

THE STATE OF CALIFORNIA OR ITS OFFICERS OR AGENTS SHALL NOT BE RESPONSIBLE FOR THE ACCURACY OR COMPLETENESS OF ELECTRONIC COPIES OF THIS PLAN SHEET.

LIN CONSULTING, INC.
1432 EDINGER AVE. #230
TUSTIN, CA 92780

ORANGE COUNTY
TRANSPORTATION AUTHORITY
550 S. MAIN STREET
ORANGE, CA 92863-1584

NOTE:

FOR COMPLETE RIGHT OF WAY AND ACCURATE ACCESS DATA, SEE RIGHT OF WAY RECORD MAPS AT DISTRICT OFFICE.

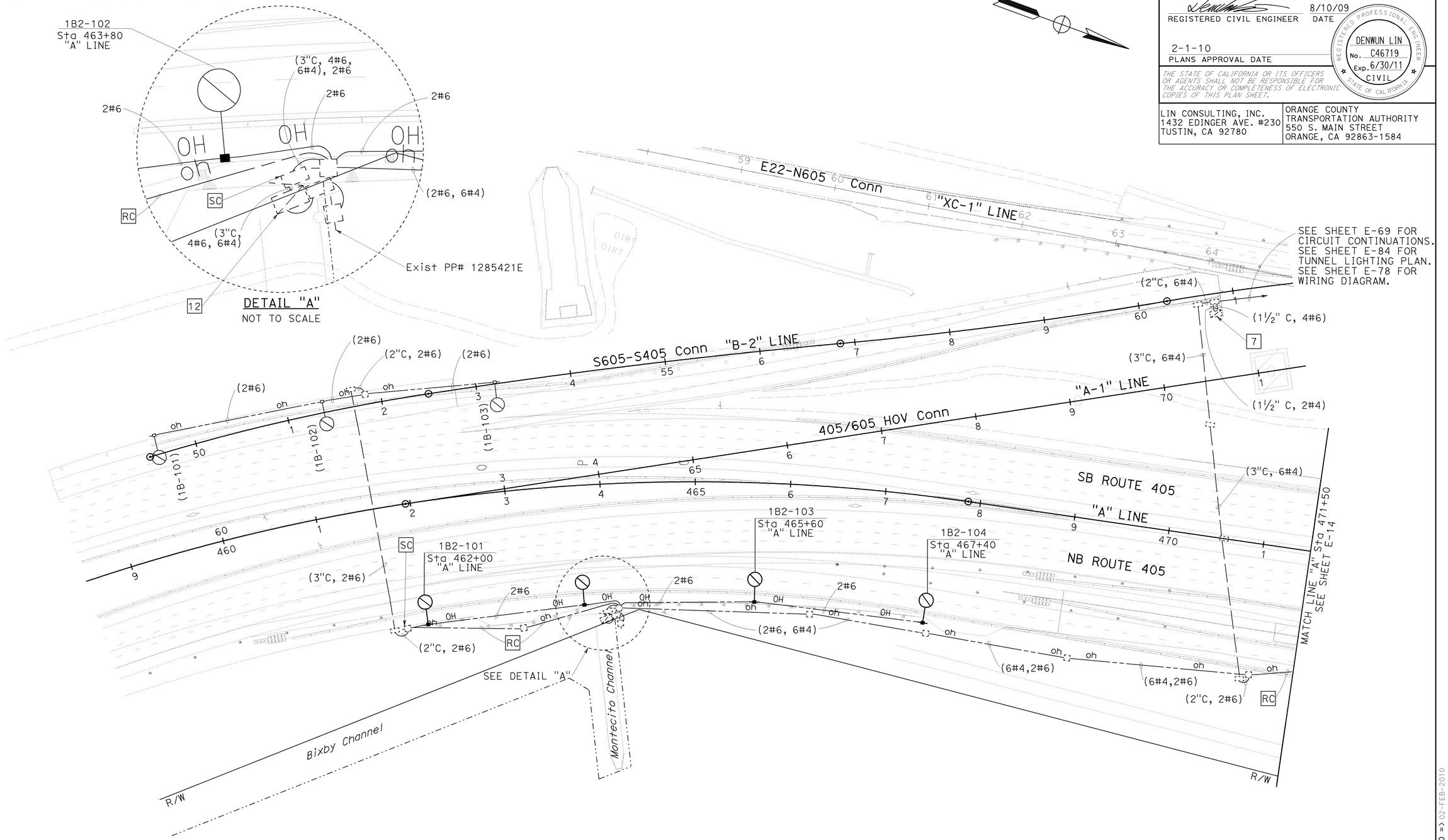

FOR NOTES AND LEGEND SEE SHEET E-1.
THIS PLAN IS ACCURATE FOR ELECTRICAL WORK ONLY.

TEMPORARY LIGHTING
(STAGE 1B.2)

SCALE 1"=50'

E-13

REVISED BY	CW
DATE REVISED	8/10/09
VICENTE ENCARNACION CHARLOTTE WU	TIMMY TO
CALCULATED-DESIGNED BY	
CHECKED BY	
CONSULTANT FUNCTIONAL SUPERVISOR	DENWUN LIN

STATE OF CALIFORNIA - DEPARTMENT OF TRANSPORTATION
Caltrans

LAST REVISION 08-10-09 DATE PLOTTED => 02-FEB-2010 TIME PLOTTED => 11:20

Dist	COUNTY	ROUTE	POST MILES TOTAL PROJECT	SHEET No.	TOTAL SHEETS
12	Ora	22,405, 605	R0.3/R0.9, 22.3/24.0,3.0/R1.6	1200	1929

REGISTERED CIVIL ENGINEER 8/10/09 DATE

2-1-10
PLANS APPROVAL DATE

REGISTERED PROFESSIONAL ENGINEER
DENWUN LIN
No. C46719
Exp. 6/30/11
CIVIL
STATE OF CALIFORNIA

THE STATE OF CALIFORNIA OR ITS OFFICERS OR AGENTS SHALL NOT BE RESPONSIBLE FOR THE ACCURACY OR COMPLETENESS OF ELECTRONIC COPIES OF THIS PLAN SHEET.

LIN CONSULTING, INC.
1432 EDINGER AVE. #230
TUSTIN, CA 92780

ORANGE COUNTY
TRANSPORTATION AUTHORITY
550 S. MAIN STREET
ORANGE, CA 92863-1584

NOTE:

FOR COMPLETE RIGHT OF WAY AND ACCURATE ACCESS DATA, SEE RIGHT OF WAY RECORD MAPS AT DISTRICT OFFICE.

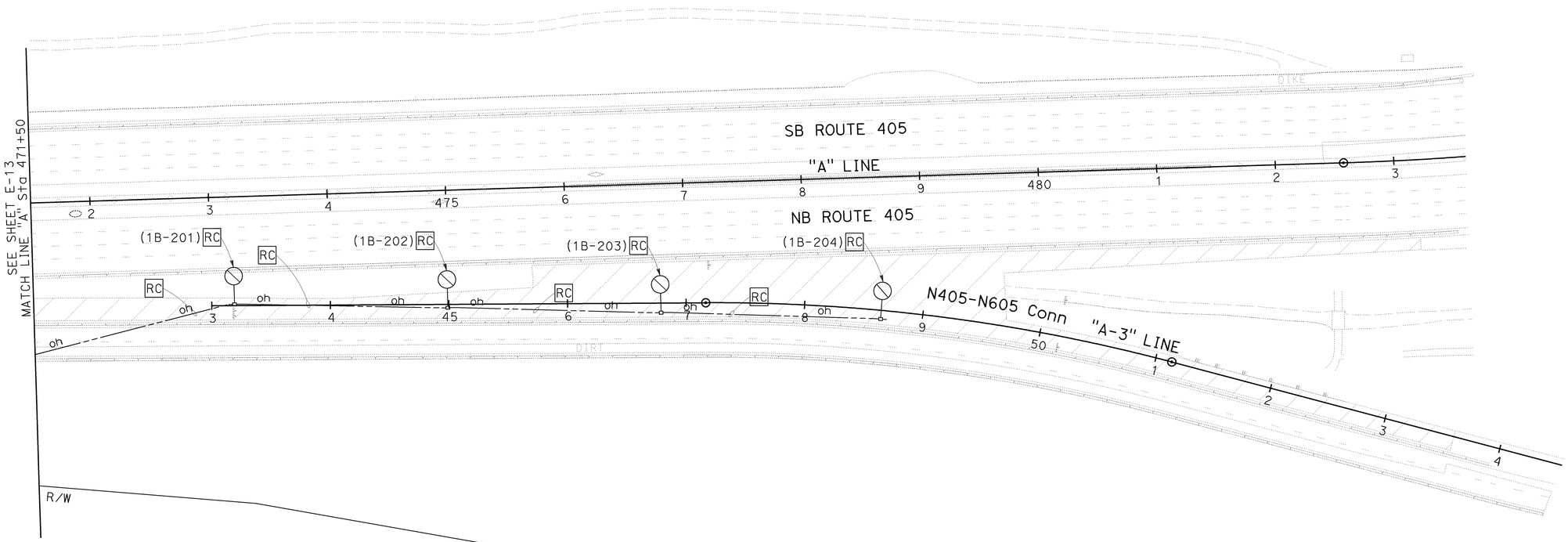

FOR NOTES AND LEGEND SEE SHEET E-1.
THIS PLAN IS ACCURATE FOR ELECTRICAL WORK ONLY.

TEMPORARY LIGHTING
(STAGE 1B.2)

SCALE 1"=50'

E-14

STATE OF CALIFORNIA - DEPARTMENT OF TRANSPORTATION
Caltrans

CONSULTANT FUNCTIONAL SUPERVISOR: DENWUN LIN
CALCULATED-DESIGNED BY: VICENTE ENCARNACION / CHARLOTTE WU
CHECKED BY: TIMMY TO
REVISED BY: CW
DATE REVISED: 8/10/09

LAST REVISION 08-10-09 DATE PLOTTED => 02-FEB-2010 TIME PLOTTED => 11:20

BORDER LAST REVISED 8/1/2008
RELATIVE BORDER SCALE IS IN INCHES 0 1 2 3
USERNAME => trlenard
DGN FILE => c07163ua014.dgn
CU 12235
EA 071631