Dist	COUNTY	ROUTE	POST MILES TOTAL PROJECT	SHEET No.	TOTAL SHEETS
12	Ora	22,405, 605	R0.3/R0.9, 22.3/24.0,3.0/R1.6	401	1929

REGISTERED CIVIL ENGINEER — 8/10/09 DATE

JENNIFER BROOKE RIVERA No. C70332 Exp.09/30/10 CIVIL — REGISTERED PROFESSIONAL ENGINEER — STATE OF CALIFORNIA

2-1-10
PLANS APPROVAL DATE

THE STATE OF CALIFORNIA OR ITS OFFICERS OR AGENTS SHALL NOT BE RESPONSIBLE FOR THE ACCURACY OR COMPLETENESS OF ELECTRONIC COPIES OF THIS PLAN SHEET.

AECOM
999 TOWN & COUNTRY RD
ORANGE, CA 92868

ORANGE COUNTY
TRANSPORTATION AUTHORITY
550 S. MAIN STREET
ORANGE, CA 92863-1584

CURVE DATA				
No.	R	Δ	T	L
B	70.00	15°57'48"	9.82	19.50
C	48.50	14°21'58"	12.16	24.20

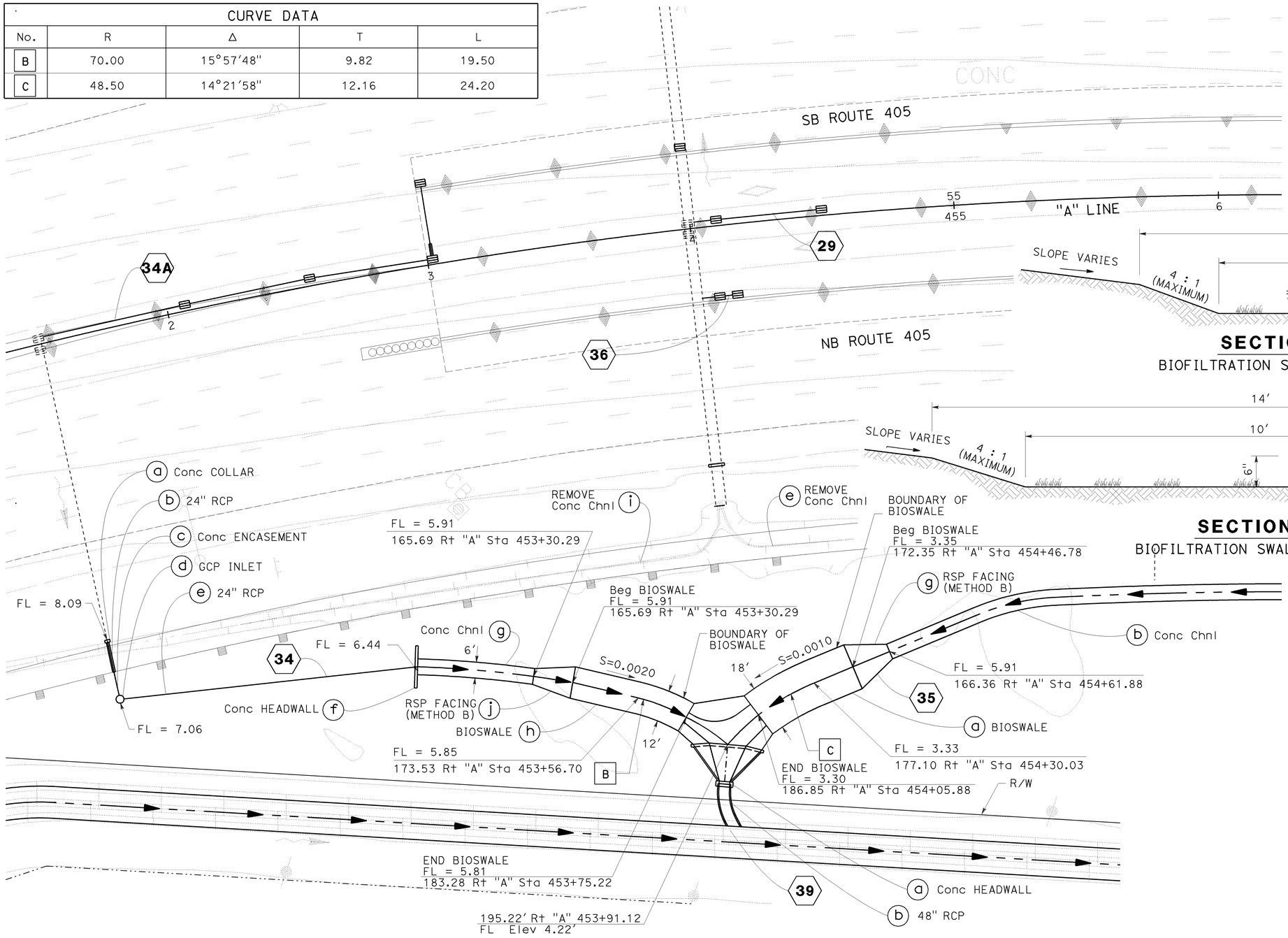

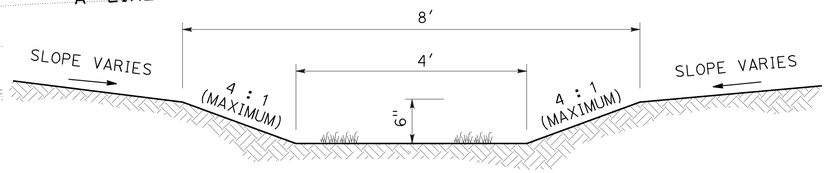

SECTION VIEW
BIOFILTRATION SWALE SYSTEM No. 34

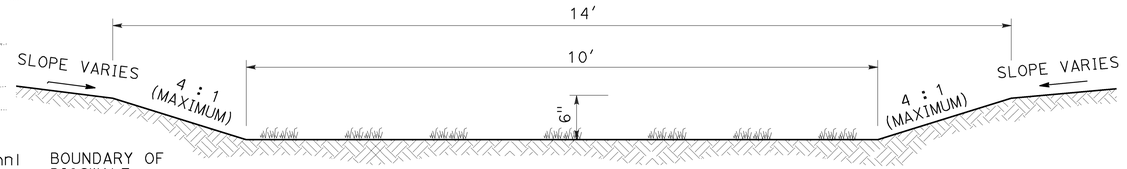

SECTION VIEW
BIOFILTRATION SWALE SYSTEM No. 35

NOTES:
FOR DETAILS NOT SHOWN, SEE DRAINAGE Det NO. 11

BIO SWALE SYSTEMS No. 34 AND 35

THIS PLAN ACCURATE FOR DRAINAGE WORK ONLY

DRAINAGE DETAILS
SCALE: 1" = 20'

DD-3

DUC TRAN | 8/10/09
REVISED BY | DATE REVISED
RASHOD GIBSON | BROOKE RIVERA
CALCULATED-DESIGNED BY | CHECKED BY
CONSULTANT FUNCTIONAL SUPERVISOR: ANDRZEJ NOWAK
STATE OF CALIFORNIA - DEPARTMENT OF TRANSPORTATION
Caltrans

LAST REVISION 08-10-09 | DATE PLOTTED => 03-FEB-2010 | TIME PLOTTED => 10:36

BORDER LAST REVISED 8/1/2008 | RELATIVE BORDER SCALE IS IN INCHES 0 1 2 3 | USERNAME => s135318 | DGN FILE => c07163ic003.dgn | CU 12235 | EA 071631

Dist	COUNTY	ROUTE	POST MILES TOTAL PROJECT	SHEET No.	TOTAL SHEETS
12	Ora	22,405, 605	R0.3/R0.9, 22.3/24.0,3.0/R1.6	402	1929

REGISTERED CIVIL ENGINEER — DATE 8/10/09

2-1-10
PLANS APPROVAL DATE

REGISTERED PROFESSIONAL ENGINEER
JENNIFER BROOKE RIVERA
No. C70332
Exp. 09/30/10
CIVIL
STATE OF CALIFORNIA

THE STATE OF CALIFORNIA OR ITS OFFICERS OR AGENTS SHALL NOT BE RESPONSIBLE FOR THE ACCURACY OR COMPLETENESS OF ELECTRONIC COPIES OF THIS PLAN SHEET.

AECOM
999 TOWN & COUNTRY RD
ORANGE, CA 92868

ORANGE COUNTY
TRANSPORTATION AUTHORITY
550 S. MAIN STREET
ORANGE, CA 92863-1584

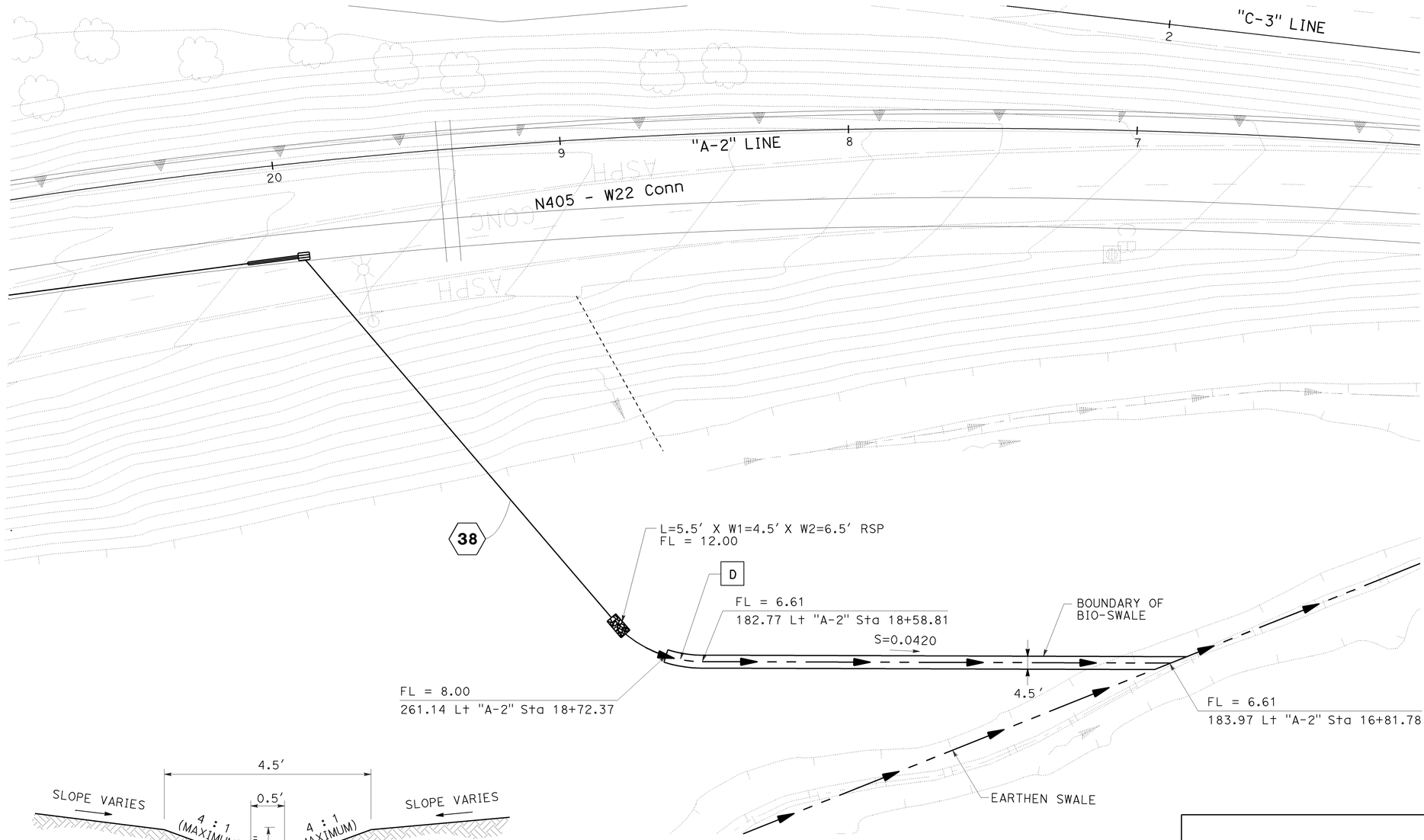

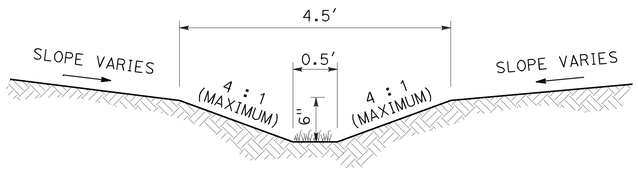

SECTION VIEW
BIOFILTRATION SWALE SYSTEM NO. 38

BIO SWALE SYSTEM No. 38

CURVE DATA				
No.	R	Δ	T	L
D	42.00	39°15′19″	14.98	28.78

THIS PLAN ACCURATE FOR DRAINAGE WORK ONLY

DRAINAGE DETAILS
SCALE: 1″ = 20′

DD-4

STATE OF CALIFORNIA - DEPARTMENT OF TRANSPORTATION
Caltrans
CONSULTANT FUNCTIONAL SUPERVISOR: ANDRZEJ NOWAK
CALCULATED-DESIGNED BY: RASHOD GIBSON
CHECKED BY: BROOKE RIVERA
REVISED BY: DUC TRAN
DATE REVISED: 8/10/09

LAST REVISION DATE PLOTTED => 03-FEB-2010
TIME PLOTTED => 10:37
08-10-09

BORDER LAST REVISED 8/1/2008
RELATIVE BORDER SCALE IS IN INCHES 0 1 2 3
USERNAME => s135318
DGN FILE => c071631c004.dgn
CU 12235
EA 071631

Dist	COUNTY	ROUTE	POST MILES TOTAL PROJECT	SHEET No.	TOTAL SHEETS
12	Ora	22,405, 605	R0.3/R0.9, 22.3/24.0,3.0/R1.6	403	1929

REGISTERED CIVIL ENGINEER 8/10/09 DATE

2-1-10
PLANS APPROVAL DATE

REGISTERED PROFESSIONAL ENGINEER JENNIFER BROOKE RIVERA No. C70332 Exp. 09/30/10 CIVIL STATE OF CALIFORNIA

THE STATE OF CALIFORNIA OR ITS OFFICERS OR AGENTS SHALL NOT BE RESPONSIBLE FOR THE ACCURACY OR COMPLETENESS OF ELECTRONIC COPIES OF THIS PLAN SHEET.

AECOM
999 TOWN & COUNTRY RD
ORANGE, CA 92868

ORANGE COUNTY
TRANSPORTATION AUTHORITY
550 S. MAIN STREET
ORANGE, CA 92863-1584

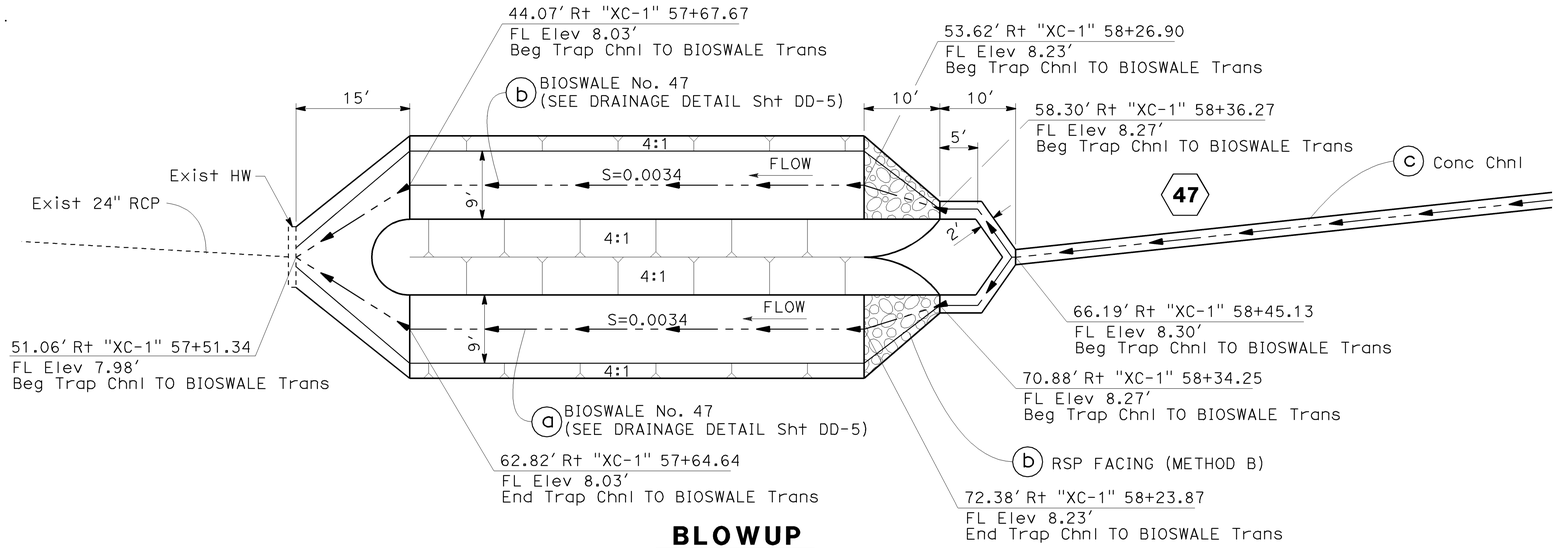

BLOWUP

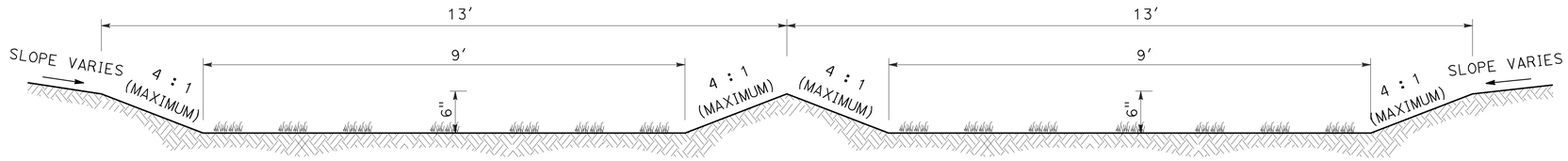

SECTION VIEW

BIOFILTRATION SYSTEM SWALE No. 47

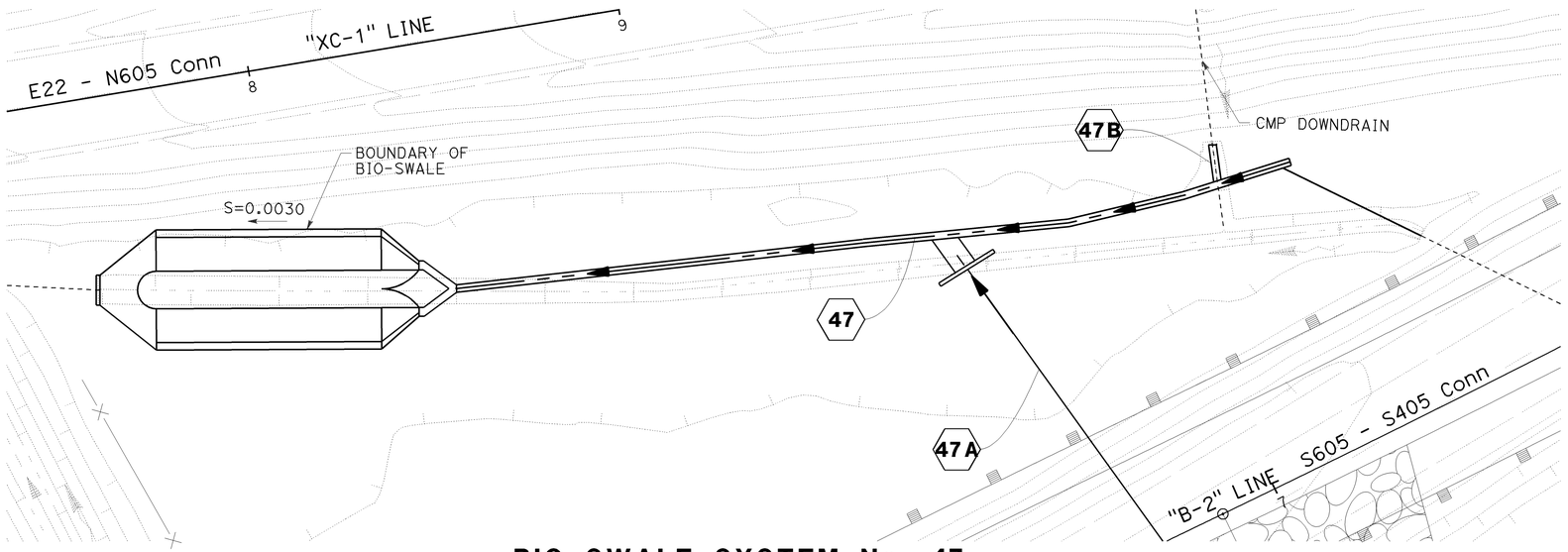

BIO SWALE SYSTEM No. 47

THIS PLAN ACCURATE FOR DRAINAGE WORK ONLY

DRAINAGE DETAILS

SCALE: 1" = 20'

DD-5

STATE OF CALIFORNIA - DEPARTMENT OF TRANSPORTATION
Caltrans

CONSULTANT FUNCTIONAL SUPERVISOR: ANDRZEJ NOWAK
CALCULATED-DESIGNED BY: RASHOD GIBSON
CHECKED BY: BROOKE RIVERA
REVISED BY: DUC TRAN
DATE REVISED: 8/10/09

LAST REVISION 08-10-09
DATE PLOTTED => 03-FEB-2010
TIME PLOTTED => 10:37

Dist	COUNTY	ROUTE	POST MILES TOTAL PROJECT	SHEET No.	TOTAL SHEETS
12	Ora	22,405, 605	R0.3/R0.9, 22.3/24.0,3.0/R1.6	404	1929

REGISTERED CIVIL ENGINEER — 8/10/09 DATE

JENNIFER BROOKE RIVERA No. C70332 Exp. 09/30/10 CIVIL — REGISTERED PROFESSIONAL ENGINEER — STATE OF CALIFORNIA

2-1-10
PLANS APPROVAL DATE

THE STATE OF CALIFORNIA OR ITS OFFICERS OR AGENTS SHALL NOT BE RESPONSIBLE FOR THE ACCURACY OR COMPLETENESS OF ELECTRONIC COPIES OF THIS PLAN SHEET.

AECOM
999 TOWN & COUNTRY RD
ORANGE, CA 92868

ORANGE COUNTY
TRANSPORTATION AUTHORITY
550 S. MAIN STREET
ORANGE, CA 92863-1584

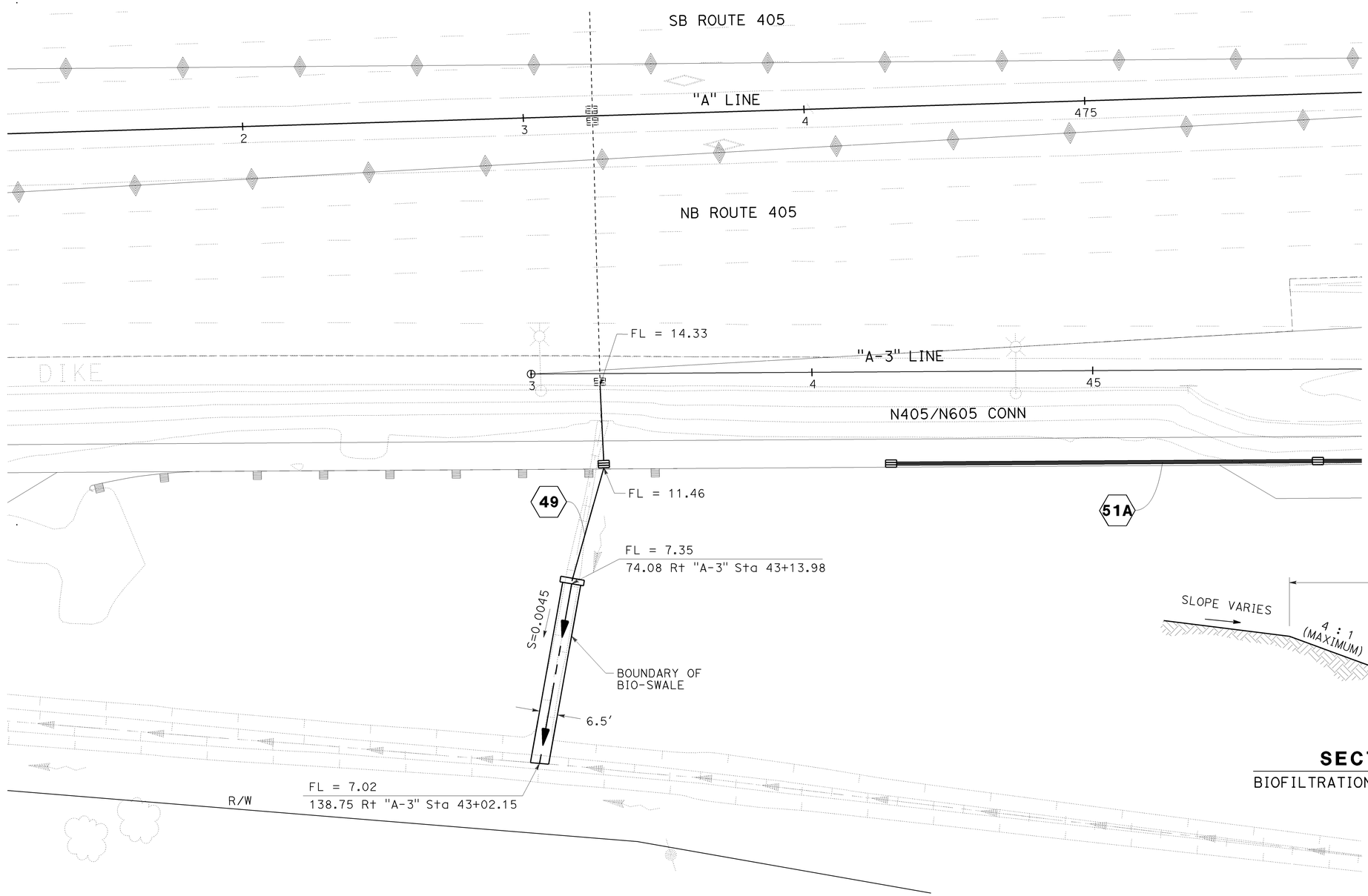

BIO SWALE SYSTEM No. 49

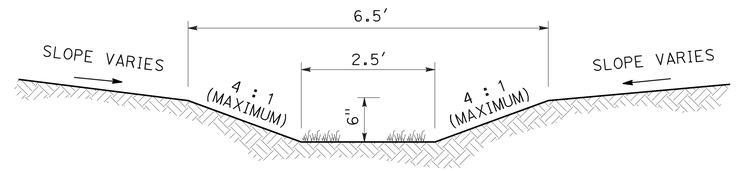

SECTION VIEW
BIOFILTRATION SWALE SYSTEM No. 49

DRAINAGE DETAILS
SCALE: 1" = 20'

DD-6

THIS PLAN ACCURATE FOR DRAINAGE WORK ONLY

STATE OF CALIFORNIA - DEPARTMENT OF TRANSPORTATION — Caltrans

CONSULTANT FUNCTIONAL SUPERVISOR: ANDRZEJ NOWAK

CALCULATED-DESIGNED BY: RASHOD GIBSON
CHECKED BY: BROOKE RIVERA

REVISED BY	DATE REVISED
DUC TRAN	8/10/09

LAST REVISION DATE PLOTTED => 03-FEB-2010
TIME PLOTTED => 10:37
08-10-09

Dist	COUNTY	ROUTE	POST MILES TOTAL PROJECT	SHEET No.	TOTAL SHEETS
12	Ora	22,405, 605	R0.3/R0.9, 22.3/24.0,3.0/R1.6	405	1929

REGISTERED CIVIL ENGINEER — DATE 8/10/09

2-1-10
PLANS APPROVAL DATE

REGISTERED PROFESSIONAL ENGINEER
JENNIFER BROOKE RIVERA
No. C70332
Exp. 09/30/10
CIVIL
STATE OF CALIFORNIA

THE STATE OF CALIFORNIA OR ITS OFFICERS OR AGENTS SHALL NOT BE RESPONSIBLE FOR THE ACCURACY OR COMPLETENESS OF ELECTRONIC COPIES OF THIS PLAN SHEET.

AECOM
999 TOWN & COUNTRY RD
ORANGE, CA 92868

ORANGE COUNTY
TRANSPORTATION AUTHORITY
550 S. MAIN STREET
ORANGE, CA 92863-1584

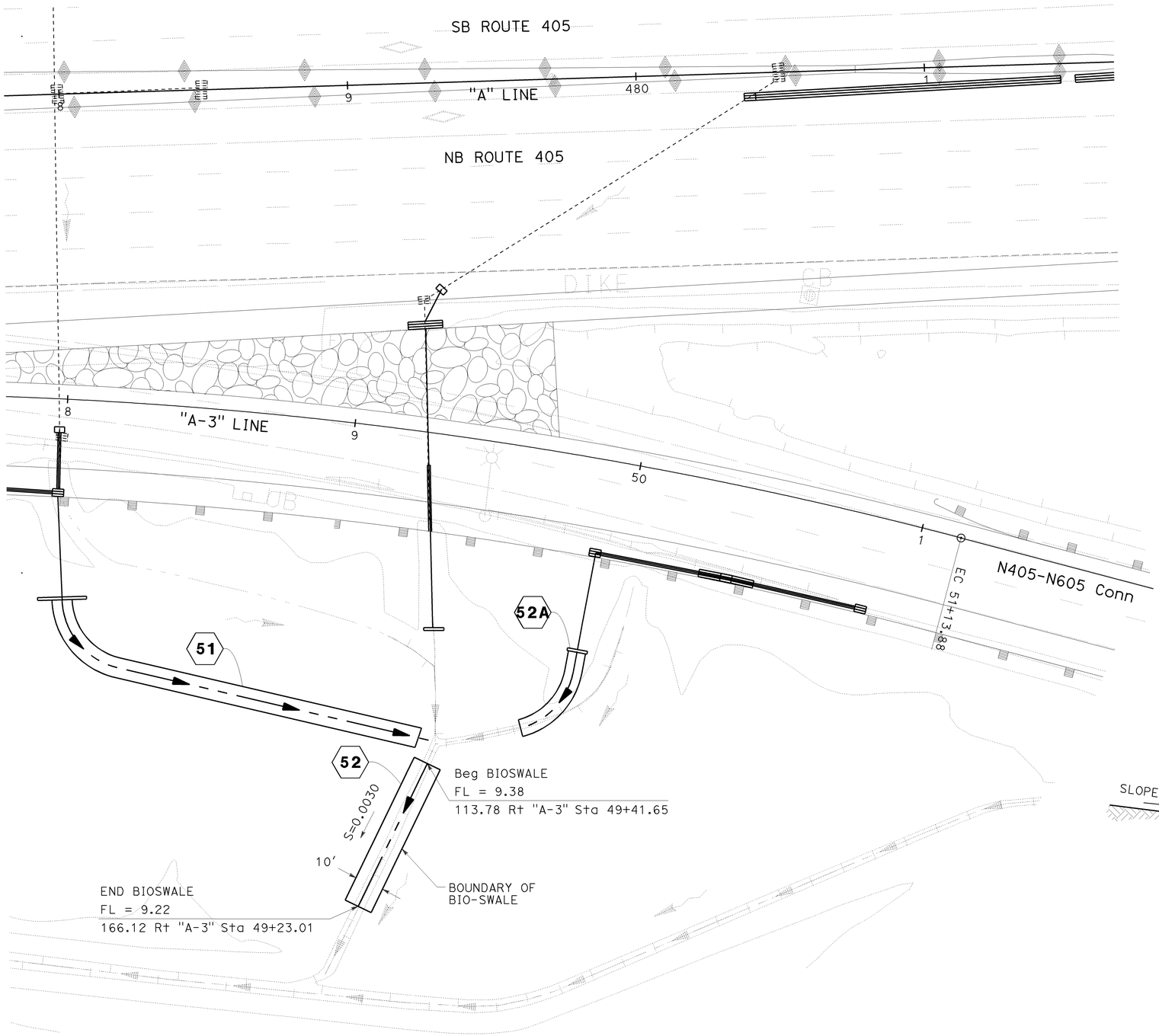

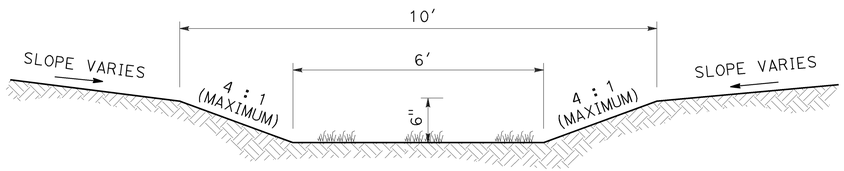

SECTION VIEW
BIOFILTRATION SWALE SYSTEM No. 52

BIO SWALE SYSTEM No. 52

DRAINAGE DETAILS

SCALE: 1" = 20'

DD-7

THIS PLAN ACCURATE FOR DRAINAGE WORK ONLY

STATE OF CALIFORNIA - DEPARTMENT OF TRANSPORTATION
Caltrans

CONSULTANT FUNCTIONAL SUPERVISOR: ANDRZEJ NOWAK
CALCULATED-DESIGNED BY:
CHECKED BY:
REVISED BY: DUC TRAN
DATE REVISED: 8/10/09
RASHOD GIBSON
BROOKE RIVERA

LAST REVISION | DATE PLOTTED => 03-FEB-2010
08-10-09 | TIME PLOTTED => 10:37

BORDER LAST REVISED 8/1/2008

RELATIVE BORDER SCALE IS IN INCHES 0 1 2 3

USERNAME => s135318
DGN FILE => c071631c007.dgn

CU 12235

EA 071631

Dist	COUNTY	ROUTE	POST MILES TOTAL PROJECT	SHEET No.	TOTAL SHEETS
12	Ora	22,405, 605	R0.3/R0.9, 22.3/24.0,3.0/R1.6	406	1929

REGISTERED CIVIL ENGINEER — 8/10/09 DATE

2-1-10
PLANS APPROVAL DATE

REGISTERED PROFESSIONAL ENGINEER
JENNIFER BROOKE RIVERA
No. C70332
Exp. 09/30/10
CIVIL
STATE OF CALIFORNIA

THE STATE OF CALIFORNIA OR ITS OFFICERS OR AGENTS SHALL NOT BE RESPONSIBLE FOR THE ACCURACY OR COMPLETENESS OF ELECTRONIC COPIES OF THIS PLAN SHEET.

AECOM
999 TOWN & COUNTRY RD
ORANGE, CA 92868

ORANGE COUNTY
TRANSPORTATION AUTHORITY
550 S. MAIN STREET
ORANGE, CA 92863-1584

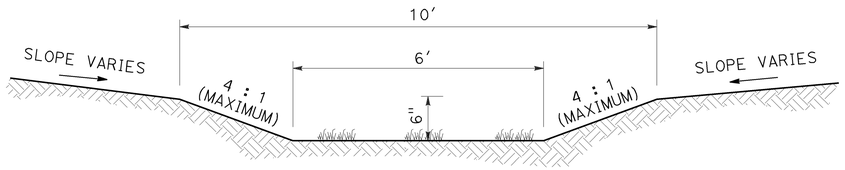

SECTION VIEW
BIOFILTRATION SWALE SYSTEM No. 53A

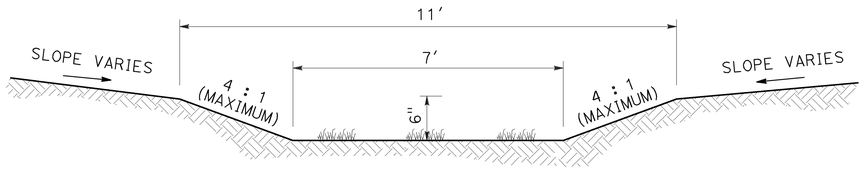

SECTION VIEW
BIOFILTRATION SWALE SYSTEM No. 53B

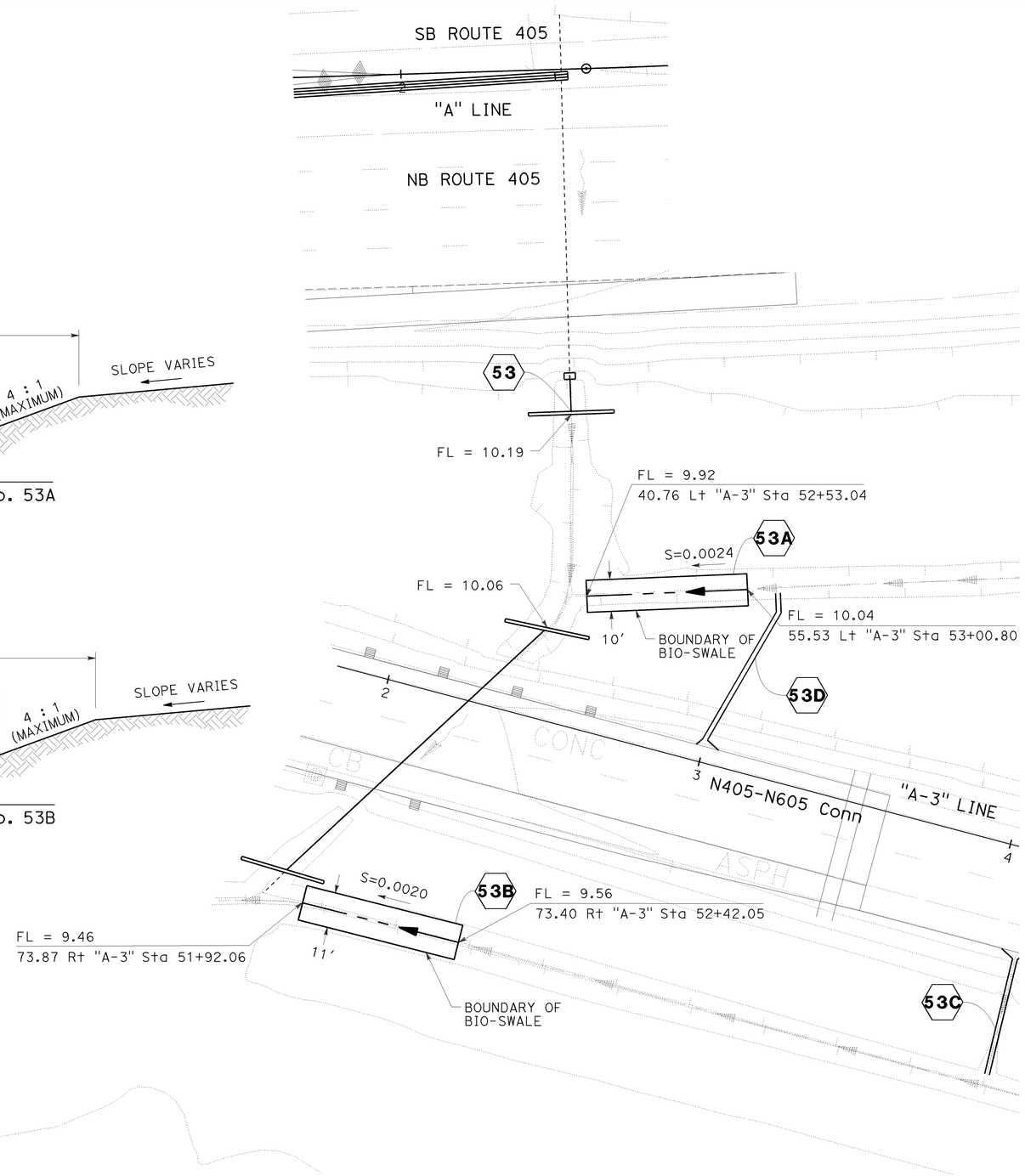

BIO SWALE SYSTEMS No. 53A AND 53B

THIS PLAN ACCURATE FOR DRAINAGE WORK ONLY

DRAINAGE DETAILS

SCALE: 1" = 20′

DD-8

REVISED BY: DUC TRAN — DATE REVISED: 8/10/09
CALCULATED-DESIGNED BY: RASHOD GIBSON — CHECKED BY: BROOKE RIVERA
CONSULTANT FUNCTIONAL SUPERVISOR: ANDRZEJ NOWAK
STATE OF CALIFORNIA - DEPARTMENT OF TRANSPORTATION — Caltrans

LAST REVISION: DATE PLOTTED => 03-FEB-2010; 08-10-09 TIME PLOTTED => 10:37

BORDER LAST REVISED 8/1/2008 — RELATIVE BORDER SCALE IS IN INCHES 0 1 2 3 — USERNAME => s135318 — DGN FILE => c071631c008.dgn — CU 12235 — EA 071631

Dist	COUNTY	ROUTE	POST MILES TOTAL PROJECT	SHEET No.	TOTAL SHEETS
12	Ora	22,405, 605	R0.3/R0.9, 22.3/24.0,3.0/R1.6	407	1929

REGISTERED CIVIL ENGINEER — 8/10/09 DATE

JENNIFER BROOKE RIVERA No. C70332 Exp. 09/30/10 CIVIL — REGISTERED PROFESSIONAL ENGINEER — STATE OF CALIFORNIA

2-1-10
PLANS APPROVAL DATE

THE STATE OF CALIFORNIA OR ITS OFFICERS OR AGENTS SHALL NOT BE RESPONSIBLE FOR THE ACCURACY OR COMPLETENESS OF ELECTRONIC COPIES OF THIS PLAN SHEET.

AECOM
999 TOWN & COUNTRY RD
ORANGE, CA 92868

ORANGE COUNTY
TRANSPORTATION AUTHORITY
550 S. MAIN STREET
ORANGE, CA 92863-1584

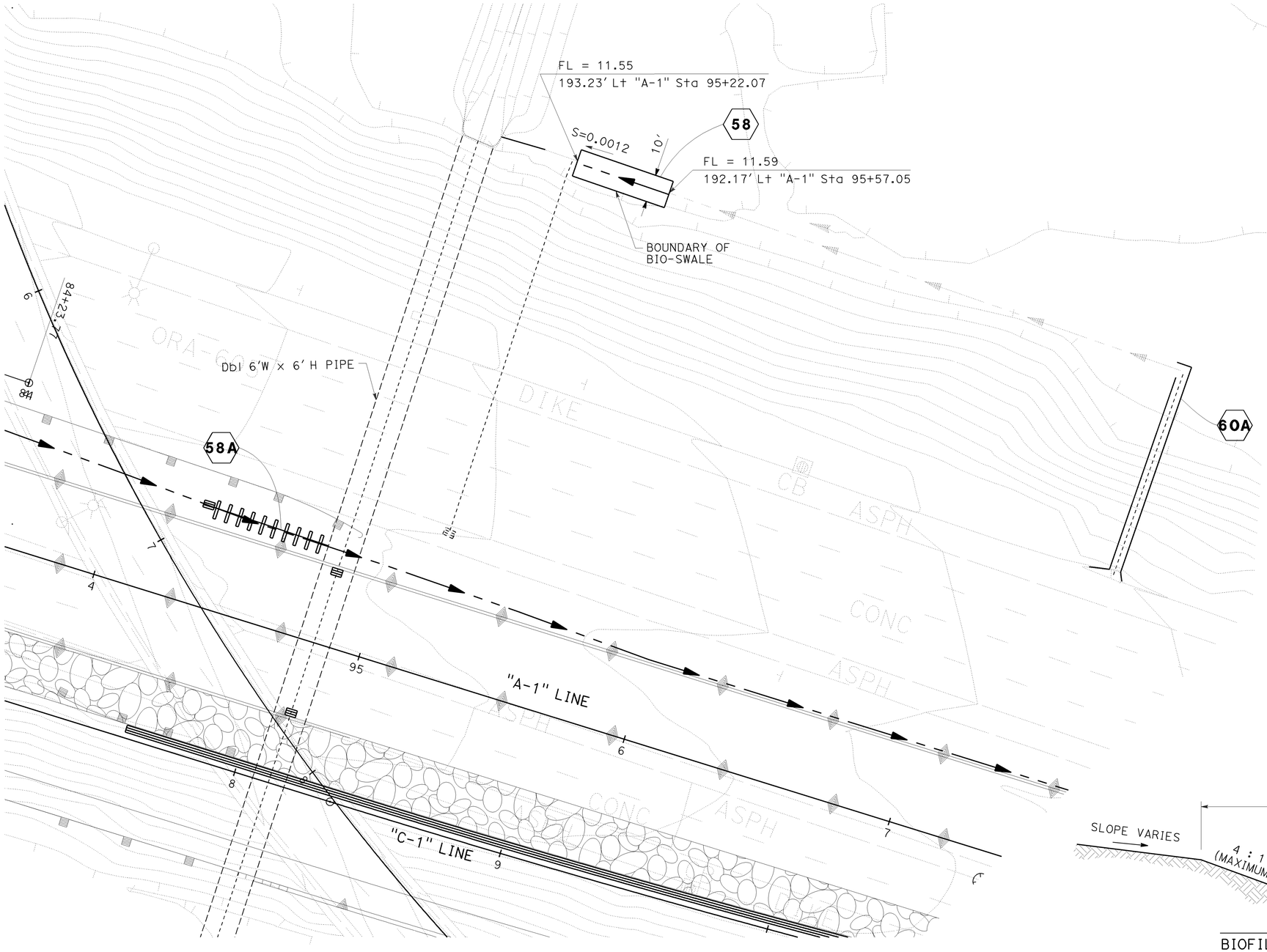

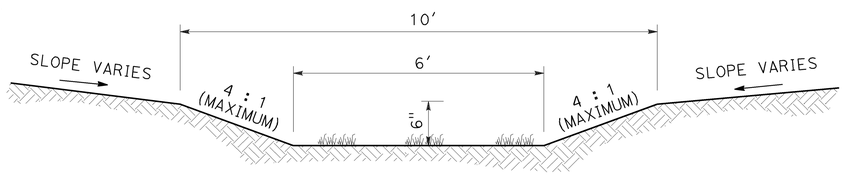

SECTION VIEW
BIOFILTRATION SWALE SYSTEM No. 58

BIO SWALE SYSTEM No. 58

THIS PLAN ACCURATE FOR DRAINAGE WORK ONLY

DRAINAGE DETAILS

SCALE: 1" = 20'

DD-9

STATE OF CALIFORNIA - DEPARTMENT OF TRANSPORTATION — Caltrans

CONSULTANT FUNCTIONAL SUPERVISOR: ANDRZEJ NOWAK

CALCULATED-DESIGNED BY: RASHOD GIBSON
CHECKED BY: BROOKE RIVERA

REVISED BY	DATE REVISED
DUC TRAN	8/10/09

LAST REVISION DATE PLOTTED => 03-FEB-2010
TIME PLOTTED => 10:37

BORDER LAST REVISED 8/1/2008 — RELATIVE BORDER SCALE IS IN INCHES 0 1 2 3

USERNAME => s135318
DGN FILE => c071631c009.dgn

CU 12235 — EA 071631

Dist	COUNTY	ROUTE	POST MILES TOTAL PROJECT	SHEET No.	TOTAL SHEETS
12	Ora	22,405, 605	R0.3/R0.9, 22.3/24.0,3.0/R1.6	408	1929

REGISTERED CIVIL ENGINEER 8/10/09 DATE

2-1-10
PLANS APPROVAL DATE

REGISTERED PROFESSIONAL ENGINEER JENNIFER BROOKE RIVERA No. C70332 Exp. 09/30/10 CIVIL STATE OF CALIFORNIA

THE STATE OF CALIFORNIA OR ITS OFFICERS OR AGENTS SHALL NOT BE RESPONSIBLE FOR THE ACCURACY OR COMPLETENESS OF ELECTRONIC COPIES OF THIS PLAN SHEET.

AECOM
999 TOWN & COUNTRY RD
ORANGE, CA 92868

ORANGE COUNTY
TRANSPORTATION AUTHORITY
550 S. MAIN STREET
ORANGE, CA 92863-1584

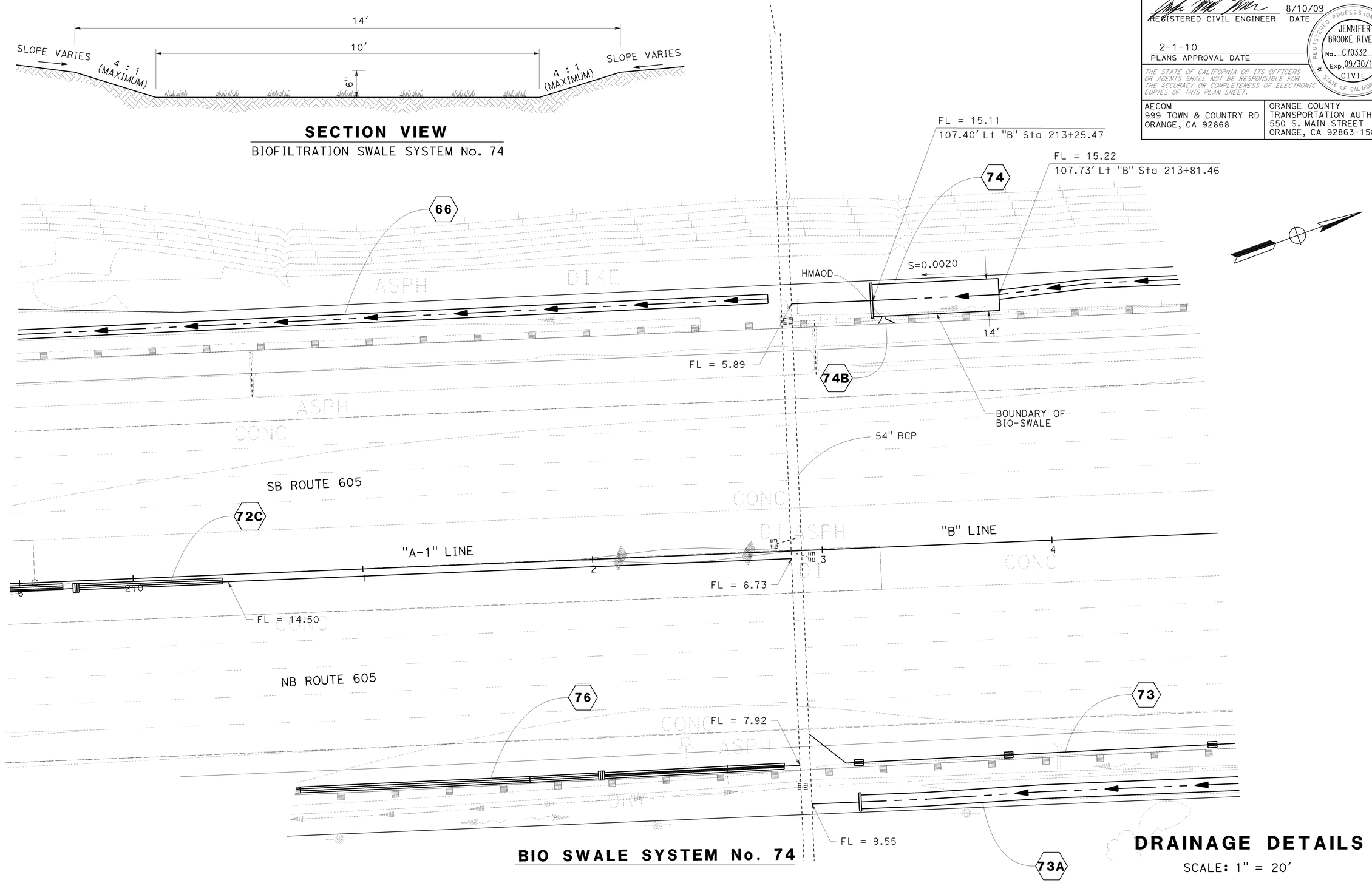

SECTION VIEW

BIOFILTRATION SWALE SYSTEM No. 74

BIO SWALE SYSTEM No. 74

THIS PLAN ACCURATE FOR DRAINAGE WORK ONLY

DRAINAGE DETAILS

SCALE: 1" = 20'

DD-10

STATE OF CALIFORNIA - DEPARTMENT OF TRANSPORTATION
Caltrans

CONSULTANT FUNCTIONAL SUPERVISOR: ANDRZEJ NOWAK
CALCULATED-DESIGNED BY: RASHOD GIBSON
CHECKED BY: BROOKE RIVERA
REVISED BY: DUC TRAN
DATE REVISED: 8/10/09

LAST REVISION 08-10-09
DATE PLOTTED => 03-FEB-2010
TIME PLOTTED => 10:38

Dist	COUNTY	ROUTE	POST MILES TOTAL PROJECT	SHEET No.	TOTAL SHEETS
12	Ora	22,405, 605	R0.3/R0.9, 22.3/24.0,3.0/R1.6	409	1929

8/10/09
REGISTERED CIVIL ENGINEER DATE

REGISTERED PROFESSIONAL ENGINEER
JENNIFER BROOKE RIVERA
No. C70332
Exp.09/30/10
CIVIL
STATE OF CALIFORNIA

2-1-10
PLANS APPROVAL DATE

THE STATE OF CALIFORNIA OR ITS OFFICERS OR AGENTS SHALL NOT BE RESPONSIBLE FOR THE ACCURACY OR COMPLETENESS OF ELECTRONIC COPIES OF THIS PLAN SHEET.

AECOM
999 TOWN & COUNTRY RD
ORANGE, CA 92868

ORANGE COUNTY
TRANSPORTATION AUTHORITY
550 S. MAIN STREET
ORANGE, CA 92863-1584

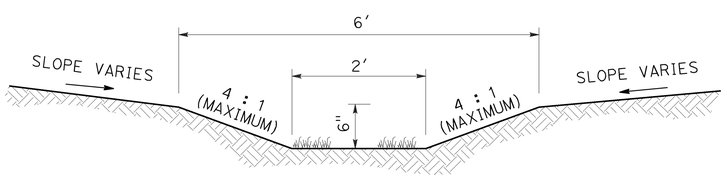

SECTION VIEW

BIOFILTRATION SWALE SYSTEM No. 91

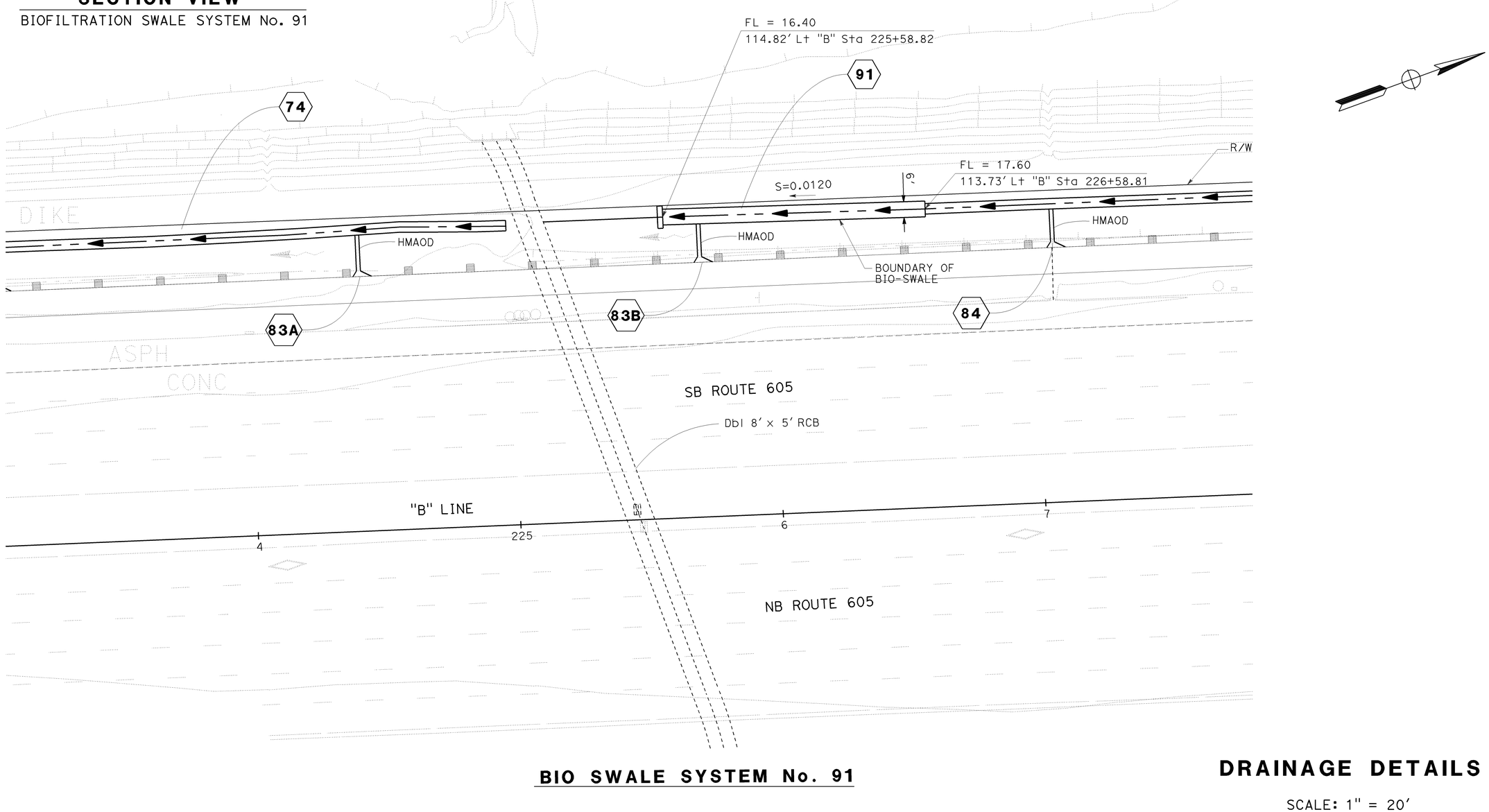

BIO SWALE SYSTEM No. 91

THIS PLAN ACCURATE FOR DRAINAGE WORK ONLY

DRAINAGE DETAILS

SCALE: 1" = 20'

DD-11

LAST REVISION DATE PLOTTED => 03-FEB-2010
08-10-09 TIME PLOTTED => 10:38

REVISED BY	DATE REVISED
DUC TRAN	8/10/09

CALCULATED-DESIGNED BY: RASHOD GIBSON
CHECKED BY: BROOKE RIVERA

CONSULTANT FUNCTIONAL SUPERVISOR: ANDRZEJ NOWAK

STATE OF CALIFORNIA - DEPARTMENT OF TRANSPORTATION
Caltrans

BORDER LAST REVISED 8/1/2008

RELATIVE BORDER SCALE IS IN INCHES 0 1 2 3

USERNAME => s135318
DGN FILE => c071631c011.dgn

CU 12235

EA 071631

Dist	COUNTY	ROUTE	POST MILES TOTAL PROJECT	SHEET No.	TOTAL SHEETS
12	Ora	22,405, 605	R0.3/R0.9, 22.3/24.0,3.0/R1.6	410	1929

REGISTERED CIVIL ENGINEER — 8/10/09 DATE

2-1-10
PLANS APPROVAL DATE

REGISTERED PROFESSIONAL ENGINEER
JENNIFER BROOKE RIVERA
No. C70332
Exp. 09/30/10
CIVIL
STATE OF CALIFORNIA

THE STATE OF CALIFORNIA OR ITS OFFICERS OR AGENTS SHALL NOT BE RESPONSIBLE FOR THE ACCURACY OR COMPLETENESS OF ELECTRONIC COPIES OF THIS PLAN SHEET.

AECOM
999 TOWN & COUNTRY RD
ORANGE, CA 92868

ORANGE COUNTY
TRANSPORTATION AUTHORITY
550 S. MAIN STREET
ORANGE, CA 92863-1584

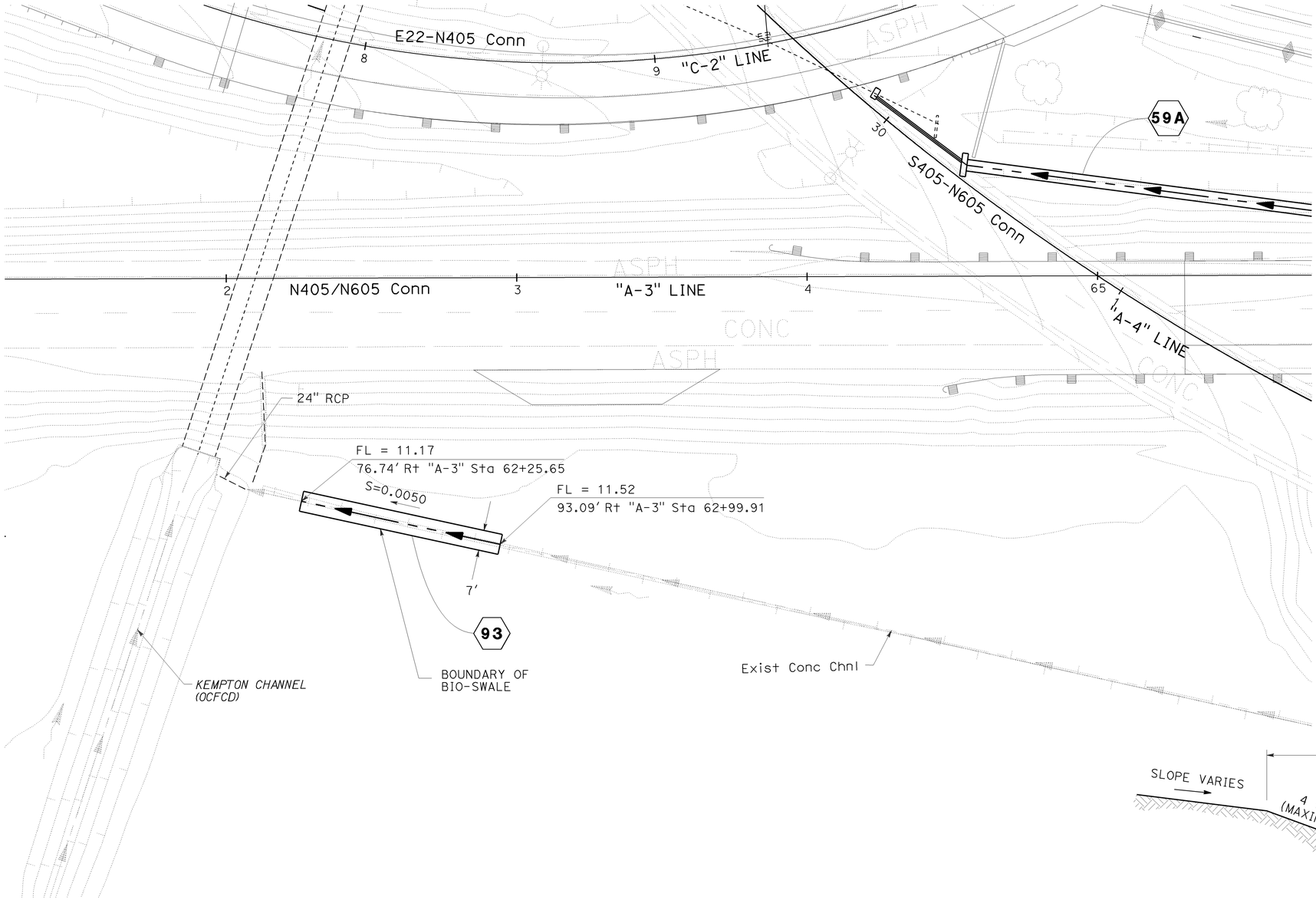

BIO SWALE SYSTEM No. 93

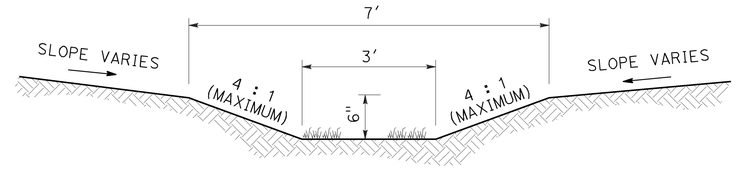

SECTION VIEW

BIOFILTRATION SWALE SYSTEM No. 93

DRAINAGE DETAILS

SCALE: 1" = 20'

DD-12

THIS PLAN ACCURATE FOR DRAINAGE WORK ONLY

STATE OF CALIFORNIA - DEPARTMENT OF TRANSPORTATION
Caltrans

CONSULTANT FUNCTIONAL SUPERVISOR: ANDRZEJ NOWAK

REVISED BY	DATE REVISED
DUC TRAN	8/10/09

CALCULATED-DESIGNED BY: RASHOD GIBSON
CHECKED BY: BROOKE RIVERA

LAST REVISION DATE PLOTTED => 03-FEB-2010
TIME PLOTTED => 10:38
08-10-09

BORDER LAST REVISED 8/1/2008

RELATIVE BORDER SCALE IS IN INCHES 0 1 2 3

USERNAME => s135318
DGN FILE => c071631c012.dgn

CU 12235

EA 071631

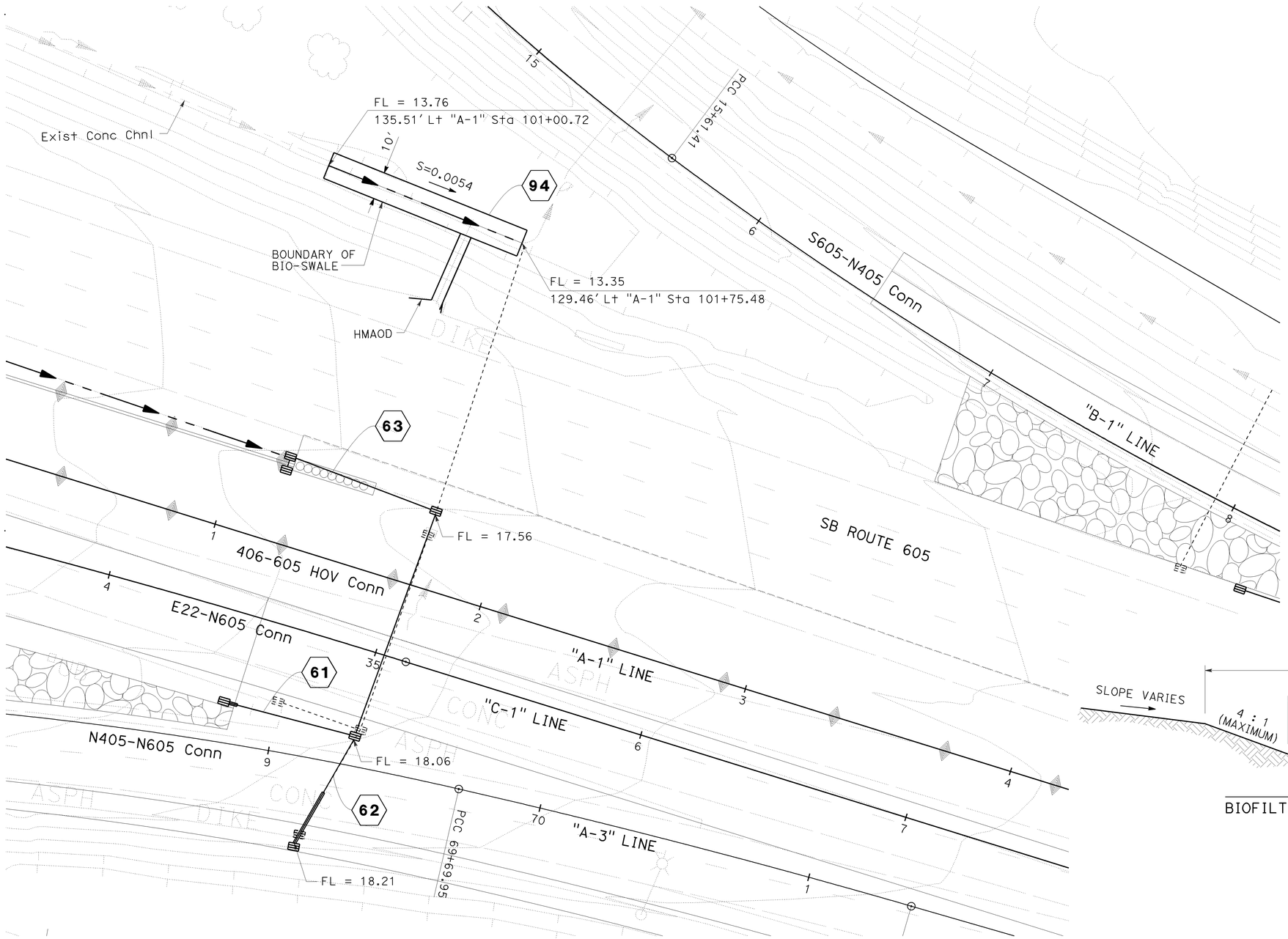

BIO SWALE SYSTEM No. 94

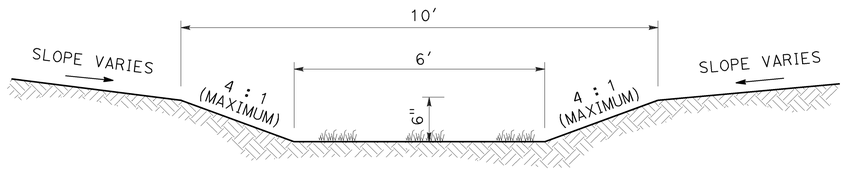

SECTION VIEW

BIOFILTRATION SWALE SYSTEM No. 94

DRAINAGE DETAILS

SCALE: 1" = 20'

DD-13

THIS PLAN ACCURATE FOR DRAINAGE WORK ONLY

Dist	COUNTY	ROUTE	POST MILES TOTAL PROJECT	SHEET No.	TOTAL SHEETS
12	Ora	22,405, 605	R0.3/R0.9, 22.3/24.0,3.0/R1.6	411	1929

8/10/09
REGISTERED CIVIL ENGINEER DATE

JENNIFER BROOKE RIVERA
No. C70332
Exp. 09/30/10
CIVIL
REGISTERED PROFESSIONAL ENGINEER
STATE OF CALIFORNIA

2-1-10
PLANS APPROVAL DATE

THE STATE OF CALIFORNIA OR ITS OFFICERS OR AGENTS SHALL NOT BE RESPONSIBLE FOR THE ACCURACY OR COMPLETENESS OF ELECTRONIC COPIES OF THIS PLAN SHEET.

AECOM
999 TOWN & COUNTRY RD
ORANGE, CA 92868

ORANGE COUNTY
TRANSPORTATION AUTHORITY
550 S. MAIN STREET
ORANGE, CA 92863-1584

REVISED BY	DATE REVISED
DUC TRAN	8/10/09

CALCULATED-DESIGNED BY: RASHOD GIBSON
CHECKED BY: BROOKE RIVERA

CONSULTANT FUNCTIONAL SUPERVISOR: ANDRZEJ NOWAK

STATE OF CALIFORNIA - DEPARTMENT OF TRANSPORTATION
Caltrans

LAST REVISION DATE PLOTTED => 03-FEB-2010
08-10-09 TIME PLOTTED => 10:38

Dist	COUNTY	ROUTE	POST MILES TOTAL PROJECT	SHEET No.	TOTAL SHEETS
12	Ora	22,405, 605	R0.3/R0.9, 22.3/24.0,3.0/R1.6	412	1929

REGISTERED CIVIL ENGINEER — DATE 8/10/09

JENNIFER BROOKE RIVERA
No. C70332
Exp. 09/30/10
CIVIL
REGISTERED PROFESSIONAL ENGINEER
STATE OF CALIFORNIA

2-1-10
PLANS APPROVAL DATE

THE STATE OF CALIFORNIA OR ITS OFFICERS OR AGENTS SHALL NOT BE RESPONSIBLE FOR THE ACCURACY OR COMPLETENESS OF ELECTRONIC COPIES OF THIS PLAN SHEET.

AECOM
999 TOWN & COUNTRY RD
ORANGE, CA 92868

ORANGE COUNTY
TRANSPORTATION AUTHORITY
550 S. MAIN STREET
ORANGE, CA 92863-1584

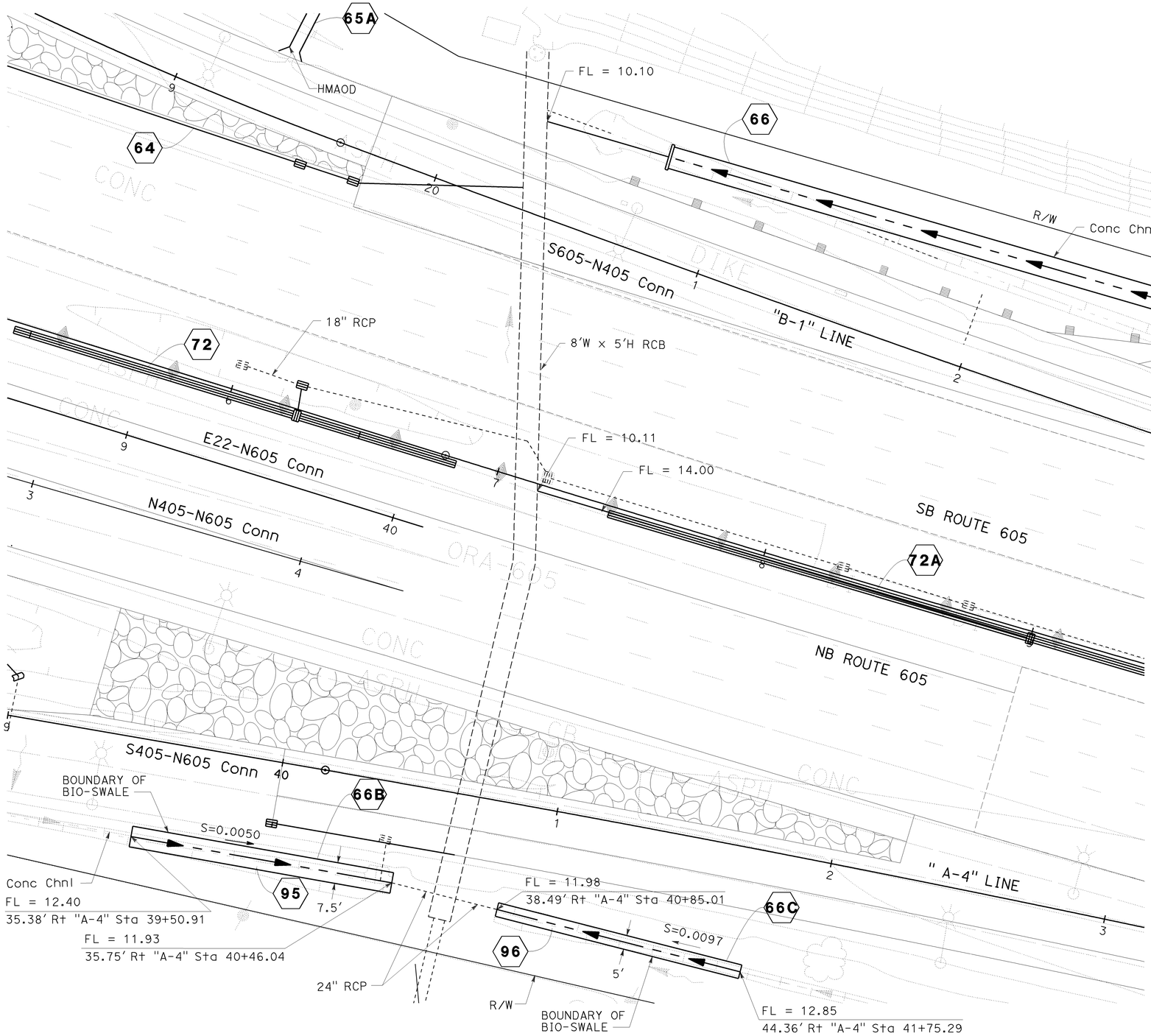

BIO SWALE SYSTEMS No. 95 AND 96

THIS PLAN ACCURATE FOR DRAINAGE WORK ONLY

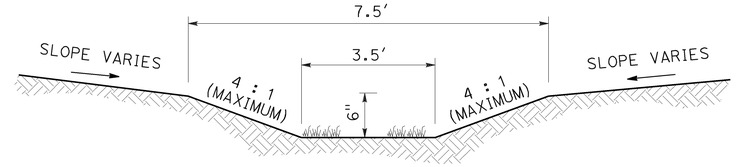

SECTION VIEW
BIOFILTRATION SWALE SYSTEM No. 95

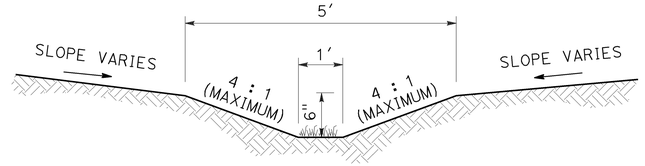

SECTION VIEW
BIOFILTRATION SWALE SYSTEM No. 96

DRAINAGE DETAILS

SCALE: 1" = 20'

DD-14

REVISED BY	DATE REVISED
DUC TRAN	8/10/09

CALCULATED-DESIGNED BY: RASHOD GIBSON
CHECKED BY: BROOKE RIVERA
CONSULTANT FUNCTIONAL SUPERVISOR: ANDRZEJ NOWAK

STATE OF CALIFORNIA - DEPARTMENT OF TRANSPORTATION
Caltrans

LAST REVISION: 08-10-09
DATE PLOTTED => 03-FEB-2010
TIME PLOTTED => 10:38

BORDER LAST REVISED 8/1/2008
RELATIVE BORDER SCALE IS IN INCHES 0 1 2 3
USERNAME => s135318
DGN FILE => c071631c014.dgn
CU 12235
EA 071631

Dist	COUNTY	ROUTE	POST MILES TOTAL PROJECT	SHEET No.	TOTAL SHEETS
12	Ora	22,405, 605	R0.3/R0.9, 22.3/24.0,3.0/R1.6	413	1929

REGISTERED CIVIL ENGINEER — 8/10/09 DATE

2-1-10
PLANS APPROVAL DATE

JENNIFER BROOKE RIVERA
No. C70332
Exp. 09/30/10
CIVIL
REGISTERED PROFESSIONAL ENGINEER
STATE OF CALIFORNIA

THE STATE OF CALIFORNIA OR ITS OFFICERS OR AGENTS SHALL NOT BE RESPONSIBLE FOR THE ACCURACY OR COMPLETENESS OF ELECTRONIC COPIES OF THIS PLAN SHEET.

AECOM
999 TOWN & COUNTRY RD
ORANGE, CA 92868

ORANGE COUNTY
TRANSPORTATION AUTHORITY
550 S. MAIN STREET
ORANGE, CA 92863-1584

NOTES:

1. SEE DRAINAGE PROFILE TO DETERMINE LIMITS OF Det No. 27 FOR (10)

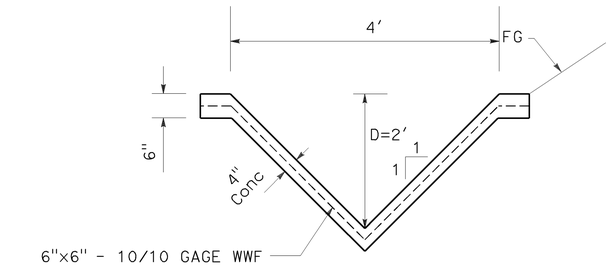

SECTION A-A

System 46 - 178.74' Rt "A" Sta 468+37.50 TO 168.17' Rt "A" Sta 468+39.26
System 47A - 98.29' Lt "B-2" Sta 56+50.27 TO 88.28' Lt "B-2" Sta 56+52.12
System 47B - 89.60' Lt "B-2" Sta 57+25.65 TO 8.45' Lt "B-2" Sta 57+22.53
System 51 - 69.52' Rt "A-3" Sta 48+01.59 TO 105.37' Rt "A-3" Sta 49+36.95
System 52A - 96.66' Rt "A-3" Sta 49+73.95 TO 67.46' Rt "A-3" Sta 49+89.63
System 53 - 77.15' Rt "A-3" Sta 51+76.79 TO 66.16' Rt "A-3" Sta 51+83.47
System 53 - 94.16' Lt "A-3" Sta 52+33.96 TO 28.25' Lt "A-3" Sta 52+43.72
System 66 - 118.79' Lt "A-1" Sta 113+26.59 TO 110.10' Lt "B" Sta 212+80.93
System 66C - 42.00' Rt "A-4" Sta 45+10.25 TO 50.86' Rt "A-4" Sta 45+10.18
System 73A - 110.36' Rt "B" Sta 213+12.39 TO 109.50' Rt "B" Sta 222+46.14
System 74 - 111.90' Lt "B" Sta 213+81.33 TO 114.87' Lt "B" Sta 224+99.05
System 91 - 113.73' Lt "B" Sta 226+58.81 TO 110.57' Lt "B" Sta 233+40.98

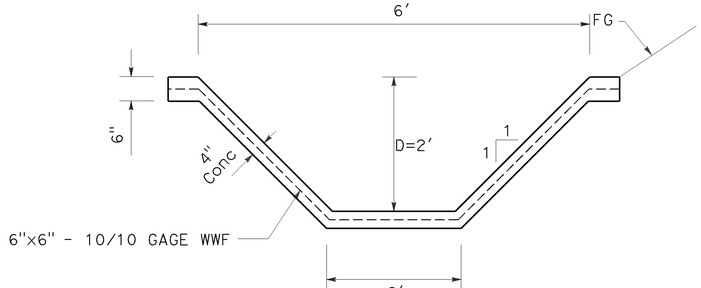

SECTION B-B

System 1 - 130.00' Lt "A" Sta 395+50.00 TO 35.00' Lt "SB-2" Sta 46+90.47
System 46 - 178.19' Rt "A" Sta 468+37.59 TO 168.17' Rt "A" Sta 468+39.26
System 55 - 116.72' Lt "A-3" Sta 55+06.03 TO 63.59' Rt "C-2" Sta 15+48.20
System 57A - 11.00' Lt "C-2" Sta 13+28.85 TO 10.39' Lt "C-2" Sta 17+12.27
System 59A - 21.57' Lt "A-3" Sta 65+79.04 TO 38.20' Lt "A-3" Sta 64+55.15

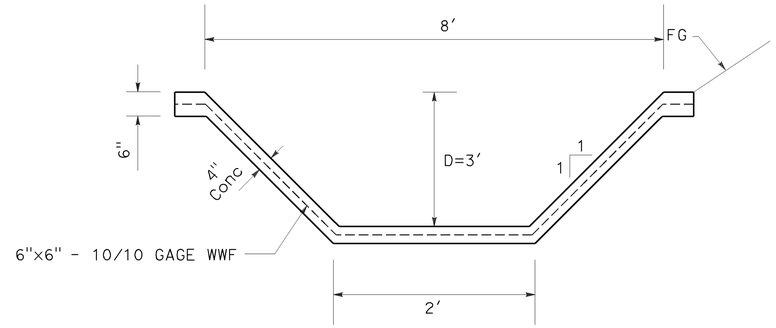

SECTION C-C

System 1 - 35.00' Lt "SB-2" Sta 47+00.47 TO 49.25' Lt "SB-2" Sta 52+50.00

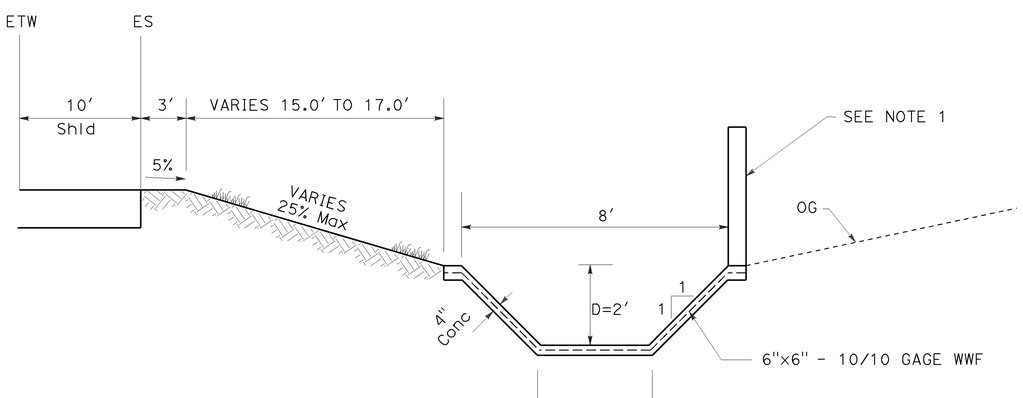

SECTION D-D
BIOSTRIP

System 10 - 156.25' Rt "A" Sta 417+01.78 TO 130.00' Rt "A" Sta 422+39.00
System 19 - 143.70' Rt "A" Sta 422+68.60 TO 145.65' Rt "A" Sta 428+32.21

CHANNEL TYPICAL CROSS SECTIONS

THIS PLAN ACCURATE FOR DRAINAGE WORK ONLY

DRAINAGE DETAILS

NO SCALE

DD-15

CALCULATED-DESIGNED BY
CHECKED BY
REVISED BY — DUC TRAN
DATE REVISED — 8/10/09
RASHOD GIBSON
BROOKE RIVERA
CONSULTANT FUNCTIONAL SUPERVISOR — ANDRZEJ NOWAK
STATE OF CALIFORNIA - DEPARTMENT OF TRANSPORTATION
Caltrans

LAST REVISION 08-10-09
DATE PLOTTED => 03-FEB-2010
TIME PLOTTED => 10:39

BORDER LAST REVISED 8/1/2008
RELATIVE BORDER SCALE IS IN INCHES 0 1 2 3
USERNAME => s135318
DGN FILE => c071631c015.dgn
CU 12235
EA 071631

Dist	COUNTY	ROUTE	POST MILES TOTAL PROJECT	SHEET No.	TOTAL SHEETS
12	Ora	22,405, 605	R0.3/R0.9, 22.3/24.0,3.0/R1.6	414	1929

REGISTERED CIVIL ENGINEER — DATE 8/10/09

JENNIFER BROOKE RIVERA No. C70332 Exp. 09/30/10 CIVIL — REGISTERED PROFESSIONAL ENGINEER — STATE OF CALIFORNIA

2-1-10
PLANS APPROVAL DATE

THE STATE OF CALIFORNIA OR ITS OFFICERS OR AGENTS SHALL NOT BE RESPONSIBLE FOR THE ACCURACY OR COMPLETENESS OF ELECTRONIC COPIES OF THIS PLAN SHEET.

AECOM
999 TOWN & COUNTRY RD
ORANGE, CA 92868

ORANGE COUNTY
TRANSPORTATION AUTHORITY
550 S. MAIN STREET
ORANGE, CA 92863-1584

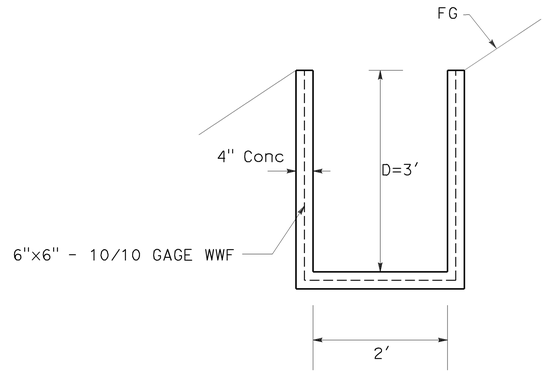

SECTION E-E

System 26 - 136.07' Lt "A" Sta 426+10.84 TO 141.52' Lt "A" Sta 435+79.00
System 26 - 142.30' Lt "A" Sta 436+66.00 TO 56.87' Rt "C-3" Sta 39+14.70
System 47 - 142.47' Lt "B-1" Sta 55+35.24 TO 76.40' Lt "B-1" Sta 55+42.50

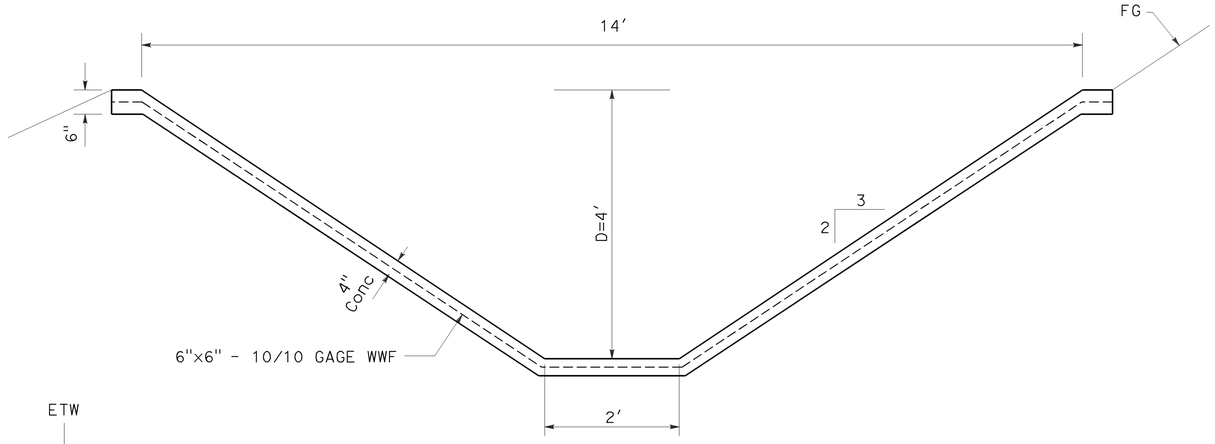

SECTION G-G

System 32 - 156.21' Lt "A" Sta 448+89.55 TO 206.34' Lt "A" Sta 448+73.97

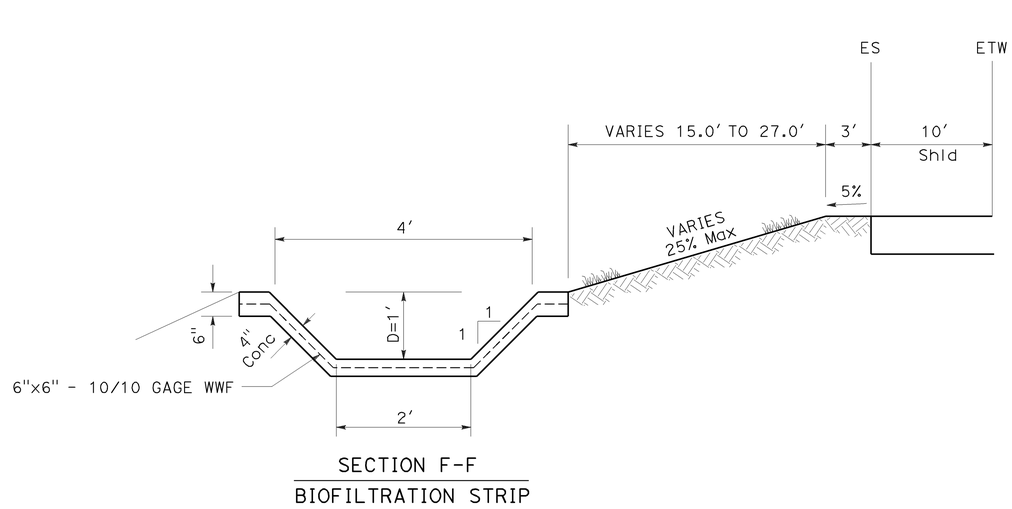

SECTION F-F
BIOFILTRATION STRIP

System 6 - 64.00'Lt "SB-3" Sta 35+62.58 TO 127.11' Lt "SB-3" Sta 34+43.08

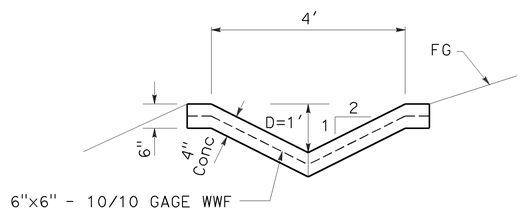

SECTION H-H

System 54 - 131.92' Rt "C-2" Sta 12+02.05 TO 85.88' Rt "C-2" Sta 12+51.13

CHANNEL TYPICAL CROSS SECTIONS

THIS PLAN ACCURATE FOR DRAINAGE WORK ONLY

DRAINAGE DETAILS

NO SCALE

DD-16

STATE OF CALIFORNIA - DEPARTMENT OF TRANSPORTATION — Caltrans

CONSULTANT FUNCTIONAL SUPERVISOR: ANDRZEJ NOWAK

CALCULATED-DESIGNED BY: RASHOD GIBSON
CHECKED BY: BROOKE RIVERA

REVISED BY: DUC TRAN — DATE REVISED: 8/10/09

LAST REVISION DATE PLOTTED => 03-FEB-2010
TIME PLOTTED => 10:39
08-10-09

BORDER LAST REVISED 8/1/2008

RELATIVE BORDER SCALE IS IN INCHES 0 1 2 3

USERNAME => s135318
DGN FILE => c07163ic016.dgn

CU 12235

EA 071631

Dist	COUNTY	ROUTE	POST MILES TOTAL PROJECT	SHEET No.	TOTAL SHEETS
12	Ora	22,405, 605	R0.3/R0.9, 22.3/24.0,3.0/R1.6	415	1929

REGISTERED CIVIL ENGINEER — DATE 8/10/09

JENNIFER BROOKE RIVERA No. C70332 Exp. 09/30/10 CIVIL — REGISTERED PROFESSIONAL ENGINEER — STATE OF CALIFORNIA

2-1-10
PLANS APPROVAL DATE

THE STATE OF CALIFORNIA OR ITS OFFICERS OR AGENTS SHALL NOT BE RESPONSIBLE FOR THE ACCURACY OR COMPLETENESS OF ELECTRONIC COPIES OF THIS PLAN SHEET.

AECOM
999 TOWN & COUNTRY RD
ORANGE, CA 92868

ORANGE COUNTY
TRANSPORTATION AUTHORITY
550 S. MAIN STREET
ORANGE, CA 92863-1584

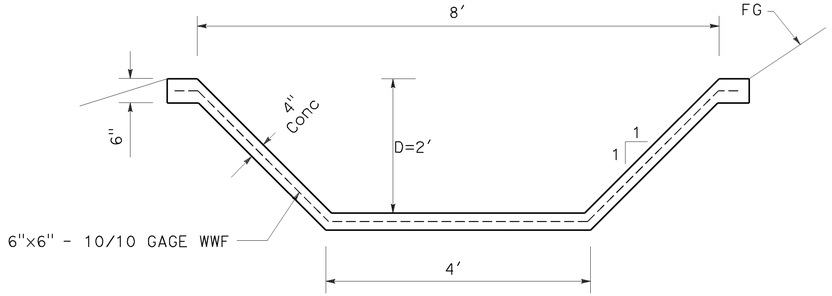

SECTION I-I

System 34 - 150.34′ Rt "A" Sta 452+68.79 TO 165.69′ Rt "A" Sta 453+30.29
System 35 - 172.35′ Rt "A" Sta 454+46.78 TO 149.50′ Rt "A" Sta 462+48.43

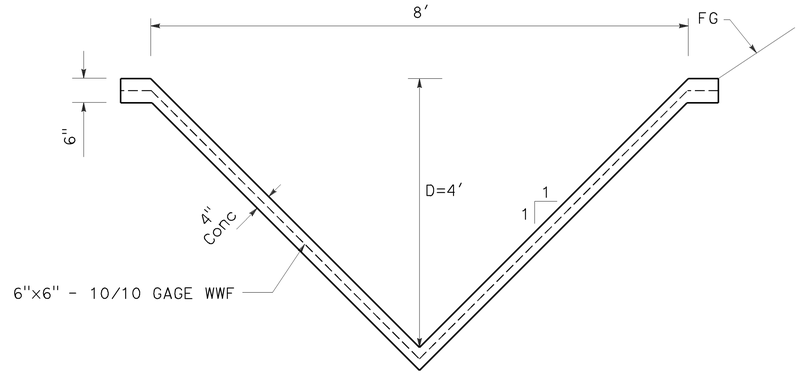

SECTION J-J

System 66 - 35.90′ Lt "B-1" Sta 20+77.01 TO 120.25′ Lt "A-1" Sta 112+86.19

CHANNEL TYPICAL CROSS SECTIONS

THIS PLAN ACCURATE FOR DRAINAGE WORK ONLY

DRAINAGE DETAILS
NO SCALE
DD-17

STATE OF CALIFORNIA - DEPARTMENT OF TRANSPORTATION
Caltrans
CONSULTANT FUNCTIONAL SUPERVISOR: ANDRZEJ NOWAK
CALCULATED-DESIGNED BY: RASHOD GIBSON
CHECKED BY: BROOKE RIVERA
REVISED BY: DUC TRAN
DATE REVISED: 8/10/09

LAST REVISION DATE PLOTTED => 03-FEB-2010
TIME PLOTTED => 10:39
08-10-09

BORDER LAST REVISED 8/1/2008
RELATIVE BORDER SCALE IS IN INCHES 0 1 2 3
USERNAME => s135318
DGN FILE => c071631c017.dgn
CU 12235
EA 071631

Dist	COUNTY	ROUTE	POST MILES TOTAL PROJECT	SHEET No.	TOTAL SHEETS
12	Ora	22,405, 605	R0.3/R0.9, 22.3/24.0,3.0/R1.6	416	1929

REGISTERED CIVIL ENGINEER — 8/10/09 DATE

JENNIFER BROOKE RIVERA No. C70332 Exp. 09/30/10 CIVIL — REGISTERED PROFESSIONAL ENGINEER — STATE OF CALIFORNIA

2-1-10
PLANS APPROVAL DATE

THE STATE OF CALIFORNIA OR ITS OFFICERS OR AGENTS SHALL NOT BE RESPONSIBLE FOR THE ACCURACY OR COMPLETENESS OF ELECTRONIC COPIES OF THIS PLAN SHEET.

AECOM
999 TOWN & COUNTRY RD
ORANGE, CA 92868

ORANGE COUNTY
TRANSPORTATION AUTHORITY
550 S. MAIN STREET
ORANGE, CA 92863-1584

ROCK SLOPE PROTECTION

SYSTEM No.	UNIT	PROTECTION CLASS	PLACEMENT METHOD	D PIPE ø (IN)	L RSP PROTECTION (FT)	W_1 (FT)	W (FT)
7	b	FACING	B	24	4.5	6.0	8.0
37	b	FACING	B	24	4.0	8.0	9.5
38	a	FACING	B	18	5.5	4.5	6.5
43	a	FACING	B	24	6.0	6.0	8.5
47	b	FACING	B	/	20.0	4.74	22.0
59	a	FACING	B	24	3.5	6.0	7.5
87	a	FACING	B	18	5.0	4.5	6.5
88	a	FACING	B	18	3.5	4.5	6.0
92	b	FACING	B	/	8.0	3.0	6.0

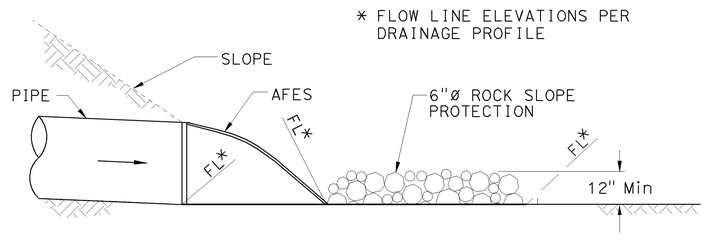

PROFILE VIEW

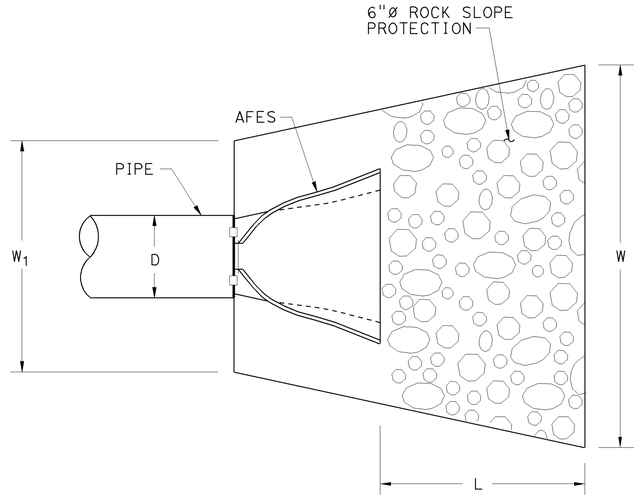

TYPICAL PLAN VIEW

ROCK SLOPE PROTECTION DETAIL 1

THIS PLAN ACCURATE FOR DRAINAGE WORK ONLY

DETAIL 1 DRAINAGE DETAILS

NO SCALE

DD-18

STATE OF CALIFORNIA - DEPARTMENT OF TRANSPORTATION — Caltrans

CONSULTANT FUNCTIONAL SUPERVISOR: ANDRZEJ NOWAK

CALCULATED-DESIGNED BY: RASHOD GIBSON
CHECKED BY: BROOKE RIVERA
REVISED BY: DUC TRAN
DATE REVISED: 8/10/09

LAST REVISION DATE PLOTTED => 03-FEB-2010
TIME PLOTTED => 10:39
08-10-09

BORDER LAST REVISED 8/1/2008

RELATIVE BORDER SCALE IS IN INCHES 0 1 2 3

USERNAME => s135318
DGN FILE => c071631c018.dgn

CU 12235

EA 071631

Dist	COUNTY	ROUTE	POST MILES TOTAL PROJECT	SHEET No.	TOTAL SHEETS
12	Ora	22,405, 605	R0.3/R0.9, 22.3/24.0,3.0/R1.6	417	1929

REGISTERED CIVIL ENGINEER — DATE 8/10/09

JENNIFER BROOKE RIVERA No. C70332 Exp.09/30/10 CIVIL — REGISTERED PROFESSIONAL ENGINEER — STATE OF CALIFORNIA

2-1-10
PLANS APPROVAL DATE

THE STATE OF CALIFORNIA OR ITS OFFICERS OR AGENTS SHALL NOT BE RESPONSIBLE FOR THE ACCURACY OR COMPLETENESS OF ELECTRONIC COPIES OF THIS PLAN SHEET.

AECOM
999 TOWN & COUNTRY RD
ORANGE, CA 92868

ORANGE COUNTY
TRANSPORTATION AUTHORITY
550 S. MAIN STREET
ORANGE, CA 92863-1584

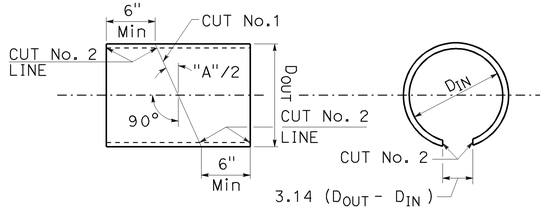

DETAIL B

(SONO-TUBE, OR EQUAL, INTERIOR FORM)

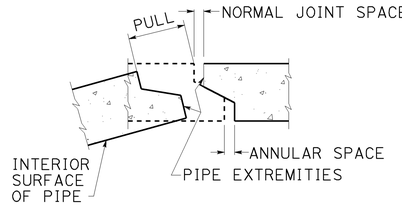

DETAIL A

TYPICAL JOINT FOR
REINFORCED CONCRETE PIPE

TABLE

D_2 (INCHES)	L (INCHES)	T (INCHES)	PERMITTED DEFLECTION, A
12	12	4	2°14′
15	12	4	1°55′
18	12	5	1°40′
21	12	5	1°29′
24	12	6	1°20′
27	12	7	1°13′
30	12	7	1°07′
33	18	8	1°01′
36	18	9	1°01′
39	18	9	1°09′
42	18	9	1°05′
45	18	10	1°01′
48	18	10	0°58′
51	18	10	0°55′
54	18	10	0°52′
57	18	10	0°49′
60	21	11	0°45′
66	21	11	0°43′

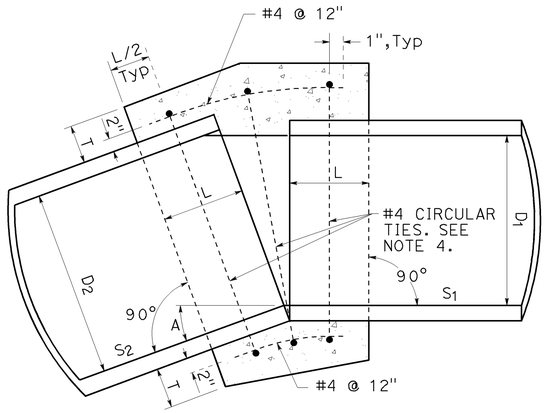

PLAN

REINFORCED CONCRETE COLLAR DETAIL 2

TUBE FORM NOTES:

1. CUT No. 1: SAW THE TUBE AT AN ANGLE OF "A"/2 WITH THE TRAVERSE PLANE. REVERSE ONE SECTION AND TAPE BOTH SECTIONS TOGETHER FORMING THE DEFLECTION ANGLE "A".
2. CUT No. 2: SAW THE TUBE LONGITUDINALLY, REMOVING A STRIP 3.14 (D_{OUT}- D_{IN}) INCHES WIDE ON THE SIDE OPPOSITE THE OPEN JOINT. BEND THE ENDS OF THE CUT TOGETHER AND INSERT THE TUBE IN THE PIPE.

NOTES:

1. A CONCRETE IS COLLAR IS REQUIRED WHENEVER D_1 IS UNEQUAL TO D_2 OR THE PERMITTED DEFLECTION AT A PIPE JOINT IS EXCEEDED; THAT IS, WHEN ANGLE "A" IS GREATER THAN THE PERMITTED DEFLECTION ANGLE. (SEE TABLE).
2. CONCRETE COLLARS SHALL NOT BE CONSTRUCTED ON MAIN LINE STORM DRAIN UNLESS SHOWN ON THE PLANS OR ORDERED BY THE ENGINEER.
3. REINFORCING SHALL BE USED WHERE THE PIPE DIAMETER IS GREATER THAN 21 INCHES AND ON ALL PIPES WHERE THE PULL BETWEEN THE EXTREMITIES (SEE DETAIL A) IS 2 1/2 INCHES OR LARGER.
4. CIRCULAR TIES:

PIPE DIAMETER	SPACE BETWEEN PIPE EXTREMITIES	No. OF CIRCULAR TIES
21" OR LESS	2 1/2"	3
24" TO 30"	2 1/2" OR LESS	3
33" TO 57"	2 1/2" OR LESS	4
60" TO 66"	2 1/2" OR LESS	5

WHERE THE SPACE BETWEEN THE PIPE EXTREMITIES EXCEEDS 2 1/2 INCHES, THE NUMBER OF CIRCULAR TIES SHALL BE INCREASED TO MAINTAIN A MAXIMUM SPACING OF 6 INCHES CENTER TO CENTER. CIRCULAR TIES SHALL HAVE A DIAMETER 5 INCHES GREATER THAN THE OUTSIDE DIAMETER OF THE LARGER PIPE.

5. FOR PIPE LARGER THAN 66 INCHES IN DIAMETER A SPECIAL COLLAR DETAIL SHALL BE DELINEATED ON THE PROJECT PLANS.
6. WHERE THE PIPE IS 21 INCHES OR LESS IN DIAMETER, AN INTERIOR FORM OF UNSEALED SONO-TUBE, OR EQUAL (SEE DETAIL B), SHALL BE USED TO PROVIDE A SMOOTH INTERIOR JOINT. THE PAPER FORM MAY BE LEFT IN PLACE. WHEN THE PIPE IS 24 INCHES OR LARGER A REMOVABLE INTERIOR FORM SHALL BE USED OR THE INTERIOR JOINT SHALL BE COMPLETELY FILLED WITH MORTAR AND NEATLY POINTED.
7. WHERE PIPES OF DIFFERENT DIAMETERS ARE JOINTED WITH A CONCRETE COLLAR, L SHALL BE THAT OF THE LARGER PIPE AND THE EXTERNAL DIAMETER OF THE COLLAR SHALL BE EQUAL TO THE OUTSIDE DIAMETER OF LARGER PIPE PLUS 2T FOR THE LARGER PIPE. A CONCRETE COLLAR SHALL NOT BE CONSTRUCTED CONNECTING A LARGER DIAMETER PIPE UPSTREAM TO A SMALLER DIAMETER PIPE DOWNSTREAM UNLESS SHOWN ON THE IMPROVEMENT PLANS OR ORDERED BY THE ENGINEER.
8. THE VALUE FOR ANGLE "A" SHALL BE SHOWN ON THE IMPROVEMENT PLANS.
9. WHERE THE SLOPE OF THE UPSTREAM PIPE IS GREATER THAN THE SLOPE OF THE DOWNSTREAM PIPE, JOIN SOFFITS. WHERE THE SLOPE OF THE UPSTREAM PIPE IS LESS THAN DOWNSTREAM THE SLOPE OF THE DOWNSTREAM PIPE, JOIN INVERTS.
10. BEVELED PIPE MAY BE USED IN LIEU OF A CONCRETE COLLAR IF APPROVED BY THE ENGINEER.
11. FOR PIPE SIZE NOT LISTED IN THE TABLE, USE VALUES OF L, T, & "A" FOR THE NEXT LARGER SIZE LISTED.

DETAIL 2
DRAINAGE DETAILS

NO SCALE

DD-19

THIS PLAN ACCURATE FOR DRAINAGE WORK ONLY

CALCULATED-DESIGNED BY: RASHOD GIBSON
CHECKED BY: BROOKE RIVERA
REVISED BY: DUC TRAN
DATE REVISED: 8/10/09
CONSULTANT FUNCTIONAL SUPERVISOR: ANDRZEJ NOWAK
STATE OF CALIFORNIA - DEPARTMENT OF TRANSPORTATION
Caltrans

LAST REVISION: 08-10-09
DATE PLOTTED => 03-FEB-2010
TIME PLOTTED => 10:39

BORDER LAST REVISED 8/1/2008
RELATIVE BORDER SCALE IS IN INCHES 0 1 2 3
USERNAME => s135318
DGN FILE => c071631c019.dgn
CU 12235
EA 071631

Dist	COUNTY	ROUTE	POST MILES TOTAL PROJECT	SHEET No.	TOTAL SHEETS
12	Ora	22,405, 605	R0.3/R0.9, 22.3/24.0,3.0/R1.6	418	1929

REGISTERED CIVIL ENGINEER DATE

2-1-10
PLANS APPROVAL DATE

REGISTERED PROFESSIONAL ENGINEER — No. Exp. CIVIL — STATE OF CALIFORNIA

THE STATE OF CALIFORNIA OR ITS OFFICERS OR AGENTS SHALL NOT BE RESPONSIBLE FOR THE ACCURACY OR COMPLETENESS OF ELECTRONIC COPIES OF THIS PLAN SHEET.

AECOM
999 TOWN & COUNTRY RD
ORANGE, CA 92868

ORANGE COUNTY
TRANSPORTATION AUTHORITY
550 S. MAIN STREET
ORANGE, CA 92863-1584

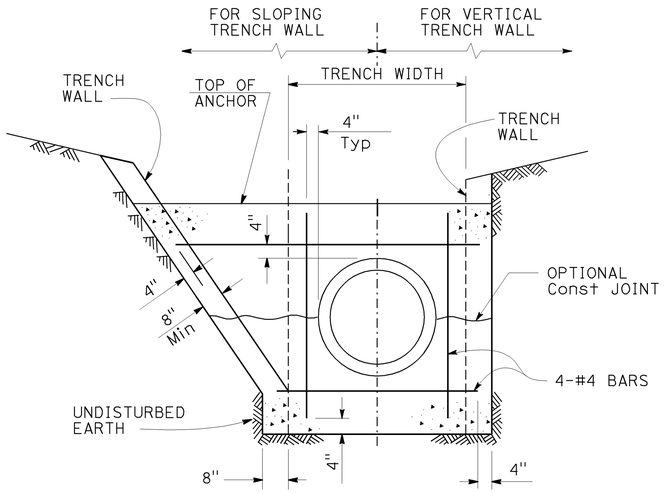

SECTION A-A

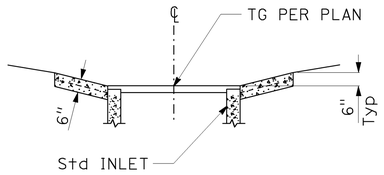

SECTION C-C

TABLE

PIPE SLOPE (%)	L DISTANCE (Max)	Z DISTANCE (Max)
100	12 ft	4 ft
67	14 ft	8 ft
50	16 ft	12 ft
40	18 ft	18 ft
33	20 ft	20 ft

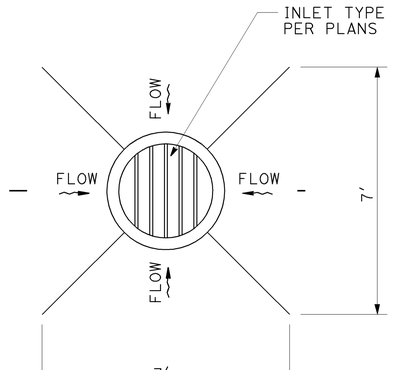

PLAN

CONCRETE APRON
DETAIL 4

2D 31 34

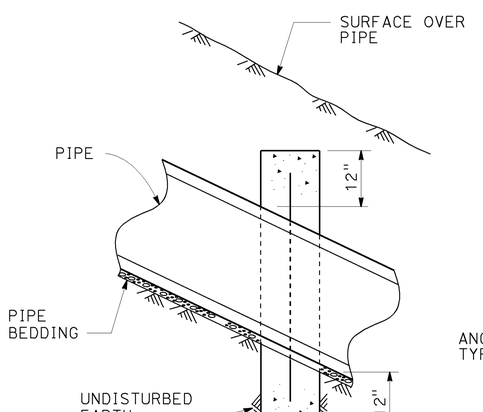

SECTION B-B

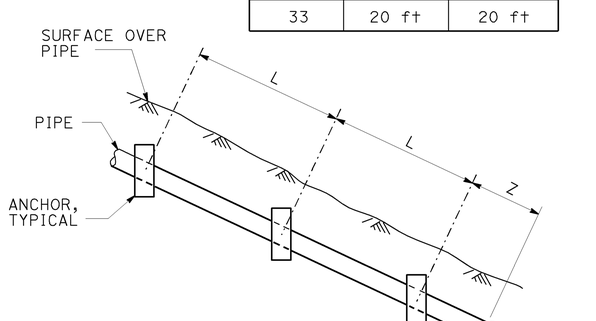

ELEVATION

PIPE ANCHORS
DETAIL 3

9 44A 54 55 58A

NOTES:

1. ANCHORS SHALL BE MINOR CONCRETE (MINOR STRUCTURE).
2. SPACING OF ANCHORS FOR PIPE SLOPES BETWEEN VALUES SHOWN IN TABLE "A" MAY BE PROPORTIONED.

THIS PLAN ACCURATE FOR DRAINAGE WORK ONLY

DETAIL 3, DETAIL 4 DRAINAGE DETAILS

DD-20

LAST REVISION 08-10-09 | DATE PLOTTED => 03-FEB-2010 | TIME PLOTTED => 10:39

CALCULATED-DESIGNED BY	REVISED BY	RASHOD GIBSON	CONSULTANT FUNCTIONAL SUPERVISOR	STATE OF CALIFORNIA - DEPARTMENT OF TRANSPORTATION
CHECKED BY	DATE REVISED	BROOKE RIVERA	ANDRZEJ NOWAK	Caltrans
DUC TRAN	8/10/09			

BORDER LAST REVISED 8/1/2008 | RELATIVE BORDER SCALE IS IN INCHES 0 1 2 3 | USERNAME => s135318 DGN FILE => c071631c020.dgn | CU 12235 | EA 071631

Dist	COUNTY	ROUTE	POST MILES TOTAL PROJECT	SHEET No.	TOTAL SHEETS
12	Ora	22,405, 605	R0.3/R0.9, 22.3/24.0,3.0/R1.6	419	1929

REGISTERED CIVIL ENGINEER — DATE

REGISTERED PROFESSIONAL ENGINEER — JENNIFER BROOKE RIVERA — No. C70332 — Exp. 09/30/10 — CIVIL — STATE OF CALIFORNIA

2-1-10
PLANS APPROVAL DATE

THE STATE OF CALIFORNIA OR ITS OFFICERS OR AGENTS SHALL NOT BE RESPONSIBLE FOR THE ACCURACY OR COMPLETENESS OF ELECTRONIC COPIES OF THIS PLAN SHEET.

AECOM
999 TOWN & COUNTRY RD
ORANGE, CA 92868

ORANGE COUNTY
TRANSPORTATION AUTHORITY
550 S. MAIN STREET
ORANGE, CA 92863-1584

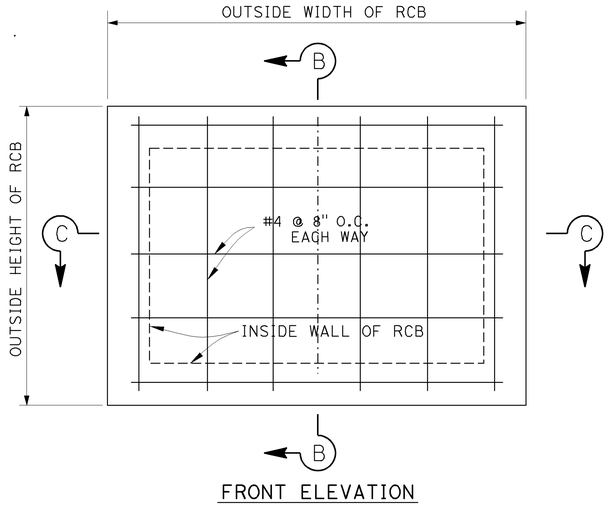

FRONT ELEVATION

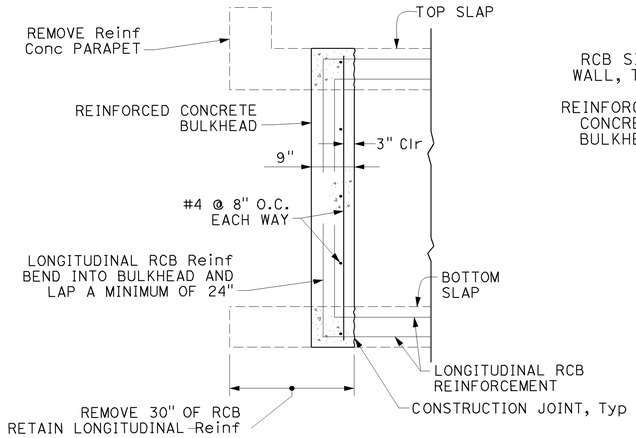

SECTION B-B

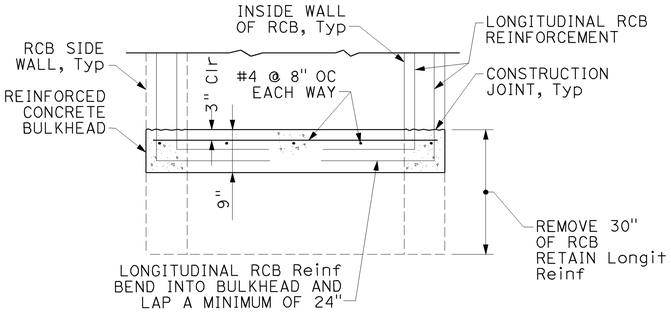

SECTION C-C

RCB BULKHEAD DETAIL 6

32 37

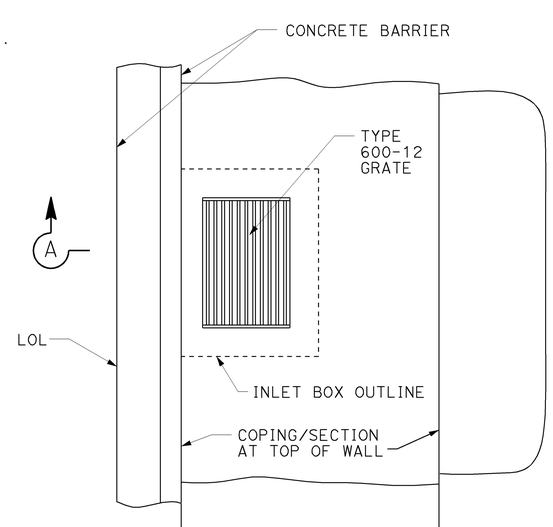

PLAN

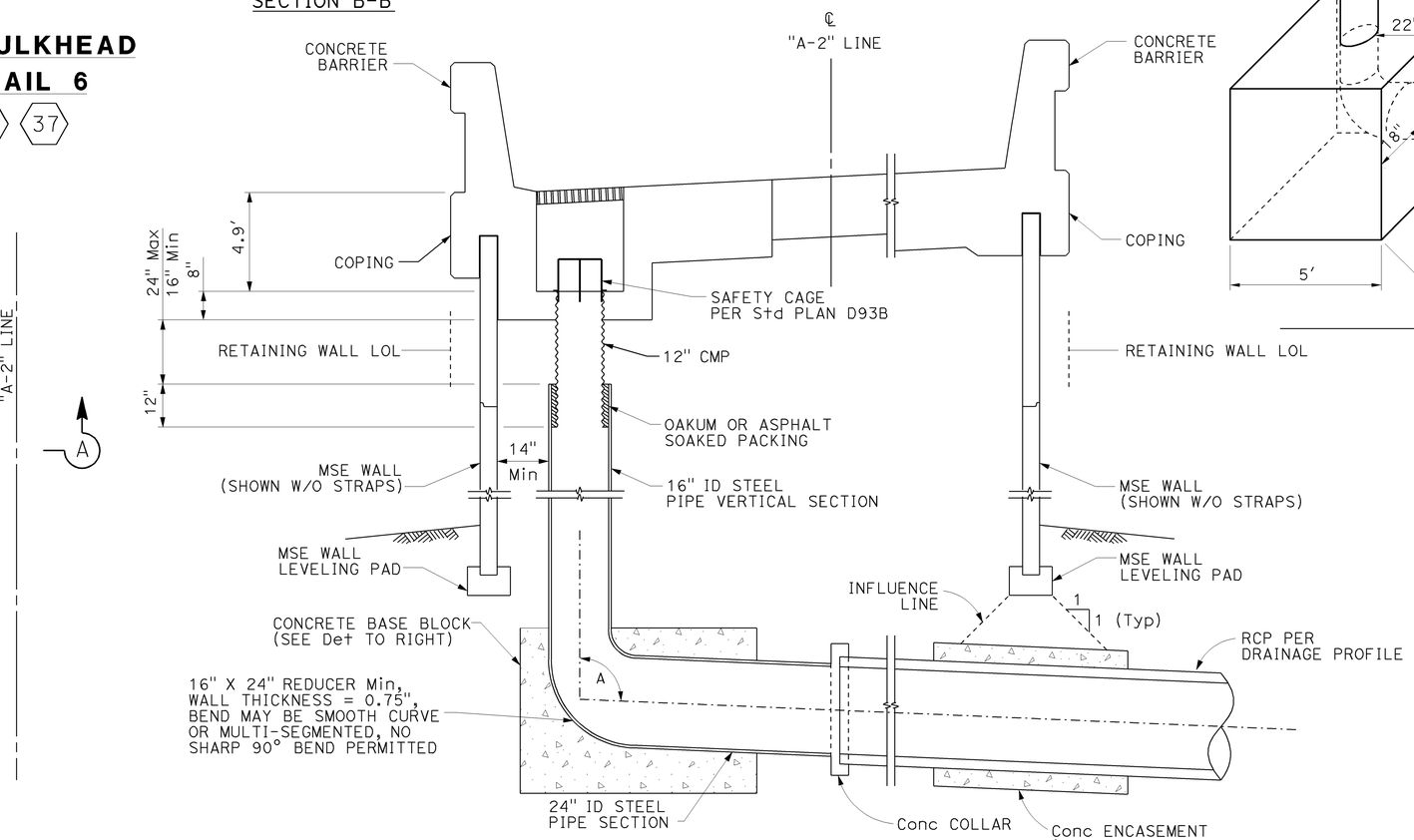

SECTION A-A

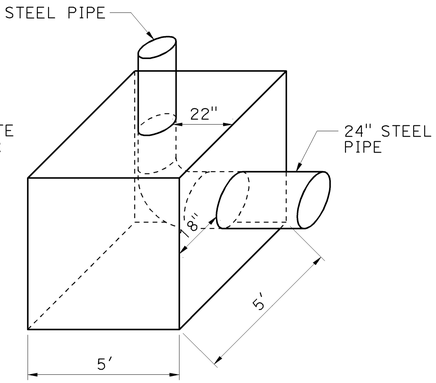

DRAINAGE INLET VERTICAL DROP CONNECTION DETAIL 5

30A 30B 30C 30D 30E 30F

THIS PLAN ACCURATE FOR DRAINAGE WORK ONLY

DETAIL 5, DETAIL 6 DRAINAGE DETAILS

NO SCALE

DD-21

STATE OF CALIFORNIA - DEPARTMENT OF TRANSPORTATION
Caltrans
CONSULTANT FUNCTIONAL SUPERVISOR: ANDRZEJ NOWAK
CALCULATED-DESIGNED BY: RASHOD GIBSON
CHECKED BY: BROOKE RIVERA
REVISED BY: DUC TRAN
DATE REVISED: 8/10/09

LAST REVISION | DATE PLOTTED => 03-FEB-2010
08-10-09 | TIME PLOTTED => 10:39

BORDER LAST REVISED 8/1/2008 | RELATIVE BORDER SCALE IS IN INCHES 0 1 2 3 | USERNAME => s135318 | DGN FILE => c071631c021.dgn | CU 12235 | EA 071631

Dist	COUNTY	ROUTE	POST MILES TOTAL PROJECT	SHEET No.	TOTAL SHEETS
12	Ora	22,405, 605	R0.3/R0.9, 22.3/24.0,3.0/R1.6	420	1929

8/10/09
REGISTERED CIVIL ENGINEER DATE

REGISTERED PROFESSIONAL ENGINEER
JENNIFER BROOKE RIVERA
No. C70332
Exp. 09/30/10
CIVIL
STATE OF CALIFORNIA

2-1-10
PLANS APPROVAL DATE

THE STATE OF CALIFORNIA OR ITS OFFICERS OR AGENTS SHALL NOT BE RESPONSIBLE FOR THE ACCURACY OR COMPLETENESS OF ELECTRONIC COPIES OF THIS PLAN SHEET.

AECOM
999 TOWN & COUNTRY RD
ORANGE, CA 92868

ORANGE COUNTY
TRANSPORTATION AUTHORITY
550 S. MAIN STREET
ORANGE, CA 92863-1584

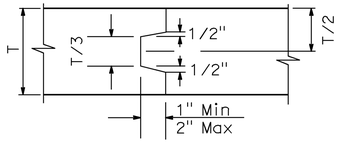

DETAIL A

TRANSVERSE CONSTRUCTION JOINT

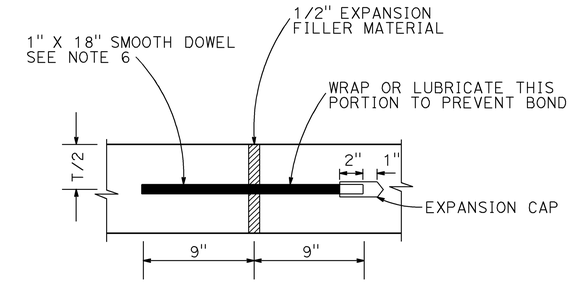

DETAIL B

TRANSVERSE EXPANSION JOINT

NOTES:

1. ALL LONGITUDINAL BARS SHALL BE #4 @ 18 INCHES. PLACE BARS IN BOTTOM SLAB SYMMETRICALLY ABOUT CENTERLINE. PLACE BARS IN WALLS STARTING AT TOP WITH 2 INCHES CLEAR COVER.
2. CLEAR COVER FOR STEEL SHALL BE 2 INCHES EACH FACE FOR WALLS AND 3 INCHES EACH FACE FOR BOTTOM SLAB.
3. STEEL IS DIMENSIONED TO BACK OF BAR BEND.
4. FOR CONSTRUCTION ON CURVES, STRAIGHT TRANSVERSE BARS IN THE SLAB SHALL BE ALIGNED RADIALLY WITH SPACING MEASURED AT WALLS. FOR L-BARS IN WALLS, SPACING SHALL BE MEASURE BETWEEN VERTICAL LEGS OF BARS.
5. ALL TRANSVERSE CONSTRUCTION JOINTS SHALL BE IN A VERTICAL PLANE NORMAL TO THE CENTERLINE. CONTINUOUS KEYWAYS SHALL BE CONSTRUCTED AS SHOWN IN DETAIL A. A COMPLETE CURTAIN OF TRANSVERSE STEEL SHALL BE PLACED 3 INCHES FROM EACH FACE OF THE JOINTS AND LONGITUDINAL STEEL WILL NOT BE CONTINUOUS THROUGH THE JOINTS. AN EXPANSION JOINT SHALL BE CONSTRUCTED BETWEEN THE REINFORCED CONCRETE TRANSITION AND REINFORCED CONCRETE BOX OR CHANNEL SECTIONS AS SHOWN DETAIL B. DOWELS SHALL BE PLACED AT 18 INCHES SPACING CENTERED IN THE MIDDLE OF THE BOTTOM SLAB AND THE TOP THIRD OF SIDE WALLS. A MINIMUM OF 3 DOWELS PER SLAB AND WALLS SHALL BE PLACED.
6. THE LENGTH OF SECTIONS L1, L2 AND L3 ARE NOT NECESSARILY EQUAL. THE TOP OF TRANSITION SHALL BE STRAIGHT ALONG ITS ENTIRE LENGTH.

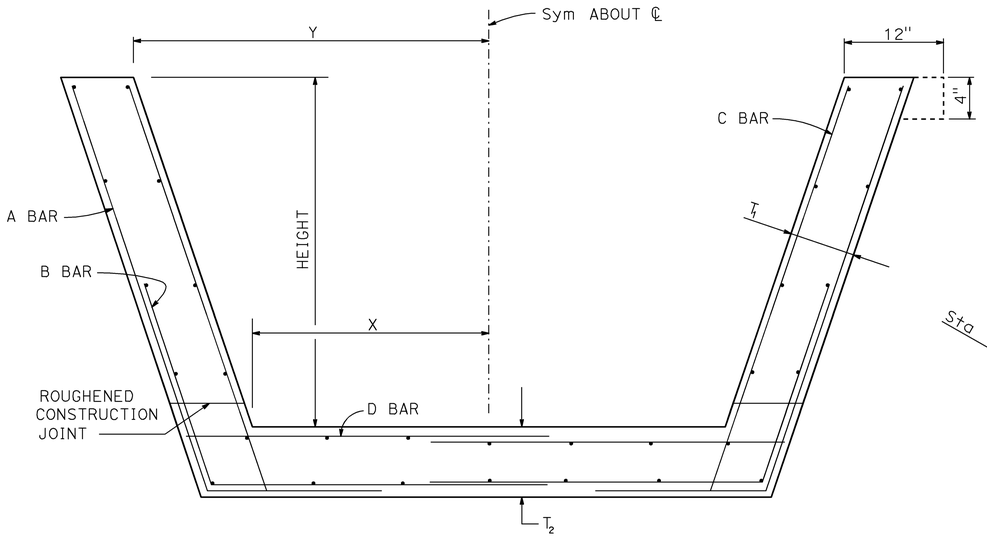

TYPICAL SECTION

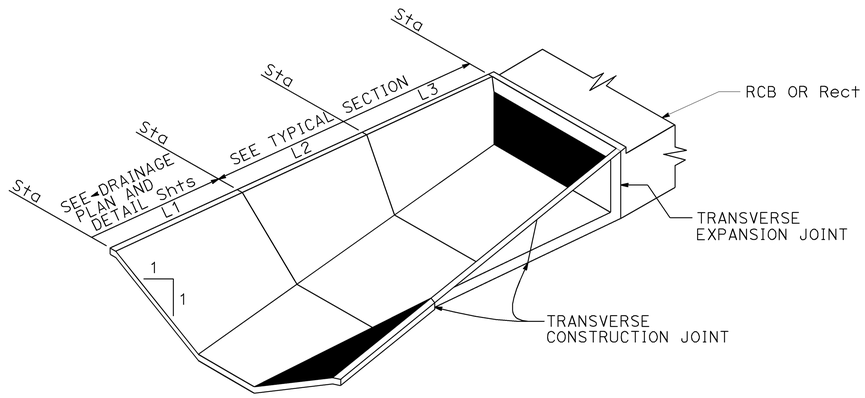

TRANSITION

BOX TO TRAPEZODIAL CHANNEL
DETAIL 7

THIS PLAN ACCURATE FOR DRAINAGE WORK ONLY

10 19 32

DETAIL 7
DRAINAGE DETAILS

NO SCALE

DD-22

CALCULATED-DESIGNED BY	CHECKED BY	REVISED BY	DATE REVISED
RASHOD GIBSON	BROOKE RIVERA	DUC TRAN	8/10/09

CONSULTANT FUNCTIONAL SUPERVISOR: ANDRZEJ NOWAK

STATE OF CALIFORNIA - DEPARTMENT OF TRANSPORTATION
Caltrans

LAST REVISION 08-10-09
DATE PLOTTED => 03-FEB-2010
TIME PLOTTED => 10:40

BORDER LAST REVISED 8/1/2008

RELATIVE BORDER SCALE IS IN INCHES 0 1 2 3

USERNAME => s135318
DGN FILE => c071631c022.dgn

CU 12235

EA 071631

Dist	COUNTY	ROUTE	POST MILES TOTAL PROJECT	SHEET No.	TOTAL SHEETS
12	Ora	22,405, 605	R0.3/R0.9, 22.3/24.0,3.0/R1.6	421	1929

REGISTERED CIVIL ENGINEER 8/10/09 DATE

2-1-10
PLANS APPROVAL DATE

REGISTERED PROFESSIONAL ENGINEER JENNIFER BROOKE RIVERA No. C70332 Exp. 09/30/10 CIVIL STATE OF CALIFORNIA

THE STATE OF CALIFORNIA OR ITS OFFICERS OR AGENTS SHALL NOT BE RESPONSIBLE FOR THE ACCURACY OR COMPLETENESS OF ELECTRONIC COPIES OF THIS PLAN SHEET.

AECOM
999 TOWN & COUNTRY RD
ORANGE, CA 92868

ORANGE COUNTY
TRANSPORTATION AUTHORITY
550 S. MAIN STREET
ORANGE, CA 92863-1584

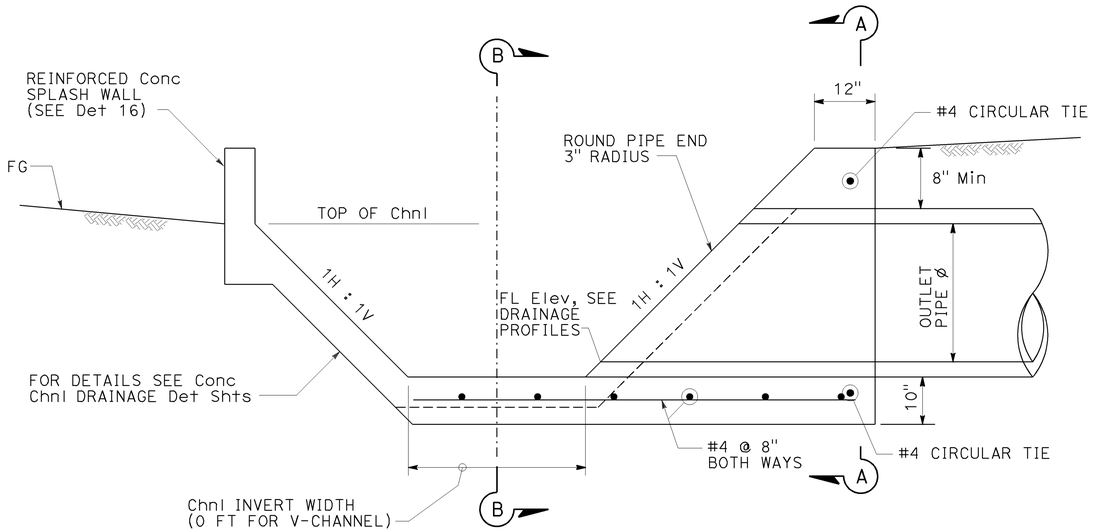

SECTION C-C
AT TRAPEZOIDAL/V-DITH

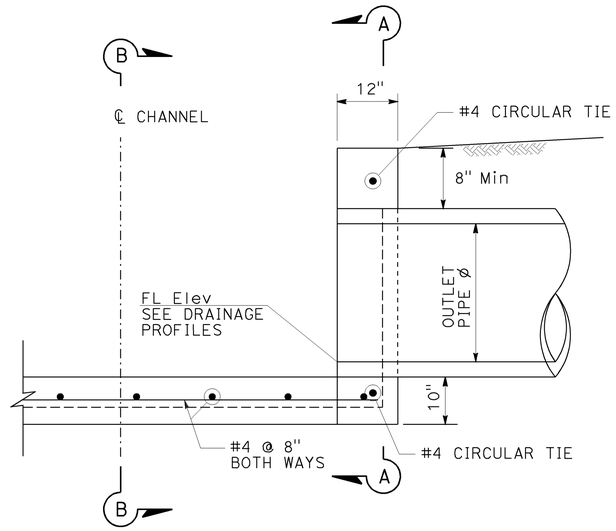

SECTION C-C
AT RECTANGULAR CHANNEL

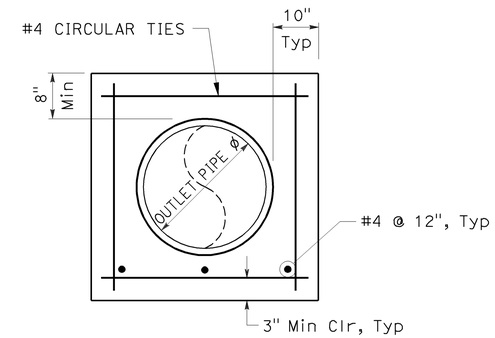

SECTION A-A

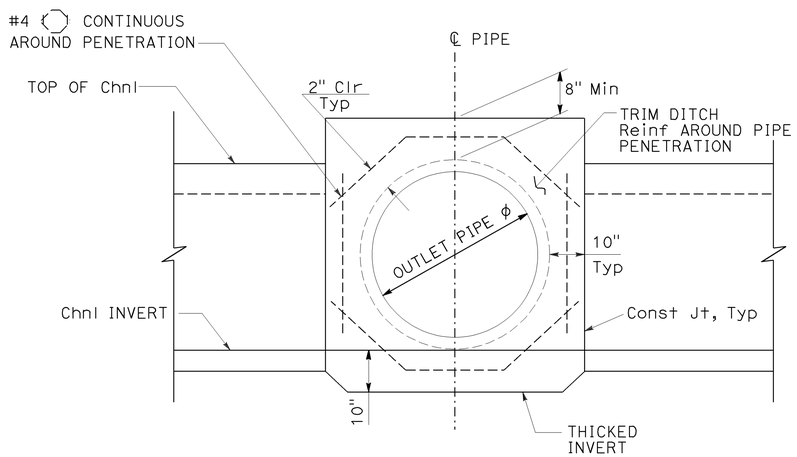

SECTION B-B
PIPE PENETRATION

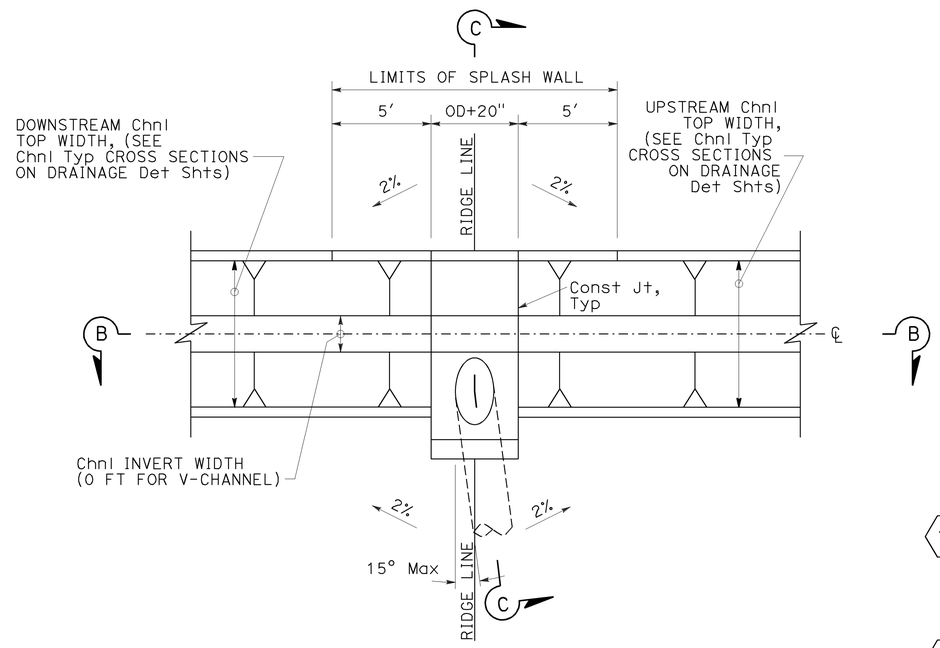

PLAN

1A 5 14 16 20 22
23A 27 28 28A 40 53D
56 67 78 82 90

PIPE OUTLET CONCRETE CHANNEL CONNECTIONS
DETAIL 8

THIS PLAN ACCURATE FOR DRAINAGE WORK ONLY

DETAIL 8
DRAINAGE DETAILS
NO SCALE

DD-23

STATE OF CALIFORNIA - DEPARTMENT OF TRANSPORTATION
Caltrans

CONSULTANT FUNCTIONAL SUPERVISOR: ANDRZEJ NOWAK
CALCULATED-DESIGNED BY: RASHOD GIBSON
CHECKED BY: BROOKE RIVERA
REVISED BY: DUC TRAN
DATE REVISED: 8/10/09

LAST REVISION 08-10-09
DATE PLOTTED => 03-FEB-2010
TIME PLOTTED => 09:04

Dist	COUNTY	ROUTE	POST MILES TOTAL PROJECT	SHEET No.	TOTAL SHEETS
12	Ora	22,405, 605	R0.3/R0.9, 22.3/24.0,3.0/R1.6	422	1929

REGISTERED CIVIL ENGINEER — 8/10/09 DATE

JENNIFER BROOKE RIVERA No. C70332 Exp.09/30/10 CIVIL — REGISTERED PROFESSIONAL ENGINEER — STATE OF CALIFORNIA

2-1-10
PLANS APPROVAL DATE

THE STATE OF CALIFORNIA OR ITS OFFICERS OR AGENTS SHALL NOT BE RESPONSIBLE FOR THE ACCURACY OR COMPLETENESS OF ELECTRONIC COPIES OF THIS PLAN SHEET.

AECOM
999 TOWN & COUNTRY RD
ORANGE, CA 92868

ORANGE COUNTY TRANSPORTATION AUTHORITY
550 S. MAIN STREET
ORANGE, CA 92863-1584

DRAINAGE CURVE DATA				
NO	R	Δ	T	L
1	15.0	89°56′4"	160.46	23.55
2	20.0	35°02′23"	6.31	12.23
3	8.0	35°09′04"	2.77	5.53
4	8.0	38°29′36"	2.79	5.38

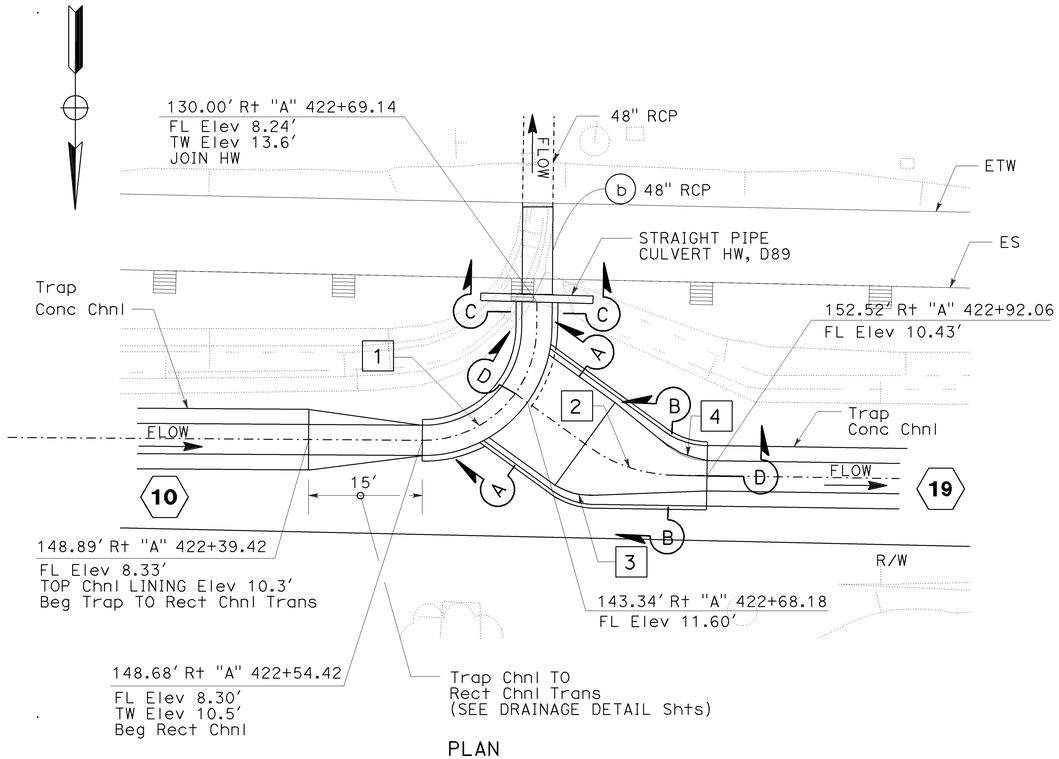

PLAN

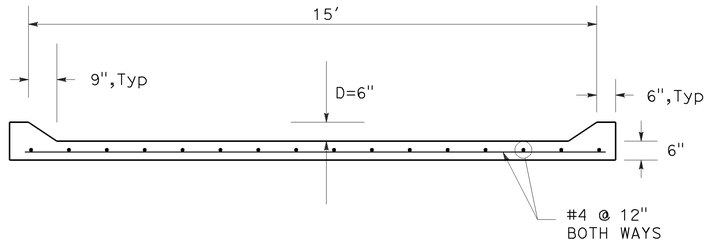

SECTION A-A
NO SCALE

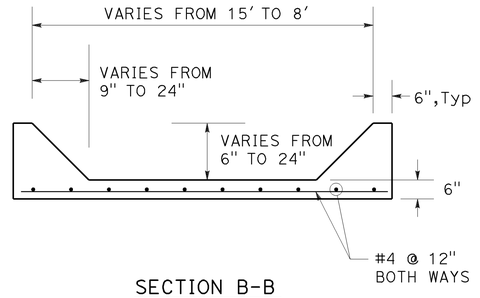

SECTION B-B
NO SCALE

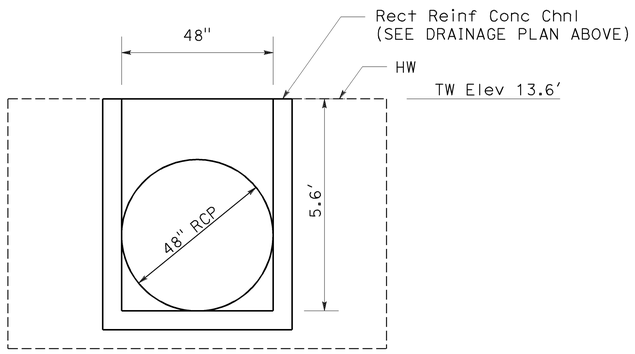

SECTION C-C
NO SCALE

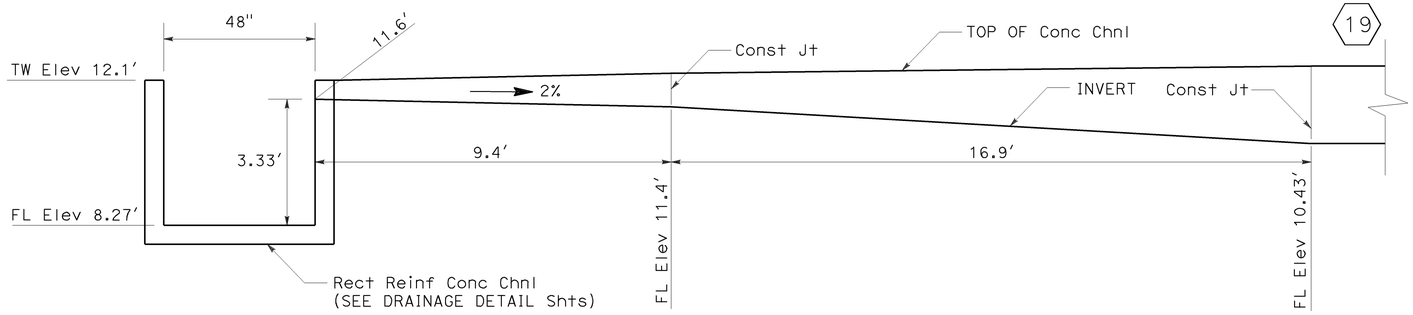

SECTION D-D
NO SCALE

OVERFLOW SPILLWAY
DETAIL 9

10 19

DETAIL 9
DRAINAGE DETAILS

SCALE: 1" = 10′

DD-24

THIS PLAN ACCURATE FOR DRAINAGE WORK ONLY

DUC TRAN 8/10/09
REVISED BY DATE REVISED
RASHOD GIBSON BROOKE RIVERA
CALCULATED-DESIGNED BY CHECKED BY
CONSULTANT FUNCTIONAL SUPERVISOR ANDRZEJ NOWAK
STATE OF CALIFORNIA - DEPARTMENT OF TRANSPORTATION
Caltrans

LAST REVISION DATE PLOTTED => 03-FEB-2010
08-10-09 TIME PLOTTED => 09:04

BORDER LAST REVISED 8/1/2008
RELATIVE BORDER SCALE IS IN INCHES 0 1 2 3
USERNAME => trmikesl
DGN FILE => c07163ic024.dgn
CU 12235
EA 071631

Dist	COUNTY	ROUTE	POST MILES TOTAL PROJECT	SHEET No.	TOTAL SHEETS
12	Ora	22,405, 605	R0.3/R0.9, 22.3/24.0,3.0/R1.6	423	1929

REGISTERED CIVIL ENGINEER — DATE 8/10/09

JENNIFER BROOKE RIVERA No. C70332 Exp. 09/30/10 CIVIL — REGISTERED PROFESSIONAL ENGINEER — STATE OF CALIFORNIA

2-1-10
PLANS APPROVAL DATE

THE STATE OF CALIFORNIA OR ITS OFFICERS OR AGENTS SHALL NOT BE RESPONSIBLE FOR THE ACCURACY OR COMPLETENESS OF ELECTRONIC COPIES OF THIS PLAN SHEET.

AECOM
999 TOWN & COUNTRY RD
ORANGE, CA 92868

ORANGE COUNTY
TRANSPORTATION AUTHORITY
550 S. MAIN STREET
ORANGE, CA 92863-1584

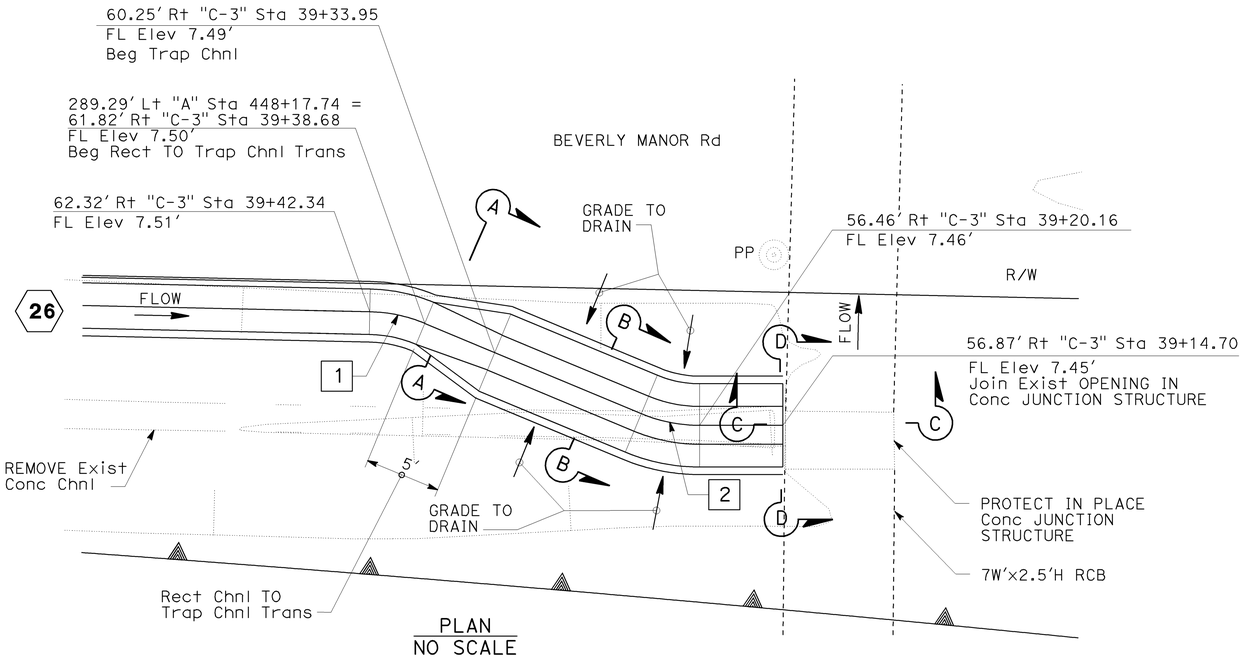

PLAN
NO SCALE

BOX CONNECTION CURVE DATA				
NO	R	Δ	T	L
1	10.0	21°23′20″	1.89	3.73
2	10.0	22°36′47″	2.00	3.95

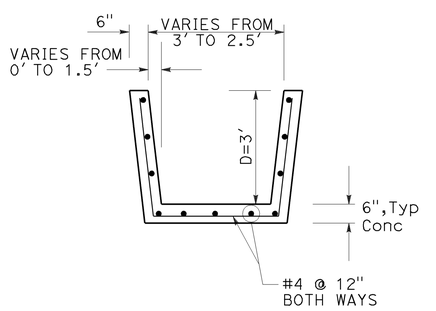

SECTION A-A

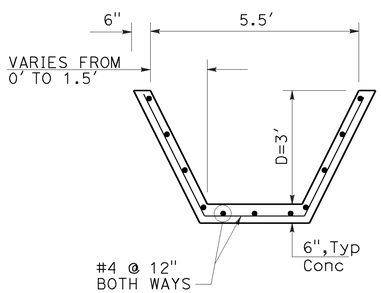

SECTION B-B
NO SCALE

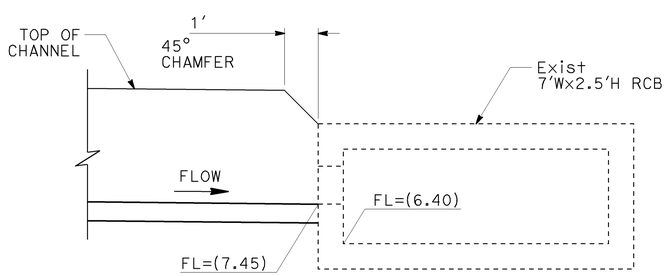

SECTION C-C
NO SCALE

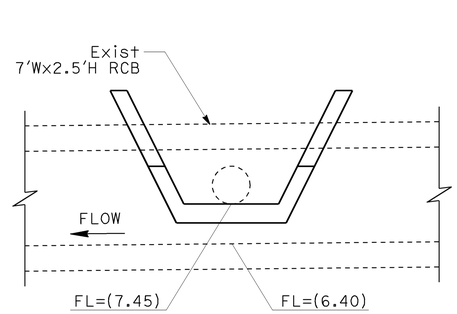

SECTION D-D
NO SCALE

CONCRETE CHANNEL BOX CONNECTION
DETAIL 10

26

THIS PLAN ACCURATE FOR DRAINAGE WORK ONLY

DETAIL 10
DRAINAGE DETAILS
SCALE: 1" = 5′

DD-25

STATE OF CALIFORNIA - DEPARTMENT OF TRANSPORTATION — Caltrans
CONSULTANT FUNCTIONAL SUPERVISOR: ANDRZEJ NOWAK
CALCULATED-DESIGNED BY: RASHOD GIBSON
CHECKED BY: BROOKE RIVERA
REVISED BY: DUC TRAN
DATE REVISED: 8/10/09

LAST REVISION DATE PLOTTED => 03-FEB-2010
LAST REVISION TIME PLOTTED => 09:04
08-10-09

BORDER LAST REVISED 8/1/2008
RELATIVE BORDER SCALE IS IN INCHES 0 1 2 3
USERNAME => trmikesl
DGN FILE => c07163ic025.dgn
CU 12235
EA 071631

Dist	COUNTY	ROUTE	POST MILES TOTAL PROJECT	SHEET No.	TOTAL SHEETS
12	Ora	22,405, 605	R0.3/R0.9, 22.3/24.0,3.0/R1.6	424	1929

REGISTERED CIVIL ENGINEER 8/10/09 DATE

2-1-10
PLANS APPROVAL DATE

REGISTERED PROFESSIONAL ENGINEER JENNIFER BROOKE RIVERA No. C70332 Exp. 09/30/10 CIVIL STATE OF CALIFORNIA

THE STATE OF CALIFORNIA OR ITS OFFICERS OR AGENTS SHALL NOT BE RESPONSIBLE FOR THE ACCURACY OR COMPLETENESS OF ELECTRONIC COPIES OF THIS PLAN SHEET.

AECOM
999 TOWN & COUNTRY RD
ORANGE, CA 92868

ORANGE COUNTY
TRANSPORTATION AUTHORITY
550 S. MAIN STREET
ORANGE, CA 92863-1584

BIOSWALE CONFLUENCE CURVE DATA

NO	R	Δ	T	L
1	70.00	15°57'48"	9.82	19.50
2	96.50	14°21'58"	12.16	24.20

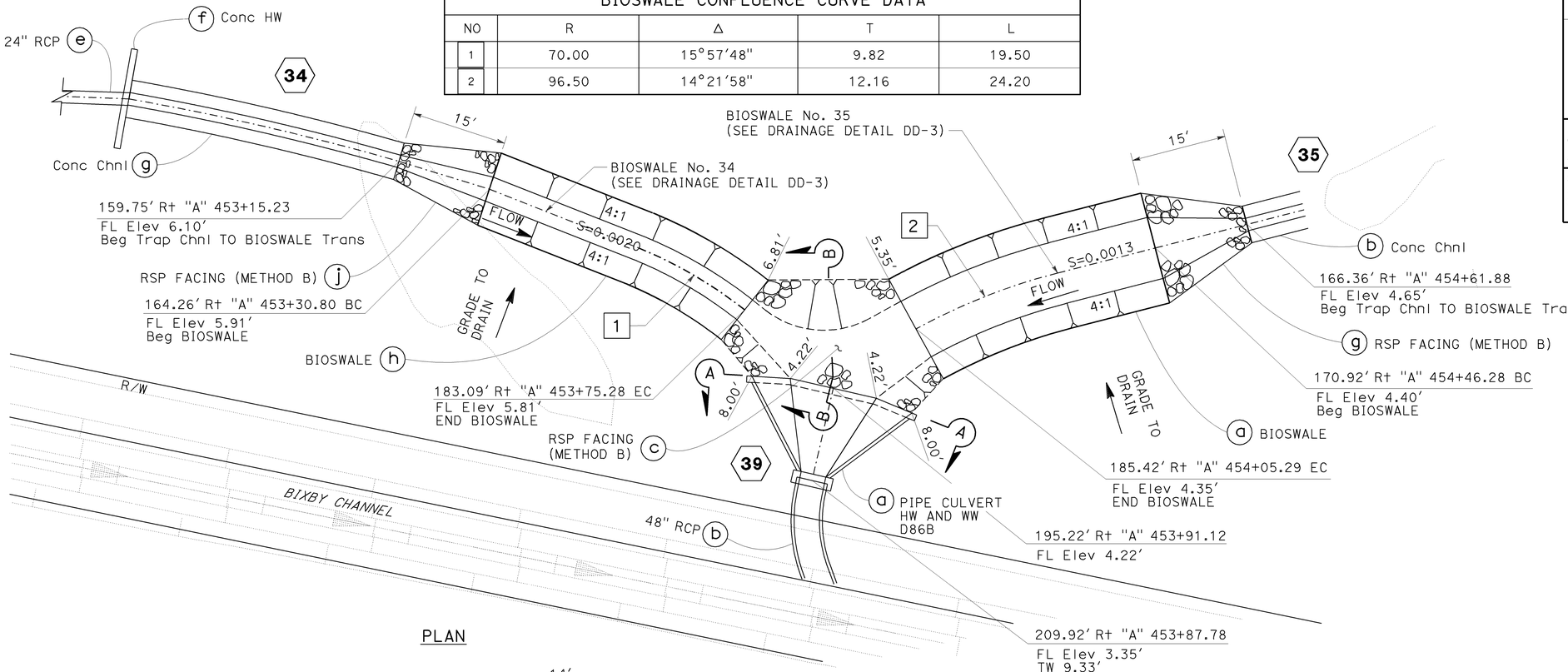

PLAN

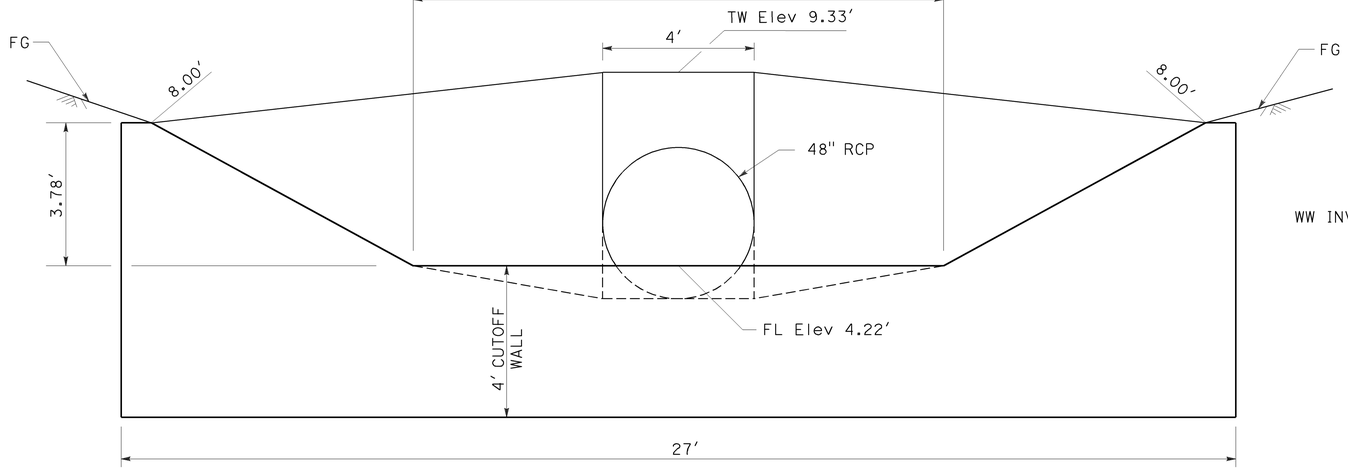

SECTION A-A
NO SCALE

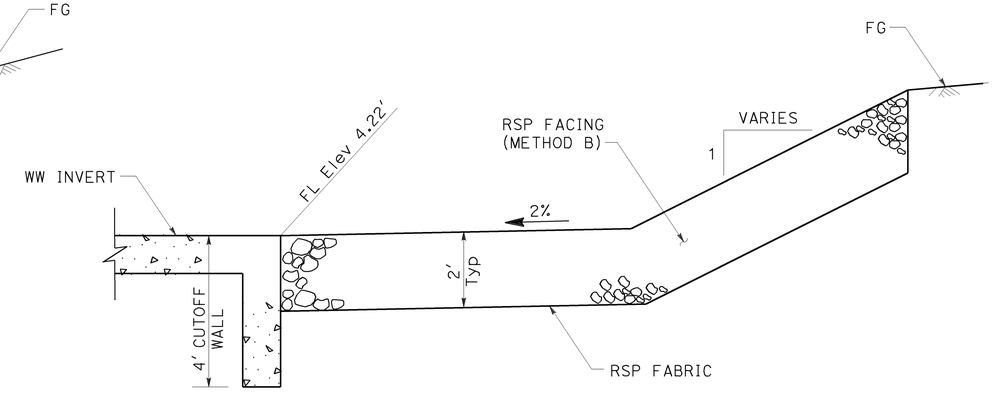

SECTION B-B
NO SCALE

BIOSWALE CONFLUENCE
DETAIL 11

34 35 39

THIS PLAN ACCURATE FOR DRAINAGE WORK ONLY

DETAIL 11
DRAINAGE DETAILS

SCALE: 1" = 10'

DD-26

STATE OF CALIFORNIA - DEPARTMENT OF TRANSPORTATION
Caltrans

CONSULTANT FUNCTIONAL SUPERVISOR: ANDRZEJ NOWAK
CALCULATED-DESIGNED BY: RASHOD GIBSON
CHECKED BY: BROOKE RIVERA
REVISED BY: DUC TRAN
DATE REVISED: 8/10/09

LAST REVISION 08-10-09
DATE PLOTTED => 03-FEB-2010
TIME PLOTTED => 09:05

Dist	COUNTY	ROUTE	POST MILES TOTAL PROJECT	SHEET No.	TOTAL SHEETS
12	Ora	22,405, 605	R0.3/R0.9, 22.3/24.0,3.0/R1.6	425	1929

REGISTERED CIVIL ENGINEER — DATE 8/10/09

REGISTERED PROFESSIONAL ENGINEER — JENNIFER BROOKE RIVERA — No. C70332 — Exp. 09/30/10 — CIVIL — STATE OF CALIFORNIA

2-1-10
PLANS APPROVAL DATE

THE STATE OF CALIFORNIA OR ITS OFFICERS OR AGENTS SHALL NOT BE RESPONSIBLE FOR THE ACCURACY OR COMPLETENESS OF ELECTRONIC COPIES OF THIS PLAN SHEET.

AECOM
999 TOWN & COUNTRY RD
ORANGE, CA 92868

ORANGE COUNTY
TRANSPORTATION AUTHORITY
550 S. MAIN STREET
ORANGE, CA 92863-1584

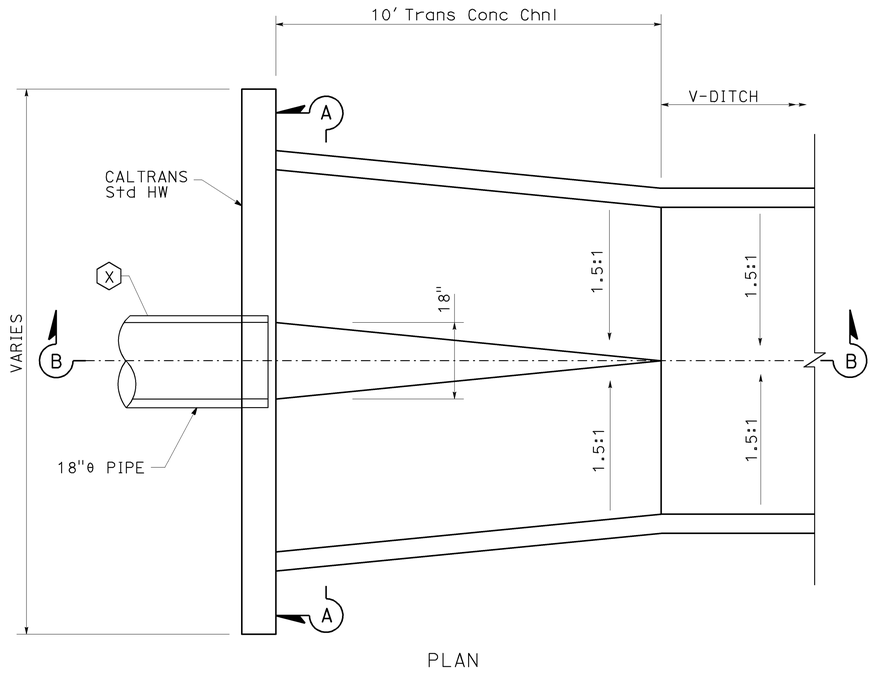

PLAN

NOTES:

1. VALUES FOR A, B AND C AND ELEVATIONS R AND S SHALL BE SHOWN ON THE PLANS.
2. STATIONS SPECIFIED ON THE PLANS APPLY AT INSIDE WALL OF STRUCTURE.
3. REINFORCING STEEL SHALL CONFORM TO ASTM A 615M, GRADE 300, (ASTM A 615, GRADE 40), AND SHALL TERMINATE 1 1/2" CLEAR OF CONCRETE SURFACE UNLESS OTHERWISE SHOWN.
   a. W BARS ARE OF SIZE AND SPACING SPECIFIED FOR WALL STEEL ON PLANS, AND SHALL BE CUT IN CENTER OF OPENING AND BENT INTO TOP AND BOTTOM OF JUNCTION STRUCTURE.
   b. OMIT H BARS WHEN SOFFIT OF SPUR IS 12" OR LESS BELOW SOFFIT OF MAIN LINE, AND OMIT G BARS WHEN INVERT OF SPUR IS 12" OR LESS ABOVE FLOOR OR MAIN LINE.
4. JUNCTION STRUCTURE SHALL BE POURED MONOLITHICALLY WITH MAIN LINE.
5. FLOOR OF STRUCTURE SHALL BE STEEL - TROWELED TO THE SPRING LINE.
6. WHEN CONNECTING TO EXISTING RCB, BREAKOUT LIMITS SHALL EXTEND 6" BEYOND ANY NEW REINFORCEMENT.
7. EMBEDMENT, P, SHALL BE 5".

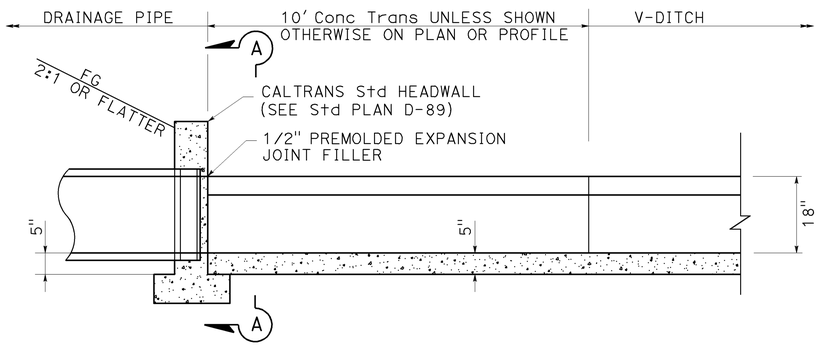

SECTION B-B

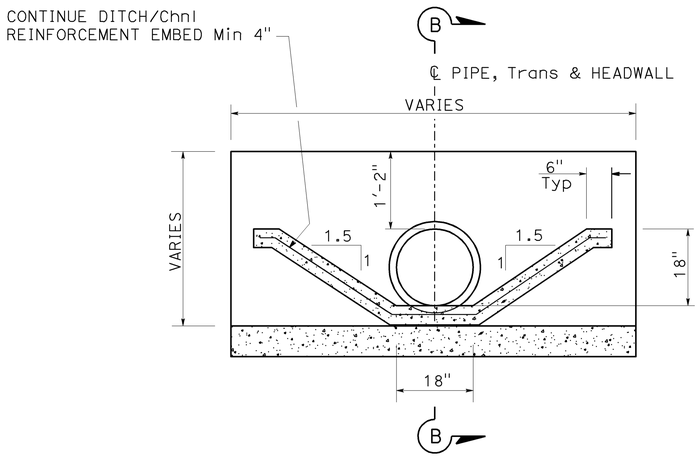

SECTION A-A

PIPE TO V-DITCH TRANSITION

DETAIL 12

THIS PLAN ACCURATE FOR DRAINAGE WORK ONLY

4A 46 47A 51 52A
53 54 55 57A 73A 91

DETAIL 12
DRAINAGE DETAILS

NO SCALE

DD-27

STATE OF CALIFORNIA - DEPARTMENT OF TRANSPORTATION — Caltrans

CONSULTANT FUNCTIONAL SUPERVISOR: ANDRZEJ NOWAK

CALCULATED-DESIGNED BY: RASHOD GIBSON
CHECKED BY: BROOKE RIVERA

REVISED BY: DUC TRAN — DATE REVISED: 8/10/09

LAST REVISION — DATE PLOTTED => 03-FEB-2010 — TIME PLOTTED => 09:05 — 08-10-09

BORDER LAST REVISED 8/1/2008

RELATIVE BORDER SCALE IS IN INCHES 0 1 2 3

USERNAME => trmikesl
DGN FILE => c07163ic027.dgn

CU 12235

EA 071631

Dist	COUNTY	ROUTE	POST MILES TOTAL PROJECT	SHEET No.	TOTAL SHEETS
12	Ora	22,405, 605	R0.3/R0.9, 22.3/24.0,3.0/R1.6	426	1929

REGISTERED CIVIL ENGINEER — 8/10/09 DATE

REGISTERED PROFESSIONAL ENGINEER — JENNIFER BROOKE RIVERA — No. C70332 — Exp. 09/30/10 — CIVIL — STATE OF CALIFORNIA

2-1-10
PLANS APPROVAL DATE

THE STATE OF CALIFORNIA OR ITS OFFICERS OR AGENTS SHALL NOT BE RESPONSIBLE FOR THE ACCURACY OR COMPLETENESS OF ELECTRONIC COPIES OF THIS PLAN SHEET.

AECOM
999 TOWN & COUNTRY RD
ORANGE, CA 92868

ORANGE COUNTY
TRANSPORTATION AUTHORITY
550 S. MAIN STREET
ORANGE, CA 92863-1584

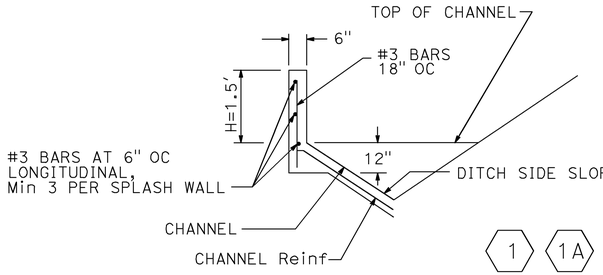

1 1A 6 29 32 46 47 47A 86 55

REINFORCED CONCRETE SPLASH WALL
DETAIL 16

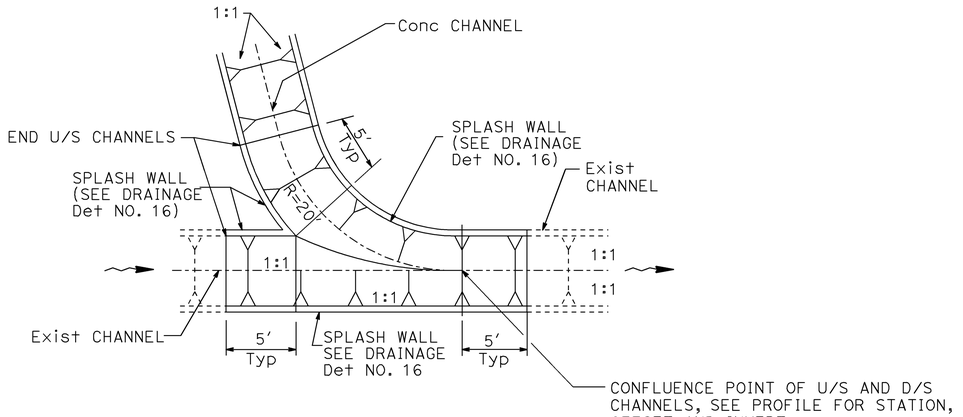

TYPICAL CHANNEL JUNCTION DETAIL
DETAIL 14

55

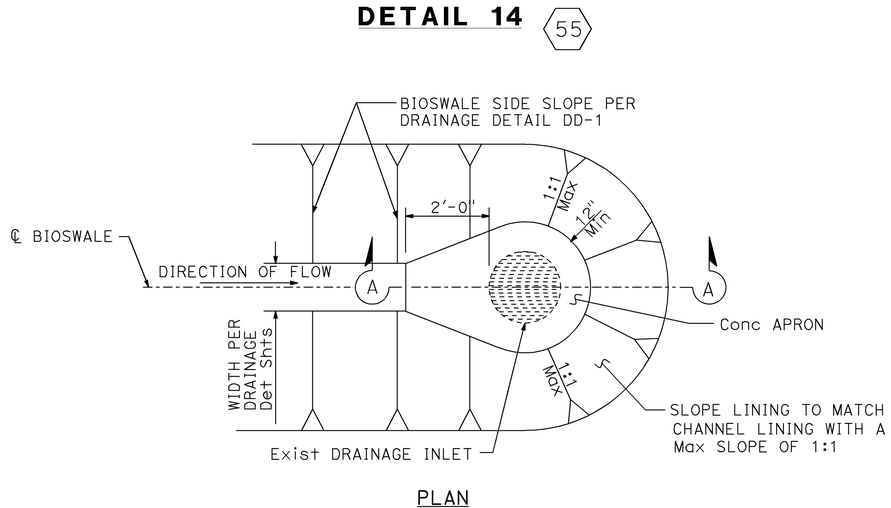

PLAN

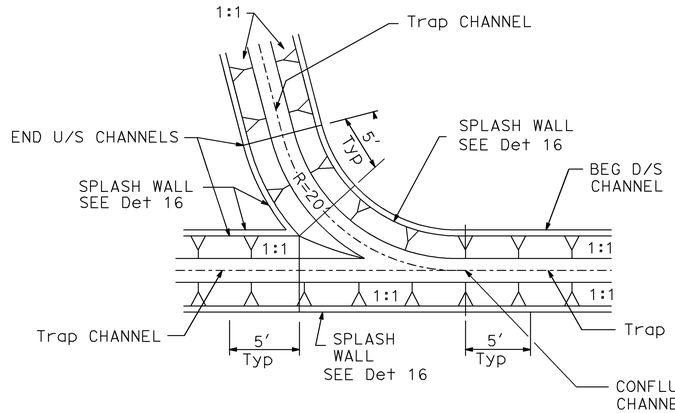

TYPICAL TRAPEZOIDAL CHANNEL JUNCTION DETAIL
DETAIL 15

6 29 32 46 47 47A 86

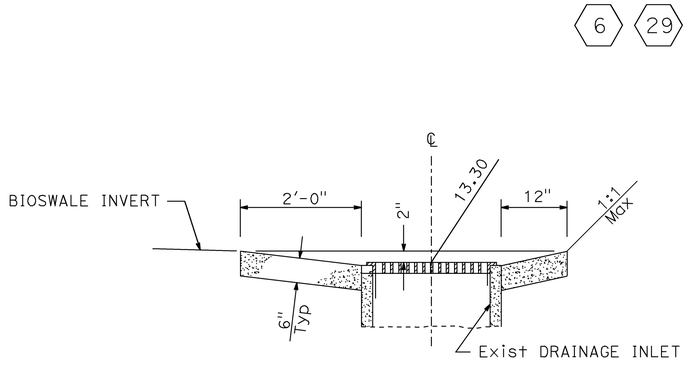

SECTION A-A

BIOSWALE TERMINATION
AT DRAINAGE INLET
DETAIL 13

7

THIS PLAN ACCURATE FOR DRAINAGE WORK ONLY

DETAIL 13, DETAIL 14
DETAIL 15, DETAIL 16
DRAINAGE DETAILS

NO SCALE

DD-28

REVISED BY	DATE REVISED
DUC TRAN	8/10/09

CALCULATED-DESIGNED BY: RASHOD GIBSON
CHECKED BY: BROOKE RIVERA
CONSULTANT FUNCTIONAL SUPERVISOR: ANDRZEJ NOWAK
STATE OF CALIFORNIA - DEPARTMENT OF TRANSPORTATION
Caltrans

LAST REVISION: 08-10-09
DATE PLOTTED => 03-FEB-2010
TIME PLOTTED => 09:05

BORDER LAST REVISED 8/1/2008
RELATIVE BORDER SCALE IS IN INCHES 0 1 2 3
USERNAME => trmikesl
DGN FILE => c07163ic028.dgn
CU 12235
EA 071631

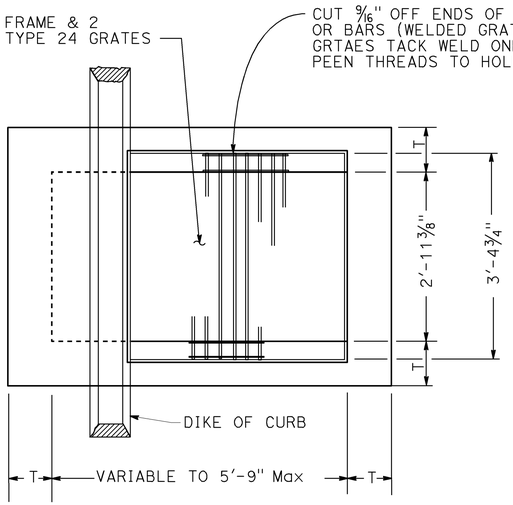

PLAN

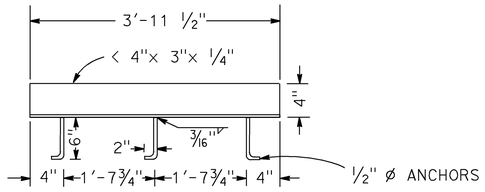

ANCHOR PLACEMENT DETAIL

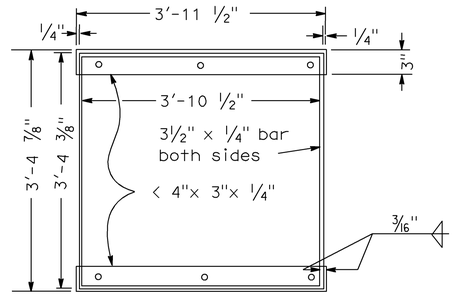

GRATE FRAME DETAIL

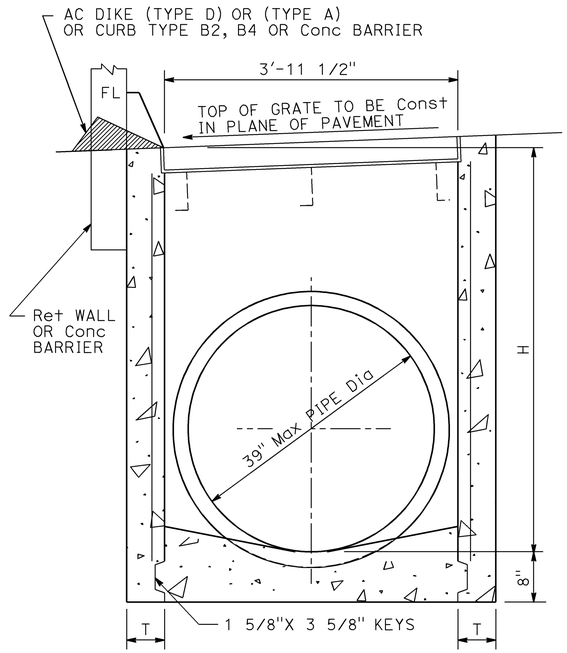

SECTION A-A
(FOR PIPE DIAMETERS LESS THAN 39")

GD-1

2B 3 5

DETAIL 18

GENERAL NOTES:

1. "H" IS THE DIFFERENCE IN ELEVATION BETWEEN THE OUTLET PIPE FLOW AND THE FLOW LINE OF THE GRATES.
2. STEPS-NONE REQUIRED WHEN "H" IS 3'-6" OR LESS. INSTALL ONE STEP 16" + ABOVE FLOOR WHEN "H" IS MORE THAN 3'-6" AND LESS THAN 5'-0". WHERE "H" IS MORE THAN 5'-0" STEPS SHALL BE EVENLY PLACED @ 12" + INTERVALS FROM16" + ABOVE FLOOR TO WITHIN 12" + OF THE TOP OF THE BOX. PLACE STEPS IN WALL WITHOUT PIPE OPENINGS. SEE STANDARD PLAN D-74 FOR STEP DETAIL.
3. PIPE(S) CAN BE PLACED IN ANY WALL.
4. REINFORCING STEEL NOT REQUIRED IN WALLS WHEN H=6' OR LESS.
5. REINFORCING STEEL IN WALLS SHALL BE #4 BARS @ 18" + CENTERS PLACED 1 1/2" CLEAR TO INSIDE OF BOX.
6. WHEN CONCRETE CURB IS USED THE CURB SHALL BE MONOLITHICALLY CONSTRUCTED WITH THE INLET.

MISCELLANEOUS IRON & STEEL

INLET TYPE	GRATE TYPE	WEIGHT
GD-1	24-12	580

H	T
8'-0" or less	6"
8'-1" to 20'-0"	8"

DETAIL 18
DRAINAGE DETAILS
NO SCALE

DD-29

THIS PLAN ACCURATE FOR DRAINAGE WORK ONLY

Dist	COUNTY	ROUTE	POST MILES TOTAL PROJECT	SHEET No.	TOTAL SHEETS
12	Ora	22,405, 605	R0.3/R0.9, 22.3/24.0,3.0/R1.6	427	1929

REGISTERED CIVIL ENGINEER DATE

2-1-10
PLANS APPROVAL DATE

REGISTERED PROFESSIONAL ENGINEER
JENNIFER BROOKE RIVERA
No. C70332
Exp. 09/30/10
CIVIL
STATE OF CALIFORNIA

THE STATE OF CALIFORNIA OR ITS OFFICERS OR AGENTS SHALL NOT BE RESPONSIBLE FOR THE ACCURACY OR COMPLETENESS OF ELECTRONIC COPIES OF THIS PLAN SHEET.

AECOM
999 TOWN & COUNTRY RD
ORANGE, CA 92868

ORANGE COUNTY
TRANSPORTATION AUTHORITY
550 S. MAIN STREET
ORANGE, CA 92863-1584

REVISED BY	DATE REVISED
DUC TRAN	8/10/09

CALCULATED-DESIGNED BY: RASHOD GIBSON
CHECKED BY: BROOKE RIVERA
CONSULTANT FUNCTIONAL SUPERVISOR: ANDRZEJ NOWAK
STATE OF CALIFORNIA - DEPARTMENT OF TRANSPORTATION
Caltrans

LAST REVISION DATE PLOTTED => 03-FEB-2010
TIME PLOTTED => 09:05
08-10-09

BORDER LAST REVISED 8/1/2008
RELATIVE BORDER SCALE IS IN INCHES 0 1 2 3
USERNAME => trmikesl
DGN FILE => c071631c029.dgn
CU 12235
EA 071631

Dist	COUNTY	ROUTE	POST MILES TOTAL PROJECT	SHEET No.	TOTAL SHEETS
12	Ora	22,405, 605	R0.3/R0.9, 22.3/24.0,3.0/R1.6	428	1929

REGISTERED CIVIL ENGINEER — DATE 8/10/09

JENNIFER BROOKE RIVERA No. C70332 Exp. 09/30/10 CIVIL — REGISTERED PROFESSIONAL ENGINEER — STATE OF CALIFORNIA

2-1-10
PLANS APPROVAL DATE

THE STATE OF CALIFORNIA OR ITS OFFICERS OR AGENTS SHALL NOT BE RESPONSIBLE FOR THE ACCURACY OR COMPLETENESS OF ELECTRONIC COPIES OF THIS PLAN SHEET.

AECOM
999 TOWN & COUNTRY RD
ORANGE, CA 92868

ORANGE COUNTY TRANSPORTATION AUTHORITY
550 S. MAIN STREET
ORANGE, CA 92863-1584

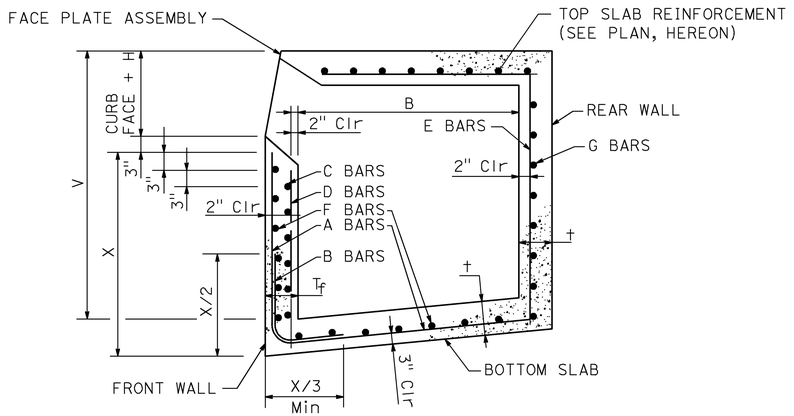

TYPICAL REINFORCEMENT DETAILS

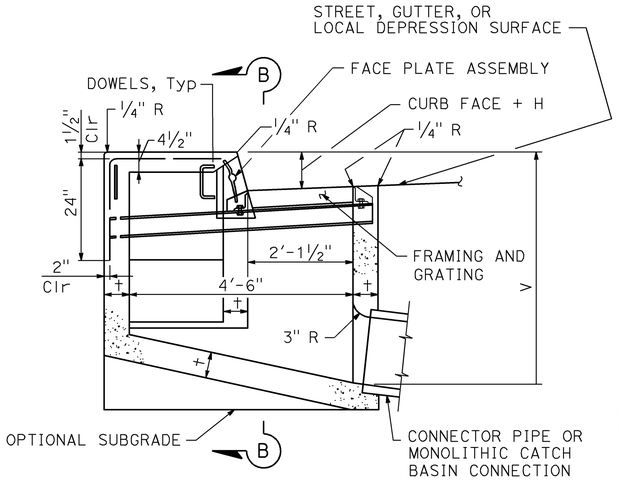

SECTION A-A

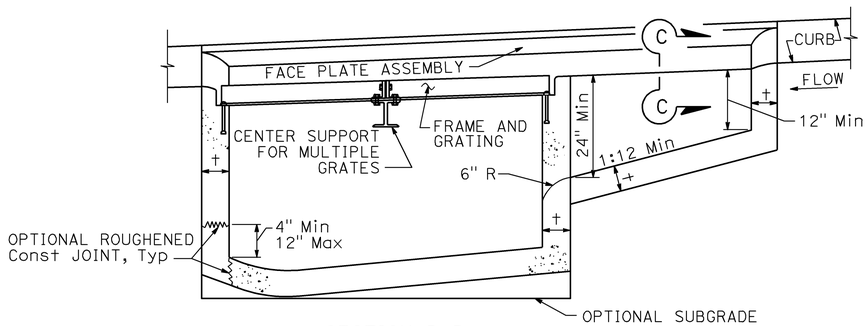

SECTION B-B

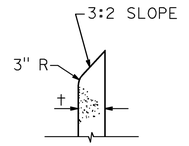

SECTION C-C

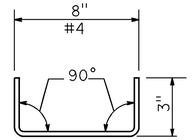

DOWEL DETAIL

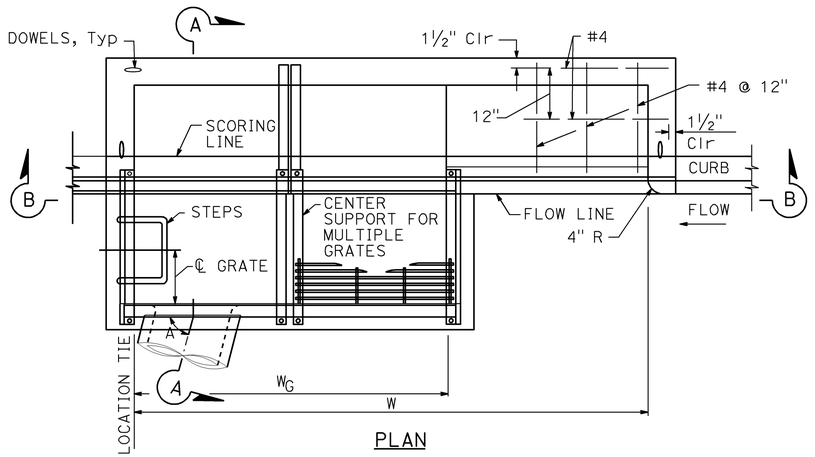

PLAN

COMBINATION CATCH BASIN
DETAIL 19

7 87 88 90

THIS PLAN ACCURATE FOR DRAINAGE WORK ONLY

DETAIL 19
DRAINAGE DETAILS
NO SCALE

DD-30

STATE OF CALIFORNIA - DEPARTMENT OF TRANSPORTATION
Caltrans
CONSULTANT FUNCTIONAL SUPERVISOR: ANDRZEJ NOWAK
CALCULATED-DESIGNED BY: RASHOD GIBSON
CHECKED BY: BROOKE RIVERA
REVISED BY: DUC TRAN
DATE REVISED: 8/10/09

LAST REVISION DATE PLOTTED => 03-FEB-2010
TIME PLOTTED => 09:05
08-10-09

BORDER LAST REVISED 8/1/2008 | RELATIVE BORDER SCALE IS IN INCHES 0 1 2 3 | USERNAME => trmikesl | DGN FILE => c07163ic030.dgn | CU 12235 | EA 071631

Dist	COUNTY	ROUTE	POST MILES TOTAL PROJECT	SHEET No.	TOTAL SHEETS
12	Ora	22,405, 605	R0.3/R0.9, 22.3/24.0,3.0/R1.6	429	1929

8/10/09
REGISTERED CIVIL ENGINEER DATE

REGISTERED PROFESSIONAL ENGINEER
JENNIFER BROOKE RIVERA
No. C70332
Exp.09/30/10
CIVIL
STATE OF CALIFORNIA

2-1-10
PLANS APPROVAL DATE

THE STATE OF CALIFORNIA OR ITS OFFICERS OR AGENTS SHALL NOT BE RESPONSIBLE FOR THE ACCURACY OR COMPLETENESS OF ELECTRONIC COPIES OF THIS PLAN SHEET.

AECOM
999 TOWN & COUNTRY RD
ORANGE, CA 92868

ORANGE COUNTY
TRANSPORTATION AUTHORITY
550 S. MAIN STREET
ORANGE, CA 92863-1584

CURB OPENING CATCH BASIN REINFORCEMENT									
Max W	Max V	†	†f	A & B BARS	C BARS	D BARS	E BARS	F BARS	G BARS
3.5′	8′	6"	6"						
3.5′	12′	8"	8"						
7′	6′	6"	6"						
7′	12′	8"	8"						
14′	4′	6"	6"		#4 @ 12"	#4 @ 18"			
14′	8′	6"	8"		#4 @ 12"	#4 @ 18"			
14′	12′	8"	10"		#4 @ 6"	#4 @ 18"			
28′	4′	6"	6"	#4 @ 24"				#4 @ 18"	
28′	5′	6"	8"	#4 @ 24"				#4 @ 18"	
28′	6′	6"	8"	#4 @ 18"				#4 @ 18"	
28′	7′	8"	8"	#4 @ 17"				#4 @ 18"	
28′	8′	8"	8"	#4 @ 13"				#4 @ 18"	
28′	9′	8"	10"	#4 @ 15"				#4 @ 18"	
28′	10′	8"	10"	#4 @ 12"				#4 @ 18"	
28′	11′	8"	10"	#5 @ 15"			#4 @ 10"	#4 @ 18"	#4 @ 18"
28′	12′	8"	10"	#6 @ 18"			#4 @ 9"	#4 @ 18"	#4 @ 18"

STRUCTURAL DATA							
WALL AND SLAB DIMESIONS AND REINFORCEMENT REQUIREMENTS							
MAXIMUM			†	WALL			FLOOR
W	GRATES	V		FRONT	REAR	END	
7′	1	4′	6"				
7′	1	8′	8"				
7′	1	10′	10"				
14′	3	4′	6"				
14′	2	8′	8"				
14′	2	10′	10"				
14′	2	12′	10"				
28′	6	4′	6"				
28′	6	6′	8"				
28′	7	4′	6"				
28′	7	8′	8"				
28′	7	10′	10"				
28′	7	12′	10"				

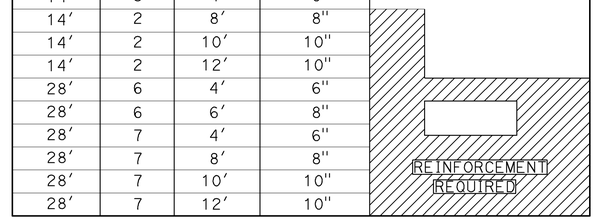

NOTES:

1. WHERE THE BASIN IS TO BE CONSTRUCTED WITHIN THE LIMITS OF EXISTING OR PROPOSED SIDEWALK OR IS CONTIGUOUS TO SUCH SIDEWALK, THE TOP SLAB OF THE BASIN MAY BE POURED EITHER MONOLITHIC WITH THE SIDEWALK OR SEPARATELY, USING THE SAME CLASS OF CONCRETE AS IN THE BASIN. WHEN POURED MONOLITHICALLY, THE SIDEWALK SHALL BE PROVIDED WITH A WEAKENED PLANE OR A 1" DEEP SAWCUT CONTINUOUSLY AROUND THE EXTERNAL PERIMETER OF THE CATCH BASIN WALLS, INCLUDING ACROSS THE FULL WIDTH OF THE SIDEWALK. SURFACE OF ALL EXPOSED CONCRETE SHALL CONFORM IN SLOPE, GRADE, COLOR, FINISH, AND SCORING TO EXISTING OR PROPOSED CURB AND WALK ADJACENT TO THE BASIN.

2. ALL CURVED CONCRETE SURFACES SHALL BE FORMED BY CURVED FORMS, AND SHALL NOT BE SHAPED BY PLASTERING.

3. FLOOR OF BASIN SHALL BE GIVEN A STEEL TROWEL FINISH. FLOOR OF GRATING PORTION SHALL HAVE A LONGITUDINAL AND LATERAL SLOPE OF 1:12 MINIMUM AND 1:3 MAXIMUM, EXCEPT WHERE THE GUTTER GRADE EXCEED 8% IN WHICH CASE THE LONGITUDINAL SLOPE OF THE FLOOR SHALL BE THE SAME AS THE GUTTER GRADE, SLOPE FLOOR FROM ALL DIRECTIONS TO THE OUTLET.

4. DIMENSIONS:

   V= THE DIFFERENCE IN ELEVATION BETWEEN THE TOP OF THE CURB AND THE INVERT OF THE CATCH BASIN AT THE OUTLET = 4.5′

   V_I= THE DIFFERENCE IN ELEVATION BETWEEN THE TOP OF THE CURB AND THE INVERT OF THE INLET, NOTED ON THE PLANS.

   H= NOTED ON THE PLANS.

   W= 7′ UNLESS OTHERWISE NOTED ON THE PLANS.

   W_G= 2′-11 3/8" FOR ONE GRATING; ADD 3′-5 3/8" FOR EACH ADDITIONAL GRATING. ONE GRATING IS REQUIRED UNLESS OTHERWISE SHOWN ON THE PLANS.

   A= THE ANGLE, IN DEGREES, INTERCEPTED BY THE CENTERLINE OF THE CONNECTOR PIPE AND THE CATCH BASIN WALL TO WHICH THE CONNECTOR PIPE IS ATTACHED.

5. PLACE CONNECTOR PIPES AS INDICATED ON THE PLANS. UNLESS OTHERWISE SPECIFIED, THE CONNECTOR PIPE SHALL BE LOCATED AT THE DOWNSTREAM END OF THE BASIN. WHERE THE CONNECTOR PIPE IS SHOWN AT A CORNER, THE CENTERLINE OF THE PIPE SHALL INTERSECT THE INSIDE CORNER OF THE BASIN. THE PIPE MAY BE CUT AND TRIMMED AT A SKEW NECESSARY TO INSURE MINIMUM 3" PIPE EMBEDMENT, ALL AROUND, WITHIN THE CATCH BASIN WALL, AND 3" RADIUS OF ROUNDING OF STRUCTURE CONCRETE, ALL AROUND, ADJACENT TO PIPE ENDS. A MONOLITHIC CATCH BASIN CONNECTION SHALL BE USED TO JOIN THE CONNECTOR PIPE TO THE CATCH BASIN WHENEVER ANGLE "A" IS LESS THAN 70° OR GREATER THAN 110°, OR WHENEVER THE CONNECTOR PIPE IS LOCATED IN A CORNER. THE OPTIONAL USE OF A MONOLITHIC CATHC BASIN CONNECTION IN ANY CASE IS PERMITTED. MONOLITHIC CATCH BASIN CONNECTIONS MAY BE CONSTRUCTED TO AVOID CUTTING STANDARD LENGTHS OF PIPE.

6. STEPS SHALL BE LOCATED AS SHOWN. IF THE CONNECTOR PIPE INTERFERES WITH THE STEPS, THEY SHALL BE LOCATED ON THE FRONT WALL AT THE CENTERLINE OF THE DOWNSTREAM GRATING. STEPS SHALL BE SPACED 12" APART. THE TOP STEP SHALL BE 7" BELOW THE TOP OF THE GRATING AND PROJECT 2½". ALL OTHER STEPS SHALL PROJECT 5".

7. DOWELS ARE REQUIRED AT EACH CORNER AND AT 7′ ON CENTER (MAXIMUM) ALONG THE BACKWALL.

8. THE FOLLOWING DETAILS ARE INCORPORATED HEREIN:

   MONOLITHIC CATCH BASIN CONNECTION (SEE DRAINAGE DETAILS DD-33
   CATCH BASIN FACE PLATE ASSEMBLY AND PROTECTION BAR
   FRAME AND GRATING FOR CATCH BASINS (SEE DRAINAGE Sht DETAILS DD-33

7 87 88 90

DETAIL 19 (Cont)

THIS PLAN ACCURATE FOR DRAINAGE WORK ONLY

DETAIL 19 Cont
DRAINAGE DETAILS
NO SCALE

DD-31

STATE OF CALIFORNIA - DEPARTMENT OF TRANSPORTATION
Caltrans
CONSULTANT FUNCTIONAL SUPERVISOR: ANDRZEJ NOWAK
CALCULATED-DESIGNED BY: RASHOD GIBSON
CHECKED BY: BROOKE RIVERA
REVISED BY: DUC TRAN
DATE REVISED: 8/10/09

LAST REVISION DATE PLOTTED => 03-FEB-2010
08-10-09 TIME PLOTTED => 09:05

BORDER LAST REVISED 8/1/2008
RELATIVE BORDER SCALE IS IN INCHES 0 1 2 3
USERNAME => trmikesl
DGN FILE => c07163ic031.dgn
CU 12235
EA 071631

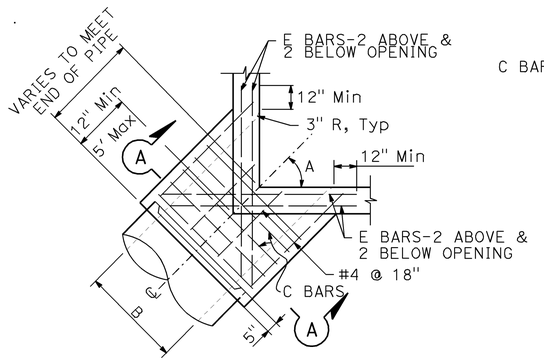

PLAN - CORNER CONECTION

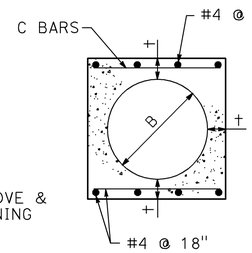

SECTION A-A

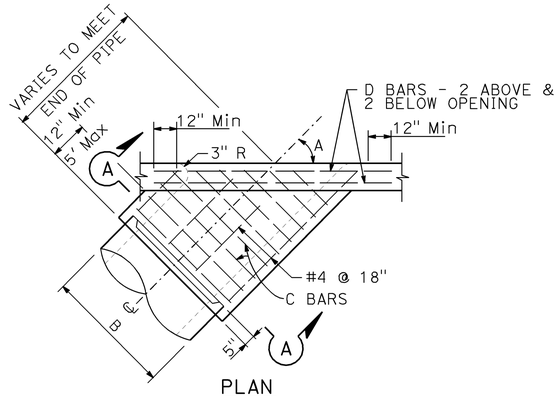

PLAN
SIDE CONNECTION

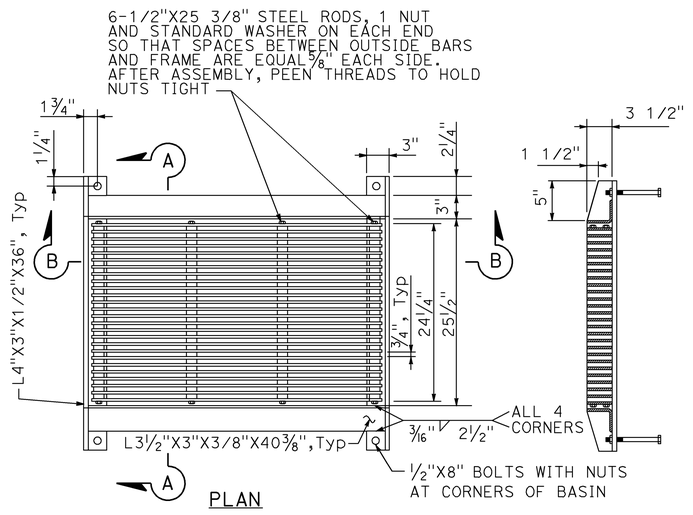

PLAN

SECTION A-A

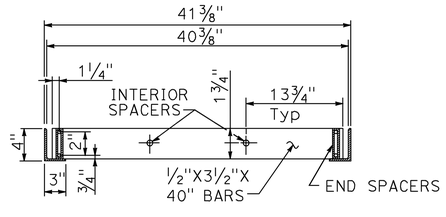

SECTION B-B

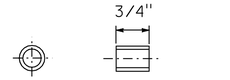

STANDARD 1/2" PIPE INTERIOR SPACERS

MONOLITHIC CATCH BASIN CONNECTION NOTES:

1. REINFORCING STEEL SHALL BE 1-1/2" CLEAR FROM FACE OF CONCRETE UNLESS OTHERWISE SHOWN.
2. REINFORCING STEEL FOR INSIDE FACE OF CATCH BASIN SHALL BE CUT AT CENTER OF OPENING AND BENT INTO WALLS OF MONOLITHIC CATCH BASIN CONNECTION. REINFORCING STEEL FOR OUTSIDE FACE OF CATCH BASIN SHALL BE CUT 2" CLEAR OF OPENING.
3. CONNECTION SHALL BE PLACED MONOLITHIC WITH CATCH BASIN. THE ROUNDED EDGE OF OUTLET SHALL BE CONSTRUCTED BY PLACING CONCRETE WITH THE SAME CLASS OF CONCRETE AS THE CATCH BASIN AGAINST CURVED FORM WITH A RADIUS OF 3".
4. CONNECTION SHALL BE CONSTRUCTED WHEN:

   (A) PIPES INLET OR OUTLET THROUGH CORNER OF CATCH BASIN

   (B) ANGLE A FOR PIPES THROUGH 30" IN DIAMETER IS LESS THAN THAN 70° OR GREATER THAN 110°.

MONOLITHIC CATCH BASIN CONNECTION
SEAL BEACH BLVD COMBINATION CATCH BASINS

STRUCTURAL DATA			
B	†	C BARS	D&E BARS
12"	4"	#4 @ 6"	#5
15"	4 1/4"		
18"	4 1/2"		
21"	5"		
24"	5 1/4"		
27"	5 1/2"		
30"	6"		
33"	6 1/4"		
36"	6 1/2"		
39"	7"		

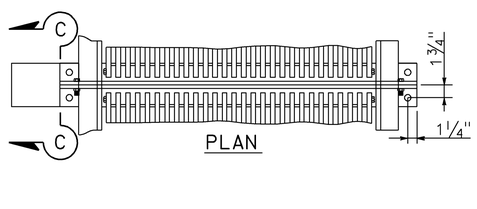

PLAN

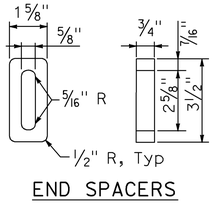

END SPACERS

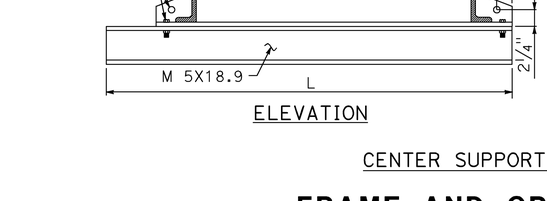

ELEVATION

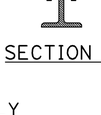

SECTION C-C

CENTER SUPPORT ASSEMBLY

FRAME AND GRATING NOTES:

1. ALL PARTS SHALL BE STEEL, EXCEPT THAT END SPACERS MAY BE CAST IRON.
2. ALL PARTS SHALL BE GALVANIZED AFTER FABRICATION, EXCEPT THAT GRATINGS SHALL BE ASSEMBLED AFTER COMPONENT PARTS ARE GALVANIZED.
3. ALL DIMENSIONS ARE FINISHED DIMENSIONS AND INCLUDE GALVANIZING.
4. ALL BOLT HOLES SHALL BE 5/8" DIAMETER.
5. ALL THREADS SHALL BE NATIONAL COARSE SERIES (NC).
6. CENTER SUPPORT ASSEMBLY REQUIRED WHEN TWO OR MORE GRATINGS ARE SPECIFIED ON PLANS. L = 64".

FRAME AND GRATING FOR COMBINATION CATCH BASINS

DETAIL 19 (Cont)

THIS PLAN ACCURATE FOR DRAINAGE WORK ONLY

Dist	COUNTY	ROUTE	POST MILES TOTAL PROJECT	SHEET No.	TOTAL SHEETS
12	Ora	22,405, 605	R0.3/R0.9, 22.3/24.0,3.0/R1.6	430	1929

REGISTERED CIVIL ENGINEER — 8/10/09 DATE

JENNIFER BROOKE RIVERA No. C70332 Exp.09/30/10 CIVIL — REGISTERED PROFESSIONAL ENGINEER — STATE OF CALIFORNIA

2-1-10
PLANS APPROVAL DATE

THE STATE OF CALIFORNIA OR ITS OFFICERS OR AGENTS SHALL NOT BE RESPONSIBLE FOR THE ACCURACY OR COMPLETENESS OF ELECTRONIC COPIES OF THIS PLAN SHEET.

AECOM
999 TOWN & COUNTRY RD
ORANGE, CA 92868

ORANGE COUNTY TRANSPORTATION AUTHORITY
550 S. MAIN STREET
ORANGE, CA 92863-1584

7 87 88 90

DETAIL 19 Cont
DRAINAGE DETAILS

NO SCALE

DD-32

REVISED BY	DATE REVISED
DUC TRAN	8/10/09

CALCULATED-DESIGNED BY: RASHOD GIBSON
CHECKED BY: BROOKE RIVERA
CONSULTANT FUNCTIONAL SUPERVISOR: ANDRZEJ NOWAK
STATE OF CALIFORNIA - DEPARTMENT OF TRANSPORTATION

LAST REVISION DATE PLOTTED => 03-FEB-2010
TIME PLOTTED => 09:05
08-10-09

BORDER LAST REVISED 8/1/2008 | RELATIVE BORDER SCALE IS IN INCHES 0 1 2 3 | USERNAME => trmikesl DGN FILE => c071631c032.dgn | CU 12235 | EA 071631

Dist	COUNTY	ROUTE	POST MILES TOTAL PROJECT	SHEET No.	TOTAL SHEETS
12	Ora	22,405, 605	R0.3/R0.9, 22.3/24.0,3.0/R1.6	431	1929

REGISTERED CIVIL ENGINEER — DATE 8/10/09

JENNIFER BROOKE RIVERA No. C70332 Exp. 09/30/10 CIVIL — REGISTERED PROFESSIONAL ENGINEER — STATE OF CALIFORNIA

2-1-10
PLANS APPROVAL DATE

THE STATE OF CALIFORNIA OR ITS OFFICERS OR AGENTS SHALL NOT BE RESPONSIBLE FOR THE ACCURACY OR COMPLETENESS OF ELECTRONIC COPIES OF THIS PLAN SHEET.

AECOM
999 TOWN & COUNTRY RD
ORANGE, CA 92868

ORANGE COUNTY
TRANSPORTATION AUTHORITY
550 S. MAIN STREET
ORANGE, CA 92863-1584

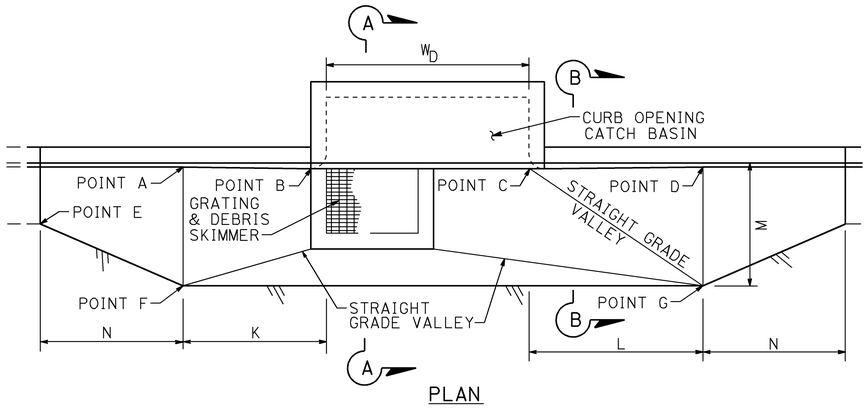

PLAN

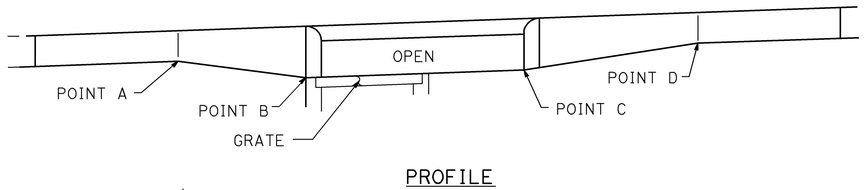

PROFILE

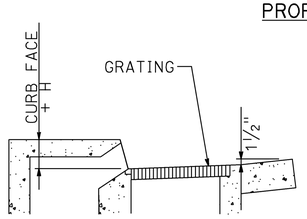

SECTION A-A

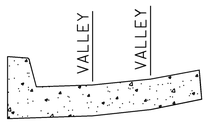

SECTION B-B

LOCAL DEPRESSIONS AT COMBINATION CATCH BASINS

NOTES:

1. ALL EXPOSED EDGES SHALL BE ROUNDED TO A 1/2" RADIUS.
2. THE CURB FACE AT POINTS A AND D SHALL BE THE NORMAL CURB FACE OF THE ADJACENT CURB. AT POINTS B AND C, THE CURB SHALL BE THE NORMAL CURB FACE OF THE ADJACENT CURB PLUS H (VERTICAL DIMENSION OF LOCAL DEPRESSION).
3. IN EXISTING STREETS WHERE NO PAVEMENT RECONSTRUCTION IS SPECIFIED ON THE PLANS, THE ELEVATION OF THE OUTER EDGE OF THE LOCAL DEPRESSION SHALL MEET THE FINISHED STREET SURFACE.
4. IN NEW STREETS OR IN EXISTING STREETS WHERE PAVEMENT RECONSTRUCTION IS SPECIFIED ON THE PLANS:

   THE ELEVATIONS OF POINTS F AND G SHALL BE SET H1 HIGHER THAN THE GUTTER FLOW LINE ELEVATIONS AT POINTS A AND D, RESPECTIVELY.

   WHERE THERE IS NO GUTTER ADJACENT TO THE LOCAL DEPRESSION, THE ELEVATION OF POINT E SHALL BE SET H3 HIGHER THAN THE ELEVATION AT THE NEAREST TOE OF CURB.
5. DIMENSIONS:

   H, H1, H2, H3 SHALL BE AS NOTED ON THE PLANS.

   G = 24"

   K = 5'-0"

   L = 6'-0"

   M = 4'-0"

   N = 5'-0"

   W_D = CATCH BASIN W FOR SINGLE CATCH BASIN OR DISTANCE BETWEEN EXTREME END WALLS FOR MULTIPLE CATCH BASINS.

DETAIL 19 (Cont)

THIS PLAN ACCURATE FOR DRAINAGE WORK ONLY

7 87 88 90

DETAIL 19 Cont
DRAINAGE DETAILS

NO SCALE

DD-33

REVISED BY	DUC TRAN
DATE REVISED	8/10/09
CALCULATED-DESIGNED BY	RASHOD GIBSON
CHECKED BY	BROOKE RIVERA
CONSULTANT FUNCTIONAL SUPERVISOR	ANDRZEJ NOWAK

STATE OF CALIFORNIA - DEPARTMENT OF TRANSPORTATION
Caltrans

LAST REVISION DATE PLOTTED => 03-FEB-2010
TIME PLOTTED => 10:32
08-10-09

Dist	COUNTY	ROUTE	POST MILES TOTAL PROJECT	SHEET No.	TOTAL SHEETS
12	Ora	22,405, 605	R0.3/R0.9, 22.3/24.0,3.0/R1.6	432	1929

REGISTERED CIVIL ENGINEER — 8/10/09 DATE

JENNIFER BROOKE RIVERA, No. C70332, Exp. 09/30/10, CIVIL — REGISTERED PROFESSIONAL ENGINEER — STATE OF CALIFORNIA

2-1-10
PLANS APPROVAL DATE

THE STATE OF CALIFORNIA OR ITS OFFICERS OR AGENTS SHALL NOT BE RESPONSIBLE FOR THE ACCURACY OR COMPLETENESS OF ELECTRONIC COPIES OF THIS PLAN SHEET.

AECOM
999 TOWN & COUNTRY RD
ORANGE, CA 92868

ORANGE COUNTY
TRANSPORTATION AUTHORITY
550 S. MAIN STREET
ORANGE, CA 92863-1584

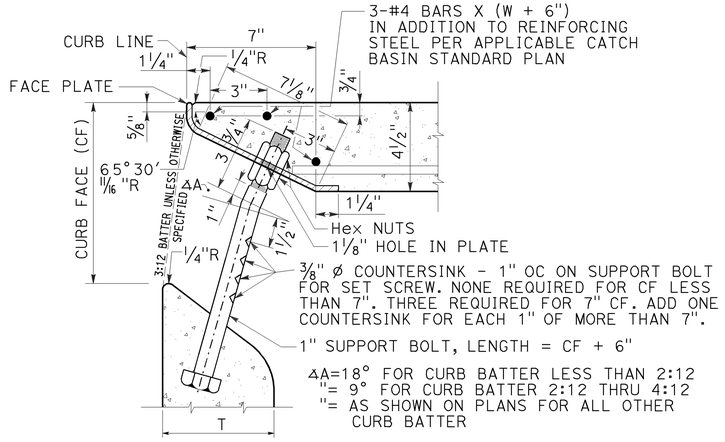

SECTION

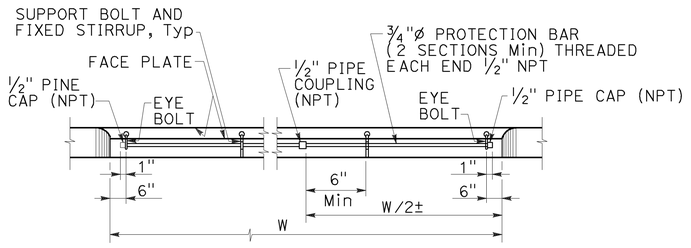

ELEVATION

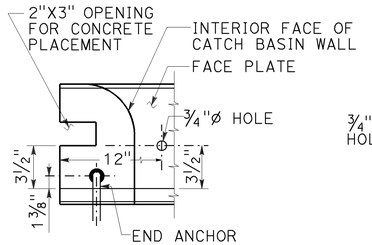

END DETAIL

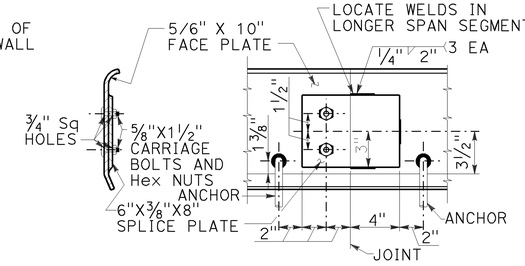

SPLICE DETAIL

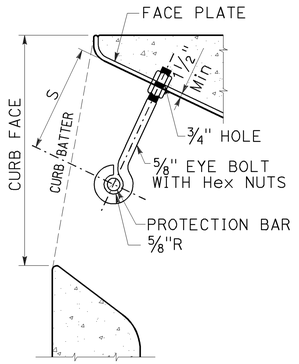

EYE BOLT DETAIL

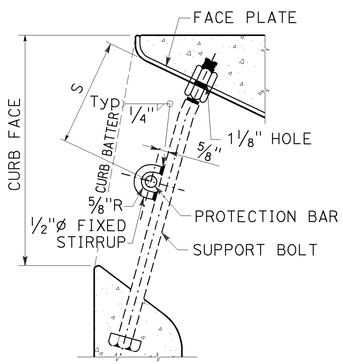

STIRRUP DETAIL

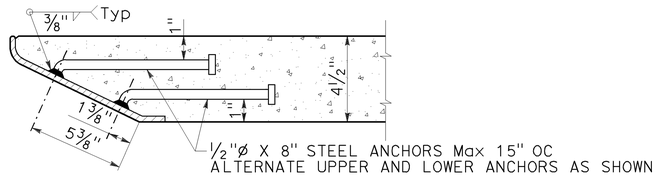

FACE PLATE ANCHOR DETAIL

SUPPORT BOLT AND FACE PLATE 4 1/2" TOP SLAB

PROTECTION BAR AND SUPPORT BOLTS(S) WITH FIXED STIRRUP(S)

NOTES:

GENERAL

1. ALL PARTS SHALL BE STEEL, EXCEPT SET SCREWS, WHICH SHALL BE STAINLESS STEEL OR BRASS.
2. EXCLUDING SET SCREWS, ALL EXPOSED METAL PARTS SHALL BE GALVANIZED AFTER FABRICATION.
3. CURB FACE SHALL BE AS NOTED ON THE PLANS.
4. CURB BATTER SHALL BE 3:12 UNLESS OTHERWISE SPECIFIED.

FACE PLATE

5. FACE PLATE LENGTHS SHALL BE CATCH BASIN W PLUS 12".
6. WHEN THE LENGTH OF THE FACE PLATE IS BETWEEN 22' AND 43', TWO SECTIONS MAY BE USED. WHEN THE LENGTH EXCEEDS 43', THREE SECTIONS MAY BE USED. SECTIONS SHALL BE SPLICED ACCORDING TO THE APPLICABLE SPLICE DETAIL. SPLICE SHALL BE PLACED 1' FROM A SUPPORT BOLT.
7. WHERE CATCH BASINS ARE TO BE CONSTRUCTED ON CURVES, THE MAXIMUM CHORD LENGTH FOR THE FACE PLATE SHALL BE SUCH THAT THE MAXIMUM PERPENDICULAR DISTANCE TO THE TRUE CURVE SHALL NOT EXCEED 1". WHERE MORE THAN ONE CHORD IS REQUIRED, CHORD LENGTHS SHALL BE EQUAL. CHORD SECTIONS SHALL BE SPLICED ACCORDING TO THE APPLICABLE SPLICE DETAIL (MODIFIED TO FIT THE CHORD DEFLECTION) AND A SUPPORT BOLT SHALL BE PLACED 1' FROM THE SPLICE.
8. ROUND HEAD ANCHORS FOR THE FACE PLATE SHALL BE NELSON H-4F SHEAR CONNECTOR, KSN WELDING SYSTEMS DIVISION SHEAR CONNECTOR OR EQUAL.

SUPPORT BOLT

9. SUPPORT BOLTS ARE REQUIRED WHEN THE LENGTH OF THE CATCH BASIN OPENING IS 7' OR GREATER, AND SHALL BE EVENLY SPACED ACROSS THE OPENING. SPACING SHALL NOT BE LESS THAN 3'-6" ON CENTER NOR GREATER THAN 5' ON CENTER.

PROTECTION BAR

10. THE BAR SHALL BE TWO PIECES, TWO EYE BOLTS AND A WELDED STIRRUP ON EACH SUPPORT BOLT ARE REQUIRED.
11. NUMBER OF PROTECTION BARS AND LOCATIONS ARE AS FOLLOWS:

		MAXIMUM CURB FACE, (INCHES)												
		6"	7"	8"	9"	10"	11"	12"	13"	14"	15"	16"	17"	18"
CURB BATTER	0:12	0	0	3.5"	3.5"	4.5"	4.5"	4.5"	5.5"	3.5"	3.5"	4.5"	4.5"	4.5"
	1:12	0	0	3.5"	3.5"	4.5"	4.5"	4.5"	5.5"	3.5"	3.5"	4.5"	4.5"	5.5"
	2:12	0	0	3.5"	3.5"	4.5"	4.5"	5.5"	3.5"	3.5"	4.5"	4.5"	5.5"	5.5"
	3:12	0	0	3.5"	3.5"	4.5"	4.5"	5.5"	3.5"	4.5"	4.5"	5.5"	5.5"	4.5"
	4:12	0	3.5"	3.5"	4.5"	4.5"	5.5"	3.5"	3.5"	4.5"	4.5"	5.5"	4.5"	4.5"
		0	1					2					3	
		NUMBER OF PROTECTION BARS												

FOR OTHER CURB FACE OR BATTER SEE PLANS

DETAIL 19 (Cont)

THIS PLAN ACCURATE FOR DRAINAGE WORK ONLY

DETAIL 19 Cont
DRAINAGE DETAILS

NO SCALE

DD-34

STATE OF CALIFORNIA - DEPARTMENT OF TRANSPORTATION
Caltrans
CONSULTANT FUNCTIONAL SUPERVISOR: ANDRZEJ NOWAK
CALCULATED-DESIGNED BY: RASHOD GIBSON
CHECKED BY: BROOKE RIVERA
REVISED BY: DUC TRAN
DATE REVISED: 8/10/09

LAST REVISION DATE PLOTTED => 03-FEB-2010
08-10-09 TIME PLOTTED => 10:33

BORDER LAST REVISED 8/1/2008
RELATIVE BORDER SCALE IS IN INCHES 0 1 2 3
USERNAME => trcarol
DGN FILE => c071631c034.dgn
CU 12235
EA 071631

Dist	COUNTY	ROUTE	POST MILES TOTAL PROJECT	SHEET No.	TOTAL SHEETS
12	Ora	22,405, 605	R0.3/R0.9, 22.3/24.0,3.0/R1.6	433	1929

REGISTERED CIVIL ENGINEER — 8/10/09 DATE

JENNIFER BROOKE RIVERA No. C70332 Exp.09/30/10 CIVIL — REGISTERED PROFESSIONAL ENGINEER — STATE OF CALIFORNIA

2-1-10
PLANS APPROVAL DATE

THE STATE OF CALIFORNIA OR ITS OFFICERS OR AGENTS SHALL NOT BE RESPONSIBLE FOR THE ACCURACY OR COMPLETENESS OF ELECTRONIC COPIES OF THIS PLAN SHEET.

AECOM
999 TOWN & COUNTRY RD
ORANGE, CA 92868

ORANGE COUNTY TRANSPORTATION AUTHORITY
550 S. MAIN STREET
ORANGE, CA 92863-1584

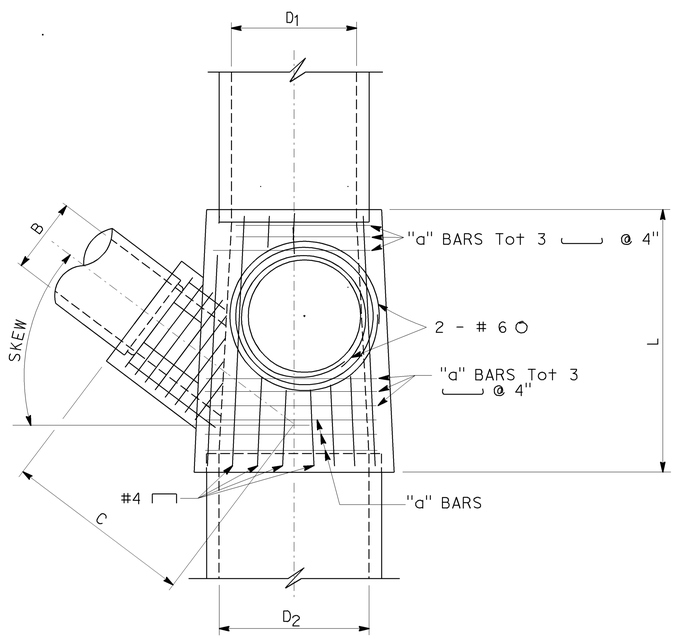

PLAN

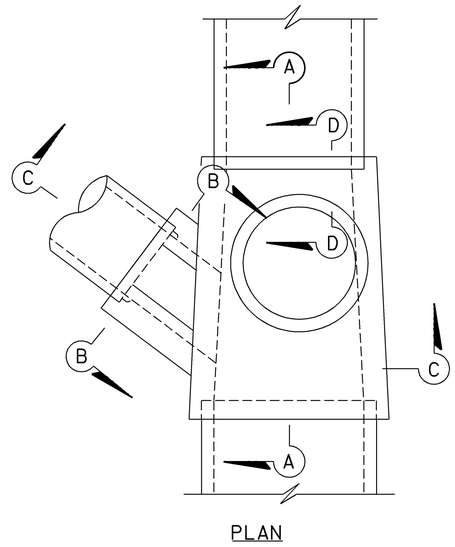

PLAN

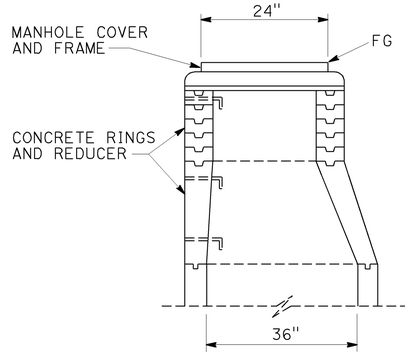

TYPE MH
UPPER STRUCTURE

DESIGN NOTES:

1. LIVE LOAD: HS20-44 TRUCK. EARTH PRESSURES: 140 LBS/CF VERTICAL, 100 LBS/CF HORIZONTAL.
2. UNIT STRESSES: F'_c = 3,600 PSI; F_y = 60,000 PSI
3. MAXIMUM FILL HEIGHT = 20 FT.

SPAN	"a" BARS	TOP AND BOTTOM * SLAB THICKNESS (ts, bs)
3.5′	#4 @ 4"	8"
4.0′	#4 @ 4"	8"
4.5′	#5 @ 5"	8"
5.0′	#5 @ 4½"	8"
5.5′	#6 @ 5½"	8"
6.0′	#6 @ 5½"	9"
6.5′	#6 @ 4½"	9"
7.0′	#6 @ 4"	9½"

* WHEN FILL OVER JUNCTION STRUCTURE IS 2′ OR LESS, ts SHALL BE INCREASED BY 2".

GENERAL NOTES:

1. PLANS SHALL DESIGNATE: INLET AND OUTLET PIPE DIAMETERS, UPPER STRUCTURE OR MANHOLE (IF REQUIRED), LATERAL PIPE DIAMETER AND SKEW (IF REQUIRED), C, H, AND H_b. MANHOLE OR LATERAL MAY BE OMITTED.
2. UPPER STRUCTURE, WHEN REQUIRED, MAY BE ANY DESIGNATED INLET TYPE AS SHOWN ON STANDARD PLAN D72, D73, D74, D75 OR THIS SHEET.
3. RISERS SHALL BE POSITIONED TO EITHER SIDE OF THE STRUCTURE AS SHOWN.
4. EACH RISER SHALL HAVE A LADDER. FOR DETAILS SEE STD PLAN D93.
5. THICKNESS OF DECK SHALL VARY AS NECESSARY TO PROVIDE A LEVEL MANHOLE SEAT.
6. REINFORCING STEEL SHALL BE PLACED 2" CLEAR, EXCEPT AS SHOWN.
7. MAXIMUM SKEW OF LATERAL PIPE B IS 45°.
8. LATERAL MAY BE PLACED IN EITHER SIDE WALL.
9. WHERE D_1 AND/OR D_2 ARE LESS THAN 3′-6", CLEAR DISTANCE BETWEEN SIDE WALLS SHALL BE 3′-6". END WALLS SHALL BE 6" THICK WITH #4 @ 12" PLACED BOTH WAYS.
10. SIDE WALLS SHALL BE FLUSH WITH INSIDE OF INLET AND OUTLET PIPES WHEN PIPE DIAMETERS ARE 3′-6" OR MORE.
11. L IS 60" MINIMUM.
12. WHEN C IS NOT SPECIFIED, BRING THE LATERAL DIRECTLY INTO THE WALL OF THE STRUCTURE.
13. WHEN C IS SPECIFIED, CONTRACTOR MAY, AT HIS OPTION, BRING THE LATERAL DIRECTLY INTO WALL FOR USE AS AN INSIDE FORM. A COLLAR CONFORMING WITH WALL THICKNESS AND REINFORCEMENT AS SHOWN IN SECTION B-B SHALL BE POURED AROUND THE PIPE.
14. WHEN LATERAL IS EXTENDED DIRECTLY INTO THE WALL, IT SHALL BE MITERED AS NECESSARY TO BE FLUSH WITH WALL.
15. "B" BARS SHALL EXTEND A MIN OF 8" ON EITHER SIDE OF OPENING.
16. ADJACENT TO EACH SIDE OF THE OPENING, PLACE ADDITIONAL REINFORCEMENT EQUIVALENT TO HALF THE INTERRUPTED MAIN REINFORCEMENT.

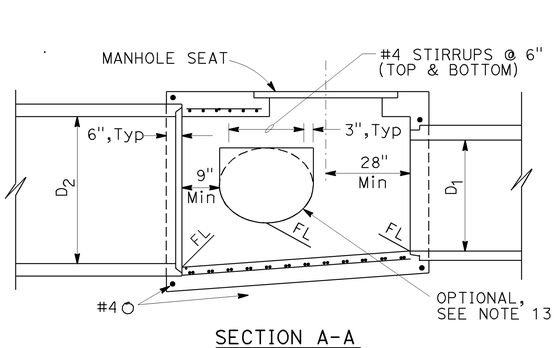

SECTION A-A

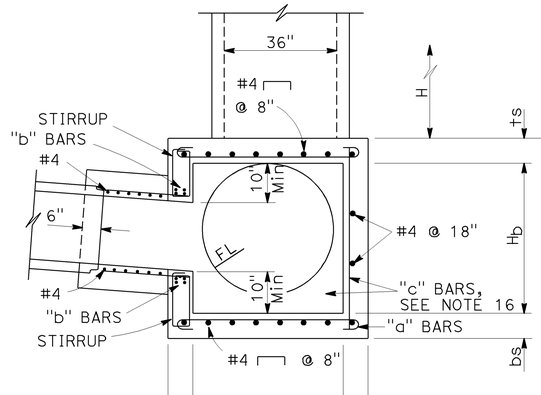

SECTION C-C

H_b	"c" BARS	SIDEWALL THICKNESS (t)
66" or less	#4 @ 4"	8"
78"	#5 @ 4"	8½"
84"	#5 @ 4"	9"
96"	#6 @ 4"	9½"

B	"b" BARS TOP & BOTTOM
30" OR LESS	#5 Tot 4
36"	#5 Tot 4
42"	#5 Tot 4
48"	#5 Tot 4
54"	#5 Tot 4
60"	#6 Tot 4

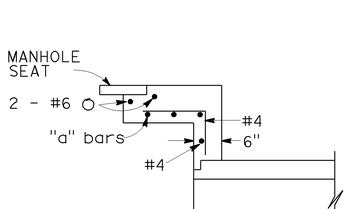

SECTION D-D

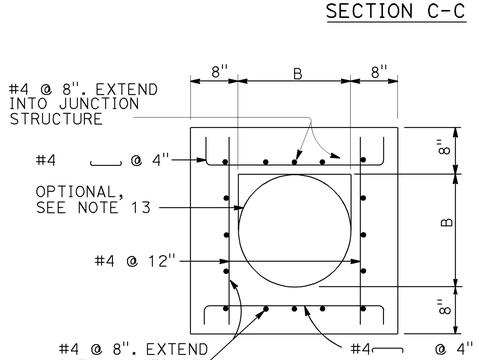

SECTION B-B

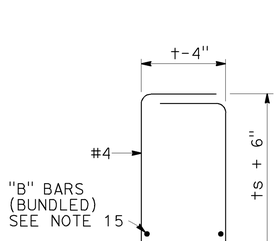

STIRRUPS

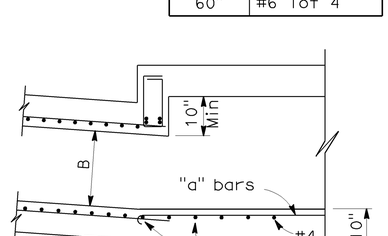

SECTION C-C (OPTIONAL)

MAXIMUM FILL HEIGHT = 7.75 ft
FOR Reinf AND DETAILS NOT SHOWN SEE SECTION C-C

MANHOLE JUNCTION STRUCTURE
DETAIL 20

THIS PLAN ACCURATE FOR DRAINAGE WORK ONLY

4 42

DETAIL 20
DRAINAGE DETAILS

NO SCALE

DD-35

CALCULATED-DESIGNED BY: RASHOD GIBSON
CHECKED BY: BROOKE RIVERA
REVISED BY: DUC TRAN
DATE REVISED: 8/10/09
CONSULTANT FUNCTIONAL SUPERVISOR: ANDRZEJ NOWAK
STATE OF CALIFORNIA - DEPARTMENT OF TRANSPORTATION
Caltrans

LAST REVISION DATE PLOTTED => 03-FEB-2010
TIME PLOTTED => 10:33
08-10-09

BORDER LAST REVISED 8/1/2008
RELATIVE BORDER SCALE IS IN INCHES 0 1 2 3
USERNAME => trcarol
DGN FILE => c07163ic035.dgn
CU 12235
EA 071631

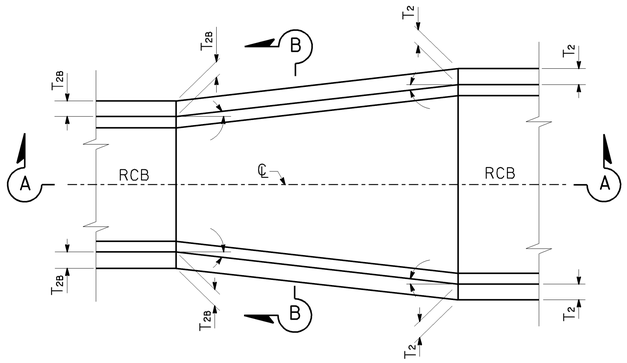

PLAN

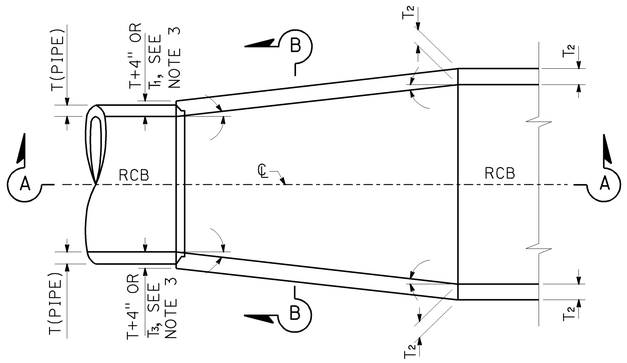

PLAN

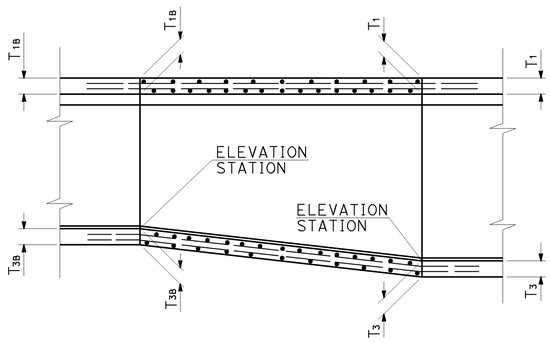

SECTION A-A

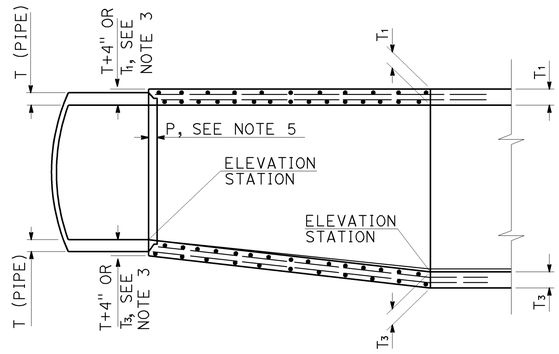

SECTION A-A

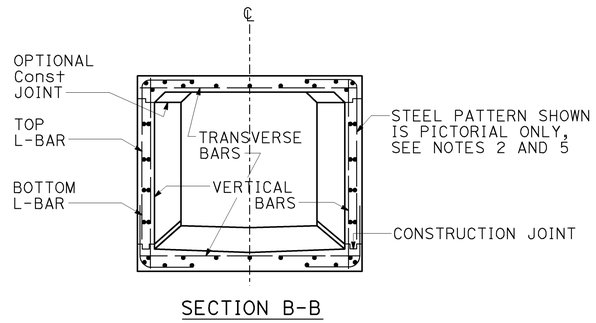

SECTION B-B

TRANSITION STRUCTURE SINGLE RCB TO SINGLE RCB DETAIL 21

2 4

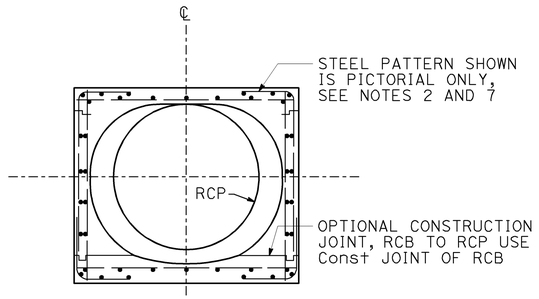

SECTION B-B

TRANSITION STRUCTURE RCB TO RCP DETAIL 22

2

SINGLE RCB TO SINGLE RCB NOTES:

1. THE HORIZONTAL ANGLE OF DIVERGENCE OR CONVERGENCE, θ, SHALL NOT EXCEED 5°45′.
2. THE REINFORCING STEEL BAR SIZE, SPACING AND COVER OVER THE STEEL OF STRAIGHT TRANSVERSE BARS IN TOP AND BOTTOM SLABS, OF L-BARS IN TOP AND BOTTOM CORNERS, OF STRAIGHT VERTICAL BARS IN SIDEWALLS AND/OR LONGITUDINAL DISTRIBUTION AND TIE BARS IN TOP OR BOTTOM SLABS OR SIDE WALLS SHALL BE THOSE OF WHICHEVER ADJOINING RCB SECTION PROVIDES THE GREATER STEEL AREA FOR EACH TYPE OF BAR AND GREATEST COVER. THE BAR LENGTHS SHALL VARY UNIFORMLY THROUGHOUT THE TRANSITION.
3. THE THICKNESS OF THE WALLS AND SLABS SHALL BE THOSE OF THE ADJOINING RCB SECTION AT EACH END OF THE TRANSITION AND SHALL VARY UNIFORMLY BETWEEN THE TWO ENDS.
4. f′c = 4,000 PSI AT 28 DAYS AND THE CONCRETE SHALL BE THE SAME MIX AS THE ADJACENT RCB.
5. ALL STEEL EXCEPT LONGITUDINAL STEEL SHALL BE GRADE 60 BILLET STEEL CONFORMING TO ASTM A 615 AND SHALL TERMINATE 1 1/2" CLEAR OF CONCRETE SURFACE UNLESS OTHERWISE SHOWN.
6. THE TRANSITION STRUCTURE SHALL BE CONSTRUCTED IN ACCORDANCE WITH THE STRUCTURAL NOTES APPLYING TO RCB STRUCTURES SHOWN ON THE PLANS.
7. DETAILS OF CONSTRUCTION JOINTS AND KEYWAYS SHALL BE AS SHOWN ON THE PLANS FOR SINGLE RCB STRUCTURES.

RCB TO RCP NOTES:

1. THE HORIZONTAL ANGLE OF DIVERGENCE OR CONVERGENCE, θ, SHALL NOT EXCEED 5°45′.
2. THE REINFORCING STEEL BAR SIZES, SPACING, PATTERN AND COVER OVER THE STEEL SHALL BE AS FOLLOWS:
   RCB TO RCP - THAT OF RCB SECTION.
3. THE CONCRETE THICKNESS SHALL BE AS FOLLOWS:
   RCB TO RCP - THAT OF RCB SECTION UNLESS THE WALL THICKNESS OF THE RCP PLUS 4" IS GREATER, IN WHICH CASE THE CONCRETE THICKNESS SHALL VARY UNIFORMLY FROM THAT OF THE RCB SECTION TO THAT OF THE RCP WALL PLUS 4".
4. THE INTERIOR SURFACE SHALL BE SMOOTH AND VARY UNIFORMLY BETWEEN THE TWO ADJOINING SECTIONS.
5. AT RCP JUNCTURE, EMBEDMENT P SHALL BE 5" FOR PIPE SIZE OF 96" OR LESS, AND 8" FOR PIPE SIZES OVER 96".
6. f′c = 4,000 PSI AT 28 DAYS AND THE CONCRETE SHALL BE THE SAME MIX AS THE ADJACENT RCB.
7. ALL STEEL, EXCEPT LONGITUDINAL STEEL SHALL BE GRADE 60 BILLET STEEL CONFORMING TO ASTM A 615 AND SHALL TERMINATE 1 1/2" CLEAR OF CONCRETE SURFACE UNLESS OTHERWISE SHOWN.
8. KEYED CONSTRUCTION JOINTS OF THE SAME DIMENSIONS AS THOSE OF THE RCB MAY BE CARRIED THROUGH THE TRANSITION STRUCTURE AT THE CONTRACTOR'S OPTIONS. SEE SECTION B-B.
9. THE TRANSITION STRUCTURE SHALL BE CONSTRUCTED IN ACCORDANCE THE STRUCTURAL NOTES APPLYING TO RCB STRUCTURES SHOWN ON THE PLANS, STANDARD PLANS, AND SPECIFICATIONS.

DETAIL 21, DETAIL 22 DRAINAGE DETAILS

NO SCALE

DD-36

THIS PLAN ACCURATE FOR DRAINAGE WORK ONLY

Dist	COUNTY	ROUTE	POST MILES TOTAL PROJECT	SHEET No.	TOTAL SHEETS
12	Ora	22,405, 605	R0.3/R0.9, 22.3/24.0,3.0/R1.6	434	1929

REGISTERED CIVIL ENGINEER — 8/10/09 DATE

JENNIFER BROOKE RIVERA No. C70332 Exp.09/30/10 CIVIL — REGISTERED PROFESSIONAL ENGINEER — STATE OF CALIFORNIA

2-1-10
PLANS APPROVAL DATE

THE STATE OF CALIFORNIA OR ITS OFFICERS OR AGENTS SHALL NOT BE RESPONSIBLE FOR THE ACCURACY OR COMPLETENESS OF ELECTRONIC COPIES OF THIS PLAN SHEET.

AECOM
999 TOWN & COUNTRY RD
ORANGE, CA 92868

ORANGE COUNTY TRANSPORTATION AUTHORITY
550 S. MAIN STREET
ORANGE, CA 92863-1584

REVISED BY	DATE REVISED
DUC TRAN	8/10/09

CALCULATED-DESIGNED BY: RASHOD GIBSON
CHECKED BY: BROOKE RIVERA

CONSULTANT FUNCTIONAL SUPERVISOR: ANDRZEJ NOWAK

STATE OF CALIFORNIA - DEPARTMENT OF TRANSPORTATION
Caltrans

LAST REVISION DATE PLOTTED => 03-FEB-2010
LAST REVISION TIME PLOTTED => 10:33
08-10-09

BORDER LAST REVISED 8/1/2008

RELATIVE BORDER SCALE IS IN INCHES 0 1 2 3

USERNAME => trcarol
DGN FILE => c071631c036.dgn

CU 12235

EA 071631

Dist	COUNTY	ROUTE	POST MILES TOTAL PROJECT	SHEET No.	TOTAL SHEETS
12	Ora	22,405, 605	R0.3/R0.9, 22.3/24.0,3.0/R1.6	435	1929

REGISTERED CIVIL ENGINEER — 8/10/09 DATE

JENNIFER BROOKE RIVERA No. C70332 Exp.09/30/10 CIVIL — REGISTERED PROFESSIONAL ENGINEER — STATE OF CALIFORNIA

2-1-10
PLANS APPROVAL DATE

THE STATE OF CALIFORNIA OR ITS OFFICERS OR AGENTS SHALL NOT BE RESPONSIBLE FOR THE ACCURACY OR COMPLETENESS OF ELECTRONIC COPIES OF THIS PLAN SHEET.

AECOM 999 TOWN & COUNTRY RD ORANGE, CA 92868	ORANGE COUNTY TRANSPORTATION AUTHORITY 550 S. MAIN STREET ORANGE, CA 92863-1584

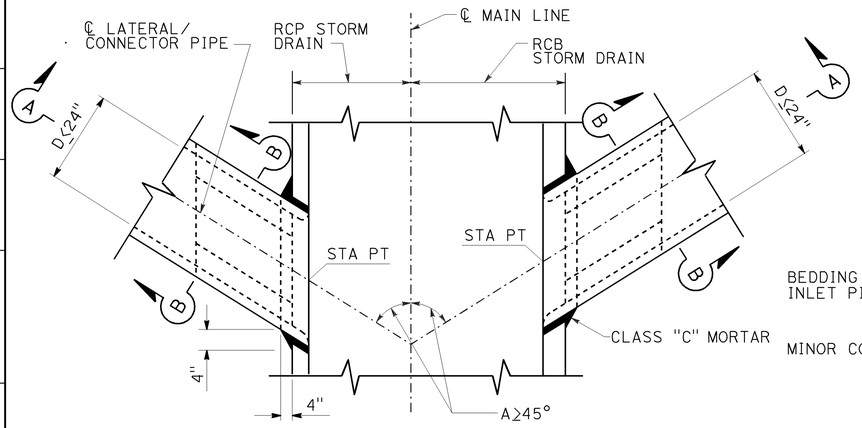

CASE 1
PLAN

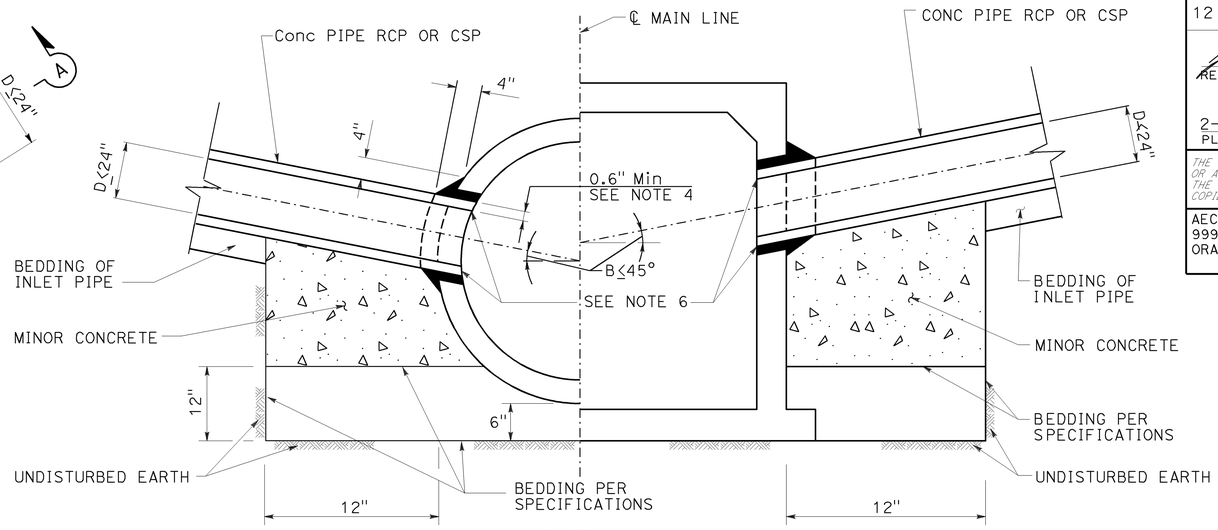

CASE 1
SECTION A-A

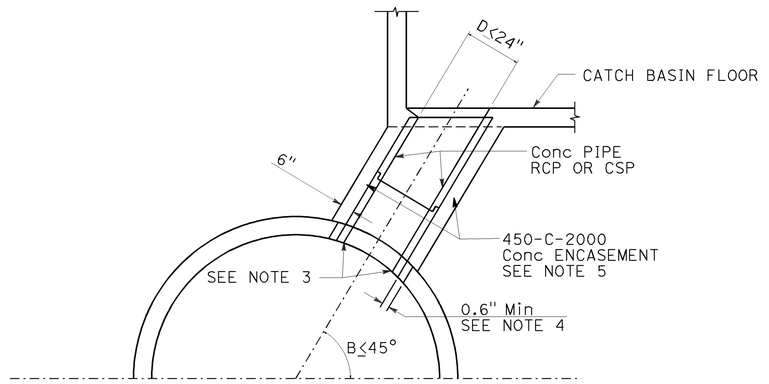

CASE 2
(SEE NOTES 9 & 10)

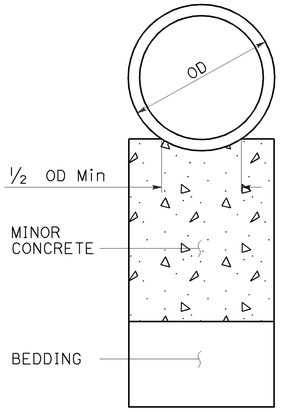

CASE 1
SECTION B-B

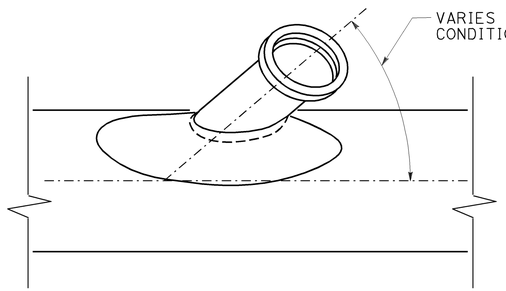

PLAN

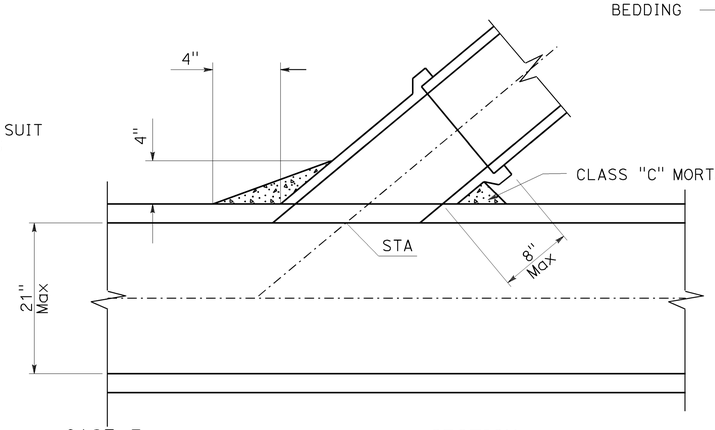

CASE 3
SADDLE CONNECTION

SECTION

NOTES:

CASE 1 AND CASE 2

1. IF ANGLE A IS LESS THAN 45° OR IF D IS LARGER THAN 24 INCH, THEN ANOTHER DETAIL SHALL BE SPECIFIED.
2. THE OUTSIDE DIAMETER OF THE INLET PIPE SHALL NOT EXCEED ONE-HALF THE INSIDE DIAMETER OF THE MAIN LINE.
3. THE INLET PIPE SHALL ENTER THE MAIN LINE RADIALLY. IF THE INLET PIPE CANNOT ENTER RADIALLY, THEN ANOTHER DETAIL SHALL BE SPECIFIED.
4. THE SIZE OF THE OPENING INTO THE MAIN LINE SHALL BE THE OUTSIDE DIAMETER OF THE INLET PIPE PLUS 1 INCH MINIMUM TO 3 INCH MAXIMUM.
5. ALL CONNECTOR PIPES FOR CASE 2 SHALL BE ENCASED IN CONCRETE IF LAID WITHIN THE MAIN LINE EXCAVATED TRENCH OR IF LAID ON FILL WHICH HAS NOT BEEN DENSIFIED.
6. BURN OR CHIP END OF CONNECTOR PIPE FLUSH WITH INNER SURFACE OF MAIN LINE. ROUND EDGE OF CONCRETE PIPE OR RCP.
7. ALL CSP AND FITTINGS SHALL BE GALVANIZED.
8. STATION SPECIFIED ON THE PROJECT DRAWINGS APPLIES AT THE INTERSECTION OF THE INSIDE WALL OF MAIN LINE AND THE CENTER LINE OF INLET PIPE.
9. CASE 2 SHALL NOT BE USED TO CONNECT TO THE FLOOR OF A GRATING CATCH BASIN WHERE THE GRATE WILL BE SUBJECT TO VEHICLE TRAFFIC.
10. FOR CASE 2, NOT MORE THAN 11.5 FT OF INLET PIPE SHALL BE LOCATED WITHIN THE MAIN LINE EXCAVATED TRENCH.

CASE 3

11. CONNECTIONS TO PIPES 21 INCH OR LESS IN DIAMETER WITHOUT JUNCTION STRUCTURES OR PRECAST Y BRANCHES SHALL BE MADE WITH SADDLES.
12. THE OUSIDE DIAMETER OF THE INLET PIPE SHALL NOT EXCEED ONE-HALF THE INSIDE DIAMETER OF THE MAIN LINE.
13. TRIM OR CUT SADDLE TO FIT SNUGLY OVER THE OUTSIDE OF THE MAIN LINE SO ITS AXIS WILL BE ON THE LINE AND GRADE OF THE CONNECTOR PIPE.
14. THE OPENING INTO THE PIPE SHALL BE CUT AND TRIMMED TO FIT THE SADDLE SO THAT NO PART WILL PROJECT WITHIN THE BORE OF THE SADDLE PIPE.
15. THE CONNECTOR PIPE SHALL BE SUPPORTED AS SHOWN IN CASES 1 AND 2.

JUNCTION STRUCTURE No. 3 (JS No.3)
DETAIL 23

THIS PLAN ACCURATE FOR DRAINAGE WORK ONLY

34 44A 44B 54 54A 57A 58A 64
66 66B 72A 72C 73 73A 74 76 89 89A 91

DETAIL 23
DRAINAGE DETAILS
NO SCALE

DD-37

STATE OF CALIFORNIA - DEPARTMENT OF TRANSPORTATION
CONSULTANT FUNCTIONAL SUPERVISOR: ANDRZEJ NOWAK
CALCULATED-DESIGNED BY: RASHOD GIBSON
CHECKED BY: BROOKE RIVERA
REVISED BY: DUC TRAN
DATE REVISED: 8/10/09

LAST REVISION DATE PLOTTED => 03-FEB-2010
TIME PLOTTED => 10:33
08-10-09

BORDER LAST REVISED 8/1/2008
RELATIVE BORDER SCALE IS IN INCHES 0 1 2 3
USERNAME => trcarol
DGN FILE => c071631c037.dgn
CU 12235
EA 071631

Dist	COUNTY	ROUTE	POST MILES TOTAL PROJECT	SHEET No.	TOTAL SHEETS
12	Ora	22,405, 605	R0.3/R0.9, 22.3/24.0,3.0/R1.6	436	1929

REGISTERED CIVIL ENGINEER — 8/10/09 DATE

2-1-10
PLANS APPROVAL DATE

REGISTERED PROFESSIONAL ENGINEER — JENNIFER BROOKE RIVERA — No. C70332 — Exp. 09/30/10 — CIVIL — STATE OF CALIFORNIA

THE STATE OF CALIFORNIA OR ITS OFFICERS OR AGENTS SHALL NOT BE RESPONSIBLE FOR THE ACCURACY OR COMPLETENESS OF ELECTRONIC COPIES OF THIS PLAN SHEET.

AECOM
999 TOWN & COUNTRY RD
ORANGE, CA 92868

ORANGE COUNTY
TRANSPORTATION AUTHORITY
550 S. MAIN STREET
ORANGE, CA 92863-1584

NOTES:

1. STATIONS SPECIFIED ON THE PROJECT DRAWINGS APPLY TO THE INTERSECTION OF CENTER LINES OF MAIN LINE AND LATERALS, EXCEPT THAT STATIONS FOR CATCH BASIN CONNECTOR PIPES APPLY AT INSIDE WAL;L OF STRUCTURE.

2. REINFORCING STEEL SHALL CONFORM TO ASTM A 615M, GRADE 300. (ASTM A 615, GRADE 40), AND SHALL TERMINATE 40 mm (1½") CLEAR OF CONCRETE SURFACE UNLESS OTHERWISE SHOWN.
   a. W BARS ARE OF SIZE AND SPACING SPECIFIED FOR WALL STEEL ON PROJECT DRAWINGS, AND SHALL BE CUT IN CENTER OF OPEING AND BENT INTO TOP AND BOTTOM OF JUNCTION STRUCTURE.
   b. OMIT H BARS WHEN SOFFIT OF SPUR IS 300 mm (12") OR LESS BELOW SOFFIT OF MAIN LINE, AND OMIT G BARS WHEN INVERT OF SPUR IS 300 mm (12") OR LESS ABOVE FLOOR OF MAIN LINE.

3. WHEN CONNECTING TO EXISTING RCB, BREAKOUT LIMITS AND DETAILS SHALL BE SHOWN ON THE PROJECT DRAWINGS.

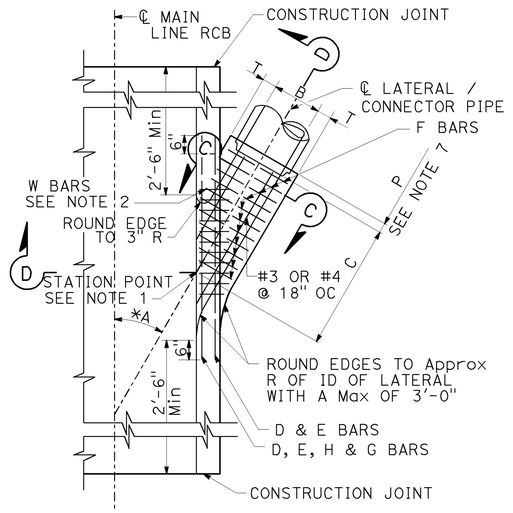

PLAN

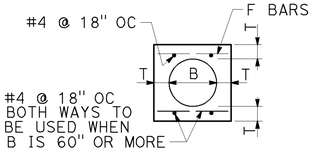

SECTION C-C

B	T	D,E,H & G BARS	F BARS
12"	5"	#5	#4 @ 6" OC
15"	5"		
18"	5"		
21"	5"		
24"	5 1/4"		
27"	5 1/2"		
30"	6"		
33"	6 1/4"		
36"	6 1/2"		
39"	7"		
42"	7 1/2"	#6	#5 @ 6" OC
45"	7 3/4"		
48"	8"		
51"	8 1/2"		
54"	9"		
57"	9 1/4"		
60"	9 1/2"		

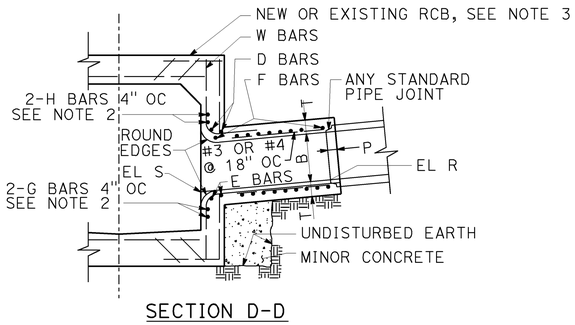

SECTION D-D

JUNCTION STRUCTURE - PIPE TO RCB
DETAIL 17

2D 4A 9 12 23 24 24A 30 30A 30B 30C 30D 30E 30F 33 33A 34A 36 41 45

BARS - #6 @ 4" OC,
LENGTH = D+3'-0"
PLACED UNDER CUT BARS AND ON TOP OF UNCUT BARS. OMIT BARS THAT FALL OVER SIDEWALLS.

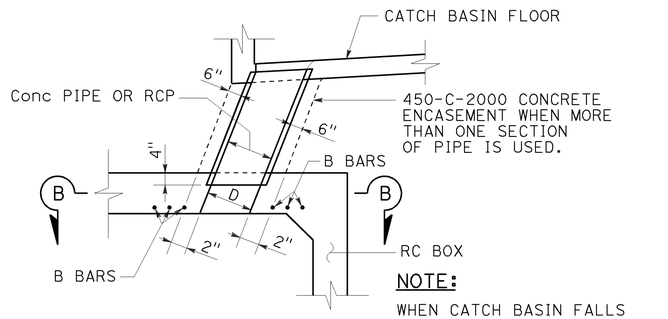

NOTE:

WHEN CATCH BASIN FALLS ON TOP OF BOX, THE OPENING MAT BE FORMED THROUGH FLOOR OF CATCH BASIN AND TOP SLAB OF BOX.

CASE 3
TOP SLAB ENTRANCE
D = 30" Max

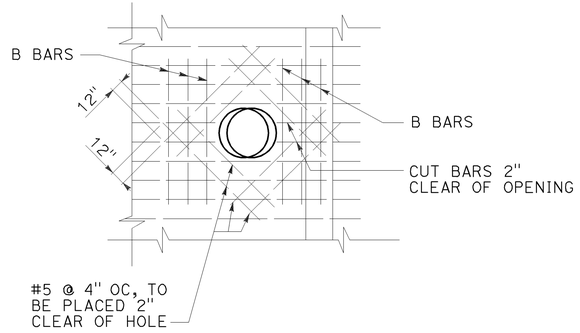

SECTION B-B

JUNCTION STRUCTURE - PIPE TO RCB
INLET ID 30"
DETAIL 24

54B

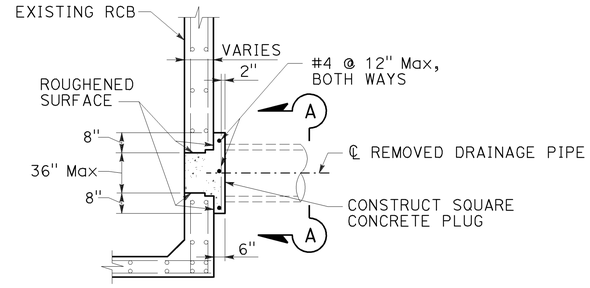

ABANDONMENT SEAL
FOR RCB INLET

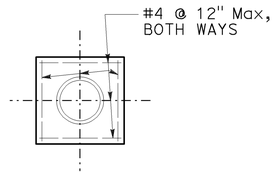

SECTION A-A

ABANDONMENT SEALS FOR RCB INLETS
DETAIL 25

THIS PLAN ACCURATE FOR DRAINAGE WORK ONLY

DETAIL 17
DETAIL 24, DETAIL 25
DRAINAGE DETAILS
NO SCALE

DD-38

REVISED BY	DATE REVISED
DUC TRAN	8/10/09

CALCULATED-DESIGNED BY: RASHOD GIBSON
CHECKED BY: BROOKE RIVERA
CONSULTANT FUNCTIONAL SUPERVISOR: ANDRZEJ NOWAK

STATE OF CALIFORNIA - DEPARTMENT OF TRANSPORTATION
Caltrans

LAST REVISION | DATE PLOTTED => 03-FEB-2010
08-10-09 | TIME PLOTTED => 10:33

BORDER LAST REVISED 8/1/2008 — RELATIVE BORDER SCALE IS IN INCHES (0 1 2 3) — USERNAME => trcarol — DGN FILE => c07163ic038.dgn — CU 12235 — EA 071631

Dist	COUNTY	ROUTE	POST MILES TOTAL PROJECT	SHEET No.	TOTAL SHEETS
12	Ora	22,405, 605	R0.3/R0.9, 22.3/24.0,3.0/R1.6	437	1929

REGISTERED CIVIL ENGINEER — 8/10/09 DATE

JENNIFER BROOKE RIVERA No. C70332 Exp. 09/30/10 CIVIL — REGISTERED PROFESSIONAL ENGINEER — STATE OF CALIFORNIA

2-1-10
PLANS APPROVAL DATE

THE STATE OF CALIFORNIA OR ITS OFFICERS OR AGENTS SHALL NOT BE RESPONSIBLE FOR THE ACCURACY OR COMPLETENESS OF ELECTRONIC COPIES OF THIS PLAN SHEET.

AECOM
999 TOWN & COUNTRY RD
ORANGE, CA 92868

ORANGE COUNTY
TRANSPORTATION AUTHORITY
550 S. MAIN STREET
ORANGE, CA 92863-1584

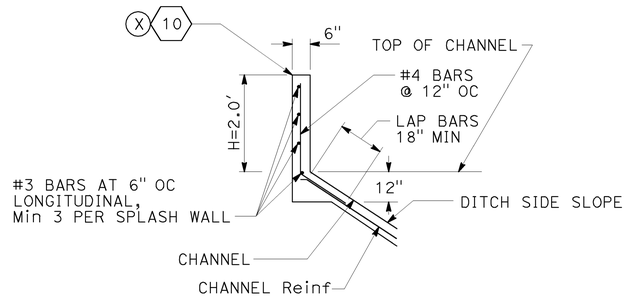

REINFORCED CONCRETE CHANNEL WALL DETAIL 27

10

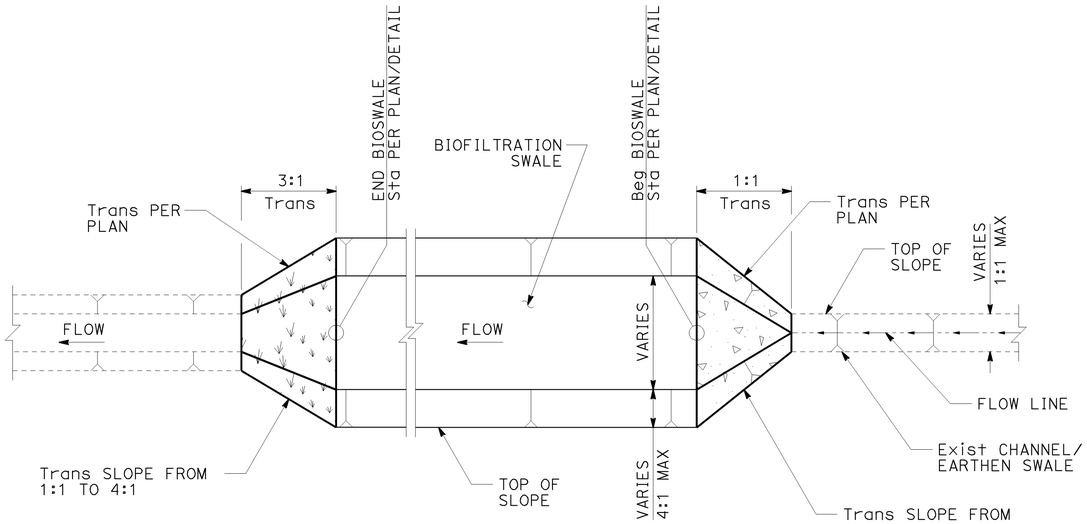

PLAN

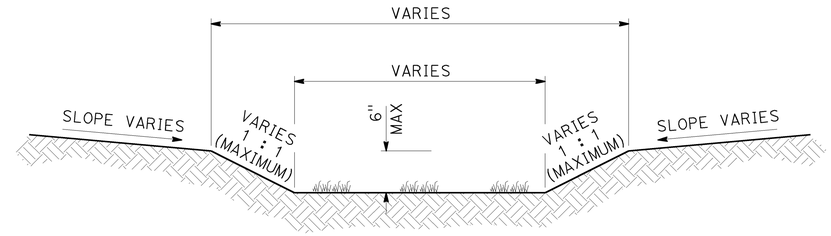

EARTHEN SWALE TRANSITION

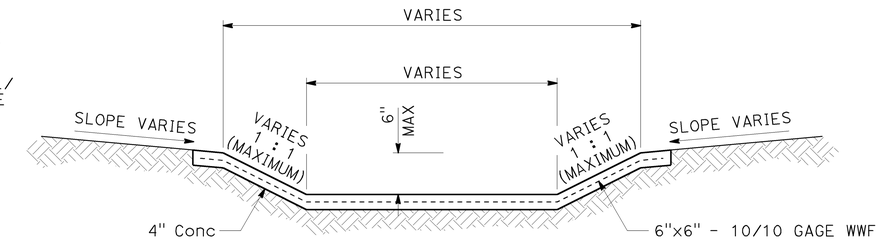

CONCRETE CHANNEL TRANSITION

Trans Exist Chnl/EARTHEN SWALE TO BIOSWALE DETAIL 26

52 53A 53B 58 93

DETAIL 26 DRAINAGE DETAILS

NO SCALE

DD-39

THIS PLAN ACCURATE FOR DRAINAGE WORK ONLY

STATE OF CALIFORNIA - DEPARTMENT OF TRANSPORTATION — Caltrans

CONSULTANT FUNCTIONAL SUPERVISOR: ANDRZEJ NOWAK

CALCULATED-DESIGNED BY: RASHOD GIBSON

CHECKED BY: BROOKE RIVERA

REVISED BY	DATE REVISED
DUC TRAN	8/10/09

LAST REVISION DATE PLOTTED => 03-FEB-2010
08-10-09 TIME PLOTTED => 10:33

BORDER LAST REVISED 8/1/2008

RELATIVE BORDER SCALE IS IN INCHES 0 1 2 3

USERNAME => trcarol
DGN FILE => c071631ic039.dgn

CU 12235

EA 071631

Dist	COUNTY	ROUTE	POST MILES TOTAL PROJECT	SHEET No.	TOTAL SHEETS
12	Ora	22,405, 605	R0.3/R0.9, 22.3/24.0,3.0/R1.6	438	1929

8/10/09
REGISTERED CIVIL ENGINEER DATE

REGISTERED PROFESSIONAL ENGINEER
MICHAEL A. WISE
No. C70400
Exp. 9-30-10
CIVIL
STATE OF CALIFORNIA

2-1-10
PLANS APPROVAL DATE

THE STATE OF CALIFORNIA OR ITS OFFICERS OR AGENTS SHALL NOT BE RESPONSIBLE FOR THE ACCURACY OR COMPLETENESS OF ELECTRONIC COPIES OF THIS PLAN SHEET.

AECOM
999 TOWN & COUNTRY RD
ORANGE, CA 92868

ORANGE COUNTY
TRANSPORTATION AUTHORITY
550 S. MAIN STREET
ORANGE, CA 92863-1584

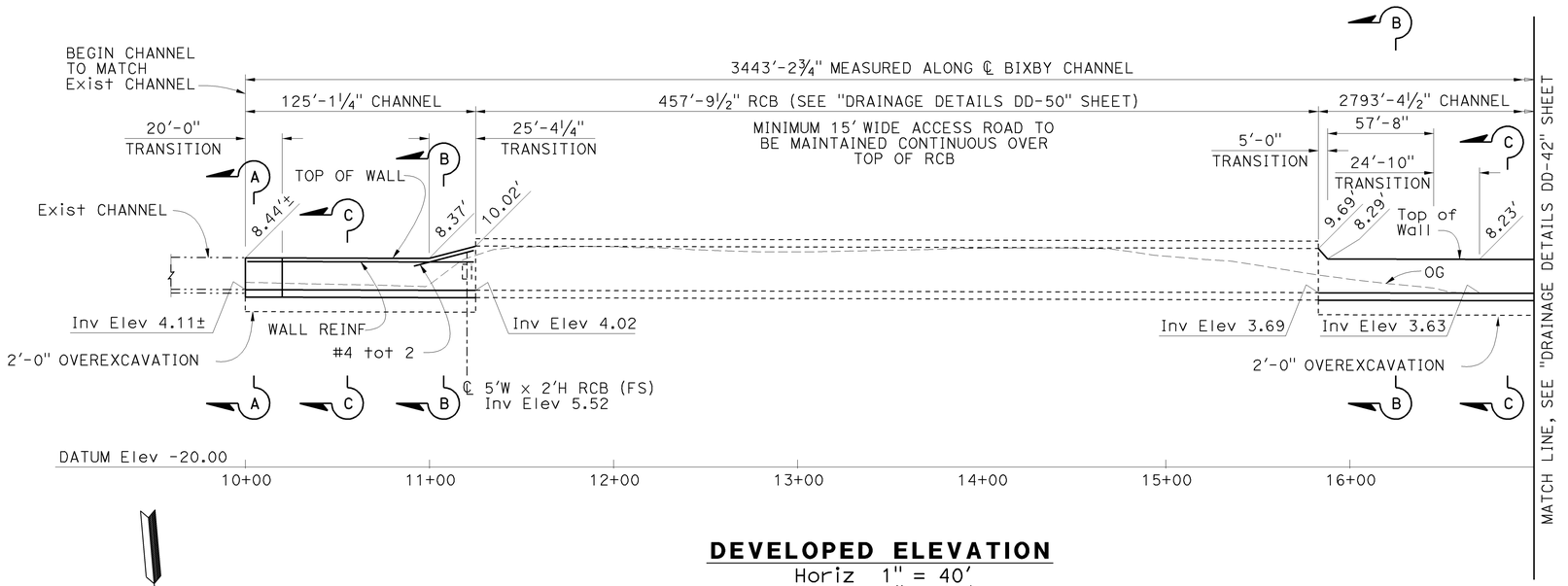

DEVELOPED ELEVATION

Horiz 1" = 40'
Vert 1" = 10'

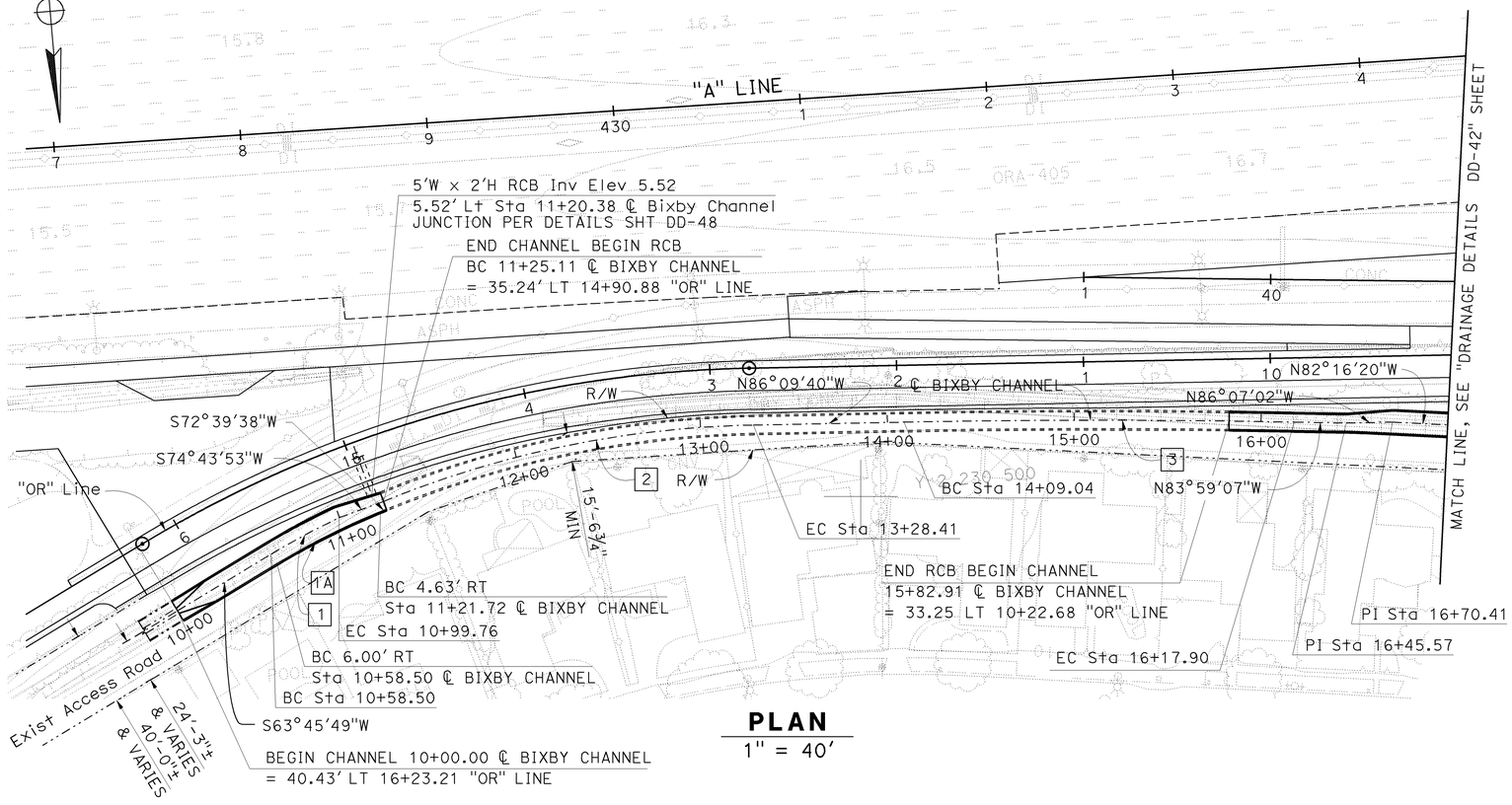

PLAN

1" = 40'

CURVE DATA				
CURVE	R	△	L	T
1	406.00'	5°49'24"	41.26'	20.65'
1A	400.00'	8°53'49"	62.11'	31.12'
2	550.00'	21°10'42"	203.30'	102.82'
3	5500.00'	2°10'33"	208.86'	104.44

DRAINAGE SYSTEM 21
DRAINAGE DETAILS

SCALE 1"=40'

DD-40

THIS PLAN ACCURATE FOR DRAINAGE WORK ONLY

STATE OF CALIFORNIA - DEPARTMENT OF TRANSPORTATION
Caltrans
CONSULTANT FUNCTIONAL SUPERVISOR: ANDRZEJ NOWAK
CALCULATED-DESIGNED BY: DANIEL HE
CHECKED BY: MIKE WISE
REVISED BY: MW
DATE REVISED: 8/10/09

LAST REVISION: DATE PLOTTED => 03-FEB-2010
08-10-09 TIME PLOTTED => 10:34

BORDER LAST REVISED 3/1/2007
RELATIVE BORDER SCALE IS IN INCHES 0 1 2 3
USERNAME => trcarol
DGN FILE => c07163ic040.dgn
CU 12235
EA 071631

Dist	COUNTY	ROUTE	POST MILES TOTAL PROJECT	SHEET No.	TOTAL SHEETS
12	Ora	22,405, 605	R0.3/R0.9, 22.3/24.0,3.0/R1.6	439	1929

REGISTERED CIVIL ENGINEER — 8/10/09 DATE

MICHAEL A. WISE No. C70400 Exp. 9-30-10 CIVIL — REGISTERED PROFESSIONAL ENGINEER — STATE OF CALIFORNIA

2-1-10
PLANS APPROVAL DATE

THE STATE OF CALIFORNIA OR ITS OFFICERS OR AGENTS SHALL NOT BE RESPONSIBLE FOR THE ACCURACY OR COMPLETENESS OF ELECTRONIC COPIES OF THIS PLAN SHEET.

AECOM
999 TOWN & COUNTRY RD
ORANGE, CA 92868

ORANGE COUNTY
TRANSPORTATION AUTHORITY
550 S. MAIN STREET
ORANGE, CA 92863-1584

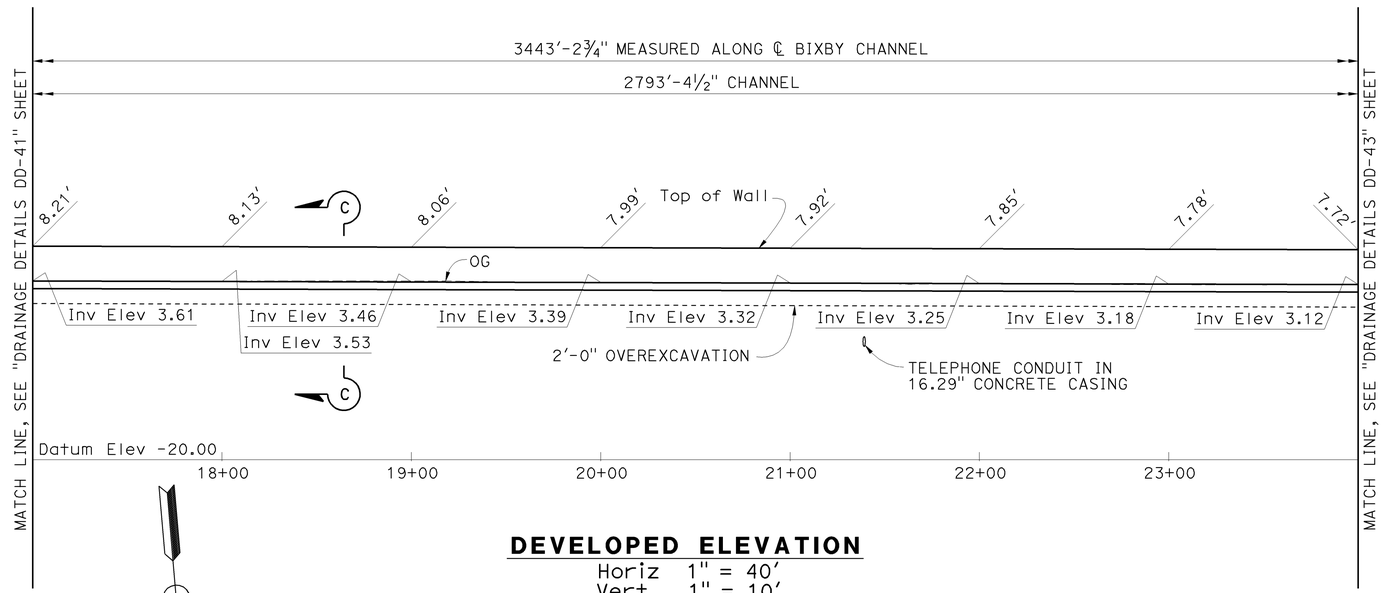

DEVELOPED ELEVATION

Horiz 1" = 40'
Vert 1" = 10'

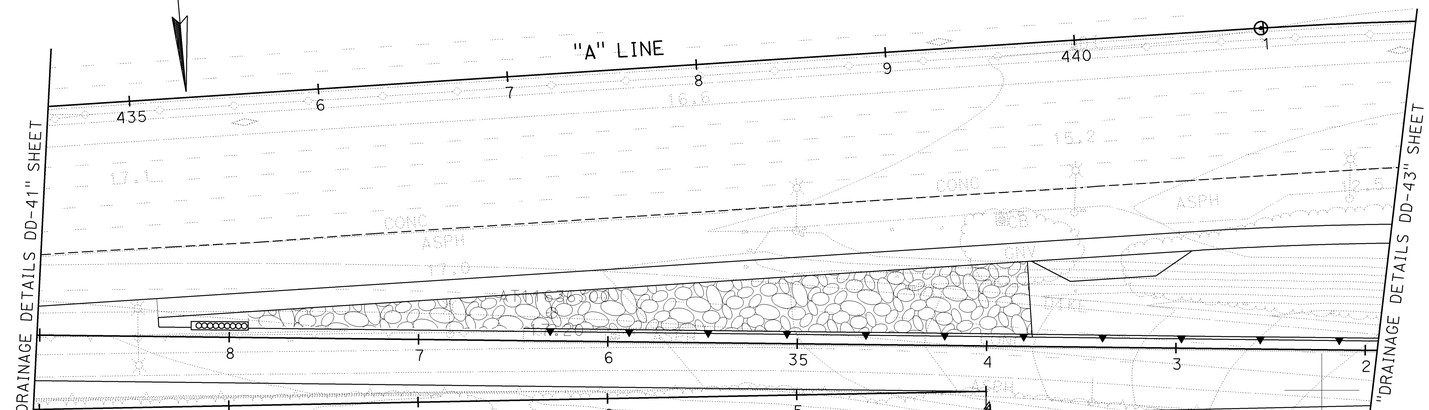

PLAN

1" = 40'

CURVE DATA				
CURVE	R	△	L	T
4	306.00'	3°48'30"	20.34'	10.17'

DRAINAGE SYSTEM 21
DRAINAGE DETAILS

SCALE 1"=40'

DD-41

THIS PLAN ACCURATE FOR DRAINAGE WORK ONLY

STATE OF CALIFORNIA - DEPARTMENT OF TRANSPORTATION — Caltrans
CONSULTANT FUNCTIONAL SUPERVISOR: ANDRZEJ NOWAK
CALCULATED-DESIGNED BY: DANIEL HE
CHECKED BY: MIKE WISE
REVISED BY: MW
DATE REVISED: 8/10/09
LAST REVISION: 08-10-09
DATE PLOTTED => 03-FEB-2010
TIME PLOTTED => 10:34

BORDER LAST REVISED 3/1/2007 | RELATIVE BORDER SCALE IS IN INCHES 0 1 2 3 | USERNAME => trcarol DGN FILE => c07163ic041.dgn | CU 12235 | EA 071631

Dist	COUNTY	ROUTE	POST MILES TOTAL PROJECT	SHEET No.	TOTAL SHEETS
12	Ora	22,405, 605	R0.3/R0.9, 22.3/24.0,3.0/R1.6	440	1929

8/10/09
REGISTERED CIVIL ENGINEER DATE

REGISTERED PROFESSIONAL ENGINEER
MICHAEL A. WISE
No. C70400
Exp. 9-30-10
CIVIL
STATE OF CALIFORNIA

2-1-10
PLANS APPROVAL DATE

THE STATE OF CALIFORNIA OR ITS OFFICERS OR AGENTS SHALL NOT BE RESPONSIBLE FOR THE ACCURACY OR COMPLETENESS OF ELECTRONIC COPIES OF THIS PLAN SHEET.

AECOM
999 TOWN & COUNTRY RD
ORANGE, CA 92868

ORANGE COUNTY
TRANSPORTATION AUTHORITY
550 S. MAIN STREET
ORANGE, CA 92863-1584

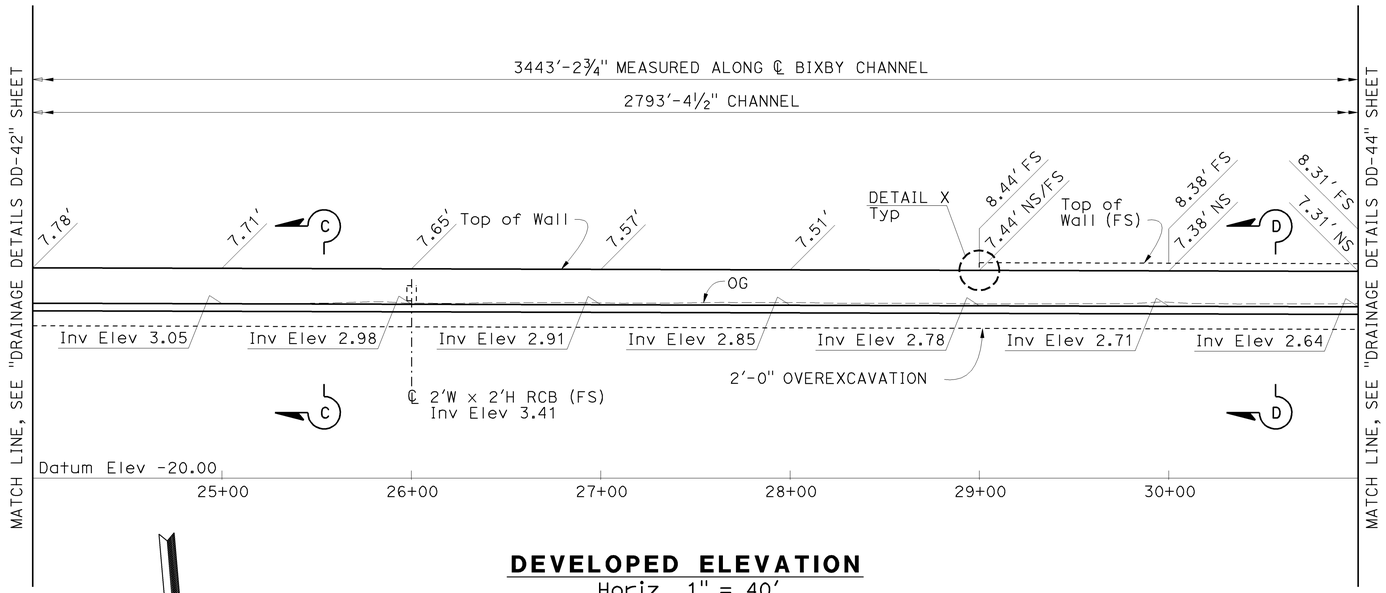

DEVELOPED ELEVATION

Horiz 1" = 40'
Vert 1" = 10'

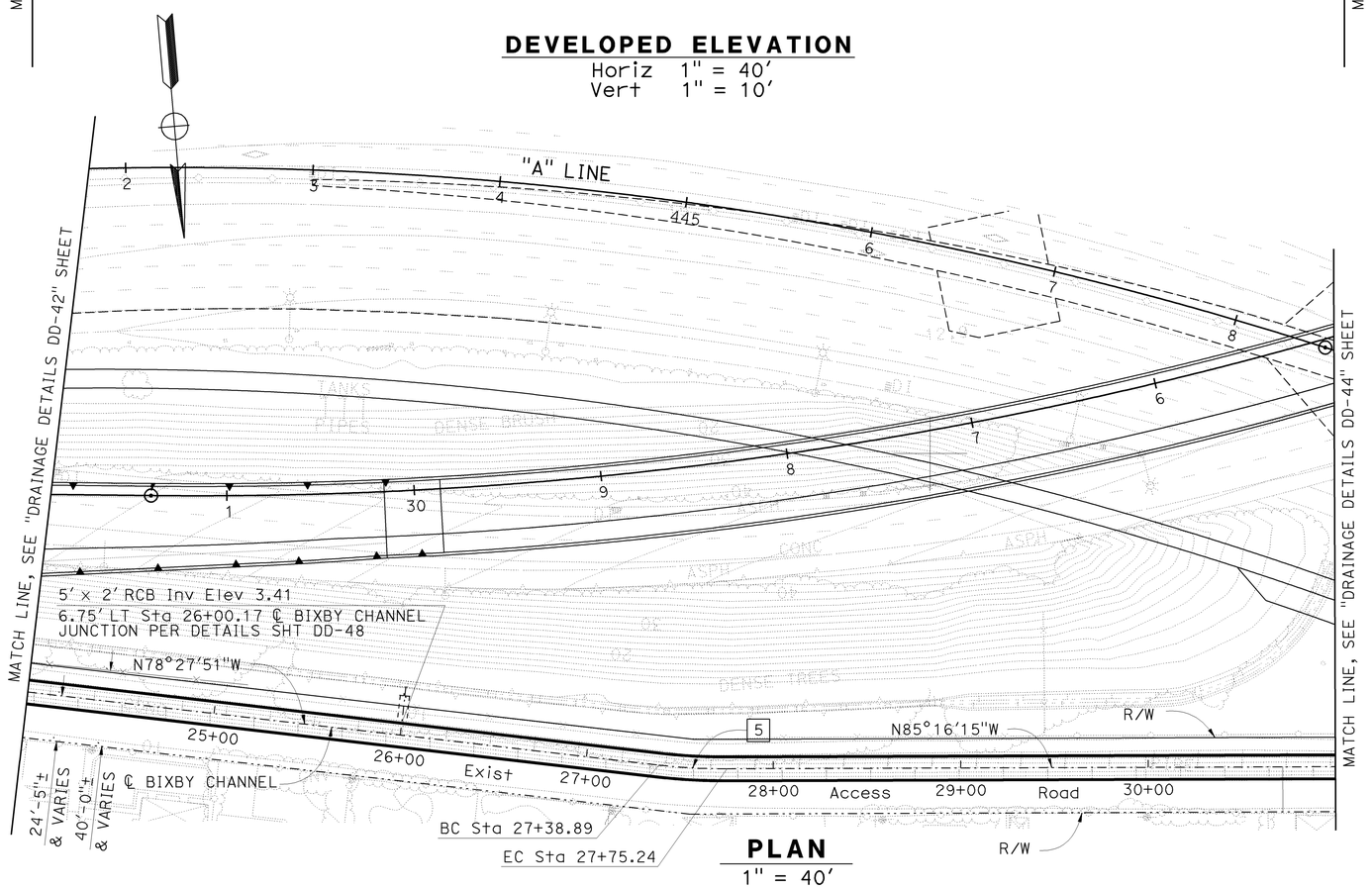

PLAN

1" = 40'

NOTE:
FOR DETAIL X, SEE "DRAINAGE DETAILS DD-47" SHEET.

CURVE DATA				
CURVE	R	△	L	T
5	306.00'	6°48'24"	36.35'	18.20'

DRAINAGE SYSTEM 21
DRAINAGE DETAILS

SCALE 1"=40'

DD-42

THIS PLAN ACCURATE FOR DRAINAGE WORK ONLY

DANIEL HE	MW	8/10/09	
MIKE WISE			
CALCULATED-DESIGNED BY	REVISED BY	DATE REVISED	
CHECKED BY			

CONSULTANT FUNCTIONAL SUPERVISOR
ANDRZEJ NOWAK

STATE OF CALIFORNIA - DEPARTMENT OF TRANSPORTATION
Caltrans

LAST REVISION DATE PLOTTED => 03-FEB-2010
TIME PLOTTED => 10:34
08-10-09

BORDER LAST REVISED 3/1/2007
RELATIVE BORDER SCALE IS IN INCHES 0 1 2 3
USERNAME => trcarol
DGN FILE => c07163ic042.dgn
CU 12235
EA 071631

Dist	COUNTY	ROUTE	POST MILES TOTAL PROJECT	SHEET No.	TOTAL SHEETS
12	Ora	22,405, 605	R0.3/R0.9, 22.3/24.0,3.0/R1.6	441	1929

8/10/09
REGISTERED CIVIL ENGINEER DATE

REGISTERED PROFESSIONAL ENGINEER
MICHAEL A. WISE
No. C70400
Exp. 9-30-10
CIVIL
STATE OF CALIFORNIA

2-1-10
PLANS APPROVAL DATE

THE STATE OF CALIFORNIA OR ITS OFFICERS OR AGENTS SHALL NOT BE RESPONSIBLE FOR THE ACCURACY OR COMPLETENESS OF ELECTRONIC COPIES OF THIS PLAN SHEET.

AECOM
999 TOWN & COUNTRY RD
ORANGE, CA 92868

ORANGE COUNTY
TRANSPORTATION AUTHORITY
550 S. MAIN STREET
ORANGE, CA 92863-1584

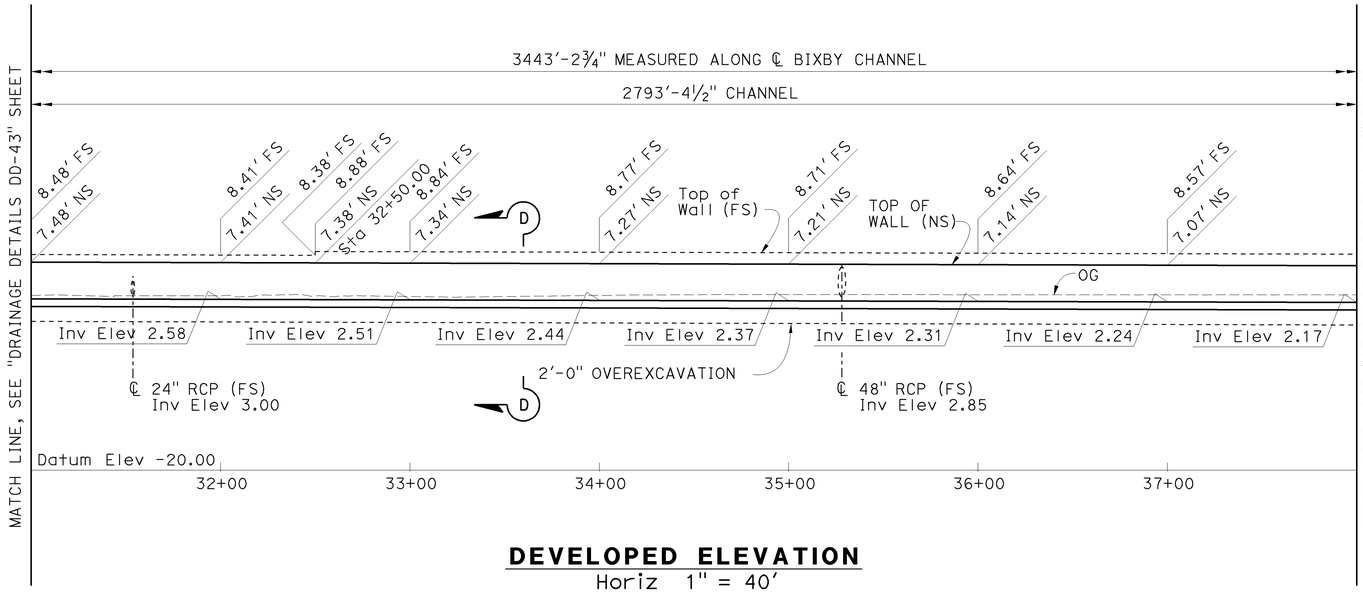

DEVELOPED ELEVATION

Horiz 1" = 40'
Vert 1" = 10'

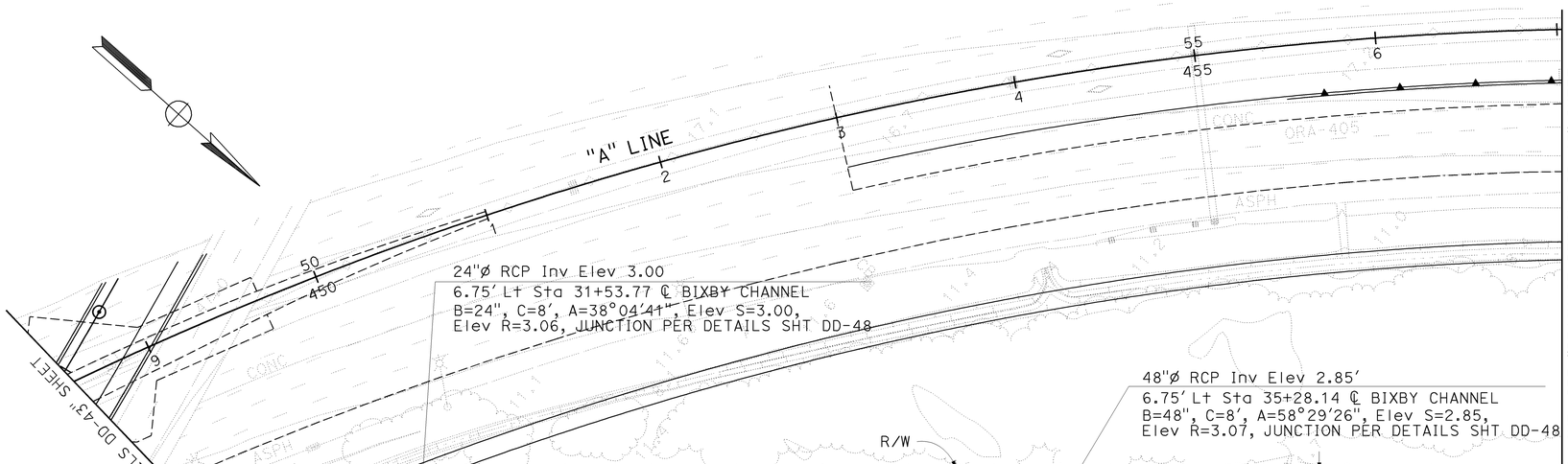

PLAN

1" = 40'

CURVE DATA				
CURVE	R	△	L	T
6	94.00'	43°36'55"	71.56'	37.61'

DRAINAGE SYSTEM 21
DRAINAGE DETAILS

SCALE 1"=40'

DD-43

THIS PLAN ACCURATE FOR DRAINAGE WORK ONLY

STATE OF CALIFORNIA - DEPARTMENT OF TRANSPORTATION
Caltrans

CONSULTANT FUNCTIONAL SUPERVISOR: ANDRZEJ NOWAK

CALCULATED-DESIGNED BY	CHECKED BY	REVISED BY	DATE REVISED
DANIEL HE	MIKE WISE	MW	8/10/09

LAST REVISION 08-10-09 DATE PLOTTED => 03-FEB-2010 TIME PLOTTED => 10:34

BORDER LAST REVISED 3/1/2007 | RELATIVE BORDER SCALE IS IN INCHES 0 1 2 3 | USERNAME => trcarol DGN FILE => c07163ic043.dgn | CU 12235 | EA 071631

Dist	COUNTY	ROUTE	POST MILES TOTAL PROJECT	SHEET No.	TOTAL SHEETS
12	Ora	22,405, 605	R0.3/R0.9, 22.3/24.0,3.0/R1.6	442	1929

REGISTERED CIVIL ENGINEER — 4/06/09 DATE

2-1-10
PLANS APPROVAL DATE

REGISTERED PROFESSIONAL ENGINEER
MICHAEL A. WISE
No. C70400
Exp. 09/30/10
CIVIL
STATE OF CALIFORNIA

THE STATE OF CALIFORNIA OR ITS OFFICERS OR AGENTS SHALL NOT BE RESPONSIBLE FOR THE ACCURACY OR COMPLETENESS OF ELECTRONIC COPIES OF THIS PLAN SHEET.

AECOM
999 TOWN & COUNTRY RD
ORANGE, CA 92868

ORANGE COUNTY
TRANSPORTATION AUTHORITY
550 S. MAIN STREET
ORANGE, CA 92863-1584

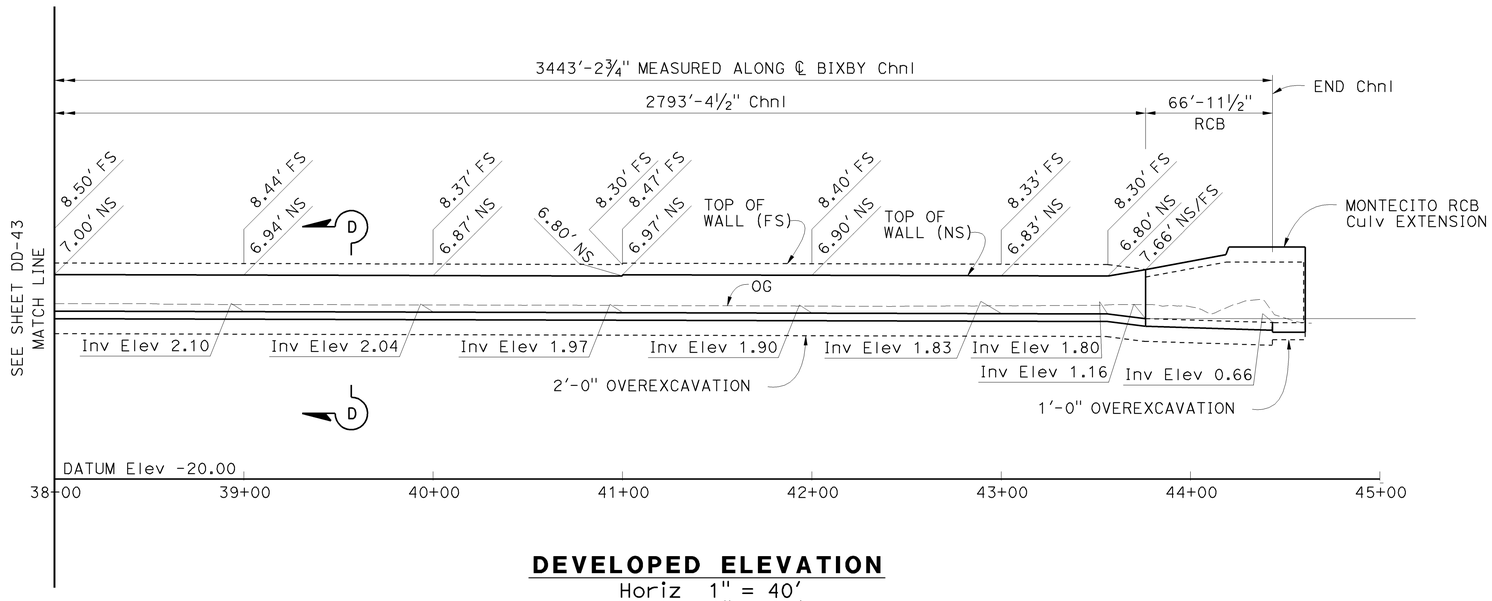

DEVELOPED ELEVATION

Horiz 1" = 40'
Vert 1" = 10'

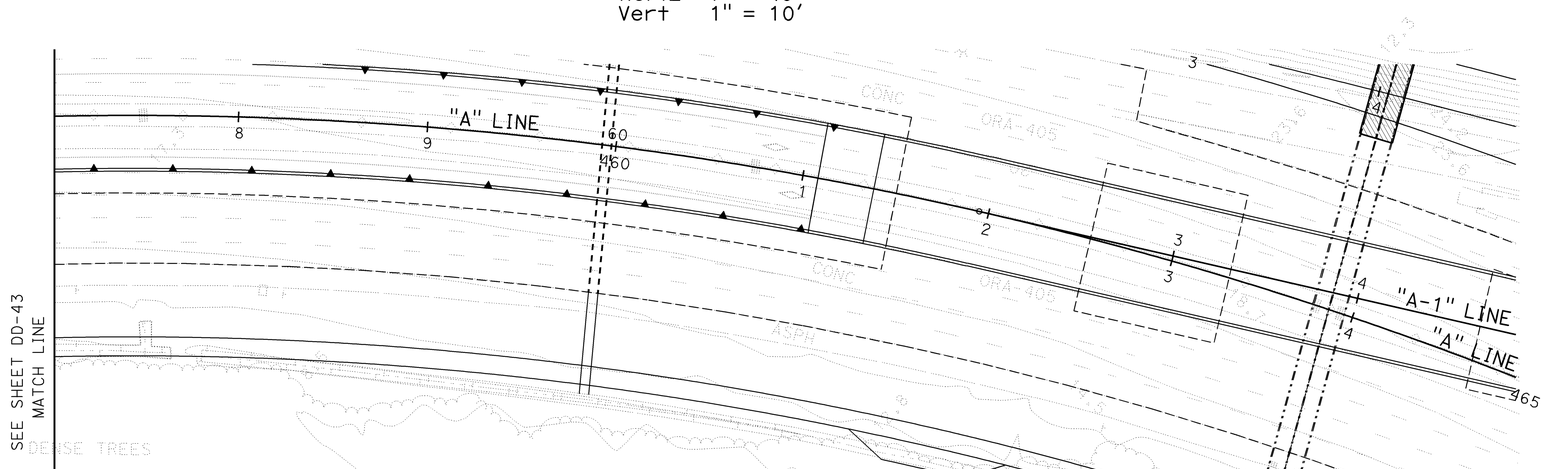

PLAN

1" = 40'

THIS PLAN ACCURATE FOR DRAINAGE WORK ONLY

DRAINAGE SYSTEM 21
DRAINAGE DETAILS

SCALE 1" = 40'

DD-44

LAST REVISION 08-10-09 | DATE PLOTTED => 03-FEB-2010 | TIME PLOTTED => 10:34

REVISED BY	DATE REVISED
DANIEL HE	
MIKE WISE	

CALCULATED-DESIGNED BY
CHECKED BY

CONSULTANT FUNCTIONAL SUPERVISOR
ANDRZEJ NOWAK

STATE OF CALIFORNIA - DEPARTMENT OF TRANSPORTATION
Caltrans

BORDER LAST REVISED 3/1/2007

RELATIVE BORDER SCALE IS IN INCHES 0 1 2 3

USERNAME => trcarol
DGN FILE => c07163ic044.dgn

CU 12235

EA 071631

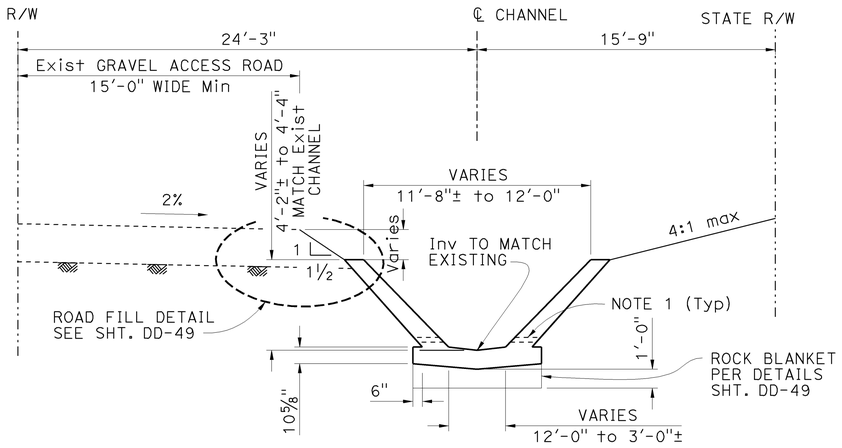

BIXBY CHANNEL SECTION A-A

SCALE: ¼" = 1'-0"

NOTE: FOR INFORMATION NOT SHOWN, SEE SECTION C-C

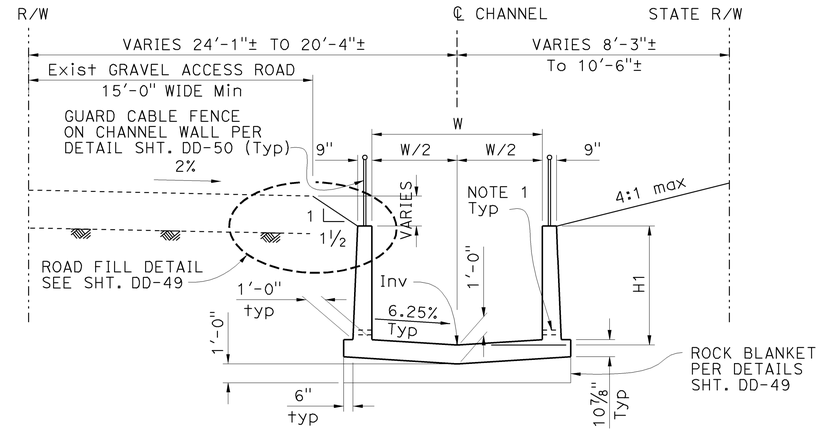

BIXBY CHANNEL SECTION B-B

SCALE: ¼" = 1'-0"

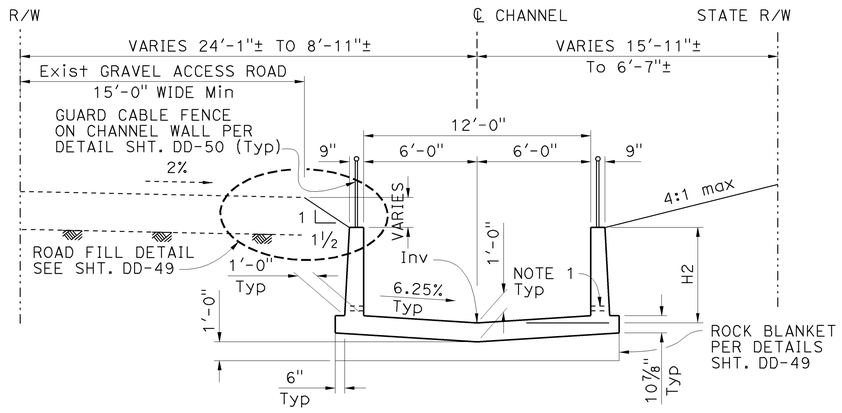

BIXBY CHANNEL SECTION C-C

SCALE: ¼" = 1'-0"

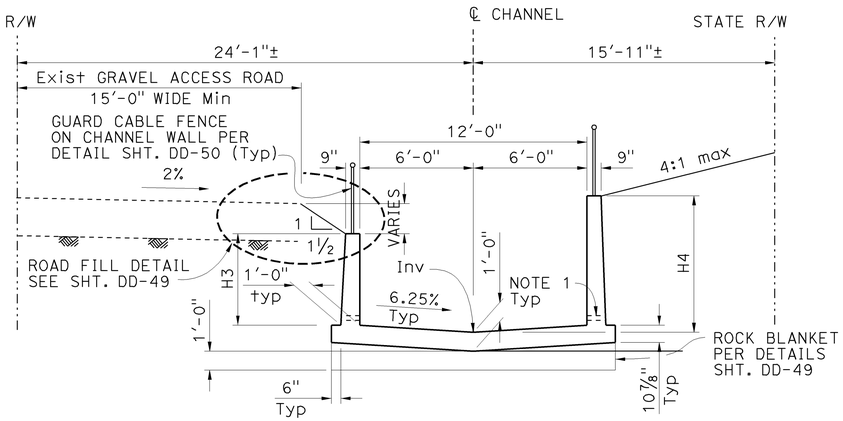

BIXBY CHANNEL SECTION D-D

SCALE: ¼" = 1'-0"

CHANNEL WALL HEIGHT AND WIDTH

STATION	H1	H2	H3	H4	W
10+20.00 to 10+99.76		4'-4"			
10+99.76 to 11+25.11	VARIES 4'-4" TO 6'-0"				VARIES 12'-0" TO 9'-0"
15+82.91 to 15+87.91	VARIES 6'-0" TO 4'-7⅜"				9'-0"
15+87.91 to 16+45.57	4'-7⅜"				9'-0"
16+45.57 to 16+70.41	4'-7⅜"				VARIES 9'-0" TO 12'-0"
16+70.41 to 24+00.00		4'-7⅜"			
24+00.00 to 29+00.00		4'-8"			
29+00.00 to 31+00.00			4'-8"	5'-8"	
31+00.00 to 32+50.00			4'-10"	5'-10"	
32+50.00 to 41+00.00			4'-10"	6'-4"	
41+00.00 to 43+56.28			5'-0"	6'-6"	
43+56.28 to 43+76.27			VARIES 5'-0" TO 6'-6"	6'-6"	

NOTES:

1. FOR CHANNEL WEEPHOLE DETAILS, SEE "DRAINAGE DETAILS, DD-48" SHEET.
2. FOR CHANNEL REINFORCEMENTS, SEE DRAINAGE DETAILS SHEETS DD-47 & DD-48.
3. TOP OF CHANNEL WALL/LINING SHALL SLOPE TOWARD ℄ CHANNEL AT 2% MINIMUM.
4. CROSS SECTIONS ARE DRAWN LOOKING UPSTREAM.

THIS PLAN ACCURATE FOR DRAINAGE WORK ONLY

Dist	COUNTY	ROUTE	POST MILES TOTAL PROJECT	SHEET No.	TOTAL SHEETS
12	Ora	22,405, 605	R0.3/R0.9, 22.3/24.0,3.0/R1.6	443	1929

8/10/09
REGISTERED CIVIL ENGINEER — DATE

REGISTERED PROFESSIONAL ENGINEER
MICHAEL A. WISE
No. C70400
Exp. 9-30-10
CIVIL
STATE OF CALIFORNIA

2-1-10
PLANS APPROVAL DATE

THE STATE OF CALIFORNIA OR ITS OFFICERS OR AGENTS SHALL NOT BE RESPONSIBLE FOR THE ACCURACY OR COMPLETENESS OF ELECTRONIC COPIES OF THIS PLAN SHEET.

AECOM
999 TOWN & COUNTRY RD
ORANGE, CA 92868

ORANGE COUNTY
TRANSPORTATION AUTHORITY
550 S. MAIN STREET
ORANGE, CA 92863-1584

DRAINAGE SYSTEM 21
DRAINAGE DETAILS

SCALE AS SHOWN

DD-45

REVISED BY	DATE REVISED
MW	8/10/09

CALCULATED-DESIGNED BY: DANIEL HE
CHECKED BY: MIKE WISE
CONSULTANT FUNCTIONAL SUPERVISOR: ANDRZEJ NOWAK
STATE OF CALIFORNIA - DEPARTMENT OF TRANSPORTATION
Caltrans

LAST REVISION | DATE PLOTTED => 03-FEB-2010
08-10-09 | TIME PLOTTED => 10:34

BORDER LAST REVISED 3/1/2007 | RELATIVE BORDER SCALE IS IN INCHES 0 1 2 3 | USERNAME => trcarol | DGN FILE => c07163ic045.dgn | CU 12235 | EA 071631

Dist	COUNTY	ROUTE	POST MILES TOTAL PROJECT	SHEET No.	TOTAL SHEETS
12	Ora	22,405, 605	R0.3/R0.9, 22.3/24.0,3.0/R1.6	444	1929

REGISTERED CIVIL ENGINEER 8/10/09 DATE

2-1-10
PLANS APPROVAL DATE

REGISTERED PROFESSIONAL ENGINEER MICHAEL A. WISE No. C70400 Exp. 9-30-10 CIVIL STATE OF CALIFORNIA

THE STATE OF CALIFORNIA OR ITS OFFICERS OR AGENTS SHALL NOT BE RESPONSIBLE FOR THE ACCURACY OR COMPLETENESS OF ELECTRONIC COPIES OF THIS PLAN SHEET.

AECOM
999 TOWN & COUNTRY RD
ORANGE, CA 92868

ORANGE COUNTY
TRANSPORTATION AUTHORITY
550 S. MAIN STREET
ORANGE, CA 92863-1584

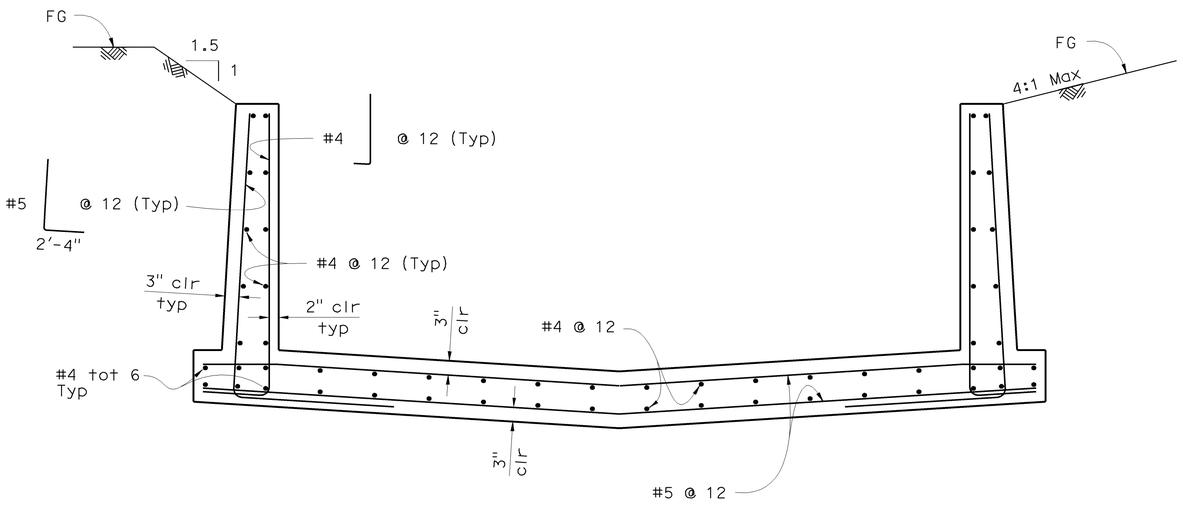

BIXBY CHANNEL TYPICAL REINFORCEMENT - SECTIONS A-A, B-B & C-C

SCALE: 3/4" = 1'-0"

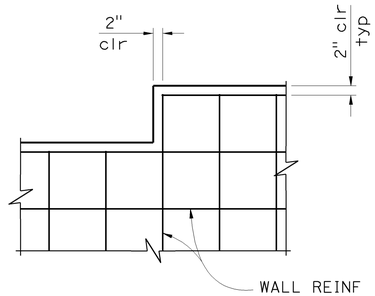

DETAIL X

SCALE: 3/4" = 1'-0"

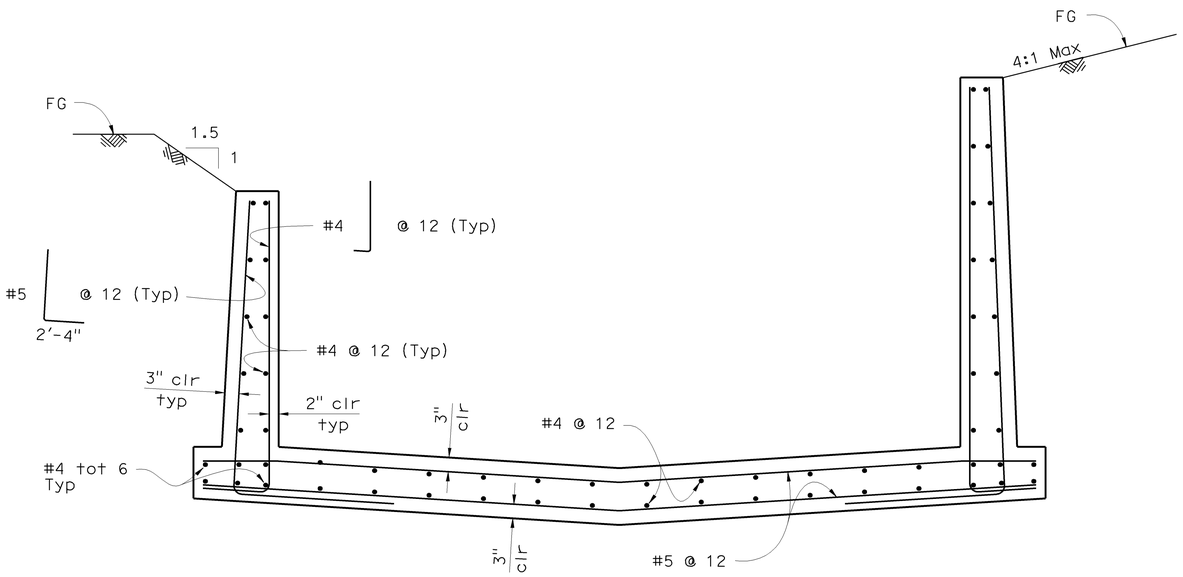

BIXBY CHANNEL TYPICAL REINFORCEMENT - SECTION D-D

SCALE: 3/4" = 1'-0"

NOTE:

1. ALL EXPOSED CONCRETE EDGES SHALL BE CHAMFERED 3/4", EXCEPT CHANNEL FACE SHALL BE CHAMFERED 1/2".

DRAINAGE SYSTEM 21
DRAINAGE DETAILS

SCALE AS SHOWN

DD-46

THIS PLAN ACCURATE FOR DRAINAGE WORK ONLY

STATE OF CALIFORNIA - DEPARTMENT OF TRANSPORTATION
Caltrans

CONSULTANT FUNCTIONAL SUPERVISOR: ANDRZEJ NOWAK
CALCULATED-DESIGNED BY: DANIEL HE
CHECKED BY: MIKE WISE
REVISED BY: MW
DATE REVISED: 8/10/09

LAST REVISION 08-10-09
DATE PLOTTED => 03-FEB-2010
TIME PLOTTED => 10:34

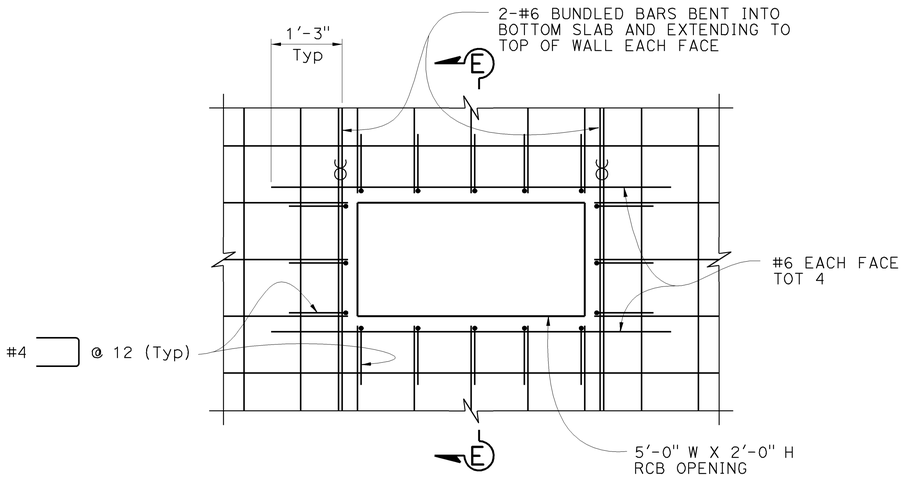

BIXBY CHANNEL RCB OPENING DETAIL

SCALE: 3/4" = 1'-0"

NOTE: 5' X 2' OPENING SHOWN, 2' X 2' OPENING SIMILAR

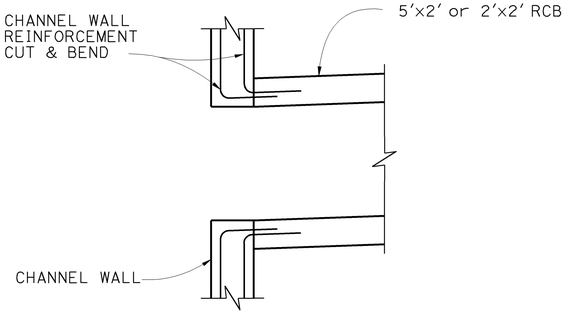

SECTION E-E

SCALE: 3/4" = 1'-0"

NOTE: NOT ALL REINFORCEMENT SHOWN FOR CLARITY.

Dist	COUNTY	ROUTE	POST MILES TOTAL PROJECT	SHEET No.	TOTAL SHEETS
12	Ora	22,405, 605	R0.3/R0.9, 22.3/24.0,3.0/R1.6	445	1929

REGISTERED CIVIL ENGINEER — 8/10/09 DATE

MICHAEL A. WISE No. C70400 Exp. 9-30-10 CIVIL — REGISTERED PROFESSIONAL ENGINEER — STATE OF CALIFORNIA

2-1-10
PLANS APPROVAL DATE

THE STATE OF CALIFORNIA OR ITS OFFICERS OR AGENTS SHALL NOT BE RESPONSIBLE FOR THE ACCURACY OR COMPLETENESS OF ELECTRONIC COPIES OF THIS PLAN SHEET.

AECOM
999 TOWN & COUNTRY RD
ORANGE, CA 92868

ORANGE COUNTY TRANSPORTATION AUTHORITY
550 S. MAIN STREET
ORANGE, CA 92863-1584

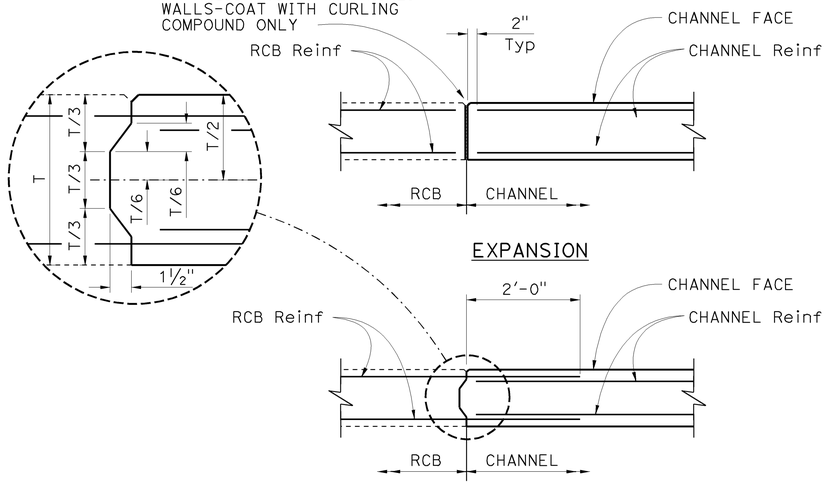

TRANSVERSE JOINT DETAILS

SCALE: 3/4" = 1'-0"

NOTES:

1. Expansion joints shall be used for R.C. channel at intervals not less than 10' or more than 50' unless otherwise noted.
2. All joints shall be in the same plane for the entire structure and on the radial for curved sections. No staggering of joints will be permitted.
3. Joint finish for channel face shall be chafered ½" on walls and decks and rounded with edger tool on invert.

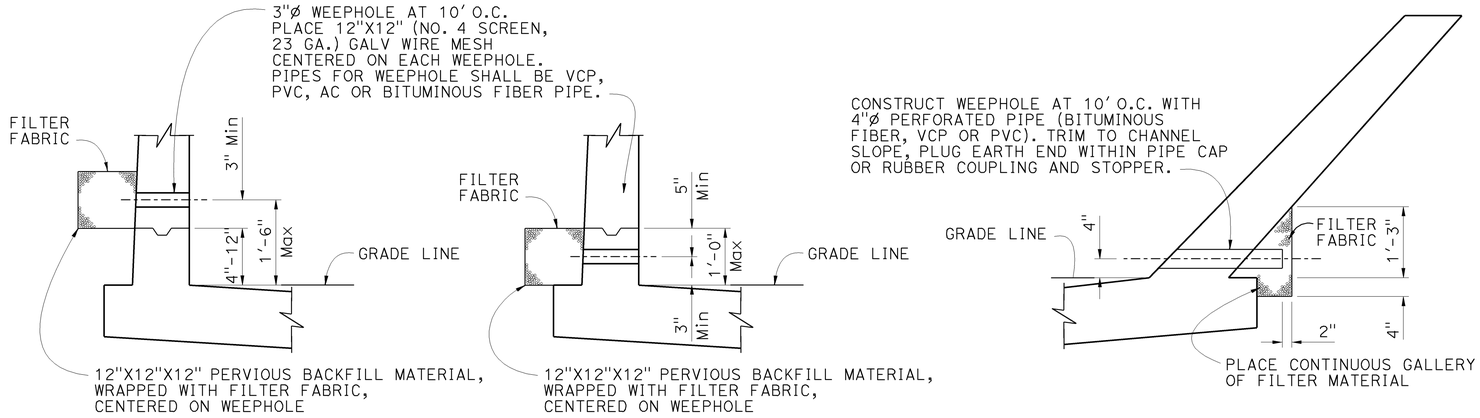

CHANNEL WEEPHOLES

SCALE: 3/4" = 1'-0"

LEGEND:

(n) DENOTES DRAINAGE SYSTEM

DRAINAGE SYSTEM 21
DRAINAGE DETAILS

SCALE AS SHOWN

DD-47

THIS PLAN ACCURATE FOR DRAINAGE WORK ONLY

CALCULATED-DESIGNED BY	CHECKED BY	REVISED BY	DATE REVISED
DANIEL HE	MIKE WISE	MW	8/10/09

CONSULTANT FUNCTIONAL SUPERVISOR: ANDRZEJ NOWAK

STATE OF CALIFORNIA - DEPARTMENT OF TRANSPORTATION

Caltrans

LAST REVISION | DATE PLOTTED => 03-FEB-2010
08-10-09 | TIME PLOTTED => 10:34

BORDER LAST REVISED 3/1/2007

RELATIVE BORDER SCALE IS IN INCHES 0 1 2 3

USERNAME => trcarol
DGN FILE => c07163ic047.dgn

CU 12235

EA 071631

Dist	COUNTY	ROUTE	POST MILES TOTAL PROJECT	SHEET No.	TOTAL SHEETS
12	Ora	22,405, 605	R0.3/R0.9, 22.3/24.0,3.0/R1.6	446	1929

REGISTERED CIVIL ENGINEER — 8/10/09 DATE

2-1-10
PLANS APPROVAL DATE

REGISTERED PROFESSIONAL ENGINEER — MICHAEL A. WISE — No. C70400 — Exp. 9-30-10 — CIVIL — STATE OF CALIFORNIA

THE STATE OF CALIFORNIA OR ITS OFFICERS OR AGENTS SHALL NOT BE RESPONSIBLE FOR THE ACCURACY OR COMPLETENESS OF ELECTRONIC COPIES OF THIS PLAN SHEET.

AECOM
999 TOWN & COUNTRY RD
ORANGE, CA 92868

ORANGE COUNTY
TRANSPORTATION AUTHORITY
550 S. MAIN STREET
ORANGE, CA 92863-1584

NOTES:

1. JUNCTION STRUCTURE TYPE V MAY BE USED WHEN B = 96" OR LESS, ANGLE A = 30° OR MORE, CHANNEL WIDTH IS 20'-0" OR LESS.
2. VALUE OF B, C, ANGLE A, ELEVATION S, ELEVATION R AND STATION POINTS ARE AS SHOWN ON THE PLANS.
3. ALL STEEL REINFORCEMENT SHALL BE 1½" CLEAR UNLESS OTHERWISE NOTED.
4. FOR PIPE SIZES, SEE TABLE.
5. W BARS ARE OF SIZE AND SPACING SPECIFIED FOR WALL STEEL ON PLAN, AND SHALL BE CUT IN CENTER OF OPENING AND BENT INTO TOP AND BOTTOM OF JUNCTION STRUCTURE.
6. FLOOR OF JUNCTION STRUCTURE SHALL BE STEEL TROWELED TO SPRINGLINE.
7. RADIUS VARIES FROM 3" AT ANGLE A = 90° TO RADIUS = B (36" MAX) WHEN ANGLE A = 45° OR LESS.
8. BACKFILL UNDER STRUCTURE WITH SLURRY CONTAINING 1½ SACKS P.C./C.Y. BACKFILL MAY BE OMITTED IF STRUCTURE IS LAID ON UNDISTURBED EARTH TO STORM DRAIN WALL.
9. THE FLOWLINE OF ALL ENTRIES SHALL BE MADE IN THE LOWER 1/3 OF THE STRUCTURE.

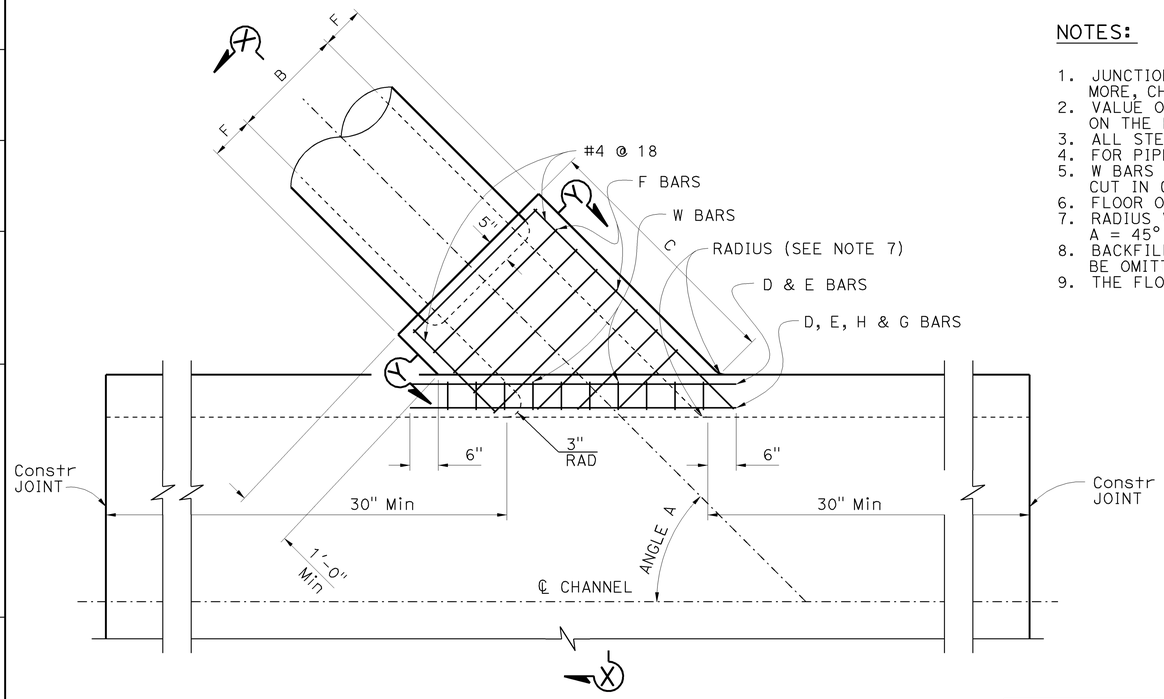

PLAN - JUNCTION STRUCTURE

SCALE: ¾" = 1'-0"

B	F	D, E, H and D Bars	F Bars
24"	6"	#5	#4 @ 6
48"	8"	#6	#5 @ 6

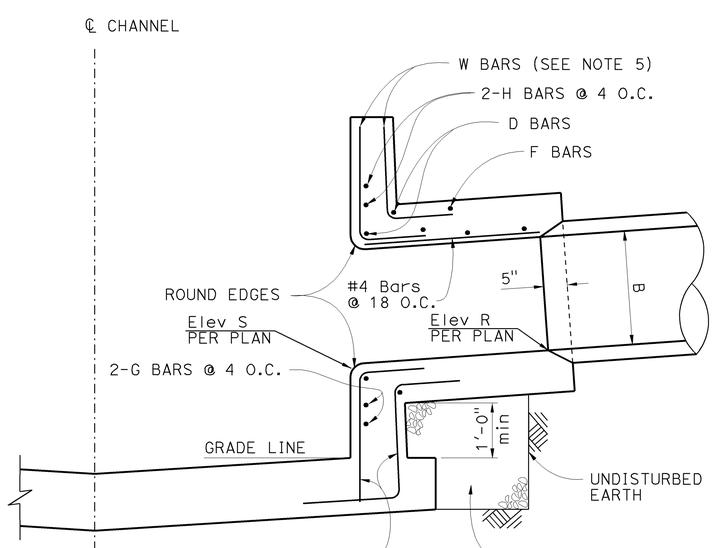

SECTION X-X
SCALE: ¾" = 1'-0"

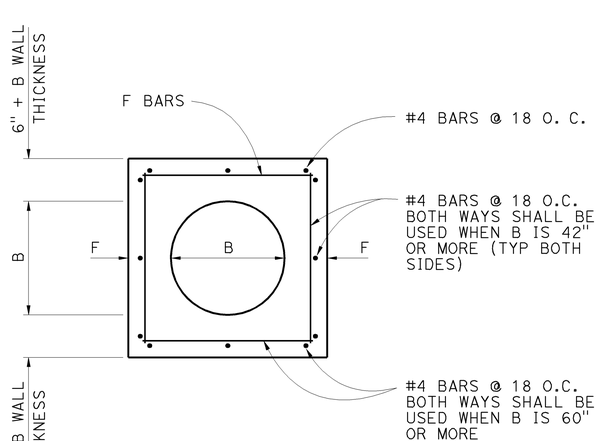

SECTION Y-Y
SCALE: ¾" = 1'-0"

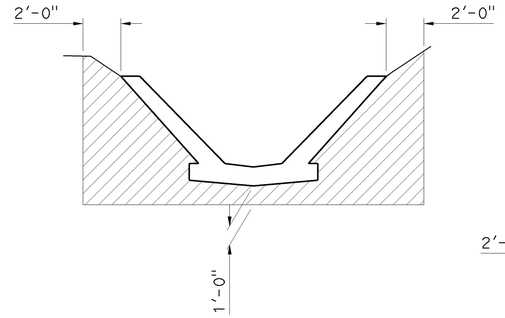

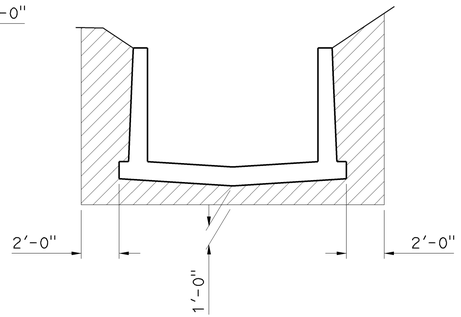

EXCAVATION LIMITS

SCALE: ¼" = 1'-0"

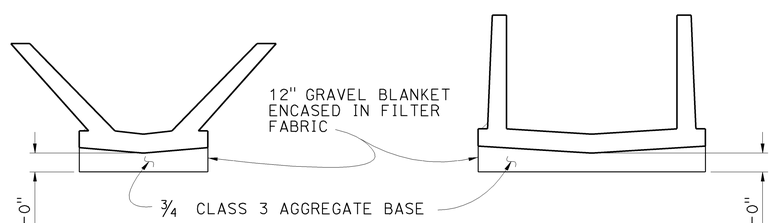

ROCK BLANKET DETAIL

¼" = 1'-0"

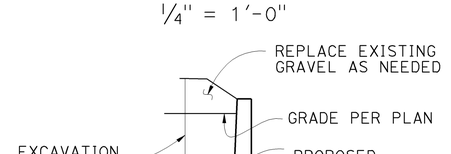

MAINTENANCE ROAD FILL

SCALE: ¼" = 1'-0"

THIS PLAN ACCURATE FOR DRAINAGE WORK ONLY

DRAINAGE SYSTEM 21
DRAINAGE DETAILS

SCALE AS SHOWN

DD-48

REVISED BY	DATE REVISED
MW	8/10/09

DANIEL HE — CALCULATED-DESIGNED BY
MIKE WISE — CHECKED BY

CONSULTANT FUNCTIONAL SUPERVISOR: ANDRZEJ NOWAK

STATE OF CALIFORNIA - DEPARTMENT OF TRANSPORTATION
Caltrans

LAST REVISION DATE PLOTTED => 03-FEB-2010
08-10-09 TIME PLOTTED => 10:35

BORDER LAST REVISED 3/1/2007 — RELATIVE BORDER SCALE IS IN INCHES 0 1 2 3 — USERNAME => trcarol — DGN FILE => c071631c048.dgn — CU 12235 — EA 071631

Dist	COUNTY	ROUTE	POST MILES TOTAL PROJECT	SHEET No.	TOTAL SHEETS
12	Ora	22,405, 605	R0.3/R0.9, 22.3/24.0,3.0/R1.6	447	1929

4/06/09
REGISTERED CIVIL ENGINEER DATE

MICHAEL A. WISE
No. C70400
Exp. 09/30/10
CIVIL
REGISTERED PROFESSIONAL ENGINEER
STATE OF CALIFORNIA

2-1-10
PLANS APPROVAL DATE

THE STATE OF CALIFORNIA OR ITS OFFICERS OR AGENTS SHALL NOT BE RESPONSIBLE FOR THE ACCURACY OR COMPLETENESS OF ELECTRONIC COPIES OF THIS PLAN SHEET.

AECOM
999 TOWN & COUNTRY RD
ORANGE, CA 92868

ORANGE COUNTY
TRANSPORTATION AUTHORITY
550 S. MAIN STREET
ORANGE, CA 92863-1584

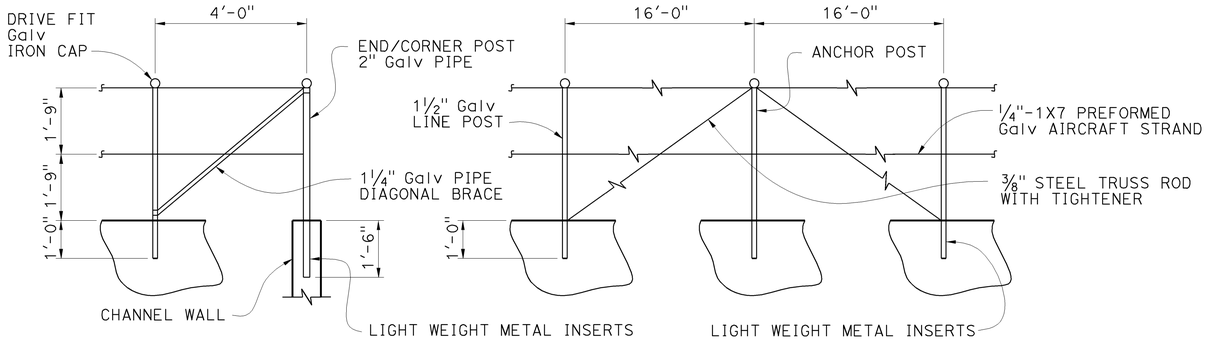

GUARD CABLE FENCE - CHANNEL WALL ELEVATION

SCALE ½" = 1'-0"

NOTES:

1. GROUND SHALL BE GRADED BEFORE FENCE CONSTRUCTION BEGINS. LOCALIZED GROUND DEPRESSIONS REMAINING THAT ARE MORE THAN 3 INCHES DEEP SHALL BE ELIMINATED BY PROPERLY PLACING COMPCTED FILL.
2. ALL METAL PARTS OF FENCE AND GATES SHALL BE GALVANIZED NEW MATERIAL, AND ALL POST SHALL BE FITTED WITH DRIVE-FIT CAPS.
3. LIGHTWEIGHT METAL INSERT SHALL BE SHEET METAL TUBE WITH I.D. ¾" GREATER THAN POST O.D. GROUT POST WITH NEAT GROUT OF ONE PART CEMENT TO TWO PARTS OF WATER OR, IF APPROVED BY THE ENGINEER, WITH SULFUR.
4. THE FENCING ON BRIDGES, HEADWALLS AND WINGWALLS SHALL BE INSTALLED IN SUCH A MANNER THAT THERE ARE NO OPENINGS OR GAPS WHICH IN THE OPINION OF THE ENGINEER COULD BE HAZARDOUS.
5. UNLESS OTHERWISE DIRECTED, CONSTRUCT FENCE WITH CABLE 0.2' INSIDE R/W LINE. AT R/W MONUMENTS, STRADDLE MONUMENT WITH POST SET 2.5' AWAY FROM MONUMENT.
6. CABLES SHALL BE STRETCHED AND FASTENED WITH 2 CABLE CLAMPS AT EACH ANCHOR POST AT 16 FEET ON CENTER. NUTS SHALL BE WELDED TO CLAMPS OR COVERED WITH AN EPOXY PUTTY (J.B. WELD OR EQUAL) TO PREVENT REMOVAL.
7. ANCHOR POSTS SHALL GUYED WITH ⅜" STEEL TRUSS RODS AS SHOWN.
8. PIPE FOR FENCE SHALL CONFORM TO ASTM A-120. GALVANIZING SHALL COMPLY WITH

Lateral Support	Lateral Connection
43+40± Lt	
41+50± Lt	
38+70± Lt	
37+30± Rt	
36+60± Rt	
	34+40± Rt
	34+40± Rt
33+45± Rt	
28+45± Rt	
27+75± Rt	
27+75± Rt	
27+10± Rt	
27+10± Rt	
25+30± Rt	
	21+45± Rt
21+40± Rt	
21+00± Rt	
20+70± Rt	
20+10± Rt	
20+10± Rt	
12+50± Rt	

THIS PLAN ACCURATE FOR DRAINAGE WORK ONLY

DRAINAGE SYSTEM 21
DRAINAGE DETAILS

SCALE ½" = 1'-0"

DD-49

LAST REVISION DATE PLOTTED => 03-FEB-2010
08-10-09 TIME PLOTTED => 10:35

REVISED BY | DATE REVISED
DANIEL HE | MIKE WISE
CALCULATED-DESIGNED BY | CHECKED BY
CONSULTANT FUNCTIONAL SUPERVISOR: ANDRZEJ NOWAK
STATE OF CALIFORNIA - DEPARTMENT OF TRANSPORTATION
Caltrans

BORDER LAST REVISED 3/1/2007

RELATIVE BORDER SCALE IS IN INCHES 0 1 2 3

USERNAME => trcarol
DGN FILE => c07163ic049.dgn

CU 12235

EA 071631

Dist	COUNTY	ROUTE	POST MILES TOTAL PROJECT	SHEET No.	TOTAL SHEETS
12	Ora	22,405, 605	R0.3/R0.9, 22.3/24.0,3.0/R1.6	448	1929

REGISTERED CIVIL ENGINEER 8/10/09 DATE

2-1-10
PLANS APPROVAL DATE

REGISTERED PROFESSIONAL ENGINEER VINH TRINH No. C 50685 Exp. 09-30-09 CIVIL STATE OF CALIFORNIA

THE STATE OF CALIFORNIA OR ITS OFFICERS OR AGENTS SHALL NOT BE RESPONSIBLE FOR THE ACCURACY OR COMPLETENESS OF ELECTRONIC COPIES OF THIS PLAN SHEET.

WKE, INC.
400 N. TUSTIN AVE
SUITE 285
SANTA ANA, CA 92705

ORANGE COUNTY
TRANSPORTATION AUTHORITY
550 S. MAIN STREET
ORANGE, CA 92863-1584

NOTES:

1. FOR DESIGN, GENERAL, AND CONSTRUCTION NOTES, SEE STANDARD PLAN D82
2. FOR BIXBY CHANNEL RCB PROFILE AND CURVE DATA, SEE SHEET DD-40.

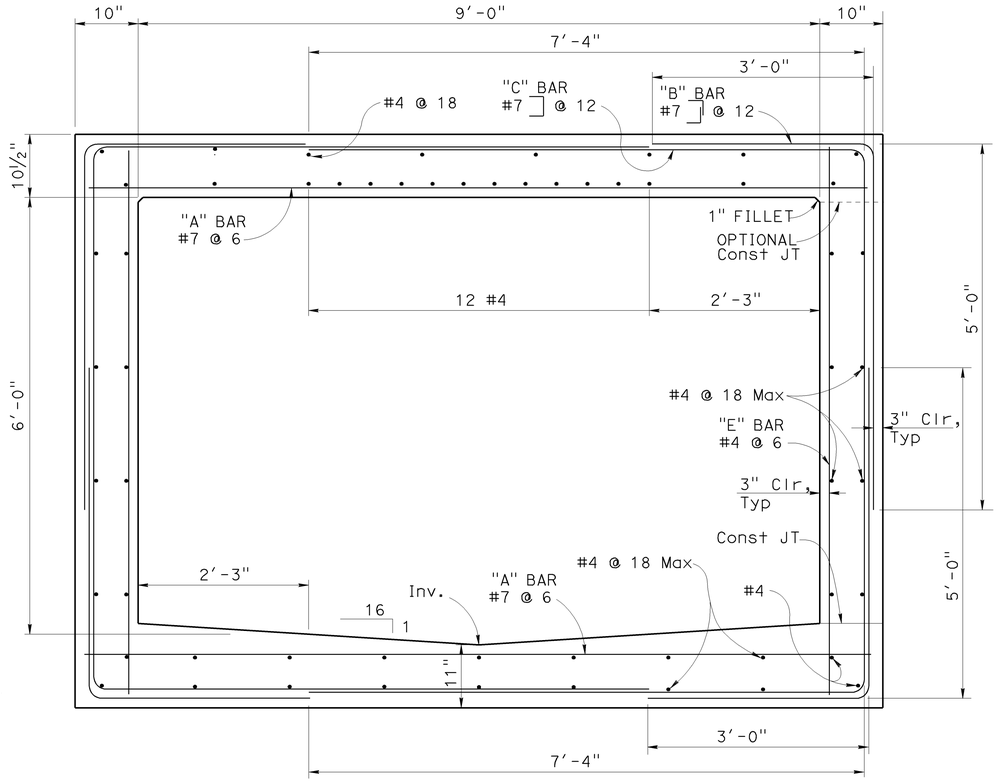

BIXBY CHANNEL RCB SECTION

SCALE: 1" = 1'-0"

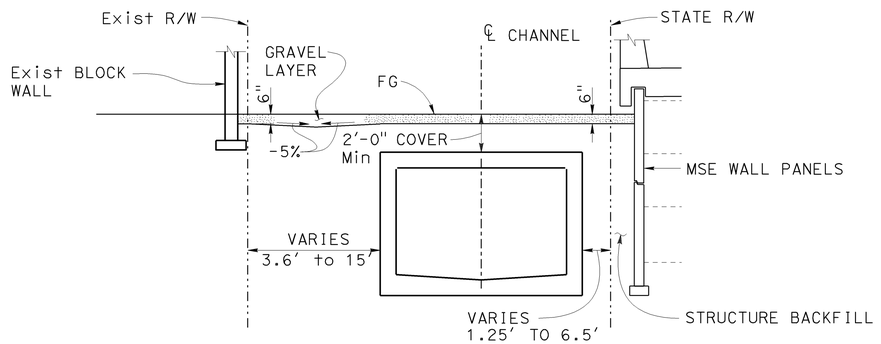

* TYPICAL SECTION LOOKING UPSTREAM

TYPICAL SECTION

SCALE: 1/4 " = 1'-0"

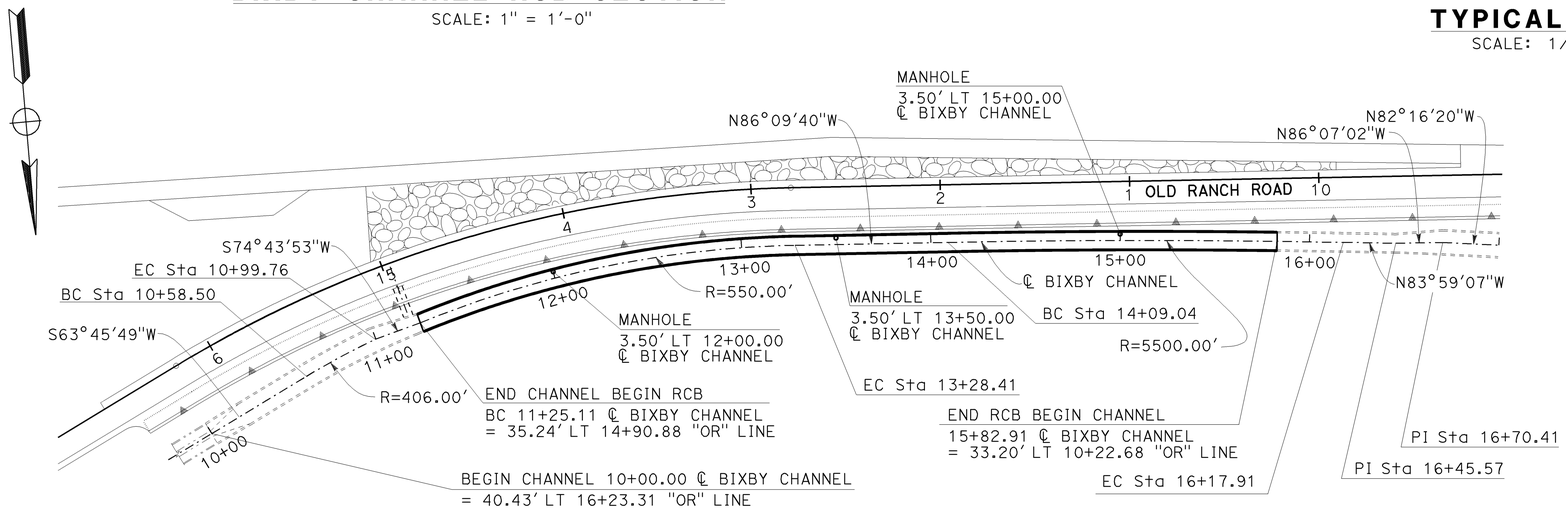

BIXBY CHANNEL RCB PLAN

SCALE: 1" = 40'-0"

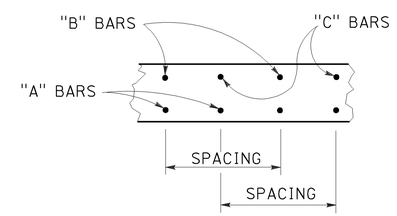

ROOF AND INVERT SECTION

NO SCALE

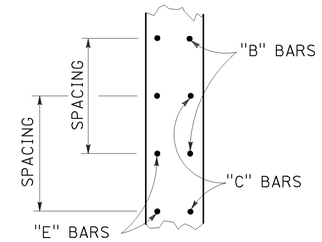

WALL SECTION

NO SCALE

DRAINAGE SYSTEM 21
DRAINAGE DETAILS

NO SCALE

THIS PLAN ACCURATE FOR DRAINAGE WORK ONLY

DD-50

STATE OF CALIFORNIA - DEPARTMENT OF TRANSPORTATION
Caltrans

CONSULTANT FUNCTIONAL SUPERVISOR: WEI KOO
CALCULATED-DESIGNED BY: V. TRINH
CHECKED BY: D. WEDDELL
REVISED BY: V. TRINH
DATE REVISED: 8/10/09

LAST REVISION 04-06-09
DATE PLOTTED => 03-FEB-2010
TIME PLOTTED => 10:35

Dist	COUNTY	ROUTE	POST MILES TOTAL PROJECT	SHEET No.	TOTAL SHEETS
12	Ora	22,405, 605	R0.3/R0.9, 22.3/24.0,3.0/R1.6	449	1929

REGISTERED CIVIL ENGINEER — 8/10/09 DATE

2-1-10
PLANS APPROVAL DATE

REGISTERED PROFESSIONAL ENGINEER — VINH TRINH No. C 50685 Exp. 09-30-09 CIVIL — STATE OF CALIFORNIA

THE STATE OF CALIFORNIA OR ITS OFFICERS OR AGENTS SHALL NOT BE RESPONSIBLE FOR THE ACCURACY OR COMPLETENESS OF ELECTRONIC COPIES OF THIS PLAN SHEET.

WKE, INC.
400 N. TUSTIN AVE
SUITE 285
SANTA ANA, CA 92705

ORANGE COUNTY
TRANSPORTATION AUTHORITY
550 S. MAIN STREET
ORANGE, CA 92863-1584

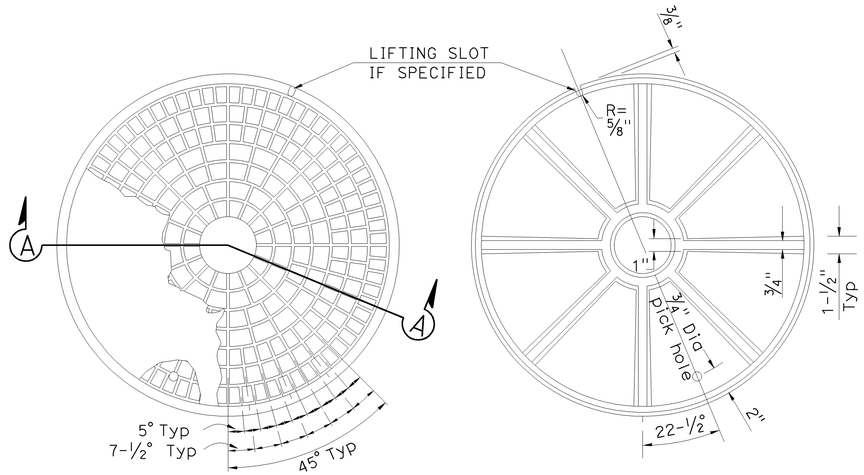

MANHOLE COVER
NO SCALE

BOTTOM OF COVER
NO SCALE

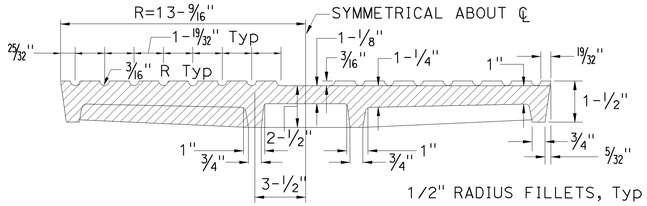

SECTION A-A
NO SCALE

NOTES:

1. MANHOLE COVERS SHALL BE CAST WITH THE LETTER "D" AND THE AGENCY IDENTIFICATION IN ACCORDANCE WITH INSTRUCTIONS FURNISHED BY THE AGENCY. THE LETTER "D" SHALL BE 2-1/2" HIGH WITH 1/2" LINE WIDTH, AND PLACED IN THE CENTER OF THE COVER. ALL LETTERS SHALL BE FLUSH WITH THE FINISHED SURFACE OF THE COVER.
2. FOUNDRY IDENTIFYING MARK, HEAT AND DATE SHALL BE CAST ON THE BOTTOM OF THE COVER AND ON THE INSIDE OF THE FRAME.
3. WEIGHT OF THE MANHOLE FRAME SHALL BE 260 LBS AND WEIGHT OF THE MANHOLE COVER SHALL BE 175 LBS. ACTUAL WEIGHTS SHALL BE WITHIN A RANGE OF 95% TO 110%.
4. MANHOLE COVERS SHALL BE PROVIDED WITH SOCKET-SET SCREW LOCKING DEVICES. DRILL AND TAP TWO HOLES TO A DEPTH OF ONE INCH AT 90 DEGREES TO PICK HOLE AND INSTALL 3/4" X 3/4" STAINLESS STEEL SOCKET-SET SCREWS WITH 3/8" RECESSED HEX HEAD.
5. ALL CONSTRUCTION JOINTS SHALL BE IN THE SAME PLANE FOR THE ENTIRE STRUCTURE AND ON THE RADIAL FOR CURVED SECTIONS. NO STAGGERING OF CONSTRUCTION JOINTS WILL BE PERMITTED.
6. CONSTRUCTION JOINTS SHALL BE USED FOR RCB CULVERT AT INTERVALS NOT LESS THAN 10'-0" OR MORE THAN 30'-0" UNLESS OTHERWISE NOTED.
7. JOINT FINISH FOR CHANNEL FACE SHALL BE CHAMFERED 1/2" ON WALLS AND DECKS AND ROUNDED WITH EDGER TOOL ON INVERT.

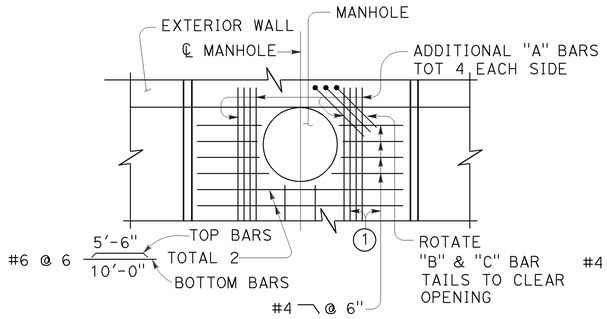

PART PLAN

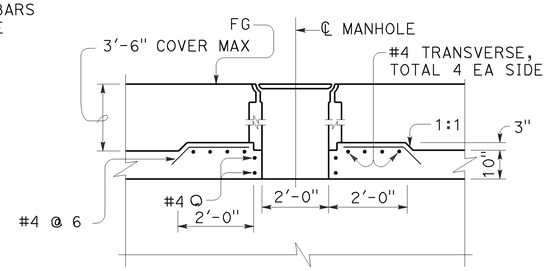

PART LONGITUDINAL SECTION

① ADJACENT TO EACH SIDE OF THE OPENING, PLACE ADDITIONAL BARS EQUIVALENT TO HALF THE INTERRUPTED "B" AND "C" BARS.

MANHOLE
SCALE: 1/2" = 1'-0"

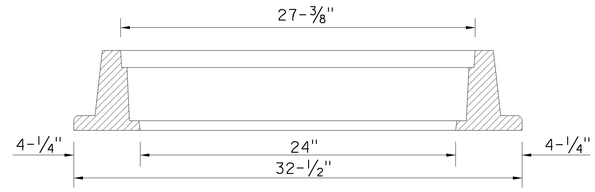

SECTION THRU FRAME
NO SCALE

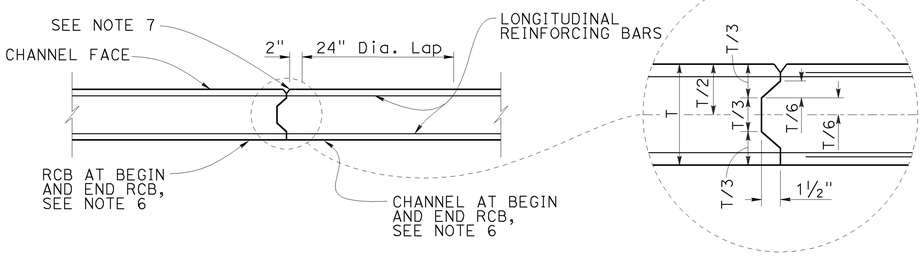

CONSTRUCTION JOINT
NO SCALE

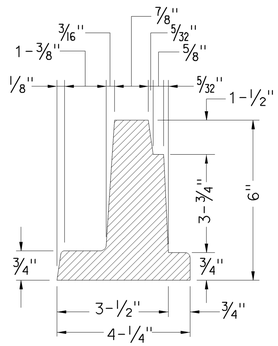

DETAIL OF FRAME
NO SCALE

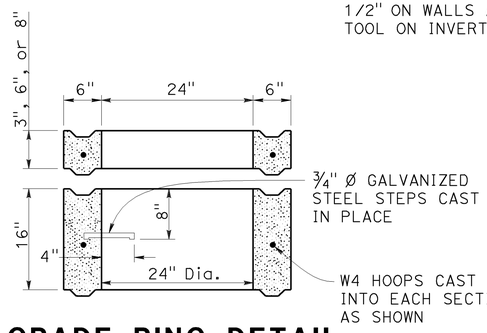

GRADE RING DETAIL
NO SCALE

DRAINAGE SYSTEM 21
DRAINAGE DETAILS
NO SCALE

DD-51

CALCULATED-DESIGNED BY	V. TRINH		
CHECKED BY	D. WEDDELL		
REVISED BY	V. TRINH		
DATE REVISED	8/10/09		
CONSULTANT FUNCTIONAL SUPERVISOR	WEI KOO		

STATE OF CALIFORNIA - DEPARTMENT OF TRANSPORTATION — Caltrans

LAST REVISION DATE PLOTTED => 03-FEB-2010
04-06-09 TIME PLOTTED => 10:35

BORDER LAST REVISED 8/1/2008 | RELATIVE BORDER SCALE IS IN INCHES 0 1 2 3 | USERNAME => trcarol DGN FILE => c07163ic051.dgn | CU 12235 | EA 071631

Dist	COUNTY	ROUTE	POST MILES TOTAL PROJECT	SHEET No.	TOTAL SHEETS
12	Ora	22,405, 605	R0.3/R0.9, 22.3/24.0,3.0/R1.6	450	1929

REGISTERED CIVIL ENGINEER — 08/10/09 DATE

ANDREW V. KORKOS No. GE 2357 Exp. 03/31/10 GEOTECHNICAL — REGISTERED PROFESSIONAL ENGINEER — STATE OF CALIFORNIA

2-1-10
PLANS APPROVAL DATE

THE STATE OF CALIFORNIA OR ITS OFFICERS OR AGENTS SHALL NOT BE RESPONSIBLE FOR THE ACCURACY OR COMPLETENESS OF ELECTRONIC COPIES OF THIS PLAN SHEET.

EARTH MECHANICS, INC.
17660 NEWHOPE ST. SUITE E
FOUNTAIN VALLEY, CA 92708

OCTA
550 S. MAIN STREET
ORANGE, CA 92863-1584

REFERENCE:

CALTRANS SOIL & ROCK LOGGING, CLASSIFICATION, AND PRESENTATION MANUAL (JUNE 2007)

CEMENTATION

Description	Criteria
Weak	Crumbles or breaks with handling or little finger pressure.
Moderate	Crumbles or breaks with considerable finger pressure.
Strong	Will not crumble or break with finger pressure.

CONSISTENCY OF COHESIVE SOILS

Description	Unconfined Compressive Strength (tsf)	Pocket Penetrometer Measurement (tsf)	Torvane Measurement (tsf)	Field Approximation
Very Soft	< 0.25	< 0.25	< 0.12	Easily penetrated several inches by fist
Soft	0.25 to 0.50	0.25 to 0.50	0.12 to 0.25	Easily penetrated several inches by thumb
Medium Stiff	0.50 to 1.0	0.50 to 1.0	0.25 to 0.50	Penetrated several inches by thumb with moderate effort
Stiff	1 to 2	1 to 2	0.50 to 1.0	Readily indented by thumb but penetrated only with great effort
Very Stiff	2 to 4	2 to 4	1.0 to 2.0	Readily indented by thumbnail
Hard	> 4.0	> 4.0	> 2.0	Indented by thumbnail with difficulty

BOREHOLE IDENTIFICATION

Symbol	Hole Type	Description
Size	A	Auger Boring
Size	R P	Rotary drilled boring Rotary percussion boring (air)
Size	R	Rotary drilled diamond core
Size	HD HA	Hand driven (1-inch soil tube) Hand Auger
	D	Dynamic Cone Penetration Boring
	CPT	Cone Penetration Test (ASTM D 5778-95)
	O	Other

Note: Size in inches.

PLASTICITY OF FINE-GRAINED SOILS

Description	Criteria
Nonplastic	A 1/8-inch thread cannot be rolled at any water content.
Low	The thread can barely be rolled and the lump cannot be formed when drier than the plastic limit.
Medium	The thread is easy to roll and not much time is required to reach the plastic limit. The thread cannot be rerolled after reaching the plastic limit. The lump crumbles when drier than the plastic limit.
High	It takes considerable time rolling and kneading to reach the plastic limit. The thread can be rerolled several times after reaching the plastic limit. The lump can be formed without crumbling when drier than the plastic limit.

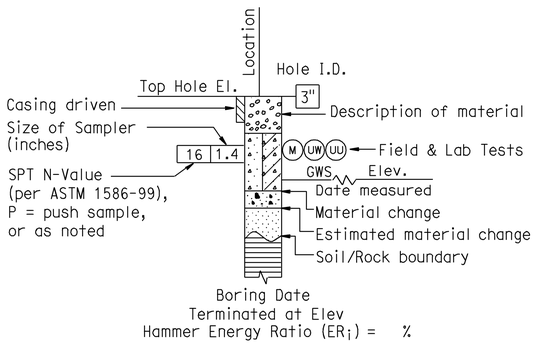

ROTARY BORING

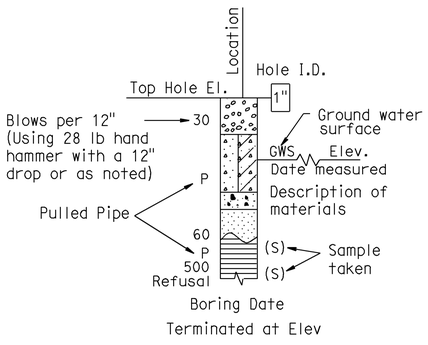

HAND BORING

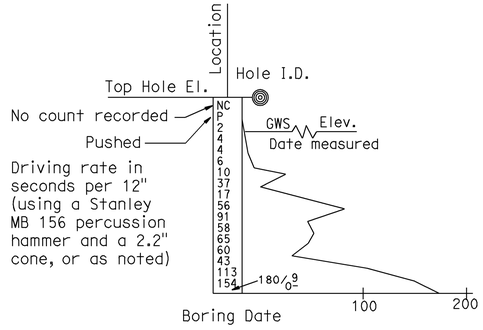

DYNAMIC CONE PENETRATION BORING

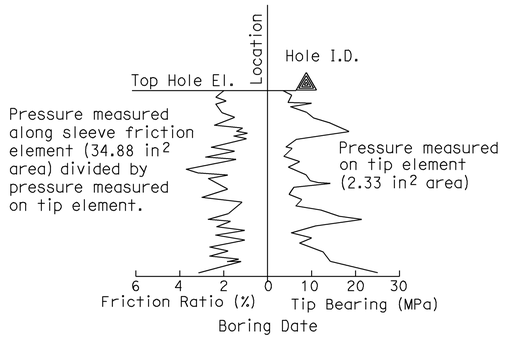

CONE PENETRATION TEST (CPT) SOUNDING

LOG OF TEST BORINGS NO. 1
BIXBY CHANNEL

SCALE AS SHOWN

DD-52

LAST REVISION DATE PLOTTED => 03-FEB-2010
TIME PLOTTED => 10:35
08-10-09

STATE OF CALIFORNIA - DEPARTMENT OF TRANSPORTATION
CONSULTANT FUNCTIONAL SUPERVISOR: K.ARULMOLI
CALCULATED-DESIGNED BY: J.FANG
CHECKED BY: G.J.GUNARANJAN
REVISED BY: K.P
DATE REVISED: 08/10/09

BORDER LAST REVISED 8/1/2008

RELATIVE BORDER SCALE IS IN INCHES 0 1 2 3

USERNAME => trcarol
DGN FILE => c07163ic052.dgn

CU 12235

EA 071631

REFERENCE: CALTRANS SOIL & ROCK LOGGING, CLASSIFICATION, AND PRESENTATION MANUAL (JUNE 2007)

GROUP SYMBOLS AND NAMES

Graphic/Symbol	Group Names	Graphic/Symbol	Group Names
GW	Well-graded GRAVEL Well-graded GRAVEL with SAND	CL	Lean CLAY Lean CLAY with SAND Lean CLAY with GRAVEL SANDY lean CLAY SANDY lean CLAY with GRAVEL GRAVELLY lean CLAY GRAVELLY lean CLAY with SAND
GP	Poorly graded GRAVEL Poorly graded GRAVEL with SAND		
GW-GM	Well-graded GRAVEL with SILT Well-graded GRAVEL with SILT and SAND	CL-ML	SILTY CLAY SILTY CLAY with SAND SILTY CLAY with GRAVEL SANDY SILTY CLAY SANDY SILTY CLAY with GRAVEL GRAVELLY SILTY CLAY GRAVELLY SILTY CLAY with SAND
GW-GC	Well-graded GRAVEL with CLAY (or SILTY CLAY) Well-graded GRAVEL with CLAY and SAND (or SILTY CLAY and SAND)		
GP-GM	Poorly graded GRAVEL with SILT Poorly graded GRAVEL with SILT and SAND	ML	SILT SILT with SAND SILT with GRAVEL SANDY SILT SANDY SILT with GRAVEL GRAVELLY SILT GRAVELLY SILT with SAND
GP-GC	Poorly graded GRAVEL with CLAY (or SILTY CLAY) Poorly graded GRAVEL with CLAY and SAND (or SILTY CLAY and SAND)		
GM	SILTY GRAVEL SILTY GRAVEL with SAND	OL	ORGANIC lean CLAY ORGANIC lean CLAY with SAND ORGANIC lean CLAY with GRAVEL SANDY ORGANIC lean CLAY SANDY ORGANIC lean CLAY with GRAVEL GRAVELLY ORGANIC lean CLAY GRAVELLY ORGANIC lean CLAY with SAND
GC	CLAYEY GRAVEL CLAYEY GRAVEL with SAND		
GC-GM	SILTY, CLAYEY GRAVEL SILTY, CLAYEY GRAVEL with SAND	OL	ORGANIC SILT ORGANIC SILT with SAND ORGANIC SILT with GRAVEL SANDY ORGANIC SILT SANDY ORGANIC SILT with GRAVEL GRAVELLY ORGANIC SILT GRAVELLY ORGANIC SILT with SAND
SW	Well-graded SAND Well-graded SAND with GRAVEL		
SP	Poorly graded SAND Poorly graded SAND with GRAVEL	CH	Fat CLAY Fat CLAY with SAND Fat CLAY with GRAVEL SANDY fat CLAY SANDY fat CLAY with GRAVEL GRAVELLY fat CLAY GRAVELLY fat CLAY with SAND
SW-SM	Well-graded SAND with SILT Well-graded SAND with SILT and GRAVEL		
SW-SC	Well-graded SAND with CLAY (or SILTY CLAY) Well-graded SAND with CLAY and GRAVEL (or SILTY CLAY and GRAVEL)	MH	Elastic SILT Elastic SILT with SAND Elastic SILT with GRAVEL SANDY elastic SILT SANDY elastic SILT with GRAVEL GRAVELLY elastic SILT GRAVELLY elastic SILT with SAND
SP-SM	Poorly graded SAND with SILT Poorly graded SAND with SILT and GRAVEL		
SP-SC	Poorly graded SAND with CLAY (or SILTY CLAY) Poorly graded SAND with CLAY and GRAVEL (or SILTY CLAY and GRAVEL)	OH	ORGANIC fat CLAY ORGANIC fat CLAY with SAND ORGANIC fat CLAY with GRAVEL SANDY ORGANIC fat CLAY SANDY ORGANIC fat CLAY with GRAVEL GRAVELLY ORGANIC fat CLAY GRAVELLY ORGANIC fat CLAY with SAND
SM	SILTY SAND SILTY SAND with GRAVEL		
SC	CLAYEY SAND CLAYEY SAND with GRAVEL	OH	ORGANIC elastic SILT ORGANIC elastic SILT with SAND ORGANIC elastic SILT with GRAVEL SANDY ORGANIC elastic SILT SANDY ORGANIC elastic SILT with GRAVEL GRAVELLY ORGANIC elastic SILT GRAVELLY ORGANIC elastic SILT with SAND
SC-SM	SILTY, CLAYEY SAND SILTY, CLAYEY SAND with GRAVEL		
PT	PEAT	OL/OH	ORGANIC SOIL ORGANIC SOIL with SAND ORGANIC SOIL with GRAVEL SANDY ORGANIC SOIL SANDY ORGANIC SOIL with GRAVEL GRAVELLY ORGANIC SOIL GRAVELLY ORGANIC SOIL with SAND
	COBBLES COBBLES and BOULDERS BOULDERS		

FIELD AND LABORATORY TESTING

- (C) Consolidation (ASTM D 2435)
- (CL) Collapse Potential (ASTM D 5333)
- (CP) Compaction Curve (CTM 216)
- (CR) Corrosivity Testing (CTM 643, CTM 422, CTM 417)
- (CU) Consolidated Undrained Triaxial (ASTM D 4767)
- (DS) Direct Shear (ASTM D 3080)
- (EI) Expansion Index (ASTM D 4829)
- (M) Moisture Content (ASTM D 2216)
- (OC) Organic Content-% (ASTM D 2974)
- (P) Permeability (CTM 220)
- (PA) Particle Size Analysis (ASTM D 422)
- (PI) Plasticity Index (AASHTO T 90)
Liquid Limit (AASHTO T 89)
- (PL) Point Load Index (ASTM D 5731)
- (PM) Pressure Meter
- (PP) Pocket Penetrometer
- (R) R-Value (CTM 301)
- (SE) Sand Equivalent (CTM 217)
- (SG) Specific Gravity (AASHTO T 100)
- (SL) Shrinkage Limit (ASTM D 427)
- (SW) Swell Potential (ASTM D 4546)
- (TV) Pocket Torvane
- (UC) Unconfined Compression-Soil (ASTM D 2166)
Unconfined Compression-Rock (ASTM D 2938)
- (UU) Unconsolidated Undrained Triaxial (ASTM D 2850)
- (UW) Unit Weight (ASTM D 4767)
- (VS) Vane Shear (AASHTO T 223)

Dist	COUNTY	ROUTE	POST MILES TOTAL PROJECT	SHEET No.	TOTAL SHEETS
12	Ora	22,405, 605	R0.3/R0.9, 22.3/24.0,3.0/R1.6	451	1929

ANDREW V. KORKOS — 08/10/09
REGISTERED CIVIL ENGINEER — DATE

2-1-10
PLANS APPROVAL DATE

REGISTERED PROFESSIONAL ENGINEER — ANDREW V. KORKOS — No. GE 2357 — Exp. 03/31/10 — GEOTECHNICAL — STATE OF CALIFORNIA

THE STATE OF CALIFORNIA OR ITS OFFICERS OR AGENTS SHALL NOT BE RESPONSIBLE FOR THE ACCURACY OR COMPLETENESS OF ELECTRONIC COPIES OF THIS PLAN SHEET.

EARTH MECHANICS, INC.
17660 NEWHOPE ST. SUITE E
FOUNTAIN VALLEY, CA 92708

OCTA
550 S. MAIN STREET
ORANGE, CA 92863-1584

APPARENT DENSITY OF COHESIONLESS SOILS

Description	SPT N_{60} (Blows / 12 inches)
Very loose	0 - 4
Loose	5 - 10
Medium Dense	11 - 30
Dense	31 - 50
Very Dense	> 50

MOISTURE

Description	Criteria
Dry	Absence of moisture, dusty, dry to the touch
Moist	Damp but no visible water
Wet	Visible free water, usually soil is below water table

PERCENT OR PROPORTION OF SOILS

Description	Criteria
Trace	Particles are present but estimated to be less than 5%
Few	5 to 10%
Little	15 to 25%
Some	30 to 45%
Mostly	50 to 100%

PARTICLE SIZE

Description		Size
Boulder		> 12"
Cobble		3" to 12"
Gravel	Coarse	3/4" to 3"
	Fine	No. 4 to 3/4"
Sand	Coarse	No. 10 to No. 4
	Medium	No. 40 to No. 10
	Fine	No. 200 to No. 40

LOG OF TEST BORINGS NO. 2
BIXBY CHANNEL

SCALE AS SHOWN

DD-53

REVISED BY	K.P	08/10/09
DATE REVISED		
J.FANG	G.J.GUNARANJAN	
CALCULATED-DESIGNED BY		
CHECKED BY		
CONSULTANT FUNCTIONAL SUPERVISOR	K.ARULMOLI	

STATE OF CALIFORNIA - DEPARTMENT OF TRANSPORTATION — Caltrans

LAST REVISION DATE PLOTTED => 03-FEB-2010
TIME PLOTTED => 10:35
08-10-09

BORDER LAST REVISED 8/1/2008

RELATIVE BORDER SCALE IS IN INCHES 0 1 2 3

USERNAME => trcarol
DGN FILE => c071631ic053.dgn

CU 12235

EA 071631

Dist	COUNTY	ROUTE	POST MILES TOTAL PROJECT	SHEET No.	TOTAL SHEETS
12	Ora	22,405, 605	R0.3/R0.9, 22.3/24.0,3.0/R1.6	452	1929

REGISTERED CIVIL ENGINEER — 08/10/09 DATE

ANDREW V. KORKOS, No. GE 2357, Exp. 03/31/10, GEOTECHNICAL, REGISTERED PROFESSIONAL ENGINEER, STATE OF CALIFORNIA

2-1-10
PLANS APPROVAL DATE

THE STATE OF CALIFORNIA OR ITS OFFICERS OR AGENTS SHALL NOT BE RESPONSIBLE FOR THE ACCURACY OR COMPLETENESS OF ELECTRONIC COPIES OF THIS PLAN SHEET.

EARTH MECHANICS, INC.
17660 NEWHOPE ST. SUITE E
FOUNTAIN VALLEY, CA 92708

OCTA
550 S. MAIN STREET
ORANGE, CA 92863-1584

BENCHMARKS:

Monument: 1A-144-04

Described by OCS 2005 - Found 3.75" OCS aluminum benchmark disk stamped "1A-144-04", set in the southwesterly corner of a 4.4 ft by 4.4 ft concrete catch basin. Monument is located in the northeasterly corner of the intersection of Seal Beach Boulevard and St. Cloud Drive, 44 ft easterly of the centerline of Seal Beach Boulevard and 58 ft northerly of the centerline of St. Cloud Dr. Monument is set level with the sidewalk.

Elevation: 15.37 feet

NOTES:

(1) This LOTB sheet (Boring Record) was prepared in accordance with the Caltrans Soil and Rock Classification Logging, Classification and Presentation Manual (June 2007).

(2) 2.4" samples were taken using a California Modified Sampler.

(3) An automatic trip hammer system consisting of a hammer weight of 140 lbs falling a distance of 30" was used to advance the drive sampler.

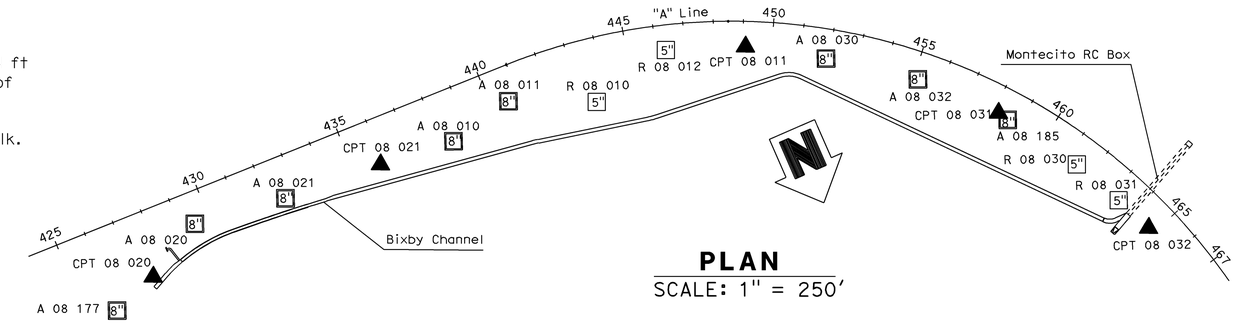

PLAN
SCALE: 1" = 250'

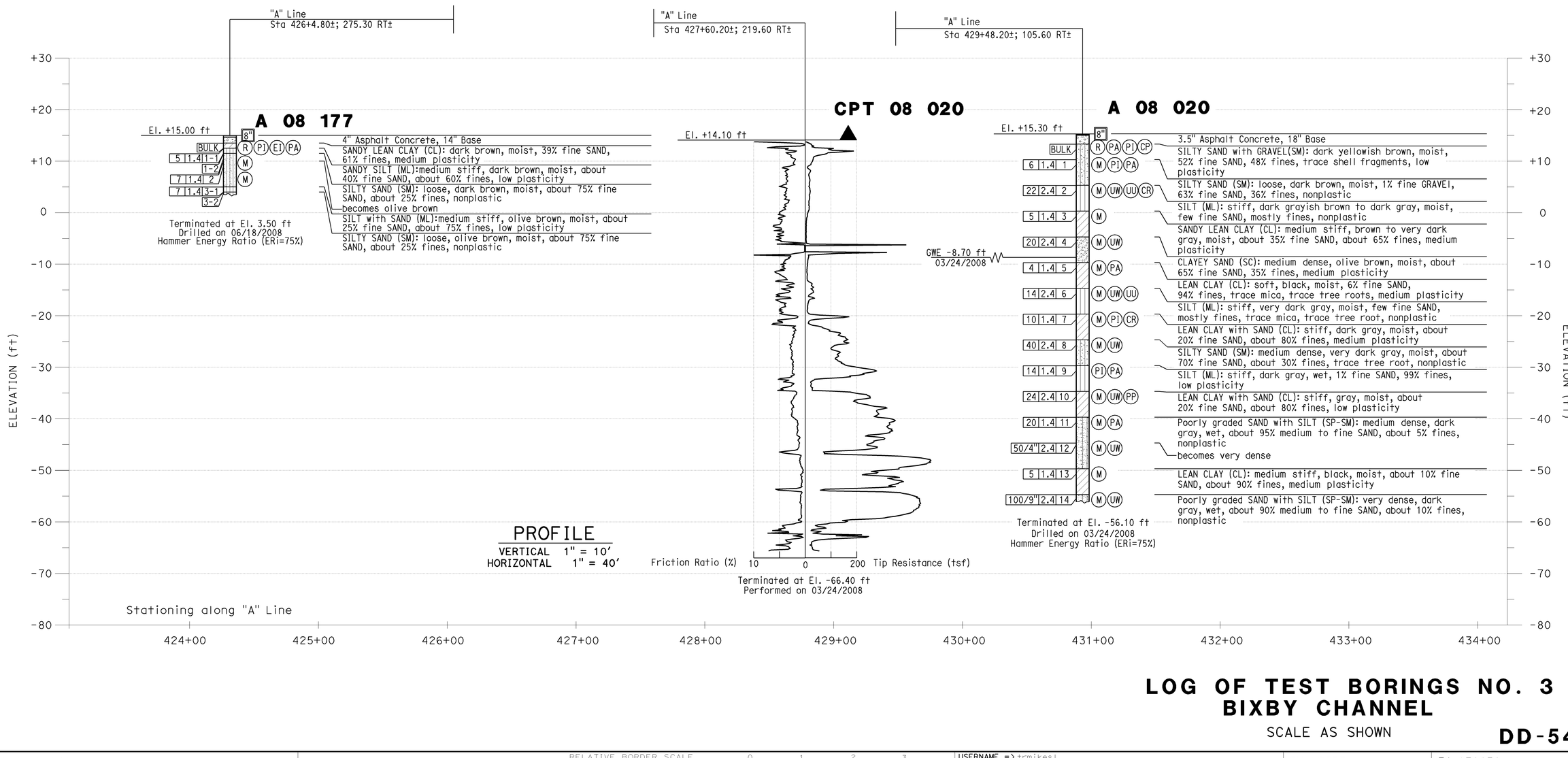

PROFILE
VERTICAL 1" = 10'
HORIZONTAL 1" = 40'

LOG OF TEST BORINGS NO. 3
BIXBY CHANNEL

SCALE AS SHOWN

DD-54

REVISED BY	DATE REVISED
K.P	08/10/09

CALCULATED-DESIGNED BY: J.FANG
CHECKED BY: G.J.GUNARANJAN
CONSULTANT FUNCTIONAL SUPERVISOR: K.ARULMOLI

STATE OF CALIFORNIA - DEPARTMENT OF TRANSPORTATION
Caltrans

LAST REVISION: DATE PLOTTED => 03-FEB-2010
08-10-09 TIME PLOTTED => 09:49

BORDER LAST REVISED 8/1/2008 | RELATIVE BORDER SCALE IS IN INCHES 0 1 2 3 | USERNAME => trmikesl | DGN FILE => c07163ic054.dgn | CU 12235 | EA 071631

BENCHMARKS:

Monument: 1A-144-04

Described by OCS 2005 - Found 3.75" OCS aluminum benchmark disk stamped "1A-144-04", set in the southwesterly corner of a 4.4 ft by 4.4 ft concrete catch basin. Monument is located in the northeasterly corner of the intersection of Seal Beach Boulevard and St. Cloud Drive, 44 ft easterly of the centerline of Seal Beach Boulevard and 58 ft northerly of the centerline of St. Cloud Dr. Monument is set level with the sidewalk.

Elevation: 15.37 feet

NOTES:

(1) This LOTB sheet (Boring Record) was prepared in accordance with the Caltrans Soil and Rock Classification Logging, Classification and Presentation Manual (June 2007).

(2) 2.4" samples were taken using a California Modified Sampler.

(3) An automatic trip hammer system consisting of a hammer weight of 140 lbs falling a distance of 30" was used to advance the drive sampler.

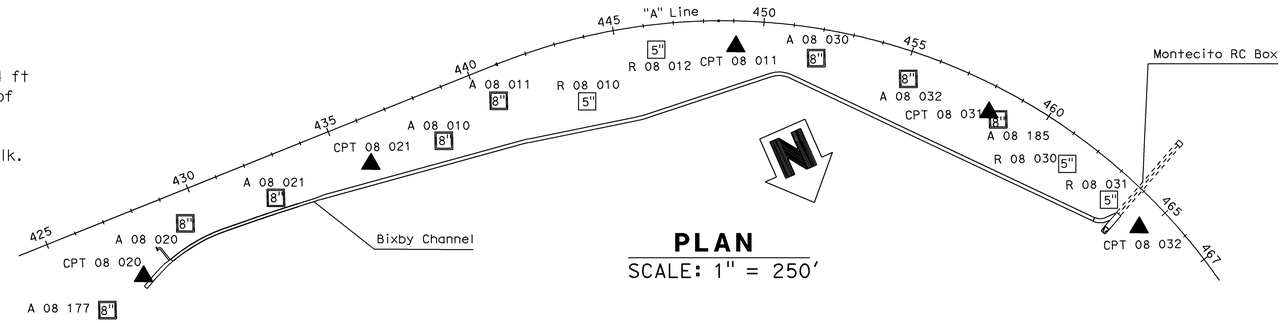

PLAN
SCALE: 1" = 250'

Dist	COUNTY	ROUTE	POST MILES TOTAL PROJECT	SHEET No.	TOTAL SHEETS
12	Ora	22,405, 605	R0.3/R0.9, 22.3/24.0,3.0/R1.6	453	1929

REGISTERED CIVIL ENGINEER — 08/10/09 DATE

ANDREW V. KORKOS No. GE 2357 Exp. 03/31/10 GEOTECHNICAL — REGISTERED PROFESSIONAL ENGINEER — STATE OF CALIFORNIA

2-1-10
PLANS APPROVAL DATE

THE STATE OF CALIFORNIA OR ITS OFFICERS OR AGENTS SHALL NOT BE RESPONSIBLE FOR THE ACCURACY OR COMPLETENESS OF ELECTRONIC COPIES OF THIS PLAN SHEET.

EARTH MECHANICS, INC.
17660 NEWHOPE ST. SUITE E
FOUNTAIN VALLEY, CA 92708

OCTA
550 S. MAIN STREET
ORANGE, CA 92863-1584

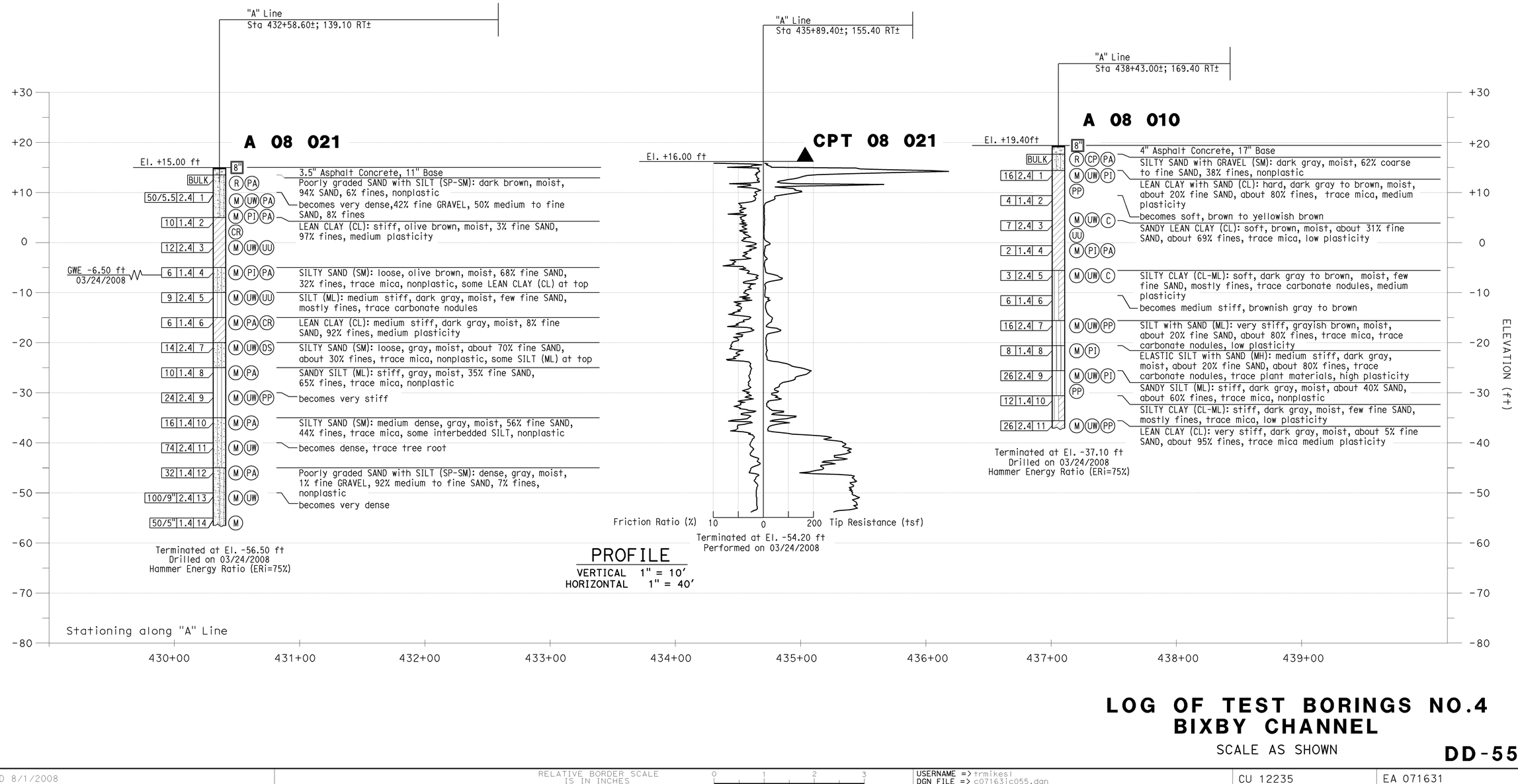

PROFILE
VERTICAL 1" = 10'
HORIZONTAL 1" = 40'

LOG OF TEST BORINGS NO.4
BIXBY CHANNEL

SCALE AS SHOWN

DD-55

REVISED BY: K.P | DATE REVISED: 08/10/09
CALCULATED-DESIGNED BY: J.FANG | CHECKED BY: G.J.GUNARANJAN
CONSULTANT FUNCTIONAL SUPERVISOR: K.ARULMOLI
STATE OF CALIFORNIA - DEPARTMENT OF TRANSPORTATION — Caltrans

LAST REVISION | DATE PLOTTED => 03-FEB-2010 | TIME PLOTTED => 09:50
08-10-09

BORDER LAST REVISED 8/1/2008 | RELATIVE BORDER SCALE IS IN INCHES 0 1 2 3 | USERNAME => trmikesl | DGN FILE => c07163ic055.dgn | CU 12235 | EA 071631

BENCHMARKS:

Monument: 1A-144-04

Described by OCS 2005 - Found 3.75" OCS aluminum benchmark disk stamped "1A-144-04" set in the southwesterly corner of a 4.4 ft by 4.4 ft concrete catch basin. Monument is located in the northeasterly corner of the intersection of Seal Beach Boulevard and St. Cloud Drive, 44 ft easterly of the centerline of Seal Beach Boulevard and 58 ft northerly of the centerline of St. Cloud Dr. Monument is set level with the sidewalk. Elevation: 15.37 feet

NOTES:

(1) This LOTB sheet (Boring Record) was prepared in accordance with the Caltrans Soil and Rock Classification Logging, Classification and Presentation Manual (June 2007).
(2) 2.4" samples were taken using a California Modified Sampler.
(3) A rope and cat-head hammer system consisting of a hammer weight of 140 lbs falling a distance of 30" was used to advance the drive sampler.
(4) An automatic trip hammer system consisting of a hammer weight of 140 lbs falling a distance of 30" was used to advance the sampler.

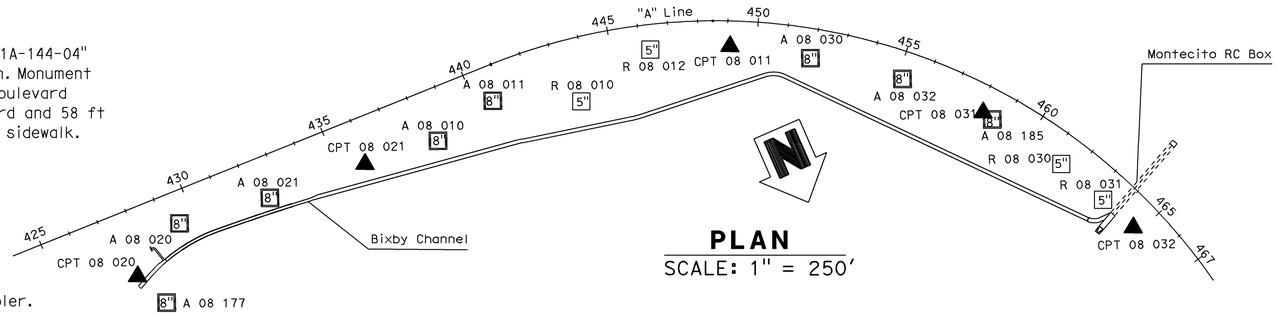

PLAN
SCALE: 1" = 250'

Dist	COUNTY	ROUTE	POST MILES TOTAL PROJECT	SHEET No.	TOTAL SHEETS
12	Ora	22,405, 605	R0.3/R0.9, 22.3/24.0,3.0/R1.6	454	1929

ANDREW V. KORKOS — 08/10/09
REGISTERED CIVIL ENGINEER — DATE

2-1-10
PLANS APPROVAL DATE

REGISTERED PROFESSIONAL ENGINEER — ANDREW V. KORKOS — No. GE 2357 — Exp. 03/31/10 — GEOTECHNICAL — STATE OF CALIFORNIA

THE STATE OF CALIFORNIA OR ITS OFFICERS OR AGENTS SHALL NOT BE RESPONSIBLE FOR THE ACCURACY OR COMPLETENESS OF ELECTRONIC COPIES OF THIS PLAN SHEET.

EARTH MECHANICS, INC.
17660 NEWHOPE ST. SUITE E
FOUNTAIN VALLEY, CA 92708

OCTA
550 S. MAIN STREET
ORANGE, CA 92863-1584

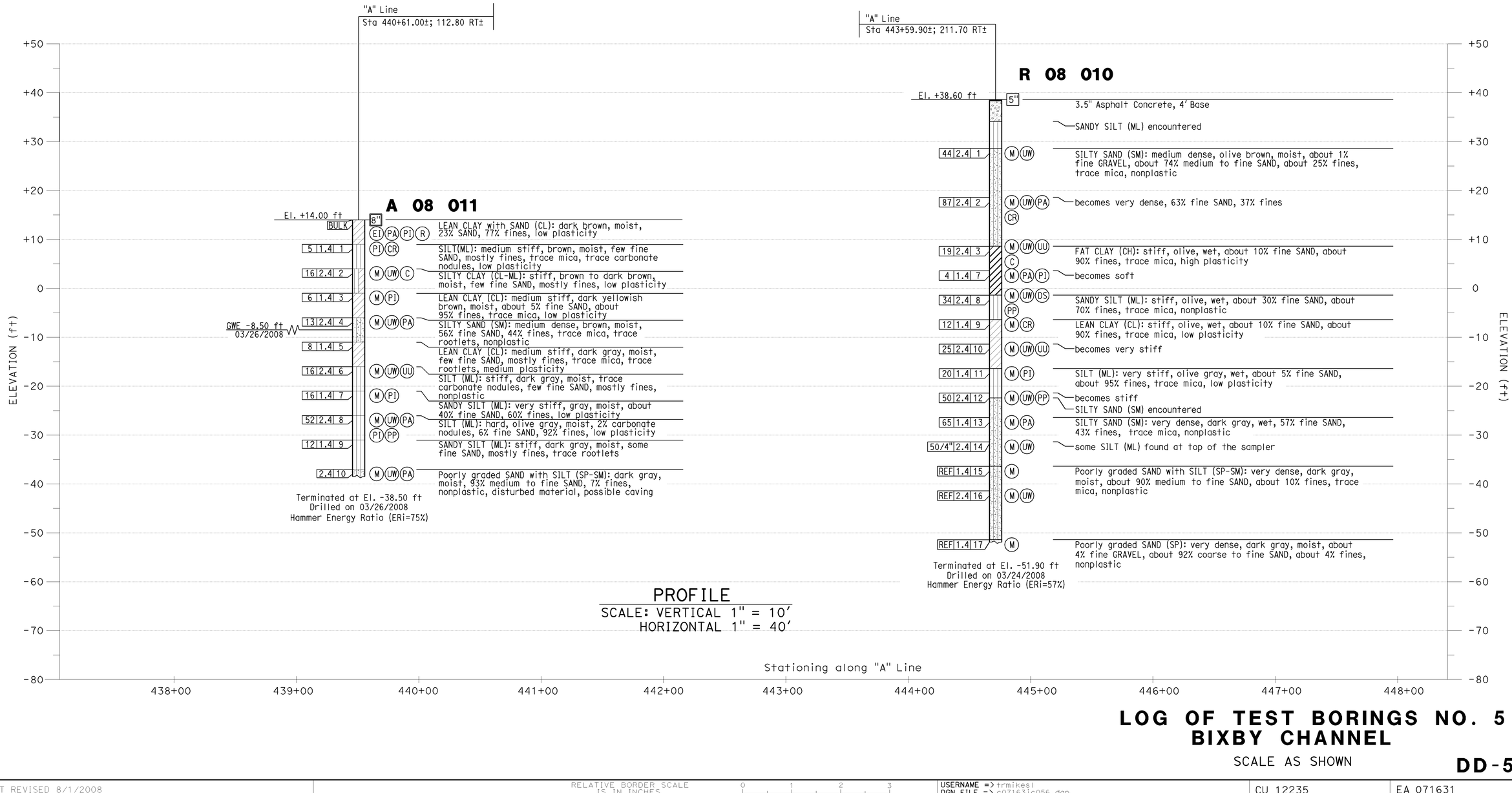

PROFILE
SCALE: VERTICAL 1" = 10'
HORIZONTAL 1" = 40'

LOG OF TEST BORINGS NO. 5
BIXBY CHANNEL

SCALE AS SHOWN

DD-56

STATE OF CALIFORNIA - DEPARTMENT OF TRANSPORTATION
Caltrans
CONSULTANT FUNCTIONAL SUPERVISOR: K.ARULMOLI
CALCULATED-DESIGNED BY: J.FANG
CHECKED BY: G.J.GUNARANJAN
REVISED BY: K.P
DATE REVISED: 08/10/09
LAST REVISION — DATE PLOTTED => 03-FEB-2010 — TIME PLOTTED => 09:50 — 08-10-09

BORDER LAST REVISED 8/1/2008
RELATIVE BORDER SCALE IS IN INCHES 0 1 2 3
USERNAME => trmikesl
DGN FILE => c07163ic056.dgn
CU 12235
EA 071631

BENCHMARKS:

Monument: 1A-144-04

Described by OCS 2005 - Found 3.75" OCS aluminum benchmark disk stamped "1A-144-04", set in the southwesterly corner of a 4.4 ft by 4.4 ft concrete catch basin. Monument is located in the northeasterly corner of the intersection of Seal Beach Boulevard and St. Cloud Drive, 44 ft easterly of the centerline of Seal Beach Boulevard and 58 ft northerly of the centerline of St. Cloud Dr. Monument is set level with the sidewalk. Elevation: 15.37 feet

NOTES:

(1) This LOTB sheet (Boring Record) was prepared in accordance with the Caltrans Soil and Rock Classification Logging, Classification and Presentation Manual (June 2007).

(2) 2.4" samples were taken using a California Modified Sampler.

(3) A rope and cat-head hammer system consisting of a hammer weight of 140 lbs falling a distance of 30" was used to advance the drive sampler.

(4) AN AUTOMATIC TRIP HAMMER SYSTEM CONSISTING OF A HAMMER WEIGHT OF 140 LBS FALLING A DISTANCE OF 30" WAS USED TO ADVANCE THE SAMPLER.

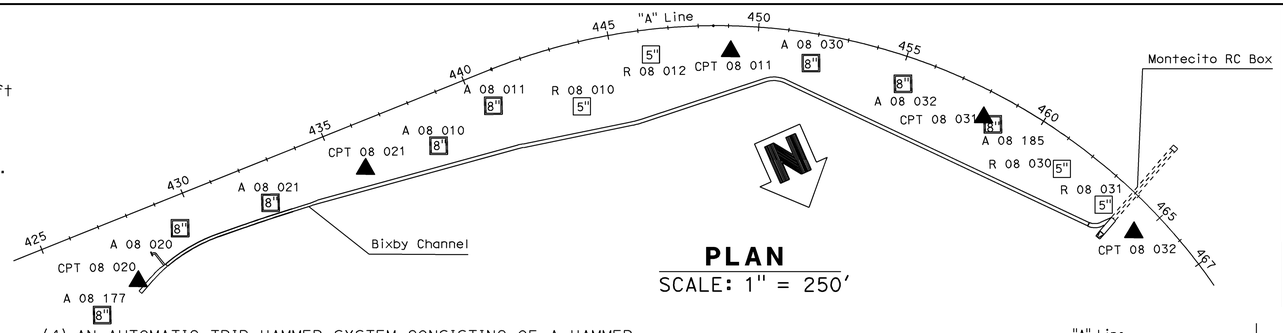

PLAN
SCALE: 1" = 250'

Dist	COUNTY	ROUTE	POST MILES TOTAL PROJECT	SHEET No.	TOTAL SHEETS
12	Ora	22,405, 605	R0.3/R0.9, 22.3/24.0,3.0/R1.6	455	1929

ANDREW V. KORKOS — REGISTERED CIVIL ENGINEER — 08/10/09 DATE

2-1-10 PLANS APPROVAL DATE

REGISTERED PROFESSIONAL ENGINEER — ANDREW V. KORKOS — No. GE 2357 — Exp. 03/31/10 — GEOTECHNICAL — STATE OF CALIFORNIA

THE STATE OF CALIFORNIA OR ITS OFFICERS OR AGENTS SHALL NOT BE RESPONSIBLE FOR THE ACCURACY OR COMPLETENESS OF ELECTRONIC COPIES OF THIS PLAN SHEET.

EARTH MECHANICS, INC.
17660 NEWHOPE ST. SUITE E
FOUNTAIN VALLEY, CA 92708

OCTA
550 S. MAIN STREET
ORANGE, CA 92863-1584

R 08 012

"A" Line
Sta 446+35.10±; 83.40 RT±
El. +11.50 ft

BULK	5"	R PI	SILTY SAND (SM): olive brown, moist, mostly medium to fine SAND, some fines, trace mica, low plasticity
7 1.4 1-1	PI		
1.4 1-2	M	PI	SILT with SAND (ML): medium stiff, dark brown, moist, about 20% fine SAND, about 80% fines, low plasticity
12 2.4 2	M	UW PP	FAT CLAY with SAND (CH): medium stiff, dark brown, moist, about 20% fine SAND, about 80% fines, trace carbonate nodules, high plasticity
7 1.4 3	PI	CR	LEAN CLAY with SAND (CL): stiff, olive brown, moist, about 8% carbonate nodules, about 15% fine SAND, about 77% fines,
13 2.4 4	M	UW PA	becomes medium stiff, dark olive gray, about 20% fine SAND,
	UU		about 80% fines, lenses of SANDY SILT at top
12 1.4 5			FAT CLAY (CH): medium stiff, dark olive gray, moist, 1% carbonate nodules, 3% fine SAND, 96% fines, high plasticity
28 2.4 6	M	UW	No recovery
47 1.4 7	M	PA	LEAN CLAY (CL): very stiff, bluish gray, moist, about 10% fine SAND, about 90% fines, medium to high plasticity, some SILT at the tip
50/5" 2.4 8	M	UW PP	SILT with SAND (ML): hard, olive gray, wet, 26% fine SAND, 74% fines, trace mica, nonplastic
63 1.4 9			Poorly graded SAND with SILT (SP-SM): very dense, gray to olive gray, moist, about 95% medium to fine SAND, about 5% fines,
REF 2.4 10	M	UW	nonplastic
50/5.5" 1.4 11			Poorly graded SAND (SP): very dense, gray, wet, about 96% coarse to fine SAND, about 4% fines, nonplastic, one piece of 1.5" GRAVEL at the tip
REF 2.4 12			becomes olive gray to gray
73 1.4 13	M	PA	Poorly graded SAND with SILT (SP-SM): very dense, gray, wet, 4% fine GRAVEL, 88% coarse to fine SAND, 8% fines, nonplastic
REF 2.4 14			Poorly graded SAND with GRAVEL (SP): very dense, gray, wet, about 40% fine GRAVEL, about 57% coarse to fine SAND, about 3% fines, nonplastic
50/4" 1.4 15-1			SILTY SAND (SM): very dense, dark gray, moist, about 65% medium
1.4 15-2			to fine SAND, about 35% fines, nonplastic
REF 2.4 16	M	UW	SANDY SILT (ML): hard, dark gray, moist, about 30% fine SAND, about 70% fines, nonplastic
REF 1.4 17			SILTY SAND (SM): very dense, dark gray, moist, about 80% medium to fine SAND, about 20% fines, trace mica, nonplastic
REF 2.4 18			Poorly graded SAND with SILT and GRAVEL (SP-SM): very dense, gray, wet, about 25% fine GRAVEL, about 69%coarse to fine SAND, about 6% fines, nonplastic
46 1.4 19-1			Poorly graded SAND (SP): very dense, gray, wet, about 3% fine
1.4 19-2	M	PI	GRAVEL, about 93% coarse to fine SAND, about 4% fines, nonplastic
REF 2.4 20			with more GRAVEL
REF 1.4 21	M	PA	SANDY LEAN CLAY (CL): hard, dark gray, moist, about 35% medium to fine SAND, about 65% fines, medium plasticity, some SAND at tip
REF 2.4 22			Poorly graded SAND with SILT and GRAVEL (SP-SM): very dense, dark gray, wet, about 15% fine GRAVEL, about 79% medium to fine SAND, about 6% fines, trace mica, nonplastic
REF 1.4 23	M		Poorly graded SAND with SILT (SP-SM): very dense, dark gray, wet, 90% medium to fine SAND, 10% fines, trace shell fragments nonplastic
REF 2.4 24			SILTY SAND (SM): very dense, dark gray, moist, about 65% fine SAND, about 35% fines, trace mica, trace shell fragments, nonplastic
			some coarse material encountered
			No recovery, driller noted coarse SAND

Terminated at El. -108.60 ft
Drilled on 03/26/2008
Hammer Energy Ratio (ERi=57%)

CPT 08 011

"A" Line
Sta 449+11.00±; 88.20 RT±
El. +12.00 ft

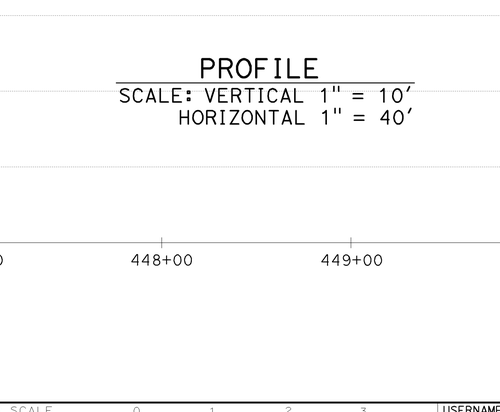

Terminated at El. -78.00 ft
Performed on 03/24/2008

A 08 030

"A" Line
Sta 451+89.00±; 92.00 RT±
El. +12.00 ft

BULK	8"	R PA PI	LEAN CLAY with SAND (CL): dark brown, moist, 15% fine SAND, 85% fines, low plasticity
	EI CP		
12 2.4 1	M	UW C	SILT (ML): medium stiff, dark grayish brown, moist, few fine SAND, mostly fines, trace calcium nodules,
6 1.4 2			
8 2.4 3	M	UW C	LEAN CLAY (CL): medium stiff, brown, moist, few fine SAND, mostly fines, trace carbon nodules, high plasticity
GWE -7.00 ft 03/26/2008			
6 1.4 4	M	CR	becomes dark grayish brown
10 2.4 5	PI	M UW	becomes dark gray, low plasticity
	UU		
10 1.4 6	M	PA	becomes stiff, gray
14 2.4 7	M	UW P	SILT (ML): stiff, gray to brown, wet, few fine SAND, mostly fines, low plasticity
20 1.4 8	PA		SILTY SAND (SM): medium dense, dark gray to brown, wet, mostly fine SAND, little SILT, non plastic, some SILT at bottom
78 2.4 9-1	M	UW	LEAN CLAY (CL): hard, dark gray, moist, few fine SAND, mostly fines, trace mica, some SILT mixed
2.4 9-2			
1.4 10	M	PA	Poorly graded SAND with SILT (SP-SM): very dense, gray, moist, mostly fine SAND, few fines, non plastic
			disturbed material, possible caving

Terminated at El. -39.50 ft
Drilled on 03/26/2008
Hammer Energy Ratio (ERi=75%)

PROFILE
SCALE: VERTICAL 1" = 10'
HORIZONTAL 1" = 40'

ELEVATION (ft): +10, 0, -10, -20, -30, -40, -50, -60, -70, -80, -90, -100, -110, -120

Stationing along "A" Line: 443+00, 444+00, 445+00, 446+00, 447+00, 448+00, 449+00, 450+00, 451+00, 452+00, 453+00

LOG OF TEST BORINGS NO. 6
BIXBY CHANNEL

SCALE AS SHOWN

DD-57

LAST REVISION 08-10-09 | DATE PLOTTED => 03-FEB-2010 | TIME PLOTTED => 09:50

REVISED BY	DATE REVISED
K.P	08/10/09

J.FANG — CALCULATED-DESIGNED BY
G.J.GUNARANJAN — CHECKED BY
K.ARULMOLI — CONSULTANT FUNCTIONAL SUPERVISOR

STATE OF CALIFORNIA - DEPARTMENT OF TRANSPORTATION
Caltrans

BORDER LAST REVISED 8/1/2008 | RELATIVE BORDER SCALE IS IN INCHES 0 1 2 3 | USERNAME => trmikesl | DGN FILE => c07163ic057.dgn | CU 12235 | EA 071631

Dist	COUNTY	ROUTE	POST MILES TOTAL PROJECT	SHEET No.	TOTAL SHEETS
12	Ora	22,405, 605	R0.3/R0.9, 22.3/24.0,3.0/R1.6	456	1929

ANDREW V. KORKOS — 08/10/09
REGISTERED CIVIL ENGINEER — DATE

2-1-10
PLANS APPROVAL DATE

REGISTERED PROFESSIONAL ENGINEER — ANDREW V. KORKOS — No. GE 2357 — Exp. 03/31/10 — GEOTECHNICAL — STATE OF CALIFORNIA

THE STATE OF CALIFORNIA OR ITS OFFICERS OR AGENTS SHALL NOT BE RESPONSIBLE FOR THE ACCURACY OR COMPLETENESS OF ELECTRONIC COPIES OF THIS PLAN SHEET.

EARTH MECHANICS, INC.
17660 NEWHOPE ST. SUITE E
FOUNTAIN VALLEY, CA 92708

OCTA
550 S. MAIN STREET
ORANGE, CA 92863-1584

BENCHMARKS:

Monument: 1A-144-04
Described by OCS 2005 - Found 3.75" OCS aluminum benchmark disk stamped "1A-144-04", set in the southwesterly corner of a 4.4 ft by 4.4 ft concrete catch basin. Monument is located in the northeasterly corner of the intersection of Seal Beach Boulevard and St. Cloud Drive, 44 ft easterly of the centerline of Seal Beach Boulevard and 58 ft northerly of the centerline of St. Cloud Dr. Monument is set level with the sidewalk.
Elevation: 15.37 feet

NOTES:

(1) This LOTB sheet (Boring Record) was prepared in accordance with the Caltrans Soil and Rock Classification Logging, Classification and Presentation Manual (June 2007).
(2) 2.4" samples were taken using a California Modified Sampler.
(3) An automatic trip hammer system consisting of a hammer weight of 140 lbs falling a distance of 30" was used to advance the drive sampler.

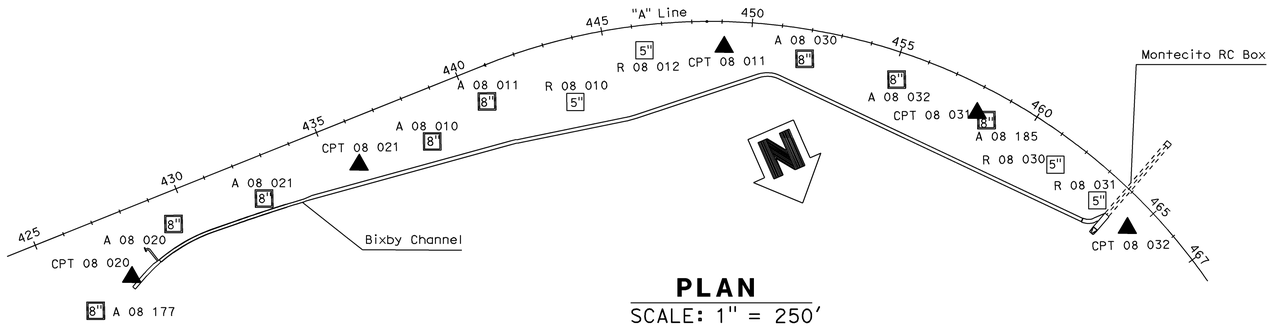

PLAN
SCALE: 1" = 250'

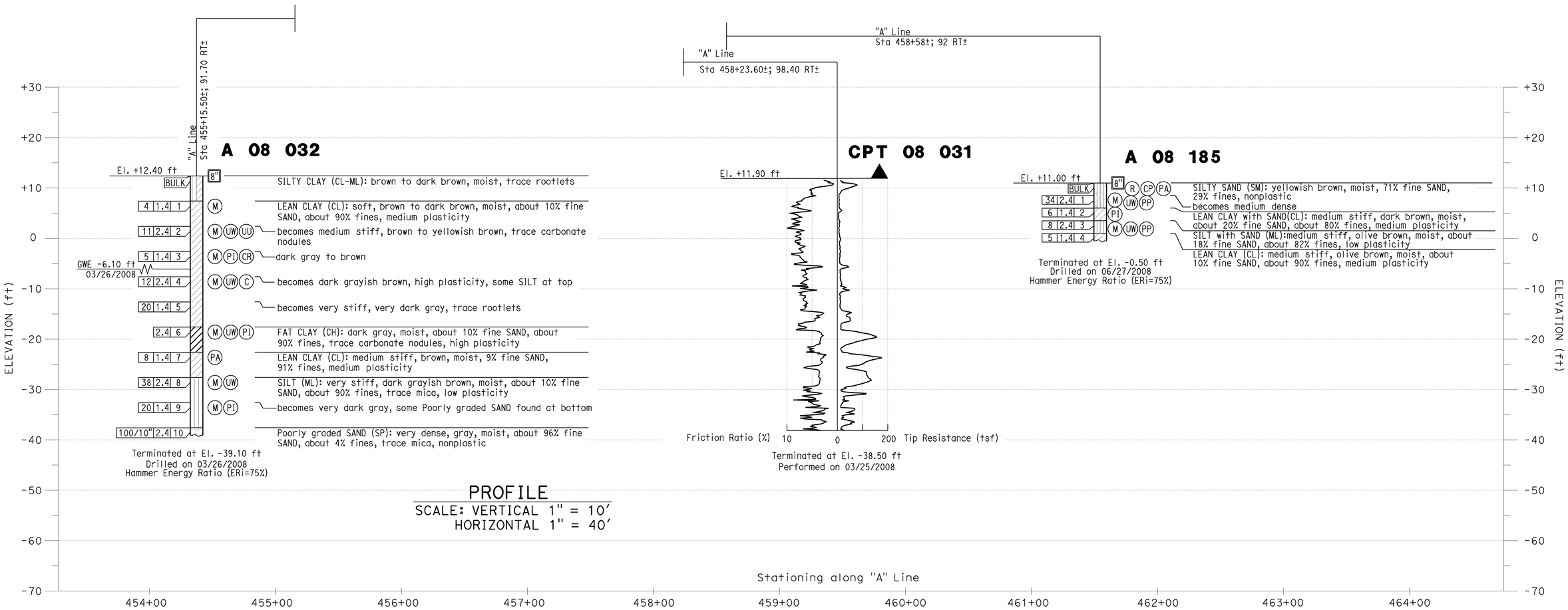

PROFILE
SCALE: VERTICAL 1" = 10'
HORIZONTAL 1" = 40'

LOG OF TEST BORINGS NO. 7
BIXBY CHANNEL
SCALE AS SHOWN

DD-58

STATE OF CALIFORNIA - DEPARTMENT OF TRANSPORTATION
Caltrans
CONSULTANT FUNCTIONAL SUPERVISOR: K.ARULMOLI
CALCULATED-DESIGNED BY: J.FANG
CHECKED BY: G.J.GUNARANJAN
REVISED BY: K.P
DATE REVISED: 08/10/09
LAST REVISION — DATE PLOTTED => 03-FEB-2010 — TIME PLOTTED => 09:50 — 08-10-09

BORDER LAST REVISED 8/1/2008
RELATIVE BORDER SCALE IS IN INCHES 0 1 2 3
USERNAME => trmikesl
DGN FILE => c07163ic058.dgn
CU 12235
EA 071631

BENCHMARKS:

Monument: 1A-144-04

Described by OCS 2005 - Found 3.75" OCS aluminum benchmark disk stamped "1A-144-04", set in the southwesterly corner of a 4.4 ft by 4.4 ft concrete catch basin. Monument is located in the northeasterly corner of the intersection of Seal Beach Boulevard and St. Cloud Drive, 44 ft easterly of the centerline of Seal Beach Boulevard and 58 ft northerly of the centerline of St. Cloud Dr. Monument is set level with the sidewalk. Elevation: 15.37 feet

NOTES:

(1) This LOTB sheet (Boring Record) was prepared in accordance with the Caltrans Soil and Rock Classification Logging, Classification and Presentation Manual (June 2007).
(2) 2.4" samples were taken using a California Modified Sampler.
(3) A rope and cat-head hammer system consisting of a hammer weight of 140 lbs falling a distance of 30" was used to advance the drive sampler.

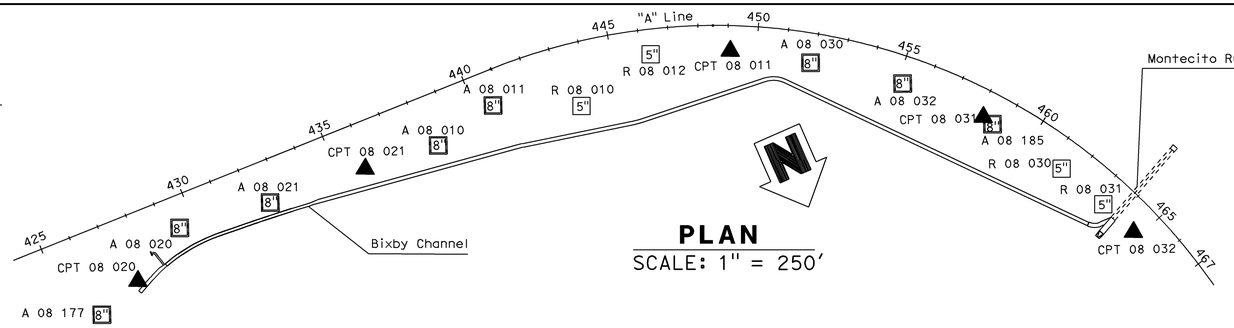

PLAN
SCALE: 1" = 250'

Dist	COUNTY	ROUTE	POST MILES TOTAL PROJECT	SHEET No.	TOTAL SHEETS
12	Ora	22,405, 605	R0.3/R0.9, 22.3/24.0,3.0/R1.6	457	1929

ANDREW V. KORKOS
REGISTERED CIVIL ENGINEER — 08/10/09 DATE

2-1-10
PLANS APPROVAL DATE

REGISTERED PROFESSIONAL ENGINEER — ANDREW V. KORKOS — No. GE 2357 — Exp. 03/31/10 — GEOTECHNICAL — STATE OF CALIFORNIA

THE STATE OF CALIFORNIA OR ITS OFFICERS OR AGENTS SHALL NOT BE RESPONSIBLE FOR THE ACCURACY OR COMPLETENESS OF ELECTRONIC COPIES OF THIS PLAN SHEET.

EARTH MECHANICS, INC.
17660 NEWHOPE ST. SUITE E
FOUNTAIN VALLEY, CA 92708

OCTA
550 S. MAIN STREET
ORANGE, CA 92863-1584

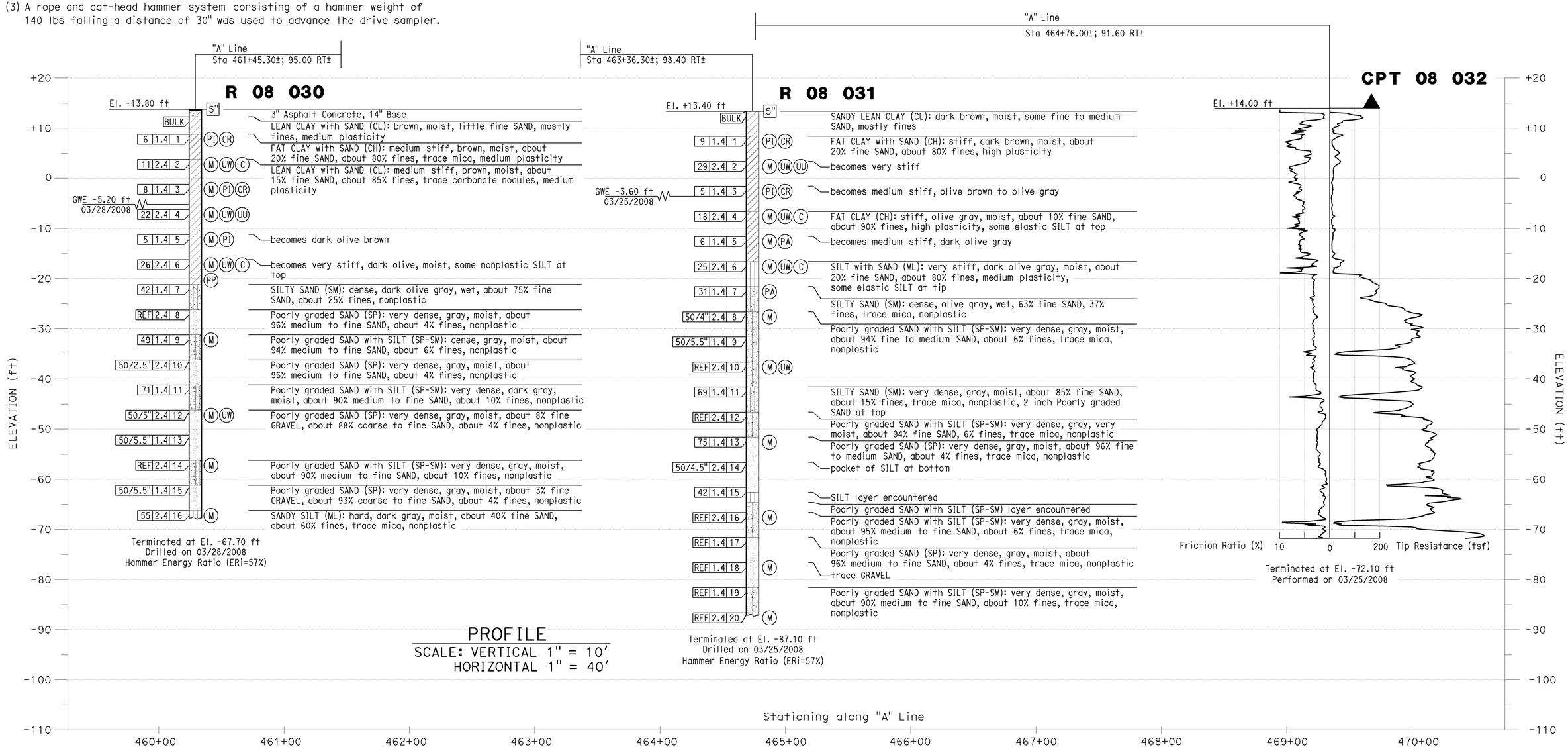

PROFILE
SCALE: VERTICAL 1" = 10'
HORIZONTAL 1" = 40'

LOG OF TEST BORINGS NO. 8
BIXBY CHANNEL
SCALE AS SHOWN

DD-59

STATE OF CALIFORNIA - DEPARTMENT OF TRANSPORTATION
Caltrans
CONSULTANT FUNCTIONAL SUPERVISOR: K.ARULMOLI
CALCULATED-DESIGNED BY: J.FANG
CHECKED BY: G.J.GUNARANJAN
REVISED BY: K.P
DATE REVISED: 08/10/09
LAST REVISION DATE PLOTTED => 03-FEB-2010
TIME PLOTTED => 09:50

BORDER LAST REVISED 8/1/2008
RELATIVE BORDER SCALE IS IN INCHES 0 1 2 3
USERNAME => trmikesl
DGN FILE => c07163ic059.dgn
CU 12235
EA 071631

Dist	COUNTY	ROUTE	POST MILES TOTAL PROJECT	SHEET No.	TOTAL SHEETS
12	Ora	22,405, 605	R0.3/R0.9, 22.3/24.0,3.0/R1.6	458	1929

REGISTERED CIVIL ENGINEER — 8/10/09 DATE

2-1-10
PLANS APPROVAL DATE

REGISTERED PROFESSIONAL ENGINEER
JENNIFER BROOKE RIVERA
No. C70332
Exp. 09/30/10
CIVIL
STATE OF CALIFORNIA

THE STATE OF CALIFORNIA OR ITS OFFICERS OR AGENTS SHALL NOT BE RESPONSIBLE FOR THE ACCURACY OR COMPLETENESS OF ELECTRONIC COPIES OF THIS PLAN SHEET.

AECOM
999 TOWN & COUNTRY RD
ORANGE, CA 92868

ORANGE COUNTY
TRANSPORTATION AUTHORITY
550 S. MAIN STREET
ORANGE, CA 92863-1584

ABBREVIATIONS

S STANDARD
W WATER TIGHT
ACOD ASPHALTIC-CONCRETE OVERSIDE DRAIN

DRAINAGE QUANTITIES

DRAINAGE PLAN SHEET No.	SYSTEM No.	UNIT	MINOR CONCRETE (MINOR STRUCTURE)	CLASS 1 CONCRETE (BIXBY CHANNEL)	STRUCTURAL CONCRETE (BOX CULVERT)	CONCRETE (DITCH LINING)	CLASS 3 AGGREGATE BASE	GRATED LINE DRAIN	(N) BIOSWALE	DITCH EXCAVATION	(N) BIOSTRIP	(N) GRATES TYPE 24-12	(N) GRATES TYPE 36R	(N) GRATES COMBINATION CATCH BASIN	Misc IRON & STEEL **	BAR REINFORCING STEEL (CHANNEL)	BAR REINFORCING STEEL (BOX CULVERT)	(N) STRUCTURAL BACKFILL	12" CSP (0.079" THICK)	18" REINFORCED Conc PIPE	24" REINFORCED Conc PIPE	36" REINFORCED Conc PIPE	DESCRIPTION	STATION
			CY	CY	CY	CY	CY	LF	LF	CY	SF	EA	EA	EA	LB	LB	LB	CY	LF	LF	LF	LF		
D-1	1	a				33.9				132.9													CONCRETE CHANNEL	
D-2	1	a				95.0				372.0													CONCRETE CHANNEL	
D-2	1	a				20.1				84.8													CONCRETE CHANNEL	
D-3	1	a				47.3				199.4													CONCRETE CHANNEL	
D-1	1	b									18635.6												BIOSTRIP	
D-1	1	c																					REMOVE CONCRETE CHANNEL	
D-2	1	c																					REMOVE CONCRETE CHANNEL	
D-3	1	c																					REMOVE CONCRETE CHANNEL	
D-3	1	d																					REMOVE 24" RCP	
D-3	1	e																					REMOVE 18" CMP	
D-3	1	f																					REMOVE DI	14.16 Lt "SB-2" 51+94.14
D-3	1	g																					REMOVE DI	2.17 Rt "SB-2" 48+98.96
D-3	1	h																					REMOVE 24" RCP	
D-3	1	i																					REMOVE DI	27.04 Rt "SB-2" 48+98.28
D-3	1	j																					REMOVE 24" RCP	
						196.2				789.1	18635.6												SUB TOTAL	

(N) INFORMATION ONLY, NOT A SEPARATE BID ITEM

* FOR ADDITIONAL QUANTITIES, SEE SUMMARY OF QUANTITIES
** FOR ADDITIONAL QUANTITIES, SEE STAGE CONSTRUCTION QUANTITIES

DRAINAGE QUANTITIES
DQ-1

REVISED BY: DUC TRAN — DATE REVISED: 8/10/09
CALCULATED-DESIGNED BY: RASHOD GIBSON — CHECKED BY: BROOKE RIVERA
CONSULTANT FUNCTIONAL SUPERVISOR: ANDRZEJ NOWAK
STATE OF CALIFORNIA - DEPARTMENT OF TRANSPORTATION
Caltrans

LAST REVISION DATE PLOTTED => 03-FEB-2010
TIME PLOTTED => 09:50
08-10-09

BORDER LAST REVISED 8/1/2008 — RELATIVE BORDER SCALE IS IN INCHES 0 1 2 3 — USERNAME => trmikesl — DGN FILE => c07163id001.dgn — CU 12235 — EA 071631

Dist	COUNTY	ROUTE	POST MILES TOTAL PROJECT	SHEET No.	TOTAL SHEETS
12	Ora	22,405, 605	R0.3/R0.9, 22.3/24.0,3.0/R1.6	459	1929

REGISTERED CIVIL ENGINEER — DATE 12/22/09

2-1-10
PLANS APPROVAL DATE

REGISTERED PROFESSIONAL ENGINEER
JENNIFER BROOKE RIVERA
No. C70332
Exp. 09/30/10
CIVIL
STATE OF CALIFORNIA

THE STATE OF CALIFORNIA OR ITS OFFICERS OR AGENTS SHALL NOT BE RESPONSIBLE FOR THE ACCURACY OR COMPLETENESS OF ELECTRONIC COPIES OF THIS PLAN SHEET.

AECOM
999 TOWN & COUNTRY RD
ORANGE, CA 92868

ORANGE COUNTY
TRANSPORTATION AUTHORITY
550 S. MAIN STREET
ORANGE, CA 92863-1584

DRAINAGE QUANTITIES

DRAINAGE PLAN SHEET No.	SYSTEM No.	UNIT	48" REINFORCED Conc PIPE	(N) PIPE JOINT CLASSIFICATION	FIELD LEAKAGE TESTING	16" WELDED STEEL PIPE (0.375" WALL THICKNESS)	24" WELDED STEEL PIPE (0.375" WALL THICKNESS)	18" AFES	24" AFES	ROCK SLOPE PROTECTION FABRIC	ROCK SLOPE PROTECTION (FACING, METHOD B)	HOT MIX ASPHALT *	PLACE HOT MIX ASPHALT (Misc AREA)	REMOVE DRAINAGE FACILITY	(N) REMOVE ACOD	REMOVE CULVERT	REMOVE REINFORED CONCRETE BOX CULVERT	REMOVE CONCRETE (HEADWALL)	REMOVE CONCRETE (DITCH)	REMOVE CONCRETE (CHANNEL)	(N) REMOVE EARTHEN SWALE	(N) HEIGHT OF INLET	(N) MAXIMUM COVER	DESCRIPTION	STATION
			LF		LF	LF	LF	EA	EA	SQYD	TON	TON	SQYD	EA	EA	LF	LF	CY	LF	CY	LF	LF	LF		
D-1	1	a																						CONCRETE CHANNEL	
D-2	1	a																						CONCRETE CHANNEL	
D-2	1	a																						CONCRETE CHANNEL	
D-3	1	a																						CONCRETE CHANNEL	
D-1	1	b																						BIOSTRIP	
D-1	1	c																	300					REMOVE CONCRETE CHANNEL	
D-2	1	c																	1000					REMOVE CONCRETE CHANNEL	
D-3	1	c																	273					REMOVE CONCRETE CHANNEL	
D-3	1	d														117								REMOVE 24" RCP	
D-3	1	e														36								REMOVE 18" CMP	
D-3	1	f													1									REMOVE DI	14.16 Lt "SB-2" 51+94.14
D-3	1	g													1									REMOVE DI	2.17 Rt "SB-2" 48+98.96
D-3	1	h														23								REMOVE 24" RCP	
D-3	1	i													1									REMOVE DI	27.04 Rt "SB-2" 48+98.28
D-3	1	j														21								REMOVE 24" RCP	
														3		197.0			1573					SUB TOTAL	

(N) INFORMATION ONLY, NOT A SEPARATE BID ITEM

* FOR ADDITIONAL QUANTITIES, SEE SUMMARY OF QUANTITIES
** FOR ADDITIONAL QUANTITIES, SEE STAGE CONSTRUCTION QUANTITIES

DRAINAGE QUANTITIES
DQ-2

CALCULATED-DESIGNED BY: RASHOD GIBSON
CHECKED BY: BROOKE RIVERA
REVISED BY: DUC TRAN
DATE REVISED: 8/10/09
CONSULTANT FUNCTIONAL SUPERVISOR: ANDRZEJ NOWAK
STATE OF CALIFORNIA - DEPARTMENT OF TRANSPORTATION
Caltrans

LAST REVISION DATE PLOTTED => 03-FEB-2010
TIME PLOTTED => 09:51
08-10-09

BORDER LAST REVISED 8/1/2008
RELATIVE BORDER SCALE IS IN INCHES 0 1 2 3
USERNAME => trmikesl
DGN FILE => c07163id002.dgn
CU 12235
EA 071631

Dist	COUNTY	ROUTE	POST MILES TOTAL PROJECT	SHEET No.	TOTAL SHEETS
12	Ora	22,405, 605	R0.3/R0.9, 22.3/24.0,3.0/R1.6	460	1929

8/10/09
REGISTERED CIVIL ENGINEER DATE

JENNIFER BROOKE RIVERA
No. C70332
Exp. 09/30/10
CIVIL
REGISTERED PROFESSIONAL ENGINEER
STATE OF CALIFORNIA

2-1-10
PLANS APPROVAL DATE

THE STATE OF CALIFORNIA OR ITS OFFICERS OR AGENTS SHALL NOT BE RESPONSIBLE FOR THE ACCURACY OR COMPLETENESS OF ELECTRONIC COPIES OF THIS PLAN SHEET.

AECOM
999 TOWN & COUNTRY RD
ORANGE, CA 92868

ORANGE COUNTY
TRANSPORTATION AUTHORITY
550 S. MAIN STREET
ORANGE, CA 92863-1584

DRAINAGE QUANTITIES

DRAINAGE PLAN SHEET No.	SYSTEM No.	UNIT	MINOR CONCRETE (MINOR STRUCTURE) CY	CLASS 1 CONCRETE (BIXBY CHANNEL) CY	STRUCTURAL CONCRETE (BOX CULVERT) CY	CONCRETE (DITCH LINING) CY	CLASS 3 AGGREGATE BASE CY	GRATED LINE DRAIN LF	(N) BIOSWALE LF	DITCH EXCAVATION CY	(N) BIOSTRIP SF	(N) GRATES TYPE 24-12 EA	GRATES TYPE 36R EA	GRATES COMBINATION CATCH BASIN EA	Misc IRON & STEEL ** LB	BAR REINFORCING STEEL (CHANNEL) LB	BAR REINFORCING STEEL (BOX CULVERT) LB	(N) STRUCTURAL BACKFILL CY	12" CSP (0.079" THICK) LF	18" REINFORCED Conc PIPE LF	24" REINFORCED Conc PIPE LF	36" REINFORCED Conc PIPE LF	DESCRIPTION	STATION
D-1	2	a																			138		24" RCP	
D-1	2	b	2.2									2			634								GD-1 INLET	118.51 Rt "A" 396+88.39
D-1	2	c																			162		24" RCP	
D-2	2	c																			27		24" RCP	
D-2	2	d	2.3									2			634								GD-1 INLET	119.56 Rt "A" 398+77.00
D-2	2	e																			55		24" RCP	
D-2	2	f	0.9																				CONCRETE COLLAR	119.18' Rt "A" 399+31.89
D-3	2	g																			117		24" RCP	
D-4	2	h	14.7																				CONCRETE ENCASEMENT	
D-2	2	i	2.8																				JUNCTION STRUCTURE	136.42 Rt "A" 400+47.37
D-2	2	j			149.3																		3'X2' RCB	
D-2	2	k	6.4																				JUNCTION STRUCTURE	
D-1	2	l																					REMOVE CONCRETE CHANNEL	
D-2	2	m																					REMOVE 3'X2' RCB	
D-2	2	n																					REMOVE DRAINAGE INLETS	13.71 Rt "SB-1" 44+84.06
D-2	2	o																					REMOVE 24" RCP	
			29.3		149.3							4			1268						499		SUB TOTAL	

(N) INFORMATION ONLY, NOT A SEPARATE BID ITEM

* FOR ADDITIONAL QUANTITIES, SEE SUMMARY OF QUANTITIES
** FOR ADDITIONAL QUANTITIES, SEE STAGE CONSTRUCTION QUANTITIES

DRAINAGE QUANTITIES
DQ-3

REVISED BY: DUC TRAN
DATE REVISED: 8/10/09
CALCULATED-DESIGNED BY: RASHOD GIBSON
CHECKED BY: BROOKE RIVERA
CONSULTANT FUNCTIONAL SUPERVISOR: ANDRZEJ NOWAK
STATE OF CALIFORNIA - DEPARTMENT OF TRANSPORTATION
Caltrans

LAST REVISION DATE PLOTTED => 03-FEB-2010
08-10-09 TIME PLOTTED => 09:51

BORDER LAST REVISED 8/1/2008
RELATIVE BORDER SCALE IS IN INCHES 0 1 2 3
USERNAME => trmikesl
DGN FILE => c07163id003.dgn
CU 12235
EA 071631

Dist	COUNTY	ROUTE	POST MILES TOTAL PROJECT	SHEET No.	TOTAL SHEETS
12	Ora	22,405, 605	R0.3/R0.9, 22.3/24.0,3.0/R1.6	461	1929

REGISTERED CIVIL ENGINEER — 12/22/09 DATE

2-1-10
PLANS APPROVAL DATE

REGISTERED PROFESSIONAL ENGINEER
JENNIFER BROOKE RIVERA
No. C70332
Exp. 09/30/10
CIVIL
STATE OF CALIFORNIA

THE STATE OF CALIFORNIA OR ITS OFFICERS OR AGENTS SHALL NOT BE RESPONSIBLE FOR THE ACCURACY OR COMPLETENESS OF ELECTRONIC COPIES OF THIS PLAN SHEET.

AECOM
999 TOWN & COUNTRY RD
ORANGE, CA 92868

ORANGE COUNTY
TRANSPORTATION AUTHORITY
550 S. MAIN STREET
ORANGE, CA 92863-1584

DRAINAGE QUANTITIES

DRAINAGE PLAN SHEET No.	SYSTEM No.	UNIT	48" REINFORCED Conc PIPE	(N) PIPE JOINT CLASSIFICATION	FIELD LEAKAGE TESTING	16" WELDED STEEL PIPE (0.375" WALL THICKNESS)	24" WELDED STEEL PIPE (0.375" WALL THICKNESS)	18" AFES	24" AFES	ROCK SLOPE PROTECTION FABRIC	ROCK SLOPE PROTECTION (FACING, METHOD B)	HOT MIX ASPHALT *	PLACE HOT MIX ASPHALT (Misc AREA)	REMOVE DRAINAGE FACILITY	(N) REMOVE ACOD	REMOVE CULVERT	REMOVE REINFORED CONCRETE BOX CULVERT	REMOVE CONCRETE (HEADWALL)	REMOVE CONCRETE (DITCH)	REMOVE CONCRETE (CHANNEL)	(N) REMOVE EARTHEN SWALE	(N) HEIGHT OF INLET	(N) MAXIMUM COVER	DESCRIPTION	STATION
			LF		LF	LF	LF	EA	EA	SQYD	TON	TON	SQYD	EA	EA	LF	LF	CY	LF	CY	LF	LF	LF		
D-1	2	a		S																			2.7	24" RCP	
D-1	2	b																				4.9		GD-1 INLET	118.51 Rt "A" 396+88.39
D-1	2	c		S																			2.9	24" RCP	
D-2	2	c		S																			2.9	24" RCP	
D-2	2	d																				5.1		GD-1 INLET	119.56 Rt "A" 398+77.00
D-2	2	e		S																			3.0	24" RCP	
D-2	2	f																						CONCRETE COLLAR	119.18' Rt "A" 399+31.89
D-3	2	g		S																				24" RCP	
D-4	2	h																						CONCRETE ENCASEMENT	
D-2	2	i																						JUNCTION STRUCTURE	136.42 Rt "A" 400+47.37
D-2	2	j																						3'X2' RCB	
D-2	2	k																						JUNCTION STRUCTURE	
D-1	2	l																		300				REMOVE CONCRETE CHANNEL	
D-2	2	m																829.4						REMOVE 3'X2' RCB	
D-2	2	n												1										REMOVE DRAINAGE INLETS	13.71 Rt "SB-1" 44+84.06
D-2	2	o														18								REMOVE 24" RCP	
														1		18.0	829.4		300			10.0	11.5	SUB TOTAL	

(N) INFORMATION ONLY, NOT A SEPARATE BID ITEM

* FOR ADDITIONAL QUANTITIES, SEE SUMMARY OF QUANTITIES
** FOR ADDITIONAL QUANTITIES, SEE STAGE CONSTRUCTION QUANTITIES

DRAINAGE QUANTITIES
DQ-4

CALCULATED-DESIGNED BY: RASHOD GIBSON
CHECKED BY: BROOKE RIVERA
REVISED BY: DUC TRAN
DATE REVISED: 8/10/09
CONSULTANT FUNCTIONAL SUPERVISOR: ANDRZEJ NOWAK
STATE OF CALIFORNIA - DEPARTMENT OF TRANSPORTATION
Caltrans

LAST REVISION DATE PLOTTED => 03-FEB-2010
08-10-09 TIME PLOTTED => 09:51

Dist	COUNTY	ROUTE	POST MILES TOTAL PROJECT	SHEET No.	TOTAL SHEETS
12	Ora	22,405, 605	R0.3/R0.9, 22.3/24.0,3.0/R1.6	462	1929

REGISTERED CIVIL ENGINEER — 8/10/09 DATE

REGISTERED PROFESSIONAL ENGINEER — JENNIFER BROOKE RIVERA No. C70332 Exp. 09/30/10 CIVIL — STATE OF CALIFORNIA

2-1-10
PLANS APPROVAL DATE

THE STATE OF CALIFORNIA OR ITS OFFICERS OR AGENTS SHALL NOT BE RESPONSIBLE FOR THE ACCURACY OR COMPLETENESS OF ELECTRONIC COPIES OF THIS PLAN SHEET.

AECOM
999 TOWN & COUNTRY RD
ORANGE, CA 92868

ORANGE COUNTY
TRANSPORTATION AUTHORITY
550 S. MAIN STREET
ORANGE, CA 92863-1584

DRAINAGE QUANTITIES

DRAINAGE PLAN SHEET No.	SYSTEM No.	UNIT	MINOR CONCRETE (MINOR STRUCTURE)	CLASS 1 CONCRETE (BIXBY CHANNEL)	STRUCTURAL CONCRETE (BOX CULVERT)	CONCRETE (DITCH LINING)	CLASS 3 AGGREGATE BASE	GRATED LINE DRAIN	(N) BIOSWALE	DITCH EXCAVATION	(N) BIOSTRIP	(N) GRATES TYPE 24-12	(N) GRATES TYPE 36R	(N) GRATES COMBINATION CATCH BASIN	Misc IRON & STEEL **	BAR REINFORCING STEEL (CHANNEL)	BAR REINFORCING STEEL (BOX CULVERT)	(N) STRUCTURAL BACKFILL	12" CSP (0.079" THICK)	18" REINFORCED Conc PIPE	24" REINFORCED Conc PIPE	36" REINFORCED Conc PIPE	DESCRIPTION	STATION
			CY	CY	CY	CY	CY	LF	LF	CY	SF	EA	EA	EA	LB	LB	LB	CY	LF	LF	LF	LF		
D-2	2A	a	0.9																				CONCRETE COLLAR	110.21 Rt "A" 398+76.81
D-2	2A	b																			7		24" RCP	
D-2	2A	c	1.4																				CONCRETE ENCASEMENT	
D-2	2B	a	0.9																				CONCRETE COLLAR	0.21 Rt "SB-1" 42+23.47
D-2	2B	b																			8		24" RCP	
D-2	2B	c	1.9																				CONCRETE ENCASEMENT	
D-2	2B	d	0.4																				JUNCTION STRUCTURE	8.00 Rt "SB-1" 42+25.56
D-2	2B	e	0.4																				JUNCTION STRUCTURE	17.40 "SB-1" 42+28.08
D-2	2B	f																			5		24" RCP	
D-2	2B	g	1.1																				CONCRETE ENCASEMENT	
D-2	2B	h	1.9									2			634								GD-1 INLET (MOD)	18.70 "SB-1" 42+28.74
D-2	2B	i																					REMOVE 24" RCP	
D-2	2C	a	0.9																				CONCRETE COLLAR	35.54 Lt "SB-1" 45+59.38
D-2	2C	b																			20		24" RCP	
D-2	2C	c	0.5																				JUNCTION STRUCTURE	19.24 Lt "SB-1" 45+69.65
D-2	2D	a	0.3										1		236								GCP INLET	36.87 Rt "SB-1" 44+80.10
D-2	2D	b																		24			18" RCP	
D-2	2D	c	0.2																				JUNCTION STRUCTURE	17.44 Rt "SB-1" 44+80.10
D-2	2D	d	1.9																				CONCRETE ENCASEMENT	
			12.6									2	1		870					24	39		SUB TOTAL	

(N) INFORMATION ONLY, NOT A SEPARATE BID ITEM

* FOR ADDITIONAL QUANTITIES, SEE SUMMARY OF QUANTITIES
** FOR ADDITIONAL QUANTITIES, SEE STAGE CONSTRUCTION QUANTITIES

DRAINAGE QUANTITIES
DQ-5

REVISED BY: DUC TRAN — DATE REVISED: 8/10/09
CALCULATED-DESIGNED BY: RASHOD GIBSON
CHECKED BY: BROOKE RIVERA
CONSULTANT FUNCTIONAL SUPERVISOR: ANDRZEJ NOWAK
STATE OF CALIFORNIA - DEPARTMENT OF TRANSPORTATION
Caltrans

LAST REVISION DATE PLOTTED => 03-FEB-2010
08-10-09 TIME PLOTTED => 09:51

BORDER LAST REVISED 8/1/2008
RELATIVE BORDER SCALE IS IN INCHES 0 1 2 3
USERNAME => trmikesl
DGN FILE => c07163id005.dgn
CU 12235
EA 071631

Dist	COUNTY	ROUTE	POST MILES TOTAL PROJECT	SHEET No.	TOTAL SHEETS
12	Ora	22,405, 605	R0.3/R0.9, 22.3/24.0,3.0/R1.6	463	1929

REGISTERED CIVIL ENGINEER — DATE 12/22/09

2-1-10
PLANS APPROVAL DATE

REGISTERED PROFESSIONAL ENGINEER
JENNIFER BROOKE RIVERA
No. C70332
Exp. 09/30/10
CIVIL
STATE OF CALIFORNIA

THE STATE OF CALIFORNIA OR ITS OFFICERS OR AGENTS SHALL NOT BE RESPONSIBLE FOR THE ACCURACY OR COMPLETENESS OF ELECTRONIC COPIES OF THIS PLAN SHEET.

AECOM
999 TOWN & COUNTRY RD
ORANGE, CA 92868

ORANGE COUNTY
TRANSPORTATION AUTHORITY
550 S. MAIN STREET
ORANGE, CA 92863-1584

DRAINAGE QUANTITIES

DRAINAGE PLAN SHEET No.	SYSTEM No.	UNIT	48" REINFORCED Conc PIPE	(N) PIPE JOINT CLASSIFICATION	FIELD LEAKAGE TESTING	16" WELDED STEEL PIPE (0.375" WALL THICKNESS)	24" WELDED STEEL PIPE (0.375" WALL THICKNESS)	18" AFES	24" AFES	ROCK SLOPE PROTECTION FABRIC	ROCK SLOPE PROTECTION (FACING, METHOD B)	HOT MIX ASPHALT *	PLACE HOT MIX ASPHALT (Misc AREA)	REMOVE DRAINAGE FACILITY	(N) REMOVE ACOD	REMOVE CULVERT	REMOVE REINFORCED CONCRETE BOX CULVERT	REMOVE CONCRETE (HEADWALL)	REMOVE CONCRETE (DITCH)	REMOVE CONCRETE (CHANNEL)	(N) REMOVE EARTHEN SWALE	(N) HEIGHT OF INLET	(N) MAXIMUM COVER	DESCRIPTION	STATION
			LF		LF	LF	LF	EA	EA	SQYD	TON	TON	SQYD	EA	EA	LF	LF	CY	LF	CY	LF	LF	LF		
D-2	2A	a																						CONCRETE COLLAR	110.21 Rt "A" 398+76.81
D-2	2A	b		S																			2.4	24" RCP	
D-2	2A	c																						CONCRETE ENCASEMENT	
D-2	2B	a																						CONCRETE COLLAR	0.21 Rt "SB-1" 42+23.47
D-2	2B	b		S																			1.9	24" RCP	
D-2	2B	c																						CONCRETE ENCASEMENT	
D-2	2B	d																						JUNCTION STRUCTURE	8.00 Rt "SB-1" 42+25.56
D-2	2B	e																						JUNCTION STRUCTURE	17.40 "SB-1" 42+28.08
D-2	2B	f		S																			1.4	24" RCP	
D-2	2B	g																						CONCRETE ENCASEMENT	
D-2	2B	h																					3.7	GD-1 INLET (MOD)	18.70 "SB-1" 42+28.74
D-2	2B	i														9.0								REMOVE 24" RCP	
D-2	2C	a																						CONCRETE COLLAR	35.54 Lt "SB-1" 45+59.38
D-2	2C	b		S																			3.9	24" RCP	
D-2	2C	c																						JUNCTION STRUCTURE	19.24 Lt "SB-1" 45+69.65
D-2	2D	a																					2.4	GCP INLET	36.87 Rt "SB-1" 44+80.10
D-2	2D	b		S																			2.6	18" RCP	
D-2	2D	c																						JUNCTION STRUCTURE	17.44 Rt "SB-1" 44+80.10
D-2	2D	d																						CONCRETE ENCASEMENT	
																9.0						6.1	12.2	SUB TOTAL	

(N) INFORMATION ONLY, NOT A SEPARATE BID ITEM

* FOR ADDITIONAL QUANTITIES, SEE SUMMARY OF QUANTITIES
** FOR ADDITIONAL QUANTITIES, SEE STAGE CONSTRUCTION QUANTITIES

DRAINAGE QUANTITIES
DQ-6

REVISED BY: DUC TRAN — DATE REVISED: 8/10/09
CALCULATED-DESIGNED BY: RASHOD GIBSON
CHECKED BY: BROOKE RIVERA
CONSULTANT FUNCTIONAL SUPERVISOR: ANDRZEJ NOWAK
STATE OF CALIFORNIA - DEPARTMENT OF TRANSPORTATION
Caltrans

LAST REVISION: DATE PLOTTED => 03-FEB-2010 08-10-09 TIME PLOTTED => 09:51

BORDER LAST REVISED 8/1/2008
RELATIVE BORDER SCALE IS IN INCHES 0 1 2 3
USERNAME => trmikesl
DGN FILE => c07163id006.dgn
CU 12235
EA 071631

Dist	COUNTY	ROUTE	POST MILES TOTAL PROJECT	SHEET No.	TOTAL SHEETS
12	Ora	22,405, 605	R0.3/R0.9, 22.3/24.0,3.0/R1.6	464	1929

REGISTERED CIVIL ENGINEER — DATE 8/10/09

2-1-10
PLANS APPROVAL DATE

REGISTERED PROFESSIONAL ENGINEER
JENNIFER BROOKE RIVERA
No. C70332
Exp. 09/30/10
CIVIL
STATE OF CALIFORNIA

THE STATE OF CALIFORNIA OR ITS OFFICERS OR AGENTS SHALL NOT BE RESPONSIBLE FOR THE ACCURACY OR COMPLETENESS OF ELECTRONIC COPIES OF THIS PLAN SHEET.

AECOM
999 TOWN & COUNTRY RD
ORANGE, CA 92868

ORANGE COUNTY
TRANSPORTATION AUTHORITY
550 S. MAIN STREET
ORANGE, CA 92863-1584

DRAINAGE QUANTITIES

DRAINAGE PLAN SHEET No.	SYSTEM No.	UNIT	MINOR CONCRETE (MINOR STRUCTURE)	CLASS 1 CONCRETE (BIXBY CHANNEL)	STRUCTURAL CONCRETE (BOX CULVERT)	CONCRETE (DITCH LINING)	CLASS 3 AGGREGATE BASE	GRATED LINE DRAIN	(N) BIOSWALE	DITCH EXCAVATION	(N) BIOSTRIP	(N) GRATES TYPE 24-12	GRATES TYPE 36R	COMBINATION CATCH BASIN	Misc IRON & STEEL **	BAR REINFORCING STEEL (CHANNEL)	BAR REINFORCING STEEL (BOX CULVERT)	(N) STRUCTURAL BACKFILL	12" CSP (0.079" THICK)	18" REINFORCED Conc PIPE	24" REINFORCED Conc PIPE	36" REINFORCED Conc PIPE	DESCRIPTION	STATION
			CY	CY	CY	CY	CY	LF	LF	CY	SF	EA	EA	EA	LB	LB	LB	CY	LF	LF	LF	LF		
D-2	3	a	1.9									2			634								GD-1 INLET (MOD)	18.69 Rt "SB-1" 43+19.78
D-2	3	b																		5			18" RCP	
D-2	3	c	0.8																				CONCRETE ENCASEMENT	
D-2	3T	a						8															GRATED LINE DRAIN	19.2 Rt "SB-1" 43+08.08
D-2	3T	b						8															GRATED LINE DRAIN	19.2 Rt "SB-1" 43+31.48
D-2	4	a	1.5																				JUNCTION STRUCTURE	133.66 Lt "SB-1" 47+83.00
D-2	4	b			92.7																		4'X2.5' RCB	
D-2	4	c	1.4																				JUNCTION STRUCTURE	95.69 Rt "SB-1" 46+37.73
D-2	4A	a	0.9																				CONCRETE HEADWALL	88.07 Rt "SB-1" 46+67.58
D-2	4A	b																		24			18" RCP	
D-2	4A	c	0.2																				JUNCTION STRUCTURE	65.85 Rt "SB-1" 46+78.30
D-2	4A	d																					REMOVE 18" CMP	
D-2	4B	a																					HMAOD	
D-3	5	a	1.5																				JUNCTION STRUCTURE	28.97 Lt "SB-2" 49+69.69
D-3	5	b																		49			18" RCP	
D-3	5	c	7.7																				CONCRETE ENCASEMENT	
D-3	5	d	1.6									2			634								GD-1 INLET	14.93 Rt "SB-2" 49+68.38
D-3	5	e																		51			18" RCP	
D-3	5	f	10.2																				CONCRETE ENCASEMENT	
D-3	5	g	1.6									2			634								GD-1 INLET	29.53 Rt "SB-2" 50+18.22
			29.4		92.7			16				6			1902					128			SUB TOTAL	

(N) INFORMATION ONLY, NOT A SEPARATE BID ITEM

* FOR ADDITIONAL QUANTITIES, SEE SUMMARY OF QUANTITIES
** FOR ADDITIONAL QUANTITIES, SEE STAGE CONSTRUCTION QUANTITIES

DRAINAGE QUANTITIES
DQ-7

REVISED BY: DUC TRAN — DATE REVISED: 8/10/09
CALCULATED-DESIGNED BY: RASHOD GIBSON
CHECKED BY: BROOKE RIVERA
CONSULTANT FUNCTIONAL SUPERVISOR: ANDRZEJ NOWAK

STATE OF CALIFORNIA - DEPARTMENT OF TRANSPORTATION
Caltrans

LAST REVISION: DATE PLOTTED => 03-FEB-2010
08-10-09 TIME PLOTTED => 09:51

BORDER LAST REVISED 8/1/2008
RELATIVE BORDER SCALE IS IN INCHES 0 1 2 3
USERNAME => trmikesl
DGN FILE => c07163id007.dgn
CU 12235
EA 071631

Dist	COUNTY	ROUTE	POST MILES TOTAL PROJECT	SHEET No.	TOTAL SHEETS
12	Ora	22,405, 605	R0.3/R0.9, 22.3/24.0,3.0/R1.6	465	1929

REGISTERED CIVIL ENGINEER — DATE 12/22/09

2-1-10
PLANS APPROVAL DATE

REGISTERED PROFESSIONAL ENGINEER
JENNIFER BROOKE RIVERA
No. C70332
Exp. 09/30/10
CIVIL
STATE OF CALIFORNIA

THE STATE OF CALIFORNIA OR ITS OFFICERS OR AGENTS SHALL NOT BE RESPONSIBLE FOR THE ACCURACY OR COMPLETENESS OF ELECTRONIC COPIES OF THIS PLAN SHEET.

AECOM
999 TOWN & COUNTRY RD
ORANGE, CA 92868

ORANGE COUNTY
TRANSPORTATION AUTHORITY
550 S. MAIN STREET
ORANGE, CA 92863-1584

DRAINAGE QUANTITIES

DRAINAGE PLAN SHEET No.	SYSTEM No.	UNIT	48" REINFORCED Conc PIPE	(N) PIPE JOINT CLASSIFICATION	FIELD LEAKAGE TESTING	16" WELDED STEEL PIPE (0.375" WALL THICKNESS)	24" WELDED STEEL PIPE (0.375" WALL THICKNESS)	18" AFES	24" AFES	ROCK SLOPE PROTECTION FABRIC	ROCK SLOPE PROTECTION (FACING, METHOD B)	HOT MIX ASPHALT *	PLACE HOT MIX ASPHALT (Misc AREA)	REMOVE DRAINAGE FACILITY	(N) REMOVE ACOD	REMOVE CULVERT	REMOVE REINFORCED CONCRETE BOX CULVERT	REMOVE CONCRETE (HEADWALL)	REMOVE CONCRETE (DITCH)	REMOVE CONCRETE (CHANNEL)	(N) REMOVE EARTHEN SWALE	(N) HEIGHT OF INLET	(N) MAXIMUM COVER	DESCRIPTION	STATION
			LF		LF	LF	LF	EA	EA	SQYD	TON	TON	SQYD	EA	EA	LF	LF	CY	LF	CY	LF	LF	LF		
D-2	3	a																				3.8		GD-1 INLET (MOD)	18.69 Rt "SB-1" 43+19.78
D-2	3	b		S																			2.4	18" RCP	
D-2	3	c																						CONCRETE ENCASEMENT	
D-2	3T	a																						GRATED LINE DRAIN	19.2 Rt "SB-1" 43+08.08
D-2	3T	b																						GRATED LINE DRAIN	19.2 Rt "SB-1" 43+31.48
D-2	4	a																						JUNCTION STRUCTURE	133.66 Lt "SB-1" 47+83.00
D-2	4	b																						4'X2.5' RCB	
D-2	4	c																						JUNCTION STRUCTURE	95.69 Rt "SB-1" 46+37.73
D-2	4A	a																						CONCRETE HEADWALL	88.07 Rt "SB-1" 46+67.58
D-2	4A	b		S																			4.6	18" RCP	
D-2	4A	c																						JUNCTION STRUCTURE	65.85 Rt "SB-1" 46+78.30
D-2	4A	d														26								REMOVE 18" CMP	
D-2	4B	a										5.45	37.29											HMAOD	
D-3	5	a																						JUNCTION STRUCTURE	28.97 Lt "SB-2" 49+69.69
D-3	5	b		S																			0.7	18" RCP	
D-3	5	c																						CONCRETE ENCASEMENT	
D-3	5	d																				3.0		GD-1 INLET	14.93 Rt "SB-2" 49+68.38
D-3	5	e		S																			0.8	18" RCP	
D-3	5	f																						CONCRETE ENCASEMENT	
D-3	5	g																				3.0		GD-1 INLET	29.53 Rt "SB-2" 50+18.22
												5.45	37.3			26.0						9.8	8.5	SUB TOTAL	

(N) INFORMATION ONLY, NOT A SEPARATE BID ITEM

* FOR ADDITIONAL QUANTITIES, SEE SUMMARY OF QUANTITIES
** FOR ADDITIONAL QUANTITIES, SEE STAGE CONSTRUCTION QUANTITIES

DRAINAGE QUANTITIES
DQ-8

CALCULATED-DESIGNED BY	REVISED BY	DUC TRAN
CHECKED BY	DATE REVISED	8/10/09
RASHOD GIBSON		
BROOKE RIVERA		

CONSULTANT FUNCTIONAL SUPERVISOR
ANDRZEJ NOWAK

STATE OF CALIFORNIA - DEPARTMENT OF TRANSPORTATION
Caltrans

LAST REVISION DATE PLOTTED => 03-FEB-2010
08-10-09 TIME PLOTTED => 09:51

BORDER LAST REVISED 8/1/2008

RELATIVE BORDER SCALE IS IN INCHES 0 1 2 3

USERNAME => trmikesl
DGN FILE => c07163id008.dgn

CU 12235

EA 071631

Dist	COUNTY	ROUTE	POST MILES TOTAL PROJECT	SHEET No.	TOTAL SHEETS
12	Ora	22,405, 605	R0.3/R0.9, 22.3/24.0,3.0/R1.6	466	1929

8/10/09
REGISTERED CIVIL ENGINEER DATE

JENNIFER BROOKE RIVERA
No. C70332
Exp. 09/30/10
CIVIL
REGISTERED PROFESSIONAL ENGINEER
STATE OF CALIFORNIA

2-1-10
PLANS APPROVAL DATE

THE STATE OF CALIFORNIA OR ITS OFFICERS OR AGENTS SHALL NOT BE RESPONSIBLE FOR THE ACCURACY OR COMPLETENESS OF ELECTRONIC COPIES OF THIS PLAN SHEET.

AECOM
999 TOWN & COUNTRY RD
ORANGE, CA 92868

ORANGE COUNTY
TRANSPORTATION AUTHORITY
550 S. MAIN STREET
ORANGE, CA 92863-1584

DRAINAGE QUANTITIES

DRAINAGE PLAN SHEET No.	SYSTEM No.	UNIT	MINOR CONCRETE (MINOR STRUCTURE)	CONCRETE (DITCH LINING)	CLASS 1 CONCRETE (BOX CULVERT)	GRATED LINE DRAIN	(N) BIOSWALE	DITCH EXCAVATION	(N) BIOSTRIP	(N) GRATES TYPE 24-12	GRATES TYPE 36R	GRATES COMBINATION CATCH BASIN	Misc IRON & STEEL	BAR REINFORCING STEEL (CHANNEL)	BAR REINFORCING STEEL (BOX CULVERT)	(N) STRUCTURAL BACKFILL	12" CSP (0.079" THICK)	18" REINFORCED Conc PIPE	24" REINFORCED Conc PIPE	36" REINFORCED Conc PIPE	48" REINFORCED Conc PIPE	(N) PIPE JOINT CLASSIFICATION	FIELD LEAKAGE TEST	DESCRIPTION	STATION
			CY	CY	CY	LF	LF	CY	SQFT	EA	EA	EA	LB	LB	LB	CY	LF	LF	LF	LF	LF		LF		
D-3	6	a		14.2				30.1																CONCRETE CHANNEL	
D-3	6	b							8589.7															BIOSTRIP	
D-16	6	b							13392.5															BIOSTRIP	
D-3	7	a					160	11.8																BIOSWALE	
D-3	7	b																						ROCK SLOPE PROTECTION	
D-3	7	c																						18" AFES	84.43 Rt "SB-5" 8+56.15
D-3	7	d																64				S		18" RCP	
D-3	7	e	3.7							2			634											GD-1 INLET	24.43 Rt "SB-5" 8+39.15
D-3	7	f																81				S		18" RCP	
D-3	7	g	4.6									1	560											APWA CB 301	55.00 Rt "SB" 59+93.59
D-3	7	h																115				S		18" RCP	
D-3	7	i	4.7																					CONCRETE ENCASEMENT	
D-3	7	j	4.6									1	560											APWA CB 301	62.00 Lt "SB" 59+78.29
D-3	7	k																						REMOVE DI	38.76 Rt "SB" 59+94.52
D-3	7	l																						REMOVE 24" RCP	
D-3	7	m																						REMOVE DI	5.21 Rt "SB-5" 8+37.79
D-3	7	n																						REMOVE 24" CMP	
			17.6	14.2			160.0	41.9	21982.2	2		2	1754.0					261						SHEET TOTALS	

(N) INFORMATION ONLY, NOT A SEPARATE BID ITEM

* FOR ADDITIONAL QUANTITIES, SEE SUMMARY OF QUANTITIES

DRAINAGE QUANTITIES
DQ-9

STATE OF CALIFORNIA - DEPARTMENT OF TRANSPORTATION
CONSULTANT FUNCTIONAL SUPERVISOR: ANDRZEJ NOWAK
CALCULATED-DESIGNED BY: RASHOD GIBSON
CHECKED BY: BROOKE RIVERA
REVISED BY: DUC TRAN
DATE REVISED: 8/10/09

LAST REVISION DATE PLOTTED => 03-FEB-2010
LAST REVISION TIME PLOTTED => 09:51
08-10-09

Dist	COUNTY	ROUTE	POST MILES TOTAL PROJECT	SHEET No.	TOTAL SHEETS
12	Ora	22,405, 605	R0.3/R0.9, 22.3/24.0,3.0/R1.6	467	1929

REGISTERED CIVIL ENGINEER — DATE 12/22/09

2-1-10
PLANS APPROVAL DATE

REGISTERED PROFESSIONAL ENGINEER
JENNIFER BROOKE RIVERA
No. C70332
Exp. 09/30/10
CIVIL
STATE OF CALIFORNIA

THE STATE OF CALIFORNIA OR ITS OFFICERS OR AGENTS SHALL NOT BE RESPONSIBLE FOR THE ACCURACY OR COMPLETENESS OF ELECTRONIC COPIES OF THIS PLAN SHEET.

AECOM
999 TOWN & COUNTRY RD
ORANGE, CA 92868

ORANGE COUNTY
TRANSPORTATION AUTHORITY
550 S. MAIN STREET
ORANGE, CA 92863-1584

DRAINAGE QUANTITIES

DRAINAGE PLAN SHEET No.	SYSTEM No.	UNIT	48" REINFORCED Conc PIPE	(N) PIPE JOINT CLASSIFICATION	FIELD LEAKAGE TESTING	16" WELDED STEEL PIPE (0.375" WALL THICKNESS)	24" WELDED STEEL PIPE (0.375" WALL THICKNESS)	18" AFES	24" AFES	ROCK SLOPE PROTECTION FABRIC	ROCK SLOPE PROTECTION (FACING, METHOD B)	HOT MIX ASPHALT *	PLACE HOT MIX ASPHALT (Misc AREA)	REMOVE DRAINAGE FACILITY	(N) REMOVE ACOD	REMOVE CULVERT	REMOVE REINFORED CONCRETE BOX CULVERT	REMOVE CONCRETE (HEADWALL)	REMOVE CONCRETE (DITCH)	REMOVE CONCRETE (CHANNEL)	(N) REMOVE EARTHEN SWALE	(N) HEIGHT OF INLET	(N) MAXIMUM COVER	DESCRIPTION	STATION
			LF		LF	LF	LF	EA	EA	SQYD	TON	TON	SQYD	EA	EA	LF	LF	CY	LF	CY	LF	LF	LF		
D-3	6	a																						CONCRETE CHANNEL	
D-3	6	b																						BIOSTRIP	
D-16	6	b																						BIOSTRIP	
D-3	7	a																						BIOSWALE	
D-3	7	b								3.5	0.99													ROCK SLOPE PROTECTION	
D-3	7	c						1																18" AFES	84.43 R† "SB-5" 8+56.15
D-3	7	d		S																			6.8	18" RCP	
D-3	7	e																				9.4		GD-1 INLET	24.43 R† "SB-5" 8+39.15
D-3	7	f		S																			7.2	18" RCP	
D-3	7	g																				4.0		APWA CB 301	55.00 R† "SB" 59+93.59
D-3	7	h		S																			1.8	18" RCP	
D-3	7	i																						CONCRETE ENCASEMENT	
D-3	7	j																				4.0		APWA CB 301	62.00 L† "SB" 59+78.29
D-3	7	k												1										REMOVE DI	38.76 R† "SB" 59+94.52
D-3	7	l														82								REMOVE 24" RCP	
D-3	7	m												1										REMOVE DI	5.21 R† "SB-5" 8+37.79
D-3	7	n														25								REMOVE 24" CMP	
								1		3.5	1.0			2		107.0						17.4	15.8	SUB TOTAL	

(N) INFORMATION ONLY, NOT A SEPARATE BID ITEM

* FOR ADDITIONAL QUANTITIES, SEE SUMMARY OF QUANTITIES
** FOR ADDITIONAL QUANTITIES, SEE STAGE CONSTRUCTION QUANTITIES

DRAINAGE QUANTITIES
DQ-10

REVISED BY: DUC TRAN — DATE REVISED: 8/10/09
CALCULATED-DESIGNED BY: RASHOD GIBSON
CHECKED BY: BROOKE RIVERA
CONSULTANT FUNCTIONAL SUPERVISOR: ANDRZEJ NOWAK
STATE OF CALIFORNIA - DEPARTMENT OF TRANSPORTATION
Caltrans

LAST REVISION DATE PLOTTED => 03-FEB-2010
08-10-09 TIME PLOTTED => 09:52

BORDER LAST REVISED 8/1/2008
RELATIVE BORDER SCALE IS IN INCHES 0 1 2 3
USERNAME => trmikesl
DGN FILE => c07163id010.dgn
CU 12235
EA 071631

Dist	COUNTY	ROUTE	POST MILES TOTAL PROJECT	SHEET No.	TOTAL SHEETS
12	Ora	22,405, 605	R0.3/R0.9, 22.3/24.0,3.0/R1.6	468	1929

REGISTERED CIVIL ENGINEER — DATE 8/10/09

JENNIFER BROOKE RIVERA No. C70332 Exp. 09/30/10 CIVIL — REGISTERED PROFESSIONAL ENGINEER — STATE OF CALIFORNIA

2-1-10
PLANS APPROVAL DATE

THE STATE OF CALIFORNIA OR ITS OFFICERS OR AGENTS SHALL NOT BE RESPONSIBLE FOR THE ACCURACY OR COMPLETENESS OF ELECTRONIC COPIES OF THIS PLAN SHEET.

AECOM
999 TOWN & COUNTRY RD
ORANGE, CA 92868

ORANGE COUNTY
TRANSPORTATION AUTHORITY
550 S. MAIN STREET
ORANGE, CA 92863-1584

DRAINAGE QUANTITIES

DRAINAGE PLAN SHEET No.	SYSTEM No.	UNIT	MINOR CONCRETE (MINOR STRUCTURE)	CLASS 1 CONCRETE (BIXBY CHANNEL)	STRUCTURAL CONCRETE (BOX CULVERT)	CONCRETE (DITCH LINING)	CLASS 3 AGGREGATE BASE	GRATED LINE DRAIN	(N) BIOSWALE	DITCH EXCAVATION	(N) BIOSTRIP	(N) GRATES			Misc IRON & STEEL **	BAR REINFORCING STEEL (CHANNEL)	BAR REINFORCING STEEL (BOX CULVERT)	(N) STRUCTURAL BACKFILL	12" CSP (0.079" THICK)	18" REINFORCED Conc PIPE	24" REINFORCED Conc PIPE	36" REINFORCED Conc PIPE	DESCRIPTION	STATION
												TYPE 24-12	TYPE 36R	COMBINATION CATCH BASIN										
			CY	CY	CY	CY	CY	LF	LF	CY	SF	EA	EA	EA	LB	LB	LB	CY	LF	LF	LF	LF		
D-3	8	a	1.9									2			634								GD-1 INLET	34.01 Lt "SB-5" 9+50.65
D-3	8	b																			123		24" RCP	
D-3	8	c	11.7																				CONCRETE ENCASEMENT	
D-3	9	a	0.2																				JUNCTION STRUCTURE	71.95 Rt "SB-5" 5+36.36
D-3	9	b	10.3																	71			18" RCP	
D-3	9	c	3.2									2			634								GD-1 INLET	18.70 Rt "SB-5" 5+83.06
D-3	9	d																					REMOVE DI	11.93 Rt "SB-5" 5+83.17
D-3	9	e																					REMOVE 18" CMP	
D-3	10	a	3.6																				JUNCTION STRUCTURE	140.94 Rt "A" 416+06.77
D-3	10	b			60.7																		DOUBLE 4'X4' RCB	
D-3	10	c	0.3																				CONCRETE HEADWALL	154.68 Rt "A" 416+92.37
D-3	10	d				9.4				42.0													CONCRETE CHANNEL	
D-4	10	d				71.8				320.9													CONCRETE CHANNEL	
D-4	10	e	2.8																				CONCRETE HEADWALL	130.07 Rt "A" 422+69.14
D-4	10	f																					48" RCP	
D-4	10	g	6.4																				CONCRETE ENCASEMENT	
D-4	10	h	2.7																				CONCRETE COLLAR	117.53 Rt "A" 422+68.99
D-3	10	i									1239.8												BIOSTRIP	
D-4	10	i									9940.2												BIOSTRIP	
D-3	10	j	3.8																				REINFORCED CONCRETE CHANNEL WALL	
D-4	10	j	27.5																				REINFORCED CONCRETE CHANNEL WALL	
D-3	10	k																					REMOVE CONCRETE CHANNEL	
D-4	10	k																					REMOVE CONCRETE CHANNEL	
D-3	11	a																					HMAOD	
			74.5		60.7	81.2				362.9	11179.9	4			1268					71	123		SUB TOTAL	

(N) INFORMATION ONLY, NOT A SEPARATE BID ITEM

* FOR ADDITIONAL QUANTITIES, SEE SUMMARY OF QUANTITIES
** FOR ADDITIONAL QUANTITIES, SEE STAGE CONSTRUCTION QUANTITIES

DRAINAGE QUANTITIES
DQ-11

REVISED BY: DUC TRAN — DATE REVISED: 8/10/09
CALCULATED-DESIGNED BY: RASHOD GIBSON
CHECKED BY: BROOKE RIVERA
CONSULTANT FUNCTIONAL SUPERVISOR: ANDRZEJ NOWAK
STATE OF CALIFORNIA - DEPARTMENT OF TRANSPORTATION

LAST REVISION DATE PLOTTED => 03-FEB-2010
08-10-09 TIME PLOTTED => 09:52

BORDER LAST REVISED 8/1/2008 — RELATIVE BORDER SCALE IS IN INCHES 0 1 2 3 — USERNAME => trmikesl — DGN FILE => c07163id011.dgn — CU 12235 — EA 071631

Dist	COUNTY	ROUTE	POST MILES TOTAL PROJECT	SHEET No.	TOTAL SHEETS
12	Ora	22,405, 605	R0.3/R0.9, 22.3/24.0,3.0/R1.6	469	1929

REGISTERED CIVIL ENGINEER — DATE 12/22/09

2-1-10
PLANS APPROVAL DATE

REGISTERED PROFESSIONAL ENGINEER
JENNIFER BROOKE RIVERA
No. C70332
Exp. 09/30/10
CIVIL
STATE OF CALIFORNIA

THE STATE OF CALIFORNIA OR ITS OFFICERS OR AGENTS SHALL NOT BE RESPONSIBLE FOR THE ACCURACY OR COMPLETENESS OF ELECTRONIC COPIES OF THIS PLAN SHEET.

AECOM
999 TOWN & COUNTRY RD
ORANGE, CA 92868

ORANGE COUNTY
TRANSPORTATION AUTHORITY
550 S. MAIN STREET
ORANGE, CA 92863-1584

DRAINAGE QUANTITIES

DRAINAGE PLAN SHEET No.	SYSTEM No.	UNIT	48" REINFORCED Conc PIPE	(N) PIPE JOINT CLASSIFICATION	FIELD LEAKAGE TESTING	16" WELDED STEEL PIPE (0.375" WALL THICKNESS)	24" WELDED STEEL PIPE (0.375" WALL THICKNESS)	18" AFES	24" AFES	ROCK SLOPE PROTECTION FABRIC	ROCK SLOPE PROTECTION (FACING, METHOD B)	HOT MIX ASPHALT *	PLACE HOT MIX ASPHALT (Misc AREA)	REMOVE DRAINAGE FACILITY	(N) REMOVE ACOD	REMOVE CULVERT	REMOVE REINFORCED CONCRETE BOX CULVERT	REMOVE CONCRETE (HEADWALL)	REMOVE CONCRETE (DITCH)	REMOVE CONCRETE (CHANNEL)	(N) REMOVE EARTHEN SWALE	(N) HEIGHT OF INLET	(N) MAXIMUM COVER	DESCRIPTION	STATION
			LF		LF	LF	LF	EA	EA	SQYD	TON	TON	SQYD	EA	EA	LF	LF	CY	LF	CY	LF	LF	LF		
D-3	8	a																				4.0		GD-1 INLET	34.01 Lt "SB-5" 9+50.65
D-3	8	b		S																			7.1	24" RCP	
D-3	8	c																						CONCRETE ENCASEMENT	
D-3	9	a																						JUNCTION STRUCTURE	71.95 Rt "SB-5" 5+36.36
D-3	9	b		S																			13.4	18" RCP	
D-3	9	c																				8.0		GD-1 INLET	18.70 Rt "SB-5" 5+83.06
D-3	9	d												1										REMOVE DI	11.93 Rt "SB-5" 5+83.17
D-3	9	e														88								REMOVE 18" CMP	
D-3	10	a																						JUNCTION STRUCTURE	140.94 Rt "A" 416+06.77
D-3	10	b																						DOUBLE 4'X4' RCB	
D-3	10	c																						CONCRETE HEADWALL	154.68 Rt "A" 416+92.37
D-3	10	d																						CONCRETE CHANNEL	
D-4	10	d																						CONCRETE CHANNEL	
D-4	10	e																						CONCRETE HEADWALL	130.07 Rt "A" 422+69.14
D-4	10	f	13	S																			1.1	48" RCP	
D-4	10	g																						CONCRETE ENCASEMENT	
D-4	10	h																						CONCRETE COLLAR	117.53 Rt "A" 422+68.99
D-3	10	i																						BIOSTRIP	
D-4	10	i																						BIOSTRIP	
D-3	10	j																						REINFORCED CONCRETE CHANNEL WALL	
D-4	10	j																						REINFORCED CONCRETE CHANNEL WALL	
D-3	10	k																		123				REMOVE CONCRETE CHANNEL	
D-4	10	k																		522				REMOVE CONCRETE CHANNEL	
D-3	11	a										0.95	6.47											HMAOD	
			13									0.95	6.5	1		88.0			645			12.0	21.6	SUB TOTAL	

(N) INFORMATION ONLY, NOT A SEPARATE BID ITEM

* FOR ADDITIONAL QUANTITIES, SEE SUMMARY OF QUANTITIES
** FOR ADDITIONAL QUANTITIES, SEE STAGE CONSTRUCTION QUANTITIES

DRAINAGE QUANTITIES
DQ-12

REVISED BY	DUC TRAN
DATE REVISED	8/10/09
CALCULATED-DESIGNED BY	RASHOD GIBSON
CHECKED BY	BROOKE RIVERA
CONSULTANT FUNCTIONAL SUPERVISOR	ANDRZEJ NOWAK

STATE OF CALIFORNIA - DEPARTMENT OF TRANSPORTATION
Caltrans

LAST REVISION DATE PLOTTED => 03-FEB-2010
08-10-09 TIME PLOTTED => 09:52

BORDER LAST REVISED 8/1/2008 | RELATIVE BORDER SCALE IS IN INCHES 0 1 2 3 | USERNAME => trmikesl DGN FILE => c07163id012.dgn | CU 12235 | EA 071631

Dist	COUNTY	ROUTE	POST MILES TOTAL PROJECT	SHEET No.	TOTAL SHEETS
12	Ora	22,405, 605	R0.3/R0.9, 22.3/24.0,3.0/R1.6	470	1929

REGISTERED CIVIL ENGINEER — 8/10/09 DATE

2-1-10
PLANS APPROVAL DATE

REGISTERED PROFESSIONAL ENGINEER
JENNIFER BROOKE RIVERA
No. C70332
Exp. 09/30/10
CIVIL
STATE OF CALIFORNIA

THE STATE OF CALIFORNIA OR ITS OFFICERS OR AGENTS SHALL NOT BE RESPONSIBLE FOR THE ACCURACY OR COMPLETENESS OF ELECTRONIC COPIES OF THIS PLAN SHEET.

AECOM
999 TOWN & COUNTRY RD
ORANGE, CA 92868

ORANGE COUNTY
TRANSPORTATION AUTHORITY
550 S. MAIN STREET
ORANGE, CA 92863-1584

DRAINAGE QUANTITIES

DRAINAGE PLAN SHEET No.	SYSTEM No.	UNIT	MINOR CONCRETE (MINOR STRUCTURE)	CLASS 1 CONCRETE (BIXBY CHANNEL)	STRUCTURAL CONCRETE (BOX CULVERT)	CONCRETE (DITCH LINING)	CLASS 3 AGGREGATE BASE	GRATED LINE DRAIN	(N) BIOSWALE	DITCH EXCAVATION	(N) BIOSTRIP	(N) GRATES			Misc IRON & STEEL **	BAR REINFORCING STEEL (CHANNEL)	BAR REINFORCING STEEL (BOX CULVERT)	(N) STRUCTURAL BACKFILL	12" CSP (0.079" THICK)	18" REINFORCED Conc PIPE	24" REINFORCED Conc PIPE	36" REINFORCED Conc PIPE	DESCRIPTION	STATION
												TYPE 24-12	TYPE 36R	COMBINATION CATCH BASIN										
			CY	CY	CY	CY	CY	LF	LF	CY	SF	EA	EA	EA	LB	LB	LB	CY	LF	LF	LF	LF		
D-3	12	a	1.8									2			634								GD-1 INLET	22.38 Rt "SB-5" 41+74.91
D-3	12	b																			45		24" RCP	
D-3	12	c	12.0																				CONCRETE ENCASEMENT	
D-3	12	d	1.9									2			634								GD-1 INLET	19.04 Rt "SB-5" 42+24.92
D-3	12	e																			46		24" RCP	
D-3	12	f	12.2																				CONCRETE ENCASEMENT	
D-3	12	g	2.0									2			634								GD-1 INLET	18.70 Rt "SB-5" 42+75.00
D-3	12	h																			34		24" RCP	
D-3	12	i	9.2																				CONCRETE ENCASEMENT	
D-3	12	j	2.3									2			634								GD-1 INLET	18.70 Rt "SB-5" 43+15.00
D-3	12	k																			8		24" RCP	
D-3	12	l	0.3																				JUNCTION STRUCTURE	26.66 Rt "SB-5" 43+16.60
D-3	13	a																					HMAOD	
D-3	14	a	2.2																				JUNCTION STRUCTURE	135.37 Rt "A" 417+50.24
D-3	14	b																			18		24" RCP	
D-3	14	c	0.9																				CONCRETE COLLAR	152.55 Rt "A" 417+50.47
D-4	16	a	2.2																				JUNCTION STRUCTURE	147.78 Rt "A" 420+75.35
D-4	16	b																			12		24" RCP	
D-4	16	c	0.9																				CONCRETE COLLAR	135.76 Rt "A" 420+75.13
			47.9									8			2536						163		SUB TOTAL	

(N) INFORMATION ONLY, NOT A SEPARATE BID ITEM

* FOR ADDITIONAL QUANTITIES, SEE SUMMARY OF QUANTITIES
** FOR ADDITIONAL QUANTITIES, SEE STAGE CONSTRUCTION QUANTITIES

DRAINAGE QUANTITIES
DQ-13

REVISED BY	DUC TRAN
DATE REVISED	8/10/09
CALCULATED-DESIGNED BY	RASHOD GIBSON
CHECKED BY	BROOKE RIVERA
CONSULTANT FUNCTIONAL SUPERVISOR	ANDRZEJ NOWAK

STATE OF CALIFORNIA - DEPARTMENT OF TRANSPORTATION
Caltrans

LAST REVISION DATE PLOTTED => 03-FEB-2010
08-10-09 TIME PLOTTED => 09:52

BORDER LAST REVISED 8/1/2008

RELATIVE BORDER SCALE IS IN INCHES 0 1 2 3

USERNAME => trmikesl
DGN FILE => c07163id013.dgn

CU 12235

EA 071631

Dist	COUNTY	ROUTE	POST MILES TOTAL PROJECT	SHEET No.	TOTAL SHEETS
12	Ora	22,405, 605	R0.3/R0.9, 22.3/24.0,3.0/R1.6	471	1929

REGISTERED CIVIL ENGINEER — 12/22/09 DATE

2-1-10
PLANS APPROVAL DATE

REGISTERED PROFESSIONAL ENGINEER
JENNIFER BROOKE RIVERA
No. C70332
Exp. 09/30/10
CIVIL
STATE OF CALIFORNIA

THE STATE OF CALIFORNIA OR ITS OFFICERS OR AGENTS SHALL NOT BE RESPONSIBLE FOR THE ACCURACY OR COMPLETENESS OF ELECTRONIC COPIES OF THIS PLAN SHEET.

AECOM
999 TOWN & COUNTRY RD
ORANGE, CA 92868

ORANGE COUNTY
TRANSPORTATION AUTHORITY
550 S. MAIN STREET
ORANGE, CA 92863-1584

DRAINAGE QUANTITIES

DRAINAGE PLAN SHEET No.	SYSTEM No.	UNIT	48" REINFORCED Conc PIPE	(N) PIPE JOINT CLASSIFICATION	FIELD LEAKAGE TESTING	16" WELDED STEEL PIPE (0.375" WALL THICKNESS)	24" WELDED STEEL PIPE (0.375" WALL THICKNESS)	18" AFES	24" AFES	ROCK SLOPE PROTECTION FABRIC	ROCK SLOPE PROTECTION (FACING, METHOD B)	HOT MIX ASPHALT *	PLACE HOT MIX ASPHALT (Misc AREA)	REMOVE DRAINAGE FACILITY	(N) REMOVE ACOD	REMOVE CULVERT	REMOVE REINFORED CONCRETE BOX CULVERT	REMOVE CONCRETE (HEADWALL)	REMOVE CONCRETE (DITCH)	REMOVE CONCRETE (CHANNEL)	(N) REMOVE EARTHEN SWALE	(N) HEIGHT OF INLET	(N) MAXIMUM COVER	DESCRIPTION	STATION
			LF		LF	LF	LF	EA	EA	SQYD	TON	TON	SQYD	EA	EA	LF	LF	CY	LF	CY	LF	LF	LF		
D-3	12	a																				3.4		GD-1 INLET	22.38 Rt "SB-5" 41+74.91
D-3	12	b		S																			1.1	24" RCP	
D-3	12	c																						CONCRETE ENCASEMENT	
D-3	12	d																				3.8		GD-1 INLET	19.04 Rt "SB-5" 42+24.92
D-3	12	e		S																			1.4	24" RCP	
D-3	12	f																						CONCRETE ENCASEMENT	
D-3	12	g																				4.1		GD-1 INLET	18.70 Rt "SB-5" 42+75.00
D-3	12	h		S																			2.4	24" RCP	
D-3	12	i																						CONCRETE ENCASEMENT	
D-3	12	j																				5.1		GD-1 INLET	18.70 Rt "SB-5" 43+15.00
D-3	12	k		S																			5.1	24" RCP	
D-3	12	l																						JUNCTION STRUCTURE	26.66 Rt "SB-5" 43+16.60
D-3	13	a										1.36	9.28											HMAOD	
D-3	14	a																						JUNCTION STRUCTURE	135.37 Rt "A" 417+50.24
D-3	14	b		S																			1.8	24" RCP	
D-3	14	c																						CONCRETE COLLAR	152.55 Rt "A" 417+50.47
D-4	16	a																						JUNCTION STRUCTURE	147.78 Rt "A" 420+75.35
D-4	16	b		S																			2	24" RCP	
D-4	16	c																						CONCRETE COLLAR	135.76 Rt "A" 420+75.13
												1.36	9.3									16.4	13.8	SUB TOTAL	

(N) INFORMATION ONLY, NOT A SEPARATE BID ITEM

* FOR ADDITIONAL QUANTITIES, SEE SUMMARY OF QUANTITIES
** FOR ADDITIONAL QUANTITIES, SEE STAGE CONSTRUCTION QUANTITIES

DRAINAGE QUANTITIES
DQ-14

REVISED BY	DUC TRAN
DATE REVISED	8/10/09
CALCULATED-DESIGNED BY	RASHOD GIBSON
CHECKED BY	BROOKE RIVERA
CONSULTANT FUNCTIONAL SUPERVISOR	ANDRZEJ NOWAK

STATE OF CALIFORNIA - DEPARTMENT OF TRANSPORTATION
Caltrans

LAST REVISION DATE PLOTTED => 03-FEB-2010
08-10-09 TIME PLOTTED => 09:52

Dist	COUNTY	ROUTE	POST MILES TOTAL PROJECT	SHEET No.	TOTAL SHEETS
12	Ora	22,405, 605	R0.3/R0.9, 22.3/24.0,3.0/R1.6	472	1929

REGISTERED CIVIL ENGINEER — 8/10/09 DATE

2-1-10
PLANS APPROVAL DATE

REGISTERED PROFESSIONAL ENGINEER
JENNIFER BROOKE RIVERA
No. C70332
Exp. 09/30/10
CIVIL
STATE OF CALIFORNIA

THE STATE OF CALIFORNIA OR ITS OFFICERS OR AGENTS SHALL NOT BE RESPONSIBLE FOR THE ACCURACY OR COMPLETENESS OF ELECTRONIC COPIES OF THIS PLAN SHEET.

AECOM
999 TOWN & COUNTRY RD
ORANGE, CA 92868

ORANGE COUNTY
TRANSPORTATION AUTHORITY
550 S. MAIN STREET
ORANGE, CA 92863-1584

DRAINAGE QUANTITIES

DRAINAGE PLAN SHEET No.	SYSTEM No.	UNIT	MINOR CONCRETE (MINOR STRUCTURE)	CLASS 1 CONCRETE (BIXBY CHANNEL)	STRUCTURAL CONCRETE (BOX CULVERT)	CONCRETE (DITCH LINING)	CLASS 3 AGGREGATE BASE	GRATED LINE DRAIN	(N) BIOSWALE	DITCH EXCAVATION	(N) BIOSTRIP	(N) GRATES TYPE 24-12	(N) GRATES TYPE 36R	(N) GRATES COMBINATION CATCH BASIN	Misc IRON & STEEL **	BAR REINFORCING STEEL (CHANNEL)	BAR REINFORCING STEEL (BOX CULVERT)	(N) STRUCTURAL BACKFILL	12" CSP (0.079" THICK)	18" REINFORCED Conc PIPE	24" REINFORCED Conc PIPE	36" REINFORCED Conc PIPE	DESCRIPTION	STATION
			CY	CY	CY	CY	CY	LF	LF	CY	SF	EA	EA	EA	LB	LB	LB	CY	LF	LF	LF	LF		
D-4	18	a	2.2									2			634								GD-1 INLET	154.57 Lt "A" 417+65.78
D-4	18	b																		87			18" RCP	
D-4	18	c	2.3									2			634								GD-1 INLET	146.64 Lt "A" 418+57.00
D-4	18	d																		91			18" RCP	
D-4	18	e						49															GRATED LINE DRAIN	142.71 Lt "A" 419+02.98
D-4	18	f	2.4									2			634								GD-1 INLET	138.70 Lt "A" 419+56.12
D-4	18	g																		39			18" RCP	
D-4	18	h	2.4									2			634								GD-1 INLET	134.82 Lt "A" 419+95.59
D-4	18	i																		38			18" RCP	
D-4	18	j	2.4									2			634								GD-1 INLET	131.08 Lt "A" 420+37.73
D-4	18	k																		86			18" RCP	
D-4	18	l	2.5									2			634								GD-1 INLET	123.56 Lt "A" 421+28.53
D-4	18	m																		134			18" RCP	
D-4	18	n	2.5									2			634								GD-1 INLET	123.66 Lt "A" 422+67.09
D-4	18	o																		29			18" RCP	
D-4	18	p	2.5									2			634								GD-1 INLET	123.61 Lt "A" 422+96.14
D-4	18	q						25															GRATED LINE DRAIN	123.63 Lt "A" 423+26.88
D-4	18	r																		32			18" RCP	
D-4	18	s	2.5									2			634								GD-1 INLET	123.63 Lt "A" 423+37.43
D-4	18	t																		158			18" RCP	
D-4	18	u	2.5									2			634								GD-1 INLET	123.70 Lt "A" 425+00.00
D-4	18	v																		25			18" RCP	
D-4	18	w	2.5									2			634								GD-1 INLET	123.70 Lt "A" 425+30.00
D-4	18	x																					REMOVE CONCRETE CHANNEL	
			26.7					74				22			6974					718			SUB TOTAL	

(N) INFORMATION ONLY, NOT A SEPARATE BID ITEM

* FOR ADDITIONAL QUANTITIES, SEE SUMMARY OF QUANTITIES
** FOR ADDITIONAL QUANTITIES, SEE STAGE CONSTRUCTION QUANTITIES

DRAINAGE QUANTITIES
DQ-15

REVISED BY	DUC TRAN
DATE REVISED	8/10/09
CALCULATED-DESIGNED BY	RASHOD GIBSON
CHECKED BY	BROOKE RIVERA
CONSULTANT FUNCTIONAL SUPERVISOR	ANDRZEJ NOWAK

STATE OF CALIFORNIA - DEPARTMENT OF TRANSPORTATION
Caltrans

LAST REVISION DATE PLOTTED => 03-FEB-2010
08-10-09 TIME PLOTTED => 11:00

Dist	COUNTY	ROUTE	POST MILES TOTAL PROJECT	SHEET No.	TOTAL SHEETS
12	Ora	22,405, 605	R0.3/R0.9, 22.3/24.0,3.0/R1.6	473	1929

REGISTERED CIVIL ENGINEER — 12/22/09 DATE

2-1-10
PLANS APPROVAL DATE

REGISTERED PROFESSIONAL ENGINEER
JENNIFER BROOKE RIVERA
No. C70332
Exp. 09/30/10
CIVIL
STATE OF CALIFORNIA

THE STATE OF CALIFORNIA OR ITS OFFICERS OR AGENTS SHALL NOT BE RESPONSIBLE FOR THE ACCURACY OR COMPLETENESS OF ELECTRONIC COPIES OF THIS PLAN SHEET.

AECOM
999 TOWN & COUNTRY RD
ORANGE, CA 92868

ORANGE COUNTY
TRANSPORTATION AUTHORITY
550 S. MAIN STREET
ORANGE, CA 92863-1584

DRAINAGE QUANTITIES

DRAINAGE PLAN SHEET No.	SYSTEM No.	UNIT	48" REINFORCED Conc PIPE	(N) PIPE JOINT CLASSIFICATION	FIELD LEAKAGE TESTING	16" WELDED STEEL PIPE (0.375" WALL THICKNESS)	24" WELDED STEEL PIPE (0.375" WALL THICKNESS)	18" AFES	24" AFES	ROCK SLOPE PROTECTION FABRIC	ROCK SLOPE PROTECTION (FACING, METHOD B)	HOT MIX ASPHALT *	PLACE HOT MIX ASPHALT (Misc AREA)	REMOVE DRAINAGE FACILITY	(N) REMOVE ACOD	REMOVE CULVERT	REMOVE REINFORED CONCRETE BOX CULVERT	REMOVE CONCRETE (HEADWALL)	REMOVE CONCRETE (DITCH)	REMOVE CONCRETE (CHANNEL)	(N) REMOVE EARTHEN SWALE	(N) HEIGHT OF INLET	(N) MAXIMUM COVER	DESCRIPTION	STATION
			LF		LF	LF	LF	EA	EA	SQYD	TON	TON	SQYD	EA	EA	LF	LF	CY	LF	CY	LF	LF	LF		
D-4	18	a																				4.9		GD-1 INLET	154.57 Lt "A" 417+65.78
D-4	18	b		S																			3.4	18" RCP	
D-4	18	c																				5.1		GD-1 INLET	146.64 Lt "A" 418+57.00
D-4	18	d		S																			3.4	18" RCP	
D-4	18	e																						GRATED LINE DRAIN	142.71 Lt "A" 419+02.98
D-4	18	f		S																		5.4		GD-1 INLET	138.70 Lt "A" 419+56.12
D-4	18	g		S																			3.7	18" RCP	
D-4	18	h																				5.5		GD-1 INLET	134.82 Lt "A" 419+95.59
D-4	18	i		S																			3.8	18" RCP	
D-4	18	j																				5.4		GD-1 INLET	131.08 Lt "A" 420+37.73
D-4	18	k		S																			4	18" RCP	
D-4	18	l																				5.7		GD-1 INLET	123.56 Lt "A" 421+28.53
D-4	18	m		S																			4.2	18" RCP	
D-4	18	n																				5.8		GD-1 INLET	123.66 Lt "A" 422+67.09
D-4	18	o		S																			4.2	18" RCP	
D-4	18	p																				5.8		GD-1 INLET	123.61 Lt "A" 422+96.14
D-4	18	q																						GRATED LINE DRAIN	123.63 Lt "A" 423+26.88
D-4	18	r		S (W)																			4	18" RCP	
D-4	18	s																				5.7		GD-1 INLET	123.63 Lt "A" 423+37.43
D-4	18	t		S																			4	18" RCP	
D-4	18	u																				5.7		GD-1 INLET	123.70 Lt "A" 425+00.00
D-4	18	v		S																			4	18" RCP	
D-4	18	w																				5.7		GD-1 INLET	123.70 Lt "A" 425+30.00
D-4	18	x																						REMOVE CONCRETE CHANNEL	
																				476					
																				476		60.7	38.7	SUB TOTAL	

(N) INFORMATION ONLY, NOT A SEPARATE BID ITEM

* FOR ADDITIONAL QUANTITIES, SEE SUMMARY OF QUANTITIES
** FOR ADDITIONAL QUANTITIES, SEE STAGE CONSTRUCTION QUANTITIES

DRAINAGE QUANTITIES
DQ-16

LAST REVISION DATE PLOTTED => 03-FEB-2010
08-10-09 TIME PLOTTED => 11:00

STATE OF CALIFORNIA - DEPARTMENT OF TRANSPORTATION
Caltrans

CONSULTANT FUNCTIONAL SUPERVISOR: ANDRZEJ NOWAK
CALCULATED-DESIGNED BY: RASHOD GIBSON
CHECKED BY: BROOKE RIVERA
REVISED BY: DUC TRAN
DATE REVISED: 8/10/09

BORDER LAST REVISED 8/1/2008

RELATIVE BORDER SCALE IS IN INCHES 0 1 2 3

USERNAME => trmnguye
DGN FILE => c071631d016.dgn

CU 12235

EA 071631

Dist	COUNTY	ROUTE	POST MILES TOTAL PROJECT	SHEET No.	TOTAL SHEETS
12	Ora	22,405, 605	R0.3/R0.9, 22.3/24.0,3.0/R1.6	474	1929

REGISTERED CIVIL ENGINEER — 8/10/09 DATE

2-1-10
PLANS APPROVAL DATE

REGISTERED PROFESSIONAL ENGINEER
JENNIFER BROOKE RIVERA
No. C70332
Exp. 09/30/10
CIVIL
STATE OF CALIFORNIA

THE STATE OF CALIFORNIA OR ITS OFFICERS OR AGENTS SHALL NOT BE RESPONSIBLE FOR THE ACCURACY OR COMPLETENESS OF ELECTRONIC COPIES OF THIS PLAN SHEET.

AECOM
999 TOWN & COUNTRY RD
ORANGE, CA 92868

ORANGE COUNTY
TRANSPORTATION AUTHORITY
550 S. MAIN STREET
ORANGE, CA 92863-1584

DRAINAGE QUANTITIES

DRAINAGE PLAN SHEET No.	SYSTEM No.	UNIT	MINOR CONCRETE (MINOR STRUCTURE)	CLASS 1 CONCRETE (BIXBY CHANNEL)	STRUCTURAL CONCRETE (BOX CULVERT)	CONCRETE (DITCH LINING)	CLASS 3 AGGREGATE BASE	GRATED LINE DRAIN	(N) BIOSWALE	DITCH EXCAVATION	(N) BIOSTRIP	(N) GRATES TYPE 24-12	(N) GRATES TYPE 36R	(N) GRATES COMBINATION CATCH BASIN	Misc IRON & STEEL **	BAR REINFORCING STEEL (CHANNEL)	BAR REINFORCING STEEL (BOX CULVERT)	(N) STRUCTURAL BACKFILL	12" CSP (0.079" THICK)	18" REINFORCED Conc PIPE	24" REINFORCED Conc PIPE	36" REINFORCED Conc PIPE	DESCRIPTION	STATION
			CY	CY	CY	CY	CY	LF	LF	CY	SF	EA	EA	EA	LB	LB	LB	CY	LF	LF	LF	LF		
D-4	19	a				35.5				158.7													CONCRETE CHANNEL	
D-5	19	a				38.9				173.6													CONCRETE CHANNEL	
D-5	19	b	4.0																				BOX CULVERT WINGWALL	145.15 Rt "A" 428+32.09
D-5	19	c			19.1																		5'X2' RCB	
D-4	19	d									5673.8												BIOSTRIP	
D-5	19	e									5350.4												BIOSTRIP	
D-4	20	a	2.2																				JUNCTION STRUCTURE	147.67 Rt "A" 424+29.10
D-4	20	b																			30		24" RCP	
D-4	20	c	2.7																				CONCRETE ENCASEMENT	
D-4	20	d	0.9																				CONCRETE COLLAR	118.53 Rt "A" 424+28.05
D-5	21	a		106.4			194.4										11435						CONCRETE CHANNEL	
D-6	21	a		989.4			1807.4										106371						CONCRETE CHANNEL	
D-7	21	a		554			1012.2										59565						CONCRETE CHANNEL	
D-8	21	a		433.3			791.4										46589						CONCRETE CHANNEL	
D-5	21	b		3053.0			502.9			9581.0					1323	272865	138500	5790					9' x 6' RCB	
D-5	21	c		454.9			162.0										48906						CONCRETE CHANNEL	
D-5	21	d					277.3																ACCESS ROAD GRAVEL PAVING	
D-5	21	e																					REMOVE CONCRETE CHANNEL	
			9.9	5591.0	19.1	74.4	4747.6			9913.3	11024.2				1323	272865	411365	5790			30		SUB TOTAL	

(N) INFORMATION ONLY, NOT A SEPARATE BID ITEM

* FOR ADDITIONAL QUANTITIES, SEE SUMMARY OF QUANTITIES
** FOR ADDITIONAL QUANTITIES, SEE STAGE CONSTRUCTION QUANTITIES

DRAINAGE QUANTITIES
DQ-17

REVISED BY: DUC TRAN — DATE REVISED: 8/10/09
CALCULATED-DESIGNED BY: RASHOD GIBSON
CHECKED BY: BROOKE RIVERA
CONSULTANT FUNCTIONAL SUPERVISOR: ANDRZEJ NOWAK
STATE OF CALIFORNIA - DEPARTMENT OF TRANSPORTATION

LAST REVISION DATE PLOTTED => 03-FEB-2010
TIME PLOTTED => 11:00
08-10-09

Dist	COUNTY	ROUTE	POST MILES TOTAL PROJECT	SHEET No.	TOTAL SHEETS
12	Ora	22,405, 605	R0.3/R0.9, 22.3/24.0,3.0/R1.6	475	1929

REGISTERED CIVIL ENGINEER — 12/22/09 DATE

JENNIFER BROOKE RIVERA No. C70332 Exp. 09/30/10 CIVIL — REGISTERED PROFESSIONAL ENGINEER — STATE OF CALIFORNIA

2-1-10
PLANS APPROVAL DATE

THE STATE OF CALIFORNIA OR ITS OFFICERS OR AGENTS SHALL NOT BE RESPONSIBLE FOR THE ACCURACY OR COMPLETENESS OF ELECTRONIC COPIES OF THIS PLAN SHEET.

AECOM
999 TOWN & COUNTRY RD
ORANGE, CA 92868

ORANGE COUNTY
TRANSPORTATION AUTHORITY
550 S. MAIN STREET
ORANGE, CA 92863-1584

DRAINAGE QUANTITIES

DRAINAGE PLAN SHEET No.	SYSTEM No.	UNIT	48" REINFORCED Conc PIPE	(N) PIPE JOINT CLASSIFICATION	FIELD LEAKAGE TESTING	16" WELDED STEEL PIPE (0.375" WALL THICKNESS)	24" WELDED STEEL PIPE (0.375" WALL THICKNESS)	18" AFES	24" AFES	ROCK SLOPE PROTECTION FABRIC	ROCK SLOPE PROTECTION (FACING, METHOD B)	HOT MIX ASPHALT *	PLACE HOT MIX ASPHALT (Misc AREA)	REMOVE DRAINAGE FACILITY	(N) REMOVE ACOD	REMOVE CULVERT	REMOVE REINFORED CONCRETE BOX CULVERT	REMOVE CONCRETE (HEADWALL)	REMOVE CONCRETE (DITCH)	REMOVE CONCRETE (CHANNEL)	(N) REMOVE EARTHEN SWALE	(N) HEIGHT OF INLET	(N) MAXIMUM COVER	DESCRIPTION	STATION
			LF		LF	LF	LF	EA	EA	SQYD	TON	TON	SQYD	EA	EA	LF	LF	CY	LF	CY	LF	LF	LF		
D-4	19	a																						CONCRETE CHANNEL	
D-5	19	a																						CONCRETE CHANNEL	
D-5	19	b																						BOX CULVERT WINGWALL	145.15 Rt "A" 428+32.09
D-5	19	c			7																			5'X2' RCB	
D-4	19	d																						BIOSTRIP	
D-5	19	e																						BIOSTRIP	
D-4	20	a																						JUNCTION STRUCTURE	147.67 Rt "A" 424+29.10
D-4	20	b		S																			1.2	24" RCP	
D-4	20	c																						CONCRETE ENCASEMENT	
D-4	20	d																						CONCRETE COLLAR	118.53 Rt "A" 424+28.05
D-5	21	a								354.9														CONCRETE CHANNEL	
D-6	21	a								3299.8														CONCRETE CHANNEL	
D-7	21	a								1847.9														CONCRETE CHANNEL	
D-8	21	a								1444.9														CONCRETE CHANNEL	
D-5	21	b								960.0														9' x 6' RCB	
D-5	21	c								298.6														CONCRETE CHANNEL	
D-5	21	d																						ACCESS ROAD GRAVEL PAVING	
D-5	21	e																			473			REMOVE CONCRETE CHANNEL	
D-5	21	f															71.0							REMOVE 8' x 5' RCB	
					7					8206.0							71.0			473			1.2	SUB TOTAL	

(N) INFORMATION ONLY, NOT A SEPARATE BID ITEM

* FOR ADDITIONAL QUANTITIES, SEE SUMMARY OF QUANTITIES
** FOR ADDITIONAL QUANTITIES, SEE STAGE CONSTRUCTION QUANTITIES

DRAINAGE QUANTITIES
DQ-18

REVISED BY: DUC TRAN — DATE REVISED: 8/10/09
CALCULATED-DESIGNED BY: RASHOD GIBSON
CHECKED BY: BROOKE RIVERA
CONSULTANT FUNCTIONAL SUPERVISOR: ANDRZEJ NOWAK
STATE OF CALIFORNIA - DEPARTMENT OF TRANSPORTATION
Caltrans

LAST REVISION DATE PLOTTED => 03-FEB-2010
TIME PLOTTED => 11:00
08-10-09

BORDER LAST REVISED 8/1/2008
RELATIVE BORDER SCALE IS IN INCHES 0 1 2 3
USERNAME => trmnguye
DGN FILE => c071631d018.dgn
CU 12235
EA 071631

Dist	COUNTY	ROUTE	POST MILES TOTAL PROJECT	SHEET No.	TOTAL SHEETS
12	Ora	22,405, 605	R0.3/R0.9, 22.3/24.0,3.0/R1.6	476	1929

REGISTERED CIVIL ENGINEER — 8/10/09 DATE

2-1-10
PLANS APPROVAL DATE

REGISTERED PROFESSIONAL ENGINEER
JENNIFER BROOKE RIVERA
No. C70332
Exp. 09/30/10
CIVIL
STATE OF CALIFORNIA

THE STATE OF CALIFORNIA OR ITS OFFICERS OR AGENTS SHALL NOT BE RESPONSIBLE FOR THE ACCURACY OR COMPLETENESS OF ELECTRONIC COPIES OF THIS PLAN SHEET.

AECOM
999 TOWN & COUNTRY RD
ORANGE, CA 92868

ORANGE COUNTY
TRANSPORTATION AUTHORITY
550 S. MAIN STREET
ORANGE, CA 92863-1584

DRAINAGE QUANTITIES

DRAINAGE PLAN SHEET No.	SYSTEM No.	UNIT	MINOR CONCRETE (MINOR STRUCTURE) CY	CLASS 1 CONCRETE (BIXBY CHANNEL) CY	STRUCTURAL CONCRETE (BOX CULVERT) CY	CONCRETE (DITCH LINING) CY	CLASS 3 AGGREGATE BASE CY	GRATED LINE DRAIN LF	(N) BIOSWALE LF	DITCH EXCAVATION CY	(N) BIOSTRIP SF	(N) GRATES TYPE 24-12 EA	(N) GRATES TYPE 36R EA	(N) GRATES COMBINATION CATCH BASIN EA	Misc IRON & STEEL ** LB	BAR REINFORCING STEEL (CHANNEL) LB	BAR REINFORCING STEEL (BOX CULVERT) LB	(N) STRUCTURAL BACKFILL CY	12" CSP (0.079" THICK) LF	18" REINFORCED Conc PIPE LF	24" REINFORCED Conc PIPE LF	36" REINFORCED Conc PIPE LF	DESCRIPTION	STATION
D-5	22	a	2.2																				JUNCTION STRUCTURE	145.19 Rt "A" 428+25.18
D-5	22	b																			21		24" RCP	
D-5	22	c	2.0									2			634								GD-1 INLET	109.93 Rt "A" 428+24.87
D-5	22	d																			5		24" RCP	
D-5	22	e	1.1																				CONCRETE ENCASEMENT	
D-5	22	f	0.9																				CONCRETE COLLAR	117.99 Rt "A" 428+24.74
D-5	23	a	0.6																				JUNCTION STRUCTURE	13.33 Lt "OR" 10+01.71
D-5	23	b																			33		24" RCP	
D-5	23	c	1.7									1			317								G1 INLET	
D-5																								
D-5	23A	a	0.4																				JUNCTION STRUCTURE	24.13 Rt "OR" 15+15.45
D-5	23A	b																		46			18" RCP	
D-5	23A	c	3.3																				CONCRETE ENCASEMENT	
D-5	23A	d	0.6									2			634								GD-1 INLET	20.70 Lt "OR" 15+30.00
			12.8									5			1585					46	59		SUB TOTAL	

(N) INFORMATION ONLY, NOT A SEPARATE BID ITEM

* FOR ADDITIONAL QUANTITIES, SEE SUMMARY OF QUANTITIES
** FOR ADDITIONAL QUANTITIES, SEE STAGE CONSTRUCTION QUANTITIES

DRAINAGE QUANTITIES
DQ-19

REVISED BY	DUC TRAN
DATE REVISED	8/10/09
CALCULATED-DESIGNED BY	RASHOD GIBSON
CHECKED BY	BROOKE RIVERA
CONSULTANT FUNCTIONAL SUPERVISOR	ANDRZEJ NOWAK

STATE OF CALIFORNIA - DEPARTMENT OF TRANSPORTATION
Caltrans

LAST REVISION DATE PLOTTED => 03-FEB-2010
08-10-09 TIME PLOTTED => 11:00

BORDER LAST REVISED 8/1/2008

RELATIVE BORDER SCALE IS IN INCHES 0 1 2 3

USERNAME => trmnguye
DGN FILE => c071631d019.dgn

CU 12235

EA 071631

Dist	COUNTY	ROUTE	POST MILES TOTAL PROJECT	SHEET No.	TOTAL SHEETS
12	Ora	22,405, 605	R0.3/R0.9, 22.3/24.0,3.0/R1.6	477	1929

REGISTERED CIVIL ENGINEER — 12/22/09 DATE

2-1-10
PLANS APPROVAL DATE

REGISTERED PROFESSIONAL ENGINEER
JENNIFER BROOKE RIVERA
No. C70332
Exp. 09/30/10
CIVIL
STATE OF CALIFORNIA

THE STATE OF CALIFORNIA OR ITS OFFICERS OR AGENTS SHALL NOT BE RESPONSIBLE FOR THE ACCURACY OR COMPLETENESS OF ELECTRONIC COPIES OF THIS PLAN SHEET.

AECOM
999 TOWN & COUNTRY RD
ORANGE, CA 92868

ORANGE COUNTY
TRANSPORTATION AUTHORITY
550 S. MAIN STREET
ORANGE, CA 92863-1584

DRAINAGE QUANTITIES

DRAINAGE PLAN SHEET No.	SYSTEM No.	UNIT	48" REINFORCED Conc PIPE	(N) PIPE JOINT CLASSIFICATION	FIELD LEAKAGE TESTING	16" WELDED STEEL PIPE (0.375" WALL THICKNESS)	24" WELDED STEEL PIPE (0.375" WALL THICKNESS)	18" AFES	24" AFES	ROCK SLOPE PROTECTION FABRIC	ROCK SLOPE PROTECTION (FACING, METHOD B)	HOT MIX ASPHALT *	PLACE HOT MIX ASPHALT (Misc AREA)	REMOVE DRAINAGE FACILITY	(N) REMOVE ACOD	REMOVE CULVERT	REMOVE REINFORED CONCRETE BOX CULVERT	REMOVE CONCRETE (HEADWALL)	REMOVE CONCRETE (DITCH)	REMOVE CONCRETE (CHANNEL)	(N) REMOVE EARTHEN SWALE	(N) HEIGHT OF INLET	(N) MAXIMUM COVER	DESCRIPTION	STATION
			LF		LF	LF	LF	EA	EA	SQYD	TON	TON	SQYD	EA	EA	LF	LF	CY	LF	CY	LF	LF	LF		
D-5	22	a																						JUNCTION STRUCTURE	145.19 Rt "A" 428+25.18
D-5	22	b		S																			2	24" RCP	
D-5	22	c																				4.2		GD-1 INLET	109.93 Rt "A" 428+24.87
D-5	22	d		S																			1.8	24" RCP	
D-5	22	e																						CONCRETE ENCASEMENT	
D-5	22	f																						CONCRETE COLLAR	117.99 Rt "A" 428+24.74
D-5	23	a																						JUNCTION STRUCTURE	13.33 Lt "OR" 10+01.71
D-5	23	b		S																			5.1	24" RCP	
D-5	23	c																						G1 INLET	
D-5	23A	a																						JUNCTION STRUCTURE	24.13 Rt "OR" 15+15.45
D-5	23A	b		S																			4	18" RCP	
D-5	23A	c																						CONCRETE ENCASEMENT	
D-5	23A	d																				2.7		GD-1 INLET	20.70 Lt "OR" 15+30.00
																						6.9	12.9	SUB TOTAL	

(N) INFORMATION ONLY, NOT A SEPARATE BID ITEM

* FOR ADDITIONAL QUANTITIES, SEE SUMMARY OF QUANTITIES
** FOR ADDITIONAL QUANTITIES, SEE STAGE CONSTRUCTION QUANTITIES

DRAINAGE QUANTITIES
DQ-20

REVISED BY: DUC TRAN — DATE REVISED: 8/10/09
CALCULATED-DESIGNED BY: RASHOD GIBSON
CHECKED BY: BROOKE RIVERA
CONSULTANT FUNCTIONAL SUPERVISOR: ANDRZEJ NOWAK
STATE OF CALIFORNIA - DEPARTMENT OF TRANSPORTATION
Caltrans

LAST REVISION DATE PLOTTED => 03-FEB-2010
TIME PLOTTED => 11:01
08-10-09

BORDER LAST REVISED 8/1/2008
RELATIVE BORDER SCALE IS IN INCHES 0 1 2 3
USERNAME => trmnguye
DGN FILE => c071631d020.dgn
CU 12235
EA 071631

Dist	COUNTY	ROUTE	POST MILES TOTAL PROJECT	SHEET No.	TOTAL SHEETS
12	Ora	22,405, 605	R0.3/R0.9, 22.3/24.0,3.0/R1.6	478	1929

REGISTERED CIVIL ENGINEER — DATE 8/10/09

2-1-10
PLANS APPROVAL DATE

REGISTERED PROFESSIONAL ENGINEER
JENNIFER BROOKE RIVERA
No. C70332
Exp. 09/30/10
CIVIL
STATE OF CALIFORNIA

THE STATE OF CALIFORNIA OR ITS OFFICERS OR AGENTS SHALL NOT BE RESPONSIBLE FOR THE ACCURACY OR COMPLETENESS OF ELECTRONIC COPIES OF THIS PLAN SHEET.

AECOM
999 TOWN & COUNTRY RD
ORANGE, CA 92868

ORANGE COUNTY
TRANSPORTATION AUTHORITY
550 S. MAIN STREET
ORANGE, CA 92863-1584

DRAINAGE QUANTITIES

DRAINAGE PLAN SHEET No.	SYSTEM No.	UNIT	MINOR CONCRETE (MINOR STRUCTURE) CY	CLASS 1 CONCRETE (BIXBY CHANNEL) CY	STRUCTURAL CONCRETE (BOX CULVERT) CY	CONCRETE (DITCH LINING) CY	CLASS 3 AGGREGATE BASE CY	GRATED LINE DRAIN LF	(N) BIOSWALE LF	DITCH EXCAVATION CY	(N) BIOSTRIP SF	(N) GRATES TYPE 24-12 EA	GRATES TYPE 36R EA	COMBINATION CATCH BASIN EA	Misc IRON & STEEL ** LB	BAR REINFORCING STEEL (CHANNEL) LB	BAR REINFORCING STEEL (BOX CULVERT) LB	(N) STRUCTURAL BACKFILL CY	12" CSP (0.079" THICK) LF	18" REINFORCED Conc PIPE LF	24" REINFORCED Conc PIPE LF	36" REINFORCED Conc PIPE LF	DESCRIPTION	STATION
D-5	24	a	7.5									2			634								GD-1 INLET	26.85 Lt "OR" 8+08.00
D-5	24	b																			26		24" RCP	
D-5	24	c	2.2																				CONCRETE ENCASEMENT	
D-5	24	d	0.3																				JUNCTION STRUCTURE	7.47 Rt "OR" 8+07.19
D-5	24	e	0.3																				JUNCTION STRUCTURE	9.42 Rt "OR" 8+07.26
D-5	24	f																			38		24" RCP	
D-5	24	g	2.7									2			634								GD-1 INLET	13.31 Rt "A-2" 38+10.92
D-5	24	h																			20		24" RCP	
D-5	24	i	5.2																				CONCRETE ENCASEMENT	
D-5	24	j	2.1									2			634								GD-1 INLET	11.41 Rt "A-2" 38+35.81
D-5	24A	a	0.4																				JUNCTION STRUCTURE	18.13 Rt "OR" 10+93.52
D-5	24A	b																			21		24" RCP	
D-5	24A	c	0.9																				CONCRETE COLLAR	38.79 Rt "OR" 10+98.52
			21.6									6			1902						105		SUB TOTAL	

(N) INFORMATION ONLY, NOT A SEPARATE BID ITEM

* FOR ADDITIONAL QUANTITIES, SEE SUMMARY OF QUANTITIES
** FOR ADDITIONAL QUANTITIES, SEE STAGE CONSTRUCTION QUANTITIES

DRAINAGE QUANTITIES
DQ-21

	REVISED BY	DUC TRAN
	DATE REVISED	8/10/09
CALCULATED-DESIGNED BY	RASHOD GIBSON	
CHECKED BY	BROOKE RIVERA	

CONSULTANT FUNCTIONAL SUPERVISOR: ANDRZEJ NOWAK

STATE OF CALIFORNIA - DEPARTMENT OF TRANSPORTATION
Caltrans

LAST REVISION DATE PLOTTED => 03-FEB-2010
08-10-09 TIME PLOTTED => 11:01

BORDER LAST REVISED 8/1/2008

RELATIVE BORDER SCALE IS IN INCHES 0 1 2 3

USERNAME => trmnguye
DGN FILE => c071631d021.dgn

CU 12235

EA 071631

Dist	COUNTY	ROUTE	POST MILES TOTAL PROJECT	SHEET No.	TOTAL SHEETS
12	Ora	22,405, 605	R0.3/R0.9, 22.3/24.0,3.0/R1.6	479	1929

REGISTERED CIVIL ENGINEER — 12/22/09 DATE

2-1-10
PLANS APPROVAL DATE

REGISTERED PROFESSIONAL ENGINEER
JENNIFER BROOKE RIVERA
No. C70332
Exp. 09/30/10
CIVIL
STATE OF CALIFORNIA

THE STATE OF CALIFORNIA OR ITS OFFICERS OR AGENTS SHALL NOT BE RESPONSIBLE FOR THE ACCURACY OR COMPLETENESS OF ELECTRONIC COPIES OF THIS PLAN SHEET.

AECOM
999 TOWN & COUNTRY RD
ORANGE, CA 92868

ORANGE COUNTY
TRANSPORTATION AUTHORITY
550 S. MAIN STREET
ORANGE, CA 92863-1584

DRAINAGE QUANTITIES

DRAINAGE PLAN SHEET No.	SYSTEM No.	UNIT	48" REINFORCED Conc PIPE	(N) PIPE JOINT CLASSIFICATION	FIELD LEAKAGE TESTING	16" WELDED STEEL PIPE (0.375" WALL THICKNESS)	24" WELDED STEEL PIPE (0.375" WALL THICKNESS)	18" AFES	24" AFES	ROCK SLOPE PROTECTION FABRIC	ROCK SLOPE PROTECTION (FACING, METHOD B)	HOT MIX ASPHALT *	PLACE HOT MIX ASPHALT (Misc AREA)	REMOVE DRAINAGE FACILITY	(N) REMOVE ACOD	REMOVE CULVERT	REMOVE REINFORED CONCRETE BOX CULVERT	REMOVE CONCRETE (HEADWALL)	REMOVE CONCRETE (DITCH)	REMOVE CONCRETE (CHANNEL)	(N) REMOVE EARTHEN SWALE	(N) HEIGHT OF INLET	(N) MAXIMUM COVER	DESCRIPTION	STATION
			LF		LF	LF	LF	EA	EA	SQYD	TON	TON	SQYD	EA	EA	LF	LF	CY	LF	CY	LF	LF	LF		
D-5	24	a																				4.0		GD-1 INLET	26.85 Lt "OR" 8+08.00
D-5	24	b		S																			6.4	24" RCP	
D-5	24	c																						CONCRETE ENCASEMENT	
D-5	24	d																						JUNCTION STRUCTURE	7.47 Rt "OR" 8+07.19
D-5	24	e																						JUNCTION STRUCTURE	9.42 Rt "OR" 8+07.26
D-5	24	f		S																			6.5	24" RCP	
D-5	24	g																				6.2		GD-1 INLET	13.31 Rt "A-2" 38+10.92
D-5	24	h		S																			2.7	24" RCP	
D-5	24	i																						CONCRETE ENCASEMENT	
D-5	24	j																				4.5		GD-1 INLET	11.41 Rt "A-2" 38+35.81
D-5	24A	a																						JUNCTION STRUCTURE	18.13 Rt "OR" 10+93.52
D-5	24A	b		S																			4.8	24" RCP	
D-5	24A	c																						CONCRETE COLLAR	38.79 Rt "OR" 10+98.52
																						14.7	20.4	SUB TOTAL	

(N) INFORMATION ONLY, NOT A SEPARATE BID ITEM

* FOR ADDITIONAL QUANTITIES, SEE SUMMARY OF QUANTITIES
** FOR ADDITIONAL QUANTITIES, SEE STAGE CONSTRUCTION QUANTITIES

DRAINAGE QUANTITIES
DQ-22

CALCULATED-DESIGNED BY: RASHOD GIBSON
CHECKED BY: BROOKE RIVERA
REVISED BY: DUC TRAN
DATE REVISED: 8/10/09
CONSULTANT FUNCTIONAL SUPERVISOR: ANDRZEJ NOWAK
STATE OF CALIFORNIA - DEPARTMENT OF TRANSPORTATION
Caltrans

LAST REVISION | DATE PLOTTED => 03-FEB-2010
08-10-09 | TIME PLOTTED => 11:01

BORDER LAST REVISED 8/1/2008
RELATIVE BORDER SCALE IS IN INCHES 0 1 2 3
USERNAME => trmnguye
DGN FILE => c071631d022.dgn
CU 12235
EA 071631

Dist	COUNTY	ROUTE	POST MILES TOTAL PROJECT	SHEET No.	TOTAL SHEETS
12	Ora	22,405, 605	R0.3/R0.9, 22.3/24.0,3.0/R1.6	480	1929

REGISTERED CIVIL ENGINEER — 8/10/09 DATE

2-1-10
PLANS APPROVAL DATE

REGISTERED PROFESSIONAL ENGINEER
JENNIFER BROOKE RIVERA
No. C70332
Exp. 09/30/10
CIVIL
STATE OF CALIFORNIA

THE STATE OF CALIFORNIA OR ITS OFFICERS OR AGENTS SHALL NOT BE RESPONSIBLE FOR THE ACCURACY OR COMPLETENESS OF ELECTRONIC COPIES OF THIS PLAN SHEET.

AECOM
999 TOWN & COUNTRY RD
ORANGE, CA 92868

ORANGE COUNTY
TRANSPORTATION AUTHORITY
550 S. MAIN STREET
ORANGE, CA 92863-1584

DRAINAGE QUANTITIES

DRAINAGE PLAN SHEET No.	SYSTEM No.	UNIT	MINOR CONCRETE (MINOR STRUCTURE)	CLASS 1 CONCRETE (BIXBY CHANNEL)	STRUCTURAL CONCRETE (BOX CULVERT)	CONCRETE (DITCH LINING)	CLASS 3 AGGREGATE BASE	GRATED LINE DRAIN	(N) BIOSWALE	DITCH EXCAVATION	(N) BIOSTRIP	(N) GRATES TYPE 24-12	(N) GRATES TYPE 36R	(N) GRATES COMBINATION CATCH BASIN	Misc IRON & STEEL **	BAR REINFORCING STEEL (CHANNEL)	BAR REINFORCING STEEL (BOX CULVERT)	(N) STRUCTURAL BACKFILL	12" CSP (0.079" THICK)	18" REINFORCED Conc PIPE	24" REINFORCED Conc PIPE	36" REINFORCED Conc PIPE	DESCRIPTION	STATION
			CY	CY	CY	CY	CY	LF	LF	CY	SF	EA	EA	EA	LB	LB	LB	CY	LF	LF	LF	LF		
D-5	25	a						80															GRATED LINE DRAIN	
D-5	25	b	2.5									2			634								GD-1 INLET	127.00 Rt "A" 430+86.07
D-5	25	c																			85		24" RCP	
D-5	25	d						80															GRATED LINE DRAIN	
D-5	25	e	2.7									2			634								GD-1 INLET	133.77 Rt "A" 431+75.00
D-5	25	f																			70		24" RCP	
D-5	25	g	0.2																				JUNCTION STRUCTURE	17.20 Rt "OR" 70+95.77
D-5	25	h			109.7																		2'X2' RCB	
D-5	25	i	3.5																				JUNCTION STRUCTURE	
D-5	25	j			5.9																		2'X2' RCB	
D-5	25	k	3.5																				JUNCTION STRUCTURE	
D-5	25	l			10.2																		2'X2' RCB	
D-6	25	l			100.3																		2'X2' RCB	
D-6	25A	a								69.3													EARTHEN SWALE	
D-5	26	a				128.0				329.4													CONCRETE CHANNEL	
D-5	26	b	0.6																				CONCRETE HEADWALL	
D-5	26	c				20.1																	2'X3' RCB	
D-5	26	d	0.6																				CONCRETE HEADWALL	
D-5	26	e				24.3				62.6													CONCRETE CHANNEL	
D-6	26	e				142.7				367.2													CONCRETE CHANNEL	
D-6	26	f	7.7																				JUNCTION STRUCTURE	291.79 Lt "A" 448+39.30
D-6	26	g																					REMOVE CONCRETE CHANNEL	
D-6	26	h																					REMOVE CONCRETE CHANNEL	
			21.3		226.0	315.1		160		828.5		4			1268						154		SUB TOTAL	

(N) INFORMATION ONLY, NOT A SEPARATE BID ITEM

* FOR ADDITIONAL QUANTITIES, SEE SUMMARY OF QUANTITIES
** FOR ADDITIONAL QUANTITIES, SEE STAGE CONSTRUCTION QUANTITIES

DRAINAGE QUANTITIES
DQ-23

REVISED BY	DUC TRAN
DATE REVISED	8/10/09
CALCULATED-DESIGNED BY	RASHOD GIBSON
CHECKED BY	BROOKE RIVERA
CONSULTANT FUNCTIONAL SUPERVISOR	ANDRZEJ NOWAK

STATE OF CALIFORNIA - DEPARTMENT OF TRANSPORTATION
Caltrans

LAST REVISION DATE PLOTTED => 03-FEB-2010
08-10-09 TIME PLOTTED => 11:01

BORDER LAST REVISED 8/1/2008 | RELATIVE BORDER SCALE IS IN INCHES 0 1 2 3 | USERNAME => trmnguye DGN FILE => c071631d023.dgn | CU 12235 | EA 071631

Dist	COUNTY	ROUTE	POST MILES TOTAL PROJECT	SHEET No.	TOTAL SHEETS
12	Ora	22,405, 605	R0.3/R0.9, 22.3/24.0,3.0/R1.6	481	1929

REGISTERED CIVIL ENGINEER — 12/22/09 DATE

2-1-10
PLANS APPROVAL DATE

REGISTERED PROFESSIONAL ENGINEER
JENNIFER BROOKE RIVERA
No. C70332
Exp. 09/30/10
CIVIL
STATE OF CALIFORNIA

THE STATE OF CALIFORNIA OR ITS OFFICERS OR AGENTS SHALL NOT BE RESPONSIBLE FOR THE ACCURACY OR COMPLETENESS OF ELECTRONIC COPIES OF THIS PLAN SHEET.

AECOM
999 TOWN & COUNTRY RD
ORANGE, CA 92868

ORANGE COUNTY
TRANSPORTATION AUTHORITY
550 S. MAIN STREET
ORANGE, CA 92863-1584

DRAINAGE QUANTITIES

DRAINAGE PLAN SHEET No.	SYSTEM No.	UNIT	(N) 48" REINFORCED Conc PIPE	(N) PIPE JOINT CLASSIFICATION	FIELD LEAKAGE TESTING	16" WELDED STEEL PIPE (0.375" WALL THICKNESS)	24" WELDED STEEL PIPE (0.375" WALL THICKNESS)	18" AFES	24" AFES	ROCK SLOPE PROTECTION FABRIC	ROCK SLOPE PROTECTION (FACING, METHOD B)	HOT MIX ASPHALT *	PLACE HOT MIX ASPHALT (Misc AREA)	REMOVE DRAINAGE FACILITY	(N) REMOVE ACOD	REMOVE CULVERT	REMOVE REINFORED CONCRETE BOX CULVERT	REMOVE CONCRETE (HEADWALL)	REMOVE CONCRETE (DITCH)	REMOVE CONCRETE (CHANNEL)	(N) REMOVE EARTHEN SWALE	(N) HEIGHT OF INLET	(N) MAXIMUM COVER	DESCRIPTION	STATION
			LF		LF	LF	LF	EA	EA	SQYD	TON	TON	SQYD	EA	EA	LF	LF	CY	LF	CY	LF	LF	LF		
D-5	25	a																						GRATED LINE DRAIN	
D-5	25	b																					5.8	GD-1 INLET	127.00 Rt "A" 430+86.07
D-5	25	c																						24" RCP	
D-5	25	d																						GRATED LINE DRAIN	
D-5	25	e																					6.3	GD-1 INLET	133.77 Rt "A" 431+75.00
D-5	25	f																						24" RCP	
D-5	25	g																						JUNCTION STRUCTURE	17.20 Rt "OR" 70+95.77
D-5	25	h																						2'X2' RCB	
D-5	25	i																						JUNCTION STRUCTURE	
D-5	25	j																						2'X2' RCB	
D-5	25	k																						JUNCTION STRUCTURE	
D-5	25	l			59																			2'X2' RCB	
D-6	25	l			584																			2'X2' RCB	
D-6	25A	a																						EARTHEN SWALE	
D-5	26	a																						CONCRETE CHANNEL	
D-5	26	b																						CONCRETE HEADWALL	
D-5	26	c																						2'X3' RCB	
D-5	26	d																						CONCRETE HEADWALL	
D-5	26	e																						CONCRETE CHANNEL	
D-6	26	e																						CONCRETE CHANNEL	
D-6	26	f																						JUNCTION STRUCTURE	291.79 Lt "A" 448+39.30
D-6	26	g																	1300					REMOVE CONCRETE CHANNEL	
D-6	26	h																	1077					REMOVE CONCRETE CHANNEL	
					643														2377			12.1	9.0	SUB TOTAL	

(N) INFORMATION ONLY, NOT A SEPARATE BID ITEM

* FOR ADDITIONAL QUANTITIES, SEE SUMMARY OF QUANTITIES
** FOR ADDITIONAL QUANTITIES, SEE STAGE CONSTRUCTION QUANTITIES

DRAINAGE QUANTITIES
DQ-24

REVISED BY	DUC TRAN
DATE REVISED	8/10/09
CALCULATED-DESIGNED BY	RASHOD GIBSON
CHECKED BY	BROOKE RIVERA
CONSULTANT FUNCTIONAL SUPERVISOR	ANDRZEJ NOWAK

STATE OF CALIFORNIA - DEPARTMENT OF TRANSPORTATION
Caltrans

LAST REVISION DATE PLOTTED => 03-FEB-2010
08-10-09 TIME PLOTTED => 11:01

BORDER LAST REVISED 8/1/2008 | RELATIVE BORDER SCALE IS IN INCHES 0 1 2 3 | USERNAME => trmnguye DGN FILE => c071631d024.dgn | CU 12235 | EA 071631

Dist	COUNTY	ROUTE	POST MILES TOTAL PROJECT	SHEET No.	TOTAL SHEETS
12	Ora	22,405, 605	R0.3/R0.9, 22.3/24.0,3.0/R1.6	482	1929

REGISTERED CIVIL ENGINEER — 8/10/09 DATE

2-1-10
PLANS APPROVAL DATE

REGISTERED PROFESSIONAL ENGINEER — JENNIFER BROOKE RIVERA — No. C70332 — Exp. 09/30/10 — CIVIL — STATE OF CALIFORNIA

THE STATE OF CALIFORNIA OR ITS OFFICERS OR AGENTS SHALL NOT BE RESPONSIBLE FOR THE ACCURACY OR COMPLETENESS OF ELECTRONIC COPIES OF THIS PLAN SHEET.

AECOM
999 TOWN & COUNTRY RD
ORANGE, CA 92868

ORANGE COUNTY
TRANSPORTATION AUTHORITY
550 S. MAIN STREET
ORANGE, CA 92863-1584

DRAINAGE QUANTITIES

DRAINAGE PLAN SHEET No.	SYSTEM No.	UNIT	MINOR CONCRETE (MINOR STRUCTURE)	CLASS 1 CONCRETE (BIXBY CHANNEL)	STRUCTURAL CONCRETE (BOX CULVERT)	CONCRETE (DITCH LINING)	CLASS 3 AGGREGATE BASE	GRATED LINE DRAIN	(N) BIOSWALE	DITCH EXCAVATION	(N) BIOSTRIP	(N) GRATES			Misc IRON & STEEL **	BAR REINFORCING STEEL (CHANNEL)	BAR REINFORCING STEEL (BOX CULVERT)	(N) STRUCTURAL BACKFILL	12" CSP (0.079" THICK)	18" REINFORCED Conc PIPE	24" REINFORCED Conc PIPE	36" REINFORCED Conc PIPE	DESCRIPTION	STATION
												TYPE 24-12	TYPE 36R	COMBINATION CATCH BASIN										
			CY	CY	CY	CY	CY	LF	LF	CY	SF	EA	EA	EA	LB	LB	LB	CY	LF	LF	LF	LF		
D-5	26A	a																					HMAOD	
D-5	26B	a																					HMAOD	
D-5	26C	a																					HMAOD	
D-5	26D	a																					HMAOD	
D-5	26E	a																					HMAOD	
D-5	26F	a																					HMAOD	
D-6	27	a	0.1																				JUNCTION STRUCTURE	47.39 Rt "C-3" 48+37.48
D-6	27	b																			43		24" RCP	
D-6	27	c	0.9																				CONCRETE COLLAR	4.74 Lt "C-3" 48+40.40
D-6	27	d	0.6																				JUNCTION STRUCTURE	2.81 Rt "A" 439+99.87
D-6	27	e																			30		24" RCP	
D-6	27	f	7.9																				CONCRETE ENCASEMENT	
D-6	27	g	2.0									2			634								GD-1 INLET	2.47 Lt "A" 439+65.00
D-6	27	h																			23		24" RCP	
D-6	27	i	6.1																				CONCRETE ENCASEMENT	
D-6	27	j	2.0									2			634								GD-1 INLET	2.47 Lt "A" 439+37.00
D-6	27	k						28															GRATED LINE DRAIN	
D-6	27	l																					REMOVE CONCRETE CHANNEL	
D-6	27	m																					REMOVE CONCRETE HEADWALL	
D-6	27	n																					REMOVE DROP INLET	2.87 Rt "A" 439+99.87
			19.5					28				4			1268						97		SUB TOTAL	

(N) INFORMATION ONLY, NOT A SEPARATE BID ITEM

* FOR ADDITIONAL QUANTITIES, SEE SUMMARY OF QUANTITIES
** FOR ADDITIONAL QUANTITIES, SEE STAGE CONSTRUCTION QUANTITIES

DRAINAGE QUANTITIES
DQ-25

REVISED BY	DUC TRAN
DATE REVISED	8/10/09
CALCULATED-DESIGNED BY	RASHOD GIBSON
CHECKED BY	BROOKE RIVERA
CONSULTANT FUNCTIONAL SUPERVISOR	ANDRZEJ NOWAK

STATE OF CALIFORNIA - DEPARTMENT OF TRANSPORTATION
Caltrans

LAST REVISION DATE PLOTTED => 03-FEB-2010
08-10-09 TIME PLOTTED => 11:02

BORDER LAST REVISED 8/1/2008 — RELATIVE BORDER SCALE IS IN INCHES 0 1 2 3 — USERNAME => trmnguye — DGN FILE => c071631d025.dgn — CU 12235 — EA 071631

Dist	COUNTY	ROUTE	POST MILES TOTAL PROJECT	SHEET No.	TOTAL SHEETS
12	Ora	22,405, 605	R0.3/R0.9, 22.3/24.0,3.0/R1.6	483	1929

REGISTERED CIVIL ENGINEER — 12/22/09 DATE

2-1-10
PLANS APPROVAL DATE

REGISTERED PROFESSIONAL ENGINEER — JENNIFER BROOKE RIVERA — No. C70332 — Exp. 09/30/10 — CIVIL — STATE OF CALIFORNIA

THE STATE OF CALIFORNIA OR ITS OFFICERS OR AGENTS SHALL NOT BE RESPONSIBLE FOR THE ACCURACY OR COMPLETENESS OF ELECTRONIC COPIES OF THIS PLAN SHEET.

AECOM
999 TOWN & COUNTRY RD
ORANGE, CA 92868

ORANGE COUNTY
TRANSPORTATION AUTHORITY
550 S. MAIN STREET
ORANGE, CA 92863-1584

DRAINAGE QUANTITIES

DRAINAGE PLAN SHEET No.	SYSTEM No.	UNIT	48" REINFORCED Conc PIPE	(N) PIPE JOINT CLASSIFICATION	FIELD LEAKAGE TESTING	16" WELDED STEEL PIPE (0.375" WALL THICKNESS)	24" WELDED STEEL PIPE (0.375" WALL THICKNESS)	18" AFES	24" AFES	ROCK SLOPE PROTECTION FABRIC	ROCK SLOPE PROTECTION (FACING, METHOD B)	HOT MIX ASPHALT *	PLACE HOT MIX ASPHALT (Misc AREA)	REMOVE DRAINAGE FACILITY	(N) REMOVE ACOD	REMOVE CULVERT	REMOVE REINFORCED CONCRETE BOX CULVERT	REMOVE CONCRETE (HEADWALL)	REMOVE CONCRETE (DITCH)	REMOVE CONCRETE (CHANNEL)	(N) REMOVE EARTHEN SWALE	(N) HEIGHT OF INLET	(N) MAXIMUM COVER	DESCRIPTION	STATION
			LF		LF	LF	LF	EA	EA	SQYD	TON	TON	SQYD	EA	EA	LF	LF	CY	LF	CY	LF	LF	LF		
D-5	26A	a										0.53	3.60												HMAOD	
D-5	26B	a										0.52	3.57												HMAOD	
D-5	26C	a										0.53	3.63												HMAOD	
D-5	26D	a										0.57	3.90												HMAOD	
D-5	26E	a										0.61	4.18												HMAOD	
D-5	26F	a										0.72	4.94												HMAOD	
D-6	27	a																							JUNCTION STRUCTURE	47.39 Rt "C-3" 48+37.48
D-6	27	b		S																				6.9	24" RCP	
D-6	27	c																							CONCRETE COLLAR	4.74 Lt "C-3" 48+40.40
D-6	27	d																							JUNCTION STRUCTURE	2.81 Rt "A" 439+99.87
D-6	27	e		S																				1.8	24" RCP	
D-6	27	f																							CONCRETE ENCASEMENT	
D-6	27	g																					4.1		GD-1 INLET	2.47 Lt "A" 439+65.00
D-6	27	h		S																				1.7	24" RCP	
D-6	27	i																							CONCRETE ENCASEMENT	
D-6	27	j																					4.1		GD-1 INLET	2.47 Lt "A" 439+37.00
D-6	27	k																							GRATED LINE DRAIN	
D-6	27	l																		22					REMOVE CONCRETE CHANNEL	
D-6	27	m																1.2							REMOVE CONCRETE HEADWALL	
D-6	27	n												1											REMOVE DROP INLET	2.87 Rt "A" 439+99.87
												3.48	23.8	1				1.2	22			8.2	10.4		SUB TOTAL	

(N) INFORMATION ONLY, NOT A SEPARATE BID ITEM

* FOR ADDITIONAL QUANTITIES, SEE SUMMARY OF QUANTITIES
** FOR ADDITIONAL QUANTITIES, SEE STAGE CONSTRUCTION QUANTITIES

DRAINAGE QUANTITIES
DQ-26

CALCULATED-DESIGNED BY	CHECKED BY	REVISED BY	DATE REVISED
RASHOD GIBSON	BROOKE RIVERA	DUC TRAN	8/10/09

CONSULTANT FUNCTIONAL SUPERVISOR: ANDRZEJ NOWAK

STATE OF CALIFORNIA - DEPARTMENT OF TRANSPORTATION — Caltrans

LAST REVISION DATE PLOTTED => 03-FEB-2010
TIME PLOTTED => 11:02
08-10-09

BORDER LAST REVISED 8/1/2008 — RELATIVE BORDER SCALE IS IN INCHES 0 1 2 3 — USERNAME => trmnguye — DGN FILE => c071631d026.dgn — CU 12235 — EA 071631

Dist	COUNTY	ROUTE	POST MILES TOTAL PROJECT	SHEET No.	TOTAL SHEETS
12	Ora	22,405, 605	R0.3/R0.9, 22.3/24.0,3.0/R1.6	484	1929

REGISTERED CIVIL ENGINEER — 8/10/09 DATE

2-1-10
PLANS APPROVAL DATE

REGISTERED PROFESSIONAL ENGINEER
JENNIFER BROOKE RIVERA
No. C70332
Exp. 09/30/10
CIVIL
STATE OF CALIFORNIA

THE STATE OF CALIFORNIA OR ITS OFFICERS OR AGENTS SHALL NOT BE RESPONSIBLE FOR THE ACCURACY OR COMPLETENESS OF ELECTRONIC COPIES OF THIS PLAN SHEET.

AECOM
999 TOWN & COUNTRY RD
ORANGE, CA 92868

ORANGE COUNTY
TRANSPORTATION AUTHORITY
550 S. MAIN STREET
ORANGE, CA 92863-1584

DRAINAGE QUANTITIES

DRAINAGE PLAN SHEET No.	SYSTEM No.	UNIT	MINOR CONCRETE (MINOR STRUCTURE)	CLASS 1 CONCRETE (BIXBY CHANNEL)	STRUCTURAL CONCRETE (BOX CULVERT)	CONCRETE (DITCH LINING)	CLASS 3 AGGREGATE BASE	GRATED LINE DRAIN	(N) BIOSWALE	DITCH EXCAVATION	(N) BIOSTRIP	(N) GRATES			Misc IRON & STEEL **	BAR REINFORCING STEEL (CHANNEL)	BAR REINFORCING STEEL (BOX CULVERT)	(N) STRUCTURAL BACKFILL	12" CSP (0.079" THICK)	18" REINFORCED Conc PIPE	24" REINFORCED Conc PIPE	36" REINFORCED Conc PIPE	DESCRIPTION	STATION
												TYPE 24-12	TYPE 36R	COMBINATION CATCH BASIN										
			CY	CY	CY	CY	CY	LF	LF	CY	SF	EA	EA	EA	LB	LB	LB	CY	LF	LF	LF	LF		
D-6	28	a	0.1																				JUNCTION STRUCTURE	42.69 Rt "C-3" 45+28.32
D-6	28	b																			28		24" RCP	
D-6	28	c	0.9																				CONCRETE COLLAR	15.08 Rt "C-3" 45+32.86
D-6	28	d																					REMOVE CONCRETE CHANNEL	
D-6	28	e																					REMOVE CONCRETE HEADWALL	
D-6	28A	a	0.1																				JUNCTION STRUCTURE	45.02 Rt "C-3" 43+54.46
D-6	28A	b																			45		24" RCP	
D-6	28A	c	0.9																				CONCRETE COLLAR	
D-6	28A	d																	2				VERTICAL DROP CONNECTOR SYSTEM	
D-6	28A	e	4.6									2			634								G1 INLET	3.20 Lt "C-3" 43+54.98
D-6	29	a							35	2.3													BIOSWALE	
D-6	29	b	1.2																				CONCRETE HEADWALL	51.94 Lt "C-3" 39+47.12
D-6	29	c																			214		24" RCP	
D-6	29	d	4.5									2			634								GD-1 INLET	35.72 Lt "C-3" 41+63.23
D-6	29	e																			38		24" RCP	
D-6	29	f	0.8																				CONCRETE COLLAR	63.29 Lt "C-3" 41+92.24
D-6	29	g																					REMOVE CONCRETE CHANNEL	
			13.1						35.0	2.3		4			1268				2		324		SUB TOTAL	

(N) INFORMATION ONLY, NOT A SEPARATE BID ITEM

* FOR ADDITIONAL QUANTITIES, SEE SUMMARY OF QUANTITIES
** FOR ADDITIONAL QUANTITIES, SEE STAGE CONSTRUCTION QUANTITIES

DRAINAGE QUANTITIES
DQ-27

REVISED BY: DUC TRAN
DATE REVISED: 8/10/09
CALCULATED-DESIGNED BY: RASHOD GIBSON
CHECKED BY: BROOKE RIVERA
CONSULTANT FUNCTIONAL SUPERVISOR: ANDRZEJ NOWAK
STATE OF CALIFORNIA - DEPARTMENT OF TRANSPORTATION
Caltrans

LAST REVISION: DATE PLOTTED => 03-FEB-2010 08-10-09 TIME PLOTTED => 11:02

BORDER LAST REVISED 8/1/2008
RELATIVE BORDER SCALE IS IN INCHES 0 1 2 3
USERNAME => trmnguye
DGN FILE => c071631d027.dgn
CU 12235
EA 071631

Dist	COUNTY	ROUTE	POST MILES TOTAL PROJECT	SHEET No.	TOTAL SHEETS
12	Ora	22,405, 605	R0.3/R0.9, 22.3/24.0,3.0/R1.6	485	1929

REGISTERED CIVIL ENGINEER — 12/22/09 DATE

2-1-10
PLANS APPROVAL DATE

REGISTERED PROFESSIONAL ENGINEER
JENNIFER BROOKE RIVERA
No. C70332
Exp. 09/30/10
CIVIL
STATE OF CALIFORNIA

THE STATE OF CALIFORNIA OR ITS OFFICERS OR AGENTS SHALL NOT BE RESPONSIBLE FOR THE ACCURACY OR COMPLETENESS OF ELECTRONIC COPIES OF THIS PLAN SHEET.

AECOM
999 TOWN & COUNTRY RD
ORANGE, CA 92868

ORANGE COUNTY
TRANSPORTATION AUTHORITY
550 S. MAIN STREET
ORANGE, CA 92863-1584

DRAINAGE QUANTITIES

DRAINAGE PLAN SHEET No.	SYSTEM No.	UNIT	48" REINFORCED Conc PIPE	(N) PIPE JOINT CLASSIFICATION	FIELD LEAKAGE TESTING	16" WELDED STEEL PIPE (0.375" WALL THICKNESS)	24" WELDED STEEL PIPE (0.375" WALL THICKNESS)	18" AFES	24" AFES	ROCK SLOPE PROTECTION FABRIC	ROCK SLOPE PROTECTION (FACING, METHOD B)	HOT MIX ASPHALT *	PLACE HOT MIX ASPHALT (Misc AREA)	REMOVE DRAINAGE FACILITY	(N) REMOVE ACOD	REMOVE CULVERT	REMOVE REINFORCED CONCRETE BOX CULVERT	REMOVE CONCRETE (HEADWALL)	REMOVE CONCRETE (DITCH)	REMOVE CONCRETE (CHANNEL)	(N) REMOVE EARTHEN SWALE	(N) HEIGHT OF INLET	(N) MAXIMUM COVER	DESCRIPTION	STATION
			LF		LF	LF	LF	EA	EA	SQYD	TON	TON	SQYD	EA	EA	LF	LF	CY	LF	CY	LF	LF	LF		
D-6	28	a																						JUNCTION STRUCTURE	42.69 Rt "C-3" 45+28.32
D-6	28	b		S																			10.5	24" RCP	
D-6	28	c																						CONCRETE COLLAR	15.08 Rt "C-3" 45+32.86
D-6	28	d																	20					REMOVE CONCRETE CHANNEL	
D-6	28	e																1.2						REMOVE CONCRETE HEADWALL	
D-6	28A	a																						JUNCTION STRUCTURE	45.02 Rt "C-3" 43+54.46
D-6	28A	b		S																			12.3	24" RCP	
D-6	28A	c																						CONCRETE COLLAR	
D-6	28A	d				6	5																	VERTICAL DROP CONNECTOR SYSTEM	
D-6	28A	e																					12.4	G1 INLET	3.20 Lt "C-3" 43+54.98
D-6	29	a																						BIOSWALE	
D-6	29	b																						CONCRETE HEADWALL	51.94 Lt "C-3" 39+47.12
D-6	29	c		S																				24" RCP	
D-6	29	d																					11.9	GD-1 INLET	35.72 Lt "C-3" 41+63.23
D-6	29	e		S																				24" RCP	
D-6	29	f																						CONCRETE COLLAR	63.29 Lt "C-3" 41+92.24
D-6	29	g																	220					REMOVE CONCRETE CHANNEL	
						6	5											1.2	240			24.3	22.8	SUB TOTAL	

(N) INFORMATION ONLY, NOT A SEPARATE BID ITEM

* FOR ADDITIONAL QUANTITIES, SEE SUMMARY OF QUANTITIES
** FOR ADDITIONAL QUANTITIES, SEE STAGE CONSTRUCTION QUANTITIES

DRAINAGE QUANTITIES
DQ-28

REVISED BY	DUC TRAN
DATE REVISED	8/10/09
CALCULATED-DESIGNED BY	RASHOD GIBSON
CHECKED BY	BROOKE RIVERA
CONSULTANT FUNCTIONAL SUPERVISOR	ANDRZEJ NOWAK

STATE OF CALIFORNIA - DEPARTMENT OF TRANSPORTATION
Caltrans

LAST REVISION DATE PLOTTED => 03-FEB-2010
08-10-09 TIME PLOTTED => 11:02

BORDER LAST REVISED 8/1/2008 — RELATIVE BORDER SCALE IS IN INCHES 0 1 2 3 — USERNAME => trmnguye — DGN FILE => c071631d028.dgn — CU 12235 — EA 071631

Dist	COUNTY	ROUTE	POST MILES TOTAL PROJECT	SHEET No.	TOTAL SHEETS
12	Ora	22,405, 605	R0.3/R0.9, 22.3/24.0,3.0/R1.6	486	1929

REGISTERED CIVIL ENGINEER — DATE: 12/22/09

2-1-10
PLANS APPROVAL DATE

REGISTERED PROFESSIONAL ENGINEER — JENNIFER BROOKE RIVERA — No. C70332 — Exp. 09/30/10 — CIVIL — STATE OF CALIFORNIA

THE STATE OF CALIFORNIA OR ITS OFFICERS OR AGENTS SHALL NOT BE RESPONSIBLE FOR THE ACCURACY OR COMPLETENESS OF ELECTRONIC COPIES OF THIS PLAN SHEET.

AECOM
999 TOWN & COUNTRY RD
ORANGE, CA 92868

ORANGE COUNTY
TRANSPORTATION AUTHORITY
550 S. MAIN STREET
ORANGE, CA 92863-1584

DRAINAGE QUANTITIES

DRAINAGE PLAN SHEET No.	SYSTEM No.	UNIT	MINOR CONCRETE (MINOR STRUCTURE)	CLASS 1 CONCRETE (BIXBY CHANNEL)	STRUCTURAL CONCRETE (BOX CULVERT)	CONCRETE (DITCH LINING)	CLASS 3 AGGREGATE BASE	GRATED LINE DRAIN	(N) BIOSWALE	DITCH EXCAVATION	(N) BIOSTRIP	(N) GRATES			Misc IRON & STEEL **	BAR REINFORCING STEEL (CHANNEL)	BAR REINFORCING STEEL (BOX CULVERT)	(N) STRUCTURAL BACKFILL	12" CSP (0.079" THICK)	18" REINFORCED Conc PIPE	24" REINFORCED Conc PIPE	36" REINFORCED Conc PIPE	DESCRIPTION	STATION
												TYPE 24-12	TYPE 36R	COMBINATION CATCH BASIN										
			CY	CY	CY	CY	CY	LF	LF	CY	SF	EA	EA	EA	LB	LB	LB	CY	LF	LF	LF	LF		
D-6	29A	a	1.9									2			634								GD-1 INLET	3.24 Lt "A" 444+63.23
D-6	29A	b																			56		24" RCP	
D-6	29A	c	18.9																				CONCRETE ENCASEMENT	
D-6	29A	d	1.9									2			634								GD-1 INLET	4.47 Lt "A" 445+24.33
D-6	29A	e																			84		24" RCP	
D-6	29A	f	18.9																				CONCRETE ENCASEMENT	
D-6	29A	g	2.0									2			634								GD-1 INLET	6.26 Lt "A" 446+12.76
D-6	29A	h																					REMOVE DI	2.56 Lt "A" 445+58.70
D-6	29A	i																					REMOVE 24" RCP	
D-6	29A	j																					REMOVE DI	2.90 Lt "A" 445+84.89
D-6	29A	k																					REMOVE 24" RCP	
D-6	29B	a	1.8									2			634								GD-1 INLET	5.82 Rt "A" 446+14.33
D-6	29B	b																			7		24" RCP	
D-6	29B	c	1.9																				CONCRETE ENCASEMENT	
			47.4									8			2536						148		SUB TOTAL	

(N) INFORMATION ONLY, NOT A SEPARATE BID ITEM

* FOR ADDITIONAL QUANTITIES, SEE SUMMARY OF QUANTITIES
** FOR ADDITIONAL QUANTITIES, SEE STAGE CONSTRUCTION QUANTITIES

DRAINAGE QUANTITIES
DQ-29

REVISED BY	DUC TRAN
DATE REVISED	8/10/09
CALCULATED-DESIGNED BY	RASHOD GIBSON
CHECKED BY	BROOKE RIVERA
CONSULTANT FUNCTIONAL SUPERVISOR	ANDRZEJ NOWAK

STATE OF CALIFORNIA - DEPARTMENT OF TRANSPORTATION
Caltrans

LAST REVISION DATE PLOTTED => 03-FEB-2010
08-10-09 TIME PLOTTED => 11:02

BORDER LAST REVISED 8/1/2008

RELATIVE BORDER SCALE IS IN INCHES 0 1 2 3

USERNAME => trmnguye
DGN FILE => c071631d029.dgn

CU 12235

EA 071631

Dist	COUNTY	ROUTE	POST MILES TOTAL PROJECT	SHEET No.	TOTAL SHEETS
12	Ora	22,405, 605	R0.3/R0.9, 22.3/24.0,3.0/R1.6	487	1929

REGISTERED CIVIL ENGINEER — 12/22/09 DATE

2-1-10
PLANS APPROVAL DATE

REGISTERED PROFESSIONAL ENGINEER
JENNIFER BROOKE RIVERA
No. C70332
Exp. 09/30/10
CIVIL
STATE OF CALIFORNIA

THE STATE OF CALIFORNIA OR ITS OFFICERS OR AGENTS SHALL NOT BE RESPONSIBLE FOR THE ACCURACY OR COMPLETENESS OF ELECTRONIC COPIES OF THIS PLAN SHEET.

AECOM
999 TOWN & COUNTRY RD
ORANGE, CA 92868

ORANGE COUNTY
TRANSPORTATION AUTHORITY
550 S. MAIN STREET
ORANGE, CA 92863-1584

DRAINAGE QUANTITIES

DRAINAGE PLAN SHEET No.	SYSTEM No.	UNIT	48" REINFORCED Conc PIPE	(N) PIPE JOINT CLASSIFICATION	FIELD LEAKAGE TESTING	16" WELDED STEEL PIPE (0.375" WALL THICKNESS)	24" WELDED STEEL PIPE (0.375" WALL THICKNESS)	18" AFES	24" AFES	ROCK SLOPE PROTECTION FABRIC	ROCK SLOPE PROTECTION (FACING, METHOD B)	HOT MIX ASPHALT *	PLACE HOT MIX ASPHALT (Misc AREA)	REMOVE DRAINAGE FACILITY	(N) REMOVE ACOD	REMOVE CULVERT	REMOVE REINFORCED CONCRETE BOX CULVERT	REMOVE CONCRETE (HEADWALL)	REMOVE CONCRETE (DITCH)	REMOVE CONCRETE (CHANNEL)	(N) REMOVE EARTHEN SWALE	(N) HEIGHT OF INLET	(N) MAXIMUM COVER	DESCRIPTION	STATION
			LF		LF	LF	LF	EA	EA	SQYD	TON	TON	SQYD	EA	EA	LF	LF	CY	LF	CY	LF	LF	LF		
D-6	29A	a																				3.9		GD-1 INLET	3.24 Lt "A" 444+63.23
D-6	29A	b		S																				24" RCP	
D-6	29A	c																						CONCRETE ENCASEMENT	
D-6	29A	d																				4.0		GD-1 INLET	4.47 Lt "A" 445+24.33
D-6	29A	e		S																				24" RCP	
D-6	29A	f																						CONCRETE ENCASEMENT	
D-6	29A	g																				4.2		GD-1 INLET	6.26 Lt "A" 446+12.76
D-6	29A	h													1									REMOVE DI	2.56 Lt "A" 445+58.70
D-6	29A	i															25							REMOVE 24" RCP	
D-6	29A	j													1									REMOVE DI	2.90 Lt "A" 445+84.89
D-6	29A	k															27							REMOVE 24" RCP	
D-6	29B	a																				3.5		GD-1 INLET	5.82 Rt "A" 446+14.33
D-6	29B	b		S																			1.7	24" RCP	
D-6	29B	c																						CONCRETE ENCASEMENT	
															2		52.0					15.6	1.7	SUB TOTAL	

(N) INFORMATION ONLY, NOT A SEPARATE BID ITEM

* FOR ADDITIONAL QUANTITIES, SEE SUMMARY OF QUANTITIES
** FOR ADDITIONAL QUANTITIES, SEE STAGE CONSTRUCTION QUANTITIES

DRAINAGE QUANTITIES
DQ-30

CALCULATED-DESIGNED BY: RASHOD GIBSON
CHECKED BY: BROOKE RIVERA
REVISED BY: DUC TRAN
DATE REVISED: 8/10/09
CONSULTANT FUNCTIONAL SUPERVISOR: ANDRZEJ NOWAK
STATE OF CALIFORNIA - DEPARTMENT OF TRANSPORTATION
Caltrans

LAST REVISION DATE PLOTTED => 03-FEB-2010
08-10-09 TIME PLOTTED => 11:02

BORDER LAST REVISED 8/1/2008
RELATIVE BORDER SCALE IS IN INCHES 0 1 2 3
USERNAME => trmnguye
DGN FILE => c071631d030.dgn
CU 12235
EA 071631

Dist	COUNTY	ROUTE	POST MILES TOTAL PROJECT	SHEET No.	TOTAL SHEETS
12	Ora	22,405, 605	R0.3/R0.9, 22.3/24.0,3.0/R1.6	488	1929

REGISTERED CIVIL ENGINEER — DATE 8/10/09

2-1-10
PLANS APPROVAL DATE

REGISTERED PROFESSIONAL ENGINEER
JENNIFER BROOKE RIVERA
No. C70332
Exp. 09/30/10
CIVIL
STATE OF CALIFORNIA

THE STATE OF CALIFORNIA OR ITS OFFICERS OR AGENTS SHALL NOT BE RESPONSIBLE FOR THE ACCURACY OR COMPLETENESS OF ELECTRONIC COPIES OF THIS PLAN SHEET.

AECOM
999 TOWN & COUNTRY RD
ORANGE, CA 92868

ORANGE COUNTY
TRANSPORTATION AUTHORITY
550 S. MAIN STREET
ORANGE, CA 92863-1584

DRAINAGE QUANTITIES

DRAINAGE PLAN SHEET No.	SYSTEM No.	UNIT	MINOR CONCRETE (MINOR STRUCTURE)	CLASS 1 CONCRETE (BIXBY CHANNEL)	STRUCTURAL CONCRETE (BOX CULVERT)	CONCRETE (DITCH LINING)	CLASS 3 AGGREGATE BASE	GRATED LINE DRAIN	(N) BIOSWALE	DITCH EXCAVATION	(N) BIOSTRIP	(N) GRATES			Misc IRON & STEEL **	BAR REINFORCING STEEL (CHANNEL)	BAR REINFORCING STEEL (BOX CULVERT)	(N) STRUCTURAL BACKFILL	12" CSP (0.079" THICK)	18" REINFORCED Conc PIPE	24" REINFORCED Conc PIPE	36" REINFORCED Conc PIPE	DESCRIPTION	STATION
			CY	CY	CY	CY	CY	LF	LF	CY	SF	TYPE 24-12 EA	TYPE 36R EA	COMBINATION CATCH BASIN EA	LB	LB	LB	CY	LF	LF	LF	LF		
D-6	30	a	0.3																				JUNCTION STRUCTURE	23.66 Lt "OR" 4+47.65
D-6	30	b																			14		24" RCP	
D-6	30	c	3.5																				CONCRETE ENCASEMENT	
D-6	30	d	6.6									2			634								GD-1 INLET	21.80 Lt "OR" 4+46.58
D-6	30	e																					REMOVE 24" RCP	
D-6	30	f																					REMOVE DI	29.90 Rt "A-2" 34+40.12
D-6	30	g																					REMOVE 24" RCP	
D-6	30A	a	0.3																				JUNCTION STRUCTURE	69.84 Lt "A-2" 32+91.83
D-6	30A	b																			69		24" RCP	
D-6	30A	c	0.9																				CONCRETE COLLAR	
D-6	30A	d																	2				VERTICAL DROP CONNECTOR SYSTEM	
D-6	30A	e	1.6																				CONCRETE ENCASEMENT	
D-6	30A	f	1.4									1											G1 INLET	3.70 Lt "A-2" 32+88.71
D-6	30B	a	0.3																				JUNCTION STRUCTURE	70.73 Lt "A-2" 32+71.50
D-6	30B	b																			70		24" RCP	
D-6	30B	c	0.9																				CONCRETE COLLAR	
D-6	30B	d																	2				VERTICAL DROP CONNECTOR SYSTEM	
D-6	30B	e	1.6																				CONCRETE ENCASEMENT	
D-6	30B	f	1.4									1											G1 INLET	4.00 Rt "A-2" 32+76.00
			19.0									4			634				4		153		SUB TOTAL	

(N) INFORMATION ONLY, NOT A SEPARATE BID ITEM

* FOR ADDITIONAL QUANTITIES, SEE SUMMARY OF QUANTITIES
** FOR ADDITIONAL QUANTITIES, SEE STAGE CONSTRUCTION QUANTITIES

DRAINAGE QUANTITIES
DQ-31

REVISED BY: DUC TRAN
DATE REVISED: 8/10/09
CALCULATED-DESIGNED BY: RASHOD GIBSON
CHECKED BY: BROOKE RIVERA
CONSULTANT FUNCTIONAL SUPERVISOR: ANDRZEJ NOWAK

STATE OF CALIFORNIA - DEPARTMENT OF TRANSPORTATION
Caltrans

LAST REVISION DATE PLOTTED => 03-FEB-2010
08-10-09 TIME PLOTTED => 11:03

BORDER LAST REVISED 8/1/2008
RELATIVE BORDER SCALE IS IN INCHES 0 1 2 3
USERNAME => trmnguye
DGN FILE => c071631d031.dgn
CU 12235
EA 071631

Dist	COUNTY	ROUTE	POST MILES TOTAL PROJECT	SHEET No.	TOTAL SHEETS
12	Ora	22,405, 605	R0.3/R0.9, 22.3/24.0,3.0/R1.6	489	1929

REGISTERED CIVIL ENGINEER — 12/22/09 DATE

2-1-10
PLANS APPROVAL DATE

REGISTERED PROFESSIONAL ENGINEER
JENNIFER BROOKE RIVERA
No. C70332
Exp. 09/30/10
CIVIL
STATE OF CALIFORNIA

THE STATE OF CALIFORNIA OR ITS OFFICERS OR AGENTS SHALL NOT BE RESPONSIBLE FOR THE ACCURACY OR COMPLETENESS OF ELECTRONIC COPIES OF THIS PLAN SHEET.

AECOM
999 TOWN & COUNTRY RD
ORANGE, CA 92868

ORANGE COUNTY
TRANSPORTATION AUTHORITY
550 S. MAIN STREET
ORANGE, CA 92863-1584

DRAINAGE QUANTITIES

DRAINAGE PLAN SHEET No.	SYSTEM No.	UNIT	48" REINFORCED Conc PIPE	(N) PIPE JOINT CLASSIFICATION	FIELD LEAKAGE TESTING	16" WELDED STEEL PIPE (0.375" WALL THICKNESS)	24" WELDED STEEL PIPE (0.375" WALL THICKNESS)	18" AFES	24" AFES	ROCK SLOPE PROTECTION FABRIC	ROCK SLOPE PROTECTION (FACING, METHOD B)	HOT MIX ASPHALT *	PLACE HOT MIX ASPHALT (Misc AREA)	REMOVE DRAINAGE FACILITY	(N) REMOVE ACOD	REMOVE CULVERT	REMOVE REINFORED CONCRETE BOX CULVERT	REMOVE CONCRETE (HEADWALL)	REMOVE CONCRETE (DITCH)	REMOVE CONCRETE (CHANNEL)	(N) REMOVE EARTHEN SWALE	(N) HEIGHT OF INLET	(N) MAXIMUM COVER	DESCRIPTION	STATION
			LF		LF	LF	LF	EA	EA	SQYD	TON	TON	SQYD	EA	EA	LF	LF	CY	LF	CY	LF	LF	LF		
D-6	30	a																						JUNCTION STRUCTURE	23.66 Lt "OR" 4+47.65
D-6	30	b		W	14																		2.8	24" RCP	
D-6	30	c																						CONCRETE ENCASEMENT	
D-6	30	d																					18.5	GD-1 INLET	21.80 Lt "OR" 4+46.58
D-6	30	e														28								REMOVE 24" RCP	
D-6	30	f												1										REMOVE DI	29.90 Rt "A-2" 34+40.12
D-6	30	g														27								REMOVE 24" RCP	
D-6	30A	a																						JUNCTION STRUCTURE	69.84 Lt "A-2" 32+91.83
D-6	30A	b		W	69																		24.8	24" RCP	
D-6	30A	c																						CONCRETE COLLAR	
D-6	30A	d				20	5																	VERTICAL DROP CONNECTOR SYSTEM	
D-6	30A	e																						CONCRETE ENCASEMENT	
D-6	30A	f																						G1 INLET	3.70 Lt "A-2" 32+88.71
D-6	30B	a																						JUNCTION STRUCTURE	70.73 Lt "A-2" 32+71.50
D-6	30B	b		W	70																		25.6	24" RCP	
D-6	30B	c																						CONCRETE COLLAR	
D-6	30B	d				21	5																	VERTICAL DROP CONNECTOR SYSTEM	
D-6	30B	e																						CONCRETE ENCASEMENT	
D-6	30B	f																						G1 INLET	4.00 Rt "A-2" 32+76.00
					153	41	10							1		55.0						18.5	53.2	SUB TOTAL	

(N) INFORMATION ONLY, NOT A SEPARATE BID ITEM

* FOR ADDITIONAL QUANTITIES, SEE SUMMARY OF QUANTITIES
** FOR ADDITIONAL QUANTITIES, SEE STAGE CONSTRUCTION QUANTITIES

DRAINAGE QUANTITIES
DQ-32

REVISED BY: DUC TRAN — DATE REVISED: 8/10/09
CALCULATED-DESIGNED BY: RASHOD GIBSON
CHECKED BY: BROOKE RIVERA
CONSULTANT FUNCTIONAL SUPERVISOR: ANDRZEJ NOWAK
STATE OF CALIFORNIA - DEPARTMENT OF TRANSPORTATION
Caltrans

LAST REVISION: DATE PLOTTED => 03-FEB-2010 TIME PLOTTED => 11:03
08-10-09

BORDER LAST REVISED 8/1/2008
RELATIVE BORDER SCALE IS IN INCHES 0 1 2 3
USERNAME => trmnguye
DGN FILE => c071631d032.dgn
CU 12235
EA 071631

Dist	COUNTY	ROUTE	POST MILES TOTAL PROJECT	SHEET No.	TOTAL SHEETS
12	Ora	22,405, 605	R0.3/R0.9, 22.3/24.0,3.0/R1.6	490	1929

REGISTERED CIVIL ENGINEER — DATE 8/10/09

REGISTERED PROFESSIONAL ENGINEER — JENNIFER BROOKE RIVERA — No. C70332 — Exp. 09/30/10 — CIVIL — STATE OF CALIFORNIA

2-1-10
PLANS APPROVAL DATE

THE STATE OF CALIFORNIA OR ITS OFFICERS OR AGENTS SHALL NOT BE RESPONSIBLE FOR THE ACCURACY OR COMPLETENESS OF ELECTRONIC COPIES OF THIS PLAN SHEET.

AECOM
999 TOWN & COUNTRY RD
ORANGE, CA 92868

ORANGE COUNTY
TRANSPORTATION AUTHORITY
550 S. MAIN STREET
ORANGE, CA 92863-1584

DRAINAGE QUANTITIES

DRAINAGE PLAN SHEET No.	SYSTEM No.	UNIT	MINOR CONCRETE (MINOR STRUCTURE)	CLASS 1 CONCRETE (BIXBY CHANNEL)	STRUCTURAL CONCRETE (BOX CULVERT)	CONCRETE (DITCH LINING)	CLASS 3 AGGREGATE BASE	GRATED LINE DRAIN	(N) BIOSWALE	DITCH EXCAVATION	(N) BIOSTRIP	(N) GRATES			Misc IRON & STEEL **	BAR REINFORCING STEEL (CHANNEL)	BAR REINFORCING STEEL (BOX CULVERT)	(N) STRUCTURAL BACKFILL	12" CSP (0.079" THICK)	18" REINFORCED Conc PIPE	24" REINFORCED Conc PIPE	36" REINFORCED Conc PIPE	DESCRIPTION	STATION
												TYPE 24-12	TYPE 36R	COMBINATION CATCH BASIN										
			CY	CY	CY	CY	CY	LF	LF	CY	SF	EA	EA	EA	LB	LB	LB	CY	LF	LF	LF	LF		
D-6	30C	a	0.4																				JUNCTION STRUCTURE	72.08 Lt "A-2" 32+40.42
D-6	30C	b																			71		24" RCP	
D-6	30C	c	0.9																				CONCRETE COLLAR	
D-6	30C	d																	2				VERTICAL DROP CONNECTOR SYSTEM	
D-6	30C	e	1.6																				CONCRETE ENCASEMENT	
D-6	30C	f	1.4									1											G1 INLET	4.00 Rt "A-2" 32+45.00
D-6	30D	a	0.3																				JUNCTION STRUCTURE	75.63 Lt "A-2" 32+03.58
D-6	30D	b																			75		24" RCP	
D-6	30D	c	0.9																				CONCRETE COLLAR	
D-6	30D	d																	2				VERTICAL DROP CONNECTOR SYSTEM	
D-6	30D	e	1.6																				CONCRETE ENCASEMENT	
D-6	30D	f	1.4									1											G1 INLET	4.00 Lt "A-2" 32+08.37
D-6	30E	a	0.3																				JUNCTION STRUCTURE	81.66 Lt "A-2" 31+46.43
D-6	30E	b																			81		24" RCP	
D-6	30E	c	0.9																				CONCRETE COLLAR	
D-6	30E	d																	2				VERTICAL DROP CONNECTOR SYSTEM	
D-6	30E	e	1.6																				CONCRETE ENCASEMENT	
D-6	30E	f	1.4									1											G1 INLET	4.00 Lt "A-2" 31+51.58
			13.0									3							6		227		SUB TOTAL	

(N) INFORMATION ONLY, NOT A SEPARATE BID ITEM

* FOR ADDITIONAL QUANTITIES, SEE SUMMARY OF QUANTITIES
** FOR ADDITIONAL QUANTITIES, SEE STAGE CONSTRUCTION QUANTITIES

DRAINAGE QUANTITIES
DQ-33

REVISED BY: DUC TRAN — DATE REVISED: 8/10/09
CALCULATED-DESIGNED BY: RASHOD GIBSON
CHECKED BY: BROOKE RIVERA
CONSULTANT FUNCTIONAL SUPERVISOR: ANDRZEJ NOWAK
STATE OF CALIFORNIA - DEPARTMENT OF TRANSPORTATION — Caltrans

LAST REVISION DATE PLOTTED => 03-FEB-2010
08-10-09 TIME PLOTTED => 10:31

BORDER LAST REVISED 8/1/2008
RELATIVE BORDER SCALE IS IN INCHES 0 1 2 3
USERNAME => trmikesl
DGN FILE => c07163id033.dgn
CU 12235
EA 071631

Dist	COUNTY	ROUTE	POST MILES TOTAL PROJECT	SHEET No.	TOTAL SHEETS
12	Ora	22,405, 605	R0.3/R0.9, 22.3/24.0,3.0/R1.6	491	1929

REGISTERED CIVIL ENGINEER — DATE 12/22/09

JENNIFER BROOKE RIVERA No. C70332 Exp. 09/30/10 CIVIL — REGISTERED PROFESSIONAL ENGINEER — STATE OF CALIFORNIA

2-1-10
PLANS APPROVAL DATE

THE STATE OF CALIFORNIA OR ITS OFFICERS OR AGENTS SHALL NOT BE RESPONSIBLE FOR THE ACCURACY OR COMPLETENESS OF ELECTRONIC COPIES OF THIS PLAN SHEET.

AECOM
999 TOWN & COUNTRY RD
ORANGE, CA 92868

ORANGE COUNTY
TRANSPORTATION AUTHORITY
550 S. MAIN STREET
ORANGE, CA 92863-1584

DRAINAGE QUANTITIES

DRAINAGE PLAN SHEET No.	SYSTEM No.	UNIT	48" REINFORCED Conc PIPE	(N) PIPE JOINT CLASSIFICATION	FIELD LEAKAGE TESTING	16" WELDED STEEL PIPE (0.375" WALL THICKNESS)	24" WELDED STEEL PIPE (0.375" WALL THICKNESS)	18" AFES	24" AFES	ROCK SLOPE PROTECTION FABRIC	ROCK SLOPE PROTECTION (FACING, METHOD B)	HOT MIX ASPHALT *	PLACE HOT MIX ASPHALT (Misc AREA)	REMOVE DRAINAGE FACILITY	(N) REMOVE ACOD	REMOVE CULVERT	REMOVE REINFORED CONCRETE BOX CULVERT	REMOVE CONCRETE (HEADWALL)	REMOVE CONCRETE (DITCH)	REMOVE CONCRETE (CHANNEL)	(N) REMOVE EARTHEN SWALE	(N) HEIGHT OF INLET	(N) MAXIMUM COVER	DESCRIPTION	STATION
			LF		LF	LF	LF	EA	EA	SQYD	TON	TON	SQYD	EA	EA	LF	LF	CY	LF	CY	LF	LF	LF		
D-6	30C	a																						JUNCTION STRUCTURE	72.08 Lt "A-2" 32+40.42
D-6	30C	b		W	72																		28.4	24" RCP	
D-6	30C	c																						CONCRETE COLLAR	
D-6	30C	d				23	5																	VERTICAL DROP CONNECTOR SYSTEM	
D-6	30C	e																						CONCRETE ENCASEMENT	
D-6	30C	f																						G1 INLET	4.00 Rt "A-2" 32+45.00
D-6	30D	a																						JUNCTION STRUCTURE	75.63 Lt "A-2" 32+03.58
D-6	30D	b		W	75																		29.8	24" RCP	
D-6	30D	c																						CONCRETE COLLAR	
D-6	30D	d				25	5																	VERTICAL DROP CONNECTOR SYSTEM	
D-6	30D	e																						CONCRETE ENCASEMENT	
D-6	30D	f																						G1 INLET	4.00 Lt "A-2" 32+08.37
D-6	30E	a																						JUNCTION STRUCTURE	81.66 Lt "A-2" 31+46.43
D-6	30E	b		W	81																		33.5	24" RCP	
D-6	30E	c																						CONCRETE COLLAR	
D-6	30E	d				28	5																	VERTICAL DROP CONNECTOR SYSTEM	
D-6	30E	e																						CONCRETE ENCASEMENT	
D-6	30E	f																						G1 INLET	4.00 Lt "A-2" 31+51.58
					228	75	15																91.7	SUB TOTAL	

(N) INFORMATION ONLY, NOT A SEPARATE BID ITEM

* FOR ADDITIONAL QUANTITIES, SEE SUMMARY OF QUANTITIES
** FOR ADDITIONAL QUANTITIES, SEE STAGE CONSTRUCTION QUANTITIES

DRAINAGE QUANTITIES
DQ-34

CALCULATED-DESIGNED BY: RASHOD GIBSON
CHECKED BY: BROOKE RIVERA
REVISED BY: DUC TRAN
DATE REVISED: 8/10/09
CONSULTANT FUNCTIONAL SUPERVISOR: ANDRZEJ NOWAK
STATE OF CALIFORNIA - DEPARTMENT OF TRANSPORTATION
Caltrans

LAST REVISION DATE PLOTTED => 03-FEB-2010
08-10-09 TIME PLOTTED => 10:32

BORDER LAST REVISED 8/1/2008
RELATIVE BORDER SCALE IS IN INCHES 0 1 2 3
USERNAME => trmikesl
DGN FILE => c07163id034.dgn
CU 12235
EA 071631

Dist	COUNTY	ROUTE	POST MILES TOTAL PROJECT	SHEET No.	TOTAL SHEETS
12	Ora	22,405, 605	R0.3/R0.9, 22.3/24.0,3.0/R1.6	492	1929

REGISTERED CIVIL ENGINEER — 8/10/09 DATE

2-1-10
PLANS APPROVAL DATE

REGISTERED PROFESSIONAL ENGINEER
JENNIFER BROOKE RIVERA
No. C70332
Exp. 09/30/10
CIVIL
STATE OF CALIFORNIA

THE STATE OF CALIFORNIA OR ITS OFFICERS OR AGENTS SHALL NOT BE RESPONSIBLE FOR THE ACCURACY OR COMPLETENESS OF ELECTRONIC COPIES OF THIS PLAN SHEET.

AECOM
999 TOWN & COUNTRY RD
ORANGE, CA 92868

ORANGE COUNTY
TRANSPORTATION AUTHORITY
550 S. MAIN STREET
ORANGE, CA 92863-1584

DRAINAGE QUANTITIES

DRAINAGE PLAN SHEET No.	SYSTEM No.	UNIT	MINOR CONCRETE (MINOR STRUCTURE)	CLASS 1 CONCRETE (BIXBY CHANNEL)	STRUCTURAL CONCRETE (BOX CULVERT)	CONCRETE (DITCH LINING)	CLASS 3 AGGREGATE BASE	GRATED LINE DRAIN	(N) BIOSWALE	DITCH EXCAVATION	(N) BIOSTRIP	(N) GRATES TYPE 24-12	(N) GRATES TYPE 36R	(N) GRATES COMBINATION CATCH BASIN	Misc IRON & STEEL **	BAR REINFORCING STEEL (CHANNEL)	BAR REINFORCING STEEL (BOX CULVERT)	(N) STRUCTURAL BACKFILL	12" CSP (0.079" THICK)	18" REINFORCED Conc PIPE	24" REINFORCED Conc PIPE	36" REINFORCED Conc PIPE	DESCRIPTION	STATION
			CY	CY	CY	CY	CY	LF	LF	CY	SF	EA	EA	EA	LB	LB	LB	CY	LF	LF	LF	LF		
D-6	30F	a	0.3																				JUNCTION STRUCTURE	101.33 Lt "A-2" 30+16.41
D-6	30F	b																			101		24" RCP	
D-6	30F	c	0.9																				CONCRETE COLLAR	
D-6	30F	d																	2				VERTICAL DROP CONNECTOR SYSTEM	
D-6	30F	e	1.6																				CONCRETE ENCASEMENT	
D-6	30F	f	1.4									1											G1 INLET	4.00 Lt "A-2" 30+19.68
D-6	31	a								116.6													EARTHEN SWALE	
D-6	31	b	0.3										1		236							3	GCP INLET	158.80 Rt "A" 448+17.31
D-6	31	c																			85		24" RCP	
D-6	31	d	0.3										1		236							4	GCP INLET	163.72 Rt "A" 449+13.36
D-6	31	e																			68		24" RCP	
D-6	31A	a																					HMAOD	115.00' Rt "A" 439+72.50
D-6	32	a	2.7																				CONCRETE HEADWALL	36.80 Lt "C-3" 39+04.86
D-6	32	b				11.7				78.3													CONCRETE CHANNEL	
D-6	32	c	2.7																				CONCRETE HEADWALL	89.72 Lt "C-3" 39+05.42
D-6	32	d			17.8																		6' x 2.5' RCB	
			10.2		17.8	11.7				195.0		1	2		472				2		255	7	SUB TOTAL	

(N) INFORMATION ONLY, NOT A SEPARATE BID ITEM

* FOR ADDITIONAL QUANTITIES, SEE SUMMARY OF QUANTITIES
** FOR ADDITIONAL QUANTITIES, SEE STAGE CONSTRUCTION QUANTITIES

DRAINAGE QUANTITIES
DQ-35

REVISED BY	DUC TRAN
DATE REVISED	8/10/09
CALCULATED-DESIGNED BY	RASHOD GIBSON
CHECKED BY	BROOKE RIVERA
CONSULTANT FUNCTIONAL SUPERVISOR	ANDRZEJ NOWAK

STATE OF CALIFORNIA - DEPARTMENT OF TRANSPORTATION
Caltrans

LAST REVISION DATE PLOTTED => 03-FEB-2010
08-10-09 TIME PLOTTED => 10:32

BORDER LAST REVISED 8/1/2008
RELATIVE BORDER SCALE IS IN INCHES 0 1 2 3
USERNAME => trmikesl
DGN FILE => c07163id035.dgn
CU 12235
EA 071631

Dist	COUNTY	ROUTE	POST MILES TOTAL PROJECT	SHEET No.	TOTAL SHEETS
12	Ora	22,405, 605	R0.3/R0.9, 22.3/24.0,3.0/R1.6	493	1929

REGISTERED CIVIL ENGINEER — DATE 12/22/09

JENNIFER BROOKE RIVERA No. C70332 Exp. 09/30/10 CIVIL — REGISTERED PROFESSIONAL ENGINEER — STATE OF CALIFORNIA

2-1-10
PLANS APPROVAL DATE

THE STATE OF CALIFORNIA OR ITS OFFICERS OR AGENTS SHALL NOT BE RESPONSIBLE FOR THE ACCURACY OR COMPLETENESS OF ELECTRONIC COPIES OF THIS PLAN SHEET.

AECOM
999 TOWN & COUNTRY RD
ORANGE, CA 92868

ORANGE COUNTY
TRANSPORTATION AUTHORITY
550 S. MAIN STREET
ORANGE, CA 92863-1584

DRAINAGE QUANTITIES

DRAINAGE PLAN SHEET No.	SYSTEM No.	UNIT	48" REINFORCED Conc PIPE	(N) PIPE JOINT CLASSIFICATION	FIELD LEAKAGE TESTING	16" WELDED STEEL PIPE (0.375" WALL THICKNESS)	24" WELDED STEEL PIPE (0.375" WALL THICKNESS)	18" AFES	24" AFES	ROCK SLOPE PROTECTION FABRIC	ROCK SLOPE PROTECTION (FACING, METHOD B)	HOT MIX ASPHALT *	PLACE HOT MIX ASPHALT (Misc AREA)	REMOVE DRAINAGE FACILITY	(N) REMOVE ACOD	REMOVE CULVERT	REMOVE REINFORED CONCRETE BOX CULVERT	REMOVE CONCRETE (HEADWALL)	REMOVE CONCRETE (DITCH)	REMOVE CONCRETE (CHANNEL)	(N) REMOVE EARTHEN SWALE	(N) HEIGHT OF INLET	(N) MAXIMUM COVER	DESCRIPTION	STATION
			LF		LF	LF	LF	EA	EA	SQYD	TON	TON	SQYD	EA	EA	LF	LF	CY	LF	CY	LF	LF	LF		
D-6	30F	a																						JUNCTION STRUCTURE	101.33 Lt "A-2" 30+16.41
D-6	30F	b		W	101																		39.7	24" RCP	
D-6	30F	c																						CONCRETE COLLAR	
D-6	30F	d				34	5																	VERTICAL DROP CONNECTOR SYSTEM	
D-6	30F	e																						CONCRETE ENCASEMENT	
D-6	30F	f																						G1 INLET	4.00 Lt "A-2" 30+19.68
D-6	31	a																						EARTHEN SWALE	
D-6	31	b																						GCP INLET	158.80 Rt "A" 448+17.31
D-6	31	c		W	86																		3.3	24" RCP	
D-6	31	d																						GCP INLET	163.72 Rt "A" 449+13.36
D-6	31	e		W	69																		7.6	24" RCP	
D-6	31A	a										1.04	7.11											HMAOD	115.00' Rt "A" 439+72.50
D-6	32	a																						CONCRETE HEADWALL	36.80 Lt "C-3" 39+04.86
D-6	32	b																						CONCRETE CHANNEL	
D-6	32	c																						CONCRETE HEADWALL	89.72 Lt "C-3" 39+05.42
D-6	32	d																						6' x 2.5' RCB	
					256	34	5					1.04	7.1										50.6	SUB TOTAL	

(N) INFORMATION ONLY, NOT A SEPARATE BID ITEM

* FOR ADDITIONAL QUANTITIES, SEE SUMMARY OF QUANTITIES
** FOR ADDITIONAL QUANTITIES, SEE STAGE CONSTRUCTION QUANTITIES

DRAINAGE QUANTITIES
DQ-36

CALCULATED-DESIGNED BY: RASHOD GIBSON
CHECKED BY: BROOKE RIVERA
REVISED BY: DUC TRAN
DATE REVISED: 8/10/09
CONSULTANT FUNCTIONAL SUPERVISOR: ANDRZEJ NOWAK
STATE OF CALIFORNIA - DEPARTMENT OF TRANSPORTATION
Caltrans

LAST REVISION DATE PLOTTED => 03-FEB-2010
08-10-09 TIME PLOTTED => 10:32

BORDER LAST REVISED 8/1/2008
RELATIVE BORDER SCALE IS IN INCHES 0 1 2 3
USERNAME => trmikesl
DGN FILE => c07163id036.dgn
CU 12235
EA 071631

Dist	COUNTY	ROUTE	POST MILES TOTAL PROJECT	SHEET No.	TOTAL SHEETS
12	Ora	22,405, 605	R0.3/R0.9, 22.3/24.0,3.0/R1.6	494	1929

REGISTERED CIVIL ENGINEER — DATE 8/10/09

REGISTERED PROFESSIONAL ENGINEER — JENNIFER BROOKE RIVERA — No. C70332 — Exp. 09/30/10 — CIVIL — STATE OF CALIFORNIA

2-1-10
PLANS APPROVAL DATE

THE STATE OF CALIFORNIA OR ITS OFFICERS OR AGENTS SHALL NOT BE RESPONSIBLE FOR THE ACCURACY OR COMPLETENESS OF ELECTRONIC COPIES OF THIS PLAN SHEET.

AECOM
999 TOWN & COUNTRY RD
ORANGE, CA 92868

ORANGE COUNTY
TRANSPORTATION AUTHORITY
550 S. MAIN STREET
ORANGE, CA 92863-1584

DRAINAGE QUANTITIES

DRAINAGE PLAN SHEET No.	SYSTEM No.	UNIT	MINOR CONCRETE (MINOR STRUCTURE)	CLASS 1 CONCRETE (BIXBY CHANNEL)	STRUCTURAL CONCRETE (BOX CULVERT)	CONCRETE (DITCH LINING)	CLASS 3 AGGREGATE BASE	GRATED LINE DRAIN	(N) BIOSWALE	DITCH EXCAVATION	(N) BIOSTRIP	(N) GRATES			Misc IRON & STEEL **	BAR REINFORCING STEEL (CHANNEL)	BAR REINFORCING STEEL (BOX CULVERT)	(N) STRUCTURAL BACKFILL	12" CSP (0.079" THICK)	18" REINFORCED Conc PIPE	24" REINFORCED Conc PIPE	36" REINFORCED Conc PIPE	DESCRIPTION	STATION
												TYPE 24-12	TYPE 36R	COMBINATION CATCH BASIN										
			CY	CY	CY	CY	CY	LF	LF	CY	SF	EA	EA	EA	LB	LB	LB	CY	LF	LF	LF	LF		
D-6	32	e	2.1																				JUNCTION STRUCTURE	113.56 Lt "A" 448+89.07
D-6	32	f	0.4																				CONCRETE BULKHEAD	17.13 Lt "A" 448+87.44
D-6	32	g	0.4																				CONCRETE BULKHEAD	27.95 Rt "A" 448+88.29
D-6	32	h	0.4																				CONCRETE BULKHEAD	71.78 Rt "A" 448+90.21
D-6	32	i	2.7																				REMOVE HEADWALL	36.80 Lt "C-3" 39+04.86
D-6	32	j																					REMOVE CONCRETE CHANNEL	
D-6	32	k	2.7																				REMOVE HEADWALL	113.56 Lt "A" 448+89.07
D-6	32	l																					REMOVE 6′ x 2.5′ RCB	
D-6	32	m																					REMOVE 6′ x 2.5′ RCB	
D-6	32	n	2.7																				REMOVE HEADWALL	107.74 Rt "A" 448+92.12
D-6	33	a	0.3																				JUNCTION STRUCTURE	26.88 Lt "A" 448+90.55
D-6	33	b																			3		24" RCP	
D-6	33	c	0.8																				CONCRETE COLLAR	26.32 Lt "A" 448+96.85
D-6	33	d																			24		24" RCP	
D-6	33	e	2.4									2			634								GD-1 INLET	10.00 Lt "A" 449+16.47
			15.0									2			634						27		SUB TOTAL	

(N) INFORMATION ONLY, NOT A SEPARATE BID ITEM

* FOR ADDITIONAL QUANTITIES, SEE SUMMARY OF QUANTITIES
** FOR ADDITIONAL QUANTITIES, SEE STAGE CONSTRUCTION QUANTITIES

DRAINAGE QUANTITIES
DQ-37

REVISED BY: DUC TRAN — DATE REVISED: 8/10/09
CALCULATED-DESIGNED BY: RASHOD GIBSON
CHECKED BY: BROOKE RIVERA
CONSULTANT FUNCTIONAL SUPERVISOR: ANDRZEJ NOWAK
STATE OF CALIFORNIA - DEPARTMENT OF TRANSPORTATION — Caltrans

LAST REVISION: DATE PLOTTED => 03-FEB-2010 — TIME PLOTTED => 10:32
08-10-09

BORDER LAST REVISED 8/1/2008
RELATIVE BORDER SCALE IS IN INCHES 0 1 2 3
USERNAME => trmikesl
DGN FILE => c07163id037.dgn
CU 12235
EA 071631

Dist	COUNTY	ROUTE	POST MILES TOTAL PROJECT	SHEET No.	TOTAL SHEETS
12	Ora	22,405, 605	R0.3/R0.9, 22.3/24.0,3.0/R1.6	495	1929

REGISTERED CIVIL ENGINEER — DATE 12/22/09

2-1-10
PLANS APPROVAL DATE

REGISTERED PROFESSIONAL ENGINEER — JENNIFER BROOKE RIVERA — No. C70332 — Exp. 09/30/10 — CIVIL — STATE OF CALIFORNIA

THE STATE OF CALIFORNIA OR ITS OFFICERS OR AGENTS SHALL NOT BE RESPONSIBLE FOR THE ACCURACY OR COMPLETENESS OF ELECTRONIC COPIES OF THIS PLAN SHEET.

AECOM
999 TOWN & COUNTRY RD
ORANGE, CA 92868

ORANGE COUNTY
TRANSPORTATION AUTHORITY
550 S. MAIN STREET
ORANGE, CA 92863-1584

DRAINAGE QUANTITIES

DRAINAGE PLAN SHEET No.	SYSTEM No.	UNIT	48" REINFORCED Conc PIPE	(N) PIPE JOINT CLASSIFICATION	FIELD LEAKAGE TESTING	16" WELDED STEEL PIPE (0.375" WALL THICKNESS)	24" WELDED STEEL PIPE (0.375" WALL THICKNESS)	18" AFES	24" AFES	ROCK SLOPE PROTECTION FABRIC	ROCK SLOPE PROTECTION (FACING, METHOD B)	HOT MIX ASPHALT *	PLACE HOT MIX ASPHALT (Misc AREA)	REMOVE DRAINAGE FACILITY	(N) REMOVE ACOD	REMOVE CULVERT	REMOVE REINFORCED CONCRETE BOX CULVERT	REMOVE CONCRETE (HEADWALL)	REMOVE CONCRETE (DITCH)	REMOVE CONCRETE (CHANNEL)	(N) REMOVE EARTHEN SWALE	(N) HEIGHT OF INLET	(N) MAXIMUM COVER	DESCRIPTION	STATION
			LF		LF	LF	LF	EA	EA	SQYD	TON	TON	SQYD	EA	EA	LF	LF	CY	LF	CY	LF	LF	LF		
D-6	32	e																						JUNCTION STRUCTURE	113.56 Lt "A" 448+89.07
D-6	32	f																						CONCRETE BULKHEAD	17.13 Lt "A" 448+87.44
D-6	32	g																						CONCRETE BULKHEAD	27.95 Rt "A" 448+88.29
D-6	32	h																						CONCRETE BULKHEAD	71.78 Rt "A" 448+90.21
D-6	32	i																						REMOVE HEADWALL	36.80 Lt "C-3" 39+04.86
D-6	32	j																	96					REMOVE CONCRETE CHANNEL	
D-6	32	k																						REMOVE HEADWALL	113.56 Lt "A" 448+89.07
D-6	32	l															45							REMOVE 6′ × 2.5′ RCB	
D-6	32	m															35							REMOVE 6′ × 2.5′ RCB	
D-6	32	n																						REMOVE HEADWALL	107.74 Rt "A" 448+92.12
D-6	33	a																						JUNCTION STRUCTURE	26.88 Lt "A" 448+90.55
D-6	33	b		S																			7.6	24" RCP	
D-6	33	c																						CONCRETE COLLAR	26.32 Lt "A" 448+96.85
D-6	33	d		S																			6.9	24" RCP	
D-6	33	e																					5.4	GD-1 INLET	10.00 Lt "A" 449+16.47
																	80.0		96			5.4	14.5	SUB TOTAL	

(N) INFORMATION ONLY, NOT A SEPARATE BID ITEM

* FOR ADDITIONAL QUANTITIES, SEE SUMMARY OF QUANTITIES
** FOR ADDITIONAL QUANTITIES, SEE STAGE CONSTRUCTION QUANTITIES

DRAINAGE QUANTITIES
DQ-38

REVISED BY: DUC TRAN — DATE REVISED: 8/10/09
CALCULATED-DESIGNED BY: RASHOD GIBSON — CHECKED BY: BROOKE RIVERA
CONSULTANT FUNCTIONAL SUPERVISOR: ANDRZEJ NOWAK
STATE OF CALIFORNIA - DEPARTMENT OF TRANSPORTATION — Caltrans

LAST REVISION: DATE PLOTTED => 03-FEB-2010 — 08-10-09 — TIME PLOTTED => 10:32

BORDER LAST REVISED 8/1/2008 — RELATIVE BORDER SCALE IS IN INCHES 0 1 2 3 — USERNAME => trmikesl — DGN FILE => c07163id038.dgn — CU 12235 — EA 071631

Dist	COUNTY	ROUTE	POST MILES TOTAL PROJECT	SHEET No.	TOTAL SHEETS
12	Ora	22,405, 605	R0.3/R0.9, 22.3/24.0,3.0/R1.6	496	1929

REGISTERED CIVIL ENGINEER — 8/10/09 DATE

JENNIFER BROOKE RIVERA No. C70332 Exp. 09/30/10 CIVIL — REGISTERED PROFESSIONAL ENGINEER — STATE OF CALIFORNIA

2-1-10
PLANS APPROVAL DATE

THE STATE OF CALIFORNIA OR ITS OFFICERS OR AGENTS SHALL NOT BE RESPONSIBLE FOR THE ACCURACY OR COMPLETENESS OF ELECTRONIC COPIES OF THIS PLAN SHEET.

AECOM
999 TOWN & COUNTRY RD
ORANGE, CA 92868

ORANGE COUNTY
TRANSPORTATION AUTHORITY
550 S. MAIN STREET
ORANGE, CA 92863-1584

DRAINAGE QUANTITIES

DRAINAGE PLAN SHEET No.	SYSTEM No.	UNIT	MINOR CONCRETE (MINOR STRUCTURE)	CLASS 1 CONCRETE (BIXBY CHANNEL)	STRUCTURAL CONCRETE (BOX CULVERT)	CONCRETE (DITCH LINING)	CLASS 3 AGGREGATE BASE	GRATED LINE DRAIN	(N) BIOSWALE	DITCH EXCAVATION	(N) BIOSTRIP	(N) GRATES TYPE 24-12	GRATES TYPE 36R	GRATES COMBINATION CATCH BASIN	Misc IRON & STEEL **	BAR REINFORCING STEEL (CHANNEL)	BAR REINFORCING STEEL (BOX CULVERT)	(N) STRUCTURAL BACKFILL	12" CSP (0.079" THICK)	18" REINFORCED Conc PIPE	24" REINFORCED Conc PIPE	36" REINFORCED Conc PIPE	DESCRIPTION	STATION
			CY	CY	CY	CY	CY	LF	LF	CY	SF	EA	EA	EA	LB	LB	LB	CY	LF	LF	LF	LF		
D-6	33A	a	1.9									2			634								GD-1 INLET	4.96 Rt "A" 447+87.60
D-6	33A	b																			10		24" RCP	
D-6	33A	c	2.4																				CONCRETE ENCASEMENT	
D-6	33A	d	2.8									2			634								GD-1 INLET	9.72 Lt "A" 447+87.48
D-6	33A	e																			43		24" RCP	
D-6	33A	f	0.8																				CONCRETE COLLAR	26.64 Lt "A" 448+28.40
D-6	33A	g																			54		24" RCP	
D-6	33A	h	0.3																				JUNCTION STRUCTURE	26.94 Lt "A" 448+84.65
D-7	34	a	0.9																				CONCRETE COLLAR	115.11 Rt "A" 451+48.41
D-7	34	b																			21		24" RCP	
D-7	34	c	3.0																				CONCRETE ENCASEMENT	
D-7	34	d	0.3										1		236							3	GCP INLET	137.50 Rt "A" 451+47.85
D-7	34	e																			112		24" RCP	
D-7	34	f	1.2																				CONCRETE HEADWALL	148.87 Rt "A" 452+69.13
D-7	34	g				6.1				64.2													CONCRETE CHANNEL	
D-7	34	h							45	5.0													BIOSWALE	
D-7	34	i																					REMOVE CONCRETE CHANNEL	
D-7	34	j																					ROCK SLOPE PROTECTION FABRIC	
			13.7			6.1			45.0	69.2		4	1		1504						239	3	SUB TOTAL	

(N) INFORMATION ONLY, NOT A SEPARATE BID ITEM

* FOR ADDITIONAL QUANTITIES, SEE SUMMARY OF QUANTITIES
** FOR ADDITIONAL QUANTITIES, SEE STAGE CONSTRUCTION QUANTITIES

DRAINAGE QUANTITIES
DQ-39

REVISED BY: DUC TRAN — DATE REVISED: 8/10/09
CALCULATED-DESIGNED BY: RASHOD GIBSON
CHECKED BY: BROOKE RIVERA
CONSULTANT FUNCTIONAL SUPERVISOR: ANDRZEJ NOWAK

STATE OF CALIFORNIA - DEPARTMENT OF TRANSPORTATION
Caltrans

LAST REVISION DATE PLOTTED => 03-FEB-2010
08-10-09 TIME PLOTTED => 10:32

Dist	COUNTY	ROUTE	POST MILES TOTAL PROJECT	SHEET No.	TOTAL SHEETS
12	Ora	22,405, 605	R0.3/R0.9, 22.3/24.0,3.0/R1.6	497	1929

REGISTERED CIVIL ENGINEER — DATE 12/22/09

JENNIFER BROOKE RIVERA No. C70332 Exp. 09/30/10 CIVIL — REGISTERED PROFESSIONAL ENGINEER — STATE OF CALIFORNIA

2-1-10
PLANS APPROVAL DATE

THE STATE OF CALIFORNIA OR ITS OFFICERS OR AGENTS SHALL NOT BE RESPONSIBLE FOR THE ACCURACY OR COMPLETENESS OF ELECTRONIC COPIES OF THIS PLAN SHEET.

AECOM
999 TOWN & COUNTRY RD
ORANGE, CA 92868

ORANGE COUNTY
TRANSPORTATION AUTHORITY
550 S. MAIN STREET
ORANGE, CA 92863-1584

DRAINAGE QUANTITIES

DRAINAGE PLAN SHEET No.	SYSTEM No.	UNIT	48" REINFORCED Conc PIPE	(N) PIPE JOINT CLASSIFICATION	FIELD LEAKAGE TESTING	16" WELDED STEEL PIPE (0.375" WALL THICKNESS)	24" WELDED STEEL PIPE (0.375" WALL THICKNESS)	18" AFES	24" AFES	ROCK SLOPE PROTECTION FABRIC	ROCK SLOPE PROTECTION (FACING, METHOD B)	HOT MIX ASPHALT *	PLACE HOT MIX ASPHALT (Misc AREA)	REMOVE DRAINAGE FACILITY	(N) REMOVE ACOD	REMOVE CULVERT	REMOVE REINFORCED CONCRETE BOX CULVERT	REMOVE CONCRETE (HEADWALL)	REMOVE CONCRETE (DITCH)	REMOVE CONCRETE (CHANNEL)	(N) REMOVE EARTHEN SWALE	(N) HEIGHT OF INLET	(N) MAXIMUM COVER	DESCRIPTION	STATION
			LF		LF	LF	LF	EA	EA	SQYD	TON	TON	SQYD	EA	EA	LF	LF	CY	LF	CY	LF	LF	LF		
D-6	33A	a																				4.0		GD-1 INLET	4.96 Rt "A" 447+87.60
D-6	33A	b		S																			3.5	24" RCP	
D-6	33A	c																						CONCRETE ENCASEMENT	
D-6	33A	d																				6.6		GD-1 INLET	9.72 Lt "A" 447+87.48
D-6	33A	e		S																			6.2	24" RCP	
D-6	33A	f																						CONCRETE COLLAR	26.64 Lt "A" 448+28.40
D-6	33A	g		S																			7.5	24" RCP	
D-6	33A	h																						JUNCTION STRUCTURE	26.94 Lt "A" 448+84.65
D-7	34	a																						CONCRETE COLLAR	115.11 Rt "A" 451+48.41
D-7	34	b		S																			0.7	24" RCP	
D-7	34	c																						CONCRETE ENCASEMENT	
D-7	34	d																				2.9		GCP INLET	137.50 Rt "A" 451+47.85
D-7	34	e		S																			2.5	24" RCP	
D-7	34	f																						CONCRETE HEADWALL	148.87 Rt "A" 452+69.13
D-7	34	g																						CONCRETE CHANNEL	
D-7	34	h																						BIOSWALE	
D-7	34	i																		266				REMOVE CONCRETE CHANNEL	
D-7	34	j								15.0	4.25													ROCK SLOPE PROTECTION FABRIC	
										15.0	4.3									266		13.5	20.4	SUB TOTAL	

(N) INFORMATION ONLY, NOT A SEPARATE BID ITEM

* FOR ADDITIONAL QUANTITIES, SEE SUMMARY OF QUANTITIES
** FOR ADDITIONAL QUANTITIES, SEE STAGE CONSTRUCTION QUANTITIES

DRAINAGE QUANTITIES
DQ-40

REVISED BY: DUC TRAN — DATE REVISED: 8/10/09
CALCULATED-DESIGNED BY: RASHOD GIBSON
CHECKED BY: BROOKE RIVERA
CONSULTANT FUNCTIONAL SUPERVISOR: ANDRZEJ NOWAK
STATE OF CALIFORNIA - DEPARTMENT OF TRANSPORTATION — Caltrans

LAST REVISION DATE PLOTTED => 03-FEB-2010
08-10-09 TIME PLOTTED => 10:32

BORDER LAST REVISED 8/1/2008
RELATIVE BORDER SCALE IS IN INCHES 0 1 2 3
USERNAME => trmikesl
DGN FILE => c07163id040.dgn
CU 12235
EA 071631

Dist	COUNTY	ROUTE	POST MILES TOTAL PROJECT	SHEET No.	TOTAL SHEETS
12	Ora	22,405, 605	R0.3/R0.9, 22.3/24.0,3.0/R1.6	498	1929

8/10/09
REGISTERED CIVIL ENGINEER DATE

JENNIFER BROOKE RIVERA
No. C70332
Exp. 09/30/10
CIVIL
REGISTERED PROFESSIONAL ENGINEER
STATE OF CALIFORNIA

2-1-10
PLANS APPROVAL DATE

THE STATE OF CALIFORNIA OR ITS OFFICERS OR AGENTS SHALL NOT BE RESPONSIBLE FOR THE ACCURACY OR COMPLETENESS OF ELECTRONIC COPIES OF THIS PLAN SHEET.

AECOM
999 TOWN & COUNTRY RD
ORANGE, CA 92868

ORANGE COUNTY
TRANSPORTATION AUTHORITY
550 S. MAIN STREET
ORANGE, CA 92863-1584

DRAINAGE QUANTITIES

DRAINAGE PLAN SHEET No.	SYSTEM No.	UNIT	MINOR CONCRETE (MINOR STRUCTURE)	CLASS 1 CONCRETE (BIXBY CHANNEL)	STRUCTURAL CONCRETE (BOX CULVERT)	CONCRETE (DITCH LINING)	CLASS 3 AGGREGATE BASE	GRATED LINE DRAIN	(N) BIOSWALE	DITCH EXCAVATION	(N) BIOSTRIP	(N) GRATES TYPE 24-12	GRATES TYPE 36R	GRATES COMBINATION CATCH BASIN	Misc IRON & STEEL **	BAR REINFORCING STEEL (CHANNEL)	BAR REINFORCING STEEL (BOX CULVERT)	(N) STRUCTURAL BACKFILL	12" CSP (0.079" THICK)	18" REINFORCED Conc PIPE	24" REINFORCED Conc PIPE	36" REINFORCED Conc PIPE	DESCRIPTION	STATION
			CY	CY	CY	CY	CY	LF	LF	CY	SF	EA	EA	EA	LB	LB	LB	CY	LF	LF	LF	LF		
D-7	34A	a																					JUNCTION STRUCTURE	2.46 Lt "A" 451+52.17
D-7	34A	b																			52		24" RCP	
D-7	34A	c	2.5									2			634								GD-1 INLET	2.40 Lt "A" 442+06.85
D-7	34A	d																			44		24" RCP	
D-7	34A	e	2.3									2			634								GD-1 INLET	2.90 Lt "A" 442+55.00
D-7	34A	f																			42		24" RCP	
D-7	34A	g	2.3									2			634								GD-1 INLET	2.00 Lt "A" 443+02.00
D-7	34A	h																			24		24" RCP	
D-7	34A	i	0.8																				CONCRETE ENCASEMENT	
D-7	34A	j	2.6									2			634								GD-1 INLET	31.00 Lt "A" 443+02.00
D-7	35	a							40	8.9													BIOSWALE	
D-7	35	b				50				222.2													CONCRETE CHANNEL	
D-8	35	b				63				280.0													CONCRETE CHANNEL	
D-8	35	c																					REMOVE CONCRETE CHANNEL	
D-7	35	d																					REMOVE 24" CMP	
D-7	35	e																					REMOVE CONCRETE CHANNEL	
D-7	35	f																					REMOVE ACOD	88.84 Rt "A" 455+73.74
D-7	35	g																					ROCK SLOPE PROTECTION FABRIC	
			10.5			112.4			40.0	511.1		8.0			2536.0						162.5		SUB TOTAL	

(N) INFORMATION ONLY, NOT A SEPARATE BID ITEM

* FOR ADDITIONAL QUANTITIES, SEE SUMMARY OF QUANTITIES
** FOR ADDITIONAL QUANTITIES, SEE STAGE CONSTRUCTION QUANTITIES

DRAINAGE QUANTITIES
DQ-41

REVISED BY	DUC TRAN
DATE REVISED	8/10/09
CALCULATED-DESIGNED BY	RASHOD GIBSON
CHECKED BY	BROOKE RIVERA
CONSULTANT FUNCTIONAL SUPERVISOR	ANDRZEJ NOWAK

STATE OF CALIFORNIA - DEPARTMENT OF TRANSPORTATION
Caltrans

LAST REVISION DATE PLOTTED => 03-FEB-2010
08-10-09 TIME PLOTTED => 10:32

Dist	COUNTY	ROUTE	POST MILES TOTAL PROJECT	SHEET No.	TOTAL SHEETS
12	Ora	22,405, 605	R0.3/R0.9, 22.3/24.0,3.0/R1.6	499	1929

REGISTERED CIVIL ENGINEER — DATE 12/22/09

2-1-10
PLANS APPROVAL DATE

REGISTERED PROFESSIONAL ENGINEER — JENNIFER BROOKE RIVERA — No. C70332 — Exp. 09/30/10 — CIVIL — STATE OF CALIFORNIA

THE STATE OF CALIFORNIA OR ITS OFFICERS OR AGENTS SHALL NOT BE RESPONSIBLE FOR THE ACCURACY OR COMPLETENESS OF ELECTRONIC COPIES OF THIS PLAN SHEET.

AECOM
999 TOWN & COUNTRY RD
ORANGE, CA 92868

ORANGE COUNTY
TRANSPORTATION AUTHORITY
550 S. MAIN STREET
ORANGE, CA 92863-1584

DRAINAGE QUANTITIES

DRAINAGE PLAN SHEET No.	SYSTEM No.	UNIT	48" REINFORCED Conc PIPE	(N) PIPE JOINT CLASSIFICATION	FIELD LEAKAGE TESTING	16" WELDED STEEL PIPE (0.375" WALL THICKNESS)	24" WELDED STEEL PIPE (0.375" WALL THICKNESS)	18" AFES	24" AFES	ROCK SLOPE PROTECTION FABRIC	ROCK SLOPE PROTECTION (FACING, METHOD B)	HOT MIX ASPHALT *	PLACE HOT MIX ASPHALT (Misc AREA)	REMOVE DRAINAGE FACILITY	(N) REMOVE ACOD	REMOVE CULVERT	REMOVE REINFORED CONCRETE BOX CULVERT	REMOVE CONCRETE (HEADWALL)	REMOVE CONCRETE (DITCH)	REMOVE CONCRETE (CHANNEL)	(N) REMOVE EARTHEN SWALE	(N) HEIGHT OF INLET	(N) MAXIMUM COVER	DESCRIPTION	STATION
			LF		LF	LF	LF	EA	EA	SQYD	TON	TON	SQYD	EA	EA	LF	LF	CY	LF	CY	LF	LF	LF		
D-7	34A	a																						JUNCTION STRUCTURE	2.46 Lt "A" 451+52.17
D-7	34A	b		S																			3.1	24" RCP	
D-7	34A	c																				5.6		GD-1 INLET	2.40 Lt "A" 442+06.85
D-7	34A	d		S																			3.4	24" RCP	
D-7	34A	e																				5.2		GD-1 INLET	2.90 Lt "A" 442+55.00
D-7	34A	f		S																			3.0	24" RCP	
D-7	34A	g																				5.1		GD-1 INLET	2.00 Lt "A" 443+02.00
D-7	34A	h		S																			4.3	24" RCP	
D-7	34A	i																						CONCRETE ENCASEMENT	
D-7	34A	j																				5.9		GD-1 INLET	31.00 Lt "A" 443+02.00
D-7	35	a																						BIOSWALE	
D-7	35	b																						CONCRETE CHANNEL	
D-8	35	b																						CONCRETE CHANNEL	
D-8	35	c																		370				REMOVE CONCRETE CHANNEL	
D-7	35	d														20								REMOVE 24" CMP	
D-7	35	e																		443				REMOVE CONCRETE CHANNEL	
D-7	35	f													1									REMOVE ACOD	88.84 Rt "A" 455+73.74
D-7	35	g								20.0	5.67													ROCK SLOPE PROTECTION FABRIC	
										20.0	5.7				1.0	20.0			813.0			21.8	13.8	SUB TOTAL	

(N) INFORMATION ONLY, NOT A SEPARATE BID ITEM

* FOR ADDITIONAL QUANTITIES, SEE SUMMARY OF QUANTITIES
** FOR ADDITIONAL QUANTITIES, SEE STAGE CONSTRUCTION QUANTITIES

DRAINAGE QUANTITIES
DQ-42

REVISED BY	DUC TRAN
DATE REVISED	8/10/09
CALCULATED-DESIGNED BY	RASHOD GIBSON
CHECKED BY	BROOKE RIVERA
CONSULTANT FUNCTIONAL SUPERVISOR	ANDRZEJ NOWAK

STATE OF CALIFORNIA - DEPARTMENT OF TRANSPORTATION

LAST REVISION DATE PLOTTED => 03-FEB-2010 08-10-09 TIME PLOTTED => 10:33

Dist	COUNTY	ROUTE	POST MILES TOTAL PROJECT	SHEET No.	TOTAL SHEETS
12	Ora	22,405, 605	R0.3/R0.9, 22.3/24.0,3.0/R1.6	500	1929

REGISTERED CIVIL ENGINEER — 8/10/09 DATE

2-1-10
PLANS APPROVAL DATE

REGISTERED PROFESSIONAL ENGINEER
JENNIFER BROOKE RIVERA
No. C70332
Exp. 09/30/10
CIVIL
STATE OF CALIFORNIA

THE STATE OF CALIFORNIA OR ITS OFFICERS OR AGENTS SHALL NOT BE RESPONSIBLE FOR THE ACCURACY OR COMPLETENESS OF ELECTRONIC COPIES OF THIS PLAN SHEET.

AECOM
999 TOWN & COUNTRY RD
ORANGE, CA 92868

ORANGE COUNTY
TRANSPORTATION AUTHORITY
550 S. MAIN STREET
ORANGE, CA 92863-1584

DRAINAGE QUANTITIES

DRAINAGE PLAN SHEET No.	SYSTEM No.	UNIT	MINOR CONCRETE (MINOR STRUCTURE)	CLASS 1 CONCRETE (BIXBY CHANNEL)	STRUCTURAL CONCRETE (BOX CULVERT)	CONCRETE (DITCH LINING)	CLASS 3 AGGREGATE BASE	GRATED LINE DRAIN	(N) BIOSWALE	DITCH EXCAVATION	(N) BIOSTRIP	(N) GRATES			Misc IRON & STEEL **	BAR REINFORCING STEEL (CHANNEL)	BAR REINFORCING STEEL (BOX CULVERT)	(N) STRUCTURAL BACKFILL	12" CSP (0.079" THICK)	18" REINFORCED Conc PIPE	24" REINFORCED Conc PIPE	36" REINFORCED Conc PIPE	DESCRIPTION	STATION
												TYPE 24-12	TYPE 36R	COMBINATION CATCH BASIN										
			CY	CY	CY	CY	CY	LF	LF	CY	SF	EA	EA	EA	LB	LB	LB	CY	LF	LF	LF	LF		
D-8	35A	a																					HOT MIX ASPHALT CONCRETE DRAIN	127.00 R† "A" 462+46.84
D-8	35A	b																					REMOVE ACOD	88.32 R† "A" 462+43.04
D-7	36	a	0.3																				JUNCTION STRUCTURE	26.65 R† "A" 454+01.33
D-7	36	b																			5		24" RCP	
D-7	36	c	3.2									2			634								GD-1 INLET	26.69 R† "A" 454+08.33
D-7	36	d																			2		24" RCP	
D-7	36	e	2.7									2			634								GD-1 INLET	26.64 R† "A" 454+15.21
D-7	37	a								70													EARTHEN SWALE	
D-7	37	b																					ROCK SLOPE PROTECTION FABRIC	
D-7	37	c	1.8																				BOX CULVERT WINGWALL	190.05 L† "A" 454+29.47
D-7	37	d			19.7																		4′ x 2′ RCB	
D-7	37	e	1.4																				JUNCTION STRUCTURE	125.97 L† "A" 453+99.81
D-7	37	f	4.2									2			634								GD-1 INLET	31.00 L† "A" 453+99.52
D-7	37	g	0.2																				CONCRETE BULKHEAD	105.29 R† "A" 453+99.05
D-7	37	h																					REMOVE HEADWALL	125.97 L† "A" 453+99.81
D-7	37	i																					REMOVE HEADWALL	105.29 R† "A" 453+99.05
D-7	37	j																					REMOVE DI	
			13.8		19.7					70.4		6			1902						7		SUB TOTAL	

(N) INFORMATION ONLY, NOT A SEPARATE BID ITEM

* FOR ADDITIONAL QUANTITIES, SEE SUMMARY OF QUANTITIES
** FOR ADDITIONAL QUANTITIES, SEE STAGE CONSTRUCTION QUANTITIES

DRAINAGE QUANTITIES
DQ-43

REVISED BY: DUC TRAN
DATE REVISED: 8/10/09
CALCULATED-DESIGNED BY: RASHOD GIBSON
CHECKED BY: BROOKE RIVERA
CONSULTANT FUNCTIONAL SUPERVISOR: ANDRZEJ NOWAK
STATE OF CALIFORNIA - DEPARTMENT OF TRANSPORTATION
Caltrans

LAST REVISION DATE PLOTTED => 03-FEB-2010
08-10-09 TIME PLOTTED => 10:33

BORDER LAST REVISED 8/1/2008
RELATIVE BORDER SCALE IS IN INCHES 0 1 2 3
USERNAME => trmikesl
DGN FILE => c07163id043.dgn
CU 12235
EA 071631